ORDER NO. VSD9204M501

Service Manual

Panasonic MII

Simplified

STUDIO VTR
AU-65H

STUDIO PLAYER
AU-63H

STUDIO PLAYER
AU-62H

Comparison Chart
Operating Instructions
Technical Descriptions
Electrical Adjustment Procedures
Block Diagrams
Schematic Diagrams
Printed Circuit Board Diagrams
Replacement Parts Lists

Please file and use this manual toghether with the service manual for Model No. AU-65, 63 and 62, Order No. VQS0264-1.

PAL

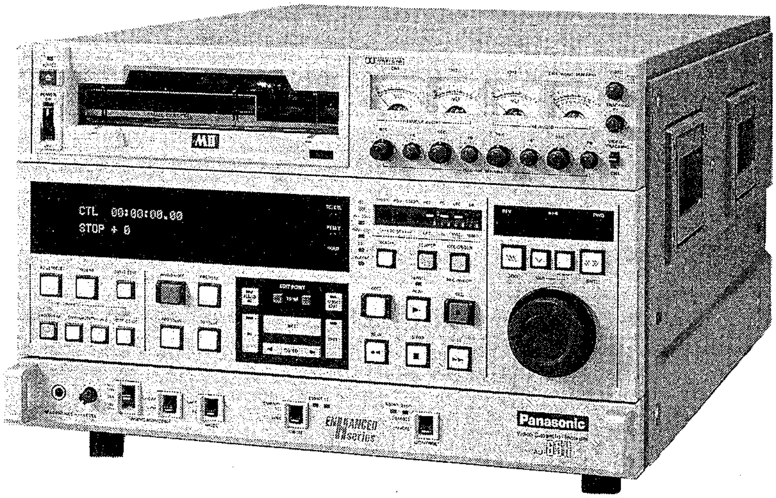

CTL 00:00:00.00
STOP + 0
MII
Panasonic
ENHANCED series

Panasonic

1. COMPARISON CHART

This chart is described different part from the basic model AU-65, AU-63 and AU-62 to the new model AU-65H, AU-63H and AU-62H.

Mechanical Replacement Parts

《AU-65HE/B》

(A).....Added, (C).....Changed, (D).....Deleted

Ref No.	AU-65-E/B Part No.	AU-65HE/B Part No.	Pcs/Set	Part Name & Description	Remarks
1	VYP2975	VYP4151	1	UPPER FRONT PANEL (1) UNIT	(C)FRONT PANEL ASSEMBLY
3	VXU0766	VXU0766	2 → 4	VR KNOB (B)	(C)FRONT PANEL ASSEMBLY
9	VSE0101	VSE0101	2 → 3	AUDIO METER	(C)FRONT PANEL ASSEMBLY
10	VSE0109	VSE0103	1	TRACKING METER	(C)FRONT PANEL ASSEMBLY
12	VGU2085	VGU3388	1	SWITCH KNOB	(C)FRONT PANEL ASSEMBLY
20	VMZ1160	VGP3137	1	FRONT BOARD COVER	(C)FRONT PANEL ASSEMBLY
23	—	VXU0769	0 → 1	TRACKING VR KNOB	(A)FRONT PANEL ASSEMBLY
31	VYP2977	VYP4047	1	CONTROL PANEL (1) UNIT	(C)FRONT PANEL ASSEMBLY
1	VGH2284	VGH3039	1	JACK NAME PLATE (UPPER)	(C)REAR JACK PANEL ASSEMBLY
15	VJS2614	VJS2525	1	XLR CONNECTOR (4 PCS)	(C)REAR JACK PANEL ASSEMBLY
17	VGH2551	VGH3045	1	JACK NAME PLATE (LOWER)	(C)REAR JACK PANEL ASSEMBLY
19	VMP2613	—	1 → 0	B BOARD COVER	(D)CHASSIS FRAME ASSEMBLY
23	VMP2608	VMP3676	1	CENTER FRAME	(C)CHASSIS FRAME ASSEMBLY
31	VGH2549	VGH3041	1	SUB FRONT PANEL	(C)CHASSIS FRAME ASSEMBLY
33	—	VMP2739	0 → 1	SENC & P IN P BOARD MOUNT ANGLE (BOTTOM)	(A)CHASSIS FRAME ASSEMBLY
60	—	VMP3668	0 → 1	W BOARD HOLD ANGLE	(A)CHASSIS FRAME ASSEMBLY
85	XTV3+6F	—	72 → 70	SCREW	(D)CHASSIS FRAME ASSEMBLY
100	—	VMP2738	0 → 1	SENC & P IN P HOLDER ANGLE	(A)CHASSIS FRAME ASSEMBLY
110	—	XTV3+8F	0 → 1	SCREW	(A)CHASSIS FRAME ASSEMBLY
111	—	VSC3486	0 → 1	SHIELD BOX	(A)CHASSIS FRAME ASSEMBLY
11	VJA0561	VJA0716	1	9P CABLE	(C)PACKING
12	VFK0600	—	1 → 0	EXTENSION BOARD (W)	(D)PACKING
13	VQT4017	—	1 → 0	OPERATING INSTRUCTIONS (ENGLISH)	(D)PACKING (FOR AU-65E/AU-65B)
13	VQT4137	—	1 → 0	OPERATING INSTRUCTIONS (GERMAN)	(D)PACKING (FOR AU-65E)
13	VQT4138	—	1 → 0	OPERATING INSTRUCTIONS (FRENCH)	(D)PACKING (FOR AU-65E)
13	VQT4139	—	1 → 0	OPERATING INSTRUCTIONS (SPANISH)	(D)PACKING (FOR AU-65E)
13	—	VQT4633	0 → 1	OPERATING INSTRUCTIONS (ENGLISH)	(A)PACKING (FOR AU-65HE/AU-65HB)
13	—	VQT4655	0 → 1	OPERATING INSTRUCTIONS (GERMAN)	(A)PACKING (FOR AU-65HE)
13	—	VQT4586	0 → 1	OPERATING INSTRUCTIONS (FRENCH)	(A)PACKING (FOR AU-65HE)
13	—	VQT4656	0 → 1	OPERATING INSTRUCTIONS (SPANISH)	(A)PACKING (FOR AU-65HE)

《AU-63HE/B》

(A).....Added, (C).....Changed, (D).....Deleted

Ref No.	AU-63-E/B Part No.	AU-63HE/B Part No.	Pcs/Set	Part Name & Description	Remarks
31	VYP3145	VYP4049	1	CONTROL PANEL (1) UNIT	(C)FRONT PANEL ASSEMBLY
1	VGH2389	VGH3088	1	JACK NAME PLATE (UPPER)	(C)REAR JACK PANEL ASSEMBLY
17	VGH2551	VGH3045	1	JACK NAME PLATE (LOWER)	(C)REAR JACK PANEL ASSEMBLY
19	VMP2613	—	1 → 0	B BOARD COVER	(D)CHASSIS FRAME ASSEMBLY
60	—	VMP3668	0 → 1	W BOARD HOLD ANGLE	(A)CHASSIS FRAME ASSEMBLY
110	—	XTV3+8F	0 → 1	SCREW	(A)CHASSIS FRAME ASSEMBLY
11	VJA0561	VJA0716	1	9P CABLE	(C)PACKING
12	VFK0600	—	1 → 0	EXTENSION BOARD (W)	(D)PACKING
13	VQT4018	—	1 → 0	OPERATING INSTRUCTIONS (ENGLISH)	(D)PACKING (FOR AU-63E/B, 62E/B)
13	VQT4134	—	1 → 0	OPERATING INSTRUCTIONS (GERMAN)	(D)PACKING (FOR AU-63E/62E)
13	VQT4135	—	1 → 0	OPERATING INSTRUCTIONS (FRENCH)	(D)PACKING (FOR AU-63E/62E)
13	VQT4136	—	1 → 0	OPERATING INSTRUCTIONS (SPANISH)	(D)PACKING (FOR AU-63E/62E)
13	—	VQT4641	0 → 1	OPERATING INSTRUCTIONS (ENGLISH)	(A)PACKING (FOR AU-63HE/B, 62HE/B)
13	—	VQT4642	0 → 1	OPERATING INSTRUCTIONS (GERMAN)	(A)PACKING (FOR AU-63HE/62HE)
13	—	VQT4587	0 → 1	OPERATING INSTRUCTIONS (FRENCH)	(A)PACKING (FOR AU-63HE/62HE)
13	—	VQT4658	0 → 1	OPERATING INSTRUCTIONS (SPANISH)	(A)PACKING (FOR AU-63HE/62HE)

《AU-62HE/B》

(A).....Added, (C).....Changed, (D).....Deleted

Ref No.	AU-62-E/B Part No.	AU-62HE/B Part No.	Pcs/Set	Part Name & Description	Remarks
31	VYP3136	VYP4048	1	CONTROL PANEL (1) UNIT	(C) FRONT PANEL ASSEMBLY
1	VGH2389	VGH3088	1	JACK NAME PLATE (UPPER)	(C) REAR JACK PANEL ASSEMBLY
17	VGH2551	VGH3045	1	JACK NAME PLATE (LOWER)	(C) REAR JACK PANEL ASSEMBLY
19	VMP2613	————	1 → 0	B BOARD COVER	(D) CHASSIS FRAME ASSEMBLY
60	————	VMP3668	0 → 1	W BOARD HOLD ANGLE	(A) CHASSIS FRAME ASSEMBLY
110	————	XTV3+8F	0 → 1	SCREW	(A) CHASSIS FRAME ASSEMBLY
11	VJA0561	VJA0716	1	9P CABLE	(C) PACKING
12	VFK0600	————	1 → 0	EXTENSION BOARD (W)	(D) PACKING
13	VQT4018	————	1 → 0	OPERATING INSTRUCTIONS (ENGLISH)	(D) PACKING (FOR AU-63E/B, 62E/B)
13	VQT4134	————	1 → 0	OPERATING INSTRUCTIONS (GERMAN)	(D) PACKING (FOR AU-63E/62E)
13	VQT4135	————	1 → 0	OPERATING INSTRUCTIONS (FRENCH)	(D) PACKING (FOR AU-63E/62E)
13	VQT4136	————	1 → 0	OPERATING INSTRUCTIONS (SPANISH)	(D) PACKING (FOR AU-63E/62E)
13	————	VQT4641	0 → 1	OPERATING INSTRUCTIONS (ENGLISH)	(A) PACKING (FOR AU-63HE/B, 62HE/B)
13	————	VQT4642	0 → 1	OPERATING INSTRUCTIONS (GERMAN)	(A) PACKING (FOR AU-63HE/62HE)
13	————	VQT4587	0 → 1	OPERATING INSTRUCTIONS (FRENCH)	(A) PACKING (FOR AU-63HE/62HE)
13	————	VQT4658	0 → 1	OPERATING INSTRUCTIONS (SPANISH)	(A) PACKING (FOR AU-63HE/62HE)

Electrical Replacement Parts

《AU-65HE/B》

(A).....Added, (C).....Changed, (D).....Deleted

Ref No.	AU-65-E/B Part No.	AU-65HE/B Part No.	Pcs/Set	Part Name & Description	Remarks
	VEP80548A	VEP80765A	1	W0 MOTHER 1 P.C.B.	(C)
	VEP88062C	VEP88091C	1	W1 TBC & SYNC GEN P.C.B.	(C)
	VEP88063C	VEP88063M	1	W2 ENCODER P.C.B.	(C)
	VEP83099B	VEP83173A	1	W4 DECODER P.C.B.	(C)
	VEP84095D	VEP84095K	1	W6 AUDIO P.C.B.	(C)
	VEP80549A	VEP80549H	1	B0 MOTHER 2 P.C.B.	(C)
	VEP86088E	VEP86121D	1	B1 SYSTEM CONTROL P.C.B.	(C)
	VEP84094A	VEP84094G	1	AUDIO I/O P.C.B.	(C)
	VEP80631A	VEP80631D	1	FRONT INTERFACE P.C.B.	(C)
	VEP86050D	VEP86107B	1	FRONT PANEL A P.C.B.	(C)
	VEP66022A	VEP86108D	1	FRONT PANEL B P.C.B.	(C)
	VEP86048G	————	1 → 0	FRONT PANEL C P.C.B.	(D)
	————	VEP80083B	0 → 1	METER CHANGE SW P.C.B.	(A)
	VEP80333B	VEP80333C	1	METHER LAMP P.C.B.	(C)
	————	VEP83170B	0 → 1	SENC & P IN P P.C.B.	(A)
	VEP83097C	VEP83174C	1	VIDEO I/O P.C.B.	(C)
※1	————	VEP86089C	0 → 1	B2 TCG/TCR P.C.B.	(A)

《AU-63HE/B》

(A).....Added, (C).....Changed, (D).....Deleted

Ref No.	AU-63-E/B Part No.	AU-63HE/B Part No.	Pcs/Set	Part Name & Description	Remarks
	VEP80548D	VEP80765C	1	W0 MOTHER 1 P.C.B.	(C)
	VEP88062C	VEP88091C	1	W1 TBC & SYNC GEN P.C.B.	(C)
	VEP88063D	VEP88063N	1	W2 ENCODER P.C.B.	(C)
	VEP80549B	VEP80549K	1	B0 MOTHER 2 P.C.B.	(C)
	VEP86088F	VEP86121F	1	B1 SYSTEM CONTROL P.C.B.	(C)
	VEP86076D	VEP86076F	1	FRONT PANEL B P.C.B.	(C)
	VEP83097B	VEP83174B	1	VIDEO I/O P.C.B.	(C)
※1	————	VEP86089C	0 → 1	B2 TCG/TCR P.C.B.	(A)

《AU-62HE/B》

(A).....Added, (C).....Changed, (D).....Deleted

Ref No.	AU-62-E/B Part No.	AU-62HE/B Part No.	Pcs/Set	Part Name & Description	Remarks
	VEP80548C	VFP80765B	1	W0 MOTHER 1 P.C.B.	(C)
	VEP88062C	VEP88091C	1	W1 TBC & SYNC GEN P.C.B.	(C)
	VEP88063C	VEP88063Q	1	W2 ENCODER P.C.B.	(C)
	VEP80549A	VEP80549J	1	B0 MOTHER 2 P.C.B.	(C)
	VEP86088M	VEP86121E	1	B1 SYSTEM CONTROL P.C.B.	(C)
	VEP86076D	VEP86076F	1	FRONT PANEL B P.C.B.	(C)
	VEP83097B	VEP83174B	1	VIDEO I/O P.C.B.	(C)
※1	————	VEP86089C	0 → 1	B2 TCG/TCR P.C.B.	(A)

※1. The AU-62H has been installed with a Time code generator/reader (B2 Board) in standard accessory. The B2 Time code generator/reader (VEP86089C) is common to AU-F65 (Optional Time code generator/reader). Therefore please refer to the descriptions which are shown in AU-F65 Service Manual(VQS0264-1).

CONTENTS

FEATURES 1

SPECIFICATIONS ON AU-65H 3

SPECIFICATIONS ON AU-63H/62H 6

FRONT PANEL 8

REAR PANEL 11

FRONT SUB-PANEL 13

B1 SYSTEM CONTROL BOARD 14

B2 TCG/TCR BOARD 14

PRESET PANEL 15

CIRCUIT BOARDS 15

SET-UP MENUS (CONT.) 17

OPERATION METHOD OF DIAL MENU FUNCTIONS 18

SET-UP MENUS 19

P IN P FUNCTION ON AU-65H 20

SET-UP MENUS (CONT.) 21

SET-UP MENUS (CONT.) 22

ERROR MESSAGES ON AU-65H 23

ERROR MESSAGES ON AU-63H/62H 23

HEAD CLEANING 24

HANDLING PRECAUTIONS 24

RACK MOUNTING 25

INNER SWITCH SETTING(INITIAL MODE) 26

1. Features

High quality pictures
The MII series VTR developed for production/broadcast purposes ensures high quality pictures, comparable to those of 1" tape, by using ½" metal tape.

Extended recording time (AU-65H)
A recording of up to 95 min. is possible, using ½" metal tape. A small, 20-minute cassette can also be used without an adaptor.

Built-in 3-dimensional digital TBC
The unit contains a 3-dimensional digital TBC equipped with field memory so that stable playback pictures with minimal jitter can be obtained.

Freeze function
The adoption of 3-dimensional digital TBC made it possible to view noise-free still pictures (freeze frame).

P IN P (picture-in-picture) function (AU-65H)
This function enables a viewer to monitor playback signals and input signals on the same screen at the same time.

Color framing
This unit's ability to control color framing in a 4-field sequence assures optimum picture quality in composite signal editing, recording and playback. Sub-carrier phase can be adjusted in relation to the input reference signal. CF, REF and INPUT SCH LED indicators are provided to indicate their functions.

Editing functions (AU-65H)
The unit features auto/manual editing in assemble and insert modes (with two units). Individual/combination editing is possible in VIDEO•FM, AUDIO CH1/CH2, and TIME CODE modes. Time code editing can also be performed.

Variable memory editing*(AU-63H and AU-65H combination)
In the variable mode, the operating conditions (tape direction and speed change) within the range extending from normal speed in reverse (−1×) to twice normal speed forward (2×) can be entered and played back.

*Be sure that this unit does not use an Auto Tracking Control, in order to avoid creating noise on the screen. This function may be convenient, however, when the unit is used as the recorder VTR and controls the player VTR having the Auto Tracking.

Audio split editing (AU-65H)
It is possible to enter the audio edit point separate from video, and audio edit can be individually performed with its edit point deflected from the video edit point.

Setting of editing points (AU-65H)
Editing points can be readily set by the shuttle, jog and variable functions. Tape travels at speeds ranging from still to +/−16× (setting available to 32×) in the shuttle mode, −1× to +2× in the jog mode, and −1× to +2× in the variable mode.

Tape speed override (TSO)
This function enables the tape speed to be manually adjusted in 1% increments up to 15% faster or slower than the normal playback speed.
Tape speed override is presettable from the internal switch.

Amorphous heads
This unit is equipped with amorphous video heads designed to match the magnetic characteristics of the metal tape used by MII system VTRs. Together, they greatly improve high frequency response and decrease the eddy current loss.

4-channel audio*
The unit's audio is a 4 channel design with two channels of linear audio and two channels of high quality FM sound. Audio Mixing Output connector serves mixed sound of CH1 or CH2 audio and CH3 or CH4 audio.
The Dolby* C Noise Reduction System is provided for the linear channels.

Built-in time code generator/reader (TCG/TCR)
This unit comes with a time code generator and time code reader.

Setup operation viewing the display menu
Before operating the VTR, you can set up the unit viewing the display menu on the TV Monitor.

*Dolby noise reduction manufactured under license from Dolby Laboratories Licensing Corporation.
*"DOLBY" and the double-D symbol ꓷD are trademarks of Dolby Laboratories Licensing Corporation.

Large character display
The display is 32 characters by 2 lines. Information is displayed concerning the status of the VTR such as, tape time, editing data, speed data and error messages.

Shuttle search at up to 32 times normal speed plus jog search
The shuttle mode allows high-speed access at a maximum of 16 times (setting available to 32 times) normal speed in both forward and reverse direction. The jog mode allows speed change from −1× to 2× times normal speed. The operation conditions are displayed in large size characters on the display for enhanced operation convenience.

Machine-to-machine synchronization and sync roll
This unit provides easy synchronization between two VTRs. When used with the optional Editing Controller (AG-A800), this bridge-through connection allows sync roll with simple connections.

Automatic standard/non-standard selection (AU-65H)
This unit automatically detects whether the input signal is RS-170A standard signal or non-standard.

Tape remaining and lap time indication
Tape remaining and edit duration time are indicated by digit, making it easy to see how much tape remains and to check the duration time of the IN/OUT point.

Encoder remote
The built-in encoder is controllable using the encoder remote connector (15P), provided on the rear panel.

Serial (9P) remote
This unit is equipped with serial (9P) remote interface. When editing with two VTR units, the player can be remotely controlled from the recorder using the serial 9P cable connection.

Parallel (50P) remote
When the optional parallel (50P) remote connector is used, remote control can be performed from a distance by parallel remote mode.

Superimpose
The data in a tape position and the VTR operation mode can be imposed on the television screen.

Component input/output connectors
(Input connector : AU-65H)
Component input/output connectors are provided for interface with other equipment at the component signal level.

YC input and output connectors (for wide screen)
(Input connector : AU-65H)
YC input and output connectors have been provided to enable interfacing with other equipment using the YC signals.
There is also a function which automatically identifies whether the video signals for a regular NTSC size screen (aspect ratio of 3:4) or video signals for a wide size screen (aspect ratio of 9:16) are input to, or output from, these connectors.

Recorder inhibit (AU-65H)
Individual record inhibits are provided for Video, Linear Audio and Time Code. With the switches ON, both recording and editing are inhibited.

Rack mount
The AU-65H/63H/62H can be mounted in a standard EIA 19″ rack.

Specifications on AU-65H

Power Supply: 220–240 V AC, 50–60 Hz
Power Consumption: 180 W

Recording System: MⅡ format, 4 rotary heads, 2-track helical scanning
Tape Speed: 66.295 mm/sec
Tape: 1/2-inch metal particle tape
Recording Time: 97 minutes (with AU-MPL90 tape)
FF/REW Time: Less than 3 minutes (with AU-MPL60 tape)
Operating Temperature: 5°C to 40°C
Operating Humidity: Under 80%
Dimensions (W×H×D): 444×291×574 mm
Weight: 34 kg

VIDEO

Television Format: PAL TV system; 625 lines, 50 fields
Modulation System: Y; Frequency modulation
C; Time compressed multiplexing, frequency modulation (PB, PR)
Bandwidth: Y; 25 Hz to 5.0 MHz (+1/−2 dB)
5.5 MHz (−3.5 dB)
C (PB, PR); 25 Hz to 1.8 MHz (+1/−2 dB)
2.0 MHz (−3.5 dB)
S/N Ratio: Y; Better than 47 dB (200 kHz to 5 MHz)
C (PB, PR); Better than 48 dB
C (AM); Better than 48 dB (1 kHz to 500 kHz)
C (PM); Better than 50 dB (1 kHz to 500 kHz)
K Factor: 2 T; Less than 2%
5 T; Less than 3%
Y/C Delay: Less than 20ns
Linearity: Less than 3%

AUDIO

Linear (CH1/CH2)
Frequency Response: 50 Hz to 15 kHz (+2/−3 dB)
S/N Ratio: Better than 56 dB (Dolby NR OFF) (at 3% distortion)
Distortion: Less than 1.0% at 1 kHz standard input level
Wow and flutter: Less than 0.1% (DIN WTD)
Erase: Less than −65 dB at 1 kHz

FM (CH3/CH4)
Frequency Response: 20 Hz to 20 kHz (+1/−2 dB)
Dynamic Range: More than 85 dB (A WTD)
Distortion: Less than 0.5% at 1 kHz standard input level
Crosstalk: Less than −65 dB at 1 kHz standard input level

VIDEO INPUT

VIDEO IN:	BNC×2, loop through with 75Ω ON/OFF switch, 1.0 Vp-p	
REF VIDEO IN:	BNC×2, loop through with 75Ω ON/OFF switch, 1.0 Vp-p	
COMPONENT IN:	BNC×3	
	Y;	1.0 Vp-p, 75Ω
	PB;	0.7 Vp-p, 75Ω
	PR;	0.7 Vp-p, 75Ω
YC (S1-VIDEO) IN:	S1-VIDEO (4P)×1	
	Y;	1.0 Vp-p, 75Ω
	C;	0.3 Vp-p (burst level), 75Ω
	(100% colour bars, 0% setup)	

VIDEO OUTPUT

VIDEO OUT:	BNC×3	
	OUT1;	SYNC ON/OFF
	OUT2;	COMPOSITE OUT
	OUT3;	TC superimpose & P IN P ON/OFF
	Each output;	1.0 Vp-p, 75Ω
COMPONENT OUT:	BNC×3	
	Y;	1.0 Vp-p, 75Ω
	PB;	0.7 Vp-p, 75Ω
	PR;	0.7 Vp-p, 75Ω
YC (S1-VIDEO) OUT:	S1-VIDEO (4P)×1	
	Y;	1.0 Vp-p, 75Ω
	C;	0.3 Vp-p (burst level), 75Ω
	(100% colour bars, 0% setup)	

AUDIO INPUT

AUDIO IN:	XLR 3P×4, CH1/CH2 (linear), CH3/CH4 (FM), −20/0/+4 dBu More than 10 kΩ/600Ω, balanced
TIME CODE IN:	BNC×1, 0.5 V to 8 Vp-p, more than 10 kΩ, unbalanced

AUDIO OUTPUT

AUDIO OUT:	XLR 3P×4, CH1/CH2 (linear), CH3/CH4 (FM), −20/0/+4 dBu Less than 50Ω, balanced
TIME CODE OUT:	BNC×1, 2.2 Vp-p, less than 50Ω, unbalanced
MONITOR OUT:	XLR 3P×1 (MIX), +0 dBu, less than 50Ω, balanced
HEADPHONES OUT:	6.3 mm stereo jack, −20 dBu to −∞ (variable), 8Ω

REMOTE CONNECTORS

ENCODER REMOTE: 15P×1
REMOTE 2: 9P×2, RS-422A serial remote

STANDARD ACCESSORIES

Power cord
Serial 9-pin cord

OPTIONAL ACCESSORIES

REMOTE 1 (parallel remote) connector: AU-MK25

Weight and dimensions shown are approximate.
Specifications are subject to change without notice.

*Dolby noise reduction manufactured under license from Dolby Laboratories Licensing Corporation.

**"DOLBY" and the double-D symbol □□ are trademarks of Dolby Laboratories Licensing Corporation.

Specifications on AU-63H/62H

GENERAL

Power supply:	220–240 V AC, 50–60 Hz
Power consumption:	AU-63H; 140W / AU-62H; 135W

▨▨▨ is the safety information.

Playback system :	MⅡ format, 4 rotary heads, 2-track helical scanning system
Tape :	1/2" Metal Particle (MP) tape
Tape speed :	66.295 mm/sec
Playback time :	97 minutes (using AU-M90L tape)
FF/REW time :	Max. 3 minutes (using AU-M60L tape)
Operating temperature range :	5°C–40°C
Operating humidity :	Less than 80%
Dimensions :	444 (W)×291 (H)×574 (D) mm
Weight :	33 kg

VIDEO

Television Format:	PAL with 625 lines, 50 fields	
Modulation system:	Y;	Frequency modulation
	C;	Time base compression time division Frequency modulation (P_B, P_R)
Bandwidth :	Y;	25 Hz to 5.0 MHz (+1.0/−2 dB) 5.5 MHz (−3.5 dB)
	P_B, P_R;	25 Hz to 1.8 MHz (+1.0/−2 dB) 2.0 MHz (−3.5 dB)
S/N ratio :	Y (Component);	Better than 46 dB (AU-63)/47 dB (AU-62) (200 kHz to 5 MHz, SC trap OFF)
	C (P_B, P_R);	Better than 48 dB (1.6 MHz LPF)
	C (AM, PM);	48 dB (AM)/50 dB (PM) (1 kHz to 500 kHz)
K factor :	Less than 2%	
Y/C delay :	Less than 20ns	

AUDIO

Linear (CH1/CH2)

Frequency response :	50 Hz to 15 kHz (+2.0/−3 dB)
S/N ratio (3% distortion) :	Better than 56 dB (Dolby NR OFF)
Distortion :	Less than 1% (1 kHz standard signal)
Wow/flutter :	0.1% (DIN WTD)

FM (CH3/CH4)

Frequency response :	20 Hz to 20 kHz (+1/−2 dB)
Dynamic range :	More than 80 dB
Distortion :	Less than 0.5% (1 kHz standard signal)
Crosstalk :	Less than −65 dB (1 kHz standard signal)

VIDEO IN connectors

REF VIDEO IN :	BNC×2, loop through 1.0 Vp-p ±0.3 Vp-p, 75Ω ON/OFF	

VIDEO OUT connectors

VIDEO OUT:	BNC×3	
	OUT1 ;	SYNC ON/OFF
	OUT2 ;	COMPOSITE OUT
	OUT3 ;	TC superimposing ON/OFF
	1.0 Vp-p ±0.05 Vp-p, 75Ω for all outputs	
COMPONENT OUT:	BNC×3	
	Y ;	1.0 Vp-p, 75Ω
	P_B;	0.7 Vp-p, 75Ω
	P_R ;	0.7 Vp-p, 75Ω
YC (S1 VIDEO) OUT:	S1 VIDEO (4P)×1	
	Y;	1.0Vp-p 75Ω
	C;	0.3 Vp-p (Burst Level) 75Ω
	(100% colour bars, 0% set up)	

AUDIO OUT connectors

AUDIO OUT:	XLR 3P×4 CH1/CH2 (linear), CH3/CH4 (FM) −20/0/+4 dBu selectable, less than 50Ω balanced
TIME CODE OUT:	BNC×1 2.2 Vp-p, less than 50Ω unbalanced
MONITOR OUT:	XLR 3P×1 (MIX) 0 dBu, less than 50Ω balanced
HEADPHONES OUT:	1/4" phone stereo jack −20 dBu to −∞ (variable), 8Ω

Remote connectors

ENCODER REMOTE:	15P×1
REMOTE 2:	9P×1 RS-422A serial remote
(REMOTE 1):	50P (option)×1 parallel remote

Standard accessories

Power cord:	1
Serial 9-pin cord:	1

Optional accessories

Parallel remote connector:	AU-MK25

Wheight and dimensions shown are approximate.
Specifications are subject to change without notice.

Dolby noise reduction manufactured under license from Dolby Laboratories Licensing Corporation.
"DOLBY" and the double-D symbol DD are trademarks of Dolby Laboratories Licensing Corporation.

Front Panel

(AU-65H)

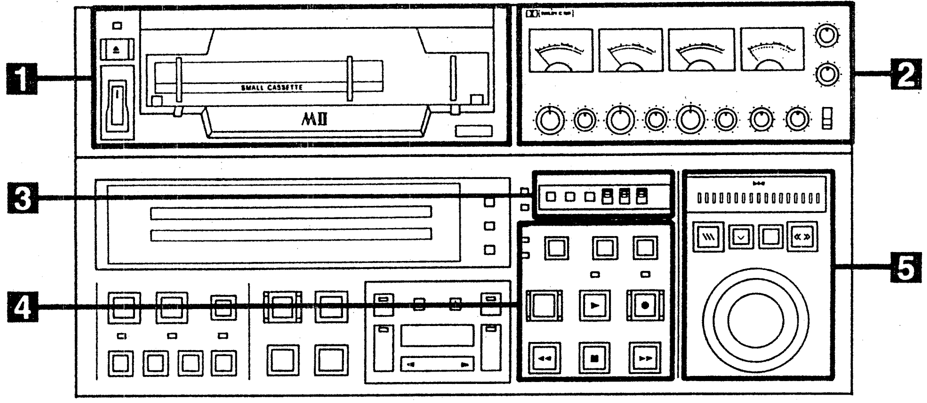
1
2
3
4
5
SMALL CASSETTE
MII

(AU-65H)

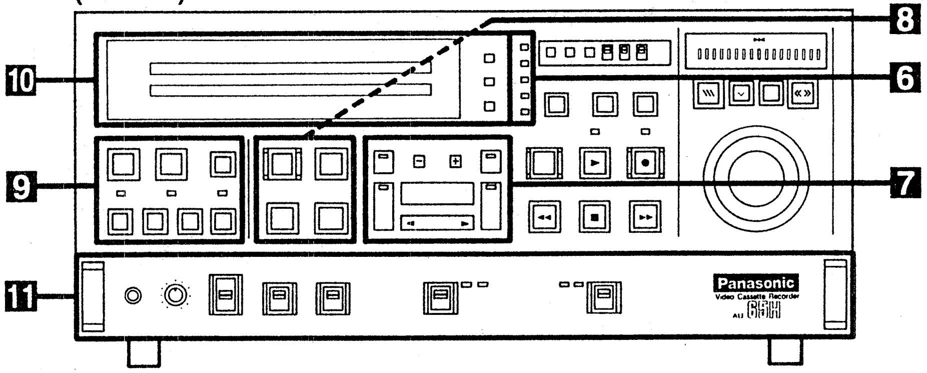
8
10
6
9
7
11
Panasonic
Video Cassette Recorder
AU-65H

(AU-63H)

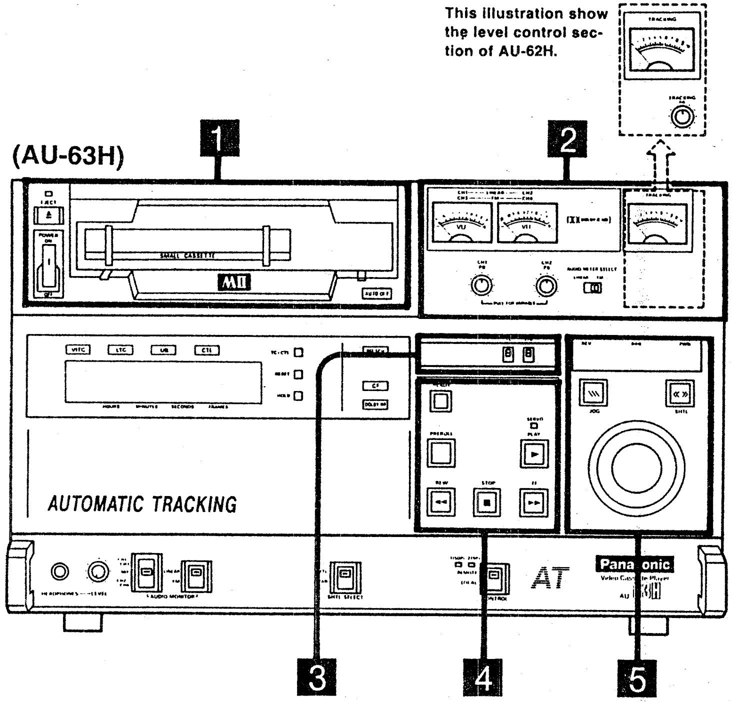
This illustration show the level control section of AU-62H.
1
2
3
4
5
TRACKING
MII
AUTOMATIC TRACKING
AT
Panasonic

The above illustration shows the AU-63H as seen from the front.

(AU-63H)

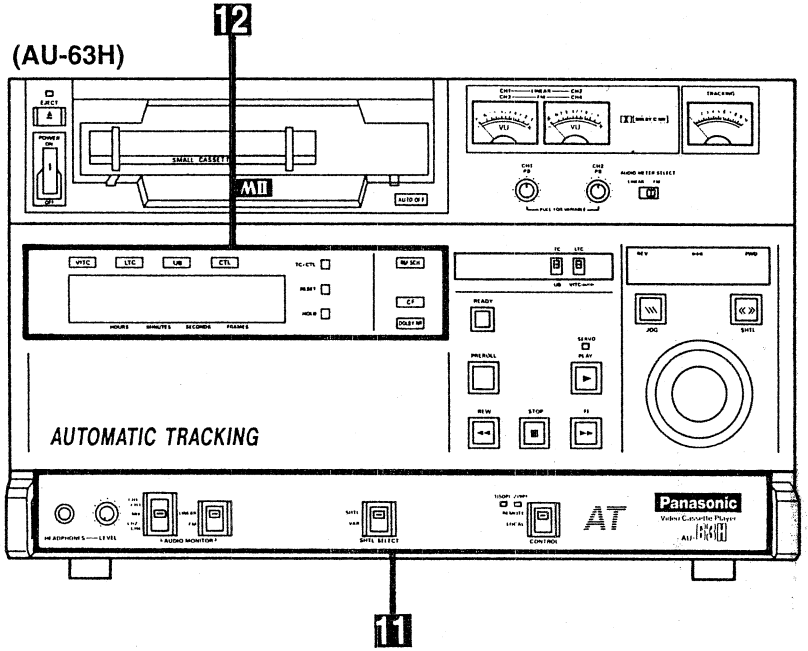
12
11
TRACKING
SMALL CASSETTE
MII
VU
READY
PREROLL
SERVO
PLAY
REW
STOP
FF
JOG
SHTL
AUTOMATIC TRACKING
AT
Panasonic
Video Cassette Player
AU-63H

1 Power, cassette area

POWER Switch:	Turns on the mains supply.
EJECT Button:	Ejects the tape.
EJECT Lamp:	Lights when a tape is ejected.
Cassette Holder:	This is where the 1/2-inch metal particle tape is inserted.
AUTO OFF Lamp:	This lights when there is something wrong with the unit. While it is lit, only the unit's EJECT button is functional.

Power Supply Protection Function
The unit is equipped with a protection circuit to guard it against excess current or voltage, and against excessively low voltage. If the protection circuit is triggered by some abnormality, the unit's power is turned OFF automatically. Make sure to investigate the cause of the problem, then the unit's operation can be restored to normal again by switching the power ON.

2 Level control area on AU-65H

LINEAR AUDIO CH1/CH2 Meters:	Displays the linear audio (CH1/2) level.
FM AUDIO CH3 Meter:	Displays the FM audio (CH3) level.
CH4/VIDEO. TRACKING Meter:	Displays the FM audio (CH4) level and the video level or the tracking level.
VIDEO Level Control:	Adjusts the composite video signal level.
TRACKING Control:	Adjusts the tracking.
VIDEO. TRACKING/CH4 Switch:	Switches between the VIDEO. TRACKING and CH4 meter indications.
VIDEO TRACKING;	Set to this position when adjusting the composition video signal level during recording, or when adjusting the tracking during playback.
CH4;	Set to this position when adjusting FM AUDIO CH4.
Audio Level Control:	Pull out and turn to adjust the audio level. Push in to record or play back at the optimum level (preset level).

Level control section On AU-63H / 62H

Audio level VU meters:	For audio (linear/FM) level display.
AUDIO METER SELECT switch:	Selects meter (linear/FM) display.
Audio level controls:	Pull out the knobs to adjust the audio level. Then push them back into place for playback at the optimum level (preset level).
TRACKING meter:	For tracking display.
***TRACKING control:**	Adjusts tracking (AU-62H only).

3 Time code setting area on AU-65H

SHIFT Button:	Shifts the flashing part of the time code display.
ADJ Button:	This changes the value of the flashing part.
START Button:	Press this after completing the time code settings.
INT/EXT Switch:	During time code recording, this selects whether the recording is to use the AU-F65 (option) or external time code.
TC/UB Switch:	This switches between the time code and user bits display. (It works only when the TC/CTL switch has been set to the TC position.)
LTC/VITC (AUTO) Switch:	
LTC:	The LTCR or LUBR value is displayed.
VITC (AUTO):	The VITC or VUBR value is displayed. LTCR is displayed when VITC has not been recorded on tape. •If the time code cannot be read at either position, interpolation is provided by the CTL signal.

The above illustration shows the AU-63H as seen from the front.

This illustration shows the lower panel of the AU-62H.

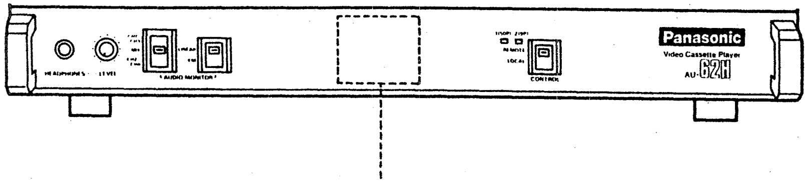

The AU-62H is not provided with the SHTL SELECT switch.

Time code control section on AU-63H / 62H

TC/UB switch:	Selects the time code or user's bit display. (It is effective only when TC has been selected by the TC/CTL switch.)
LTC/VITC (AUTO) switch:	
LTC;	Displays the LTCR or LUBR value.
VITC (AUTO);	LTC or VITC is automatically switched by the tape speed and displayed when the TC/UB switch is at the TC position. LTCR is displayed when VITC has not been recorded on the tape. The VUBR value is displayed when the TC/UB switch is at the UB position. •Interpolation is provided using the CTL signal if it was not possible for the time code to be read regardless of where the switch was set.

4 Basic control area

READY Button:	This is the READY mode ON/OFF button.
PLAYER/RECORDER Buttons: (AU-65H only)	These are used during operation in the P IN P mode and when the 9-pin connector is used to connect the unit with another VTR for editing purpose.
PLAYER Button;	This is pressed when operating the player, which is remote controlled by this unit, while using 2 VTRs for editing.
RECORDER Button; (AU-65H only)	This is pressed when operating the recorder (this unit) while using 2 VTRs for editing.
EDIT Button:	Editing commences when this is pressed together with the PLAY button.
PLAY Button:	To commence Playback mode.
REC Button: (AU-65H only)	To commence Record mode when pressed together with the PLAY button.
REW Button:	Rewinds the tape at 32 times the normal tape speed.
STOP Button:	Shuts down all modes. A noise-free still picture is obtained when this button is pressed during playback while the MODE switch is set to "TAPE".
FF Button:	Fast forwards the tape at 32 times the normal tape speed.
SERVO LOCK Lamp:	Lights during servo lock.
REC INHIBIT Lamp: (AU-65H only)	Lights in the recording inhibit mode.

5 Search control area

SEARCH Indicator:	Indicates the operating status of the search dial.
JOG Button:	Press to establish the JOG mode.
VAR Button: (AU-65H only)	Press to establish the variable mode.
VAR MEMORY Button: (AU-65H only)	Press when conducting a variable memory operation.
SHTL Button:	Press to establish the shuttle mode.
SEARCH Dial:	Changes the search speed.

6 LED display area

LIMITER Lamp:	Lights when the front sub-panel AUDIO LIMITER switch is ON.
DOLBY NR Lamp:	Lights when the DOLBY NR switch is ON.
REF SCH Lamp:	Lights when SCH of the reference video signal is within ±60° of the standard signal.
INPUT SCH Lamp:	Lights when SCH of the LINE IN video signal is within ±70° of the standard signal.
CF Lamp:	Lights in the colour framing mode.

7 Editing point entry area on AU-65H

AUDIO IN Button:	Use this button to enter, check and correct an AUDIO IN point.
IN Button:	Use this button to enter, check and correct an edit IN point. When pressed in the P IN P double mode, the top right picture freezes at the player's IN entry point.
TRIM +/– Buttons:	Use these button to correct an edit point in 1-frame steps.
SET Button:	Use this button to enter an edit point.
GO TO Button:	Use this button to access an edit point.
AUDIO OUT Button:	Use this button to enter, check and correct an AUDIO OUT point.
OUT Button:	Use this button to enter, check and correct an edit OUT point.

8 Editing control area on AU-65H

AUTO EDIT Button:	Press to execute automatic editing.
PREROLL Button:	Press to execute a preroll operation.
PREVIEW Button:	Press to execute a preview operation.
REVIEW Button:	Press to execute a review operation.

9 Editing mode selection area on AU-65H

ASSEMBLE Button:	Press to establish assemble editing mode.
INSERT Button:	Press to establish insert editing mode.
REC INHIBIT Lamp:	This lights in the record inhibit mode.
Editing Channel Selector Buttons:	These select the editing channel.
VIDEO/FM:	Video/FM (CH3/4) is selected.
AUDIO CH1:	Linear CH1 audio is selected.
AUDIO CH2:	Linear CH2 audio is selected.
TIME CODE:	Time code is selected.
SPLIT EDIT Button:	Press this to establish audio split editing mode.

10 Display area

Display:	The tape timer, time code, user bits and error messages appear on this display.
TC/CTL Switch:	Selects whether the time code (TC) or control signal (CTL) is to be used in order to read out the tape position.
RESET Button:	Resets the CTL value to zero.
HOLD Button:	Press to hold whatever is on the display.

11 Bottom panel area

HEADPHONES Jack (6.3 mm):	Connect stereo headphones here.
HEADPHONE LEVEL Control:	Controls the headphones volume.
AUDIO MONITOR Controls:	These select the sound and channel to be monitored.
CH1/3:	For CH1 (or CH3) sound monitoring in both the left (L) and right (R) channels.
MIX:	Monitors CH1 (or CH3) sound in the left (L) channel and CH2 (or CH4) sound in the right (R) channels.
CH2/4:	For CH2 (or CH4) sound monitoring in both the left (L) and right (R) channels.
LINEAR:	Monitors linear sound (CH1/2).
FM:	Monitors FM sound (CH3/4).
MODE Switch: **(AU-65H only)**	This selects the monitoring picture in the stop or recording mode.
TAPE:	Monitors the playback picture.
EE:	Monitors the EE picture.
INPUT Switch: **(AU-65H only)**	Selects the input signal.
LINE:	Records the composite signal from the LINE IN connector.
CMPNT/YC:	Records the signal from the component input connector or YC input connector.
CONTROL Switch:	
REMOTE:	Selects remote control.
LOCAL:	Disables the remote control.

12 Display section

Display:	Indicates tape timer, time code, user's bit and error messages, etc.
Time code lamps:	
VITC;	Lights in VITC mode.
LTC;	Lights in LTC mode.
UB;	Lights in UB mode.
CTL;	Lights in CTL mode.
TC/CTL switch:	Selects the time code (TC) or control signal (CTL) for reading out the tape position indicated on the display. It also selects the reference signal during editing.
RESET button:	When pressed in the CTL mode, the tape timer indicated on the display is reset to zero.
HOLD button:	Press to hold the value now indicated on the display. Press it again to select the time code signal and then return to the previous mode.
REF SCH lamp:	Lights when the reference video signal SCH is ±60°.
CF lamp:	Lights in the colour framing mode.
DOLBY NR lamp:	Lights when the Dolby NR system is working.

Rear Panel

(AU-65H)

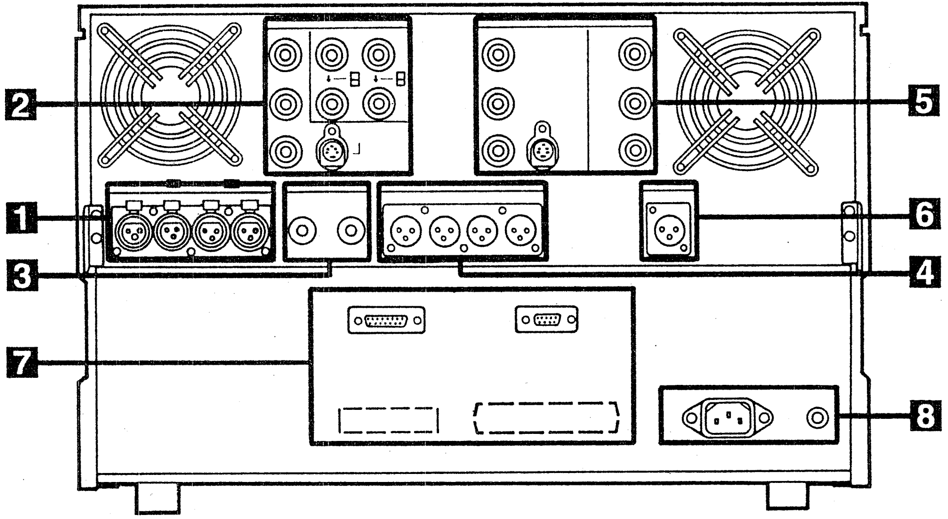

(AU-63H 62H)

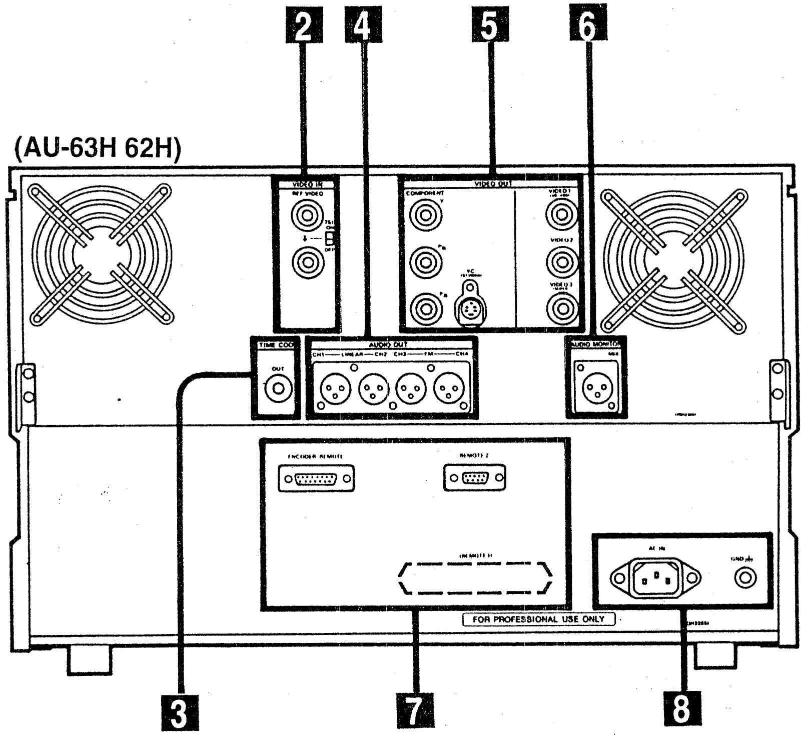

1 AUDIO IN signal area Om Au-65H

CH1-4 IMPEDANCE Switch:	Selects the impedance value of CH1-4.
CH3/4 SELECT Switch:	Selects the signals to be recorded in FM AUDIO CH3/CH4.
LINEAR AUDIO CH1/CH2 Input:	This is the CH1/3 audio input connector.
FM AUDIO CH3/4 Input:	This is the CH2/4 audio input connector.

2 VIDEO IN signal area

COMPONENT Connectors: (AU-65H only)	The component signals (Y, PB and PR) are supplied separately to these input connectors.
LINE IN Input Connectors: (AU-65H only)	The composite video signal is supplied to these input connectors (which come with loop-through 75-ohm terminating switch).
YC Input Connector: (AU-65H only)	This is the input connector for the YC signal which correspond to the wide screen.
REF VIDEO IN Connectors:	The reference signal is supplied to these input connectors (which come with loop-through 75-ohm terminating switch).

3 Time code signal area

TIME CODE Input Connector: (AU-65H only)	The time code signal is supplied to this connector.
TIME CODE Output Connector:	The time code signal is output from this connector.

4 AUDIO OUT signal area

LINEAR AUDIO CH1/CH2 Output Connectors:	These are the output connectors for CH1 and CH2 audio.
FM AUDIO CH3/CH4 Output Connectors:	These are the output connectors for CH3 and CH4 audio.

5 VIDEO OUT signal area

YC Output Connector:	This is the output connector for the YC signal which correspond to the wide screen.
COMPONENT Output Connectors:	The component signals (Y, PB and PR) are output separately from these connectors.
VIDEO 1 Output Connector:	The video signal with sync (VBS) or without sync—depending on the position selected by the circuit board (W2 encoder board) switch—is output from this connector.
VIDEO 2 Output Connector:	The composite signal is output from this connector.
VIDEO 3 Output Connector:	Depending on the setting of the SUPER switch on the B1.SYSTEM CONTROL board, the VTR operating mode, time code or control signal can be superimposed on this output, besides P IN P mode.

There is a delay equivalent to approximately 35ns compared with the VIDEO 1 and VIDEO 2 outputs for an exact phase alignment with that of the reference video signal.

6 AUDIO MONITOR signal area

- L, R or MIX sound is output, depending on the setting of the AUDIO MONITOR switch.

AUDIO MONITOR MIX Output Connector:	The L, R and MIX sound is output from this connector.

7 Remote signal area

REMOTE 2 (9P) Connector:	RS-422A serial remote connector
REMOTE 1 (50P) Connector:	Terminal window for using the optional 50-pin parallel remote connector. Set the front panel CONTROL switch to "REMOTE" and the front sub-panel REMOTE switch to "1".
ENCODER REMOTE Connector:	This is used for the remote control of the internal encoder from an external device.

8 Power supply area

AC IN Socket:	Use the accessory power cord to connect this socket to the power outlet.
GND Terminal:	Be sure to connect this to ground when this unit is connected with another device.

Front Sub-Panel

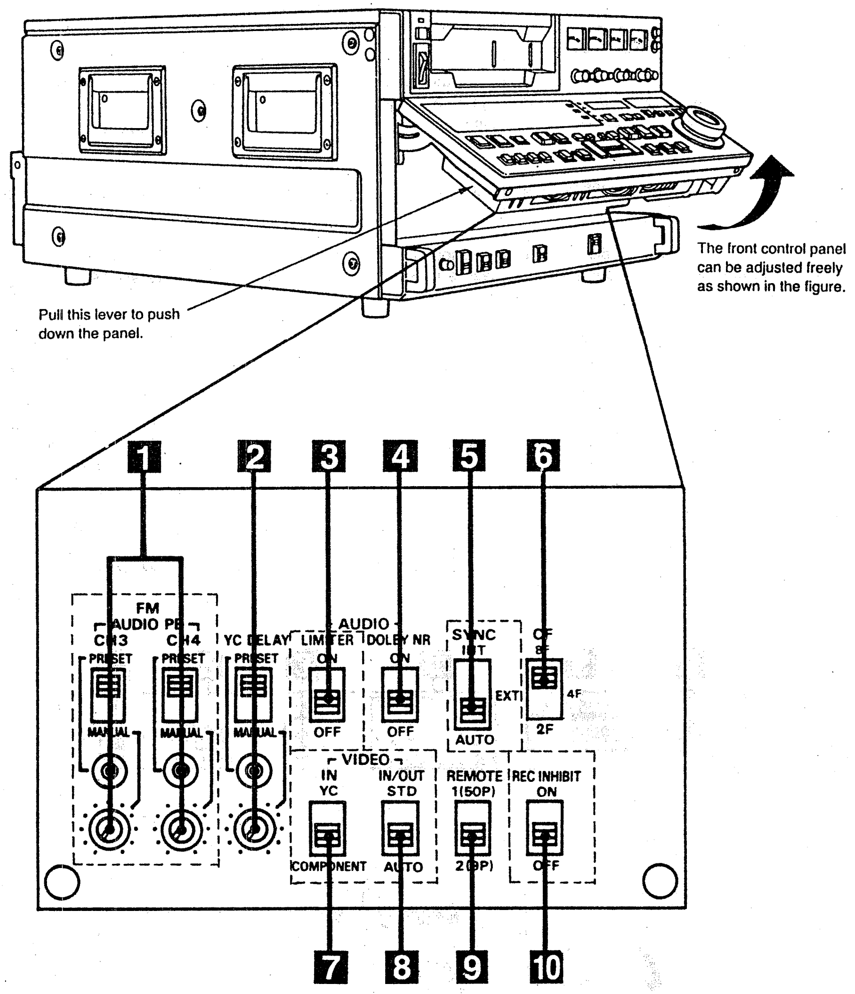

Pull this lever to push down the panel.

The front control panel can be adjusted freely as shown in the figure.

1 **FM AUDIO (CH3 / CH4) PB Switches / Controls : (AU-62H / 63H only)**

PRESET : The playback level of the FM sound is set to the preset status.
MANUAL : The playback level of the FM sound can be adjusted as desired.

2 **YC DELAY Switches/Controls:**

PRESET: YC timing is set to the preset status.
MANUAL: YC timing can be adjusted as desired.

3 **AUDIO LIMITER Switch: (AU-65H only)**

This works for linear audio signals only.
ON: The volume limiter circuit is activated when the input signal level is excessively high.
OFF: The audio signals are recorded at their original level.

4 **DOLBY NR Switch:**

ON/OFF switch for Dolby C Noise Reduction. (This works only for linear audio signals.)

5 **SYNC Switch: (AU-65H only)**

This selects the servo reference signal.
INT: Synchronizes the servo with the internal reference signal during normal playback.
EXT: Synchronizes the servo with the external reference signal.
AUTO: Synchronizes the servo with the video input signal during recording and editing, and with the external reference signal during playback.

6 **CF Switch:**

This selects the colour framing mode during editing and playback.
8F: For recording, playback and editing in 8-field units.
4F: For recording, playback and editing in 4-field units. VISC control is performed.
2F: For recording, playback and editing in 2-field units.

7 **VIDEO IN Switch: (AU-65H only)**

This selects COMPONENT or YC as the video input signal.
YC: For YC signal input.
COMPONENT: For component signal input.

8 **VIDEO IN/OUT Switch: (AU-65H only)**

STD: For supplying a regular composite signal through the time base corrector (TBC).
AUTO: For automatically identifying whether the signal has passed through the TBC or not.

9 **REMOTE Switch:**

1 (50P): When using an optional REMOTE 1 (50P) connector
2 (9P): When using the REMOTE 2 (9P) connector

10 **REC INHIBIT Switch: (AU-65H only)**

ON: The REC INHIBIT lamp lights to indicate that recording is inhibited.
OFF: Signals can be recorded in this position.

B1.SYSTEM CONTROL Board

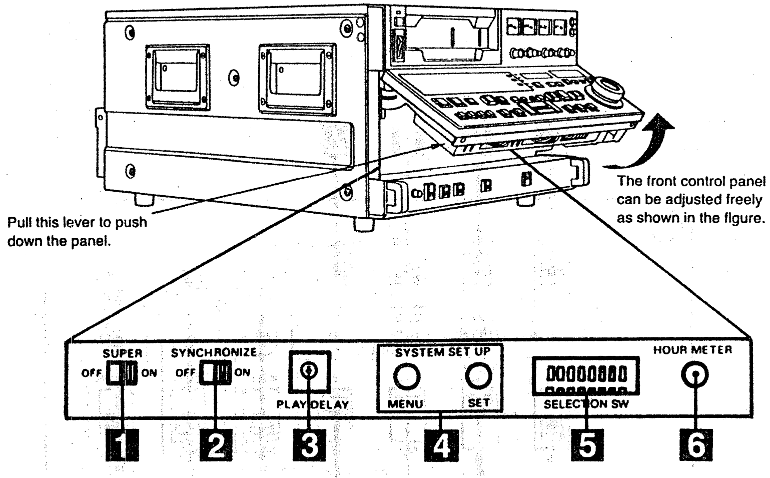
Pull this lever to push down the panel.
The front control panel can be adjusted freely as shown in the figure.
SUPER
OFF
ON
SYNCHRONIZE
OFF
ON
PLAY DELAY
SYSTEM SET UP
MENU
SET
SELECTION SW
HOUR METER
1
2
3
4
5
6

1 **SUPER Switch:** This is the ON/OFF switch for P IN P mode and superimposing time code, status or other character signals onto the signal which is output from the VIDEO 3 connector.

2 **SYNCHRONIZE Switch: (AU-65H only)** When this is set to ON, operation will be synchronized when controlling the player in an editing system where this unit is serving as the recorder.

3 **PLAY DELAY Switch:** This sets the duration (in frame units) of the transition from the stop mode to the play mode. Any value from 0 to 15 can be set.

4 **SYSTEM SET UP Buttons:** These are used to change the unit's setup and moving the sub picture position in the P IN P signal mode.

5 **SELECTION SW:** Not used. (All switches are set to OFF.)

6 **HOUR METER Button:** When this is pressed, the accumulated values for the "Total power ON time" and "Drum rotation time" appear on the display and on-screen.

Display indication

```
P00000H  D00000H
```

On-screen display

```
POWER  ON  00000HOURS
DRUM   ON  00000HOURS
```

B2.TCG/TCR Board

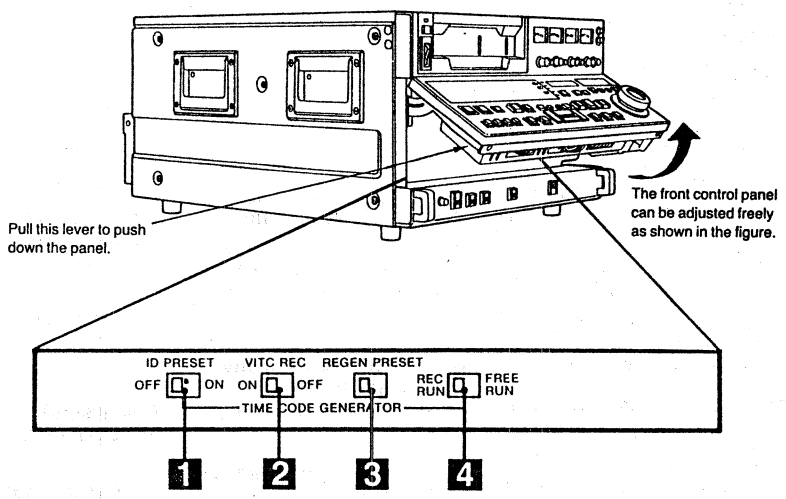
Pull this lever to push down the panel.
The front control panel can be adjusted freely as shown in the figure.
ID PRESET
OFF
ON
VITC REC
ON
OFF
REGEN PRESET
REC RUN
FREE RUN
TIME CODE GENERATOR
1
2
3
4

1 **ID PRESET Switch:** This switch is used to select the ID code. User bits, such as the VTR No., that are likely to be used frequently can be set in advance as a characteristic code (ID code) for the VTR. This ID code can be called whenever necessary. When the set-up menu item No.6008 "UB REAL TIME" is OFF, the following selection can be made.

ON: When the VTR is in the STOP mode, the ID code can be set. When the VTR is in the recording mode, the ID code is recorded.

OFF: The ID code is not set. Instead, the normal user bit values are set/recorded/displayed.

2 **VITC REC Switch:**

ON: To record the new VITC value onto tape.

OFF: The new VITC value is not recorded.

3 **REGEN/PRESET Switch:**

REGEN: To synchronize the internal time code with the playback time code or external time code.

PRESET: To use the internal time code.

4 **REC RUN/FREE RUN Switch:**

REC RUN: The time code runs only during recording.

FREE RUN: The time code runs in real time, regardless of the operating mode of the VTR.

Preset Panel

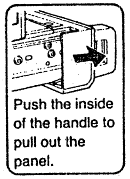
Push the inside of the handle to pull out the panel.

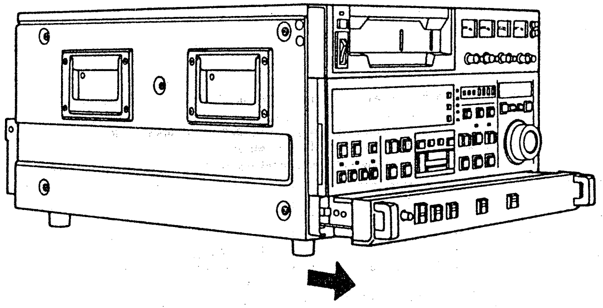

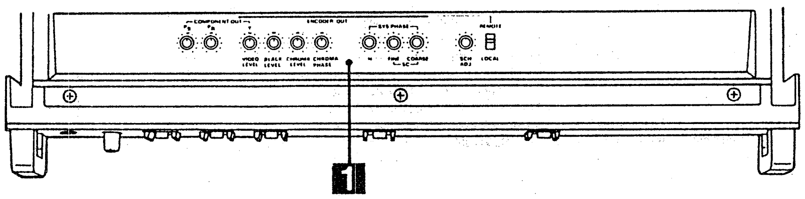
COMPONENT OUT
PB
PR
Y
ENCODER OUT
VIDEO LEVEL
BLACK LEVEL
CHROMA LEVEL
CHROMA PHASE
SYS PHASE
H
FINE
COARSE
SC
SCH ADJ
REMOTE
LOCAL
1

1 ENCODER OUT control area

PB/PR Controls:		Adjust the level of the COMPONENT output signals.
VIDEO LEVEL Control:		Adjusts the level of all the video signals except the sync and burst.
BLACK LEVEL Control:		Adjusts the black level.
CHROMA LEVEL Control:		Adjusts the chroma level.
CHROMA PHASE Control:		Adjusts the chroma phase.
SYS H PHASE Control:		Adjusts the system H phase.
SYS SC Controls:		Adjust the system SC phase.
	FINE:	For continuous adjustment in just over a 90° range; 360° coverage.
	COARSE:	For adjustment in 4 steps of 90° each.
SCH ADJ Control:		This adjusts the SC phase in relation to the sync signal supplied from the VIDEO output connector.
REMOTE/LOCAL Switch:		
	REMOTE:	To adjust the encoder from an external unit.
	LOCAL:	To adjust the encoder using this unit. **Note:** If the ENCODER REMOTE connector has not been connected on the rear panel, LOCAL mode is selected automatically.

Circuit Boards

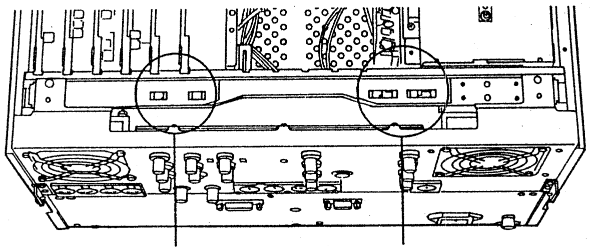
AUDIO LINE IN LEVEL switch AUDIO LINE OUT LEVEL switch

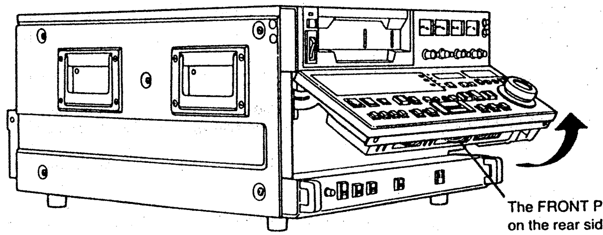
The FRONT PANEL circuit board is on the rear side of the front panel.

CAUTION: TO REDUCE THE RISK OF FIRE OR SHOCK HAZARD, REFER CHANGE OF SWITCH SETTING INSIDE THE UNIT TO AUTHORIZED SERVICE PERSONNEL.

AU-65H onry

PCB	SW No.	Switch	Function	Initial setting
W1 PCB TBC & SYNC GEN	SW4/5/8	V-blanking selector switch	Blanks the video signal during the V-blanking interval (blanking when in ON position). 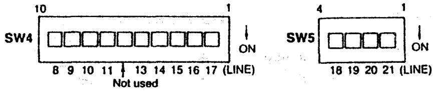 10 1 SW4 ON 8 9 10 11 13 14 15 16 17 (LINE) Not used 4 1 SW5 ON 18 19 20 21 (LINE) **SW8:** 7 LINE When the unit is used as a player during editing, if the VITC insert line position on the tape differs from the settings of the editor, set these switches ON to blank the VITC insert line.	ALL OFF
	SW201	Frame detection switch	Detects the video input frame when there is no TBC. ON: Detection takes place. OFF: Detection is inhibited.	ON
	SW203	VIDEO phase switch	Adjusts the video phase.	9
W2 PCB ENCODER	SW201	SYNC ON/OFF switch	Adds the SYNC signal to the VIDEO OUT1 output signal. ON: SYNC signal is added. OFF: SYNC signal is not added.	ON
W3 PCB MOD & DEMOD	SW1	VIDEO/SYNC meter switch	Selects VIDEO meter.	VIDEO
AUDIO I/O PCB	SW101*/ 301*	AUDIO LINE IN LEVEL switch	Sets the CH1/2 (SW101) or CH3/4 (SW301) audio input level. −20/0/+4 dBu	0 dBu
	SW102/ 302	AUDIO LINE OUT LEVEL switch	Sets the CH1/2 (SW102) or CH3/4 (SW302) audio output level. −20/0/+4 dBu	0 dBu
FRONT PANEL	SW1	Preroll time switch	This selects the preroll time to any value from 0 to 15 secods.	5 sec.
	SW2-1	Not use	———	OFF
	SW2-2	NEGATIVE display switch	This selects whether "NEGATIVE" is to be indicated on the display when the IN point is equal to, or less than, the OUT point during edit point entry. ON: "NEGATIVE" appears in block 2. OFF: "NEGATIVE" does not appear.	OFF
	SW4-1	Remaining tape display switch	This selects whether the remaining tape is to be indicated on the display. ON: Displayed when block 3 is empty. OFF: Displayed all the time.	OFF
	SW4-2	TSO switch	Selects TSO in accordance with the connected machine. ON: TSO for AU-650, AU-620 only. OFF: TSO for AU-750, AU-650B, AU-65, AU-630, AU-640 only (This can be changed in 1% steps up to ±15%).	OFF
	SW4-3~ 4-6	Not used	———	OFF
	SW4-7	Forced EE selector switch	This selects the forced EE mode during tape eject. ON: EE mode is set all the time regardless of the MODE switch position. OFF: Mode corresponds to MODE switch setting.	OFF

*At the time of shipping from the factory, this unit is adjusted so that the audio level meter indicates −4 dB with input of a 1 kHz standard signal.

AU-63H / 62H only

PCB	SW no.	Name	Function	Initial setting
W1 PCB: TBC & SYNC GEN	SW4	V-blanking selector switch	Blanks the video signal during the V-blanking interval (blanking when in ON position). 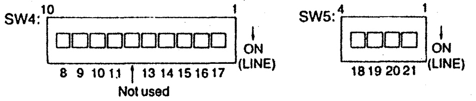 SW4: 10 1 ON (LINE) 8 9 10 11 13 14 15 16 17 Not used SW5: 4 1 ON (LINE) 18 19 20 21 SW8: 7 LINE When the unit is used as a player during editing, if the VITC insert line position on the tape differs from the settings of the editor, set these switches to the ON position to blank the VITC insert line.	ALL OFF
	SW203	VIDEO phase switch	This adjusts the video phase.	9
W2 PCB: ENCODER	SW201	SYNC ON/OFF switch	The SYNC signal is added to the VIDEO OUT 1 output signal. ON: SYNC signal is added. OFF: SYNC signal is not added.	ON
W3 PCB: DEMOD	SW1	VIDEO/SYNC meter switch	Selects the video meter mode.	VIDEO
W6 PCB: AUDIO I/O	SW102	AUDIO LINE OUT LEVEL switch	This sets the CH1/2 AUDIO output level (+4/0/−20 dBu).	0 dBu
	SW302	AUDIO LINE OUT LEVEL switch	This sets the CH3/4 AUDIO output level (+4/0/−20 dBu).	0 dBu
FRONT PANEL PCB	SW1	Preroll time switch	SW1 selects the preroll time.	5 sec.
	SW2-1	Remaining tape display switch	Selects whether the remaining time is to be indicated on the display. ON: Display OFF: No display	OFF
	SW2-2	———	———	OFF
	SW2-3	TSO switch	Select the tape speed override (TSO) according to the machine connected. ON: TSO for AU-650, AU-620 only OFF: TSO for AU-60, AU-65, AU-65H, AU-640, AU-660 only TSO can be varied in 1% increments up to ±15%.	OFF

Item		Set-up value		Description on function
No.	Superimpose display	No.	Superimpose display	
1013	FREEZE SELECT	00 01	OFF ON	Noise-free still pictures are played back. 00: The picture is not frozen. 01: The picture is frozen when the mode is transferred from playback to stop.
1014 AU-65H only	WIDE INPUT SELECT	00 01	AUTO WIDE	Selects whether to record wide size video information contained in the YC input signals. 00: The wide size is automatically identified by the wide size information in the YC input signals, and it is recorded. 01: The wide size information is recorded regardless of the input.
1015	WIDE OUTPUT SELECT	00 01 02	AUTO NORMAL WIDE	Selects whether to place the wide size information on the YC output signals. 00: The wide size information is automatically placed on the YC output signals by the wide size information on the tape. 01: The wide size information is not placed on the YC output signals. 02: The wide size information is placed on the YC output signals.

Superimpose set-up items

[The shading denotes the initial setting.]

Item		Set-up value		Description of function
No.	Superimpose display	No.	Superimpose display	
2001	CHARACTER BACKGROUND	00 01	Selection is made while observing superimposed display.	Selects the type of characters for the VIDEO 3 superimpose display. 00: Black display LTCR **:**:**:**. 01: Edge display LTCR **:**:**:**
2002	CHARACTER H-POSITION	00 01 02 03 04 05 06 07	Selection is made while observing superimposed display.	Selects horizontal position for VIDEO 3 superimpose display; moves characters towards right as NO. is increased. 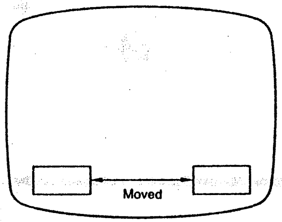

Set-up Menus (cont.)

Superimpose set-up items (cont.)

[The shading denotes the initial setting.]

Item		Set-up value		Description of function
No.	Superimpose display	No.	Superimpose display	
2003	CHARACTER V-POSITION	00 01 02 03 04 05 06 07	Selection is made while observing superimposed display.	Selects vertical position for VIDEO 3 superimpose display; moves characters down as NO. is increased. 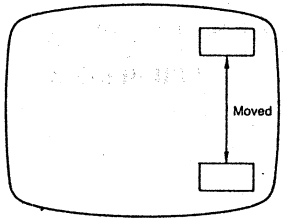
2004	STATUS SUPER	00 01	OFF ON	Selects whether VTR operation mode is to be indicated as a superimposed display of VIDEO 3 output signal.
2005 AU-65H only	VIDEO OUT 3 SELECT	00 01 02	SUPER P IN P P IN P+SUPER	When the SUPER switch on the B1. SYSTEM CONTROL board is ON, either the superimpose display at VIDEO OUT 3 or P IN P output is selected. 00: Only superimpose is displayed. 01: Only P IN P is output. 02: Both are output.
2006 AU-65H only	P IN P MODE SELECT	00 01	SINGLE DOUBLE	Selects the P IN P mode. 00: The player VTR's picture is output at the top right of the screen as the sub picture. 01: The player VTR's picture is output both at the top right and top left of the screen.

Operation Method of Dial Menu Functions

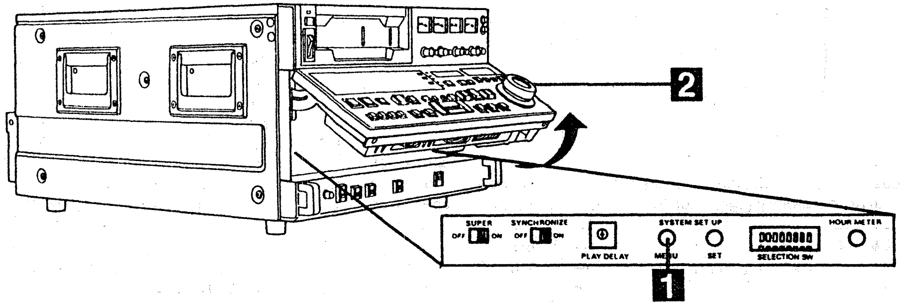

1 Press the MENU button on the B1. SYSTEM CONTROL board.

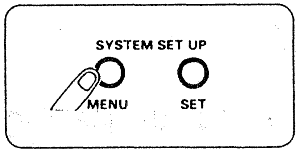

SETUP-MENU NO. 1001

01 STILL TIME SELECT
02 TAPE PROTECTION SELECT
03 READY OFF MODE SELECT
04 SHTL DIAL MODE SELECT
06 SHTL MAX SPEED SELECT
07 VTR MODE AT TAPE END
10 TBC CONTROL SELECT

Superimpose display

The picture below appears on the monitor.
(If changes were made previously to the set-up, the screen will show the last such change.)

Display

SETUP–MENU
NO. 1001

2 Turn the search dial and find the setting item.

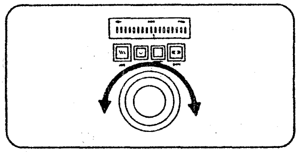

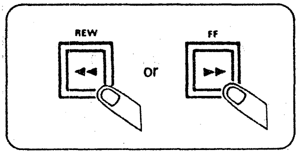

When the dial is rotated clockwise, the setting items are successively incremented (1001→1002→1003, etc.); conversely, when it is rotated counterclockwise, they are decremented.

Press the FF (page up) or REW (pack down) button to change the set-up menu in page units.
The set-up menu changes page by page.

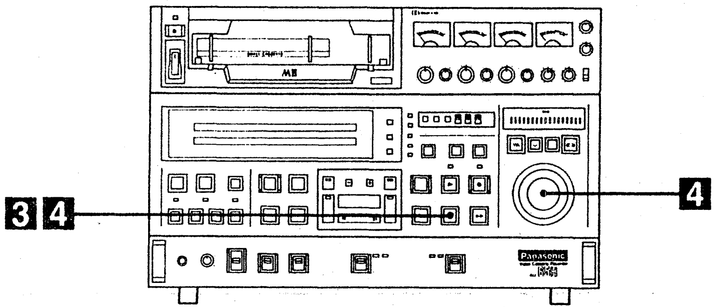

3 Press the STOP button at the desired item.

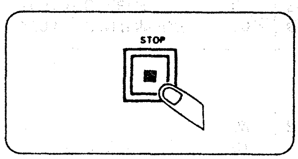

SETUP-MENU NO. 1001-1

STILL TIME SELECT

5 SEC

Superimpose display

The set-up display, such as that below, will appear on the screen for as long as the STOP button is held down.

Display

SETUP–MENU
NO. 1001–1

4 Turn the search dial while holding down the STOP button.

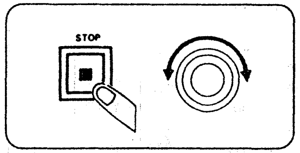

SETUP-MENU NO. 1001-3

STILL TIME SELECT

30 SEC

Superimpose display

The flashing display changes. Set to the desired value.

Display

SETUP–MENU
NO. 1001–3

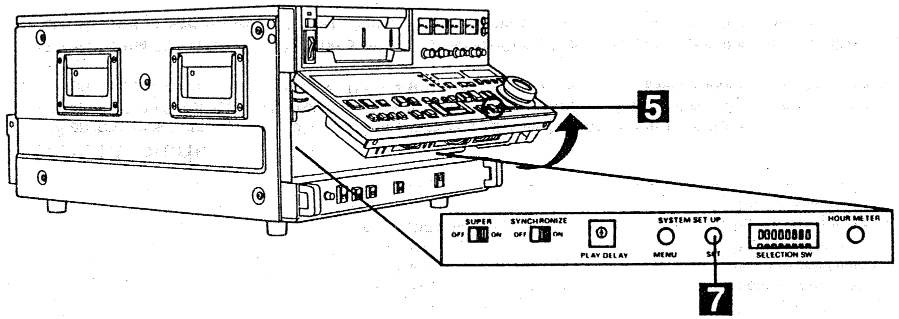

5 Release the STOP button.

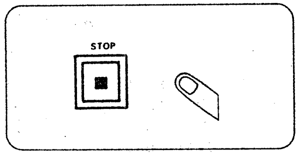

The set-up menu display returns to the screen.

6 Repeat steps 3 to 5.

Set all the set-up items to be changed to the desired values.

7 Press the SET button on the B1. SYSTEM CONTROL board.

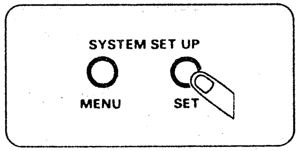

Upon completion of the setting, press the SET button on the B1. SYSTEM CONTROL board.
The set-up changes are stored in the memory.

REFERENCE

- **To terminate operation in the mode without storing the settings in the memory:**
  Press the MENU button on the B1. SYSTEM CONTROL board.
- **To return the set-up to the initial settings (set at the factory):**
  Press the RESET button while the set-up menu is displayed. The following message will now appear.

```
SETUP-MENU    INIT. SET OK?
             (PUSH PLAY KEY)
```

The original settings are restored when the PLAY button is pressed.

Set-up Menus

Operation/function set-up items

[The shading denotes the initial setting.]

Item		Set-up value		Description of function
No.	Superimpose display	No.	Superimpose display	Description of function
1001	STILL TIME SELECT	00 01 02 03 04 05 06 07	0.5 SEC 5 SEC 10 SEC 30 SEC 1 MIN 3 MIN 5 MIN 10 MIN	When the unit is left in the STOP or STILL mode, this selects the duration of time after which the unit is automatically placed in the TAPE PROTECTION mode in order to protect the tape.
1002	TAPE PROTECTION SEL	00 01	T. RELEASE READY OFF	This selects the operation in the tape protection mode. 00 : Tape tension release 01 : Ready OFF mode (in conformity with No. 1003)
1003	READY OFF MODE SELECT	00 01 02	DRUM ROTATE DRUM STOP UNLOADING	Selects the operation in the READY OFF mode. 00 : Drum rotates. 01 : Drum stops rotating. 02 : Unloading.
1004 AU-65H /63H only	SHTL DIAL MODE SELECT	00 01	DIRECT SHTL PRESET VAR	Selects the operation mode for the dial in any mode except shuttle. 00 : Direct shuttle mode 01 : Preset variable mode.
1004 AU-62H only	SHTL DIAL MODE SELECT	00 01	DIRECT SHTL NON DIRECT SHTL	Selects the dial oepration mode (not in the SHTL mode). 00 : Direct shuttle mode 01 : Normal
1005 AU-63H only	VAR/P-PLAY SELECT	00 01	VAR P-PLAY	00 : Variable mode 01 : Program playback mode
1006	SHTL MAX SPEED SELECT	00 01	*32 *16	Selects the maximum search speed in the shuttle mode. 00 : 32x normal tape speed 01 : 16x normal tape speed
1007	VTR MODE AT TAPE END	00 01	STOP AUTO REW	Selects the operation after the tape-end has been detected. 00 : Stop 01 : Automatic rewinding to start
1010	TBC CONTROL SELECT	00 01	V-FLOAT NON V-FLOAT	Used to float the internal SYNC to enable H to be aligned with the reference signal and V to be aligned with the input signal. 00 : Floating 01 : Not floating
1011	STD/NON-STD SELECT	00 01	FRONT SWITCH NON-STD	Selects whether to forcibly establish the NSTD mode regardless of the position of the VIDEO IN/OUT switch on the front sub-panel. 00 : As per position set by VIDEO IN/OUT switch. 01 : NSTD mode is forcibly established.
1012	VISC CONTROL SELECT	00 01	CONTROLLED NOT CONTROLLED	This uses VISC to align the subcarrier phase of the input video signal and the subcarrier phase of the encoder video output signal. (It is effective only during normal playback with CF SW 4F or 8F.) 00 : VISC control 01 : No VISC control

P IN P Function on AU-65H

This function uses a main picture and sub picture to enable playback signals and input signals to be displayed on the same monitor screen. In the single mode, the main picture and sub picture can be switched, and the linear sound of the main picture is output from MONITOR OUT.
When used in the double mode, the player's IN points can be checked during automatic editing operations using two recorders.

Monitor screen displays

		P IN P mode			
		SINGLE mode (main/sub picture switching possible)		**DOUBLE mode** (main/sub picture switching impossible)	
Superimposing modes (video output 3)	**SUPER** (super-imposing only)	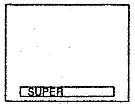		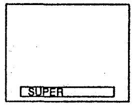	
	P IN P (P IN P mode only)	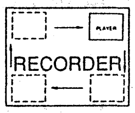 Picture is moved by SYSTEM SET UP button on B1. SYSTEM CONTROL board.	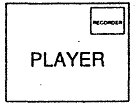 The main picture is replaced by the sub picture and vice versa when the PLAYER/ RECORDER button is pressed.	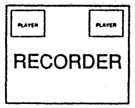	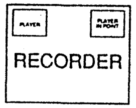 The top right sub picture freezes at the IN entry point when the IN and SET buttons are pressed at the same time.
	P IN P + SUPER (super-imposing and P IN P mode)	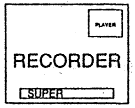	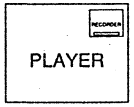 The main picture is replaced by the sub picture and vice versa when the PLAYER/ RECORDER button is pressed.	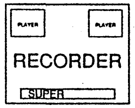	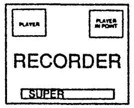 The top right sub picture freezes at the IN entry point when the IN and SET buttons are pressed at the same time.

SINGLE mode

- When the power is turned on, the player's picture is monitored at the top right as the sub picture.
- While the PLAYER button is depressed or while the PLAYER lamp has lighted, the player's picture serves as the main picture to replace the recorder's picture. The linear sound is also switched to the player's sound. (The FM sound is not switched.)
- Each time the SYSTEM SET UP button on the B1. SYSTEM CONTROL board is pressed, the display position of the sub picture is moved. (However, the sub picture cannot be moved while the menu screen is displayed.)

DOUBLE mode

- When the power is turned on, the player's picture is monitored at the top right and top left as sub pictures.
- When the player's IN point is entered (by pressing the IN and SET buttons simultaneously), the sub picture at the top right freezes. When the IN point is reset, it is released.

Set-up menus (cont.)

Remote set-up items

[The shading denotes the initial setting.]

Item		Set-up value		Description of function
No.	Superimpose display	No.	Superimpose display	
3001	REMOTE OPERATION SEL	00 01 02 03	SEPARATE LOCAL+REMOTE BOTH REMOTE ALL OPERATION	Selects connector which can be controlled when REMOTE switch is at REMOTE position. 00: Selected by CONTROL switch 01: Control panel and connector selected 02: REMOTE 1 and REMOTE 2 03: All operations possible
3002	EJECT/STOP FNCTN REM.	00 01	POSSIBLE NOT POSSIBLE	Selects operation of panel EJECT/STOP button in remote mode. 00: Enables operation. 01: Disables operation.
3003	50P STOP STATUS SEL	00 01	FLASHING NOT FLASHING	Selects whether or not to indicate by flashing the STOP status signal which is supplied to 50-pin remote connector in READY-OFF mode. 00: Flashing 01: Not flashing
3004	9P DEVICE TYPE SELECT	00 01 02	OTHER TYPEs 1 OTHER TYPEs 2 M2 ID	Selects ID code returned in response to 9P device type request command when control is exercised using 9-pin remote connector. 00 : 1100 (BVU-800) 02 : A111 (AU-62H) 01 : 2125 (BVW-75) 02 : A112 (AU-63H) 02 : A110 (AU-65H)
3005	VTR AD-DRESS	00 01 02 03 04 05 06 07 08 09 10 11 12 13 14 15	A (8880) B (8882) C (8884) D (8886) E (8888) F (888A) G (888C) H (888E) I (88C0) J (88C2) K (88C4) L (88C6) M (88C8) N(88CA) O (88CC) P (88CE)	Sets identification number of each VTR when VTRs are connected to a multi-drop system through an RS-422 (9-pin) serial bus under the control of a special controller. This setting is effective starting from the time when the power is next switched ON.

Editing set-up items

[The shading denotes the initial setting.]

Item		Set-up value		Description of function
No.	Superimpose display	No.	Superimpose display	
4001 AU-65H only	CF ADJUSTMENT SELECT	00 01	TO PLAYER TO RECORDER	Selects the VTR which is to adjust the entered points for VTR-to-VTR editing. (0 to +3 frame) 00: The points on the player tape are adjusted. 01: The points on the recorder tape are adjusted.
4002 AU-65H only	EDIT FIELD SELECT	00 01	ODD EVEN	Selects the start field for editing. 00: Start with odd number field 01: Start with even number field
4003 AU-65H only	AUTO PREROLL ENTRY	00 01	NOT ENTERED ENTERED	Selects whether to enter the IN point by pressing the pre-roll button when the IN point has not been entered. 00: Entered 01: Not entered

Colour framing set-up items

[The shading denotes the initial setting.]

Item		Set-up value		Description of function
No.	Superimpose display	No.	Superimpose display	
5004	CF SELECT AT Pb OUT	00 02	AUTO ON	Selects whether to add the colour framing ID to the COM-PONENT PB OUT connetor signal. 00: Forcibly added when the composite video input signal is recorded in the normal recording or assemble editing mode. Added when CF lamp lights in the playback mode. 02: Added

Set-up menus (cont.)

Time code set-up items

[The shading denotes the initial setting.]

Item		Set-up value		Description of function
No.	Superimpose display	No.	Superimpose display	
6001 AU-65H only	VITC POSITION SEL-1	00 01 02 03 04 05 06 07 08 09 10 11 12	8 LINE 9 LINE 10 LINE 11 LINE 13 LINE 14 LINE 15 LINE 16 LINE 17 LINE 18 LINE 19 LINE 20 LINE 21 LINE	Selects VITC signal insertion line. *Same line as No.6002 cannot be selected.
6002 AU-65H only	VITC POSITION SEL-2	00 01 02 03 04 05 06 07 08 09 10 11 12	8 LINE 9 LINE 10 LINE 11 LINE 13 LINE 14 LINE 15 LINE 16 LINE 17 LINE 18 LINE 19 LINE 20 LINE 21 LINE	Selects VITC signal insertion line. *Same line as No.6001 cannot be selected.
6003 AU-65H only	TCG REGEN MODE	00 01 02	TC+UB TC UB	Selects regeneration signal when TCG is in REGEN mode. 00: Regenerated for time code and user bits. 01: Regenerated for time code only. 02: Regenerated for user bits only.
6004 AU-65H only	REGEN AUTO MODE	00 01 02 03	ASSEM+INSERT ASSEM INSERT TC SWITCH	Selects whether time code is to be regenerated in VTR-to-VTR editing. 00: Regenerated for assemble and insert editing. 01: Regenerated for assemble editing. 02: Regenerated for insert editing. 03: Conforms to time code board setting.
6005 AU-65H only	TCG REFERENCE	00 01	AUTO REF	Selects reference signal for time code generator. 00: Automatically selected under same condition as servo reference 01: Reference video signal serves as reference.

Time code set-up items

[The shading denotes the initial setting.]

Item		Set-up value		Description of function
No.	Superimpose display	No.	Superimpose display	
6006	TC OUT SIGNAL REGEN	00 01	OFF TAPE REGEN	Selects waveform which is output from TIME CODE OUT connector in internal regeneration mode. 00: Outputs playback signals in their original form. 01: Regenerates and outputs playback signals only in servo lock mode.
6007 AU-65H only	UB BINARY GROUP FLAG	00 01 02 03	NOT SPECIFIED ISO CHARACTER UNASSIGNED 1 UNASSIGNED 2	Selects mode for using user bits generated by TCG. 00: No character set assigned. 01: 8-bit character set conforming to ISO646, ISO2022. 02/03: Not defined
6008 AU-65H only	UB REAL TIME	00 01 02 03	OFF LTC UB VITC UB BOTH	Sets the real time mode for the user bits. 00: No setting 01: Setting for LTC UB only 02: Setting for VITC UB only 03: Setting for both LTC UB and VITC UB
6009	WAKEUP SELECTION	00 01	TC CTL	Selects the time data display when power is ON. 00: TC display 01: CTL display
6010	TCG CF FLAG	00 01	OFF ON	Selects whether CF flag of time code generator is to be set ON. 00: CF flag not set 01: CF flag is set, and time code generator is locked to CF of video signal during recording.

Error Messages on AU-65H

Display	Description	VTR operation
SERVO NOT LOCKED	Flashes during the PLAY, REC PLAY or EDIT PLAY mode when the servo system has been disengaged for 3 or more seconds.	Continues operation
LOW-RF	Flashes when a dropout has been detected for 2 or more seconds while the PLAY lamp is ON and the tape is traveling at 1× speed.	Continues operation
DRUM MOTOR	Alarm sounds and message flashes when drum lock status continues for 5 or more seconds.	Stops
REEL MOTOR	Alarm sounds and message flashes when, in capstan mode, take-up reel does not rotate while the tape is advanced by about 10 cm.	Stops
FRONT LOAD MOTOR	VTR mode is transferred to eject if cassette does not assume "down" position even when 5 seconds have elapsed after cassette was inserted.	Ejects cassette
	Alarm sounds and message flashes when cassette does not assume "up" position when VTR is transferred to eject mode and 5 seconds have elapsed after cassette was inserted.	Stops
LOADING MOTOR	VTR mode is transferred to unloading when loading operation is not completed within 10 seconds.	Unloads tape
	Alarm sounds and message flashes when unloading operation is not completed within 10 seconds.	Stops
PHOTO TRANSISTOR	Alarm sounds and message flashes when sensor LED has failed.	Stops
DEW	Alarm sounds and message flashes when condensation has formed.	* Ejects tape
TAPE SLACK	Alarm sounds and message flashes when tape is slack.	Stops
REEL DRIVE ERROR	Alarm sounds and message flashes when actual tape advance direction differs from system control command by 5 or more seconds.	Stops
DC ○○ V TROUBLE	Alarm sounds and message flashes when there is something wrong with the power supply or related parts.	Stops
FAN STOP	Alarm sounds and message flashes when fan inside power supply box stops operating.	Continues operation
FG TROUBLE	Alarm sounds and message flashes when there is something wrong with reel travel during high-speed search.	Stops
NEGATIVE	Flashes when front panel DIP SW2-2 is ON if IN point is equal to or greater than OUT point during edit point entry.	———

*When condensation has formed, the drum continues to rotate so that the condensation will dry out. Once it has been removed, the AUTO OFF lamp and error display go off, and the VTR can be used again.

Error messages on AU-63H / 62H

Contact your authorized dealer if any of the error messages listed below should appear on the display.

Display	Description	VTR operation
E-00	Display flashes during playback when servo disturbances continue for 3 or more seconds.	Operation continues.
E-01	Display flashes when dropouts have been detected for more than 2 sec. during 1× tape speed while PLAY lamp is lighted.	Operation continues.
E-10	Alarm sounds and display flashes when drum lock continues for 5 or more sec.	Operation stops.
E-11	Alarm sounds and display flashes when take-up reel does not rotate while tape is fed for about 10 cm.	Operation stops.
E-14	Alarm sounds and display flashes when cassette is not lowered into position even when 5 seconds have elapsed after the cassette was inserted.	Tape is ejected.
	Alarm sounds and display flashes when cassette is not raised and ejected even when the eject mode is established and 5 seconds have elapsed.	Operation stops.
E-15	Alarm sounds and display flashes when loading is not completed within 10 sec.	Tape is ejected.
	Alarm sounds and display flashes when unloading is not completed within 10 sec.	Operation stops.
E-16	Alarm sounds and display flashes when sensor LED is disconnected.	Operation stops.
E-17	Alarm sounds and display flashes when condensation has formed.	(*)Tape is ejected.
E-18	Alarm sounds and display flashes when tape is slack.	Operation stops.
E-19	Alarm sounds and display flashes when the system control instruction and actual tape feed direction differ for more than 5 sec.	Operation stops.
E-1C E-21 ~ E-26	Alarm sounds and display flashes when a failure or malfunction arises in the power supply section.	Operation stops.
E-1F	Alarm sounds and display flashes when the fan inside the power supply box stops operating.	Operation continues.
E-20	Alarm sounds and display flashes when a failure or malfunction occurs to the reel transport during high-speed search.	Operation stops

When condensation has formed, the drum rotates in order to remove the condensation.
When the condensation is removed, the AUTO OFF lamp goes off, the error display is cleared, and the VTR can be operated again.

Head Cleaning

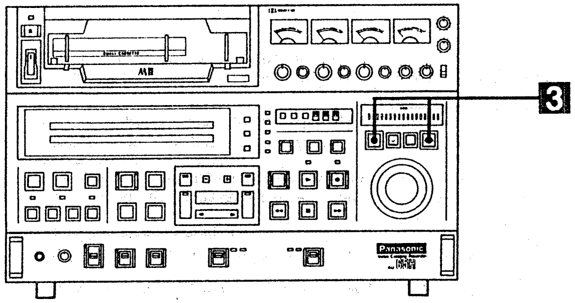

1 Set the VTR to the stop mode.

2 Remove the cassette tape.

3 Press the JOG and SHTL buttons together.

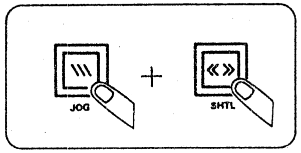

The loading post moves in order to facilitate head cleaning.

4 Proceed with head cleaning.

Handle the parts with the utmost care. For further details, contact your dealer.

5 Upon completion of the work, perform one of the following operations.

1) **Set the POWER switch to OFF and then back to ON.**

2) **Press the EJECT button.**

3) **Insert a cassette tape.**

6 This completes the head cleaning process.

Handling Precautions

Handling precautions

Vibration: Avoid using the unit in a location susceptible to vibration.

Magnetism: Do not bring the unit near a magnet.

Temperature: Avoid using the unit in extremely hot or cold areas or in direct sunlight. Failure to do so may cause its performance to deteriorate.
- Operating temperature: +5°C to +40°C

(Under no circumstances must the fan area at the back of the ventilation hole section be blocked or covered since the fan serves to safeguard against inside temperature rises.)

Humidity: This unit is particularly vulnerable to humidity and moisture. Avoid locations where the humidity is high or where the unit may be exposed to rain.

Transportation: Remove the cassette tape from the unit when transporting it from place to place.
When disconnecting the power cord from the power outlet, remember to take hold of the power plug (and not the cord itself).

Installation

Take the operating environment and installation space into account. Adherence to the points below will ensure that full justice will be done to the unit's excellent quality, and operating and servicing ease.

- Use the unit on a flat and even surface.
- Do not place objects on top of the unit.
- If the unit is to be used on a stand, make sure that the stand is strong and sturdy.
- To facilitate ventilation and servicing, leave clearances of at least 40 cm behind the unit from a wall or other surface.
- If the unit is to be used on a desk or other such surface, leave a clearance of at least 20 cm above it in order to facilitate the servicing of the circuit board. There is no need to leave any clearances when mounting the unit in a rack since the unit is pulled out when its circuit boards are to be maintained.

Maintenance

Before proceeding with maintenance, set the power switch to OFF and take hold of the power plug to disconnect it from the power outlet.
Use a soft cloth to clean the cabinet. With stubborn stains or dirt, use a mild detergent solution, allow a cloth to soak in it, and then wring it out and clean. After having removed the stains or dirt, use a dry cloth to wipe away any moisture.
Do not use paint thinners or benzine.

Storage

- Avoid storing the unit in a location characterized by extremely high or low temperatures.
- Under no circumstances should the unit be left outdoors.
- If there are no plans to use the unit for a prolonged period, set the power switch to OFF and, remembering to take hold of the power plug, disconnect it from the power outlet. This is done to safeguard against accidents and break downs.
- Before storing, always remember to remove the cassette tape if one is still inside the unit.

Rack Mounting

Using the optional AU-M60 rack-mounting adaptors, the unit can be housed in a standard IEC 48.2 cm rack. For the mounting rails, either the rails and bracket unit (part no. CC3001-99-0191) made by Chassis Trak or the rails (part no. C-2038-1215) and brackets (part no. BK-2308) made by Accuride are recommended. Consult with your dealer for further details.

1 Remove the 6 screws each at the left and right sides of the main unit.

2 Attach the inner members

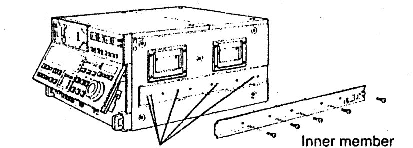

•Use the remaining holes for Accuride.

Attach the inner members of the slide rails using the screws which have just been removed.
There is a limit to the length of the screws used. If any of the mounting screws have been lost or misplaced, use screws (M4x10) with a length of not more than 10 mm.
Screw down the inner members in 4 or more places.

3 Remove the 4 rubber feet on the unit's bottom panel.

4 Attach the outer member brackets to the rack.

Check that the height at the left and right is the same.

5 Attach the optional AU-M60 rack-mounting adaptors.

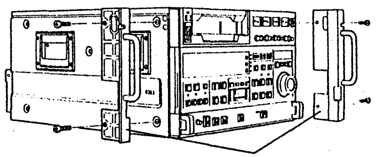
Optional rack-mounting adaptors

6 Check that the unit slides properly in and out.

Mount the unit in the rack, and check that it slides smoothly on the rails.

Note :

INNER SWITCH SETTING (INITIAL MODE)

Circuit Board	Ref. No.	NAME	Shipment Mode			
			NTSC		PAL	
			AU-65H	AU-63H/62H	AU-65H	AU-63H/62H
W1	SW1	COMB				
	SW6	CNC				
	SW7	15LP	ON	ON	ON	ON
	SW8	7LBLK			ON	ON
	SW201	FR DET	ON	ON	ON	ON
	SW203	VIDEO POS	6	6	8	8
	SW4	V BLK1	ALL OFF	ALL OFF	ALL OFF	ALL OFF
	SW5	V BLK2			ALL OFF	ALL OFF
W2	SW200	—	OFF	OFF		
	SW201		ON	ON	ON	ON
	SW800	VISC CONT			ON	ON
W3	SW201	—	NON TEST		NON TEST	
	SW202	—	NON TEST		NON TEST	
	SW304	Y SUPER LIM	ON	ON	ON	ON
	SW305	A EQ VAR				
	SW306	A EQ SW				
	SW704	C SUPER LIM	OFF	OFF	ON	ON
	SW1	VIDEO/SYNC	VIDEO		VIDEO	
W4	SW101	WOBBLING				
	SW201	YC CONT	NORM		NORM	
	SW701	2.7MHz GEN	NORM		NORM	
W5	SW3	AUTO H	UP SIDE		UP SIDE	
	SW700			AUTO (63)		AUTO (63)
B1	SW7	SELECTION	ALL OFF	ALL OFF	ALL OFF	ALL OFF
	SW3	PLAY DELAY	0	0	0	0
	SW1	SYPER	OFF	OFF	OFF	OFF
	SW2	SYNC HRON1	ON		ON	
B2	SW5	ID PRESET	OFF	OFF	OFF	OFF
	SW7	VITC REC	ON	ON	ON	ON
	SW1	REG/PRE	REGEN	REGEN	REGEN	REGEN
	SW4	REC RUN	REC RUN	REC RUN	REC RUN	REC RUN

Circuit Board	Ref. No.	NAME	Shipment Mode			
			NTSC		PAL	
			AU-65H	AU-63H/62H	AU-65H	AU-63H/62H
AUDIO IN/OUT	SW101	LINE IN	+4dBu		+0dBu	
	SW301	LINE IN				
	SW102	LINE IN	+4dBu	+4dBu	+0dBu	+0dBu
	SW302	LINE IN	+4dBu	+4dBu	+0dBu	+0dBu
		CH1 ~ 4Ω				
		CH3/4 SERE				
VIDEO IN/OUT	SW1	VIDEO 75Ω	ON		ON	
	SW2	REF 75Ω	ON	ON	ON	ON
		COMP-CTCM				
	SW3	PB LEV	NORM			
	SW4	PR LEV	NORM			
	SW5					
	SW6	PB LEV				
	SW7	PR LEV				
FRONT I/F		AUDIO PB 3	PRESET	PRESET	PRESET	PRESET
		AUDIO PB 4	PRESET	PRESET	PRESET	PRESET
		YC DELAY	PRESET	PRESET	PRESET	PRESET
		LIMITER	OFF		OFF	
		NR	OFF	OFF	OFF	OFF
		SYNC INT	AUTO		AUTO	
		CF	4F	4F	8F	8F
		VIDEO IN	COMP		COMP	
		VIDEO I/O	AUTO		AUTO	
		REMOTE	2 (9P)	2 (9P)	2 (9P)	2 (9P)
		REC INH	OFF		OFF	
		MIXING				
		TC TRACK				
FRONT UP		POWER SW	OFF	OFF	OFF	OFF
		AUDIO VR	PUSH	PUSH	PUSH	PUSH
		VIDEO-CH4	VIDEO	VIDEO	VIDEO	VIDEO
		VIDEO	PUSH	PUSH	PUSH	PUSH
		TRACKING	CLICK	CLICK (62)	CLICK	CLICK (82)
		AUDIO METER	LINEAR	LINEAR	LINEAR	LINEAR

Circuit Board	Ref. No.	NAME	Shipment Mode			
			NTSC		PAL	
			AU-65H	AU-63H/62H	AU-65H	AU-63H/62H
FRONT MID		INT-EXT	INT		INT	
		TC-UB	TC	TC	TC	TC
		LTC-VITC	LTC	LTC	LTC	LTC
		DF-NDF	DF	DF		
		PREROLL	5	5	5	5
PULL OUT DRAWER VR		Pb	CLICK	CLICK	CLICK	CLICK
		Pr	CLICK	CLICK	CLICK	CLICK
		Y	CLICK	CLICK	CLICK	CLICK
		SET UP	CLICK	CLICK	CLICK	CLICK
		CHROMA	CLICK	CLICK	CLICK	CLICK
		HUE	CLICK	CLICK	CLICK	CLICK
		REM-LOCAL	LOCAL	LOCAL	LOCAL	LOCAL
		SYNC				
		BURST				
		SCH ADJ.				
		HEAD PHONE	MIN	MIN	MIN	MIN
		AUDIO MONI	ST	ST	ST	ST
		FM/LINEAR	LINEAR	LINEAR	LINEAR	LINEAR
		MODE	EE		EE	
		HEAD	R/P		R/P	
		INPUT	COMP		COMP	
		CONTROL	LOCAL	LOCAL	LOCAL	LOCAL
		SHTL SEL		VAR (63)		VAR (63)

TECHNICAL EXPLANATIONS

This section describes a new features as a basic guidance.

Panasonic

1. Digital 3 Dimensional TBC using Field Memory

The newly developed models AU-65H/63H/62H incorporate a "3 Dimensional TBC" which helps to compensate for the dropout which occurs due to, for example, damage to the recording medium.
Using conventional line-compensation techniques, when a large dropout lines are replaced with the line prior to the dropout (Figure 1-1a) which results in an imperfect picture. The "3D" TBC design incorporates a gate array which replaces the current data with the previous field data which existed before the dropout occurred (Figure 1-1b).
Dropouts of 1H or less are line-compensated by replacing the dropout with the average of the data in previous and subsequent lines. (Figure 1-1c). If a dropout occurs in the first line of a field the picture will become completely dark as in conventional line compensation. This development makes it possible to more accurately approximate the original image.

1-2. Features

1) Line or Field compensation is selected according to the amount of dropout compensation needed for optimum picture quality.

2) When dropouts are line-compensated the dropout point is averaged in order to improve diagonal line compensation.

3) The dropout signal is coded into 8 bit data and superimposed onto the video signal which makes it possible to reduce the number of field memories.
Each field memory consists of 4 bits.

4) When the REF and input signals are synchronized in "Non-V float" mode, the output signal is displaced by 4 horizontal lines with respect to REF (in the case of the AU-65/63/62 it is displaced by 12H)

5) The signal is tailored according to the dropout with respect to field compensation. In the event of a large dropout, a delay is added after the line compensation is complete. This delay is dependent upon the width of the previous field and is required to make allowance for the time taken for the Automatic Frequency Control (AFC) to reset after the dropout has occurred.
Data writing to the field memory will eventually be affected since the AFC is disturbed following dropout occurrence.

1-3. Construction

The "3D" TBC can be divided into the following 4 blocks: (See Figure 1-2)

- Y Signal Write Control
- Y Signal Read Control
- C signal Write Control
- C Signal Read Control

1) Y signal Write Control
When a dropout occurs, the signal is converted into a dropout code which is output to the field memory as a video signal. Both write-timing for the field memory (V reset/H reset) and data inhibit are controlled when a dropout occurs. Furthermore, if there is a dropout within the first 22 lines of the picture for which line compensation is carried out, the previous lines become dark due to V blanking. Therefore, control is always achieved for field compensation with no line compensation.

2) Y Signal Read Control
Read control is mainly carried out by the new gate array, IC33 (MB606905U) and is used for both Y and C signals. Data before 1H, current data and data after 1H are input to this array which calculates the average value according to the presence or absence of dropout. The field memory read timing and line memory write clock are also controlled by this block so that no dropout data is written into the line memory from this block.

3) C Signal Write Control
The basic operation is the same as for Y signal write control. However, the compressed C signal is expanded and separated into Pr and Pb signals. For this compressed signal, the respective 400 data is written to the line memory for 2H at a clock rate of 13.5MHz. This data is simultaneously read out at 6.75MHz. After this signal is compressed into a dot sequence it is output to the field memory.

4) C Signal Read Control
IC34 (MB606905U) handles C signal read control. Pr and Pb are read alternately from the field memory with a 13.5MHz clock, which extends the signal. Since a chroma signal is compressed into a dot sequence, if a dropout occurs in Pb or Pr then these must also be processed as dropouts.

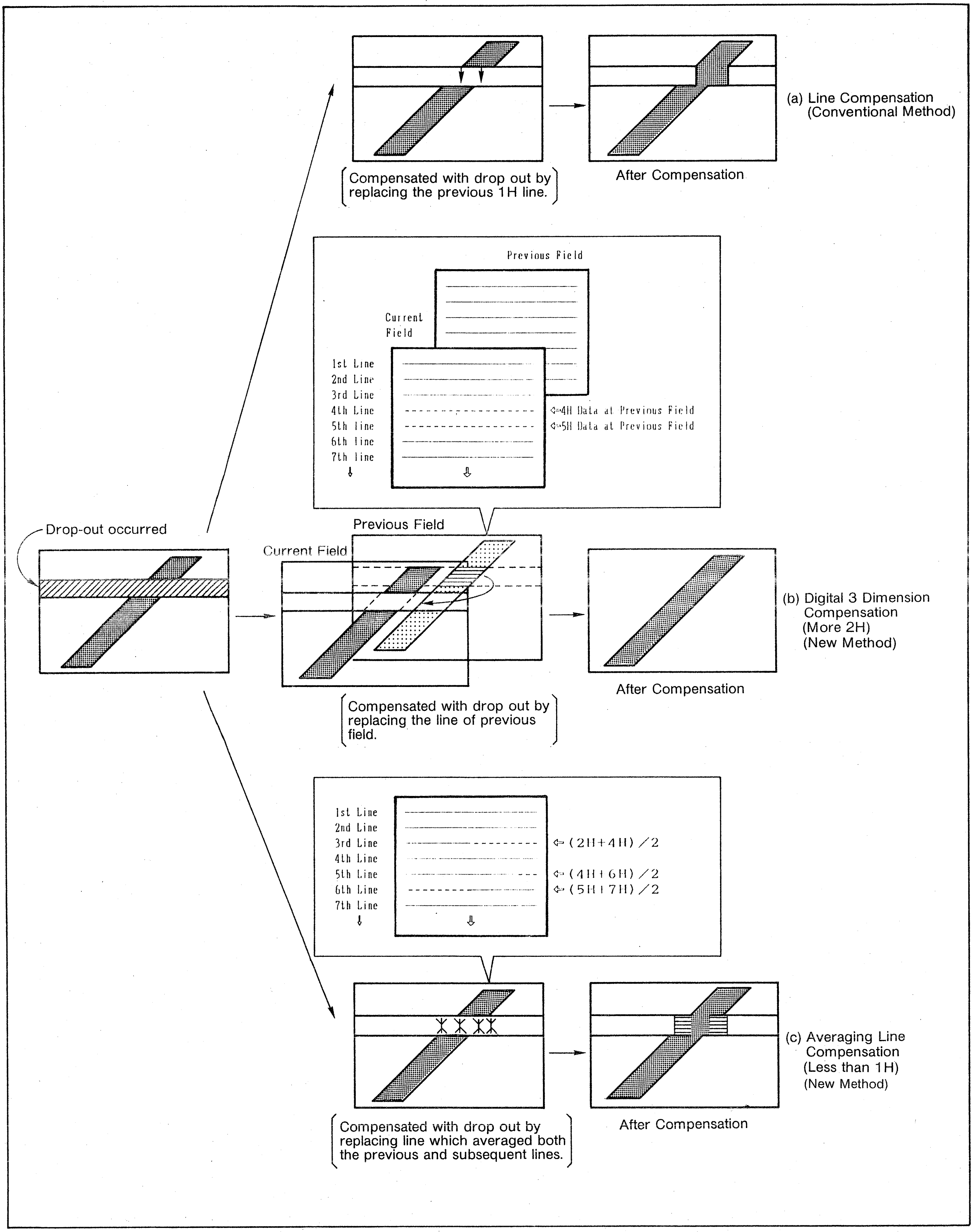
(a) Line Compensation (Conventional Method)
Compensated with drop out by replacing the previous 1H line.
After Compensation
Previous Field
Current Field
1st Line
2nd Line
3rd Line
4th Line
5th line
6th line
7th line
⇦4H Data at Previous Field
⇦5H Data at Previous Field
Drop-out occurred
Previous Field
Current Field
After Compensation
(b) Digital 3 Dimension Compensation (More 2H) (New Method)
Compensated with drop out by replacing the line of previous field.
After Compensation
1st Line
2nd Line
3rd Line
4th Line
5th Line
6th Line
7th Line
⇦(2H+4H)/2
⇦(4H+6H)/2
⇦(5H+7H)/2
(c) Averaging Line Compensation (Less than 1H) (New Method)
Compensated with drop out by replacing line which averaged both the previous and subsequent lines.
After Compensation

Figure 1-1. Dropout Compensator

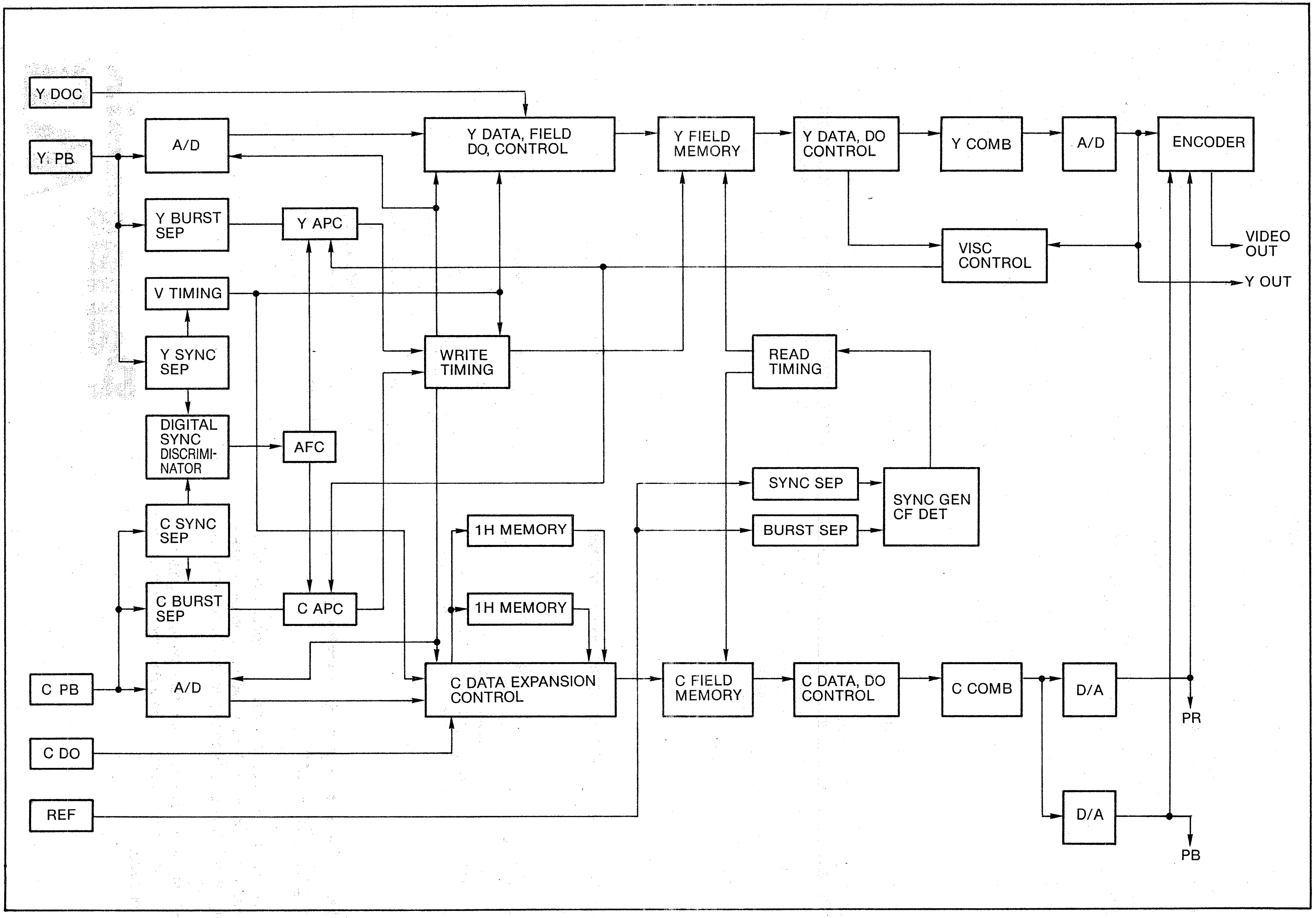
Y DOC
Y. PB
A/D
Y BURST SEP
V TIMING
Y SYNC SEP
DIGITAL SYNC DISCRIMI-NATOR
C SYNC SEP
C BURST SEP
C PB
A/D
C DO
REF
Y APC
AFC
C APC
Y DATA, FIELD DO, CONTROL
WRITE TIMING
1H MEMORY
1H MEMORY
C DATA EXPANSION CONTROL
Y FIELD MEMORY
READ TIMING
SYNC SEP
BURST SEP
SYNC GEN CF DET
C FIELD MEMORY
Y DATA, DO CONTROL
VISC CONTROL
C DATA, DO CONTROL
Y COMB
C COMB
A/D
D/A
D/A
ENCODER
VIDEO OUT
Y OUT
PR
PB

Figure 1-2. Block Diagram of Field TBC.

2. Picture in Picture (P in P) Section

The P in P facility incorporated into the AU-65H allows either the incoming video signal or playback signal from tape to be reduced to one-third of its normal size and viewed (as a "sub-picture") on any one of the four corners of the monitor screen (termed the "main-picture") as shown in Figure 2-1. This function permits viewing of both the incoming and playback signals at the same time which would allow, for example, two machine editing to be carried out using a single monitor.
This P in P signal is available from the Video 3 (SUPER) socket.
A simplified block diagram of the P in P system is shown in Figure 2-2.

2-1. Choice of Sub-picture and Main -Picture

The incoming video signal, separated by the DECODER into Y, Pb and Pr, is sent to the SUB-ENCODER on the "SENC and P in P" board where it is encoded into a composite video signal (P IN P VIDEO) as shown in Figure 2-3.
The P IN P VIDEO signal and the playback video signal (P SIG) are switched in IC1, this determines which of the signals is the "main picture" and which is the "sub picture". Pushing the PLAYER button on the front panel, alternates between the sub and main pictures.

2-2. Sub Picture Decoder and Sync Separator

A part of the composite sub-picture signal from IC1 passes through FL3 via a 1.3MHz low-pass filter creating the Y signal - the remainder of the signal is sent to IC2. In IC2, Pb and Pr signals are decoded and H sync and V sync are separated - these signals then pass on to IC4 (see Figure 2-4).

2-3. Main Picture Sync Separator and FSC Signal Generator

The main-picture composite video is processed by IC3 which separates the H and V sync signals and generates an FSC signal which is synchronized to the burst signal (see Figure 2-5).
The FSC signal is applied to IC4 (sub-picture signal processing circuit) and is used to generate the clock for the digital encoder.

2-4. Sub-Picture Signal Processing

a) Sampling

Y, Pb and Pr signals relating to the sub-picture are reduced to one-third size by IC4. Shrinkage of the horizontal axis is performed by multiplying the ratio of the data read frequency to the sampling frequency by a factor of three.
The vertical axis is reduced by sampling one horizontal line out of every three.
This P in P system samples Y, Pb and Pr signals from different horizontal lines.
Y signal data is sampled on the first horizontal line, Pb and Pr data is sampled on the following line using a time-sharing process. No signal data is sampled on the third line (see Figure 2-6).

b) Reading the Sub Picture Signal Data

The digital data from the A/D converter is arranged in the memory control block and written to the video RAM. This data is then read out when the scanning point on the monitor screen reaches the sub-picture position. The main picture sync signals (PVD, PHD) are used to insert the sub picture into the main picture at the desired position.
The video RAM data is sent to a latch circuit which adjusts the timing of Y, Pb and Pr signals. Before the Pb and Pr signals undergo D/A conversion they are digitally modulated into a C signal, then the Y and C signals are D/A converted separately (see Figure 2-7). Digital encoding is performed by the FSC signal synchronized to the main picture burst signal to adjust the chroma phase of the sub picture with that of the main picture.

2-5. Insertion of Sub Picture

Y and C signals relating to the sub-picture are converted to analog and mixed by IC3 to produce a composite signal. The sub picture and main picture signals are then switched in IC1 by the Switching Signal (SSW) from IC4 which is synchronized to the sub picture data.
A white frame is added to the sub picture. This signal (FRAME LEVEL) is produced by IC1 and switched with the sub picture and main picture signals by the switching signal (WSW) from IC4 (see Figure 2-8).

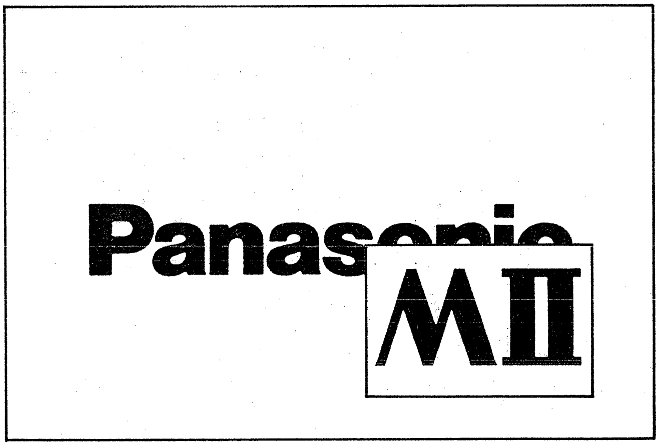

Figure 2-1.

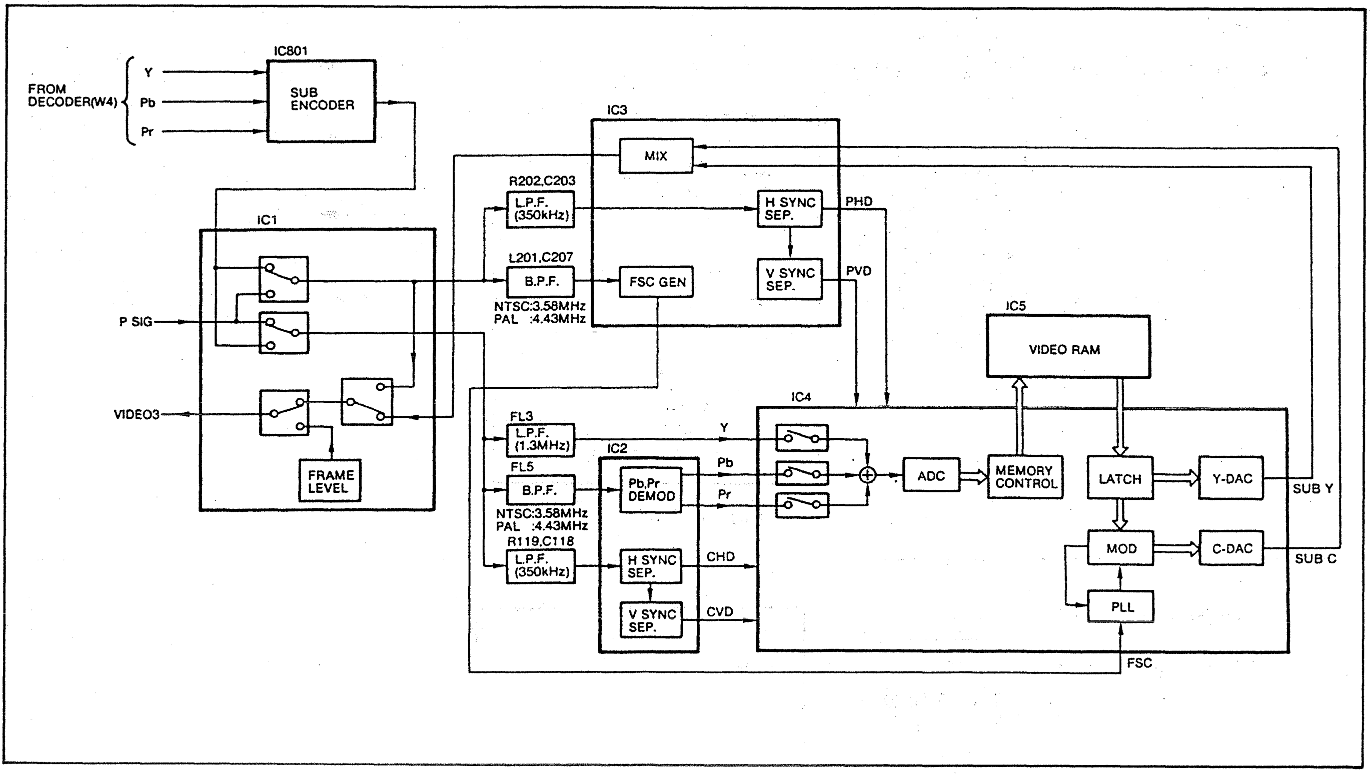
IC801
FROM DECODER(W4)
Y
Pb
Pr
SUB ENCODER
IC3
MIX
R202,C203
L.P.F. (350kHz)
H SYNC SEP.
PHD
IC1
L201,C207
B.P.F.
FSC GEN
V SYNC SEP.
PVD
NTSC:3.58MHz
PAL :4.43MHz
P SIG
IC5
VIDEO RAM
VIDEO3
IC4
FL3
L.P.F. (1.3MHz)
Y
IC2
FL5
Pb
B.P.F.
Pb,Pr DEMOD
Pr
ADC
MEMORY CONTROL
LATCH
Y-DAC
SUB Y
FRAME LEVEL
NTSC:3.58MHz
PAL :4.43MHz
R119,C118
L.P.F. (350kHz)
H SYNC SEP.
CHD
MOD
C-DAC
SUB C
V SYNC SEP.
CVD
PLL
FSC

Figure 2-2.

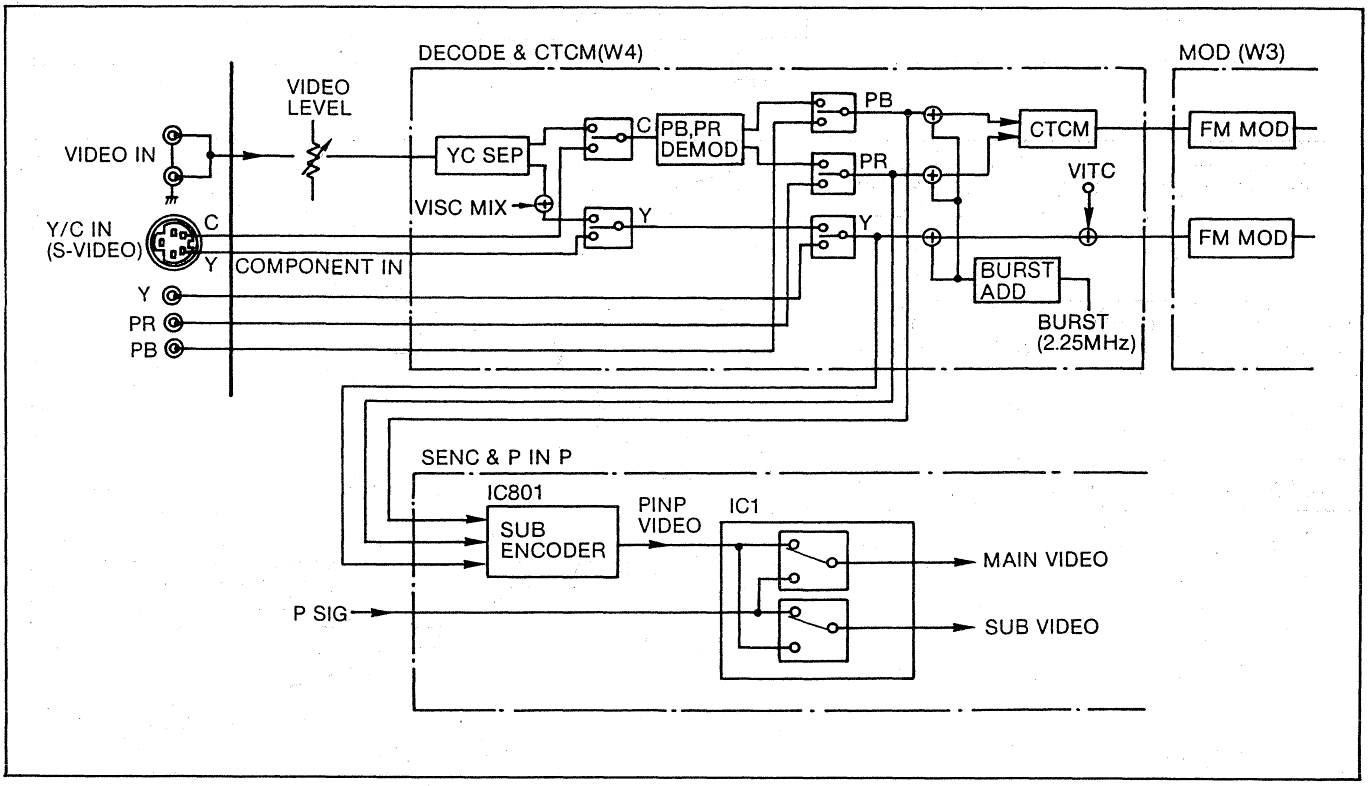
DECODE & CTCM(W4)
MOD (W3)
VIDEO LEVEL
VIDEO IN
YC SEP
C
PB,PR DEMOD
PB
PR
CTCM
FM MOD
VITC
VISC MIX
Y
Y
Y/C IN (S-VIDEO)
C
Y
COMPONENT IN
FM MOD
BURST ADD
Y
PR
PB
BURST (2.25MHz)
SENC & P IN P
IC801
SUB ENCODER
PINP VIDEO
IC1
MAIN VIDEO
P SIG
SUB VIDEO

Figure 2-3.

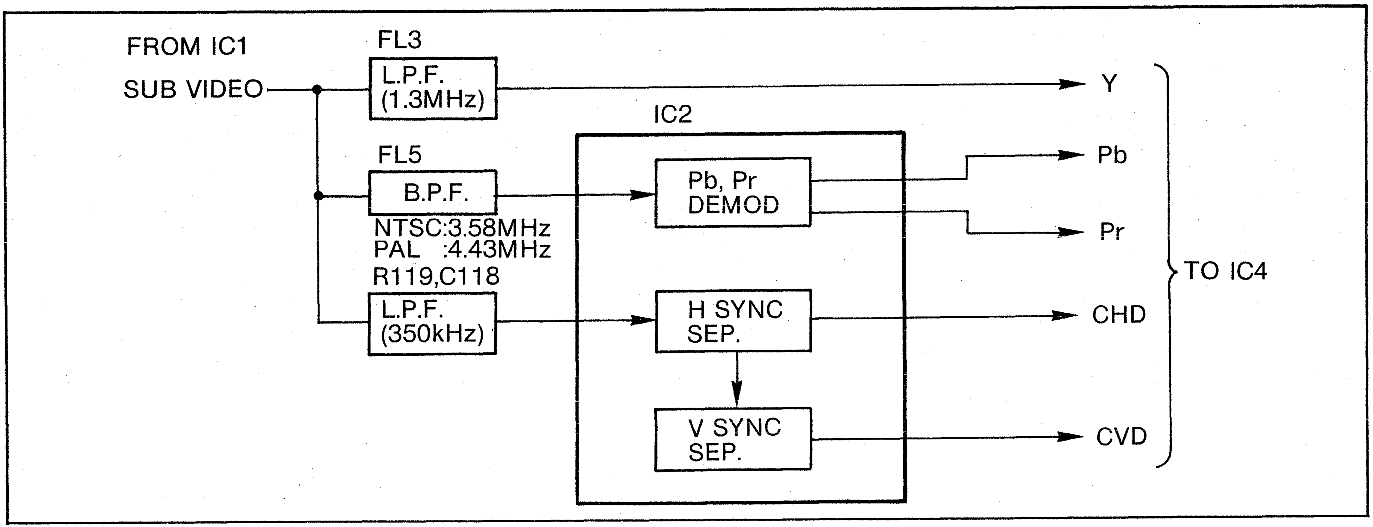
FROM IC1
SUB VIDEO
FL3
L.P.F.
(1.3MHz)
Y
IC2
FL5
B.P.F.
NTSC:3.58MHz
PAL :4.43MHz
Pb, Pr
DEMOD
Pb
Pr
TO IC4
R119,C118
L.P.F.
(350kHz)
H SYNC
SEP.
CHD
V SYNC
SEP.
CVD

Figure 2-4.

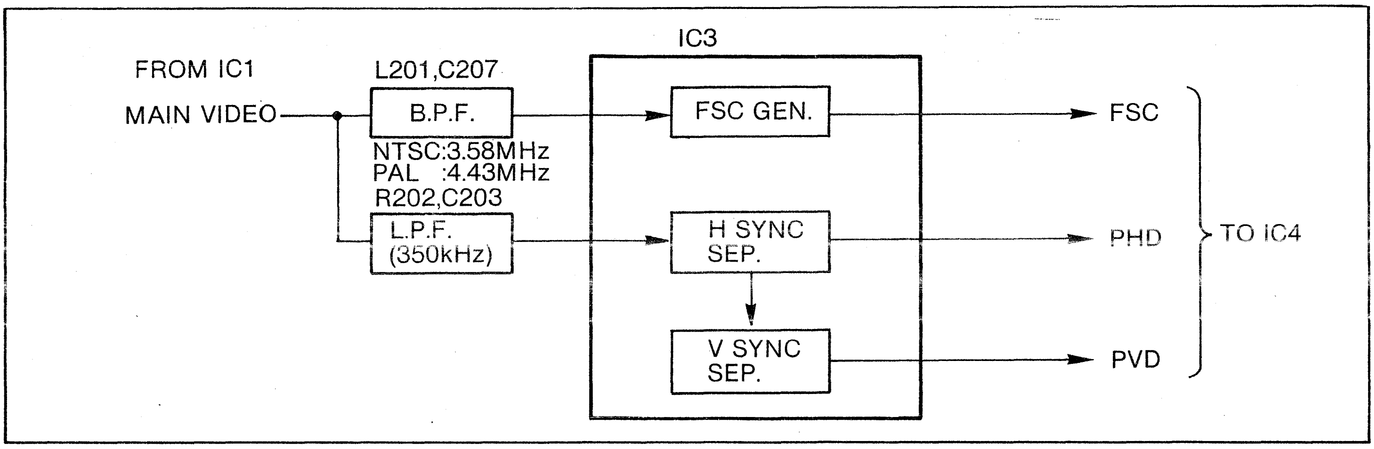
IC3
FROM IC1
MAIN VIDEO
L201,C207
B.P.F.
FSC GEN.
FSC
NTSC:3.58MHz
PAL :4.43MHz
R202,C203
L.P.F.
(350kHz)
H SYNC
SEP.
PHD
TO IC4
V SYNC
SEP.
PVD

Figure 2-5.

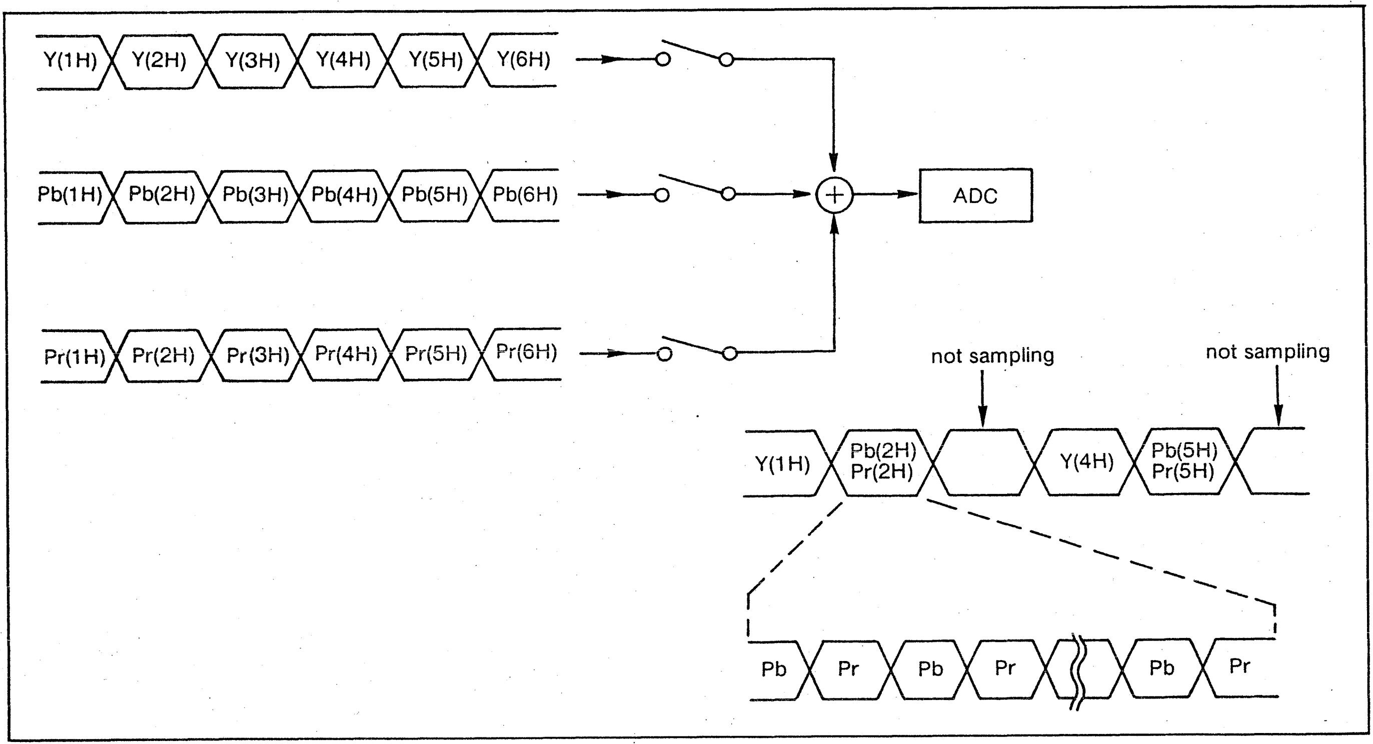
Y(1H)
Y(2H)
Y(3H)
Y(4H)
Y(5H)
Y(6H)
Pb(1H)
Pb(2H)
Pb(3H)
Pb(4H)
Pb(5H)
Pb(6H)
+
ADC
Pr(1H)
Pr(2H)
Pr(3H)
Pr(4H)
Pr(5H)
Pr(6H)
not sampling
not sampling
Y(1H)
Pb(2H)
Pr(2H)
Y(4H)
Pb(5H)
Pr(5H)
Pb
Pr
Pb
Pr
Pb
Pr

Figure 2-6.

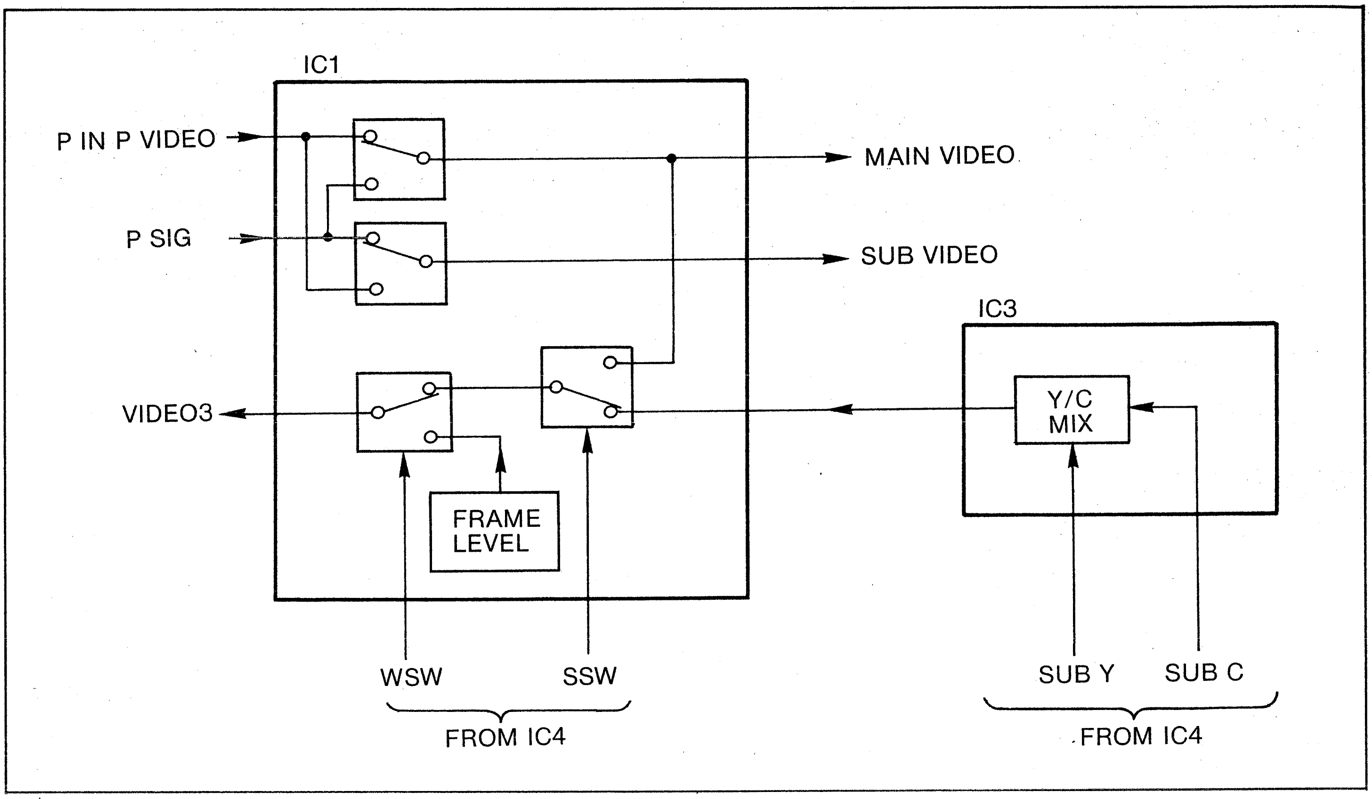
IC1
P IN P VIDEO
P SIG
MAIN VIDEO
SUB VIDEO
IC3
VIDEO3
Y/C MIX
FRAME LEVEL
WSW
SSW
FROM IC4
SUB Y
SUB C
FROM IC4

Figure 2-8.

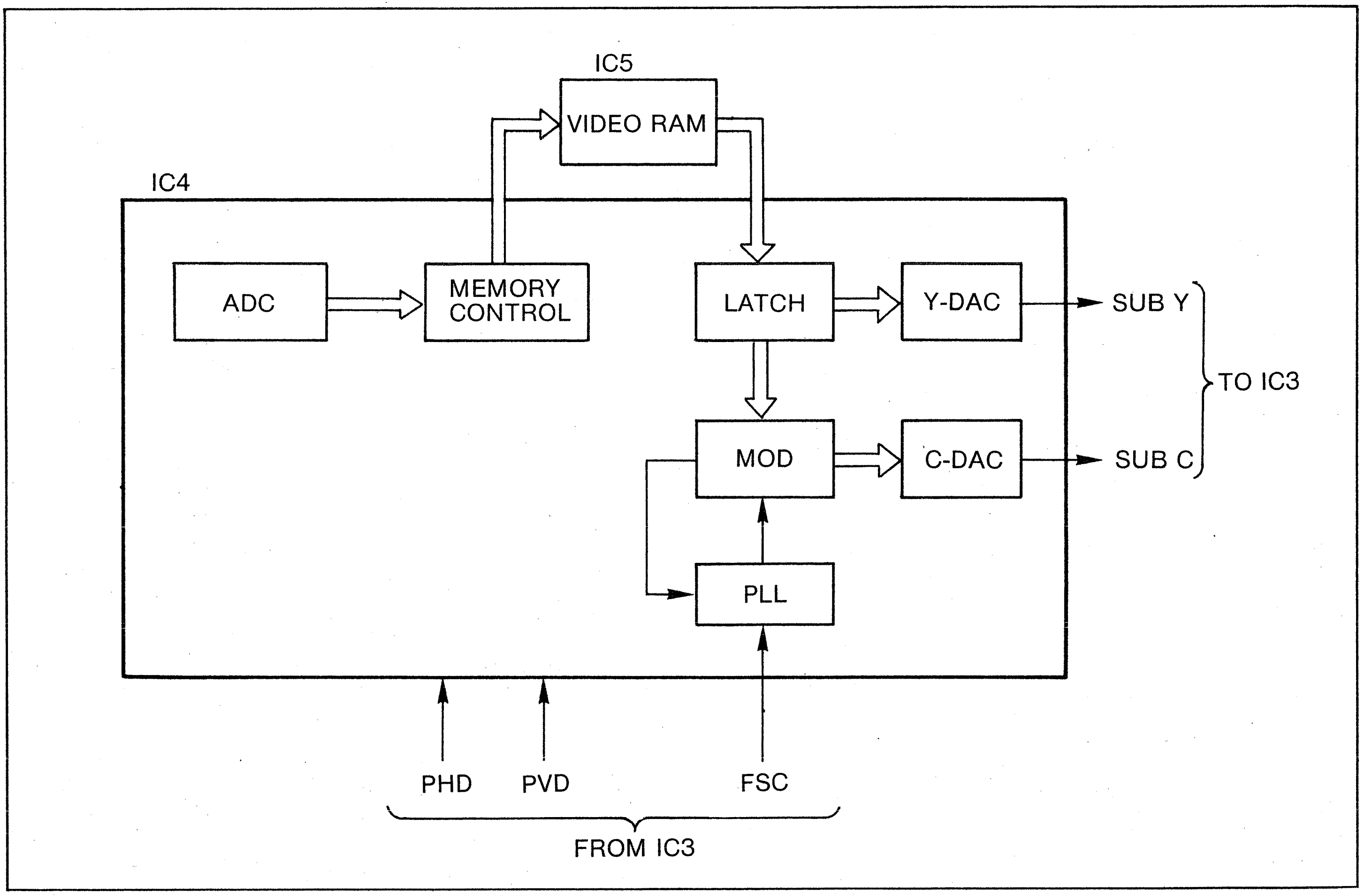
IC5
VIDEO RAM
IC4
ADC
MEMORY CONTROL
LATCH
Y-DAC
SUB Y
TO IC3
MOD
C-DAC
SUB C
PLL
PHD
PVD
FSC
FROM IC3

Figure 2-7.

3. Wide size 16:9 ratio video

3-1. General

The AU-65H/63H and 62H are equipped with a 16:9 picture ratio function which will allow them to be used in future High Vision/wide video broadcasting applications. High Vision broadcasting is slowly coming into everyday use for example, when converting 16:9 video into standard 4:3 video using a digital converter such as the "Muse Converter" the signal will be recorded onto these machines complete with associated wide size information.

Upon playback, the machine feeds the wide size information (superimposed upon the C signal) to a suitable monitor and a "wide flag" signal automatically selects wide mode. See Figure 3-1.

This video system consists of two main sections, Wide Video Detection and Wide Input/Output Select.

3-2. Wide Size Video Detection

In the MII VTR, wide size video information (the "wide flag") is recorded onto tape to provide wide picture recognition on compatible equipment. The wide flag consists of 5v DC superimposed upon lines 12 and 255 of the Pr signal (PAL) and lines 15 and 277 of the Pr signal (NTSC). When a tape containing this signal is replayed, 5v is superimposed on the C signal (video output S1) and sent to the TV monitor for auto wide size selection (see Figures 3-2, 3-3).

3-3. Wide Input/output Selection

The wide size input and output information can be selected on the set-up menu (Item 1014 - wide input select, Item 1015 - wide output select).

"Wide Input Select" determines whether or not the wide size video information contained in the C signal on video input S1 is recorded.

"AUTO" -	wide size video information is automatically superimposed onto the C signal (output S1) when there is wide information on the tape.
"NORMAL"-	wide size information is not superimposed on output S1.
"WIDE" -	continously superimposes the wide size information onto the C signal (output S1).

Note: Connection S1 should always be used when dubbing material containing wide size information from one machine to another. Attempting to dub using component Y, Pb and Pr connections may result in errors as the signal by passes the wide input/output select on the set-up menu.

3-4. Wide Size Video Y/C Connectors

Input: S1 VIDEO IN
Output: S1 VIDEO OUT

Note: When replaying or recording wide size video the VTR lights the LED with the word "WIDE" on the front panel.

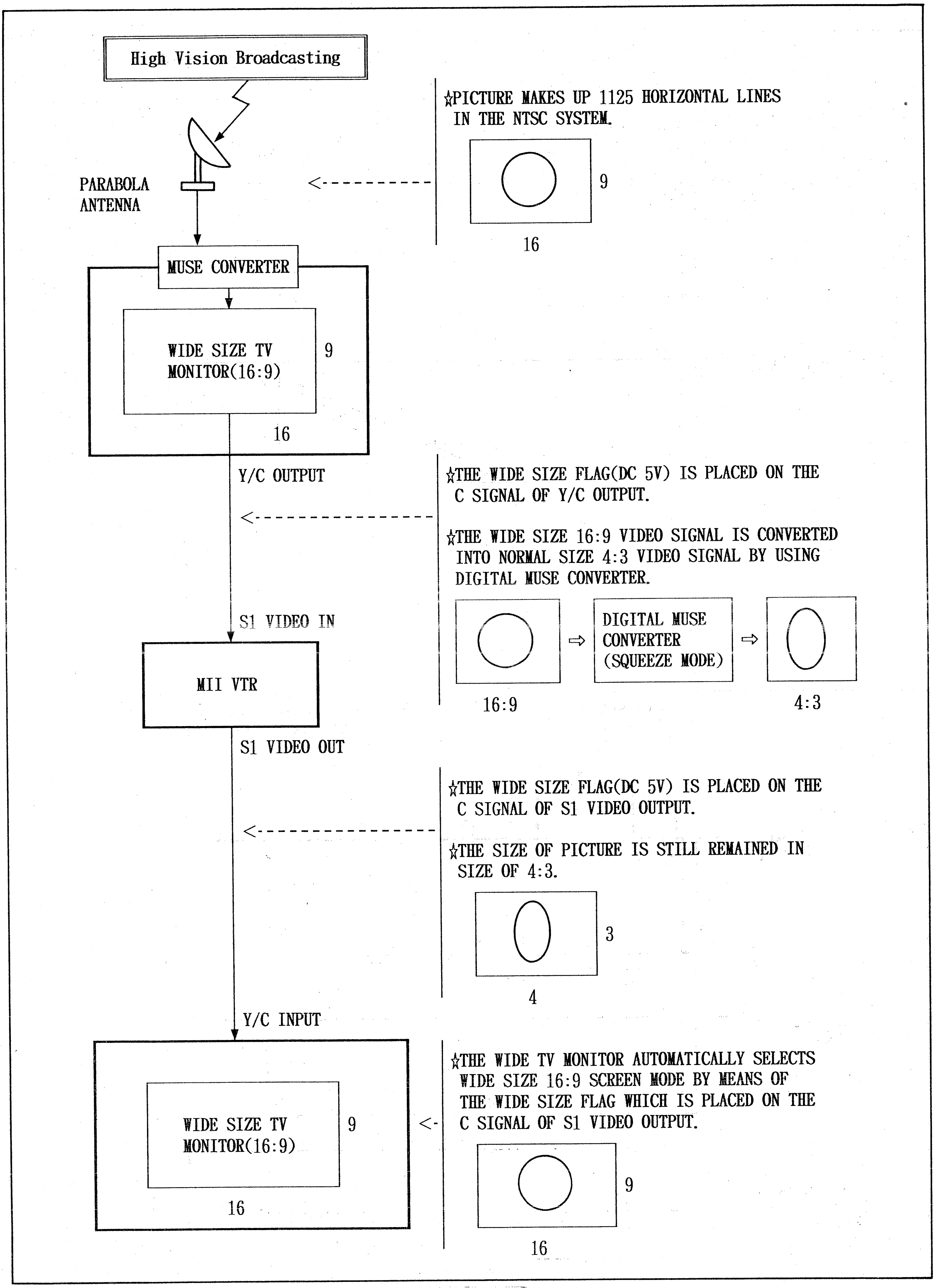

High Vision Broadcasting
PARABOLA ANTENNA
MUSE CONVERTER
WIDE SIZE TV MONITOR(16:9)
9
16
Y/C OUTPUT
S1 VIDEO IN
MII VTR
S1 VIDEO OUT
Y/C INPUT
WIDE SIZE TV MONITOR(16:9)
9
16
9
16
DIGITAL MUSE CONVERTER (SQUEEZE MODE)
16:9
4:3
3
4
9
16

☆PICTURE MAKES UP 1125 HORIZONTAL LINES IN THE NTSC SYSTEM.

☆THE WIDE SIZE FLAG(DC 5V) IS PLACED ON THE C SIGNAL OF Y/C OUTPUT.

☆THE WIDE SIZE 16:9 VIDEO SIGNAL IS CONVERTED INTO NORMAL SIZE 4:3 VIDEO SIGNAL BY USING DIGITAL MUSE CONVERTER.

☆THE WIDE SIZE FLAG(DC 5V) IS PLACED ON THE C SIGNAL OF S1 VIDEO OUTPUT.

☆THE SIZE OF PICTURE IS STILL REMAINED IN SIZE OF 4:3.

☆THE WIDE TV MONITOR AUTOMATICALLY SELECTS WIDE SIZE 16:9 SCREEN MODE BY MEANS OF THE WIDE SIZE FLAG WHICH IS PLACED ON THE C SIGNAL OF S1 VIDEO OUTPUT.

Figure 3-1. General of wide Size System.

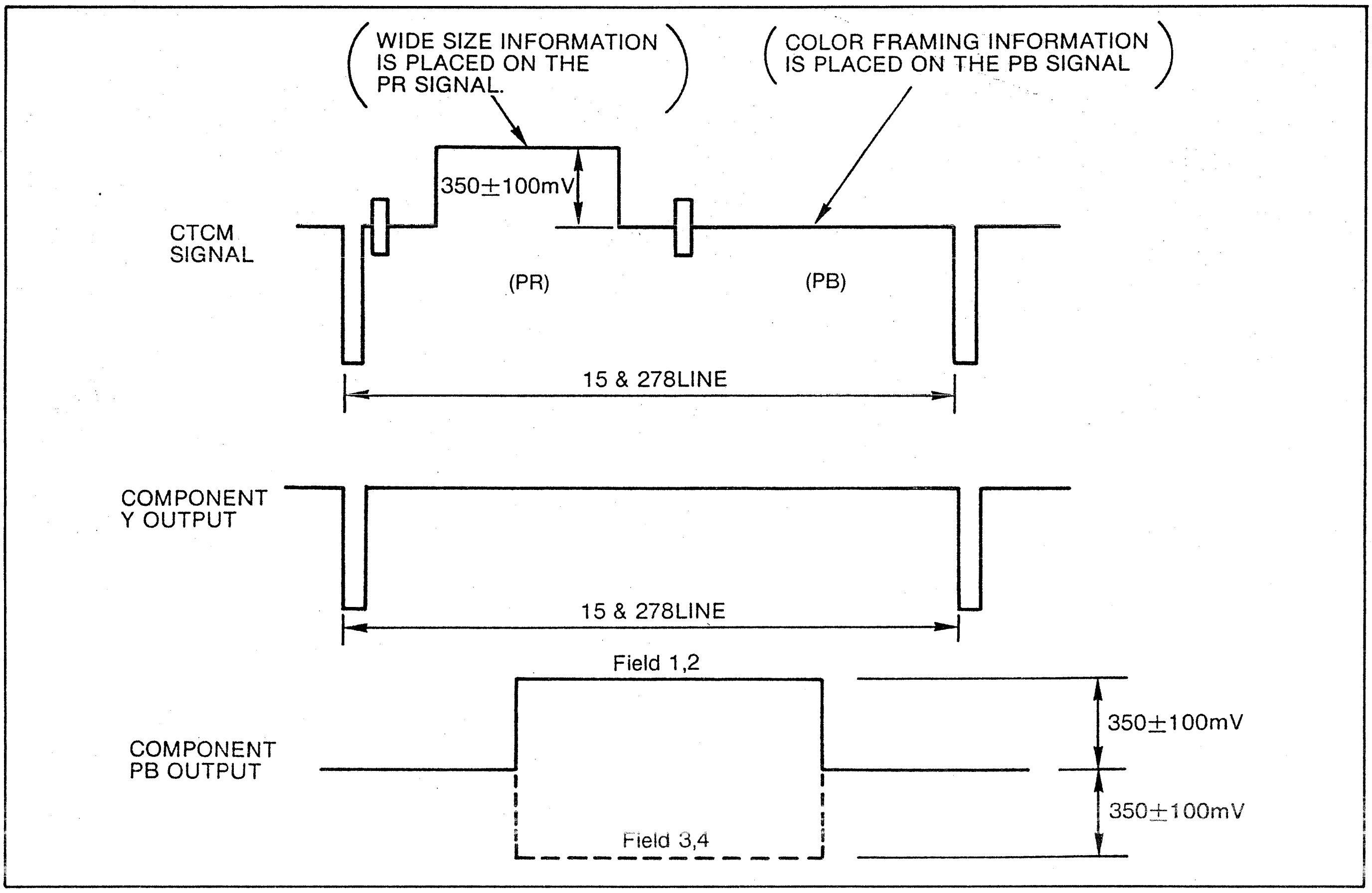
WIDE SIZE INFORMATION IS PLACED ON THE PR SIGNAL.
COLOR FRAMING INFORMATION IS PLACED ON THE PB SIGNAL
350±100mV
CTCM SIGNAL
(PR)
(PB)
15 & 278LINE
COMPONENT Y OUTPUT
15 & 278LINE
Field 1,2
COMPONENT PB OUTPUT
350±100mV
350±100mV
Field 3,4

Figure 3-2. Wide Size Flag(NTSC System)

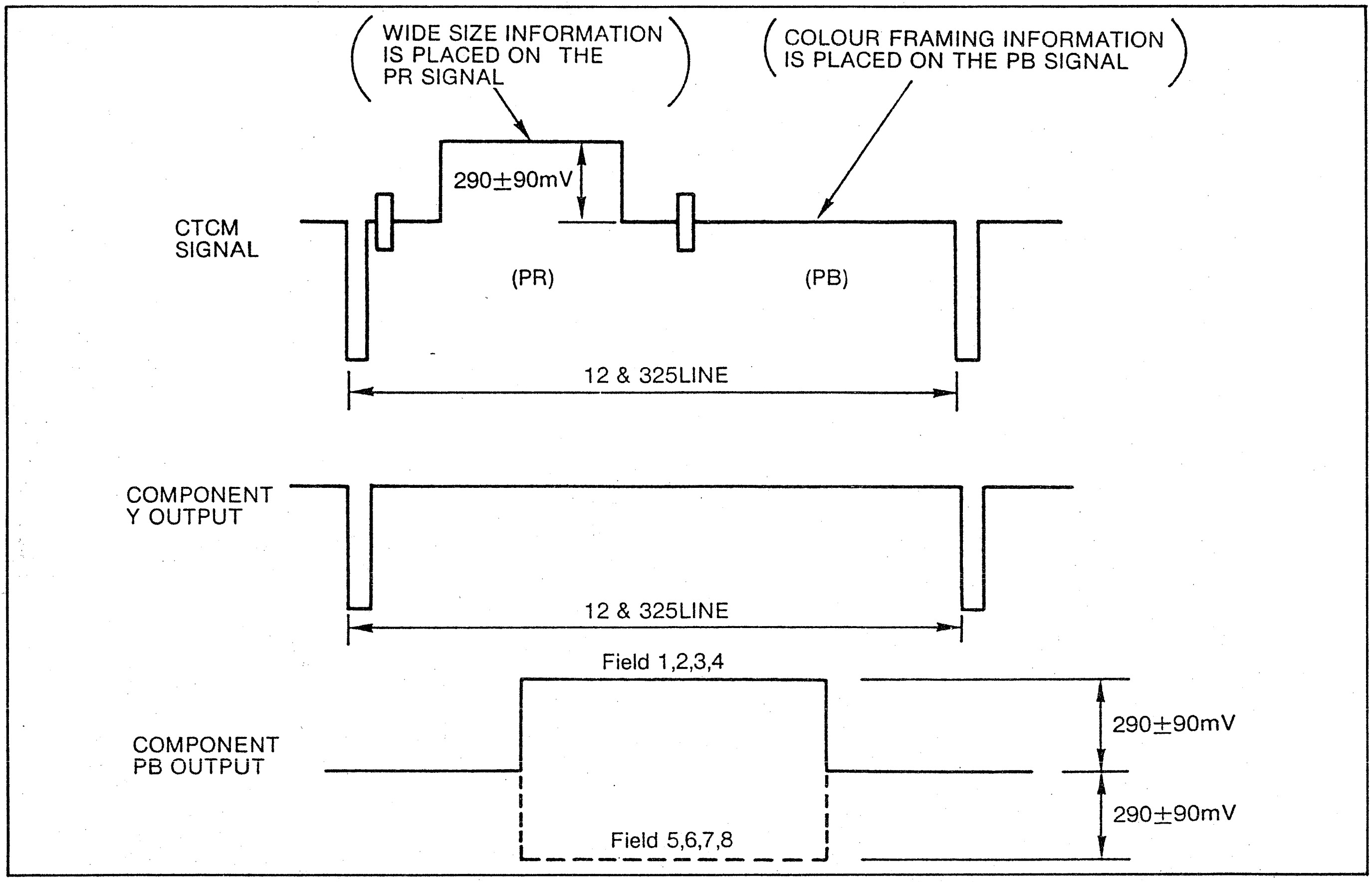
WIDE SIZE INFORMATION IS PLACED ON THE PR SIGNAL
COLOUR FRAMING INFORMATION IS PLACED ON THE PB SIGNAL
290±90mV
CTCM SIGNAL
(PR)
(PB)
12 & 325LINE
COMPONENT Y OUTPUT
12 & 325LINE
Field 1,2,3,4
COMPONENT PB OUTPUT
290±90mV
290±90mV
Field 5,6,7,8

Figure 3-3. Wide Size Flag(PAL System)

ELECTRICAL ADJUSTMENTS

This section covers the electrical adjustment.

Note:

1. Some preference switches are located on printed circuit boards within the unit. Be sure to turn off the power prior to opening the unit, before changing the position of any switch, and especially before removing or reinserting any circuit board.
2. Pre-heat the unit over two hours before the electrical adjustment.
3. After servicing and adjustment, see to it that all parts such as insulation barriers, insulators, shields, jumper wires, and witing harnesses are properly re-installed as originally found.

Panasonic

CONTENTS

SAFETY PRECAUTIONS 1

1. INFORMATION FOR ELECTRICAL ADJUSTMENT 2
1-1. MAIN ADJUSTMENT FLOWCHART 2
1-2. RECOMMENDED TEST AND SERVICE EQUIPMENT 3
1-3. SIGNAL GENERATOR CONNECTION METHOD & INPUT SELECT SWITCH SETTING (FOR ELECTRICAL ADJUSTMENT) 4

2. POWER SUPPLY UNIT

2-1. +5V ADJUSTMENT 5
2-2. +7.5V ADJUSTMENT 5

3. SYSTEM CONTROL (B1) BOARD

3-1. SUPER IMPOSE HORIZONTAL POSITION ADJUSTMENT 6

4. SERVO (W5) BOARD

SERVO SECTION (W5) FLOWCHART FOR AU-65H/AU-65 7
SERVO SECTION (W5) FLOWCHART FOR AU-63H/AU-63 8
SERVO SECTION (W5) FLOWCHART FOR AU-62H/AU-62 9

4-1. MACHINE CONDITION SETTING (1) 10
4-2. NEUTRAL VOLTAGE ADJUSTMENT 10
4-3. SUBLOADING VOLTAGE ADJUSTMENT 10
4-4. SUPPLY & TAKE-UP SENSOR VOLTAGE ADJUSTMENT 11
4-5. SUPPLY (FWD.) TENSION ADJUSTMENT 12
4-6. TAKE-UP (FWD.) TENSION ADJUSTMENT 13
4-7. SUPPLY (REV.) TENSION ADJUSTMENT 14
4-8. TAKE-UP (REV.) TENSION ADJUSTMENT 14
4-9. STARTING TORQUE ADJUSTMENT 15
4-10. SUB-LOADING TENSION ADJUSTMENT 15
4-11. LOADING & UNLOADING CONFIRMATION 16
4-12. FF TENSION ADJUSTMENT 16
4-13. REW TENSION ADJUSTMENT 17
4-14. MACHINE CONDITION SETTING (2) 17
4-15. OSCILLATION FREQUENCY ADJUSTMENT 18
4-16. CAPSTAN PHASE POSITION ADJUSTMENT (FOR AU-65H/AU-65) 18
4-17. CAPSTAN PHASE POSITION ADJUSTMENT (FOR AU-62H/AU-62) 19
4-18. CAPSTAN PHASE POSITION ADJUSTMENT (FOR AU-63H/AU-63) 19
4-19. TRACKING FIX ADJUSTMENT (FOR AU-65H/AU-65) 20
4-20. TRACKING FIX ADJUSTMENT (FOR AU-63H/AU-63) 20
4-21. TRACKING FIX ADJUSTMENT (FOR AU-62H/AU-62) 21
4-22. x1/32 SPEED ADJUSTMENT (1) 22
4-23. x1/32 SPEED ADJUSTMENT (2) 22
4-24. PG SHIFTER ADJUSTMENT (FOR AU-65H/62H AND AU-65/62) 23
4-25. PG SHIFTER ADJUSTMENT (FOR AU-63H/AU-63) 23
4-26. REC SHIFTER ADJUSTMENT (FOR AU-65H/AU-65) 24
4-27. DRUM PHASE FLUCTUATION CONFIRMATION (FOR AU-65H/AU-65) 24
4-28. DRUM PHASE FLUCTUATION CONFIRMATION (FOR AU-62H/63H AND AU-62/63) 25
4-29. CTL AMP CONFIRMATION (FOR AU-65H/AU-65) 25
4-30. CTL AMP CONFIRMATION (FOR AU-62H/63H AND AU-62/63) 26
4-31. CTL-RECOVER CIRCUIT OPERATING CONFIRMATION 26
4-32. 50 PIN PARALLEL REMOTE CAPSTAN OVERRIDE SYNCHRONIZATION ADJUSTMENT 27
4-33. SWITCHING POWER SOURCE ADJUSTMENT (WITH AT MODEL) 28
4-34. OFFSET ADJUSTMENT (1) (WITH AT MODEL) 28
4-35. OFFSET ADJUSTMENT (2) (WITH AT MODEL) 28
4-36. MACHINE CONDITION SETTING (3) (WITH AT MODEL) 29
4-37. CAPSTAN FG ADJUSTMENT (WITH AT MODEL) 29
4-38. CTL PHASE SHIFTER ADJUSTMENT (WITH AT MODEL) 30

4-39. X-VALUE ADJUSTMENT (WITH AT MODEL) 30
4-40. AT GAIN ADJUSTMENT (1) (WITH AT MODEL) 31
4-41. AT GAIN ADJUSTMENT (2) (WITH AT MODEL) 31
4-42. ENVELOPE INPUT LEVEL ADJUSTMENT (WITH AT MODEL) 32
4-43. AUTO TRACKING CONFIRMATION (WITH AT MODEL) 32

5. AUDIO (W6) BOARD (1/2)

LINEAR AUDIO SECTION (W6) FLOWCHART FOR AU-65H/AU-65 33
LINEAR AUDIO SECTION (W6) FLOWCHART FOR AU-63H/AU-63, AU-62H/AU-62 34
5-1. MACHINE CONDITION SETTING (FOR AU-65H/AU-65 LINEAR AUDIO) 35
5-2. DOLBY ENCODER LEVEL ADJUSTMENT (FOR AU-65H/AU-65) 35
5-3. E-E OUTPUT LEVEL ADJUSTMENT (FOR AU-65H/AU-65) 35
5-4. METER LEVEL ADJUSTMENT (FOR AU-65H/AU-65) 36
5-5. PLAYBACK EQ ADJUSTMENT (FOR AU-65H/AU-65) 36
5-6. PLAYBACK MASTER PHASE CONFIRMATION (FOR AU-65H/AU-65) 37
5-7. DOLBY DECODE LEVEL ADJUSTMENT (FOR AU-65H/AU-65) 37
5-8. PLAYBACK OUTPUT LEVEL ADJUSTMENT (FOR AU-65H/AU-65) 38
5-9. OSCILLATION RESONANCE POINT ADJUSTMENT (FOR AU-65H/AU-65) 38
5-10. AUDIO BIAS CURRENT ADJUSTMENT (FOR AU-65H/AU-65) 39
5-11. RECORDING EQUALIZER ADJUSTMENT (FOR AU-65H/AU-65) 40
5-12. RECORDING CURRENT ADJUSTMENT (FOR AU-65H/AU-65) 41
5-13. CH1 → CH2 CROSS TALK CANCEL ADJUSTMENT (FOR AU-65H/AU-65) 41
5-14. CH2 → CH1 CROSS TALK CANCEL ADJUSTMENT (FOR AU-65H/AU-65) 42
5-15. RECORDING PHASE ADJUSTMENT (FOR AU-65H/AU-65) 43
5-16. MACHINE CONDITION SETTING (FOR AU-63H/62H AND AU-63/62 LINEAR AUDIO) 44
5-17. PLAYBACK EQ CONFIRMATION (FOR AU-62H/63H AND AU-62/63) 44
5-18. PLAYBACK MASTER PHASE CONFIRMATION (FOR AU-62H/63H AND AU-62/63) 45
5-19. DOLBY DECODE LEVEL ADJUSTMENT (FOR AU-62H/63H AND AU-62/63) 45
5-20. PLAYBACK OUTPUT LEVEL ADJUSTMENT (FOR AU-62H/63H AND AU-62/63) 46
5-21. METER LEVEL ADJUSTMENT (FOR AU-62H/63H AND AU-62/63) 46

6. DECODER & CTCM BOARD (1/2) (FOR AU-65H/AU-65 ONLY)

DECODER & CTCM SECTION (1/2) (W4) FLOWCHART 47
6-1. SIGNAL SOURCE 48
6-2. NON-STANDARD PLL ADJUSTMENT (1) (FOR AU-65H/AU-65) 48
6-3. STANDARD PLL CONFIRMATION (FOR AU-65H/AU-65) 49
6-4. STANDARD PLL ADJUSTMENT (FOR AU-65H/AU-65) 49
6-5. NON-STANDARD PLL ADJUSTMENT (2) (FOR AU-65H/AU-65) 50
6-6. COMPONENT INPUT Y OUTPUT LEVEL CONFIRMATION (FOR AU-65H/AU-65) 50
6-7. CLAMP REFERENCE ADJUSTMENT 51
6-8. Pr A/D INPUT LEVEL ADJUSTMENT (FOR AU-65H/AU-65) 52
6-9. Y BURST LEVEL ADJUSTMENT (FOR AU-65H/AU-65) 53
6-10. CTCM LEVEL CONFIRMATION (FOR AU-65H/AU-65) 53
6-11. C BURST & SYNC LEVEL ADJUSTMENT (FOR AU-65H/AU-65) 54

7. MODULATION & DEMODULATION (W3) BOARD (1/2)

MODULATION & DEMODULATION SECTION (1/2) (W3) FLOWCHART FOR AU-65H/AU-65 55
MODULATION & DEMODULATION SECTION (1/2) (W3) FLOWCHART FOR AU-63H/AU-63 57
MODULATION & DEMODULATION SECTION (1/2) (W3) FLOWCHART FOR AU-62H/AU-62 59
7-1. Y PLAYBACK FM CARRIER LEVEL ADJUSTMENT 61
7-2. C PLAYBACK FM CARRIER LEVEL ADJUSTMENT 61
7-3. Y GROUP DELAY EQ CONFIRMATION OR ADJUSTMENT 62
7-4. C GROUP DELAY EQ CONFIRMATION OR ADJUSTMENT 62
7-5. Y TERM PRESET OR ADJUSTMENT 63
7-6. Y EQ 3 ADJUSTMENT 63
7-7. Y EQ 4 ADJUSTMENT 63
7-8. Y AUTO EQ DT VR PRESET 63
7-9. C PLAYBACK FM B.P.F. FREQUENCY RESPONSE ADJUSTMENT 64
7-10. Y DROP OUT DETECT BALANCE ADJUSTMENT 65
7-11. C DROP OUT DETECT BALANCE ADJUSTMENT 66

7-12. Y SUPER LIMITER PULSE POSITION ADJUSTMENT 67
7-13. C SUPER LIMITER PULSE POSITION ADJUSTMENT 67
7-14. Y NON-LINEAR DE-EMPHASIS LEVEL ADJUSTMENT 68
7-15. Y NON-LINEAR DE-EMPHASIS LIMITER LEVEL ADJUSTMENT (FOR AU-62H/63H AND AU-62/63) 68
7-16. C NON-LINEAR DE-EMPHASIS LEVEL ADJUSTMENT 69
7-17. C NON-LINEAR DE-EMPHASIS LIMITER LEVEL ADJUSTMENT (FOR AU-62H/63H AND AU-62/63) 69
7-18. Y DE-MODULATOR BALANCE ADJUSTMENT 70
7-19. C DE-MODULATOR BALANCE ADJUSTMENT 70
7-20. VIDEO CLIP ADJUSTMENT (FOR AU-65H/AU-65) 71
7-21. Y NON-LINEAR PRE-EMPHASIS LEVEL ADJUSTMENT (FOR AU-65H/AU-65) 71
7-22. VIDEO/SYNC METER ADJUSTMENT (FOR AU-65H/AU-65) 72
7-23. Y NON-LINEAR EMPHASIS LIMITER LEVEL ADJUSTMENT (FOR AU-65H/AU-65) 72
7-24. C NON-LINEAR PRE-EMPHASIS LEVEL ADJUSTMENT (FOR AU-65H/AU-65) 73
7-25. C NON-LINEAR LIMITER ADJUSTMENT (FOR AU-65H/AU-65) 73
7-26. Y FM DEVIATION ADJUSTMENT (FOR AU-65H/AU-65) 74
7-27. Y WHITE & DARK CLIP ADJUSTMENT (FOR AU-65H/AU-65) 75
7-28(A). Y MODULATOR BALANCE ADJUSTMENT (BY USING SPECTRUM ANALYZER) (FOR AU-65H/AU-65) 75
7-28(B). Y MODULATOR BALANCE ADJUSTMENT(BY USING OSCILLOSCOPE) (FOR AU-65H/AU-65) 76
7-29. Y DEVIATION CONFIRMATION (FOR AU-65H/AU-65) 76
7-30. C CLAMP PULSE POSITION ADJUSTMENT (FOR AU-65/AU-65) 77
7-31. C FM DEVIATION ADJUSTMENT (FOR AU-65H/AU-65) 78
7-32. C WHITE & DARK CLIP ADJUSTMENT (FOR AU-65H/AU-65) 79
7-33(A). C MODULATOR BALANCE ADJUSTMENT (BY USING SPECTRAM ANALYZER) (FOR AU-65H/AU-65) 79
7-33(B). C MODULATOR BALANCE ADJUSTMENT (BY USING OSCILLOSCOPE) (FOR AU-65H/AU-65) 80
7-34. C DEVIATION CONFIRMATION (FOR AU-65H/AU-65) 80
7-35(A). C REC FM B.P.F. FREQUENCY RESPONSE ADJUSTMENT (FACTORY ADJ.) (FOR AU-65H/AU-65) 81
7-35(B). C REC FM B.P.F. FREQUENCY RESPONSE ADJUSTMENT (FIELD ADJ.) (FOR AU-65H/AU-65) 81
7-36. Y NON LINEAR DE-EMPHASIS LIMITER LEVEL ADJUSTMENT (FOR AU-65H/AU-65) 82
7-37. C NON LINEAR DE-EMPHASIS LIMITER ADJUSTMENT (FOR AU-65H/AU-65) 82
7-38. Y PLAYBACK GROUP DELAY EQ ADJUSTMENT 83
7-39. Y PLAYBACK FREQUENCY RESPONSE ADJUSTMENT (COARSE) (FOR AU-62H/65H AND AU-62/65) 83
7-40. Y PLAYBACK FREQUENCY RESPONSE ADJUSTMENT (COARSE) (FOR AU-63H/AU63) 84
7-41. C PLAYBACK FREQUENCY RESPONSE ADJUSTMENT (COARSE) (FOR AU-62H/65H AND AU-62/65) 84
7-42. C PLAYBACK FREQUENCY RESPONSE ADJUSTMENT (COARSE) (FOR AU-63H/AU-63) 85
7-43. Y DEMOD OUTPUT DC LEVEL ADJUSTMENT 85
7-44. C DEMOD OUTPUT DC LEVEL ADJUSTMENT 86

8. TBC & SYNC GEN. (W1) BOARD (1/2)
TBC & SYNC GEN. SECTION (1/2) (W1) FLOWCHART FOR ALL MODELS 87
8-1. MACHINE CONDITION SETTING 88
8-2. S/H ADJUSTMENT 88
8-3. VCO ADJUSTMENT 17.7MHz 89
8-4. REF SCH DET ADJUSTMENT 89
8-5. REF SCH CONFIRMATION (BY USING AU-665) 90
8-6. SYSTEM PHASE ADJUSTMENT 91
8-7. SYSTEM H PHASE ADJUSTMENT 92
8-8. Y BURST SEP CIRCUIT ADJUSTMENT (COARSE) 93
8-9. Y BURST SEP CIRCUIT ADJUSTMENT (FINE) 93
8-10. C BURST SEP CIRCUIT ADJUSTMENT (COARSE) 94
8-11. C BURST SEP CIRCUIT ADJUSTMENT (FINE) 94
8-12. Y APC ADJUSTMENT (COARSE) 95
8-13. Y APC ADJUSTMENT (FINE) 95
8-14. C APC ADJUSTMENT (COARSE) 96
8-15. C APC ADJUSTMENT (FINE) 96
8-16. SEARCH VCO CONFIRMATION 97

8-17. Y D/A REFERENCE VOLTAGE ADJUSTMENT (1) 97
8-18. C D/A REFERENCE VOLTAGE ADJUSTMENT (2) 98
8-19. B-Y PHASE ADJUSTMENT 98
8-20. R-Y PHASE ADJUSTMENT 98

9. ENCODER (W2) BOARD (1/2)
ENCODER SECTION (1/2) (W2) FLOWCHART FOR ALL MODELS 99
9-1. MACHINE CONDITION SETTING 101
9-2. Y A/D PEDESTAL VOLTAGE ADJUSTMENT 101
9-3. C A/D PEDESTAL VOLTAGE ADJUSTMENT 102
9-4. Y A/D INPUT GAIN ADJUSTMENT 102
9-5. C A/D INPUT GAIN ADJUSTMENT 103
9-6. COMPOSITE SYNC LEVEL ADJUSTMENT 103
9-7. Y BLANKING DC VOLTAGE ADJUSTMENT 104
9-8. COMPONENT Y OUTPUT LEVEL ADJUSTMENT 104
9-9. COMPONENT Pb LEVEL ADJUSTMENT 105
9-10. ID PULSE ADJUSTMENT 105
9-11. COMPONENT Pr LEVEL ADJUSTMENT 106
9-12. VIDEO BLANKING DC ADJUSTMENT 106
9-13. VIDEO 2 OUTPUT LEVEL ADJUSTMENT 107
9-14. BURST ADJUSTMENT 107
9-15. VIDEO BURST LEVEL ADJUSTMENT 108
9-16. CARRIER LEAKAGE ADJUSTMENT 108
9-17. VIDEO OUTPUT VECTOR ADJUSTMENT 109
9-18. COMPONENT Y/C TIMING ADJUSTMENT 110
9-19. COMPOSITE Y/C TIMING ADJUSTMENT 111
9-20. VIDEO 1 OUTPUT LEVEL CONFIRMATION 111
9-21. Y/C OUT VECTOR ADJUSTMENT (1) 112
9-22. Y/C OUT VECTOR ADJUSTMENT (2) 113
9-23. VIDEO OUTPUT FREQUENCY RESPONSE ADJUSTMENT 113
9-24. Y OUTPUT FREQUENCY RESPONSE ADJUSTMENT 114
9-25. SUPERIMPOSE CHARACTER LEVEL ADJUSTMENT 114

10. TBC & SYNC GEN. (W1) BOARD (2/2)
TBC & SYNC GEN. SECTION (2/2) (W1) FLOWCHART FOR AU-65 115
TBC & SYNC GEN. SECTION (2/2) (W1) FLOWCHART FOR AU-63H/AU-63, AU-62H/AU-62 115
10-1. VIDEO PHASE ADJUSTMENT (FOR AU-65H/AU-65) 116
10-2. VIDEO PHASE ADJUSTMENT (FOR AU-63H/62H AND AU-63/62) 117
10-3. CK 2 PHASE ADJUSTMENT 118

11. ENCODER (W2) BOARD (2/2)
VISC CONTROL SECTION (2/2) (W2) FLOWCHART FOR ALL MODEL 119
11-1. MACHINE CONDITION SETTING 120
11-2. VISC PHASE ADJUSTMENT (1) 121
11-3. VISC DC ADJUSTMENT 122
11-4. REFERENCE VOLTAGE ADJUSTMENT 123
11-5. VISC PHASE ADJUSTMENT (2) 124
11-6. VISC ADJUSTMENT 126
11-7. VISC CONTROL CONFIRMATION 127

12. MODULATION & DEMODULATION (W3) BOARD (2/2)
MODULATION & DEMODULATION SECTION (2/2) (W3) FLOWCHART FOR AU-65H/AU-65 128
MODULATION & DEMODULATION SECTION (2/2) (W3) FLOWCHART FOR AU-63H/AU-63 130
MODULATION & DEMODULATION SECTION (2/2) (W3) FLOWCHART FOR AU-62H/AU-62 131
12-1. Y SYNC TIP FREQUENCY ADJUSTMENT (FOR AU-65H/AU-65) 132
12-2. C BLANKING FREQUENCY ADJUSTMENT (FOR AU-65H/AU-65) 133
12-3. Y PLAYBACK EQ2 ADJUSTMENT (FOR AU-62H/65H AND AU-62/65) 133
12-4. Y PLAYBACK EQ2 ADJUSTMENT (FOR AU-63H/AU-63) 134
12-5. Y PLAYBACK FREQUENCY RESPONSE (EQ1) ADJUSTMENT (FINE) 134

12-6. Y PLAYBACK EQ2, EQ1 CONFIRMATION 135
12-7. Y CH1 RECORDING CURRENT ADJUSTMENT (FOR AU-65H/AU-65) 136
12-8. Y CH2 RECORDING CURRENT ADJUSTMENT (FOR AU-65H/AU-65) 137
12-9. Y SELF RECORDING PLAYBACK FREQUENCY RESPONSE READJUSTMENT (FOR AU-65H/AU-65) 138
12-10. Y HF LINEARITY ADJUSTMENT (1) 139
12-11(A). C PLAYBACK EQ2 ADJUSTMENT (FOR AU-65H/62H AND AU-65/62) 140
12-11(B). C PLAYBACK FREQUENCY RESPONSE ADJUSTMENT (FINE) (FOR AU-65H/AU-65) 140
12-12(A). C PLAYBACK EQ2 ADJUSTMENT (FOR AU-63H/AU-63) 141
12-12(B). C PLAYBACK FREQUENCY RESPONSE ADJUSTMENT (FINE) (FOR AU-63H/AU-63) 141
12-13. C CH1 RECORDING CURRENT ADJUSTMENT (FOR AU-65H/AU-65) 142
12-14. C CH2 RECORDING CURRENT ADJUSTMENT (FOR AU-65H/AU-65) 143
12-15. C SELF RECORDING PLAYBACK FREQUENCY RESPONSE ADJUSTMENT (FOR AU-65H/AU-65) 144
12-16. Y PLAYBACK FM CARRIER LEVEL READJUSTMENT 145
12-17. C PLAYBACK FM CARRIER LEVEL READJUSTMENT 145
12-18. Y PLAYBACK RF LEVEL ADJUSTMENT (FINE) 146
12-19. C PLAYBACK RF LEVEL ADJUSTMENT (FINE) 146
12-20. Y DROP OUT DETECTION LEVEL ADJUSTMENT (FOR AU-65H/62H AND AU-65/62) 147
12-21. Y DROP OUT DETECTION LEVEL ADJUSTMENT (FOR AU-63H/AU-63) 148
12-22. C DROP OUT DETECTION LEVEL ADJUSTMENT (FOR AU-65H/62H AND AU-65/62) 149
12-23. C DROP OUT DETECTION LEVEL ADJUSTMENT (FOR AU-63H/AU-63) 150
12-24. TRACKING METER ADJUSTMENT 151
12-25. Y S/H PULSE ADJUSTMENT 151
12-26. Y 3.375MHz B.P.F. ADJUSTMENT 152
12-27. Y AUTO EQ FREQUENCY CHARACTERISTIC ADJUSTMENT (1) (FOR AU-65H/62H AND AU-65/62) 152
12-28. Y AUTO EQ FREQUENCY CHARACTERISTIC ADJUSTMENT (2) (FOR AU-63H/AU-63) 153
12-29. Y AUTO EQ V MODE CONFIRMATION 154
12-30. Y SELF RECORDING AUTO EQ FREQUENCY CHARACTERISTIC CONFIRMATION (FOR AU-65H/AU-65) 154
12-31. C S/H PULSE ADJUSTMENT 155
12-32. C AUTO EQ FREQUENCY CHARACTERISTIC ADJUSTMENT 156
12-33. C AUTO EQ V MODE CONFIRMATION 157
12-34. C SELF RECORDING AUTO EQ FREQUENCY CHARACTERISTIC CONFIRMATION (FOR AU-65H/AU-65) 158

13. DECODER & CTCM (W4) BOARD (2/2)

DECODER & CTCM SECTION (2/2) (W4) FLOWCHART FOR AU-65H/AU-65 159
13-1. OH CHROMA LEVEL ADJUSTMENT (AU-65H/AU-65) 161
13-2. RESET WIDTH ADJUSTMENT (FOR AU-65H/AU-65) 161
13-3. LINE INPUT Y FREQUENCY RESPONSE ADJUSTMENT (FINE) (FOR AU-65H/AU-65) 162
13-4. COMPONENT INPUT CARRIER BALANCE ADJUSTMENT (FINE) (FOR AU-65H/AU-65) 162
13-5. LINE INPUT CARRIER BALANCE ADJUSTMENT (FINE) (FOR AU-65H/AU-65) 163
13-6. 1H CHROMA LEVEL ADJUSTMENT (FOR AU-65H/AU-65) 163
13-7. CARRIER LEAKAGE ADJUSTMENT (FOR AU-65H/AU-65) 164
13-8. LINE INPUT CARRIER LEAKAGE ADJUSTMENT (FINE) (3) (FOR AU-65H/AU-65) 165
13-9(A). COMPONENT INPUT Y/C TIMING ADJUSTMENT (FINE) (BY USING WAVEFOME MONITOR) (FOR AU-65H/AU-65) 166
13-9(B). COMPONENT INPUT Y/C TIMING ADJUSTMENT (FINE) (BY USING OSCILLOSCOPE) (FOR AU-65H/AU-65) 167
13-10(A). LINE INPUT Y/C TIMING ADJUSTMENT (FINE) (BY USING WAVEFOME MONITOR) (FOR AU-65H/AU-65) 168
13-10(B). LINE INPUT Y/C TIMING ADJUSTMENT (FINE) (BY USING OSCILLOSCOPE) (FOR AU-65H/AU-65) 169
13-11. C SYNC POSITION ADJUSTMENT (FINE) (FOR AU-65H/AU-65) 170
13-12. LINE INPUT Y LEVEL ADJUSTMENT (FINE) (FOR AU-65H/AU-65) 171
13-13. Y/C INPUT Y LEVEL ADJUSTMENT (FINE) (FOR AU-65H/AU-65) 172
13-14. COMPONENT INPUT VECTOR ADJUSTMENT (FINE) (FOR AU-65H/AU-65) 173
13-15. LINE INPUT VECTOR ADJUSTMENT (FINE) (FOR AU-65H/AU-65) 174
13-16. Y/C INPUT VECTOR ADJUSTMENT (FINE) (FOR AU-65H/AU-65) 175

13-17. SCH ADJUSTMENT (FOR AU-65H/AU-65) 176
13-18. VISC PHASE ADJUSTMENT (FOR AU-65H/AU-65) 177
13-19. 13.5MHz PLL ADJUSTMENT (1) (FOR AU-65H/AU-65) 178
13-20. 13.5MHz PLL ADJUSTMENT (2) (FOR AU-65H/AU-65) 179
13-21. 13.5MHz PLL ADJUSTMENT (3) (FOR AU-65H/AU-65) 180

14. AUDIO (W6) BOARD (2/2)

FM AUDIO SECTION(W6)FLOWCHART FOR AU-65H/AU-65 181
FM AUDIO SECTION(W6)FLOWCHART FOR AU-63H/AU-63, AU-62H/AU-62 181
14-1. MACHINE CONDITION SETTING (FOR AU-65H/AU-65 FM AUDIO) 182
14-2. FM INPUT LEVEL ADJUSTMENT 182
14-3. FM E-E OUTPUT LEVEL ADJUSTMENT (FOR AU-65H/AU-65) 183
14-4. FM METER LEVEL ADJUSTMENT (FOR AU-65H/AU-65) 183
14-5. FM CARRIER ADJUSTMENT (FOR AU-65H/AU-65) 184
14-6(A). FM RECORDING CURRENT ADJUSTMENT (BY USING SPECTRUM ANALYZER) (FOR AU-65H/AU-65) 184
14-6(B). FM RECORDING CURRENT ADJUSTMENT (BY USING OSCILLOSCOPE) (FOR AU-65H/AU-65) 185
14-7. FM PLAYBACK LEVEL ADJUSTMENT (FOR AU-65H/AU-65) 186
14-8. FM PLAYBACK OUTPUT LEVEL ADJUSTMENT (FOR AU-65H/AU-65) 186
14-9. FM REC/PLAYBACK LEVEL CONFIRMATION (FOR AU-65H/AU-65) 187
14-10. MACHINE CONDITION SETTING (FOR AU-63H/62H AU-63/62 FM AUDIO) 187
14-11. FM CARRIER ADJUSTMENT (FOR AU-62H/63H AND AU-62/63) 188
14-12. FM PLAYBACK LEVEL ADJUSTMENT (FOR AU-62H/63H AND AU-62/63) 188
14-13. FM PLAYBACK OUTPUT LEVEL ADJUSTMENT (FOR AU-62H/63H AND AU-62/63) 189
14-14. FM METER LEVEL ADJUSTMENT (FOR AU-62H/63H AND AU-62/63) 189

15. FRONT PANEL BOARD (FOR AU-63H/62H/AU-63/62)

15-1. ALARM OSC & LEVEL ADJUSTMENT 190

16. SENC & P IN P BOARD (FOR AU-65H ONLY)

SENC & P IN P FLOWCHART 191
16-1. P IN P SC FREQUENCY ADJUSTMENT (FOR AU-65H) 192
16-2. P IN P CARRIER LEAKAGE ADJUSTMENT 192
16-3. P IN P VIDEO LEVEL ADJUSTMENT 193
16-4. P IN P Y LEVEL ADJUSTMENT 194
16-5. P IN P SUB PICTURE HUE ADJUSTMENT 194
16-6. P IN P SUB SCREEN CHROMA LEVEL ADJUSTMENT 195

17. TIME CODE GEN & READER (B2) BOARD (FOR AU-65H/63H/62H)

17-1. TRIMMER ADJUSTMENT 196

SAFETY PRECAUTIONS

GENERAL GUIDELINES

1. When servicing, observe the original lead dress. If a short circuit is found, replace all parts which have been overheated or damaged by the short circuit.
2. After servicing, see to it that all the protective devices such as insulation barriers, insulation papers shields are properly installed.
3. After servicing, make the following leakage current checks to prevent the customer from being exposed to shock hazards.

LEAKAGE CURRENT COLD CHECK

1. Unplug the AC cord and connect a jumper between the two prongs on the plug.
2. Measure the resistance value, with an ohm meter, between the jumpered AC plug and each exposed metallic cabinet part on the equipment such as screwheads connectors, control shafts,etc. When the exposed metallic part has a return path to the chassis, the reading should be between 1M ohm and 5.2 M ohm.

   When the exposed metal does not have a return path to the chassis, the reading must be ∞.

LEAKAGE CURRENT HOT CHECK

(See Figure 1)

1. Plug the AC cord directly into the AC outlet. Do not use an isolation transformer for this check.
2. Connect a 1.5k ohm, 10 watts resistor, in parallel with a 0.15uF capacitor, between each exposed metallic part on the set and a good earth ground such as a water pipe, as shown in Figure 1.
3. Use an AC voltmeter, with 1000 ohms/volt or more sensitivity, to measure the potential across the resistor.
4. Check each exposed metallic part, and measure the voltage at each point.
5. Reverse the AC plug in the AC outlet repeat each of the above measurements.
6. The potential at any point should not exceed 0.75 volts RMS. A leakage current tester (Simpson Model 229 equivalent) may be used to make the hot checks, leakage current must not exceed 1/2 milliamp. In case a measurement is outside of the limits specified, there is a possibility of a shock hazard, and the equipment should be repaired and rechecked before it is returned to the customer.

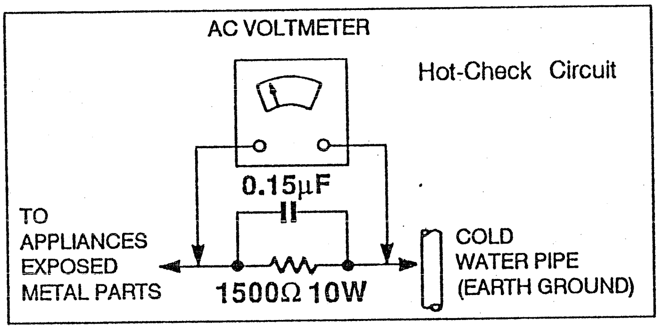
AC VOLTMETER
Hot-Check Circuit
0.15μF
TO APPLIANCES EXPOSED METAL PARTS
1500Ω 10W
COLD WATER PIPE (EARTH GROUND)

Figure 1

ELECTROSTATICALLY SENSITIVE (ES) DEVICES

Some semiconductor (solid state) devices can be damaged easily by static electricity. Such components commonly are called Electrostatically Sensitive (ES) Devices. Examples of typical ES devices are integrated circuits and some field-effect transistors and semiconductor chip components. The following techniques should be used to help reduce the incidence of component damage caused by static electricity.

1. Immediately before handling any semiconductor component or semiconductor-equipped assembly, drain off any electrostatic charge on your body by touching a known earth ground.

   Alternatively, obtain and wear a commercially available discharging wrist strap device, which should be removed for potential shock reasons prior to applying power to the unit under test.
2. After removing an electrical assembly equipped with ES devices, place the assembly on a conductive surface such as aluminum foil, to prevent electrostatic charge buildup or exposure of the assembly.
3. Use only a grounded-tip soldering iron to solder or unsolder ES devices.
4. Use only an anti-static solder removal device classified as anti-static can generate electrical charges sufficient to damage ES devices.
5. Do not use freon-propelled chemicals. These can generate electrical charges sufficient to damage ES devices.
6. Do not remove a replacement ES device from its protective package untilimmediately before you are ready to install it. (Most replacementES devices are packaged with leads eletcrically shorted together by conductive foam, aluminum foil or comparable conductive material).
7. Immediately before removing the protective material from the leads of replacement ES device, touch the protective material to the chassis or circuit assembly into which the device will be installed.

   CAUTION : Be sure no power is applied to the chassis or circuit, and observe all otner asfety precautions.
8. Minimize bodily motions when handling unpackaged replacement ES devices. (Otherwise harmless motion such as the brushing together of your clothes fabric or the lifting of your foot from a carpeted floor can generate static electricity sufficient to damage an ES device).

1. INFORMATION FOR ELECTRICAL ADJUSTMENT

This section describes adjustment procedures and methods of AU-65/63/62 and AU-65H/63H/62H. Refer to following information before electrical adjustments.

1-1. MAIN ADJUSTMENT FLOWCHART

1) This Electrical Adjustment Procedures are common for the following 6 models, they are AU-65/63/62 and AU-65H/63H/62H. THE correspond model is mentioned in the top of the each adjustment.

2) It is important to adjust each according to the correct steps which are shown as "Main Adjustment Flowchart" at below and "Section Adjustment Flowchart" at the top page of the each section.

MAIN ADJUSTMENT FLOWCHART

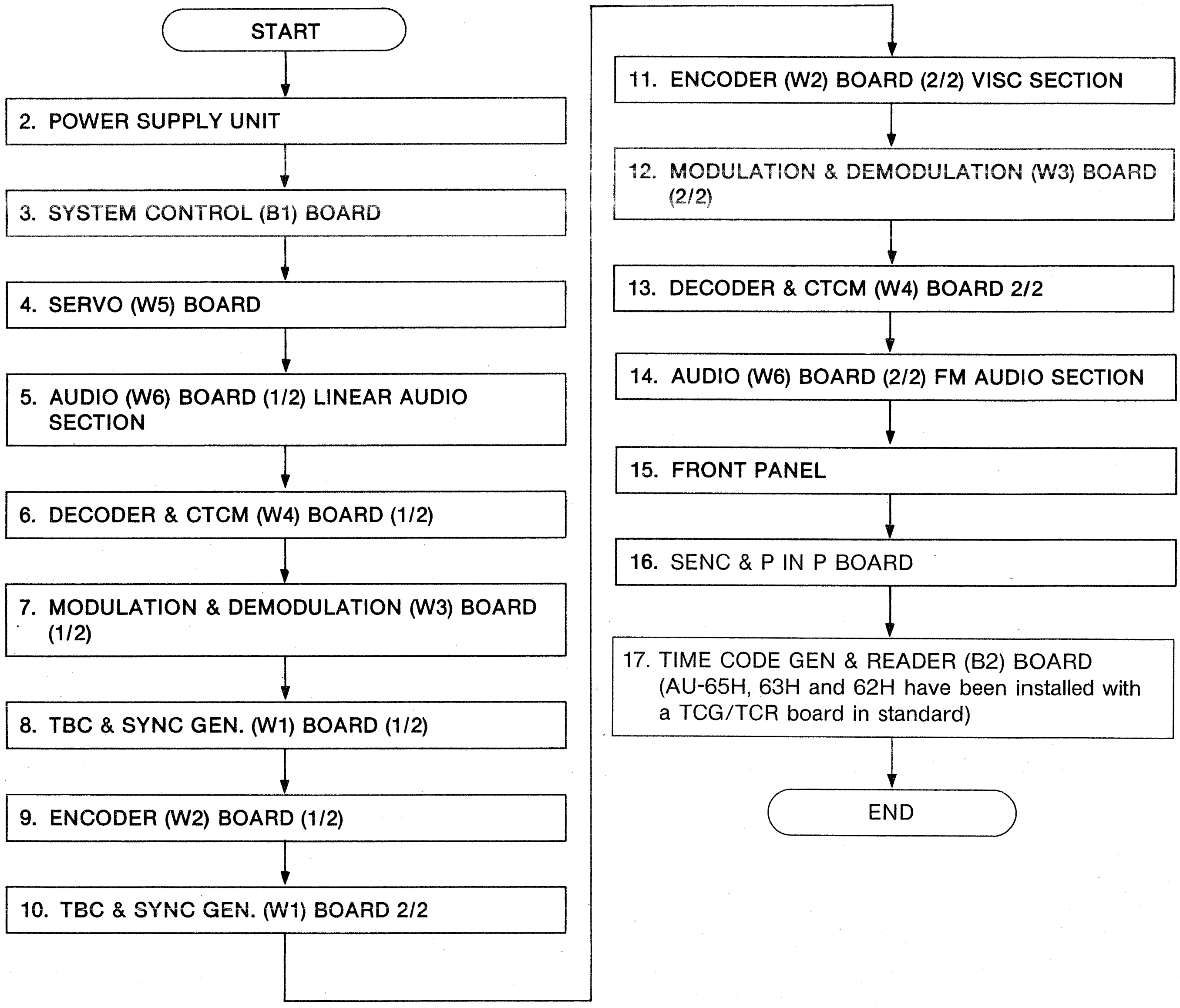
START
2. POWER SUPPLY UNIT
3. SYSTEM CONTROL (B1) BOARD
4. SERVO (W5) BOARD
5. AUDIO (W6) BOARD (1/2) LINEAR AUDIO SECTION
6. DECODER & CTCM (W4) BOARD (1/2)
7. MODULATION & DEMODULATION (W3) BOARD (1/2)
8. TBC & SYNC GEN. (W1) BOARD (1/2)
9. ENCODER (W2) BOARD (1/2)
10. TBC & SYNC GEN. (W1) BOARD 2/2
11. ENCODER (W2) BOARD (2/2) VISC SECTION
12. MODULATION & DEMODULATION (W3) BOARD (2/2)
13. DECODER & CTCM (W4) BOARD 2/2
14. AUDIO (W6) BOARD (2/2) FM AUDIO SECTION
15. FRONT PANEL
16. SENC & P IN P BOARD
17. TIME CODE GEN & READER (B2) BOARD (AU-65H, 63H and 62H have been installed with a TCG/TCR board in standard)
END

1-2. RECOMMENDED TEST AND SERVICE EQUIPMENT

PART NO.	NAME	REMARK
TSG-131 (※ 1) (OPTION 04)	COMPOSITE / COMPONENT / YC / Y CTCM SIGNAL GENERATOR	TEKTRONIX
1750	SCH METER (WFM, SCH, VECTOR etc.) FOR NTSC	TEKTRONIX
1751	SCH METER (WFM, SCH, VECTOR etc.) FOR PAL	TEKTRONIX
------	DIGITAL VOLT METER	————————
------	FREQUENCY COUNTER	1mHz Range ~
------	DUAL TRACE OSCILLOSCOPE	Frequency bandwidth more than 100 MHz
------	VTVM (ACVM) Frequency Band width 4Hz ~ 500KHz	Sound Technology or Audio Precision equivalent
------	SPECTRUM ANALYZER	Frequency bandwidth 10 Hz ~ 120 MHz
------	SINEWAVE SIGNAL GENERATOR	Frequency bandwidth 20 MHz
VFK0132	TENTELOMETER	TENTEL
VFM7089EAG (※ 2)	ALIGNMENT TAPE FOR NTSC MODEL	(Large cassette)
VFM7189EG (※ 2)	ALIGNMENT TAPE FOR PAL MODEL	(Large cassette)
ET-100YC	S-VIDEO/BNC ADAPTOR	————————
VFK0601	EXTENDER BOARD	FOR B1 AND B2 BOARDS
VFK0600	EXTENDER BOARD	FOR W1 TO W6 BOARDS

NOTE

※1. The TSG-131 Multiformat Signal Generator is mainly classified into four ranks by changing with the options. The option 01 and 04 are available for Panasonic MII VTR adjustment due to setting the video output to the Panasonic MII levels. Thus the option 01 is used for almost the electrical adjustments. The option 04 is recommended and used for all the electrical adjustments or precision measurements. The main differences between option 01 and 04 are listed as next.

a. The option 04 outputs CF (colour framing) signal.
b. The option 04 outputs composite sync signal.
c. The option 04 outputs VIR signal.

※2. Through the new alignment tape (Part No: VFM7189EG) is recommended for the electrical adjustments, the previous alignment tape (Part No: VFM7180EG) can also be used together with a one segment RF sweep alignment tape (Part No: VFM7104EG) instead of the new alignment tape.

1-3. SIGNAL GENERATOR CONNECTION METHOD & INPUT SELECT SWITCH SETTING (FOR ELECTRICAL ADJUSTMENT)

CONNECTION METHOD (FOR AU-65H)

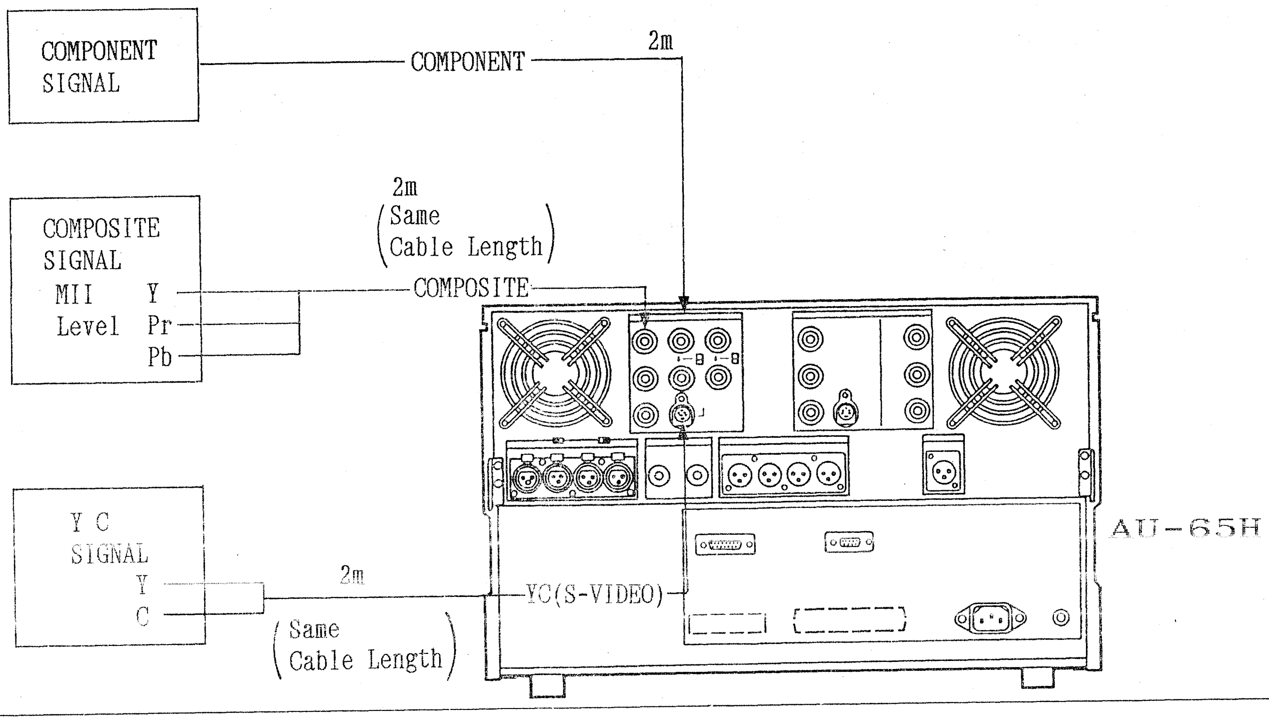
COMPONENT SIGNAL
COMPONENT
2m
COMPOSITE SIGNAL
MII Level
Y
Pr
Pb
2m
(Same Cable Length)
COMPOSITE
Y C SIGNAL
Y
C
2m
(Same Cable Length)
YC(S-VIDEO)
AU-65H

INPUT SELECT SWITCH SETTING (FOR AU-65H)

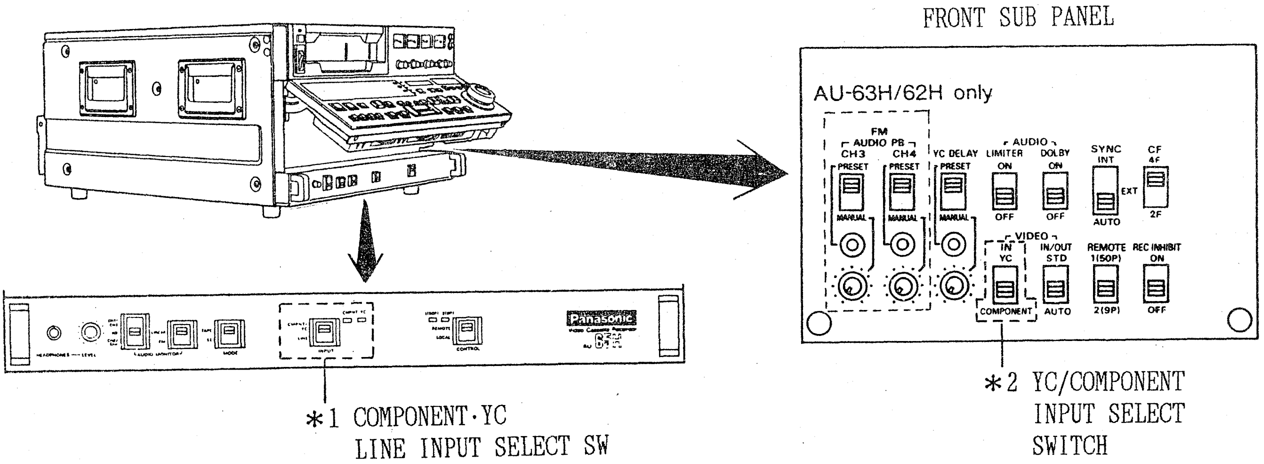
FRONT SUB PANEL
AU-63H/62H only
FM
AUDIO PB
CH3
CH4
PRESET
MANUAL
YC DELAY
AUDIO
LIMITER
DOLBY
ON
OFF
SYNC
INT
EXT
AUTO
CF
4F
2F
VIDEO
IN
YC
COMPONENT
IN/OUT
STD
AUTO
REMOTE
1(50P)
2(9P)
REC INHIBIT
ON
OFF
Panasonic
*1 COMPONENT·YC LINE INPUT SELECT SW
*2 YC/COMPONENT INPUT SELECT SWITCH

INPUT SIGNAL NAME	*1	*2
COMPOSITE	LINE POSITION	-----
COMPONENT	COMPONENT/YC POSITION	COMPONENT POSITION
Y C	COMPONENT/YC POSITION	YC POSITION

2. POWER SUPPLY UNIT

(POWER UNIT)

2-1. +5V ADJUSTMENT

TEST POINT	MODE	TAPE USED	M.EQ.	INPUT SIGNAL	ADJUSTMENT
TP19 (on W5)	REC (AU-65H/65) PLAY (AU-62H/63H /62/63)	BLANK TAPE	Digital Voltage Meter	----------	R81 (+5V) (Top Panel of the Power Supply Box)

Step 1.

1. Adjust R81 so that the voltage at TP19 is +5 ± 0.2V (DC).

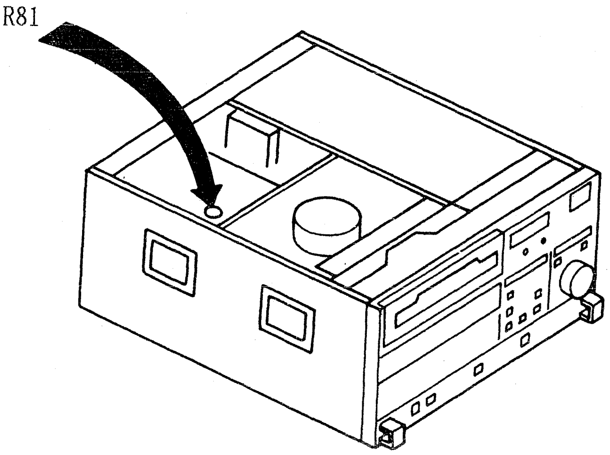

2-2. +7.5V ADJUSTMENT

(POWER UNIT)

TEST POINT	MODE	TAPE USED	M.EQ.	INPUT SIGNAL	ADJUSTMENT
CP53-3 (+7.5V OUTPUT)	------	-------	VOLTAGE METER	----------	R122 (+7.5)

Note:
This adjustment is done after repairing this power unit only.

Step 1.

1. Connect the Power Unit in outside of VTR.
2. Adjust R122 so that the voltage at CP53-3 (+7.5V output connector on the power unit) is 8.2 ± 0.002V.

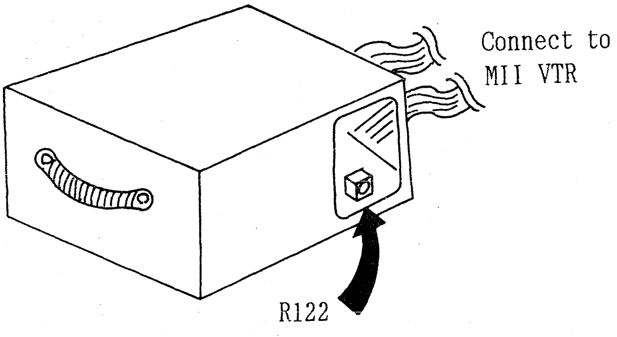

Specification
+7.5V terminal = 8.2 ± 0.002V
(8.2 = 7.5 + 10%)

3. SYSTEM CONTROL (B1) BOARD

3-1. SUPER IMPOSE HORIZONTAL POSITION ADJUSTMENT

(B1 SYSTEM CONTROL)

TEST POINT	MODE	TAPE USED	M.EQ.	INPUT SIGNAL	ADJUSTMENT
VIDEO 3 OUT	E - E	-------	MONITOR TV	----------	VC1 (SUPER POSITION)

1. Open the Front Panel and press the MENU SW (SW3) on the System Control (B1) Board.
2. Adjust VC1 so that the MENU Picture is in the centre of the monitor screen.

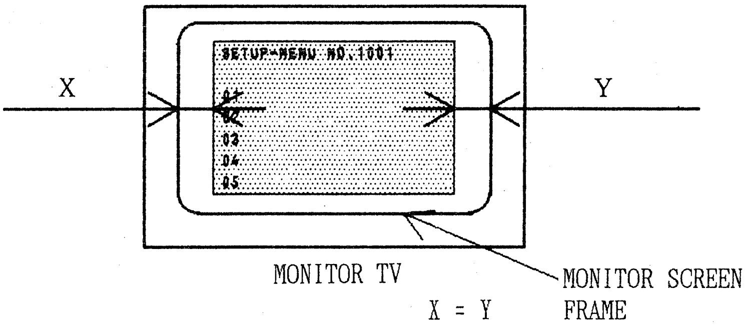
SETUP-MENU NO.1001
01
02
03
04
05
X
Y
MONITOR TV
X = Y
MONITOR SCREEN FRAME

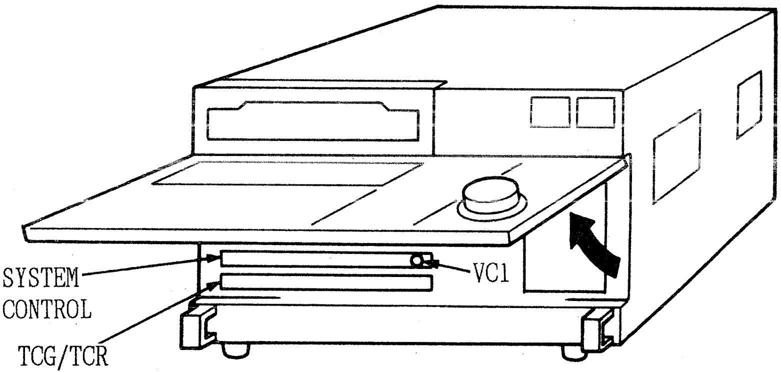
SYSTEM CONTROL
TCG/TCR
VC1

FRONT VIEW

4. SERVO (W5) BOARD

SERVO SECTION (W5) FLOWCHART FOR AU-65H/AU-65

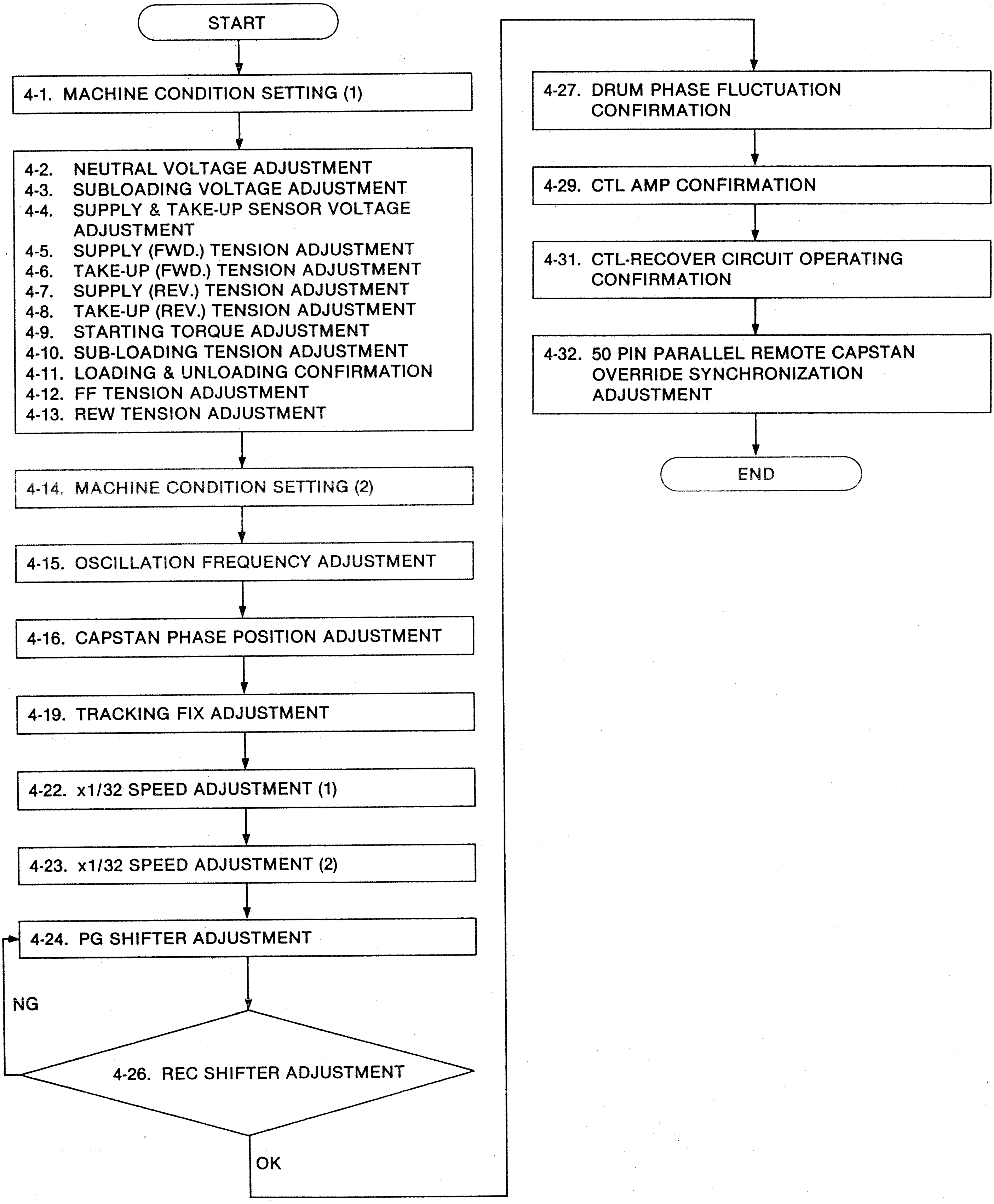
START
4-1. MACHINE CONDITION SETTING (1)
4-2. NEUTRAL VOLTAGE ADJUSTMENT
4-3. SUBLOADING VOLTAGE ADJUSTMENT
4-4. SUPPLY & TAKE-UP SENSOR VOLTAGE ADJUSTMENT
4-5. SUPPLY (FWD.) TENSION ADJUSTMENT
4-6. TAKE-UP (FWD.) TENSION ADJUSTMENT
4-7. SUPPLY (REV.) TENSION ADJUSTMENT
4-8. TAKE-UP (REV.) TENSION ADJUSTMENT
4-9. STARTING TORQUE ADJUSTMENT
4-10. SUB-LOADING TENSION ADJUSTMENT
4-11. LOADING & UNLOADING CONFIRMATION
4-12. FF TENSION ADJUSTMENT
4-13. REW TENSION ADJUSTMENT
4-14. MACHINE CONDITION SETTING (2)
4-15. OSCILLATION FREQUENCY ADJUSTMENT
4-16. CAPSTAN PHASE POSITION ADJUSTMENT
4-19. TRACKING FIX ADJUSTMENT
4-22. x1/32 SPEED ADJUSTMENT (1)
4-23. x1/32 SPEED ADJUSTMENT (2)
4-24. PG SHIFTER ADJUSTMENT
NG
4-26. REC SHIFTER ADJUSTMENT
OK
4-27. DRUM PHASE FLUCTUATION CONFIRMATION
4-29. CTL AMP CONFIRMATION
4-31. CTL-RECOVER CIRCUIT OPERATING CONFIRMATION
4-32. 50 PIN PARALLEL REMOTE CAPSTAN OVERRIDE SYNCHRONIZATION ADJUSTMENT
END

SERVO SECTION (W5) FLOWCHART FOR AU-63H/AU-63

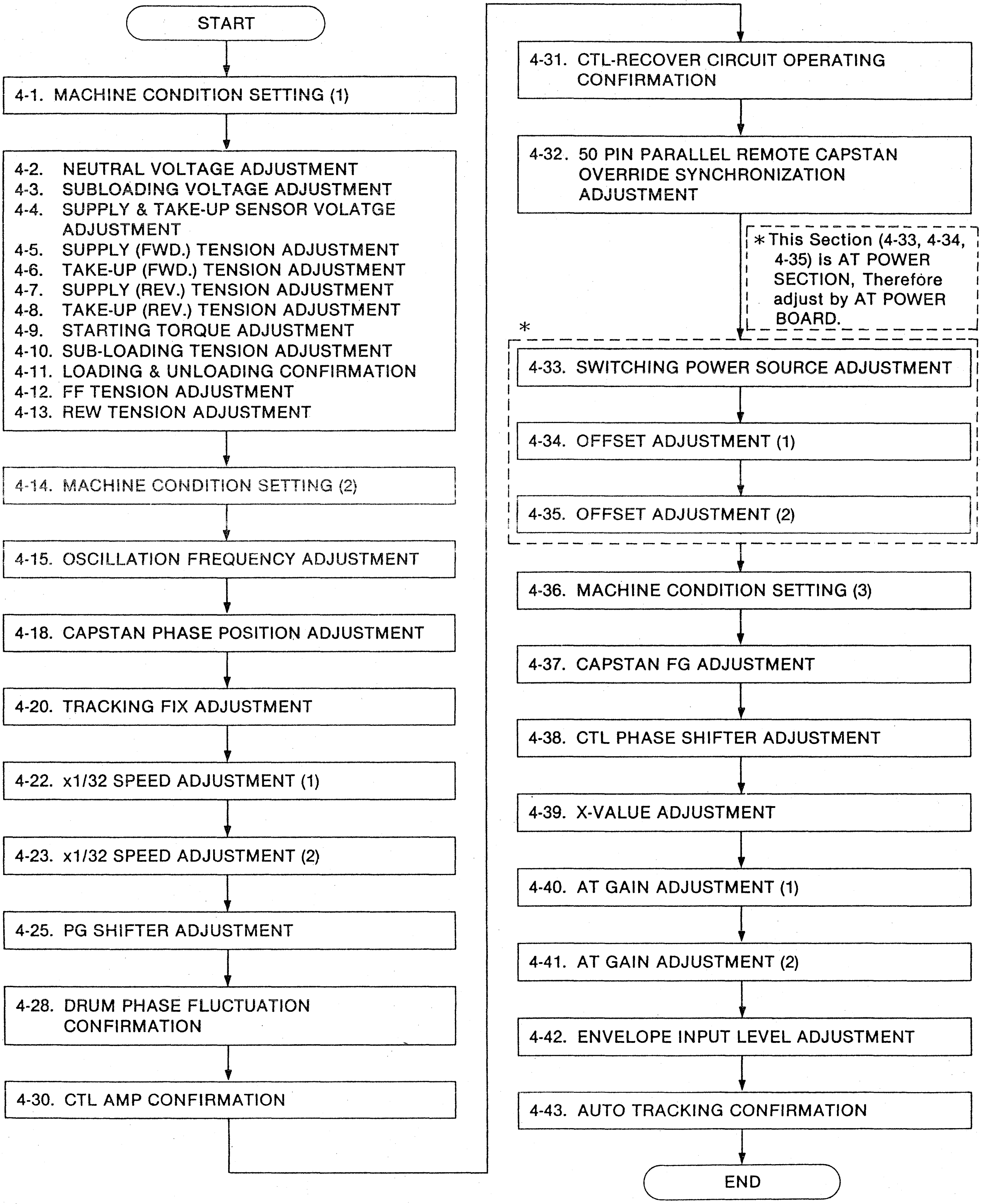
START
4-1. MACHINE CONDITION SETTING (1)
4-2. NEUTRAL VOLTAGE ADJUSTMENT
4-3. SUBLOADING VOLTAGE ADJUSTMENT
4-4. SUPPLY & TAKE-UP SENSOR VOLATGE ADJUSTMENT
4-5. SUPPLY (FWD.) TENSION ADJUSTMENT
4-6. TAKE-UP (FWD.) TENSION ADJUSTMENT
4-7. SUPPLY (REV.) TENSION ADJUSTMENT
4-8. TAKE-UP (REV.) TENSION ADJUSTMENT
4-9. STARTING TORQUE ADJUSTMENT
4-10. SUB-LOADING TENSION ADJUSTMENT
4-11. LOADING & UNLOADING CONFIRMATION
4-12. FF TENSION ADJUSTMENT
4-13. REW TENSION ADJUSTMENT
4-14. MACHINE CONDITION SETTING (2)
4-15. OSCILLATION FREQUENCY ADJUSTMENT
4-18. CAPSTAN PHASE POSITION ADJUSTMENT
4-20. TRACKING FIX ADJUSTMENT
4-22. x1/32 SPEED ADJUSTMENT (1)
4-23. x1/32 SPEED ADJUSTMENT (2)
4-25. PG SHIFTER ADJUSTMENT
4-28. DRUM PHASE FLUCTUATION CONFIRMATION
4-30. CTL AMP CONFIRMATION
4-31. CTL-RECOVER CIRCUIT OPERATING CONFIRMATION
4-32. 50 PIN PARALLEL REMOTE CAPSTAN OVERRIDE SYNCHRONIZATION ADJUSTMENT
*This Section (4-33, 4-34, 4-35) is AT POWER SECTION, Therefore adjust by AT POWER BOARD.
*
4-33. SWITCHING POWER SOURCE ADJUSTMENT
4-34. OFFSET ADJUSTMENT (1)
4-35. OFFSET ADJUSTMENT (2)
4-36. MACHINE CONDITION SETTING (3)
4-37. CAPSTAN FG ADJUSTMENT
4-38. CTL PHASE SHIFTER ADJUSTMENT
4-39. X-VALUE ADJUSTMENT
4-40. AT GAIN ADJUSTMENT (1)
4-41. AT GAIN ADJUSTMENT (2)
4-42. ENVELOPE INPUT LEVEL ADJUSTMENT
4-43. AUTO TRACKING CONFIRMATION
END

SERVO SECTION (W5) FLOWCHART FOR AU-62H/AU-62

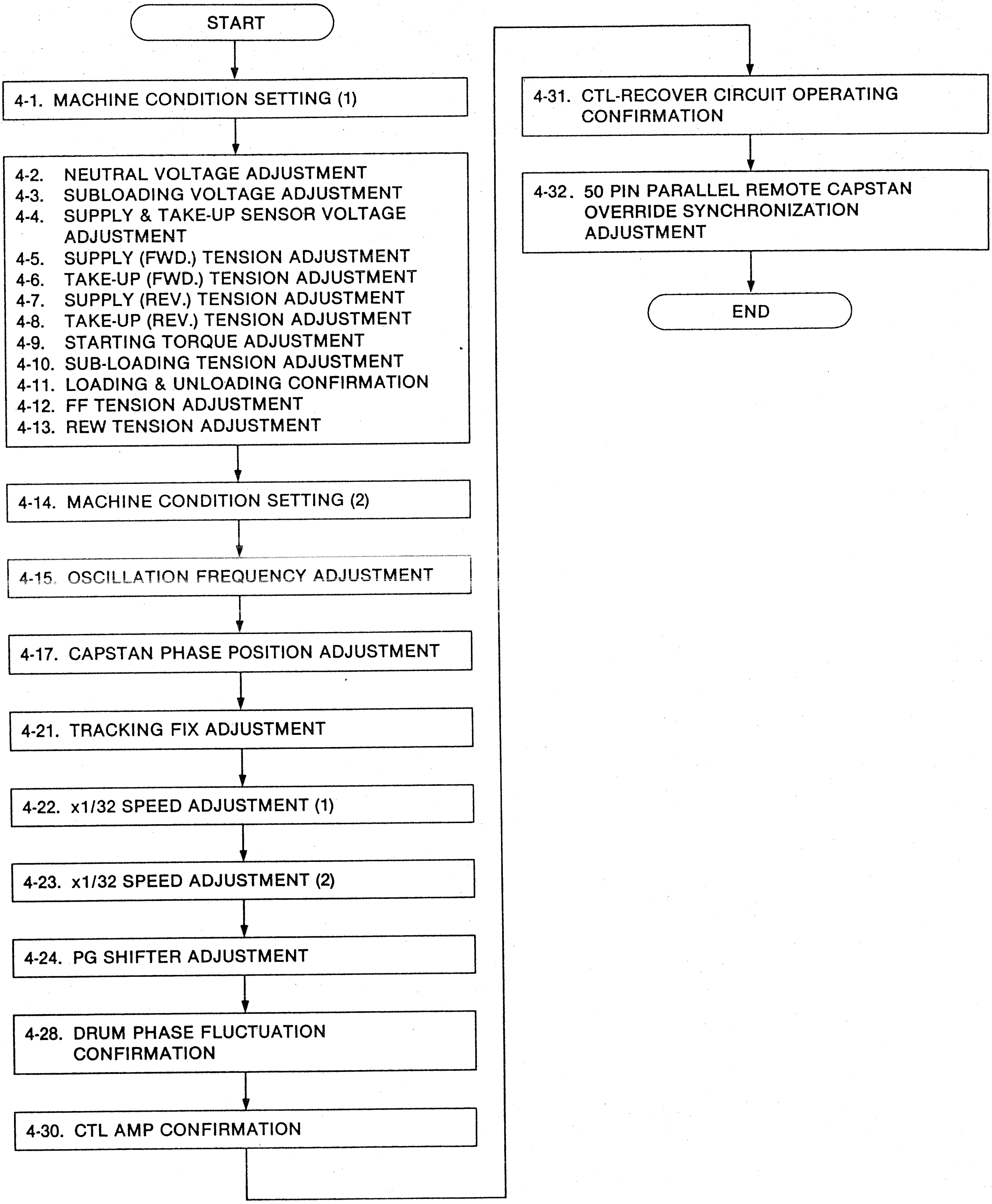
START
4-1. MACHINE CONDITION SETTING (1)
4-2. NEUTRAL VOLTAGE ADJUSTMENT
4-3. SUBLOADING VOLTAGE ADJUSTMENT
4-4. SUPPLY & TAKE-UP SENSOR VOLTAGE ADJUSTMENT
4-5. SUPPLY (FWD.) TENSION ADJUSTMENT
4-6. TAKE-UP (FWD.) TENSION ADJUSTMENT
4-7. SUPPLY (REV.) TENSION ADJUSTMENT
4-8. TAKE-UP (REV.) TENSION ADJUSTMENT
4-9. STARTING TORQUE ADJUSTMENT
4-10. SUB-LOADING TENSION ADJUSTMENT
4-11. LOADING & UNLOADING CONFIRMATION
4-12. FF TENSION ADJUSTMENT
4-13. REW TENSION ADJUSTMENT
4-14. MACHINE CONDITION SETTING (2)
4-15. OSCILLATION FREQUENCY ADJUSTMENT
4-17. CAPSTAN PHASE POSITION ADJUSTMENT
4-21. TRACKING FIX ADJUSTMENT
4-22. x1/32 SPEED ADJUSTMENT (1)
4-23. x1/32 SPEED ADJUSTMENT (2)
4-24. PG SHIFTER ADJUSTMENT
4-28. DRUM PHASE FLUCTUATION CONFIRMATION
4-30. CTL AMP CONFIRMATION
4-31. CTL-RECOVER CIRCUIT OPERATING CONFIRMATION
4-32. 50 PIN PARALLEL REMOTE CAPSTAN OVERRIDE SYNCHRONIZATION ADJUSTMENT
END

4. SERVO (W5) BOARD

4-1. MACHINE CONDITION SETTING (1)

1. When the Cassette Compartment is removed, the following conditions are required.
   1) Connect a jumper wire between TP19 and TP20 on the Servo (W5) Board to prevent a tape slack.
   2) Use the Dummy Plug (1) (VFK0361) to place the unit in the Loading Completion Mode.
2. SYNC SELECT (on Front Sub Panel) : AUTO Side

4-2. NEUTRAL VOLTAGE ADJUSTMENT

(W5 SERVO)

TEST POINT	MODE	TAPE USED	M.EQ.	INPUT SIGNAL	ADJUSTMENT
TP303 TP304	EJECT	-------	Digital Voltage Meter	----------	VR302 (S TENSION FIX) VR303 (T TENSION FIX)

∗Note:
Set the D.V.M to the mV range so you can read the ± voltage.

⊘ VR302 TP303 = 2.5 ± 0.10V (DC)

⊘ VR303 TP304 = 2.5 + 0.05 / -0.15V (DC)

4-3. SUBLOADING VOLTAGE ADJUSTMENT

(W5 SERVO)

TEST POINT	MODE	TAPE USED	M.EQ.	INPUT SIGNAL	ADJUSTMENT
TP312	EJECT	-------	Digital Voltage Meter	----------	VR308 (SUB LOAD VOLTAGE)

∗Note:
Set the D.V.M. to the mV range so you can read the ± voltage.

SPECIFICATION : 35 ± 1mV

4-4. SUPPLY & TAKE-UP SENSOR VOLTAGE ADJUSTMENT

(W5 SERVO)

TEST POINT	MODE	TAPE USED	M.EQ.	INPUT SIGNAL	ADJUSTMENT
TP303 TP304	EJECT ↓ STOP (LOADING)	-------	Digital Voltage Meter	----------	S & T MAGNETIC SENSOR BASE UNITS

Step 1. MACHINE CONDITION	1. Remove the Cassette Compartment. 2. Refer to Set Up Conditions at the beginning of this SECTION (SERVO - W5 Machine Condition 4-1).
Step 2 1. Place the Mechanical Neutral Plate on the chassis and move it slightly down (A) and to hight (B), to adjust the backlash as shown in the figure.	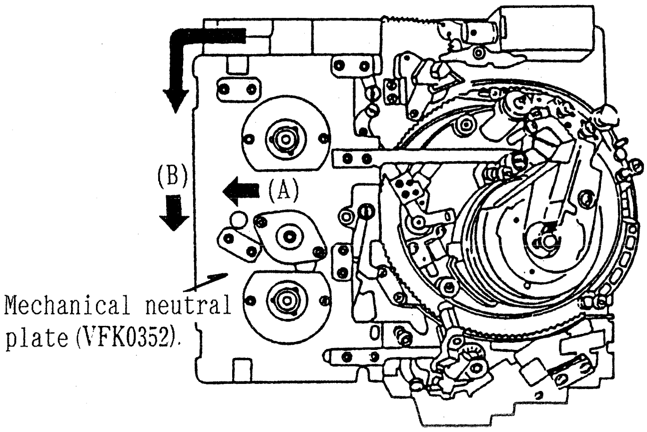 (B) (A) Mechanical neutral plate (VFK0352).
Step 3. 1. D. V. M. : TP303 2. Confirm the DC voltage is 2500mV (2.5V) ± 50mV (DC). 3. If it is not, loosen the 2 screws and insert the eccentric screw driver into Hole (B). 4. Adjust the Supply Magnetic Sensor Base Unit so that the DC voltage is 2500mV (2.5V) ± 50mV (DC).	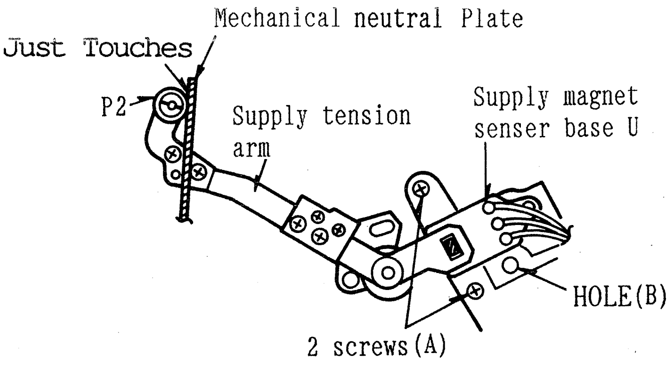 Mechanical neutral Plate Just Touches P2 Supply tension arm Supply magnet senser base U HOLE(B) 2 screws(A)
Step 4. 1. D. V. M. : TP304 2. Confirm the DC voltage is 2500mV (2.5V) ± 50mV (DC). 3. If it is not, insert the eccentric screw driver into Hole (B). 4. Adjust the Take-up Magnetic Sensor Base Unit so that the DC voltage is 2500mV (2.5V) ± 50mV (DC).	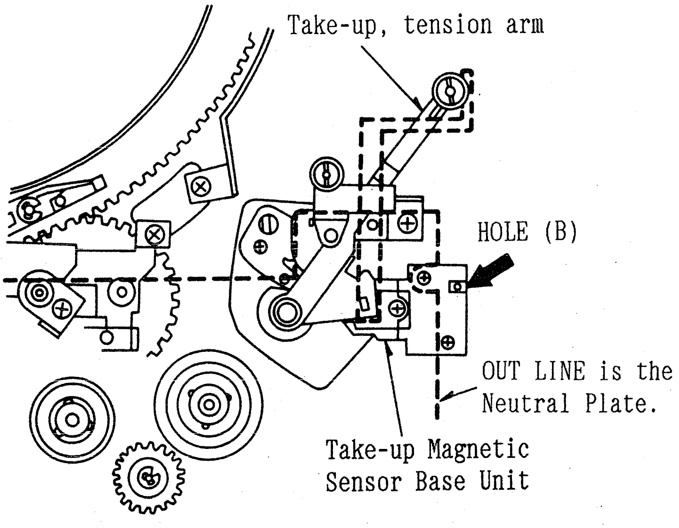 Take-up, tension arm HOLE (B) OUT LINE is the Neutral Plate. Take-up Magnetic Sensor Base Unit

4-5. SUPPLY (FWD.) TENSION ADJUSTMENT

(W5 SERVO)

TEST POINT	MODE	TAPE USED	M.EQ.	INPUT SIGNAL	ADJUSTMENT
"A" (P1 ~ P2)	PLAY	BLANK 90 min. TAPE BEGINNING PORTION	TENSION METER	----------	SUPPLY STOPPER PIN BASE UNIT

Step 1.
MACHINE CONDITION

1. Remove the Cassette Compartment.
2. Refer to Set Up Conditions at the beginning of this SECTION (SERVO - W5 Machine Condition 4-1).

Step 2.
Calibration of Tentelometer

1. Before performing the tape tension adjustment. The Tension Meter should be checked as follows.
2. Use MII Metal Tape and a 1 ounce weight.
3. Pull up a tape by hand as shown in the figure.
4. Adjust the hex screw on the Tension Meter so that the tension meter reads 1 ounce.

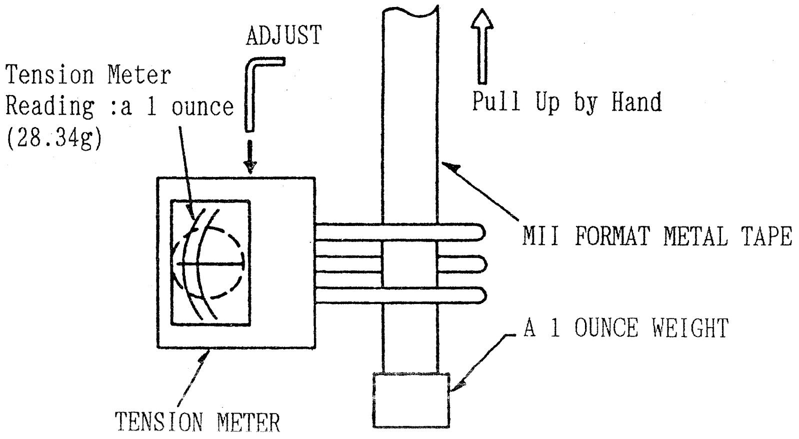
ADJUST
Tension Meter
Reading :a 1 ounce
(28.34g)
Pull Up by Hand
MII FORMAT METAL TAPE
A 1 OUNCE WEIGHT
TENSION METER

Step 3.
1. Insert the tension meter to Portion "A" that is between P1 post and P2 post.
2. Mode : PLAY
3. Set the tension for "A" = 23g ± 2g.

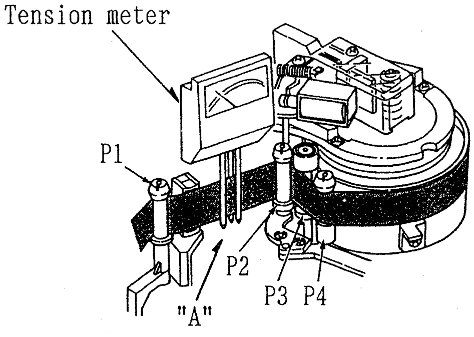
Tension meter
P1
P2
"A"
P3 P4

A = 23g ± 2g

Step 4.
1. If it is not within specification, loosen the screw (A) and place mechanism in the loading condition.
2. Insert the eccentric screw driver into Hole (B).
3. Adjust the position of S. Stopper Pin Base Unit so that the tension is 23g ± 2g at portion "A".
4. Before tightening the screw (A), place mechanism in the unloading condition and then tighten the screw (A) while pushing the S.Stopper pin base unit in arrow (C) as shown in Figure.
5. Reconfirm the tension after the screw (A) is tightened.

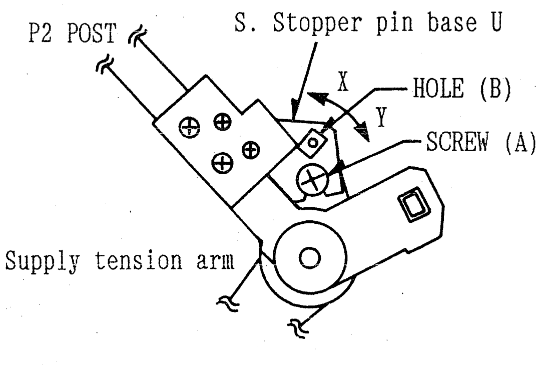
P2 POST
S. Stopper pin base U
X
Y
HOLE (B)
SCREW (A)
Supply tension arm

4-6. TAKE-UP (FWD.) TENSION ADJUSTMENT

(W5 SERVO)

TEST POINT	MODE	TAPE USED	M.EQ.	INPUT SIGNAL	ADJUSTMENT
"A" (P9 ~ P10)	PLAY	BLANK 90 min. TAPE BEGINNING PORTION	TENSION METER	----------	TAKE-UP STOPPER PIN BASE UNITS

Step 1.
MACHINE CONDITION

1. Remove the Cassette Compartment.
2. Refer to Set Up Conditions at the beginning of this SECTION (SERVO - W5 Machine Condition 4-1).

Step 2.

1. Insert the tension meter to Portion "A" that is between P9 post and P10 post.
2. Mode : PLAY
3. Confirm that the tension meter indicates 23g ± 2g.

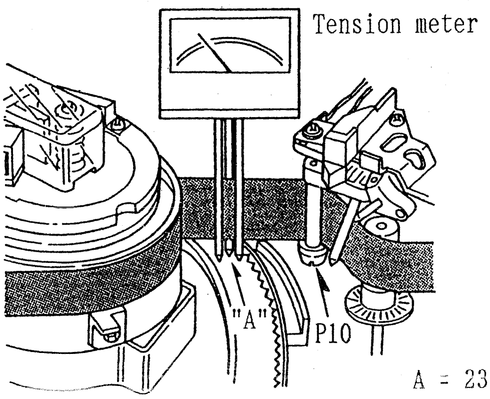
Tension meter
"A"
P10

A = 23g ± 2g

Step 3.

1. If it is not within specification, loosen the screw (A).
2. Insert the eccentric screw driver into Hole (B).
3. Adjust the position of T. Stopper Pin Base Unit so that the tension is 23g ± 2g.
4. Finally, tighten the screw (A).
5. Reconfirm the tension after the screw (A) is tightened.

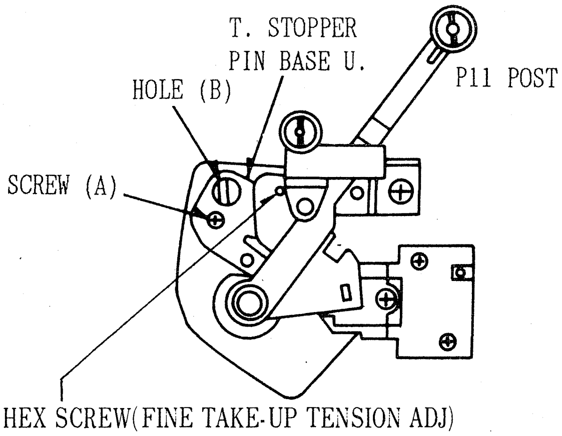
T. STOPPER PIN BASE U.
HOLE (B)
P11 POST
SCREW (A)
HEX SCREW(FINE TAKE-UP TENSION ADJ)

4-7. SUPPLY (REV.) TENSION ADJUSTMENT

(W5 SERVO)

TEST POINT	MODE	TAPE USED	M.EQ.	INPUT·SIGNAL	ADJUSTMENT
"A" (P1 ~ P2)	SHTL × -1	BLANK 90 min. TAPE BEGINNING PORTION	TENSION METER	----------	VR309 (S. REV. TENSION)

Step 1. MACHINE CONDITION	1. Refer to Set Up Conditions at the beginning of this SECTION (SERVO - W5 Machine Condition 4-1).

Step 2.

1. Insert the tension meter to Portion "A" that is between P1 post and P2 post.
2. Mode : SHTL × -1 (See Above)
3. Confirm that the tension meter indicates 25 ± 1 (g).
4. If it is not within specification, adjust VR309 so that the tension is 25 ± 1 (g).

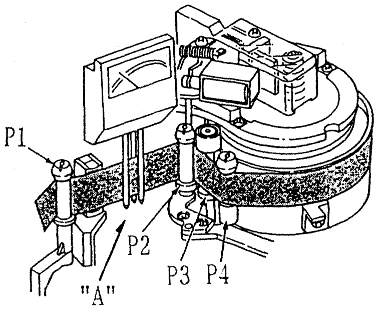

⊘ VR309

A = 25 ± 1 (g)

4-8. TAKE-UP (REV.) TENSION ADJUSTMENT

(W5 SERVO)

TEST POINT	MODE	TAPE USED	M.EQ.	INPUT SIGNAL	ADJUSTMENT
"A" (P9 ~ P10)	SHTL × -1	BLANK 90 min. TAPE BEGINNING PORTION	TENSION METER	----------	VR305 (T. REV. TENSION)

Step 1. MACHINE CONDITION	1. Refer to Set Up Conditions at the beginning of this SECTION (SERVO - W5 Machine Condition 4-1).

Step 2.

1. Insert the tension meter to Portion "A" that is between P9 post and P10 post.
2. Mode : SHTL × -1 (See Above)
3. Confirm that the tension meter indicates 30 ~ 35 (g).
4. If it is not within specification, adjust VR309 so that the tension is 30 ~ 35 (g).

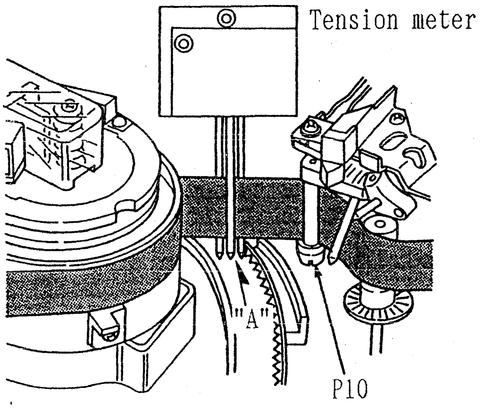

⊘ VR305

A = 30 ~ 35 (g)

4-9. STARTING TORQUE ADJUSTMENT

(W5 SERVO)

TEST POINT	MODE	TAPE USED	M.EQ.	INPUT SIGNAL	ADJUSTMENT
TP302 (HOT) TP310 (COLD)	PLAY	BLANK 90 min. TAPE BEGINNING PORTION	Digital Volt Meter	----------	VR301 (START TRQ)
Step 1. MACHINE CONDITION			Refer to Set Up Conditions at the beginning of this SECTION (SERVO - W5 Machine Condition 4-1).		
Note: Measure the voltage after the voltage is stabilized. 1. Adjust VR301 so that the voltage at TP302 is -200mV ± 5mV.			⊘ VR301 (TP302) - (TP310) = -200mV ± 5mV (HOT) (COLD)		

4-10. SUB-LOADING TENSION ADJUSTMENT

(W5 SERVO)

TEST POINT	MODE	TAPE USED	M.EQ.	INPUT SIGNAL	ADJUSTMENT
"A" (P9 ~ P10)	PLAY	BLANK 90 min. TAPE BEGINNING PORTION	TENSION METER	----------	VR307 (LOAD TENSION)
Step 1. MACHINE CONDITION			1. Refer to Set Up Conditions at the beginning of this SECTION (SERVO - W5 Machine Condition 4-1). 2. Connect a jumper wire between TP309 and TP311 to make a sub-loading condition after the tape is Loaded.		
Step 2. 1. Insert the tension meter to Portion "A" that is between P9 post and P10 post. 2. Mode : PLAY 3. Confirm that the tension meter indicates 8 ~ 10 (g). 4. If it is not within the specification, adjust VR307 so that the tension is 8 ~ 10 (g). 5. Finally, disconnect the jumper wire between TP309 and TP311.			Tension meter 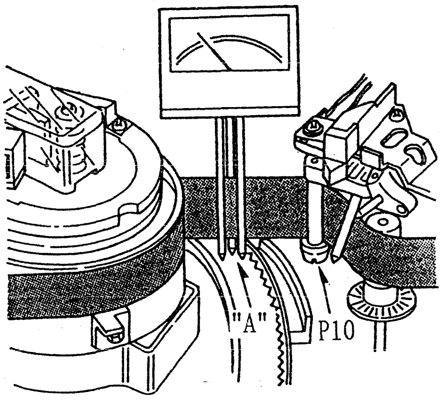 ⊘ VR307 A = 8 ~ 10 (G)		

4-11. LOADING & UNLOADING CONFIRMATION

(W5 SERVO)

TEST POINT	MODE	TAPE USED	M.EQ.	INPUT SIGNAL	ADJUSTMENT
-------	STOP ↓ ↑ EJECT	BLANK 90 min. TAPE	--------	----------	------------

Step 1.

1. Confirm that the tape is going into a load and Unloading mode properly when the unit is placed in STOP and EJECT several times.
2. Power Switch : OFF (EJECT mode)
3. Power Switch : ON
4. Confirm STEP 1 again.

Step 2.

1. If it is not, readjust the following items.
   A. Section 4-3 (Sub - Loading Voltage Adjustment)
   B. Section 4-10 (Sub - Loading Tension Adjustment)
2. Repeat STEP 2.

4-12. FF TENSION ADJUSTMENT

(W5 SERVO)

TEST POINT	MODE	TAPE USED	M.EQ.	INPUT SIGNAL	ADJUSTMENT
"A" (P1 ~ P2)	FF	BLANK 90 min. TAPE BEGINNING PORTION	TENSION METER	----------	VR304 (S. FF TENSION)

Step 1.

1. Insert the tension meter to Portion "A" that is between P1 post and P2 post.
2. Mode : FF
3. Confirm that the tension meter indicates 15 ~ 20 (g).
4. If it is not within the specification, adjust VR304 so that the tension is 15 ~ 20 (g).

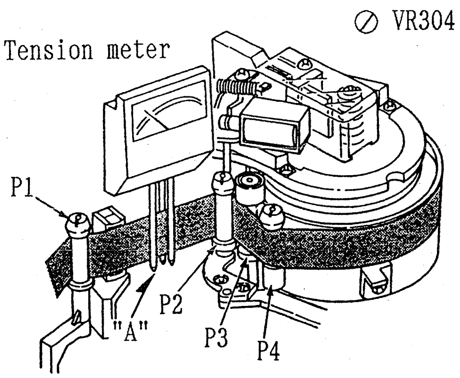

A = 15 ~ 20 (g)

4-13. REW TENSION ADJUSTMENT

(W5 SERVO)

TEST POINT	MODE	TAPE USED	M.EQ.	INPUT SIGNAL	ADJUSTMENT
"A" (P1 ~ P2)	REW	BLANK 90 min. TAPE END OF TAPE PORTION	TENSION METER	----------	VR306 (S. REW TENSION)

Step 1.

1. Insert the tension meter to Portion "A" that is between P1 post and P2 post.
2. Mode : REW
3. Confirm that the tension meter indicates 40 ~ 50 (g).
4. If it is not within specification, adjust VR306 so that the tension is 40 ~ 50 (g).

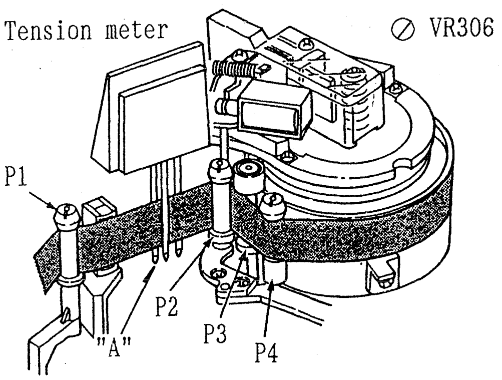

A = 40 ~ 50 (g)

4-14. MACHINE CONDITION SETTING (2)

(W5 AT)

Set the switches on the Front Sub Panel as follows except special condition.

1. MODE SELECT : EE (FOR AU-65H/65)
2. COLOUR FRAMING : 2F Mode
3. AT POWER ------------- Please disconnect the connector P10 on the AT power Board and set the AT Head to the preset position.
   (AT model only)

4-15. OSCILLATION FREQUENCY ADJUSTMENT

(W5 SERVO)

TEST POINT	MODE	TAPE USED	M.EQ.	INPUT SIGNAL	ADJUSTMENT
TP103	PLAY	PRE-RECORDED 90 min. TAPE (MIDDLE PORTION)	FREQUENCY COUNTER	----------	VC101

Step 1. MACHINE CONDITION	Refer to Set Up Conditions at 4-14 Machine Condition Setting (2).

⊘ VC101 SPECIFICATION : 2985940 ± 50 [Hz]

4-16. CAPSTAN PHASE POSITION ADJUSTMENT (FOR AU-65H / AU-65)

(W5 SERVO)

TEST POINT	MODE	TAPE USED	M.EQ.	INPUT SIGNAL	ADJUSTMENT
TP105 TP102	REC	BLANK TAPE (MIDDLE PORTION)	OSCILLOSCOPE	COLOUR BAR	VR103 (CAP REF.)

Step 1. MACHINE CONDITION	Refer to Set Up Conditions at 4-14 Machine Condition Setting (2).

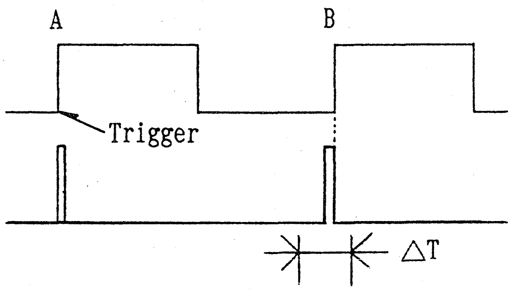

⊘ VR103 $\Delta T = 0 \pm 70$ [μsec]

Trigger = "A" point of TP105

4-17. CAPSTAN PHASE POSITION ADJUSTMENT (FOR AU-62H / AU-62)

(W5 SERVO)

TEST POINT	MODE	TAPE USED	M.EQ.	INPUT SIGNAL	ADJUSTMENT
TP105 TP102	PLAY	PRE-RECORDED 90 min. TAPE (MIDDLE PORTION)	OSCILLOSCOPE	----------	VR103 (CAP REF.)
Step 1. MACHINE CONDITION			Refer to Set Up Conditions at 4-14 Machine Condition Setting (2)		

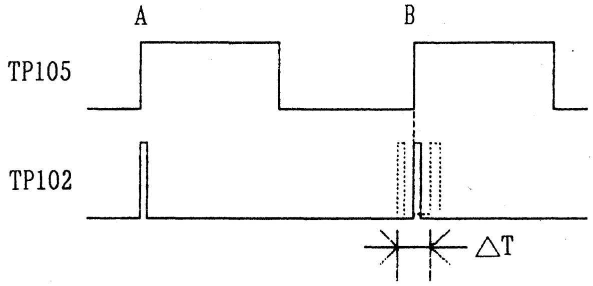

⊘ VR103 $\Delta T = 0 \pm 70$ [μsec]

Trigger = "A" point of TP105

4-18. CAPSTAN PHASE POSITION ADJUSTMENT (FOR AU-63H / AU-63)

(W5 SERVO)

TEST POINT	MODE	TAPE USED	M.EQ.	INPUT SIGNAL	ADJUSTMENT
TP3 TP102	PLAY	PRE-RECORDED 90 min. TAPE (MIDDLE PORTION)	OSCILLOSCOPE	----------	VR103 (CAP REF.)
Step 1. MACHINE CONDITION			Refer to Set Up Conditions at 4-14 Machine Condition Setting (2).		

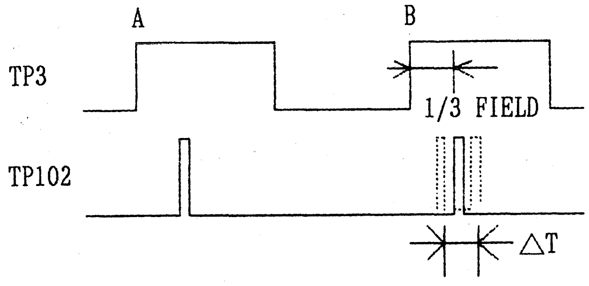

⊘ VR103 $\Delta T = 0 \pm 70$ [μsec]

Trigger = "A" point of TP3

4-19. TRACKING FIX ADJUSTMENT (FOR AU-65H / AU-65)

(W5 SERVO)

TEST POINT	MODE	TAPE USED	M.EQ.	INPUT SIGNAL	ADJUSTMENT
TP3 TP110	SELF REC/PB	BLANK TAPE	OSCILLOSCOPE	COMPONENT COLOUR BAR	VR3 (R/P TRACK)

Step 1.

MACHINE CONDITION

1. FRONT PANEL TRACKING VR : DETENT POSITION
2. Refer to Set Up Conditions at 4-14 Machine Condition Setting (2).

Step 2.

SCOPE CH1 : TP3 (Trigger)
CH2 : TP110

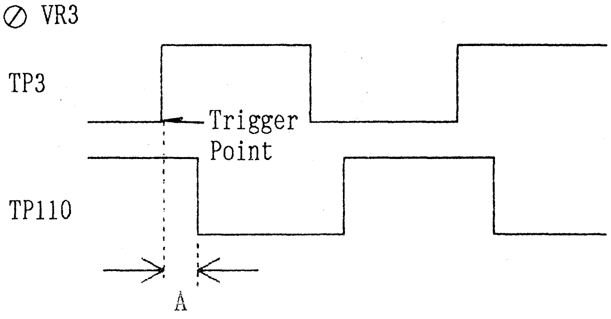

A = 0 ± 100 [μsec]

4-20. TRACKING FIX ADJUSTMENT (FOR AU-63H / AU-63)

(W5 SERVO)

TEST POINT	MODE	TAPE USED	M.EQ.	INPUT SIGNAL	ADJUSTMENT
TP3 TP110	PLAY	ALIGNMENT TAPE (COLOUR BAR)	OSCILLOSCOPE	----------	VR3 (R/P TRACK) R/P TRACK is VR's name This is used for AT

Step 1.

MACHINE CONDITION

Refer to Set Up Conditions at 4-14 Machine Condition Setting (2).

Step 2.

SCOPE CH1 : TP3 (Trigger)
CH2 : TP110

1. Set the sweep range of scope so that the "A" width measure across 9 Scales on the oscilloscope face.

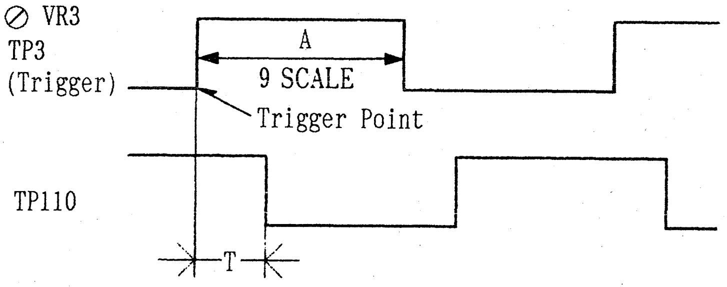

T = 3 ± 0.1 SCALES (A : T = 9 : 3)

4-21. TRACKING FIX ADJUSTMENT
(FOR AU-62H / AU-62)

(W5 SERVO)

TEST POINT	MODE	TAPE USED	M.EQ.	INPUT SIGNAL	ADJUSTMENT
TP3 TP110	PLAY	ALIGNMENT TAPE	OSCILLOSCOPE	----------	VR3 (R/P TRACK)

Step 1. MACHINE CONDITION	FRONT PANEL TRACKING VR : DETENT POSITION
Step 2. SCOPE CH1 : TP3 (Trigger) CH2 : TP110	⊘ VR3 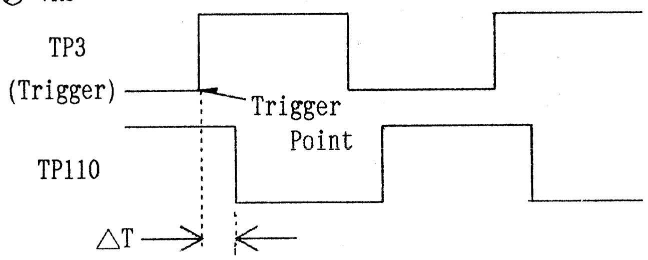 TP3 (Trigger) Trigger Point TP110 △T △T = 0 ± 100 [μsec]

4-22. ×1/32 SPEED ADJUSTMENT (1)

(W5 SERVO)

TEST POINT	MODE	TAPE USED	M.EQ.	INPUT SIGNAL	ADJUSTMENT
TP113 TP115	SHTL ×1/32	PRE-RECORDED 90 min. TAPE (MIDDLE PORTION)	OSCILLOSCOPE	----------	VR102 (1/32 A) VR101 (1/32 C)

Step 1. MACHINE CONDITION	Refer to Set Up Conditions at 4-14 Machine Condition Setting (2).
Step 2. 1. SCOPE : TP113 2. Confirm that the waveform is as follows. T1 : T2 = 4:6 or 6:4	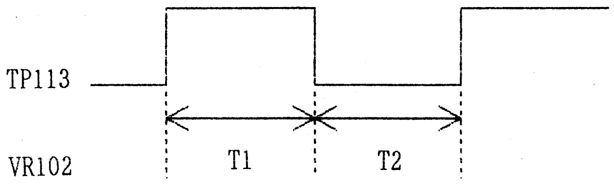 ⊘ VR102 ⊘ VR101 T1 : T2 = 4 : 6 ~ 6 : 4
Step 3. 1. If it is not within specification, adjust VR102 so that T1 : T2 = 5 : 5	

4-23. ×1/32 SPEED ADJUSTMENT (2)

(W5 SERVO)

TEST POINT	MODE	TAPE USED	M.EQ.	INPUT SIGNAL	ADJUSTMENT
TP115	SHTL ×1/32	PRE-RECORDED 90 min. TAPE (MIDDLE PORTION)	FREQUENCY COUNTER	----------	VR101 (1/32 C)

Step 1. FREQUENCY COUNTER CONDITION	SW : LOW and L. P. F.
Step 2. SPECIFICATION	⊘ VR101 56.25 ± 5 [Hz]

4-24. PG SHIFTER ADJUSTMENT (FOR AU-65H/62H and AU-65/62)

(W5 SERVO)

TEST POINT	MODE	TAPE USED	M.EQ.	INPUT SIGNAL	ADJUSTMENT
TP13 TP7	PLAY	ALIGNMENT COLOUR BAR	OSCILLOSCOPE	----------	SW 1 (FINE) SW 2 (COARSE)

Step 1.

Note:
Confirm that the Y RF envelope is maximized at TP301 on W3 Board. (The mechanical interchangeability should be completed.)

1. Adjust SW1 and SW2 so that the T = 2.75 ± 0.1 [H] as shown in figure.

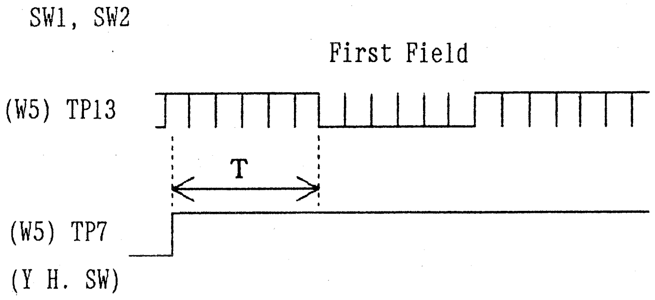

T = 2.75 ± 0.1 [H]

4-25. PG SHIFTER ADJUSTMENT (FOR AU-63H / AU-63)

(W5 SERVO)

TEST POINT	MODE	TAPE USED	M.EQ.	INPUT SIGNAL	ADJUSTMENT
TP13 TP702	PLAY	ALIGNMENT COLOUR BAR	OSCILLOSCOPE	----------	SW 1 (FINE) SW 2 (COARSE)

Step 1. - MACHINE CONDITION	Refer to Set Up Conditions at 4-14 Machine Condition Setting (2).

Step 2.

Note:
Confirm that the Y RF envelope is maximized at TP301 on W3 Board. (The mechanical interchangeability should be completed.)

1. Adjust SW1 and SW2 so that the T = 2.75 ± 0.1 [H] as shown in figure.

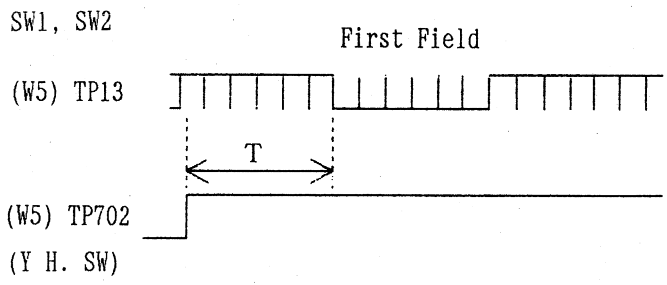

T = 2.75 ± 0.1 [H]

4-26. REC SHIFTER ADJUSTMENT
(FOR AU-65H / AU-65)

(W5 SERVO)

TEST POINT	MODE	TAPE USED	M.EQ.	INPUT SIGNAL	ADJUSTMENT
TP13 TP7	REC	BLANK TAPE	OSCILLOSCOPE	COMPONENT 100% COLOUR BAR	VR1 (REC SHIFT)

Step 1. MACHINE CONDITION	1. Refer to Set Up Conditions at 4-14 Machine Condition Setting (2). 2. INPUT SELECT : COMPONENT (Pull Out Drawer & Front Sub Panel)
Step 2. SCOPE CH1 : TP13 SCOPE CH2 : TP7 1. Adjust VR1 so that the T = 2.75 ± 0.1 [H] as shown in figure.	⊘ VR1 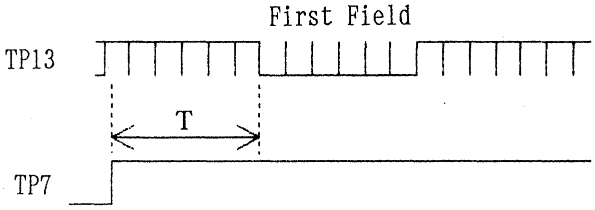 T = 2.75 ± 0.1 [H]

4-27. DRUM PHASE FLUCTUATION CONFIRMATION
(FOR AU-65H / AU-65)

(W5 SERVO)

TEST POINT	MODE	TAPE USED	M.EQ.	INPUT SIGNAL	ADJUSTMENT
TP3 TP7	REC	BLANK TAPE	OSCILLOSCOPE	COMPONENT 100% COLOUR BAR	------------

Step 1. MACHINE CONDITION	Refer to Set up Conditions at 4-14 Machine Condition Setting (2).
Step 2. SCOPE CH1 : TP3 (Trigger) SCOPE CH2 : TP7 1. Trigger the scope at rising edge of TP3. 2. Confirm that the T fluctuation is less than 6 μsec as shown in figure.	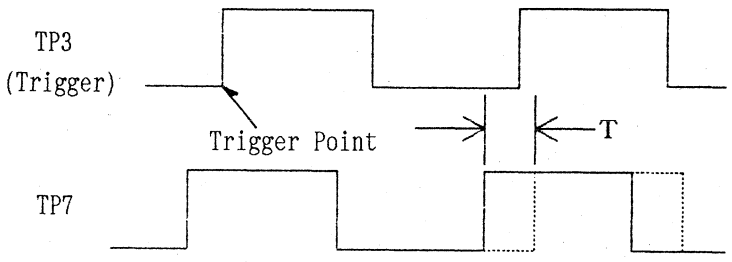 T = less than 6 μsec.
Step 3. 1. If it is not with in specification, readjust from beginning of this section (4-2 ~).	

4-28. DRUM PHASE FLUCTUATION CONFIRMATION
(FOR AU-62H/63H and AU-62/63)

(W5 SERVO)

TEST POINT	MODE	TAPE USED	M.EQ.	INPUT SIGNAL	ADJUSTMENT
TP3 TP7	PLAY	PRE-RECORDED TAPE 90 min. MIDDLE PORTION	OSCILLOSCOPE	---------	------------

Step 1. MACHINE CONDITION	Refer to Set Up Conditions at 4-14 Machine Condition Setting (2).
Step 2. SCOPE CH1 : TP3 (Trigger) SCOPE CH2 : TP7 1. Trigger the scope at rising edge of TP3. 2. Confirm that the T fluctuation is less than 6 μsec as shown in figure.	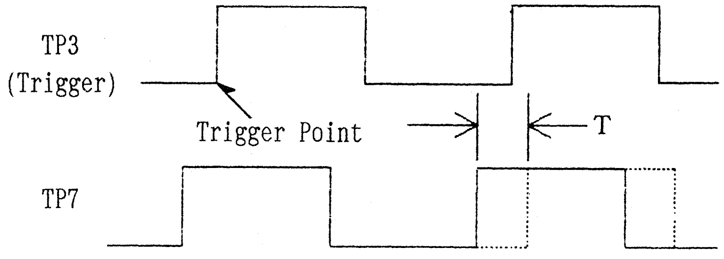 T = less than 6 μsec.
Step 3. 1. If it is not with in specification, readjust from beginning of this section (4-2 ~).	

4-29. CTL AMP CONFIRMATION
(FOR AU-65H / AU-65)

(W5 SERVO)

TEST POINT	MODE	TAPE USED	M.EQ.	INPUT SIGNAL	ADJUSTMENT
TP109 TP110	Time Code Insert Recording	BLANK TAPE	OSCILLOSCOPE	COMPONENT 100% COLOUR BAR	------------

Step 1. SCOPE CH1 : TP109 SCOPE CH2 : TP110 (Trigger) 1. Confirm that the V1 (Noise level) is less than 400mVp-p. 2. Confirm the phase relationship as shown. 3. Confirm that the DC voltage of TP109 (V2) is less than 2.5V (DC).	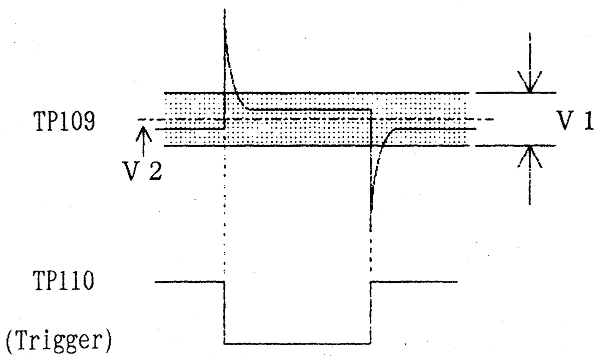

4-30. CTL AMP CONFIRMATION (FOR AU-62H/63H and AU-62/63)

(W5 SERVO)

TEST POINT	MODE	TAPE USED	M.EQ.	INPUT SIGNAL	ADJUSTMENT
TP109 TP110	PLAY	ALIGNMENT TAPE (COLOUR BAR)	OSCILLOSCOPE	COMPONENT 100% COLOUR BAR	------------

Step 1. MACHINE CONDITION	Refer to Set Up Conditions at 4-14 Machine Condition Setting (2).
Step 2. SCOPE CH1 : TP109 SCOPE CH2 : TP110 (Trigger) 1. Confirm the phase relationship as shown. 2. Confirm that the DC voltage of TP109 (V2) is less than 2.5V (DC).	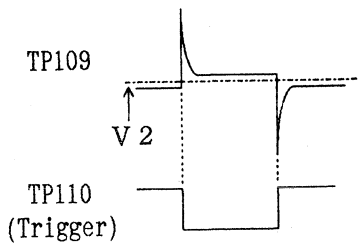

4-31. CTL-RECOVER CIRCUIT OPERATING CONFIRMATION

(W5 SERVO)

TEST POINT	MODE	TAPE USED	M.EQ.	INPUT SIGNAL	ADJUSTMENT
TP110 W5 Terminal R18B	SHTL ×1/2 -×1/2	ALIGNMENT TAPE	OSCILLOSCOPE	----------	------------

Step 1. MACHINE CONDITION	Refer to Set Up Conditions at 4-14 Machine Condition Setting (2).
Step 2. SCOPE CH1 : TP110 SCOPE CH2 : Terminal R18B (on W5 Board) 1. MODE : SHTL × 1/2 2. Confirm the phase relationship as shown.	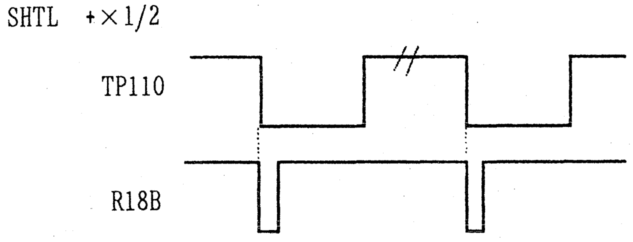
Step 3. 1. MODE : SHTL −× 1/2 2. Confirm the phase relationship as shown.	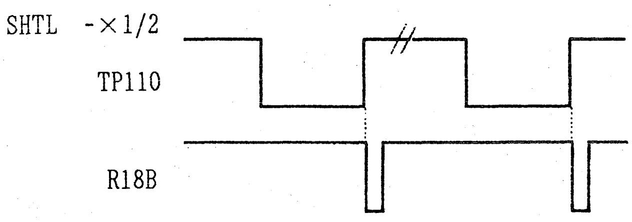

4-32. 50 PIN PARALLEL REMOTE CAPSTAN OVERRIDE SYNCRONIZATION ADJUSTMENT

(W5 SERVO)

TEST POINT	MODE	TAPE USED	M.EQ.	INPUT SIGNAL	ADJUSTMENT
TP115	PLAY	PRE-RECORDED TAPE	FREQUENCY COUNTER	----------	VR104 (CAP OVER) VR105

Note:
This adjustment is needed when AU-MK25 is installed.

Step 1.

1. Connect a DC voltage to pin 46 of 50 Pin Remote Connector.
2. Set the DC voltage to 5.2V (DC).
3. FREQUENCY COUNTER : TP115
4. Adjust VR104 so that the frequency becomes 1800 ± 50Hz.
5. Set the DC voltage to 8.2V (DC).
6. Frequency Counter : TP115
7. Adjust VR105 so that the frequency becomes 2160 ± 100Hz.
8. Set the DC voltage to 2.2V (DC).
9. Frequency Counter : TP115
10. Confirm that the frequency becomes 1535 ± 100Hz.
11. If it is not, repeat from item 2 to item 10.

46 Pin (on 50 Pin)	TP115 (Frequency)	VR No.
2.2V (DC)	1535 ± 100Hz	CONFIRMATION
5.2V (DC)	1800 ± 50Hz	VR104
8.2V (DC)	2160 ± 100Hz	VR105

4-33. SWITCHING POWER SOURCE ADJUSTMENT (WITH AT MODE)

(AT POWER)

TEST POINT	MODE	TAPE USED	M.EQ.	INPUT SIGNAL	ADJUSTMENT
TP 5 TP 6	PLAY	BLANK TAPE	VOLTMETER	----------	VR 1

SPEC :

TP 5 = +400V ± 10V ⊘ VR1

TP 6 = -400V ± 10V (CONFIRMATION)

4-34. OFFSET ADJUSTMENT (1) (WITH AT MODEL)

(AT POWER)

TEST POINT	MODE	TAPE USED	M.EQ.	INPUT SIGNAL	ADJUSTMENT
TP 1	PLAY	-------	VOLTMETER	----------	VR 2

1. Connect a jumper wire between TPG1 and TP9.	TP1 = 0 ± 0.3V (When TP9 and TPG1 are shorted.)
2. Adjust VR2 so that the voltage at TP1 is 0 ± 0.3V.	
3. Disconnect the connected jumper wire.	

4-35. OFFSET ADJUSTMENT (2) (WITH AT MODEL)

(AT POWER)

TEST POINT	MODE	TAPE USED	M.EQ.	INPUT SIGNAL	ADJUSTMENT
TP 2	PLAY	-------	VOLTMETER	----------	VR 3

1. Connect a jumper wire between TPG1 and TP10.	TP2 = 0 ± 0.3V (When TP10 and TPG1 are shorted.)
2. Adjust VR3 so that the voltage at TP2 is 0 ± 0.3V.	
3. Disconnect the connected jumper wire.	

4-36. MACHINE CONDITION SETTING (3)
(WITH AT MODEL)

(W5 AT)

1. This adjustment procedure is required for machines equipped with Auto Tracking Function.

2. Confirm that the connector (P10) is connected to AT Power Board to supply the Auto Tracking voltage.

3. Before this AUTO TRACKING ADJ., the AT POWER BOARD should be adjusted (Refer to Section 4-33 ~ 4-35).

4. Before this AUTO TRACKING ADJ., the following adjustment should be completed.

   (1) Y Playback FM Carrier Level Adjustment (7-1)
   (2) Y Playback RF Level Adjustment (12-18)
   (3) C Playback FM Carrier Level Adjustment (7-2)
   (4) C Playback RF Level Adjustment (12-19)

4-37. CAPSTAN FG ADJUSTMENT
(WITH AT MODEL)

(W5 AT)

TEST POINT	MODE	TAPE USED	M.EQ.	INPUT SIGNAL	ADJUSTMENT
TP713 TP714	PLAY	ALIGNMENT TAPE (COLOUR BAR)	OSCILLOSCOPE	----------	VR708 (CAP FG1 OFFSET) VR709 (CAP FG2 OFFSET)

Step 1.

SCOPE CH1 : TP713
SCOPE CH2 : TP714

1. Confirm that the "A" level is more than 0.8Vp-p.

2. Adjust VR708 (for TP713) and VR709 (for TP714) so that the DC level "(B)" is 2.5 ± 0.2V (DC).

⊘ VR708
⊘ VR709

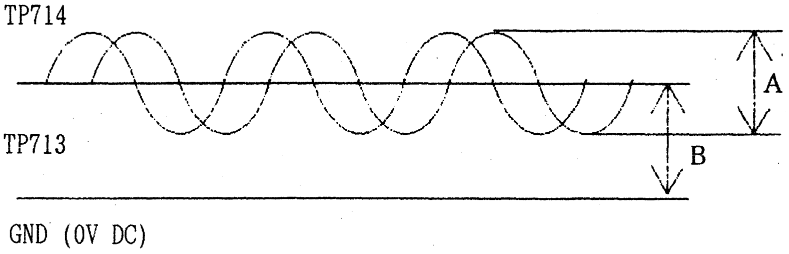

A = More than 0.8Vp-p
B = 2.5V ± 0.2V (DC)

LINEAR AUDIO SECTION (W6) FLOWCHART FOR AU-63H/AU-63, AU-62H/AU-62

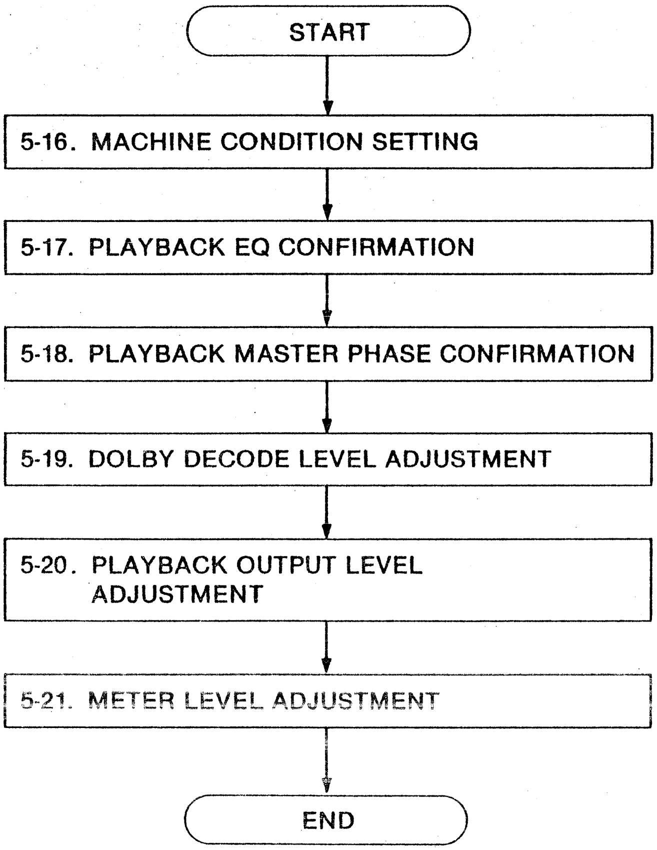
START
5-16. MACHINE CONDITION SETTING
5-17. PLAYBACK EQ CONFIRMATION
5-18. PLAYBACK MASTER PHASE CONFIRMATION
5-19. DOLBY DECODE LEVEL ADJUSTMENT
5-20. PLAYBACK OUTPUT LEVEL ADJUSTMENT
5-21. METER LEVEL ADJUSTMENT
END

5. AUDIO (W6) BOARD (1/2)
— LINEAR AUDIO SECTION —

5-1. MACHINE CONDITION SETTING (FOR AU-65H / AU-65 LINEAR AUDIO)

Set the switches on the Front Panel as follows except special condition.

REC & PB VR -- PRESET (PUSHED IN)
METER SELECT -- LINEAR
MODE -- EE
DOLBY -- OFF
LIMITER -- OFF
INPUT LEVEL SELECT (on the Audio I/O Board) --------------- +0dBu
OUTPUT LEVEL SELECT (on the Audio I/O Board) --------------- +0dBu

5-2. DOLBY ENCODER LEVEL ADJUSTMENT (FOR AU-65H / AU-65)

(AUDIO VR BOARD)

TEST POINT	MODE	TAPE USED	M.EQ.	INPUT SIGNAL	ADJUSTMENT
TP101 (CH1) on W6 TP301 (CH2) on W6	EJECT	-------	VTVM	1KHz Sinewave Signal +0dBu	VR1 (CH1 DOLBY ENC) on AUDIO VR VR5 (CH2 DOLBY ENC) on AUDIO VR

Step 1. MACHINE CONDITION	Refer to Set Up Conditions at the beginning of this SECTION (AUDIO - W6 Machine Condition 5-1).
Step 2. VTVM : TP101 (CH1) TP301 (CH2)	⊘ VR1, 5 (on AUDIO VR P.C.Board) SPECIFICATION : -6dBu ± 0.2dB (387.5mVrms)

5-3. E-E OUTPUT LEVEL ADJUSTMENT (FOR AU-65H / AU-65)

(W6 AUDIO)

TEST POINT	MODE	TAPE USED	M.EQ.	INPUT SIGNAL	ADJUSTMENT
CH1 LINE OUT CH2 LINE OUT	EJECT	-------	VTVM	1KHz Sinewave Signal 0dBu.	VR101 (CH1 E-E OUT) VR301 (CH2 E-E OUT)

Step 1. MACHINE CONDITION	Refer to Set Up Conditions at the beginning of this SECTION (AUDIO - W6 Machine Condition 5-1).
Step 2. VTVM : CH1 LINE OUT CH2 LINE OUT	⊘ VR101, 301 SPECIFICATION : 0dBu ± 0.2dB

5-4. METER LEVEL ADJUSTMENT (FOR AU-65H / AU-65)

(FRONT I/F BOARD)

TEST POINT	MODE	TAPE USED	M.EQ.	INPUT SIGNAL	ADJUSTMENT
CH1 METER CH2 METER	EJECT	-------	-------	1KHz Sinewave Signal 0dBu.	VR101 (CH1 METER) on Front Interface VR102 (CH2 METER) on Front Interface

Step 1. MACHINE CONDITION	Refer to Set Up Conditions at the beginning of this SECTION (AUDIO - W6 Machine Condition 5-1).
Step 2. 1. Adjust VR101 (CH1) and VR102 (CH2) on the Front Interface Board so that the meter indicates "-4" VU as shown.	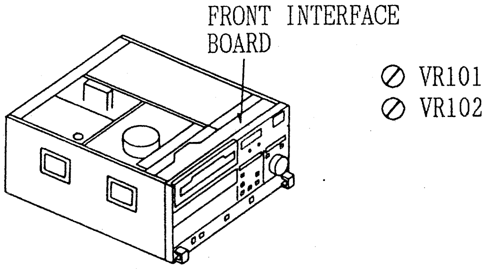 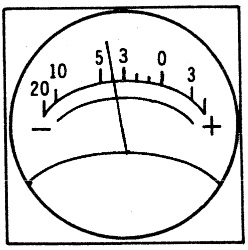

5-5. PLAYBACK EQ ADJUSTMENT (FOR AU-65H / AU-65)

(W6 AUDIO)

TEST POINT	MODE	TAPE USED	M.EQ.	INPUT SIGNAL	ADJUSTMENT
CH1 LINE OUT CH2 LINE OUT	PLAY	ALIGNMENT TAPE F. RESPONSE ADJ. PORTION	VTVM	----------	SW101 (CH1 PB EQ) SW301 (CH2 PB EQ)

Step 1. MACHINE CONDITION	Refer to Set Up Conditions at the beginning of this SECTION (AUDIO - W6 Machine Condition 5-1).
Step 2. 1. Play back the Frequency Response portion of the Alignment Tape. 2. Confirm that the specification as shown. 3. If it is not within specification, adjust SW101 (CH1) and SW301 (CH2). 4. Repeat Item 1, 2, 3 until the specification is met.	⊘ SW101, 301 SPECIFICATION : 1KHz ~ 7.5KHz = ± 1dB 7.5KHz ~ 15KHz = +1.5dB −2.5dB (1KHz Reference)

5-6. PLAYBACK MASTER PHASE CONFIRMATION (FOR AU-65H / AU-65)

(W6 AUDIO)

TEST POINT	MODE	TAPE USED	M.EQ.	INPUT SIGNAL	ADJUSTMENT
CH1 LINE OUT CH2 LINE OUT	PLAY	ALIGNMENT TAPE 15KHz PORTION	OSCILLOSCOPE	----------	A/C HEAD AZIMUTH ADJUSTMENT (MECHANICAL)

Step 1.

MACHINE CONDITION

1. Refer to Set Up Conditions at the beginning of this SECTION (AUDIO - W6 Machine Condition 5-1).
2. The PLAYBACK EQ ADJ. (5-5) should be completed.

Step 2.

SCOPE CH1 : CH1 LINE OUT
SCOPE CH2 : CH2 LINE OUT

1. Play back the 15KHz portion of the Alignment Tape.

2. Confirm that the phase difference is 0 ± 2.8μsec (±15°).

3. If it is not, readjust the A/C Head Azimuth Mechanically (See Mech. Adj. Section).
4. After this adjustment is finished, readjust the PB EQ ADJ. (5-5).

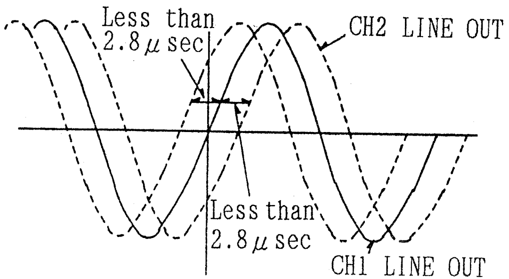

or Place scope in X-Y mode and observe the pattern.
Confirm both circles are in phase.

SCOPE

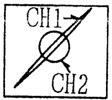

NO GOOD

SCOPE

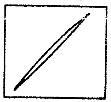

GOOD

5-7. DOLBY DECODE LEVEL ADJUSTMENT (FOR AU-65H / AU-65)

(W6 AUDIO)

TEST POINT	MODE	TAPE USED	M.EQ.	INPUT SIGNAL	ADJUSTMENT
TP101 (CH1) TP301 (CH2)	PLAY	ALIGNMENT TAPE 1KHz 0VU PORTION	VTVM	----------	VR103 (CH1 PB GAIN) VR303 (CH2 PB GAIN)

Step 1.

MACHINE CONDITION

Refer to Set Up Conditions at the beginning of this SECTION (AUDIO - W6 Machine Condition 5-1).

Step 2.

VTVM : TP101 (CH1)
TP301 (CH2)

⊘ VR103, VR303
SPECIFICATION : -6dBu ± 0.2dB
(387.5mVrms)

5-8. PLAYBACK OUTPUT LEVEL ADJUSTMENT
(FOR AU-65H / AU-65)

(AUDIO VR BOARD)

TEST POINT	MODE	TAPE USED	M.EQ.	INPUT SIGNAL	ADJUSTMENT
CH1 LINE OUT CH2 LINE OUT	PLAY	ALIGNMENT TAPE 1KHz 0VU PORTION	VTVM	----------	VR3 (CH1 PB OUT) on Audio VR VR7 (CH2 PB OUT) on Audio VR

Step 1. MACHINE CONDITION	Refer to Set Up Conditions at the beginning of this SECTION (AUDIO - W6 Machine Condition 5-1).
Step 2. VTVM : CH1 LINE OUT CH2 LINE OUT 1. Adjust VR3 and VR7 on the Audio VR Board so that the output level is +0dBu ± 0.2dBu.	⊘ VR3, 7 SPECIFICATION : +0dBu ± 0.2dB.

5-9. OSCILLATION RESONANCE POINT ADJUSTMENT
(FOR AU-65H / AU-65)

(W6 AUDIO)

TEST POINT	MODE	TAPE USED	M.EQ.	INPUT SIGNAL	ADJUSTMENT
HOT : TP551 TP552 TP553 TP554 TP555 TP556 TP557 TP558 GND : TPG551	REC	BLANK TAPE	OSCILLOSCOPE	----------	T551 (CH1 BIAS) T552 (CH2 BIAS) T553 (CH1 ERASE) T554 (CH2 ERASE) T555 (TC BIAS) T556 (TC ERASE) T557 (CTL ERASE) T558 (FULL ERASE)

Step 1. MACHINE CONDITION	Refer to Set Up Conditions at the beginning of this SECTION (AUDIO - W6 Machine Condition 5-1).
Step 2. SCOPE : The Connect & adjust for each Test Point. 1. Adjust each coil so that the "A" point of the waveform is in the centre between "B" and "C".	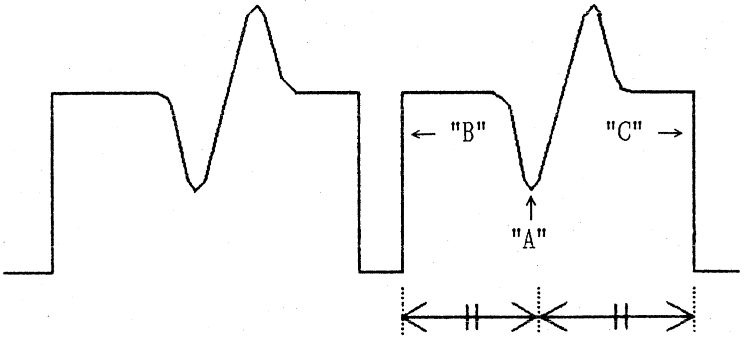

5-10. AUDIO BIAS CURRENT ADJUSTMENT (FOR AU-65H / AU-65)

(W6 AUDIO)

TEST POINT	MODE	TAPE USED	M.EQ.	INPUT SIGNAL	ADJUSTMENT
CH1 LINE OUT (TP102) CH2 LINE OUT (TP302)	SELF REC/PB	BLANK TAPE	VTVM	10KHz Sinewave Signal +0dBu	VR551 (CH1 BIAS CURR.) VR552 (CH2 BIAS CURR.)

Step 1.
MACHINE CONDITION

Refer to Set Up Conditions at the beginning of this SECTION (AUDIO - W6 Machine Condition 5-1).

Step 2.

1. Place the unit in the recording mode.
2. Turn VR551 (CH1) from fully clockwise position to fully counterclockwise position slowly while in the recording.
3. VTVM : CH1 LINE OUT (or TP102)
4. Play back the just recorded portion.
5. Find the audio peak level and notate that level.
6. Set VR551 around its centre position.
7. Make a recording, then playback that portion.
8. Confirm that the audio output level is -2.5dB ± 0.5dB (Bias Saturation point) from the Audio Peak Level.
9. If it is not, repeat from Steps 6 through 8 until the Audio Bias is -2.5dB ± 0.5dB from the Audio Peak Level.

Note :
CH2 AUDIO BIAS CURR. ADJ. procedure is the same as CH1.
(CH2 LINE OUT : TP302)

∅ VR551
∅ VR552

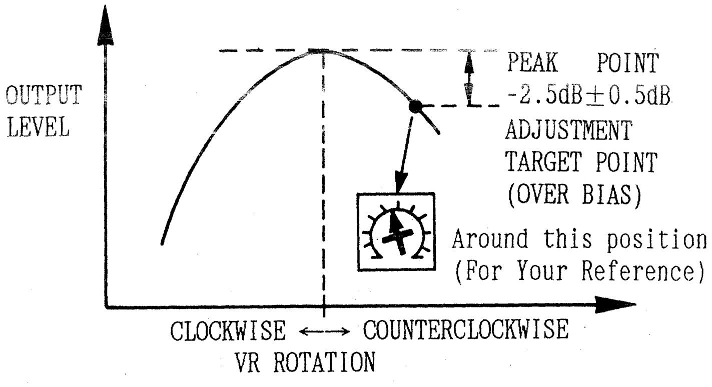

5-11. RECORDING EQUALIZER ADJUSTMENT (FOR AU-65H / AU-65)

(W AUDIO)

TEST POINT	MODE	TAPE USED	M.EQ.	INPUT SIGNAL	ADJUSTMENT
CH1 LINE OUT CH2 LINE OUT	SELF REC/PB	BLANK TAPE	VTVM	1KHz ~ 15KHz Sinewave Signal -10dBu	VR203 (CH1 REC EQ1) SW201 VR403 (CH2 REC EQ1) SW401

Step 1. MACHINE CONDITION	1. Refer to Set Up Conditions at the beginning of this SECTION (AUDIO - W6 Machine Condition 5-1). 2. The Audio Bias Current Adjustment (Section 5-10) should be completed.
Step 2. 1. Supply a 1KHz sinewave signal at -10dBu to CH1 and CH2 inputs. 2. Insert a work cassette and place the unit in the recording mode. 3. During recording mode, change the Audio Frequency from 1KHz to 7.5KHz, 12.5KHz and 15KHz. 4. Play back the just recorded portion and confirm that the output level is within the specification as shown. 5. If it is not, adjust VR203 and SW201. 6. Repeat from Item 3 to 4 until the output level is in specification. Note : VR203 (VR403) : CH1 REC EQ (CH2 REC EQ) SW201 (SW401) : CH1 REC EQ (CH2 REC EQ) 1. CH2 REC EQ ADJ. procedure is same as CH1.	⊘ VR203 ⊘ VR403 SW201 SW401 SPECIFICATION : 1KHz ~ 7.5KHz = ± 1dB 7.5KHz ~ 15KHz = +1.5/-2.5dB (1KHz Reference)

5-12. RECORDING CURRENT ADJUSTMENT (FOR AU-65H / AU-65)

(W6 AUDIO)

TEST POINT	MODE	TAPE USED	M.EQ.	INPUT SIGNAL	ADJUSTMENT
CH1 LINE OUT CH2 LINE OUT	SELF REC/PB	BLANK TAPE	VTVM	1KHz Sinewave Signal +0dBu	VR202 (CH1 REC CURR.) VR402 (CH2 REC CURR.)

Step 1. MACHINE CONDITION	Refer to Set Up Conditions at the beginning of this SECTION (AUDIO - W6 Machine Condition 5-1).
Step 2. 1. VTVM : CH1 LINE OUT CH2 LINE OUT 2. Make a recording. 3. Play back the just recorded portion, and confirm that the output level is +0dBu ± 0.2dB at CH1 and CH2 outputs.	4. If it is not, adjust VR202 (VR402). 5. Repeat the Item 2 and 3 until the output level is +0dBu ± 0.2dB.

5-13. CH1 → CH2 CROSS TALK CANCEL ADJUSTMENT (FOR AU-65H / AU-65)

(W6 AUDIO)

TEST POINT	MODE	TAPE USED	M.EQ.	INPUT SIGNAL	ADJUSTMENT
CH2 LINE OUT	CH1 INSERT	BLANK TAPE	VTVM	1KHz & 9KHz Sinewave Signal +0dBu	VR205 (CH1 HIGH CTC) VR206 (CH1 CTC LEVEL)

Step 1. MACHINE CONDITION	Refer to Set Up Conditions at the beginning of this SECTION (AUDIO - W6 Machine Condition 5-1).
Step 2. 1. VTVM : CH2 LINE OUT 2. Supply a 1KHz sinewave signal at +0dBu to CH1 and CH2 Input. 3. Place the unit in the CH1 INSERT mode. 4. Confirm that the CH2 Audio Output Level is Less than -25dBu. 5. If it is not, adjust VR205 so that the CH2 Audio Output Level is less than -25dBu at CH2 LINE OUT.	Step 3. 1. VTVM : CH2 LINE OUT 2. Supply a 9KHz sinewave signal at +0dBu to CH1 and CH2 Input. 3. Place the unit in the CH1 INSERT mode. 4. Confirm that the CH2 Audio Output Level is Less than -25dBu. 5. If it is not, adjust VR206 so that the CH2 Audio Output Level is less than -25dBu at CH2 LINE OUT.

5-14. CH2 → CH1 CROSS TALK CANCEL ADJUSTMENT (FOR AU-65H / AU-65)

(W6 AUDIO)

TEST POINT	MODE	TAPE USED	M.EQ.	INPUT SIGNAL	ADJUSTMENT
CH1 LINE OUT	CH2 INSERT	BLANK TAPE	VTVM	1KHz & 9KHz Sinewave Signal +0dBu	VR405 (CH2 HIGH CTC) VR406 (CH2 CTC LEVEL)

Step 1. MACHINE CONDITION	Refer to Set Up Conditions at the beginning of this SECTION (AUDIO - W6 Machine Condition 5-1).
Step 2. 1. VTVM : CH1 LINE OUT 2. Supply a 1KHz sinewave signal at +0dBu to CH1 and CH2 Input. 3. Place the unit in the CH2 INSERT mode. 4. Confirm that the CH1 Audio Output Level is Less than -25dBu. 5. If it is not, adjust VR405 so that the CH1 Audio Output Level is less than -25dBu at CH1 LINE OUT.	Step 3. 1. VTVM : CH1 LINE OUT 2. Supply a 9KHz sinewave signal at +0dBu to CH1 and CH2 Input. 3. Place the unit in the CH2 INSERT mode. 4. Confirm that the CH1 Audio Output Level is Less than -25dBu. 5. If it is not, adjust VR406 so that the CH1 Audio Output Level is less than -25dBu at CH1 LINE OUT.

5-15. RECORDING PHASE ADJUSTMENT (FOR AU-65H / AU-65)

TEST POINT	MODE	TAPE USED	M.EQ.	INPUT SIGNAL	ADJUSTMENT
CH1 LINE OUT CH2 LINE OUT	SELF REC/PB	BLANK TAPE	OSCILLOSCOPE	10KHz Sinewave Signal +0dBu	VR201 (REC P. S.)

Step 1.

MACHINE CONDITION

1. Refer to Set Up Conditions at the beginning of this SECTION (AUDIO - W6 Machine Condition 5-1).
2. The PLAYBACK MASTER PHASE ADJ. (5-6) should be completed before this adjustment is done.

Step 2.

1. SCOPE CH1 : CH1 LINE OUT
   SCOPE CH2 : CH2 LINE OUT
2. Make a recording.
3. Play back the just recorded portion.
4. Confirm that the phase difference is 0 ± 3.7μsec (±20°).
5. If it is not, adjust VR201 and repeat from Item 2 to Item 4 until the phase difference becomes 0 ± 3.7μsec (±20°).

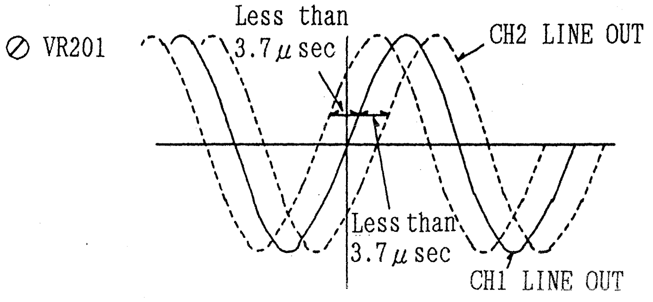
⊘ VR201
Less than 3.7μsec
CH2 LINE OUT
Less than 3.7μsec
CH1 LINE OUT

or Place scope in X-Y mode and observe the pattern.
Confirm both circles are in phase.

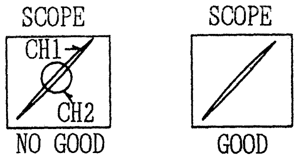
SCOPE
CH1
CH2
NO GOOD
SCOPE
GOOD

5-16. MACHINE CONDITION SETTING
(FOR AU-63H/62H and AU-63/62 LINEAR AUDIO)

Set the switches on the Front Panel as follows except special condition.

PB VR ---------------------------------- PRESET (PUSHED IN)
METER SELECT -- LINEAR
DOLBY -- OFF
OUTPUT LEVEL SELECT (on the Audio I/O Board) --------------- +0dBu

5-17. PLAYBACK EQ CONFIRMATION
(FOR AU-62H/63H and AU-62/63)

(W6 AUDIO)

TEST POINT	MODE	TAPE USED	M.EQ.	INPUT SIGNAL	ADJUSTMENT
CH1 LINE OUT CH2 LINE OUT	PLAY	ALIGNMENT TAPE F. RESPONSE ADJ. PORTION	VTVM	----------	------------

Step 1. MACHINE CONDITION	Refer to Set Up Conditions at 5-16 Machine Condition Setting (for AU-63H/62H and AU-63/62).
Step 2. 1. Play back the Frequency Response portion of the Alignment Tape. 2. Confirm that the specification is met.	SPECIFICATION : 1KHz ~ 7.5KHz = ± 1dB 7.5KHz ~ 15KHz = +1.5dB -2.5dB (1KHz Reference)

5-18. PLAYBACK MASTER PHASE CONFIRMATION
(FOR AU-62H/63H and AU-62/63)

(W6 AUDIO)

TEST POINT	MODE	TAPE USED	M.EQ.	INPUT SIGNAL	ADJUSTMENT
CH1 LINE OUT CH2 LINE OUT	PLAY	ALIGNMENT TAPE 15KHz PORTION	OSCILLOSCOPE	----------	A/C HEAD AZIMUTH ADJUSTMENT (MECHANICAL)

Step 1. MACHINE CONDITION	1. Refer to Set Up Conditions at 5-16 Machine Condition Setting (for AU-63H/62H and AU-63/62). 2. The PLAYBACK EQ CONFIRMATION (5-17) should be completed.

Step 2.

SCOPE CH1 : CH1 LINE OUT
SCOPE CH2 : CH2 LINE OUT

1. Play back the 15KHz portion of the Alignment Tape.
2. Confirm that the phase difference is 0 ± 2.8μsec (±15°).
3. If it is not, readjust the A/C Head Azimuth Mechanically (See Mech. Adj. Section).
4. After this adjustment is finished, reconfirm the PB EQ CONFIRMATION (5-17).

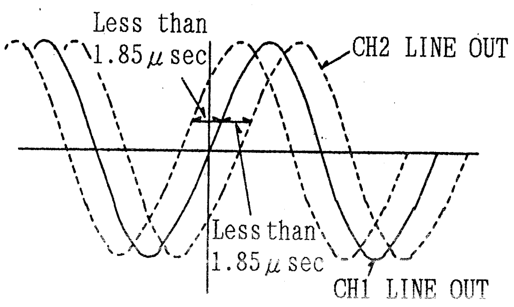

or Place scope in X-Y mode and observe the pattern. Confirm both circles are in phase.

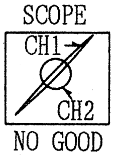

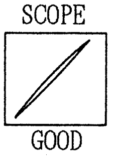

5-19. DOLBY DECODE LEVEL ADJUSTMENT
(FOR AU-62H/63H and AU-62/63)

(W6 AUDIO)

TEST POINT	MODE	TAPE USED	M.EQ.	INPUT SIGNAL	ADJUSTMENT
TP101 (CH1) TP301 (CH2)	PLAY	ALIGNMENT TAPE 1KHz 0VU PORTION	VTVM	----------	VR103 (CH1 PB GAIN) VR303 (CH2 PB GAIN)

Step 1. MACHINE CONDITION	Refer to Set Up Conditions at 5-16 Machine Condition Setting (for AU-63H/62H and AU-63/62).
Step 2. VTVM : TP101 (CH1) TP301 (CH2)	⊘ VR103, VR303 SPECIFICATION : -6dBu ± 0.2dB (387.5mVrms)

5-20. PLAYBACK OUTPUT LEVEL ADJUSTMENT (FOR AU-62H/63H and AU-62/63)

(W6 AUDIO)

TEST POINT	MODE	TAPE USED	M.EQ.	INPUT SIGNAL	ADJUSTMENT
CH1 LINE OUT CH2 LINE OUT	PLAY	ALIGNMENT TAPE 1KHz 0VU PORTION	VTVM	----------	VR3 (CH1 PB OUT) on Audio VR VR7 (CH2 PB OUT) on Audio VR

Step 1. MACHINE CONDITION	Refer to Set up Conditions at 5-16 Machine Condition Setting (for AU-63H/62H and AU-63/62).
Step 2. VTVM : CH1 LINE OUT CH2 LINE OUT 1. Adjust VR3 and VR7 on the Audio VR Board so that the output level is +0dBu ± 0.2dB.	⊘ VR3, 7 SPECIFICATION : +0dBu ± 0.2dB.

5-21. METER LEVEL ADJUSTMENT (FOR AU-62H/63H and AU-62/63)

(W6 AUDIO)

TEST POINT	MODE	TAPE USED	M.EQ.	INPUT SIGNAL	ADJUSTMENT
CH1 METER CH2 METER	EJECT	ALIGNMENT TAPE 1KHz 0VU PORTION	-------	----------	VR101 (CH1 METER) on Front Interface VR102 (CH2 METER) on Front Interface

Step 1. MACHINE CONDITION	Refer to Set Up Conditions at 5-16 Machine Condition Setting (for AU-63H/62H and AU-63/62).
Step 2. 1. Adjust VR101 (CH1) and VR102 (CH2) on the Front Interface Board so that the meter indicates "-4" VU as shown.	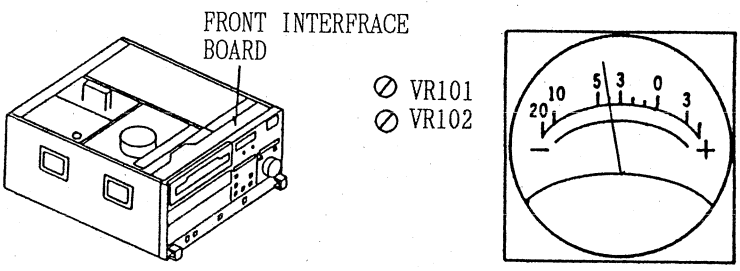 FRONT INTERFRACE BOARD ⊘ VR101 ⊘ VR102 20 10 5 3 0 3 − +

6. DECODER & CTCM (W4) BOARD (1/2) (FOR AU-65H/AU-65 ONLY)

DECODER & CTCM SECTION (1/2) (W4) FLOWCHART

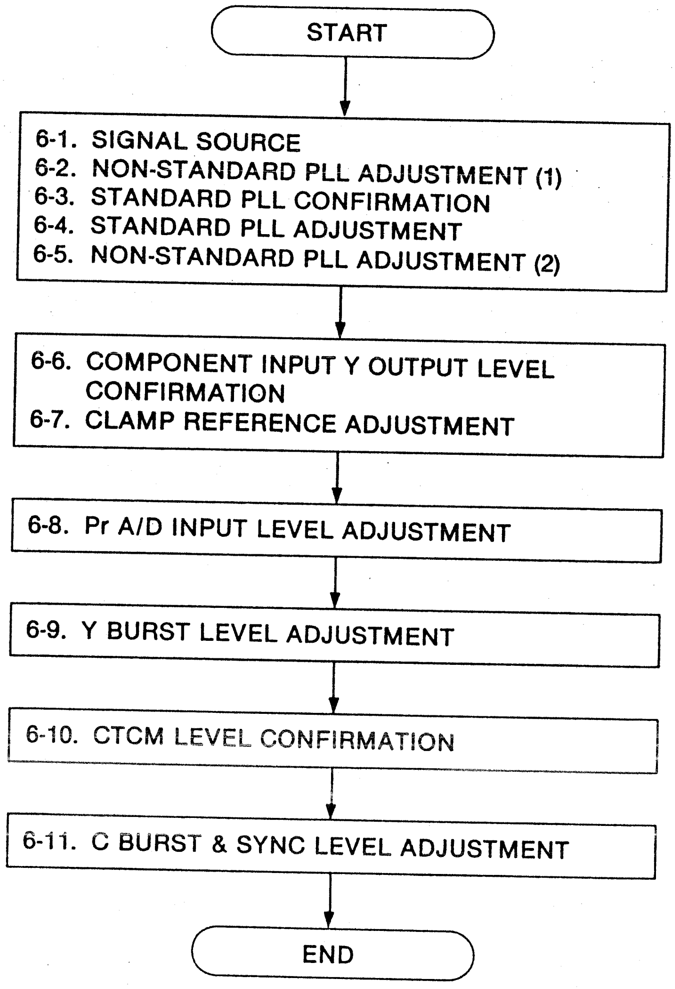
START
6-1. SIGNAL SOURCE
6-2. NON-STANDARD PLL ADJUSTMENT (1)
6-3. STANDARD PLL CONFIRMATION
6-4. STANDARD PLL ADJUSTMENT
6-5. NON-STANDARD PLL ADJUSTMENT (2)
6-6. COMPONENT INPUT Y OUTPUT LEVEL CONFIRMATION
6-7. CLAMP REFERENCE ADJUSTMENT
6-8. Pr A/D INPUT LEVEL ADJUSTMENT
6-9. Y BURST LEVEL ADJUSTMENT
6-10. CTCM LEVEL CONFIRMATION
6-11. C BURST & SYNC LEVEL ADJUSTMENT
END

6. DECODER & CTCM (W4) BOARD (1/2)
(FOR AU-65 ONLY)

6-1. SIGNAL SOURCE

(W4 DEC & CTCM)

Confirm the Signal Level of Signal Generator as follows.

1. COMPOSITE SIGNAL	100% (without SET UP) VIDEO LEVEL = 0.7Vp-p SYNC LEVEL = 0.3Vp-p
2. COMPONENT SIGNAL	100% (without SET UP) Y VIDEO LEVEL = 0.7Vp-p Y SYNC LEVEL = 0.3Vp-p PB LEVEL = 0.7Vp-p PR LEVEL = 0.7Vp-p
3. Y/C SIGNAL	100% (without SET UP) Y VIDEO LEVEL = 0.7Vp-p Y SYNC LEVEL = 0.3Vp-p CHROMA LEVEL = 0.885Vp-p
4. DUB (CTCM) SIGNAL	100% (without SET UP) Y VIDEO LEVEL = 0.7Vp-p Y SYNC LEVEL = 0.3Vp-p CTCM (PR) LEVEL = 0.7Vp-p

6-2. NON-STANDARD PLL ADJUSTMENT (1)
(FOR AU-65H / AU-65)

(W4 DEC & CTCM)

TEST POINT	MODE	TAPE USED	M.EQ.	INPUT SIGNAL	ADJUSTMENT
TP701	E-E (EJECT)	------	Digital Voltage Meter (OSCILLOSCOPE)	COMPONENT 100% COLOUR BAR	VL701 (NSTD OFFSET) VR702 (PLL POS 1)

Step 1. MACHINE CONDITION	STD/NSTD SELECT : NSTD (Set Up Menu)
Step 2. 1. D. V. M. (SCOPE) : TP701 2. Adjust VL701 so that the DC voltage is 0 ± 0.2V (DC) at TP701.	⊘ VL701 TP701 = 0 ± 0.2V (DC)
Step 3. 1. Set VR702 as shown in figure.	VR702 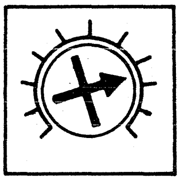

6-3. STANDARD PLL CONFIRMATION (FOR AU-65H / AU-65)

(W4 DEC & CTCM)

TEST POINT	MODE	TAPE USED	M.EQ.	INPUT SIGNAL	ADJUSTMENT
TP702	E-E (EJECT)	------	OSCILLOSCOPE	COMPONENT 100% COLOUR BAR	------------

Step 1. MACHINE CONDITION (STD mode)	1. Set-up Menu No. 1011 → 00 FRONT SWITCH 2. Input signal is standard signal from signal generator.
Step 2. 1. SCOPE : TP702 2. Confirm that the DC voltage is 0 ± 1V (DC) at TP702.	TP702 = 0 ± 1V (DC)

6-4. STANDARD PLL ADJUSTMENT (FOR AU-65H / AU-65)

(W4 DEC & CTCM)

TEST POINT	MODE	TAPE USED	M.EQ.	INPUT SIGNAL	ADJUSTMENT
TP504	E-E (EJECT)	------	OSCILLOSCOPE	COMPONENT 100% COLOUR BAR	VR703 (PLL POS 2)

Step 1. MACHINE CONDITION (STD mode)	1. Set-up Menu No. 1011 → 00 FRONT SWITCH 2. Input signal is standard signal from signal generator.
Step 2. 1. SCOPE : TP504 2. Trigger the scope at composite sync of signal generator. 3. Change the STD/NSTD by Set-up Menu alternately. 4. Confirm that the phase difference ("A") is less than 10 nsec.	TP504 ⊘ VR703 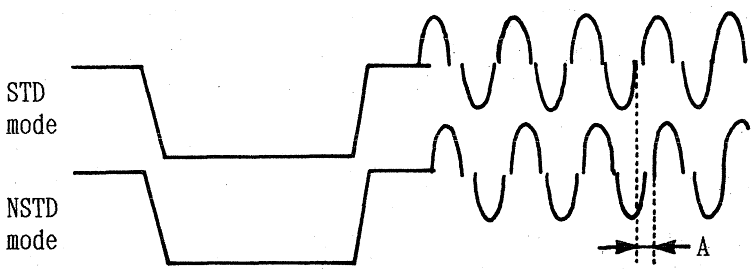 A = Less than 10 nsec.

6-5. NON-STANDARD PLL ADJUSTMENT (2)
(FOR AU-65H / AU-65)

(W4 DEC & CTCM)

TEST POINT	MODE	TAPE USED	M.EQ.	INPUT SIGNAL	ADJUSTMENT
TP703	E-E (EJECT)	------	OSCILLOSCOPE	COMPONENT 100% COLOUR BAR	VR702 (PLL POS 1)

Step 1.
MACHINE CONDITION
(STD mode)

1. Set-up Menu No. 1011 → 00 FRONT SWITCH
2. Input signal is standard signal from signal generator.

Step 2.

1. SCOPE : TP703
2. Trigger the scope at composite sync of signal generator.
3. Change the STD/NSTD by Set-up Menu alternately.
4. Confirm that the pulse position is same at STD mode and NSTD mode. (STD mode is reference)
5. If it is not, adjust VR702 so that the NSTD pulse position is same as STD pulse position. (Less than ± 10n sec.)

TP703
⊘ VR702

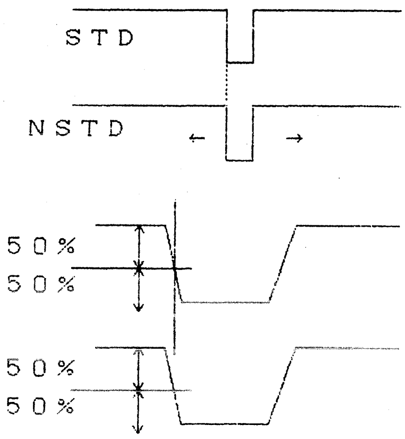

6-6. COMPONENT INPUT Y OUTPUT LEVEL CONFIRMATION
(FOR AU-65H / AU-65)

(W4 DEC & CTCM)

TEST POINT	MODE	TAPE USED	M.EQ.	INPUT SIGNAL	ADJUSTMENT
TP504	E-E (EJECT)	------	OSCILLOSCOPE	COMPONENT 100% COLOUR BAR	------------

Step 1.
MACHINE CONDITION

1. INPUT SELECT : COMPONENT
   (on Pull Out Drawer)
2. YC/COMPONENT SELECT : COMPONENT
   (on Front Sub Panel)

Step 2.

1. SCOPE : TP504
2. Confirm that the VIDEO Level (A) is 570 ± 30mVp-p.

TP504
⊘ VR207

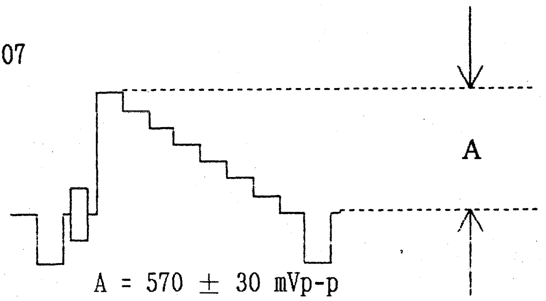

6-7. CLAMP REFERENCE ADJUSTMENT

(W4 DEC & CTCM)

TEST POINT	MODE	TAPE USED	M.EQ.	INPUT SIGNAL	ADJUSTMENT
TP601	E-E (EJECT)	-------	OSCILLOSCOPE or VECTORSCOPE	COMPOSITE 100% COLOUR BAR	VR601 (PB CLAMP REF) VR602 (PR CLAMP REF)

Step 1. (With by OSCILLOSCOPE)

1. Adjust VR601 and VR602 so that level differences of "A" and "B" portion are minimum as shown in below.

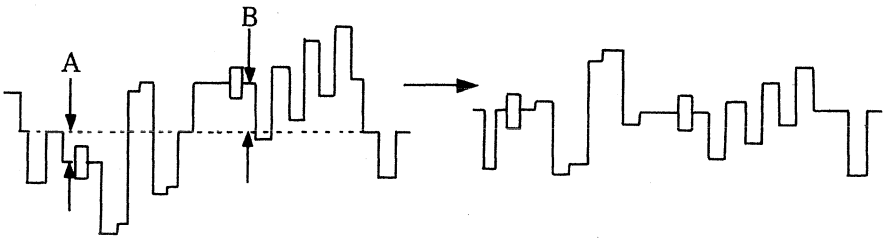

Note:
Expand the level of measurement portion on scope for precise adjustment.

Step 2. (With by VECTORSCOPE)

1. Adjust VR601 and VR602 so that the colour vectors comes to center as shown below.

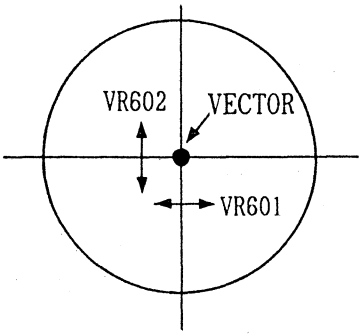

6-8. Pr A/D INPUT LEVEL ADJUSTMENT (FOR AU-65H / AU-65)

(W4 DEC & CTCM)

TEST POINT	MODE	TAPE USED	M.EQ.	INPUT SIGNAL	ADJUSTMENT
TP601	E-E (EJECT)	-------	OSCILLOSCOPE	COMPONENT OVERSIZE RAMP	VR501 (Pr LEV. 2) SW701 (Wobbling SW)

Step 1.

CONDITION

SCOPE SETTING

1. This adjustment needs 1 : 1 probe.
2. MODE : ADD

Step 2. (CORSE)

1. SCOPE CH1 : TP601
   SCOPE CH2 : NO SIGNAL
2. SW701 : ADJ side
3. Adjust VR501 so that the portion (A) level becomes just saturated as shown in figure.

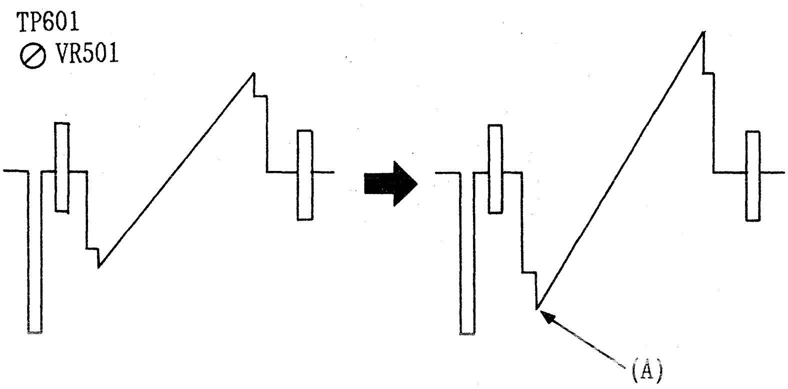

Step 3. (FINE)

1. SCOPE SETTING : 50mV/DIV.
2. Adjust VR501 so that the cyan portion (A) level is just at the saturation point (or drop of level in the 3 digital steps from the saturated point) as shown in figure.
3. SW701 : NORM side

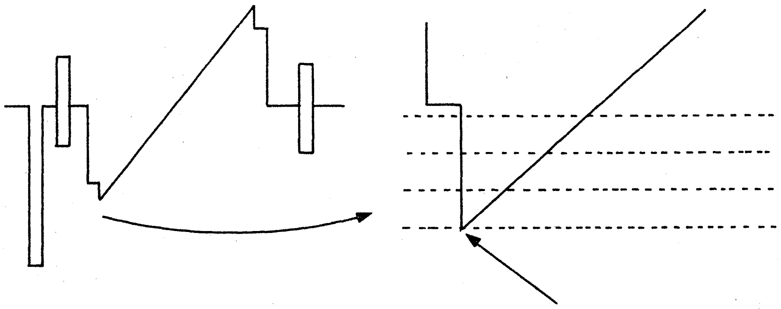

6-9. Y BURST LEVEL ADJUSTMENT (FOR AU-65H / AU-65)

(W4 DEC & CTCM)

TEST POINT	MODE	TAPE USED	M.EQ.	INPUT SIGNAL	ADJUSTMENT
TP504	E-E (EJECT)	-------	OSCILLOSCOPE	COMPONENT 100% COLOUR BAR	VR503 (Y BU LEV.)

Step 1.

1. SCOPE : TP504

2. Adjust VR503 so that A : B = 7 : 3 ± 0.3 as shown in figure.

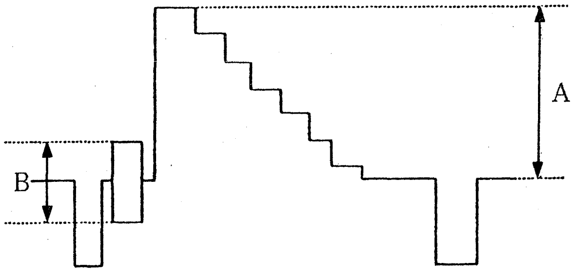

A : B = 7 : 3 ± 0.3

6-10. CTCM LEVEL CONFIRMATION (FOR AU-65H / AU-65)

(W4 DEC & CTCM)

TEST POINT	MODE	TAPE USED	M.EQ.	INPUT SIGNAL	ADJUSTMENT
TP601 (Y OUT)	E-E (EJECT)	-------	OSCILLOSCOPE	COMPONENT 100% COLOUR BAR	VR604 (CTCM LEV.)

Step 1.

1. SCOPE : TP601

2. Adjust VR604 so that the Pr peak to peak level (A) is 670 ± 8mVp-p.

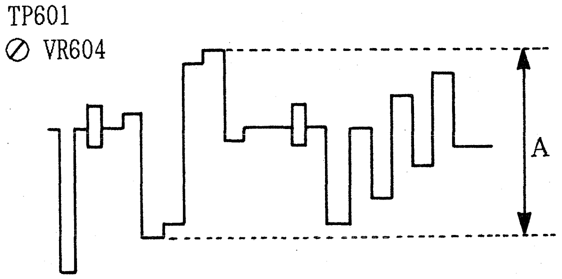

A = 670 ± 8mVp-p

6-11. C BURST & SYNC LEVEL ADJUSTMENT (FOR AU-65H / AU-65)

(W4 DEC & CTCM)

TEST POINT	MODE	TAPE USED	M.EQ.	INPUT SIGNAL	ADJUSTMENT
TP601	E-E (EJECT)	-------	OSCILLOSCOPE	COMPONENT 100% COLOUR BAR	VR504 (C BU LEV.) VR603 (C SY LEV.)

Step 1.

1. SCOPE : TP601
2. Adjust VR504 so that A : B (C) = 7 : 3 (± 0.09) as shown in figure set A to 7 divisions using uncal control.
3. Adjust VR603 so that A : D = 7 : 6.5 (± 0.2) as shown in figure.

Note:
When adjust VR504, expand the time/div of the scope.

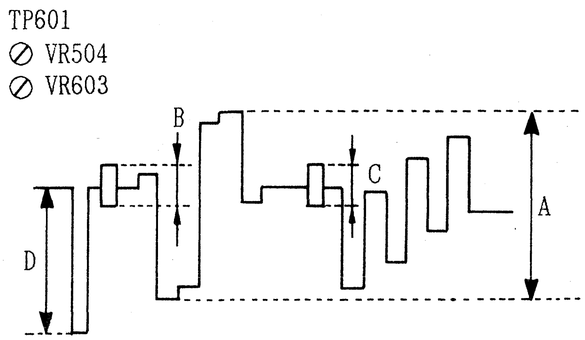

A : B (C) = 7 : 3 (± 0.09)
A : D = 7 : 6.5 (± 0.2)

7. MODULATION & DEMODULATION (W3) BOARD (1/2)

MODULATION & DEMODULATION SECTION (1/2) (W3)
FLOWCHART FOR AU-65H/AU-65

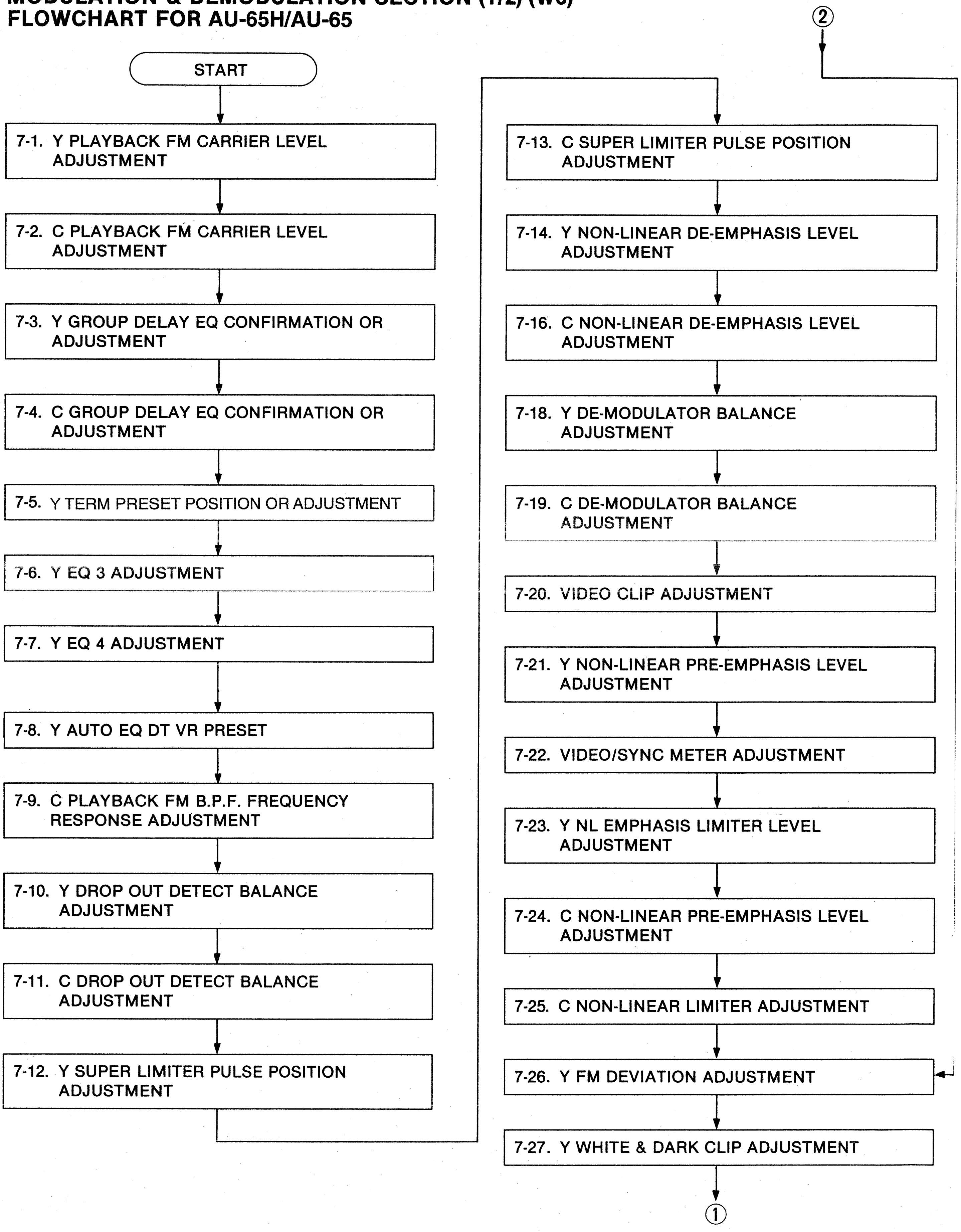

②
START
7-1. Y PLAYBACK FM CARRIER LEVEL ADJUSTMENT
7-2. C PLAYBACK FM CARRIER LEVEL ADJUSTMENT
7-3. Y GROUP DELAY EQ CONFIRMATION OR ADJUSTMENT
7-4. C GROUP DELAY EQ CONFIRMATION OR ADJUSTMENT
7-5. Y TERM PRESET POSITION OR ADJUSTMENT
7-6. Y EQ 3 ADJUSTMENT
7-7. Y EQ 4 ADJUSTMENT
7-8. Y AUTO EQ DT VR PRESET
7-9. C PLAYBACK FM B.P.F. FREQUENCY RESPONSE ADJUSTMENT
7-10. Y DROP OUT DETECT BALANCE ADJUSTMENT
7-11. C DROP OUT DETECT BALANCE ADJUSTMENT
7-12. Y SUPER LIMITER PULSE POSITION ADJUSTMENT
7-13. C SUPER LIMITER PULSE POSITION ADJUSTMENT
7-14. Y NON-LINEAR DE-EMPHASIS LEVEL ADJUSTMENT
7-16. C NON-LINEAR DE-EMPHASIS LEVEL ADJUSTMENT
7-18. Y DE-MODULATOR BALANCE ADJUSTMENT
7-19. C DE-MODULATOR BALANCE ADJUSTMENT
7-20. VIDEO CLIP ADJUSTMENT
7-21. Y NON-LINEAR PRE-EMPHASIS LEVEL ADJUSTMENT
7-22. VIDEO/SYNC METER ADJUSTMENT
7-23. Y NL EMPHASIS LIMITER LEVEL ADJUSTMENT
7-24. C NON-LINEAR PRE-EMPHASIS LEVEL ADJUSTMENT
7-25. C NON-LINEAR LIMITER ADJUSTMENT
7-26. Y FM DEVIATION ADJUSTMENT
7-27. Y WHITE & DARK CLIP ADJUSTMENT
①

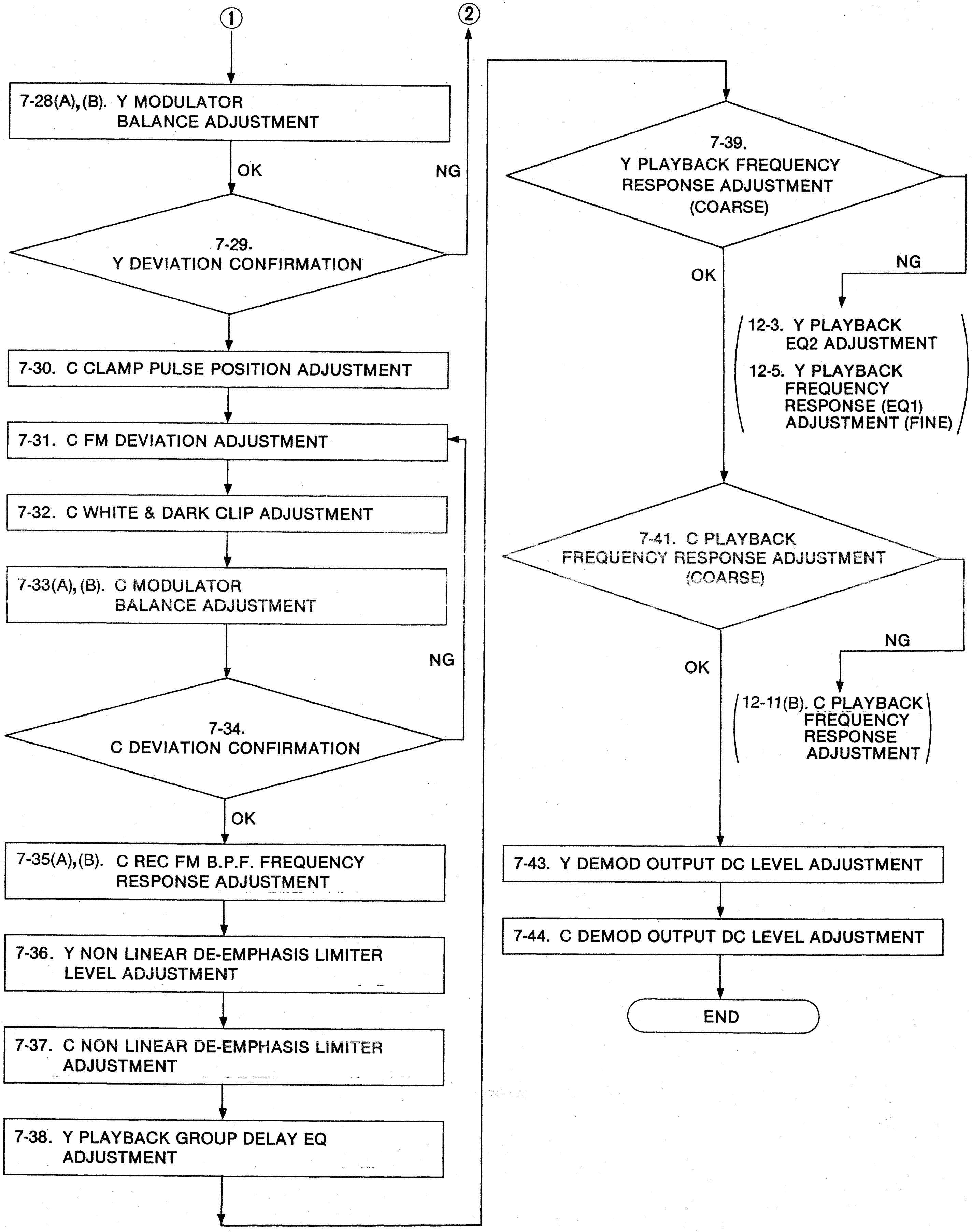
①
②
7-28(A),(B). Y MODULATOR BALANCE ADJUSTMENT
OK
NG
7-29. Y DEVIATION CONFIRMATION
7-30. C CLAMP PULSE POSITION ADJUSTMENT
7-31. C FM DEVIATION ADJUSTMENT
7-32. C WHITE & DARK CLIP ADJUSTMENT
7-33(A),(B). C MODULATOR BALANCE ADJUSTMENT
NG
7-34. C DEVIATION CONFIRMATION
OK
7-35(A),(B). C REC FM B.P.F. FREQUENCY RESPONSE ADJUSTMENT
7-36. Y NON LINEAR DE-EMPHASIS LIMITER LEVEL ADJUSTMENT
7-37. C NON LINEAR DE-EMPHASIS LIMITER ADJUSTMENT
7-38. Y PLAYBACK GROUP DELAY EQ ADJUSTMENT
7-39. Y PLAYBACK FREQUENCY RESPONSE ADJUSTMENT (COARSE)
OK
NG
12-3. Y PLAYBACK EQ2 ADJUSTMENT
12-5. Y PLAYBACK FREQUENCY RESPONSE (EQ1) ADJUSTMENT (FINE)
7-41. C PLAYBACK FREQUENCY RESPONSE ADJUSTMENT (COARSE)
OK
NG
12-11(B). C PLAYBACK FREQUENCY RESPONSE ADJUSTMENT
7-43. Y DEMOD OUTPUT DC LEVEL ADJUSTMENT
7-44. C DEMOD OUTPUT DC LEVEL ADJUSTMENT
END

MODULATION & DEMODULATION SECTION (1/2) FLOWCHART (W3) FOR AU-63H/AU-63

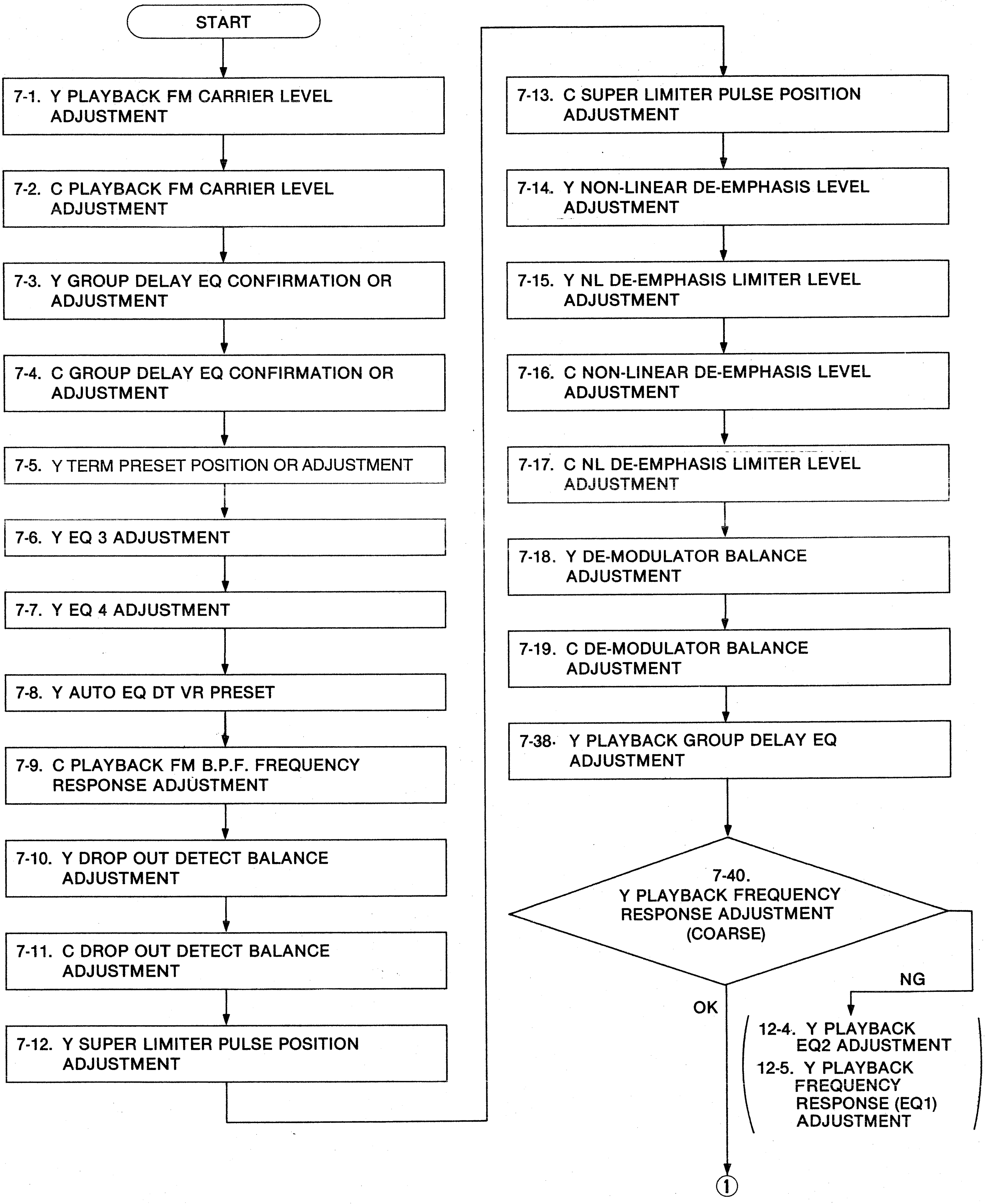
START
7-1. Y PLAYBACK FM CARRIER LEVEL ADJUSTMENT
7-2. C PLAYBACK FM CARRIER LEVEL ADJUSTMENT
7-3. Y GROUP DELAY EQ CONFIRMATION OR ADJUSTMENT
7-4. C GROUP DELAY EQ CONFIRMATION OR ADJUSTMENT
7-5. Y TERM PRESET POSITION OR ADJUSTMENT
7-6. Y EQ 3 ADJUSTMENT
7-7. Y EQ 4 ADJUSTMENT
7-8. Y AUTO EQ DT VR PRESET
7-9. C PLAYBACK FM B.P.F. FREQUENCY RESPONSE ADJUSTMENT
7-10. Y DROP OUT DETECT BALANCE ADJUSTMENT
7-11. C DROP OUT DETECT BALANCE ADJUSTMENT
7-12. Y SUPER LIMITER PULSE POSITION ADJUSTMENT
7-13. C SUPER LIMITER PULSE POSITION ADJUSTMENT
7-14. Y NON-LINEAR DE-EMPHASIS LEVEL ADJUSTMENT
7-15. Y NL DE-EMPHASIS LIMITER LEVEL ADJUSTMENT
7-16. C NON-LINEAR DE-EMPHASIS LEVEL ADJUSTMENT
7-17. C NL DE-EMPHASIS LIMITER LEVEL ADJUSTMENT
7-18. Y DE-MODULATOR BALANCE ADJUSTMENT
7-19. C DE-MODULATOR BALANCE ADJUSTMENT
7-38. Y PLAYBACK GROUP DELAY EQ ADJUSTMENT
7-40. Y PLAYBACK FREQUENCY RESPONSE ADJUSTMENT (COARSE)
NG
OK
12-4. Y PLAYBACK EQ2 ADJUSTMENT
12-5. Y PLAYBACK FREQUENCY RESPONSE (EQ1) ADJUSTMENT
①

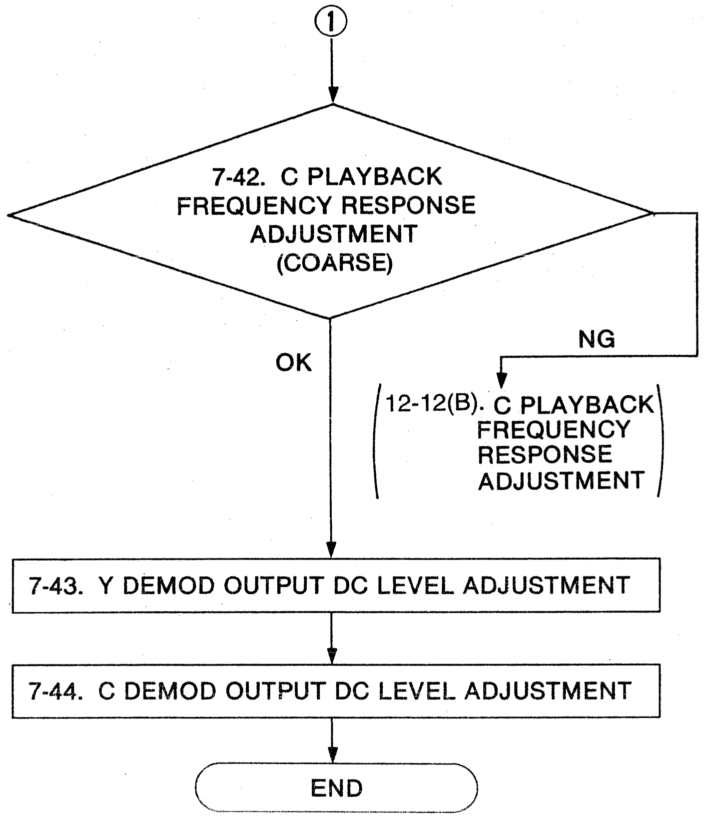
①
7-42. C PLAYBACK FREQUENCY RESPONSE ADJUSTMENT (COARSE)
OK
NG
12-12(B). C PLAYBACK FREQUENCY RESPONSE ADJUSTMENT
7-43. Y DEMOD OUTPUT DC LEVEL ADJUSTMENT
7-44. C DEMOD OUTPUT DC LEVEL ADJUSTMENT
END

MODULATION & DEMODULATION SECTION (1/2) (W3) FLOWCHART FOR AU-62H/AU-62

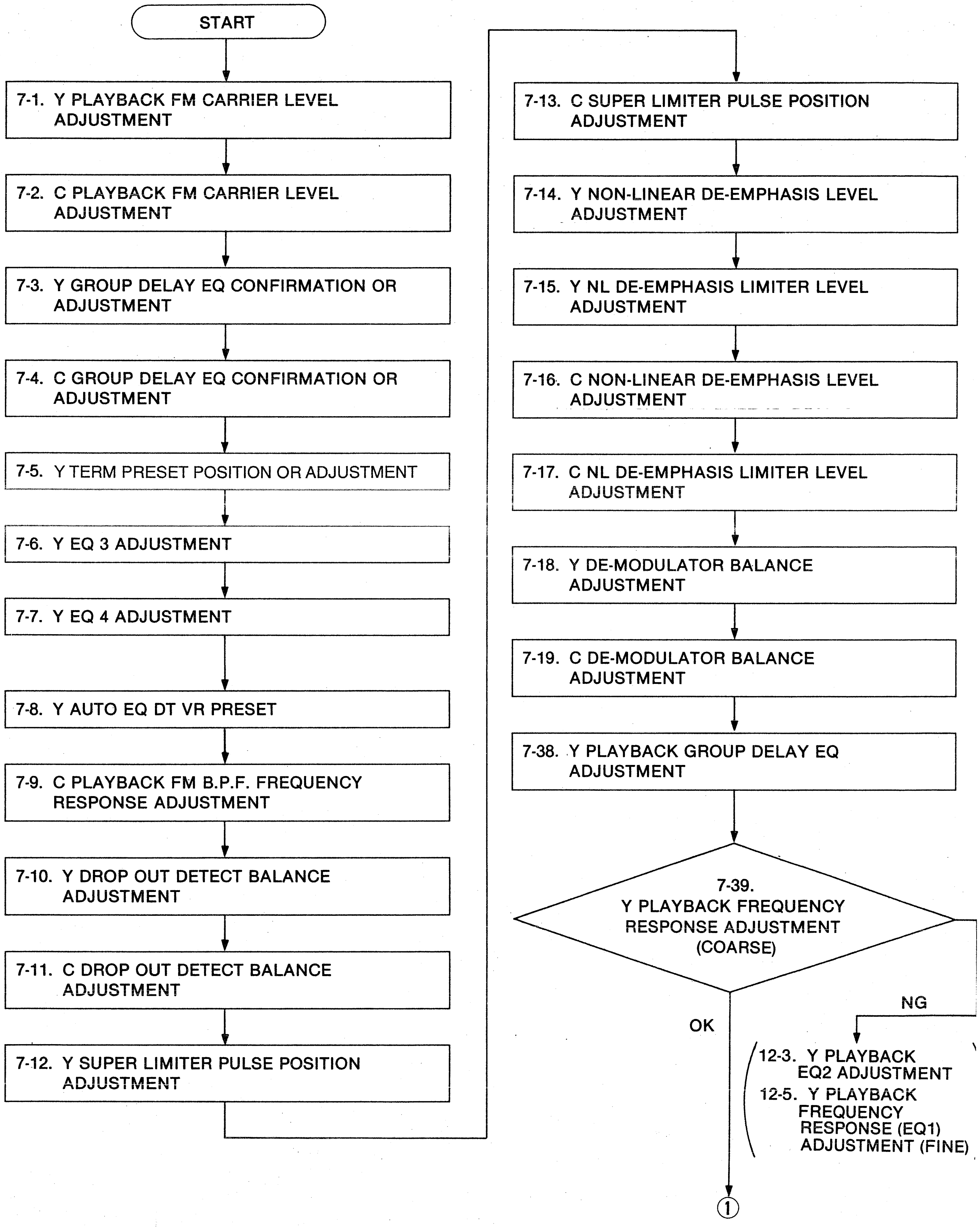
START
7-1. Y PLAYBACK FM CARRIER LEVEL ADJUSTMENT
7-2. C PLAYBACK FM CARRIER LEVEL ADJUSTMENT
7-3. Y GROUP DELAY EQ CONFIRMATION OR ADJUSTMENT
7-4. C GROUP DELAY EQ CONFIRMATION OR ADJUSTMENT
7-5. Y TERM PRESET POSITION OR ADJUSTMENT
7-6. Y EQ 3 ADJUSTMENT
7-7. Y EQ 4 ADJUSTMENT
7-8. Y AUTO EQ DT VR PRESET
7-9. C PLAYBACK FM B.P.F. FREQUENCY RESPONSE ADJUSTMENT
7-10. Y DROP OUT DETECT BALANCE ADJUSTMENT
7-11. C DROP OUT DETECT BALANCE ADJUSTMENT
7-12. Y SUPER LIMITER PULSE POSITION ADJUSTMENT
7-13. C SUPER LIMITER PULSE POSITION ADJUSTMENT
7-14. Y NON-LINEAR DE-EMPHASIS LEVEL ADJUSTMENT
7-15. Y NL DE-EMPHASIS LIMITER LEVEL ADJUSTMENT
7-16. C NON-LINEAR DE-EMPHASIS LEVEL ADJUSTMENT
7-17. C NL DE-EMPHASIS LIMITER LEVEL ADJUSTMENT
7-18. Y DE-MODULATOR BALANCE ADJUSTMENT
7-19. C DE-MODULATOR BALANCE ADJUSTMENT
7-38. Y PLAYBACK GROUP DELAY EQ ADJUSTMENT
7-39. Y PLAYBACK FREQUENCY RESPONSE ADJUSTMENT (COARSE)
NG
OK
12-3. Y PLAYBACK EQ2 ADJUSTMENT
12-5. Y PLAYBACK FREQUENCY RESPONSE (EQ1) ADJUSTMENT (FINE)
①

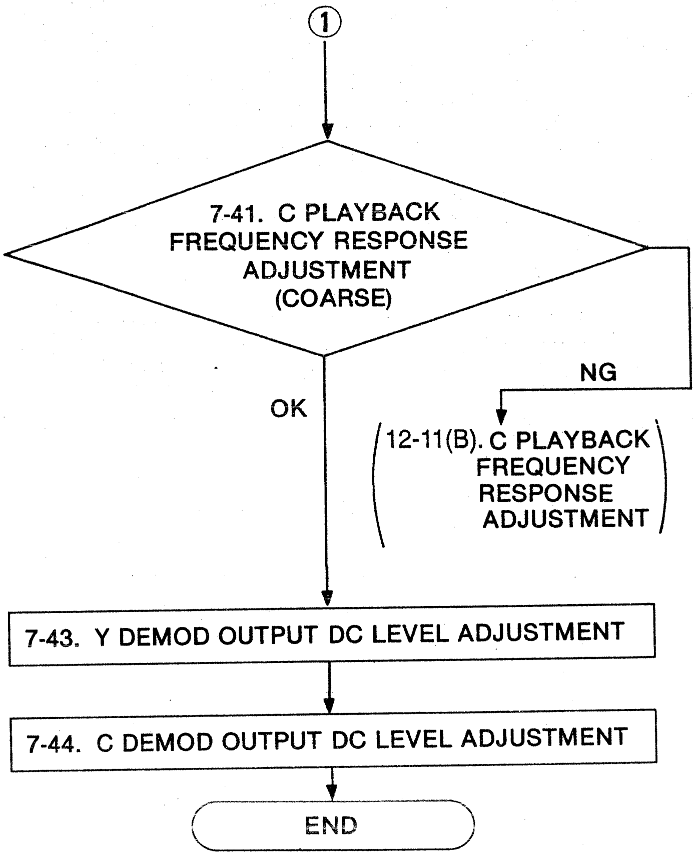
①
7-41. C PLAYBACK FREQUENCY RESPONSE ADJUSTMENT (COARSE)
OK
NG
(12-11(B). C PLAYBACK FREQUENCY RESPONSE ADJUSTMENT)
7-43. Y DEMOD OUTPUT DC LEVEL ADJUSTMENT
7-44. C DEMOD OUTPUT DC LEVEL ADJUSTMENT
END

7. MODULATION & DEMODULATION (W3) BOARD (1/2)

7-1. Y PLAYBACK FM CARRIER LEVEL ADJUSTMENT

(W3 MOD & DEMOD)

TEST POINT	MODE	TAPE USED	M.EQ.	INPUT SIGNAL	ADJUSTMENT
TP301 F29·AB (Trigger)	PLAY	ALIGNMENT TAPE COLOUR BAR	OSCILLOSCOPE	-------	VR301 <R/P (AT) CH2 LEV> VR303 <R/P (AT) CH1 LEV>

1. SCOPE CH1 : TP301
   SCOPE CH2 : F29·AB EDGE CONNECTOR (on W3) For Trigger
2. Adjust VR301 and VR303 so that the signal level at TP301 is 400 ± 50mVp-p.

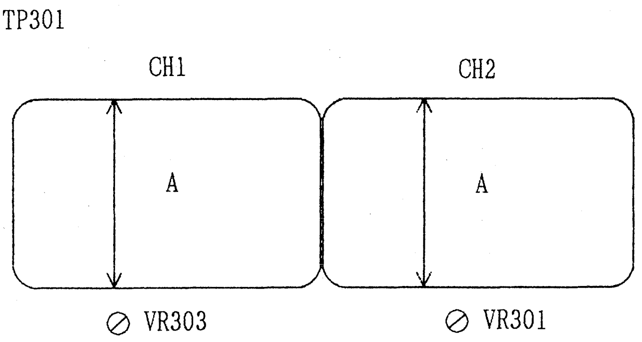

A = 400 ± 50mVp-p

7-2. C PLAYBACK FM CARRIER LEVEL ADJUSTMENT

(W3 MOD & DEMOD)

TEST POINT	MODE	TAPE USED	M.EQ.	INPUT SIGNAL	ADJUSTMENT
TP701 F33·AB (Trigger)	PLAY	ALIGNMENT TAPE COLOUR BAR	OSCILLOSCOPE	-------	VR701 (R/P CH2 LEV) VR702 (R/P CH1 LEV)

1. SCOPE CH1 : TP701
   SCOPE CH2 : F33·AB EDGE CONNECTOR (on W3) For Trigger
2. Adjust VR701 and VR702 so that the signal level at TP701 is 400 ± 50mVp-p.

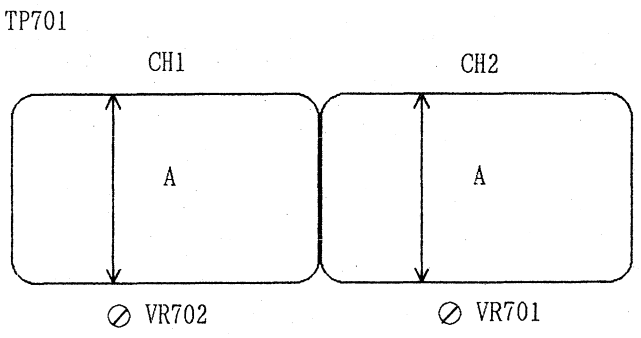

A = 400 ± 50mVp-p

7-3. Y GROUP DELAY EQ CONFIRMATION OR ADJUSTMENT

(W3 MOD & DEMOD)

TEST POINT	MODE	TAPE USED	M.EQ.	INPUT SIGNAL	ADJUSTMENT
TP302	PLAY	ALIGNMENT TAPE 12MHz RF SWEEP	OSCILLOSCOPE	-------	VL301 (Y G-D, EQ)

Step 1. MACHINE CONDITION	TJ301 (on W3) : OPEN CONTACT
Step 2. 1. SCOPE : TP302 2. Adjust VL301 so that the trap frequency (A) of line sweep becomes 7.7 ± 0.1MHz 3. TJ301 (on W3) : CLOSE CONTACT	TP302 ⊘ VL301 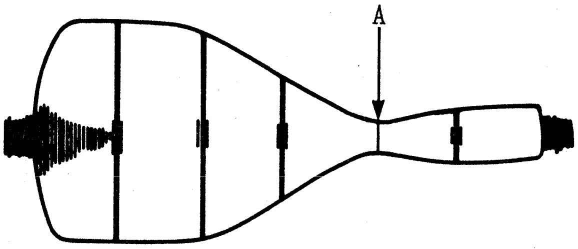 A = 7.7 ± 0.1MHz

7-4. C GROUP DELAY EQ CONFIRMATION OR ADJUSTMENT

(W3 MOD & DEMOD)

TEST POINT	MODE	TAPE USED	M.EQ.	INPUT SIGNAL	ADJUSTMENT
TP702	PLAY	ALIGNMENT TAPE 12MHz RF SWEEP	OSCILLOSCOPE	-------	VL701 (C G, D, EQ)

Step 1. MACHINE CONDITION	TJ701 (on W3) : OPEN CONTACT
Step 2. 1. SCOPE : TP702 2. Adjust VL701 so that the trap frequency (A) of line sweep becomes 6.0 ± 0.1MHz. 3. TJ701 (on W3) : CLOSE CONTACT	TP703 ⊘ VL702 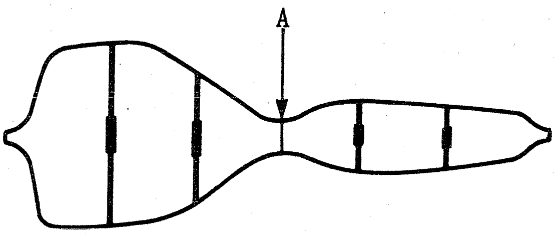 A = 6.0 ± 0.1MHz

7-5. Y TERM PRESET POSITION OR ADJUSTMENT (W3 MOD & DEMOD)

Note : Before performing this adjustment STEP, you need to "PRE-SET" the following pots : VR309, VR311, VR310.

Step 1. 1. Preset VR309 (TERM) to the 3 o'clock position.	⊘ VR309 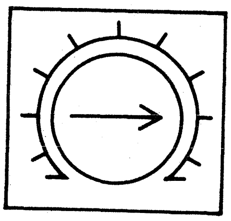

7-6. Y EQ 3 ADJUSTMENT (W3 MOD & DEMOD)

Step 1. 1. Preset VR311 (EQ3) to the 10 o'clock position.	⊘ VR311 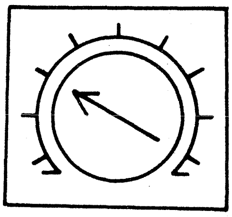

7-7. Y EQ 4 ADJUSTMENT (W3 MOD & DEMOD)

Step 1. 1. Turn VR310 fully clockwise.	⊘ VR310 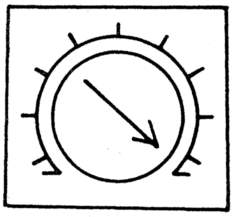

7-8. Y AUTO EQ DT VR PRESET (W3 MOD & DEMOD)

Step 1. 1. Preset VR 328 (A EQ DT V) to the centre position.	⊘ VR328 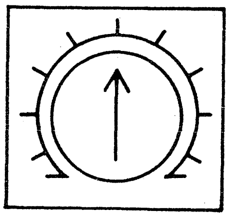

7-9. C PLAYBACK FM B.P.F. FREQUENCY RESPONSE ADJUSTMENT

(W3 MOD & DEMOD)

TEST POINT	MODE	TAPE USED	M.EQ.	INPUT SIGNAL	ADJUSTMENT
TP703	PLAY	ALIGNMENT TAPE 12MHz RF SWEEP	OSCILLOSCOPE	-------	VL702 (C BPF F.R.) SW704 (C SUPER LIM SW)

Step 1. MACHINE CONDITION	SW704 (on W3) : OFF TJ702 (on W3) : OPEN CONTACT
Step 2. 1. SCOPE : TP703 2. Adjust VL702 so that the trap frequency (A) of line sweep becomes 8.0 ± 0.1MHz	TP703 ∅ VL702 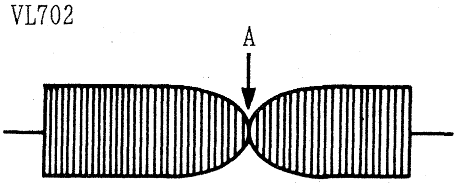 A = 8.0 ± 0.1MHz
Step 3. RESET MACHINE CONDITION	SW704 (on W3) : ON TJ702 (on W3) CLOSE CONTACT

7-10. Y DROP OUT DETECT BALANCE ADJUSTMENT

(W3 MOD & DEMOD)

TEST POINT	MODE	TAPE USED	M.EQ.	INPUT SIGNAL	ADJUSTMENT
TP307 F29·AB (Trigger) TP308	PLAY	ALIGNMENT TAPE COLOUR BAR	OSCILLOSCOPE	-------	VR317 (LIM IN RF LEV.) VR321 (Y DO BAL) SW304 (Y SUPER LIM SW)

Step 1. MACHINE CONDITION	SW304 (on W3) : OFF
Step 2. 1. SCOPE CH1 : TP307 SCOPE CH2 : F29·AB TERMINAL (Trigger) 2. Turn VR317 fully clockwise until the RF level becomes 0 (zero).	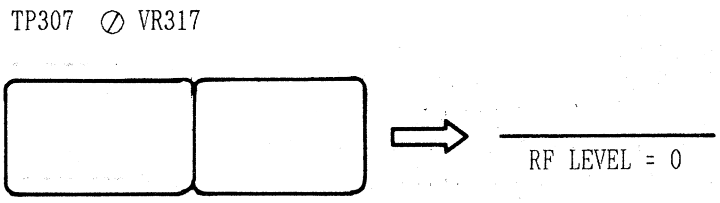 TP307 ⊘ VR317 RF LEVEL = 0
Step 3. 1. SCOPE : TP308 2. SCOPE MODE : DC MODE 3. Adjust VR321 for minimum DC Level.	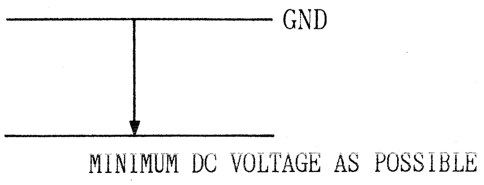 GND MINIMUM DC VOLTAGE AS POSSIBLE
Step 4. 1. SCOPE CH1 : TP307 SCOPE CH2 : F29·AB TERMINAL (Trigger) 2. Adjust VR317 so that the RF level becomes 300mVp-p.	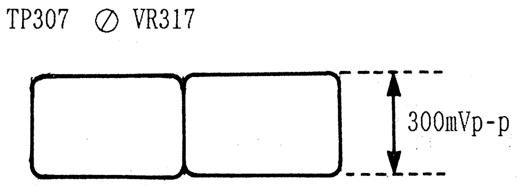 TP307 ⊘ VR317 300mVp-p
Step 5. 1. SW304 : ON (SUPER LIMITER ON)	

7-11. C DROP OUT DETECT BALANCE ADJUSTMENT

(W3 MOD & DEMOD)

TEST POINT	MODE	TAPE USED	M.EQ.	INPUT SIGNAL	ADJUSTMENT
TP703 TP704	PLAY	ALIGNMENT TAPE COLOUR BAR	OSCILLOSCOPE	-------	VR714 (LIM IN RF LEV.) VR718 (Y DO BAL)

Step 1. MACHINE CONDITION	SW704 (on W3) : OFF
Step 2. 1. SCOPE CH1 : TP703 SCOPE CH2 : F33·AB TERMINAL (Trigger) 2. Turn VR714 fully clockwise until the RF level becomes 0 (zero).	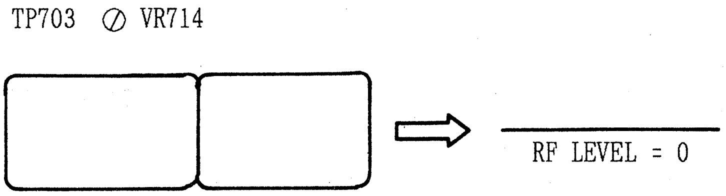 TP703 ⊘ VR714 RF LEVEL = 0
Step 3. 1. SCOPE : TP704 2. SCOPE MODE : DC MODE 3. Adjust VR718 for minimum DC Level.	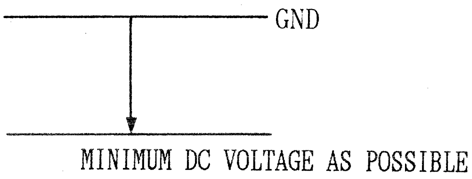 GND MINIMUM DC VOLTAGE AS POSSIBLE
Step 4. 1. SCOPE CH1 : TP703 SCOPE CH2 : F33·AB TERMINAL (Trigger) 2. Adjust VR714 so that the RF level becomes 300mVp-p.	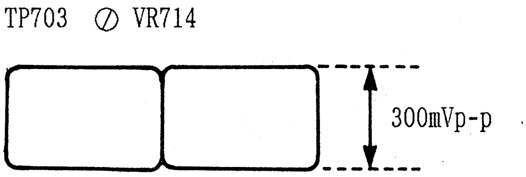 TP703 ⊘ VR714 300mVp-p
Step 5. 1. SW704 : OFF	At this time, SW704 isn't used, leave it in the OFF position.

7-12. Y SUPER LIMITER PULSE POSITION ADJUSTMENT

(W3 MOD & DEMOD)

TEST POINT	MODE	TAPE USED	M.EQ.	INPUT SIGNAL	ADJUSTMENT
TP307	PLAY	ALIGNMENT TAPE COLOUR BAR	OSCILLOSCOPE	---------	VC301 (Y P. POS)

Step 1.

1. Play back the colour bar portion of the Alignment Tape.
2. SCOPE : TP307
3. SCOPE SETTING : without 20MHz Filter
4. SW304 : ON (Super Limiter function)
5. Adjust VC301 so that the spike pulse is located on the RF peak position as shown in figure.

TP307 ⊘ VC301

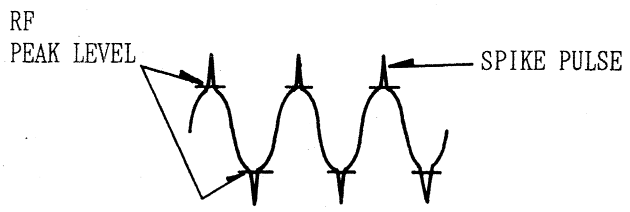

SCOPE TIME/DIV : 5 nsec (Max.)

7-13. C SUPER LIMITER PULSE POSITION ADJUSTMENT

(W3 MOD & DEMOD)

TEST POINT	MODE	TAPE USED	M.EQ.	INPUT SIGNAL	ADJUSTMENT
TP703	PLAY	ALIGNMENT TAPE COLOUR BAR	OSCILLOSCOPE	---------	VC701 (C P. POS)

Step 1.

1. Play back the colour bar portion of the Alignment Tape.
2. SCOPE : TP703
3. SCOPE SETTING : without 20MHz Filter
4. SW704 : ON (Super Limiter function)
5. Adjust VC701 so that the spike pulse is located on the RF peak position as shown in figure.

TP703 ⊘ VC701

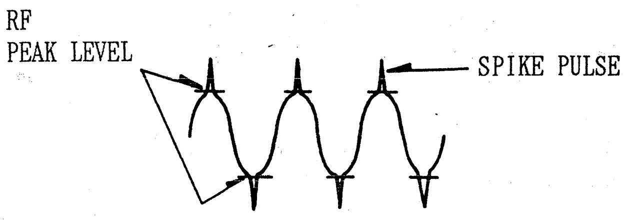

SCOPE TIME/DIV : 5 nsec (Max.)

7-14. Y NON-LINEAR DE-EMPHASIS LEVEL ADJUSTMENT

(W3 MOD & DEMOD)

TEST POINT	MODE	TAPE USED	M.EQ.	INPUT SIGNAL	ADJUSTMENT
TP309	PLAY	ALIGNMENT TAPE COLOUR BAR	OSCILLOSCOPE (DC mode)	-------	VR322 (NL LEV)

SCOPE SETTING : DC mode

TP309 ⊘ VR322

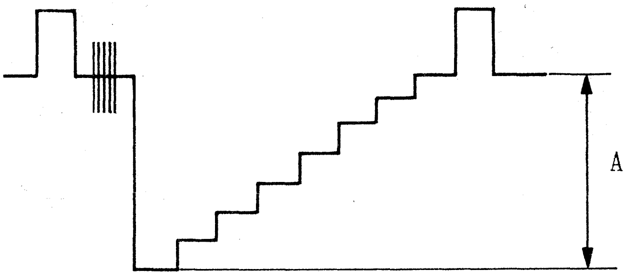

A = 1.1 ± 0.02Vp-p

7-15. Y NL DE-EMPHASIS LIMITER LEVEL ADJUSTMENT (FOR AU-62H/63H and AU-62/63)

(W3 MOD & DEMOD)

TEST POINT	MODE	TAPE USED	M.EQ.	INPUT SIGNAL	ADJUSTMENT
TP310	PLAY	ALIGNMENT TAPE 100% BOW TIE	OSCILLOSCOPE	-------	VR323 (NL LIM BAL) VR324 (NL LIM LEV)

1. Playback 100% BOW TIE signal and expand it.
2. Adjust VR324 so that V1 becomes 360 ± 5mVp-p.
3. SCOPE SETTING : DC Mode
4. Adjust VR323 so that the level V2 equals the level V3 (50 : 50%).

TP310

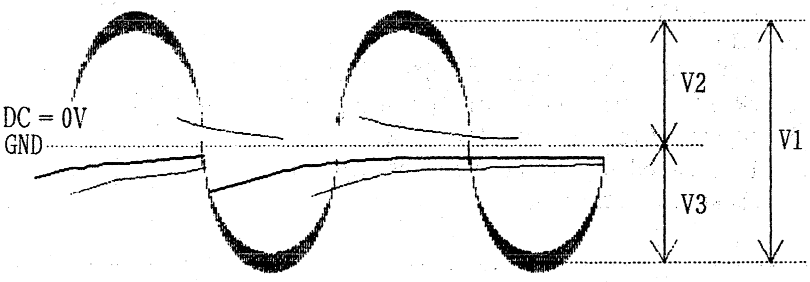

⊘ VR324 : V1 = 360 ± 5mVp-p
⊘ VR323 : V2 = V3

7-16. C NON-LINEAR DE-EMPHASIS LEVEL ADJUSTMENT

(W3 MOD & DEMOD)

TEST POINT	MODE	TAPE USED	M.EQ.	INPUT SIGNAL	ADJUSTMENT
TP706	PLAY	ALIGNMENT TAPE COLOUR BAR	OSCILLOSCOPE	-------	VR719 (NL LEV)

1. Adjust VR719 so that the Pr signal level at TP706 is 1.1 ± 0.02Vp-p.

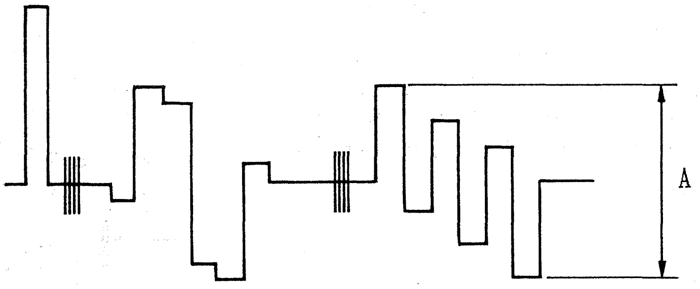

A = 1.1 ± 0.02Vp-p

7-17. C NL DE-EMPHASIS LIMITER LEVEL ADJUSTMENT (FOR AU-62H/63H and AU-62/63)

(W3 MOD & DEMOD)

TEST POINT	MODE	TAPE USED	M.EQ.	INPUT SIGNAL	ADJUSTMENT
TP707	PLAY	ALIGNMENT TAPE 100% BOW TIE	OSCILLOSCOPE	-------	VR720 (LIM BAL) VR721 (NL LIM LEV)

1. Play back the 100% BOW TIE portion and expand Pb portion.
2. Adjust VR721 so that the level V1 becomes 400mV ± 5mVp-p.
3. SCOPE SETTING : DC mode.
4. Adjust VR720 so that the level V2 equals the level V3 (50 : 50%).

TP707 ⊘ VR720, VR721

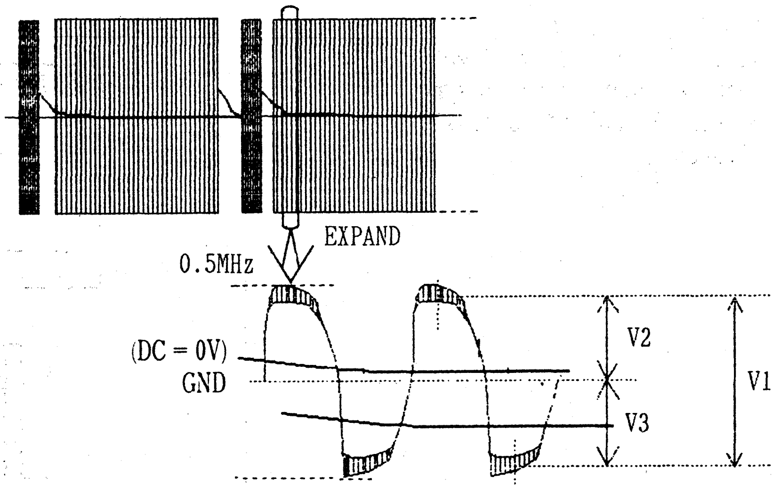

⊘ VR721 : V1 = 400 ± 5mVp-p
⊘ VR720 : V2 = V3

7-18. Y DE-MODULATOR BALANCE ADJUSTMENT

(W3 MOD & DEMOD)

TEST POINT	MODE	TAPE USED	M.EQ.	INPUT SIGNAL	ADJUSTMENT
TP309	PLAY	ALIGNMENT TAPE COLOUR BAR	OSCILLOSCOPE	----------	VR318 (LIM BAL) VR319 (DEMOD BAL)

Step 1.

1. SCOPE : TP309
2. Adjust VR318 and VR319 mutually so that the beat noise at sync tip portion is nullified as shown in figure.

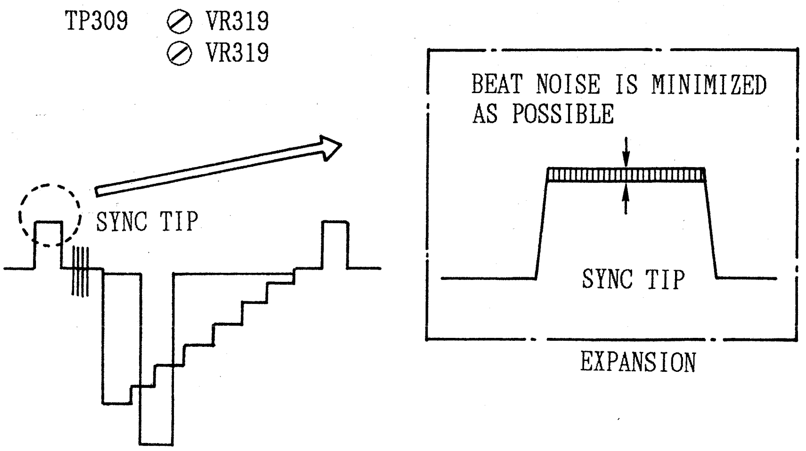
TP309
⊘ VR319
⊘ VR319
BEAT NOISE IS MINIMIZED AS POSSIBLE
SYNC TIP
SYNC TIP
EXPANSION

7-19. C DE-MODULATOR BALANCE ADJUSTMENT

(W3 MOD & DEMOD)

TEST POINT	MODE	TAPE USED	M.EQ.	INPUT SIGNAL	ADJUSTMENT
TP706	PLAY	ALIGNMENT TAPE COLOUR BAR	OSCILLOSCOPE	----------	VR715 (LIM BAL) VR716 (DEMOD BAL)

Step 1.

1. SCOPE : TP706
2. Adjust VR715 and VR716 mutually so that the beat noise at sync tip portion is nullified as shown in figure.

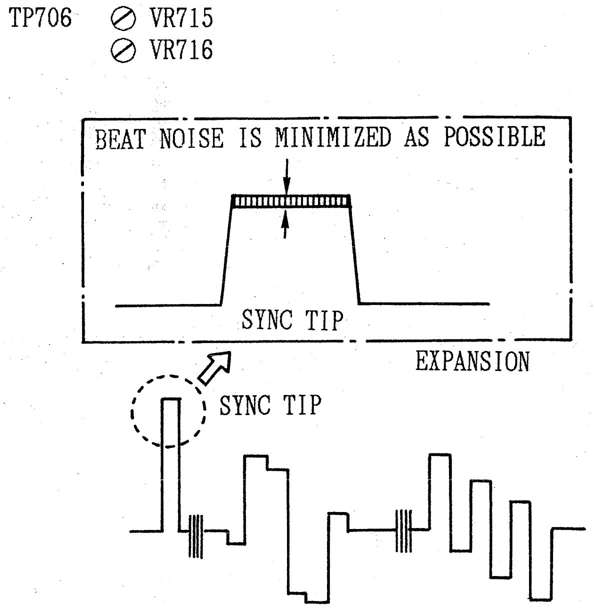
TP706
⊘ VR715
⊘ VR716
BEAT NOISE IS MINIMIZED AS POSSIBLE
SYNC TIP
EXPANSION
SYNC TIP

7-20. VIDEO CLIP ADJUSTMENT (FOR AU-65H / AU-65)

(W3 MOD & DEMOD)

TEST POINT	MODE	TAPE USED	M.EQ.	INPUT SIGNAL	ADJUSTMENT
TP1	E-E (EJECT)	-------	WFM OR OSCILLOSCOPE	COMPONENT COLOUR BAR LEVEL REFERENCE SIGNAL	VR3 (Y CLIP)

Step 1.

1. SCOPE : TP1
2. Adjust VR3 so that level B as shown in figure.

Note:
Measure from PEDESTAL LEVEL TO PEAK WHITE LEVEL.

TP1 ⊘ VR3

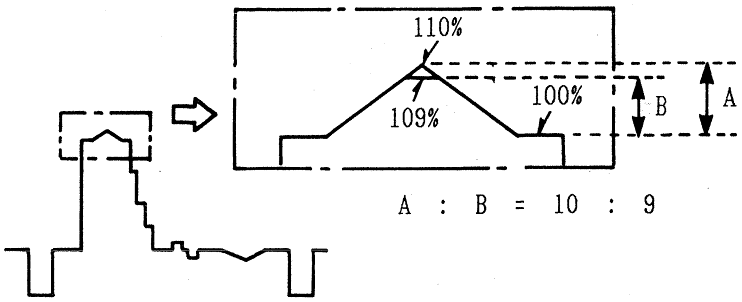

A : B = 10 : 9

7-21. Y NON-LINEAR PRE-EMPHASIS LEVEL ADJUSTMENT (FOR AU-65H / AU-65)

(W3 MOD & DEMOD)

TEST POINT	MODE	TAPE USED	M.EQ.	INPUT SIGNAL	ADJUSTMENT
TP 4	E-E (EJECT)	-------	OSCILLOSCOPE	COMPONENT COLOR BAR	VR1 (Y NLE LEV)

TP4 ⊘ VR1

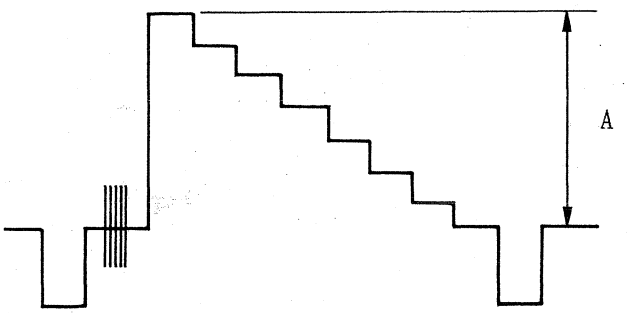

A = 1.1 ± 0.02Vp-p

7-22. VIDEO/SYNC METER ADJUSTMENT (FOR AU-65H / AU-65)

(W3 MOD & DEMOD)

TEST POINT	MODE	TAPE USED	M.EQ.	INPUT SIGNAL	ADJUSTMENT
Video Level Meter (on Front Panel)	PLAY	COMPONENT 100% COLOUR BAR	--------	--------	VR7 (V/S LEV.)

Step 1.

1. SW1 (on W3) : VIDEO POSITION
2. Adjust VR7 so that the meter indicates 100% as shown in figure.
3. SW1 (on W3) : SYNC POSITION
4. Confirm that the meter indicates 100 ± 10%.
5. SW1 (on W3) : VIDEO POSITION

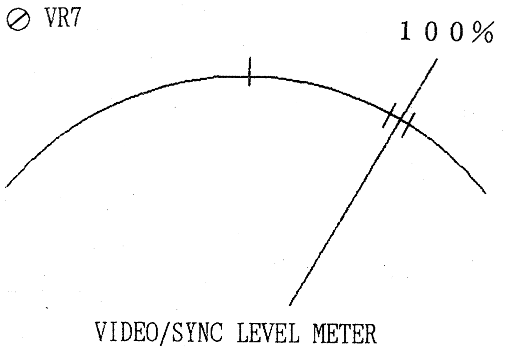

7-23. Y NL EMPHASIS LIMITER LEVEL ADJUSTMENT (FOR AU-65H / AU-65)

(W3 MOD & DEMOD)

TEST POINT	MODE	TAPE USED	M.EQ.	INPUT SIGNAL	ADJUSTMENT
TP3	E-E (EJECT)	-------	OSCILLOSCOPE	COMPONENT 100% BOW TIE	VR5 (LIM BAL) VR4 (NL LIM LEV)

Step 1.

1. SCOPE : TP3
2. Adjust VR4 so that the level V1 becomes 360mV ± 5mVp-p.
3. SCOPE SETTING : DC mode
4. Adjust VR5 so that the level V2 equals the level V3 (50 - 50%).

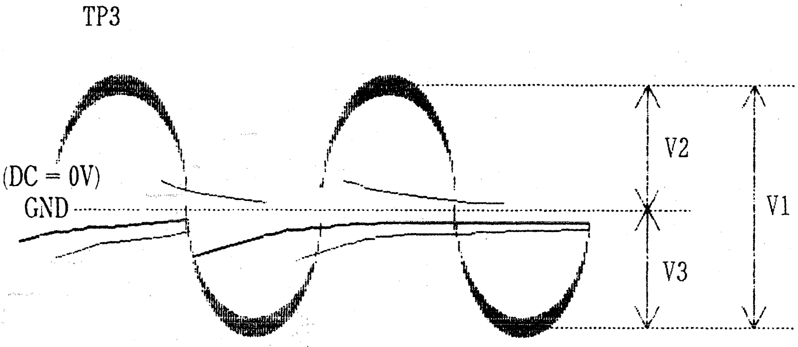

⊘ VR4 : V1 = 360mV ± 5mVp-p
⊘ VR5 : V2 = V3

7-24. C NON-LINEAR PRE-EMPHASIS LEVEL ADJUSTMENT (FOR AU-65H / AU-65)

(W3 MOD & DEMOD)

TEST POINT	MODE	TAPE USED	M.EQ.	INPUT SIGNAL	ADJUSTMENT
TP202	E-E (EJECT)	-------	OSCILLOSCOPE	COMPONENT 100% COLOUR BAR	VR201 (C NL LEV)

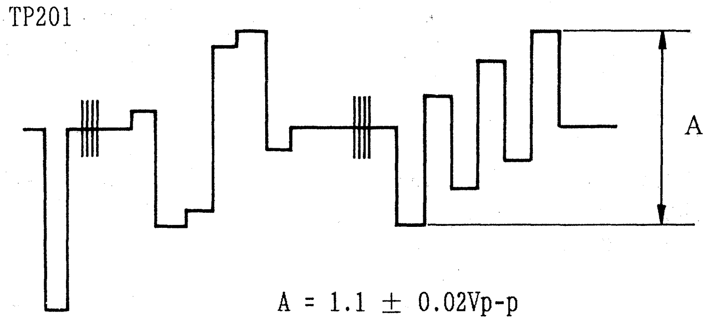

A = 1.1 ± 0.02Vp-p

7-25. C NON-LINEAR LIMITER ADJUSTMENT (FOR AU-65H / AU-65)

(W3 MOD & DEMOD)

TEST POINT	MODE	TAPE USED	M.EQ.	INPUT SIGNAL	ADJUSTMENT
TP203	E-E (EJECT)	-------	OSCILLOSCOPE	COMPONENT 100% BOW TIE	VR202 (LIM BAL) VR203 (NL LIM LEV)

1. SCOPE : TP203
2. Observe the CTCM signal and expand it.
3. Adjust VR203 so that the level V1 becomes 400mV ± 5mVp-p.
4. SCOPE SETTING : DC mode
5. Adjust VR202 so that the level V2 equals the level V3 (50 : 50%).

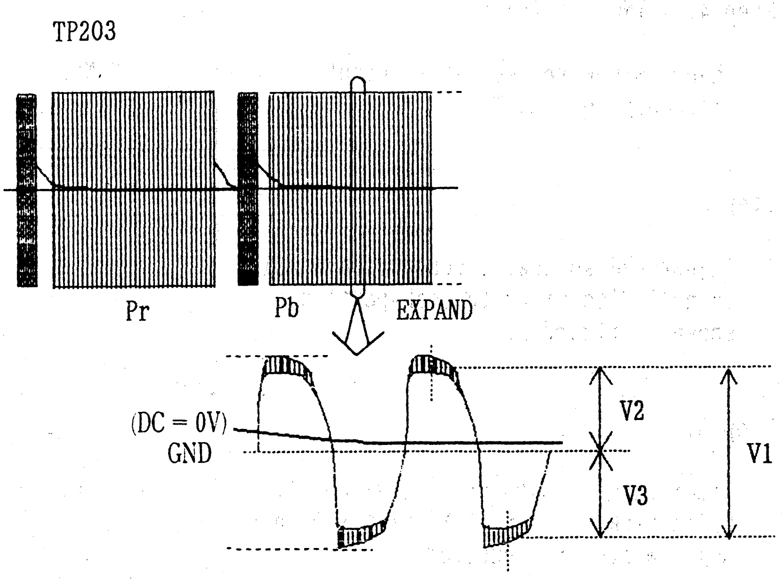

⊘ VR203 : V1 = 400mV ± 5mVp-p
⊘ VR202 : V2 = V3

7-28(B). Y MODULATOR BALANCE ADJUSTMENT (BY USING OSCILLOSCOPE) (FOR AU-65H / AU-65)

(W3 MOD & DEMOD)

TEST POINT	MODE	TAPE USED	M.EQ.	INPUT SIGNAL	ADJUSTMENT
COMPONENT Y OUT	E-E (EJECT)	-------	OSCILLOSCOPE	COMPONENT 60% H. SWEEP	VR11 (Y MOD BAL)

Step 1.

1. SCOPE : COMPONENT Y OUT
2. Adjust VR11 so the "A" portion High Frequency moire is minimized.

COMPONENT Y OUT

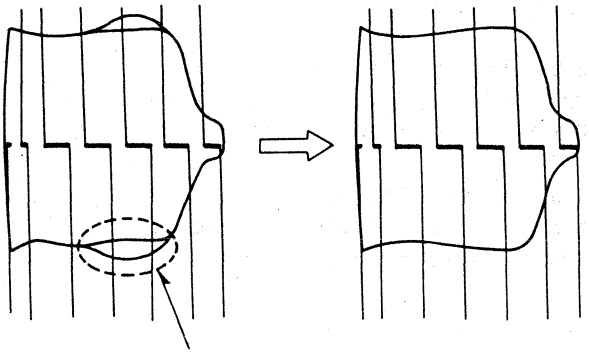

7-29. Y DEVIATION CONFIRMATION (FOR AU-65H / AU-65)

(W3 MOD & DEMOD)

TEST POINT	MODE	TAPE USED	M.EQ.	INPUT SIGNAL	ADJUSTMENT
TP309	PLAY ↓ STOP	ALIGNMENT TAPE COLOUR BAR	OSCILLOSCOPE	COMPONENT 100% COLOUR BAR	VR6 (Y DEV)

Step 1.

1. SCOPE : TP309
2. Play back the colour bar portion of the Alignment Tape.
3. Measure the level A.
4. Place the unit in the E-E mode.(STOP)
5. Compare the level of Alignment Tape Play back signal and the level of E-E colour bar.
6. If it is not same level ∗, adjust VR6 so that the E-E output level becones same level of Alignment Tape Play back colour bar level.

∗Note:
Make sure the Y WHITE & DARK CLIP are readjusted (7-27).

TP309

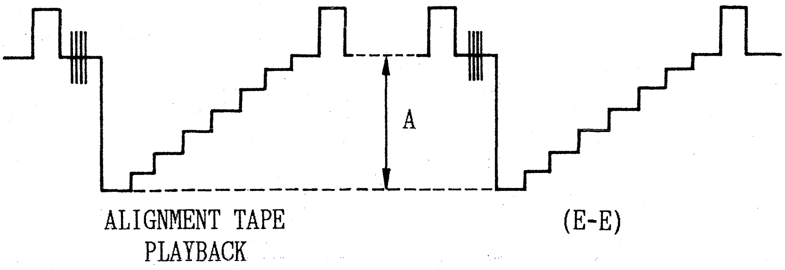

ALIGNMENT TAPE PLAYBACK SIGNAL LEVEL (A)
= E-E OUTPUT SIGNAL LEVEL (B)

7-30. C CLAMP PUSE POSITION ADJUSTMENT (FOR AU-65H / AU-65)

(W3 MOD & DEMOD)

TEST POINT	MODE	TAPE USED	M.EQ.	INPUT SIGNAL	ADJUSTMENT
TP201 TP204	E-E (EJECT)	-------	OSCILLOSCOPE	COMPONENT 100% COLOUR BAR	VR205 (C CLAMP POS)

Step 1. MACHINE CONDITION	1. INPUT SELECT : COMPONENT (on Pull Out Drawer) 2. YC/COMPONENT SELECT : COMPONENT (on Front Sub Panel) 3. SW201 : NOT TEST POSITION
Step 2. 1. SCOPE CH1 : TP201 SCOPE CH2 : TP204 2. Adjust VR205 so that the period (A) is 0.7 ± 0.1μsec. 3. Confirm that the pulse width (B) is 1.2 ± 0.2μsec. colour bar level (A).	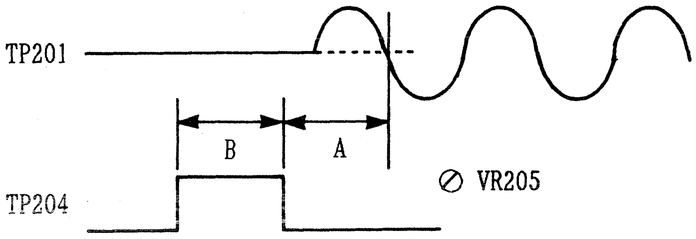 A = 0.7 ± 0.1μS (ADJ) B = 1.2 ± 0.2μS (CONFIRMATION)

7-31. C FM DEVIATION ADJUSTMENT (FOR AU-65H / AU-65)

(W3 MOD & DEMOD)

TEST POINT	MODE	TAPE USED	M.EQ.	INPUT SIGNAL	ADJUSTMENT
TP711 TP706	E-E (EJECT)	-------	OSCILLOSCOPE	Y/CTCM COLOUR BAR	VR207 (DARK CLIP) VR208 (WHITE CLIP) VR204 (C DEV.) VR206 (C BLK FREQ)

Step 1. MACHINE CONDITION	VR207 : Fully Counterclockwise (To release clip) VR208 : Fully Counterclockwise (To release clip)
Step 2. 1. Sinewave Signal to TP711. 2. Set Sinewave Generator Output Frequency Setting To :	6.2 MHz ± 0.01 MHz (0.2 ~ 0.4 Vp-p)
Step 3. 1. Connect scope to TP706 2. Adjust VR206 so that frequency beat noise is nullified at blanking portion as shown in figure.	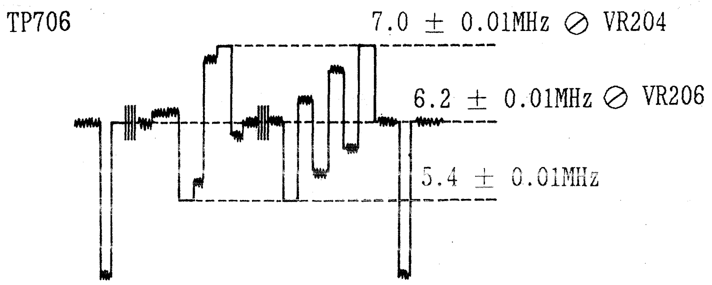 TP706 7.0 ± 0.01MHz ⊘ VR204 6.2 ± 0.01MHz ⊘ VR206 5.4 ± 0.01MHz
Step 4. Change Sinewave Generator Output Frequency Setting To :	7.0MHz ± 0.01MHz (0.2 ~ 0.4Vp-p)
Step 5. 1. Adjust VR204 so that frequency beat noise is nullified at red portion of Pr signal as shown in figure 1.	
Step 6. Then change the frequency of the sinewave generator to 4.8MHz (±0.01KHz) and confirm that the beat does not occur at cyan portion of Pr signal. If it is not, repeat from steps 5 and 6.	
Note: After this adjustment, the C WHITE/DARK CLIP adjustments are required.	Go to SECTION 7-32

7-32. C WHITE & DARK CLIP ADJUSTMENT
(FOR AU-65H / AU-65)

(W3 MOD & DEMOD)

TEST POINT	MODE	TAPE USED	M.EQ.	INPUT SIGNAL	ADJUSTMENT
TP205	E-E (EJECT)	-------	OSCILLOSCOPE	PULSE & BAR 3T 60% H SWEEP	VR208 (+ CLIP) VR207 (- CLIP)

Step 1.

1. SCOPE : TP205
2. Adjust VR208 so that the A portion (top of sweep marker) 200 ± 5% as shown in figure .
3. Adjust VR207 so that the B portion is 200% ± 5% as shown in figure.

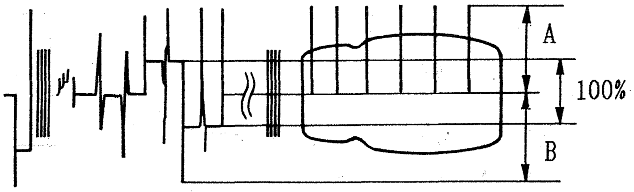

A = 200% ± 5% (VR208)
B = 200% ± 5% (VR207)

7-33(A). C MODULATOR BALANCE ADJUSTMENT
(BY USING SPECTRAM ANALYZER)
(FOR AU-65H / AU-65)

(W3 MOD & DEMOD)

TEST POINT	MODE	TAPE USED	M.EQ.	INPUT SIGNAL	ADJUSTMENT
TP207	E-E (EJECT)	-------	SPECTRUM ANALYZER	COMPONENT 50% WHITE	VR209 (C MOD BAL)

1. Adjust VR209 so that the second harmonic (12.4 MHz) carrier level is minimized (Better than -40dB)

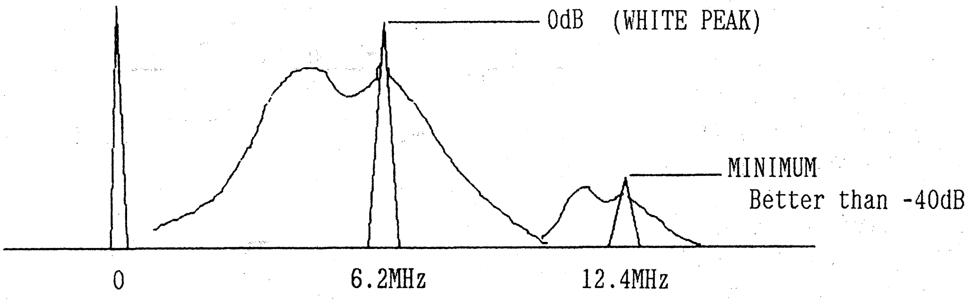

⊘ VR209 : 12.4MHz···MINIMUM

7-33(B). C MODULATOR BALANCE ADJUSTMENT (BY USING OSCILLOSCOPE) (FOR AU-65H / AU-65)

(W3 MOD & DEMOD)

TEST POINT	MODE	TAPE USED	M.EQ.	INPUT SIGNAL	ADJUSTMENT
COMPONENT Pr/Pb OUT	E-E (EJECT)	-------	OSCILLOSCOPE	COMPONENT 60% H. SWEEP	VR209 (C MOD BAL)

Step 1.

1. SCOPE : COMPONENT Pr/Pb OUT
2. Adjust VR209 so the "A" portion High Frequency moire is minimized.

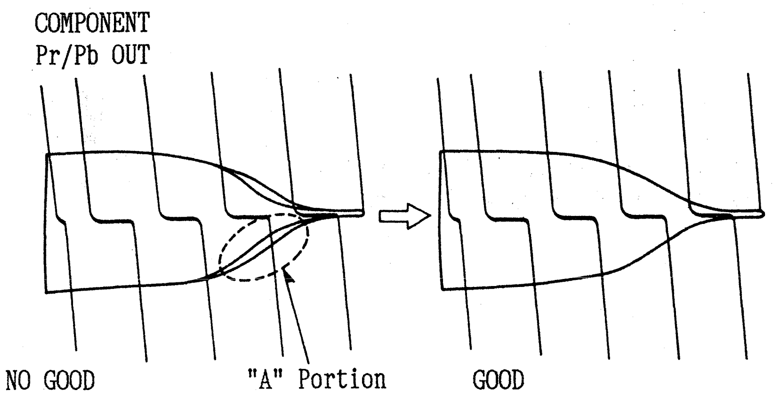

7-34. C DEVIATION CONFIRMATION (FOR AU-65H / AU-65)

(W3 MOD & DEMOD)

TEST POINT	MODE	TAPE USED	M.EQ.	INPUT SIGNAL	ADJUSTMENT
TP706	PLAY ↓ STOP	ALIGNMENT TAPE COLOUR BAR	OSCILLOSCOPE	COMPONENT 100% COLOUR BAR	VR204 (C DEV)

Step 1.

1. SCOPE : TP706
2. Play back the 100% colour bar portion of the Alignment Tape.
3. Measure the level A.
4. Place the unit in the E-E mode (STOP).
5. Compare the level A of the Alignment Tape play back signal and the level B of E-E colour bar.
6. If it is not same level ∗, adjust VR204 so that the E-E output level(B) becomes same level of the Alignment Tape Play back colour bar level (A).

∗Note:
Make sure the C WHITE & DARK CLIP are adjusted (7-32).

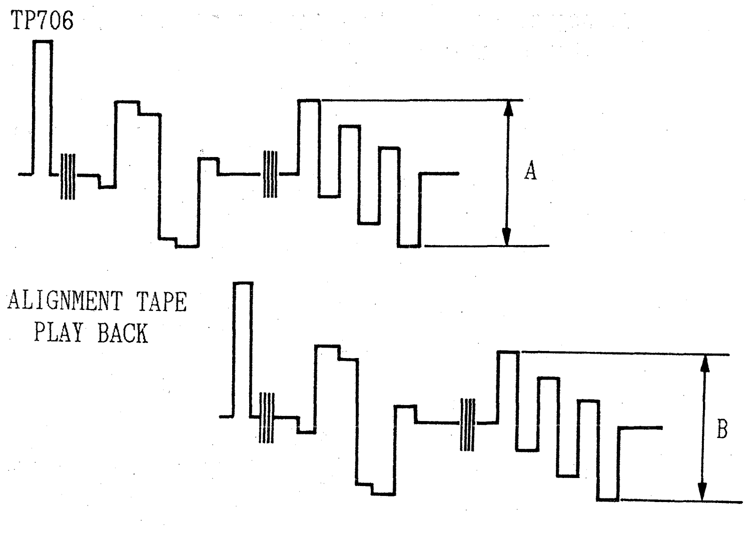

ALIGNMENT TAPE PLAYBACK SIGNAL LEVEL (A)
= E-E OUTPUT SIGNAL LEVEL (B)

7-35(A). C REC FM B.P.F. FREQUENCY RESPONSE ADJUSTMENT (FACTORY ADJ.) (FOR AU-65H / AU-65)

(W3 MOD & DEMOD)

TEST POINT	MODE	TAPE USED	M.EQ.	INPUT SIGNAL	ADJUSTMENT
TP206 TPG202 TP207	E-E (EJECT)	-------	OSCILLOSCOPE	LINE SWEEP (0.1MHz ~ 12MHz) Shibasoku TO TP206 (HOT) TPG202 (GND)	VL201 (C REC BPF F.R.)

Step 1.
MACHINE CONDITION

SW202 (on W3) : TEST POSITION
TJ201 (on W3) : OPEN CONTACT

Step 2.

1. Supply a Line Sweep Signal (0.1MHz ~ 12MHz, 500mVp-p at TP207 to TP206 (HOT) and TPG202 (GND).
2. SCOPE CH1 : TP207
   SCOPE CH2 : Trigger from Generator
3. Adjust VL201 so that the trap frequency (A) of line sweep becomes become 9.0 ± 0.1MHz.
4. SW202 (on W3) : NOT TEST POSITION
   TJ201 (on W3) : CLOSE CONTACT

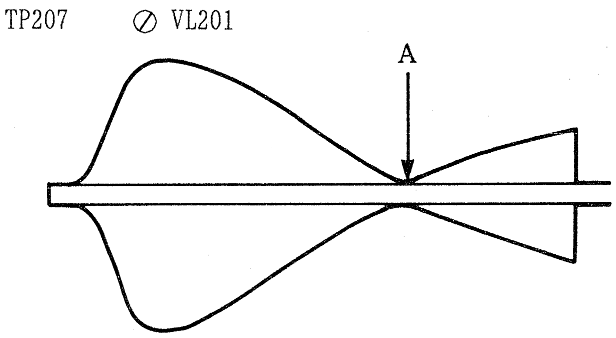

A = 9.0 ± 0.1MHz

7-35(B). C REC FM B.P.F. FREQUENCY RESPONSE ADJUSTMENT (FIELD ADJ.) (FOR AU-65H / AU-65)

(W3 MOD & DEMOD)

TEST POINT	MODE	TAPE USED	M.EQ.	INPUT SIGNAL	ADJUSTMENT
TP207 TP206 TP302	PLAY	ALIGNMENT TAPE RF SWEEP (0 ~ 12 MHz)	OSCILLOSCOPE	----------	VL201 (C REC BPF F.R.)

Step 1.
MACHINE CONDITION

SW202 (on W3) : TEST POSITION
TJ201 (on W3) : OPEN CONTACT

Step 2.

1. Connect a jumper wire between TP302 and TP206.
2. Play back the RF SWEEP portion of the Alignment Tape.
3. SCOPE : TP207
4. Adjust VL201 so that the trap frequency (A) of line sweep becomes 9.0 ± 0.1MHz.
5. SW202 (on W3) : NOT TEST POSITION
   TJ201 (on W3) : CLOSE CONTACT

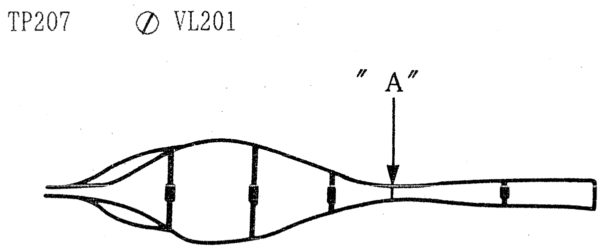

7-36. Y NON LINEAR DE-EMPHASIS LIMITER LEVEL ADJUSTMENT (FOR AU-65H / AU-65)

(W3 MOD & DEMOD)

TEST POINT	MODE	TAPE USED	M.EQ.	INPUT SIGNAL	ADJUSTMENT
TP310	E-E (EJECT)	-------	OSCILLOSCOPE	COMPONENT 100% BOW TIE	VR323 (NL LIM BAL) VR324 (NL LIM LEV)

1. SCOPE : TP310
2. Adjust VR324 so that the level V1 becomes 360mV ± 5mVp-p.
3. SCOPE SETTING : DC mode
4. Adjust VR323 so that the level V2 equals the level V3 (50 : 50%).

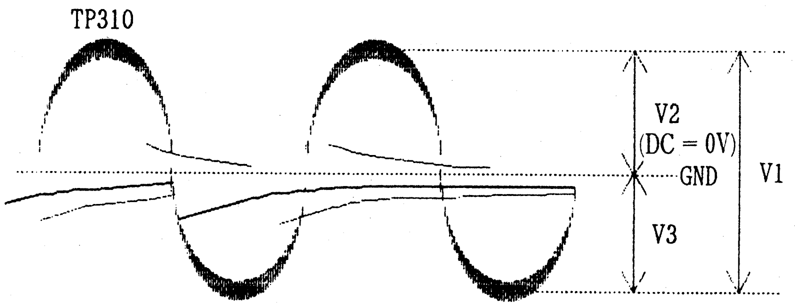

⊘ VR324 : V1 = 360mV ± 5mVp-p
⊘ VR323 : V2 = V3

7-37. C NON LINEAR DE-EMPHASIS LIMITER ADJUSTMENT (FOR AU-65H / AU-65)

(W3 MOD & DEMOD)

TEST POINT	MODE	TAPE USED	M.EQ.	INPUT SIGNAL	ADJUSTMENT
TP707	E-E (EJECT)	-------	OSCILLOSCOPE	COMPONENT 100% BOW TIE	VR720 (LIM BAL) VR721 (NL LIM LEV)

1. Observe the CTCM signal and expand it.
2. Adjust VR721 so that the level V1 becomes 400mV ± 5mVp-p.
3. SCOPE SETTING : DC mode
4. Adjust VR720 so that the level V2 equals the level V3 (50 : 50%).

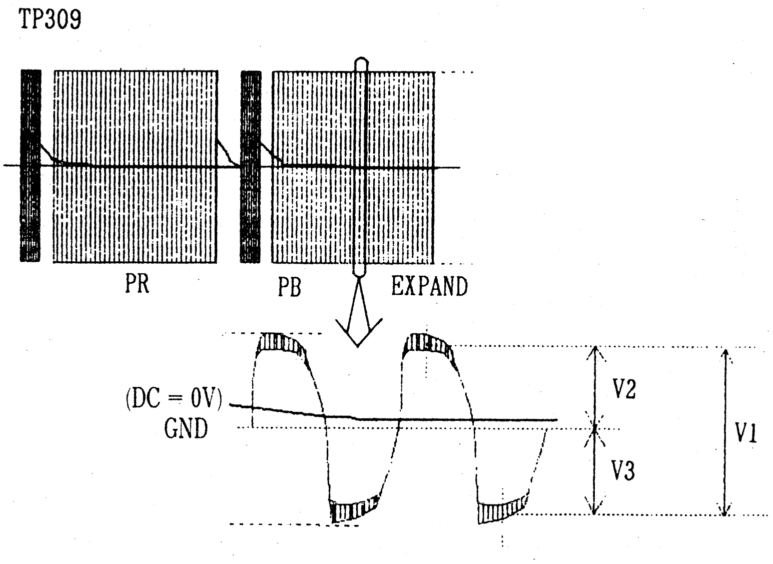

⊘ VR721 : V1 = 400mV ± 5mVp-p
⊘ VR720 : V2 = V3

7-38. Y PLAYBACK GROUP DELAY EQ ADJUSTMENT

(W3 MOD & DEMOD)

TEST POINT	MODE	TAPE USED	M.EQ.	INPUT SIGNAL	ADJUSTMENT
TP309	PLAY	ALIGNMENT SWEEP	OSCILLOSCOPE	---------	VL302

Step 1. 1. Open the jumper TJ302.	TJ302 → OPEN
Step 2. 1. Adjust VL302 so that trap frequency (A) is 4.5 ± 0.1MHz.	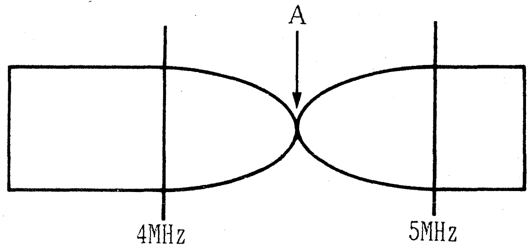 A = 4.5 ± 0.1 MHz
Step 3. 1. After this adjustment short the jumper TJ302.	TJ302 → SHORT

7-39. Y PLAYBACK FREQUENCY RESPONSE ADJUSTMENT (COARSE) (FOR AU-62H/65H and AU-62/65)

TEST POINT	MODE	TAPE USED	M.EQ.	INPUT SIGNAL	ADJUSTMENT
TP309 F29·AB EDGE CONNECTOR (Trigger)	PLAY	ALIGNMENT TAPE SWEEP	OSCILLOSCOPE	-------	VR315 R/P 1 (CH1) VR316 R/P 2 (CH2)

1. SCOPE CH1 : TP309 SCOPE CH2 : F29·AB EDGE CONNECTOR (Trigger) 2. SCOPE SETTING : Trigger Slope (+) 3. Adjust VR315 so that the Y R/P CH1 frequency response is 95% ± 10% at 5.0MHz portion. 4. SCOPE SETTING : Trigger Slope (-) 5. Adjust VR316 so that the Y R/P CH2 frequency response is 95% ± 10% at 5.0MHz portion.	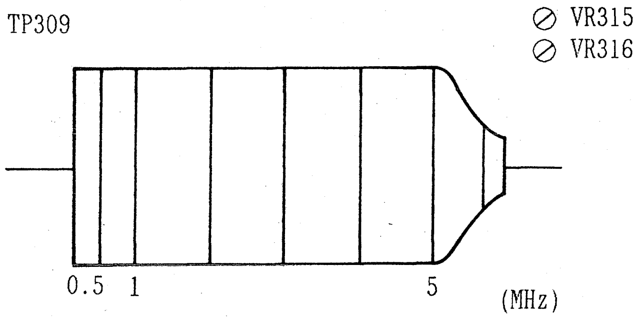 REF : 0.5MHz = 100% SPEC : 5MHz = 95% ± 10%

7-40. Y PLAYBACK FREQUENCY RESPONSE ADJUSTMENT (COARSE) (FOR AU-63H / AU-63)

(W3 MOD & DEMOD)

TEST POINT	MODE	TAPE USED	M.EQ.	INPUT SIGNAL	ADJUSTMENT
TP309 F28·AB EDGE CONNECTOR (Trigger)	PLAY	ALIGNMENT TAPE SWEEP	OSCILLOSCOPE	-------	VR313 AT 1 (CH1) VR314 AT 2 (CH2)

1. SCOPE CH1 : TP309
   SCOPE CH2 : F28·AB EDGE CONNECTOR (Trigger)
2. SCOPE SETTING : Trigger Slope (+)
3. Adjust VR313 so that the Y AT CH1 frequency response is 95% ± 10% at 5.0MHz portion.
4. SCOPE SETTING : Trigger Slope (-)
5. Adjust VR314 so that the Y AT CH2 frequency response is 95% ± 10% at 5.0MHz portion.

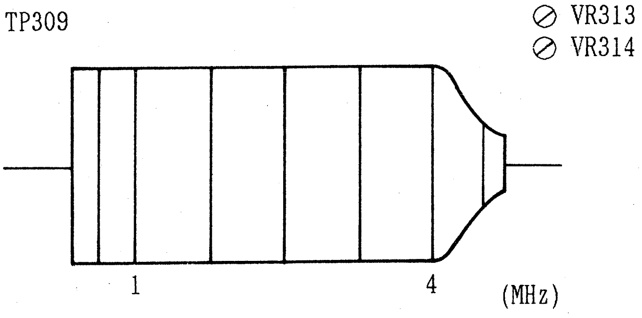

REF : 0.5MHz = 100%
SPEC : 5MHz = 95% ± 10%

7-41. C PLAYBACK FREQUENCY RESPONSE ADJUSTMENT (COARSE) (FOR AU-62H/AU-65H and AU-62/65)

(W3 MOD & DEMOD)

TEST POINT	MODE	TAPE USED	M.EQ.	INPUT SIGNAL	ADJUSTMENT
TP706 F33·AB EDGE CONNECTOR (Trigger)	PLAY	ALIGNMENT TAPE SWEEP	OSCILLOSCOPE	-------	VR712 R/P 1 (CH1) VR713 R/P 2 (CH2)

1. SCOPE CH1 : TP706
   SCOPE CH2 : F33·AB EDGE CONNECTOR (Trigger)
2. SCOPE SETTING : Trigger Slope (+)
3. Adjust VR712 so that the C R/P CH1 frequency response is 95% ± 10% at 1.5MHz portion.
4. SCOPE SETTING : Trigger Slope (-)
5. Adjust VR713 so that the C R/P CH2 frequency response is 95% ± 10% at 1.5MHz portion.

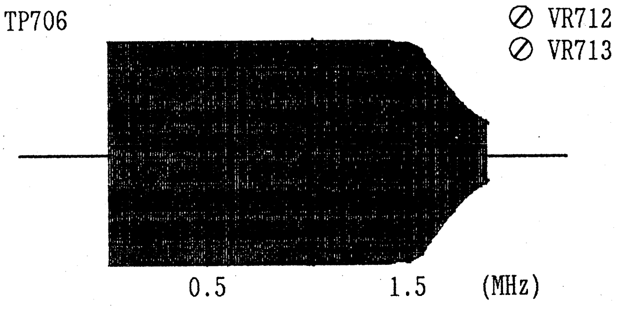

REF : 0.25MHz = 100%
SPEC : 1.5MHz = 95% ± 10%

7-42. C PLAYBACK FREQUENCY RESPONSE ADJUSTMENT (COARSE)(FOR AU-63H / AU-63)

(W3 MOD & DEMOD)

TEST POINT	MODE	TAPE USED	M.EQ.	INPUT SIGNAL	ADJUSTMENT
TP706 F32·AB EDGE CONNECTOR (Trigger)	PLAY	ALIGNMENT TAPE SWEEP	OSCILLOSCOPE	-------	VR710 AT 1 (CH1) VR711 AT 2 (CH2)

1. SCOPE CH1 : TP706
   SCOPE CH2 : F32·AB EDGE CONNECTOR (Trigger)
2. SCOPE SETTING : Trigger Slope (+)
3. Adjust VR710 so that the C AT CH1 frequency response is 95% ± 10% at 1.5MHz portion.
4. SCOPE SETTING : Trigger Slope (-)
5. Adjust VR711 so that the C AT CH2 frequency response is 95% ± 10% at 1.5MHz portion.

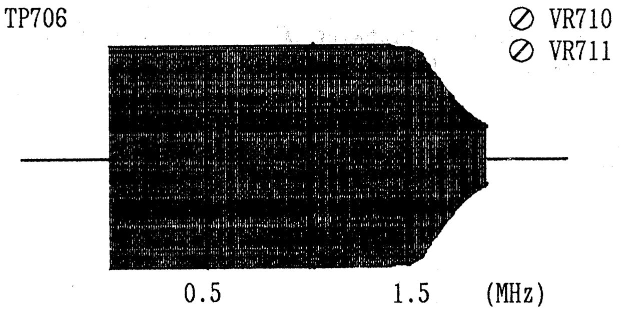

REF : 0.25MHz = 100%
SPEC : 1.5MHz = 95% ± 10%

7-43. Y DEMOD OUTPUT DC LEVEL ADJUSTMENT

(W3 MOD & DEMOD)

TEST POINT	MODE	TAPE USED	M.EQ.	INPUT SIGNAL	ADJUSTMENT
TP311	PLAY	ALIGNMENT COLOUR BAR	OSCILLOSCOPE	-------	VR325 (OUT DC)

1. Adjust VR325 so that the pedestal level is DC 0 ± 0.1V.

7-44. C DEMOD OUTPUT DC LEVEL ADJUSTMENT (W3 MOD & DEMOD)

TEST POINT	MODE	TAPE USED	M.EQ.	INPUT SIGNAL	ADJUSTMENT
TP708	PLAY	ALIGNMENT COLOUR BAR	OSCILLOSCOPE	-------	VR722 (OUT DC)

1. Adjust VR722 so that blanking DC level is DC 0 ± 0.1V.

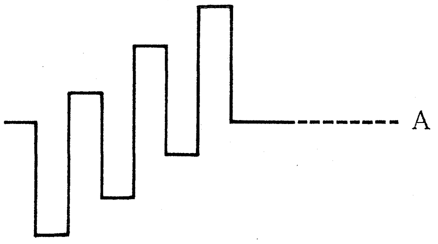

A = 0 ± 0.1V (DC)

8. TBC & SYNC GEN. (W1) BOARD (1/2)

TBC & SYNC GEN. SECTION (1/2) (W1) FLOWCHART FOR ALL MODELS

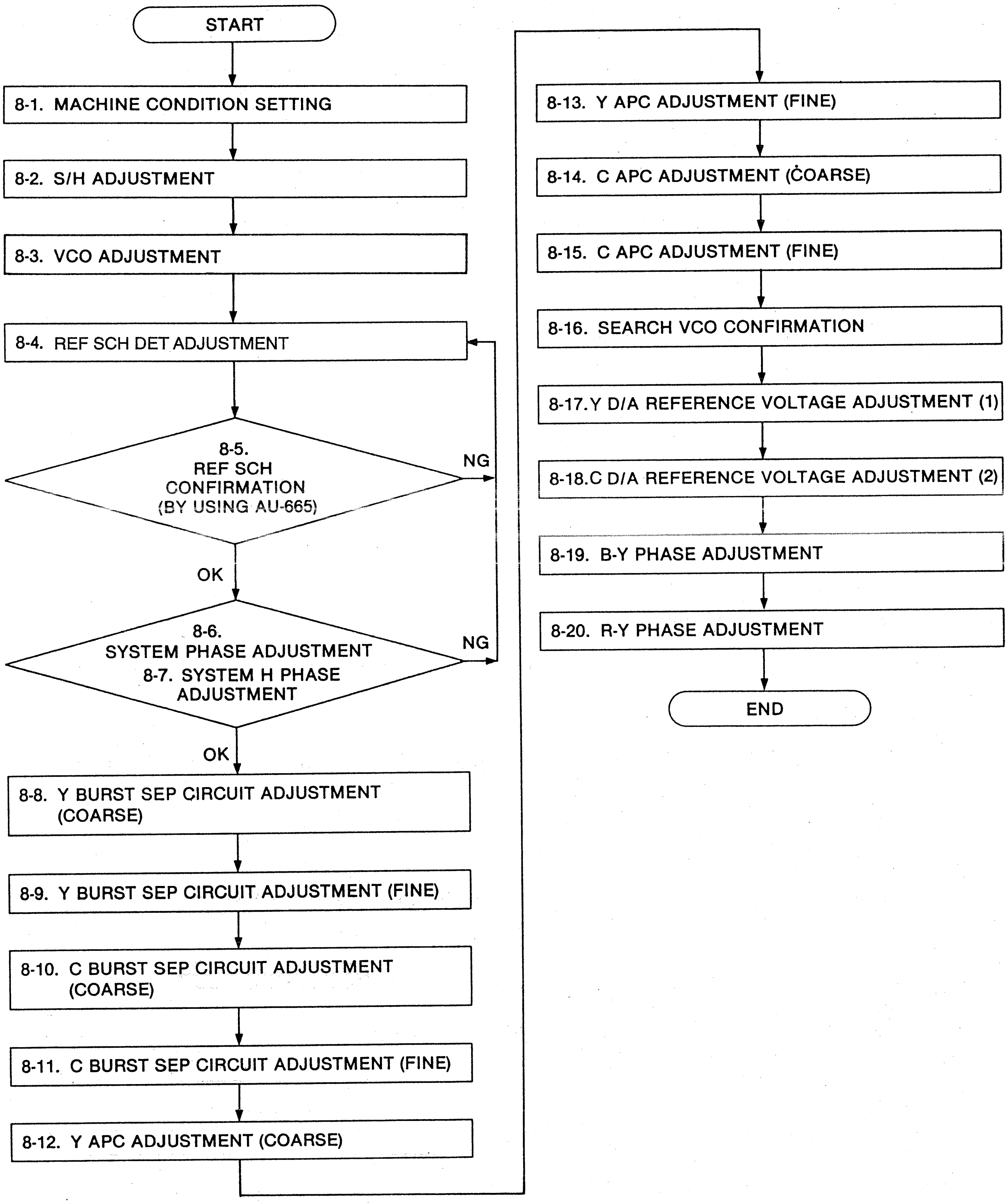

START
8-1. MACHINE CONDITION SETTING
8-2. S/H ADJUSTMENT
8-3. VCO ADJUSTMENT
8-4. REF SCH DET ADJUSTMENT
8-5. REF SCH CONFIRMATION (BY USING AU-665)
NG
OK
8-6. SYSTEM PHASE ADJUSTMENT 8-7. SYSTEM H PHASE ADJUSTMENT
NG
OK
8-8. Y BURST SEP CIRCUIT ADJUSTMENT (COARSE)
8-9. Y BURST SEP CIRCUIT ADJUSTMENT (FINE)
8-10. C BURST SEP CIRCUIT ADJUSTMENT (COARSE)
8-11. C BURST SEP CIRCUIT ADJUSTMENT (FINE)
8-12. Y APC ADJUSTMENT (COARSE)
8-13. Y APC ADJUSTMENT (FINE)
8-14. C APC ADJUSTMENT (COARSE)
8-15. C APC ADJUSTMENT (FINE)
8-16. SEARCH VCO CONFIRMATION
8-17. Y D/A REFERENCE VOLTAGE ADJUSTMENT (1)
8-18. C D/A REFERENCE VOLTAGE ADJUSTMENT (2)
8-19. B-Y PHASE ADJUSTMENT
8-20. R-Y PHASE ADJUSTMENT
END

8. TBC & SYNC GEN. (W1) BOARD (1/2)
8-1. MACHINE CONDITION SETTING

To change the Input SCH Phase, another MII VTR is required Use the SCH Phase Adjustment Fixture as following adjustment section.

*Note:
1. When AU-665 is used for SCH Adjustment, use SYSTEM SC PHASE (COARSE & FINE) VR on the Front Sub Panel (Behind the Front Panel).

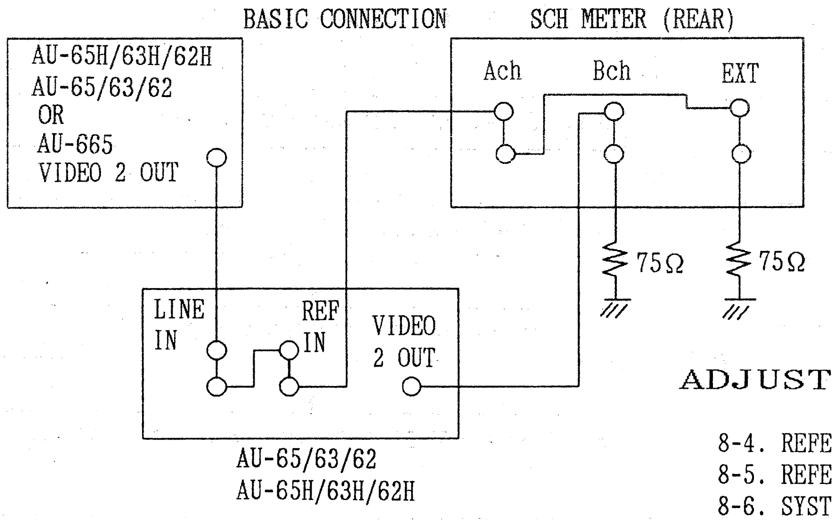
BASIC CONNECTION
SCH METER (REAR)
AU-65H/63H/62H
AU-65/63/62
OR
AU-665
VIDEO 2 OUT
Ach
Bch
EXT
75Ω
75Ω
LINE IN
REF IN
VIDEO 2 OUT
AU-65/63/62
AU-65H/63H/62H

ADJUSTMENT SECTION

8-4. REFERENCE SCH ADJUSTMENT
8-5. REFERENCE SCH & REFERENCE CF CONFIRMATION
8-6. SYSTEM PHASE ADJUSTMENT
8-7. SYSTEM H PHASE ADJUSTMENT

8-2. S/H ADJUSTMENT

(W1 TBC & SYNC GEN)

<table>
<tr><th>TEST POINT</th><th>MODE</th><th>TAPE USED</th><th>M.EQ.</th><th>INPUT SIGNAL</th><th>ADJUSTMENT</th></tr>
<tr><td>TP203
TP204</td><td>E-E
(EJECT)</td><td>-----</td><td>OSCILLOSCOPE</td><td>COMPOSITE
REF. VIDEO
SIGNAL TO
REF. VIDEO IN</td><td>VR201 (S/H PHASE)</td></tr>
<tr><td colspan="3">Step 1.
MACHINE CONDITION</td><td colspan="3">Refer to SET UP Conditions at the beginning of this SECTION (TBC & SYNC GEN W1).</td></tr>
<tr><td colspan="3">Step 2.
1. SCOPE CH1 : TP203
SCOPE CH2 : TP204 (Trigger)
2. Adjust VR201 so that the centre point of S/H pulse at TP204 is in the centre point of the burst signal at TP203.</td><td colspan="3">⊘ VR201
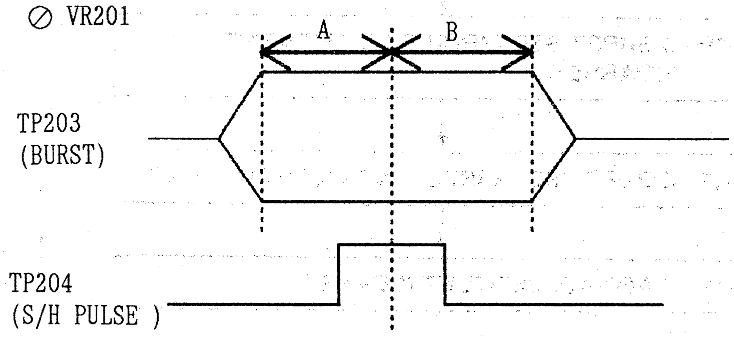

A
B
TP203
(BURST)
TP204
(S/H PULSE)

A = B ± 10%</td></tr>
</table>

8-3. VCO ADJUSTMENT 17.7MHz

(W1 TBC & SYNC GEN)

TEST POINT	MODE	TAPE USED	M.EQ.	INPUT SIGNAL	ADJUSTMENT
TP206	E-E (EJECT)	-------	OSCILLOSCOPE	COMPOSITE REF. VIDEO SIGNAL TO REF. VIDEO IN	C234

1. Connect the SCOPE to TP206.
2. Adjust C234 so that D.C. voltage at TP206 is 0V.
3. Confirm C234 so that D.C. voltage at TP206 is 0V with no reference VIDEO signal.

8-4. REF SCH DET ADJUSTMENT

(W1 TBC & SYNC GEN)

TEST POINT	MODE	TAPE USED	M.EQ.	INPUT SIGNAL	ADJUSTMENT
FIELD REF AT SIGNAL GEN TP207 TP208 TP214	E-E (EJECT)	-------	OSCILLOSCOPE	REF VIDEO	VR202 (SCH DET)

Step 1. (CORASE)

1. Preset VR202 (SCH DET) to the 10 o'clock position.

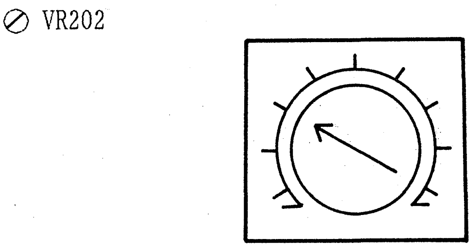

Step 2.

1. Confirm input reference signal to REF VIDEO input with SCH 0°.
2. Connect the scope to TP207 and TP208 with V rate.
3. Adjust VR202 so that the pulse at TP208 is centre of the pulse at TP207 as shwon in figure.

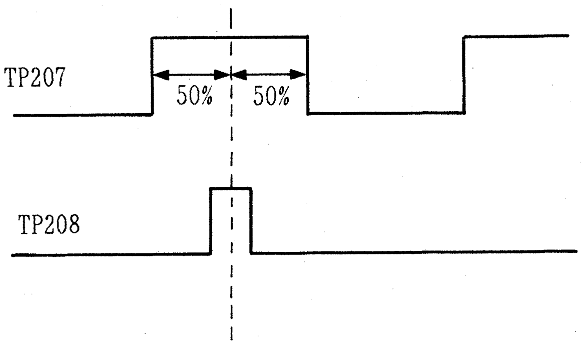

8-5. REF SCH CONFIRMATION (BY USING AU-665)

(W1 TBC & SYNC GEN)

TEST POINT	MODE	TAPE USED	M.EQ.	INPUT SIGNAL	ADJUSTMENT
REF SCH LAMP (on Front Panel)	EJECT (E-E)	-------	OSCILLOSCOPE	REF VIDEO	------------

Note: This confirmation in case of having AU-665 only. Step 1. MACHINE CONDITION	Refer to Set Up Conditions at the beginning of this SECTION (TBC & SYNC GEN W1).
Step 2. 1. Change the REF SCH phase from -45° TO +45° by signal generator (TEK1411). 2. Confirm that the REF SCH LAMP on the Front Panel turns "ON".	REF. SCH ☐ ON SCH PHASE = ±45°
Step 3. 1. Change the REF SCH phase less than -65° and more than +65° by signal generator (TEK1411). 2. Confirm that the REF SCH LAMP on the Front Panel turns "OFF".	REF. SCH ☐ OFF SCH PHASE = Less than -65° = more than +65°
Step 4. 1. If it is not satisfied above condition, readjust, the REF. SCH adjustment 8-4-P and 8-5-P. (This adjustment.)	

8-6. SYSTEM PHASE ADJUSTMENT

(W1 TBC & SYNC GEN)

TEST POINT	MODE	TAPE USED	M.EQ.	INPUT SIGNAL	ADJUSTMENT
REF VIDEO VIDEO 2	E-E (EJECT) FOR AU-65H/65 PLAY (FOR AU-63H/ 62H/63/62)	ALIGNMENT TAPE COLOUR BAR (FOR AU-63H/ 62H/63/62)	SCH METER	REF. VIDEO (SCH 0°)	VR206 (CK1 PHASE) VR204 (SCH PHASE)

Step 1.
MACHINE CONDITION

Refer to the Set Up Conditions at the beginning of this SECTION (TBC & SYNC GEN W1).

Step 2.

1. Set the REF. SCH Phase to 0° with the another MII VTR.
2. SYS SC FINE (Pull Out Drawer) : DETENT POSITION
3. SCH METER'S trigger is EXT.
4. Change the SCH INPUT SELECT (A and B) alternatly.
5. Adjust VR204 and VR206 so that the A channel REF VIDEO H phase and the B channel VIDEO 2 OUT H phase are the same (0° ± 2°).

CONNECTION

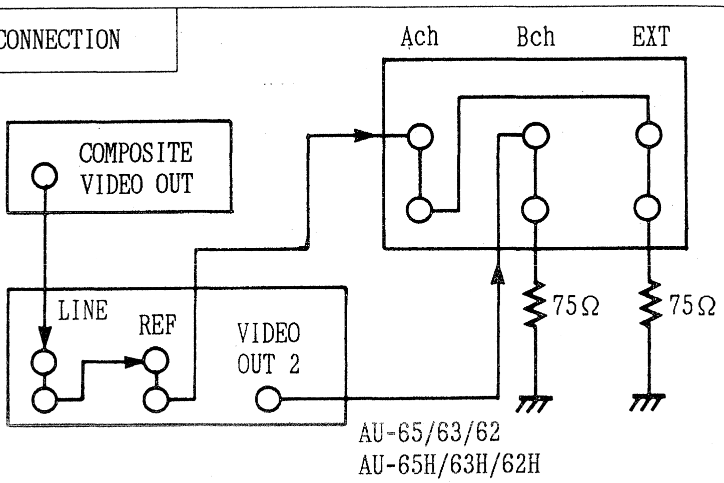
Ach
Bch
EXT
COMPOSITE VIDEO OUT
LINE
REF
VIDEO OUT 2
75Ω
75Ω
AU-65/63/62
AU-65H/63H/62H

SPEC

SCH METER
(Trigger : EXT)

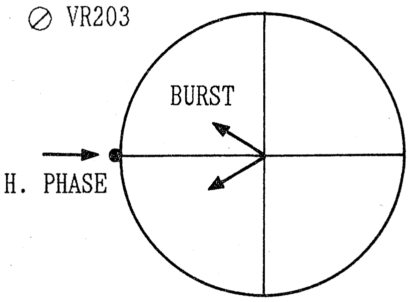
⊘ VR203
BURST
H. PHASE

SPECIFICATION = 0° ± 2°

8-7. SYSTEM H PHASE ADJUSTMENT

(W1 TBC & SYNC GEN)

TEST POINT	MODE	TAPE USED	M.EQ.	INPUT SIGNAL	ADJUSTMENT
VIDEO 2 REF VIDEO	E-E (EJECT) FOR AU-65H/65 PLAY (FOR AU-63H/62H/63/62)	ALIGNMENT TAPE COLOR BAR (FOR AU-63H/62H/63/62)	SCH METER (WFM Mode)	REF. VIDEO (SCH 0°)	VR205 (H PHASE)

1. CONNECTION

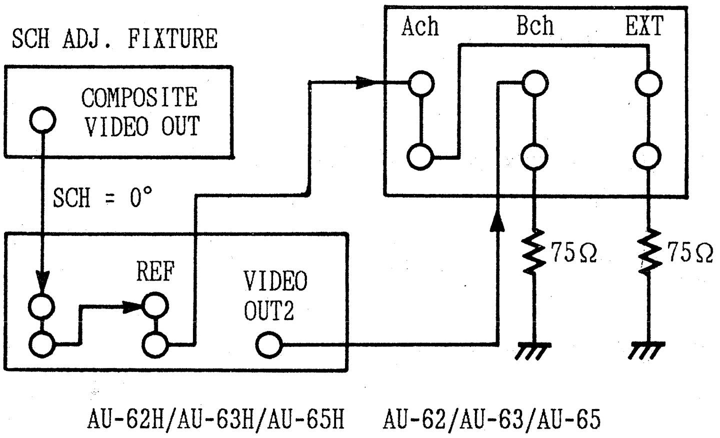
SCH ADJ. FIXTURE
COMPOSITE VIDEO OUT
SCH = 0°
REF
VIDEO OUT2
Ach
Bch
EXT
75Ω
75Ω
AU-62H/AU-63H/AU-65H
AU-62/AU-63/AU-65

2. MACHINE CONDITION
Refer to the Machine Set Up Condition for TBC & SYNC GEN (W1).

3. SCH METER : WFM Mode
4. Change the channel A and B alternately.
5. Adjust VR205 so that the B channel's falling edge of Sync becomes the same as the A channel falling edge of Sync as shown.

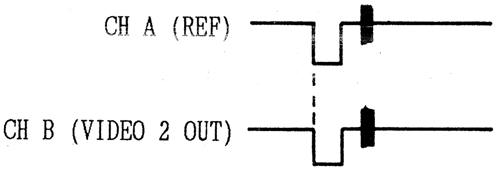
CH A (REF)
CH B (VIDEO 2 OUT)

6. CONFIRMATION

(1) REF VIDEO and VIDEO 2, H phase converge on same point when the power is turned ON and OFF.

(2) When the SYSTEM SC COARSE (on Front Pull Out Drawer) is changed to ±90°, SYSTEM SC phase moves ± 57 n sec.

7. If it is not within specification, readjust VR205.

8-8. Y BURST SEP CIRCUIT ADJUSTMENT (COARSE)

(W1 TBC & SYNC GEN)

TEST POINT	MODE	TAPE USED	M.EQ.	INPUT SIGNAL	ADJUSTMENT
F15B (CONNECTOR) TP412	PLAY	ALIGNMENT TAPE COLOUR BAR	OSCILLOSCOPE	-------	VR401 (Y SYNC PHASE)

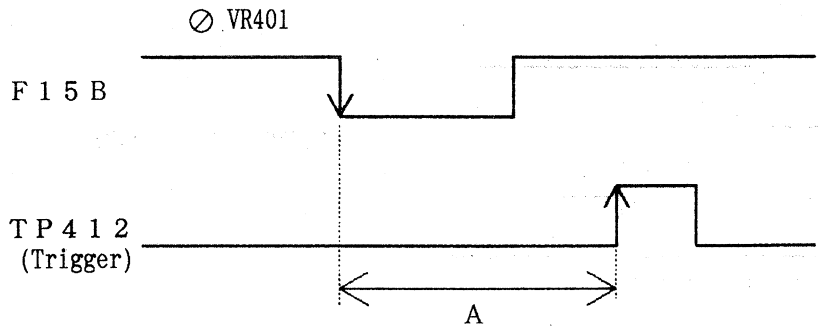

⊘ VR401
F 1 5 B
T P 4 1 2
(Trigger)
A

A = 7.0 μsec.
(Trigger : TP412)

8-9. Y BURST SEP CIRCUIT ADJUSTMENT (FINE)

(W1 TBC & SYNC GEN)

TEST POINT	MODE	TAPE USED	M.EQ.	INPUT SIGNAL	ADJUSTMENT
TP412 TP413	PLAY	ALIGNMENT TAPE COLOUR BAR	OSCILLOSCOPE	----------	VR401 (Y SYNC PHASE)

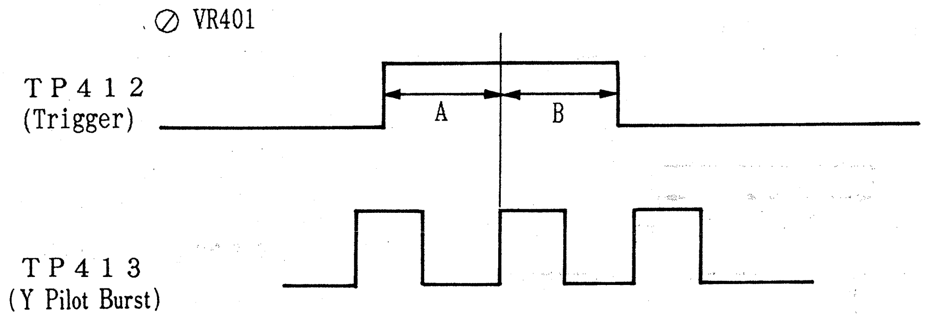

⊘ VR401
T P 4 1 2
(Trigger)
A
B
T P 4 1 3
(Y Pilot Burst)

A = B ± 10%

(Trigger : TP412)

8-10. C BURST SEP CIRCUIT ADJUSTMENT (COARSE)

(W1 TBC & SYNC GEN)

TEST POINT	MODE	TAPE USED	M.EQ.	INPUT SIGNAL	ADJUSTMENT
F16B (CONNECTOR) TP416	PLAY	ALIGNMENT TAPE COLOUR BAR	OSCILLOSCOPE	----------	VR409 (C SYNC PHASE)

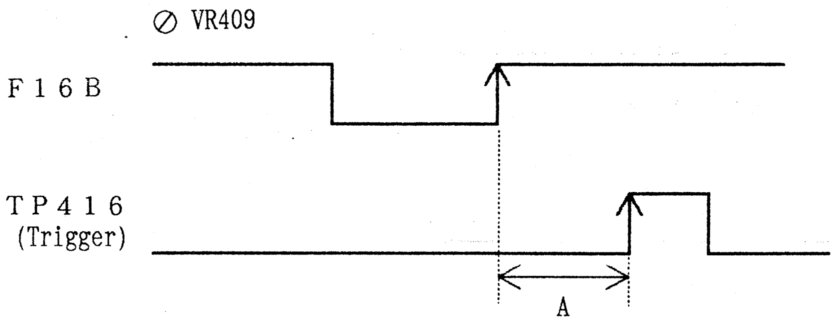
⊘ VR409
F16B
TP416
(Trigger)
A

A = 1.5 μsec.
(Trigger : TP416)

8-11. C BURST SEP CIRCUIT ADJUSTMENT (FINE)

(W1 TBC & SYNC GEN)

TEST POINT	MODE	TAPE USED	M.EQ.	INPUT SIGNAL	ADJUSTMENT
TP416 TP417	PLAY	ALIGNMENT TAPE COLOUR BAR	OSCILLOSCOPE	----------	VR409 (C SYNC PHASE)

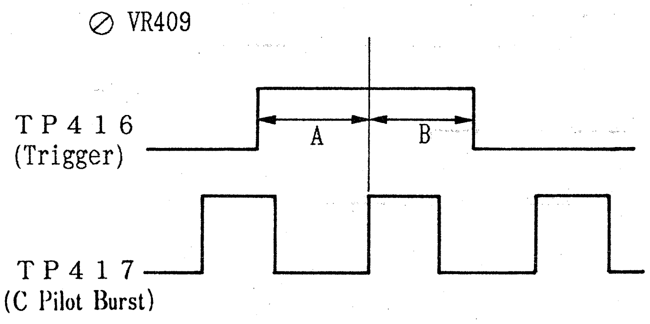
⊘ VR409
TP416
(Trigger)
A
B
TP417
(C Pilot Burst)

A = B ± 10%

(Trigger : TP416)

8-12. Y APC ADJUSTMENT (COARSE)

(W1 TBC & SYNC GEN)

TEST POINT	MODE	TAPE USED	M.EQ.	INPUT SIGNAL	ADJUSTMENT
TP427	PLAY	ALIGNMENT TAPE COLOUR BAR	OSCILLOSCOPE	----------	VR403 (Y APC)

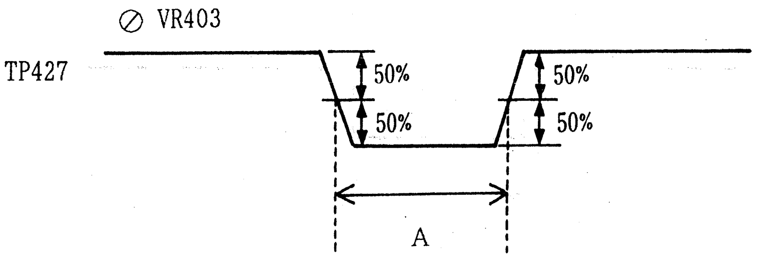

A = 150 n s ± 5 n s

8-13. Y APC ADJUSTMENT (FINE)

(W1 TBC & SYNC GEN)

TEST POINT	MODE	TAPE USED	M.EQ.	INPUT SIGNAL	ADJUSTMENT
TP425	PLAY	ALIGNMENT TAPE COLOUR BAR	OSCILLOSCOPE	----------	VR403 (Y APC)

1. SCOPE SETTING : GND
2. Set the scan line to the centre position on the scope.
3. SCOPE SETTING : AC MODE
4. Adjust VR403 so that the A and B are balanced as shown.

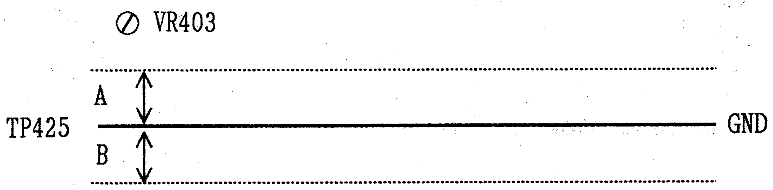

A = B ± 10% (V RATE)

8-14. C APC ADJUSTMENT (COARSE)

(W1 TBC & SYNC GEN)

TEST POINT	MODE	TAPE USED	M.EQ.	INPUT SIGNAL	ADJUSTMENT
TP426	PLAY	ALIGNMENT TAPE COLOUR BAR	OSCILLOSCOPE	----------	VR408 (C APC)

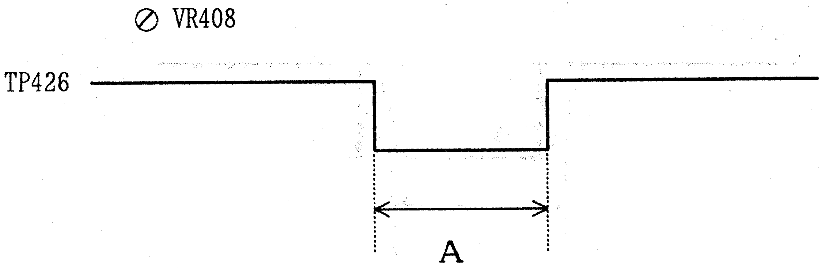

A = 150 n s ± 5 n s

8-15. C APC ADJUSTMENT (FINE)

(W1 TBC & SYNC GEN)

TEST POINT	MODE	TAPE USED	M.EQ.	INPUT SIGNAL	ADJUSTMENT
TP424	PLAY	ALIGNMENT TAPE COLOUR BAR	OSCILLOSCOPE	----------	VR408 (C APC)

1. SCOPE SETTING : GND
2. Set the scan line to the centre position on the scope.
3. SCOPE SETTING : AC MODE
4. Adjust VR408 so that the A and B are balanced as shown in figure.

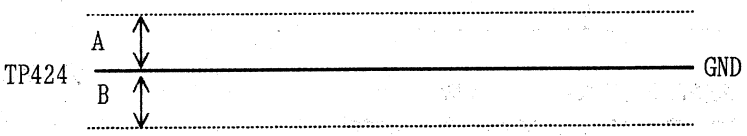

A = B ± 10% (V LATE)

8-16. SEARCH VCO CONFIRMATION

(W1 TBC & SYNC GEN)

TEST POINT	MODE	TAPE USED	M.EQ.	INPUT SIGNAL	ADJUSTMENT
TP422 F15B (W1 connector)	SHTL & PLAY	ALIGNMENT TAPE COLOUR BAR	OSCILLOSCOPE	----------	VR402 (SEARCH VCO)

CONFIRMATION

1. SHTL ± ×4 SPEED = WITH COLOUR PLAYBACK.
2. SHTL ± 32 SPEED = BLACK & WHITE PICTURE (WITHOUT HORIZONTAL EXTENSION AND COMPRESSION)

If it is not, readjust VR402 so that the pulse width at TP422 is as shown in Figure at playback.

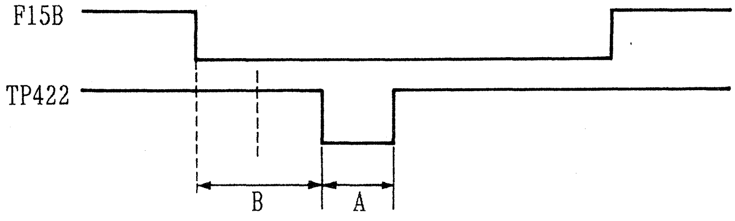

A × 2 = B ± 10%

8-17. Y D/A REFERENCE VOLTAGE ADJUSTMENT (1)

(W1 TBC & SYNC GEN)

TEST POINT	MODE	TAPE USED	M.EQ.	INPUT SIGNAL	ADJUSTMENT
TP1	PLAY	ALIGNMENT TAPE COLOUR BAR	Digital Voltage Meter	-------	VR1 (AJ. REF. 1)

Step 1. MACHINE CONDITION	VIDEO LEVEL VR = CENTRE (on Pull Out Drawer)
Step 2. 1. Connect D.V.M. to TP1 and adjust VR1.	⊘ VR1 SPECIFICATION = 4.1 ± 0.01V (DC)

8-18. C D/A REFERENCE VOLTAGE ADJUSTMENT (2)

(W1 TBC & SYNC GEN)

TEST POINT	MODE	TAPE USED	M.EQ.	INPUT SIGNAL	ADJUSTMENT
TP2	PLAY	ALIGNMENT TAPE COLOUR BAR	Digital Voltage Meter	-------	VR2 (AJ. REF. 2)

Step 1. MACHINE CONDITION	Set the switches on the Pull Out Drawer as follows. 1. VIDEO LEVEL VR : CENTRE 2. CHROMA LEVEL : CENTRE 3. PR LEVEL : CENTRE 4. PB LEVEL : CENTRE
Step 2. 1. Connect D.V.M. to TP2 and adjust VR2.	⊘ VR2 SPECIFICATION = 4.1 ± 0.01V (DC)

8-19. B-Y PHASE ADJUSTMENT

(W1 TBC & SYNC GEN)

Step 1.

1. Turn VR405 centre position.

Note:
VR405 is for user, so confirm the user setting.

VR406

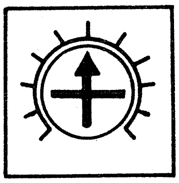

8-20. R-Y PHASE ADJUSTMENT

(W1 TBC & SYNC GEN)

Step 1.

1. Turn VR406 centre position.

Note:
VR406 is for user, so confirm the user setting.

VR406

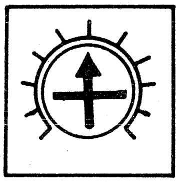

9. ENCODER (W2) BOARD (1/2)

ENCODER SECTION (1/2) (W2) FLOWCHART FOR ALL MODELS

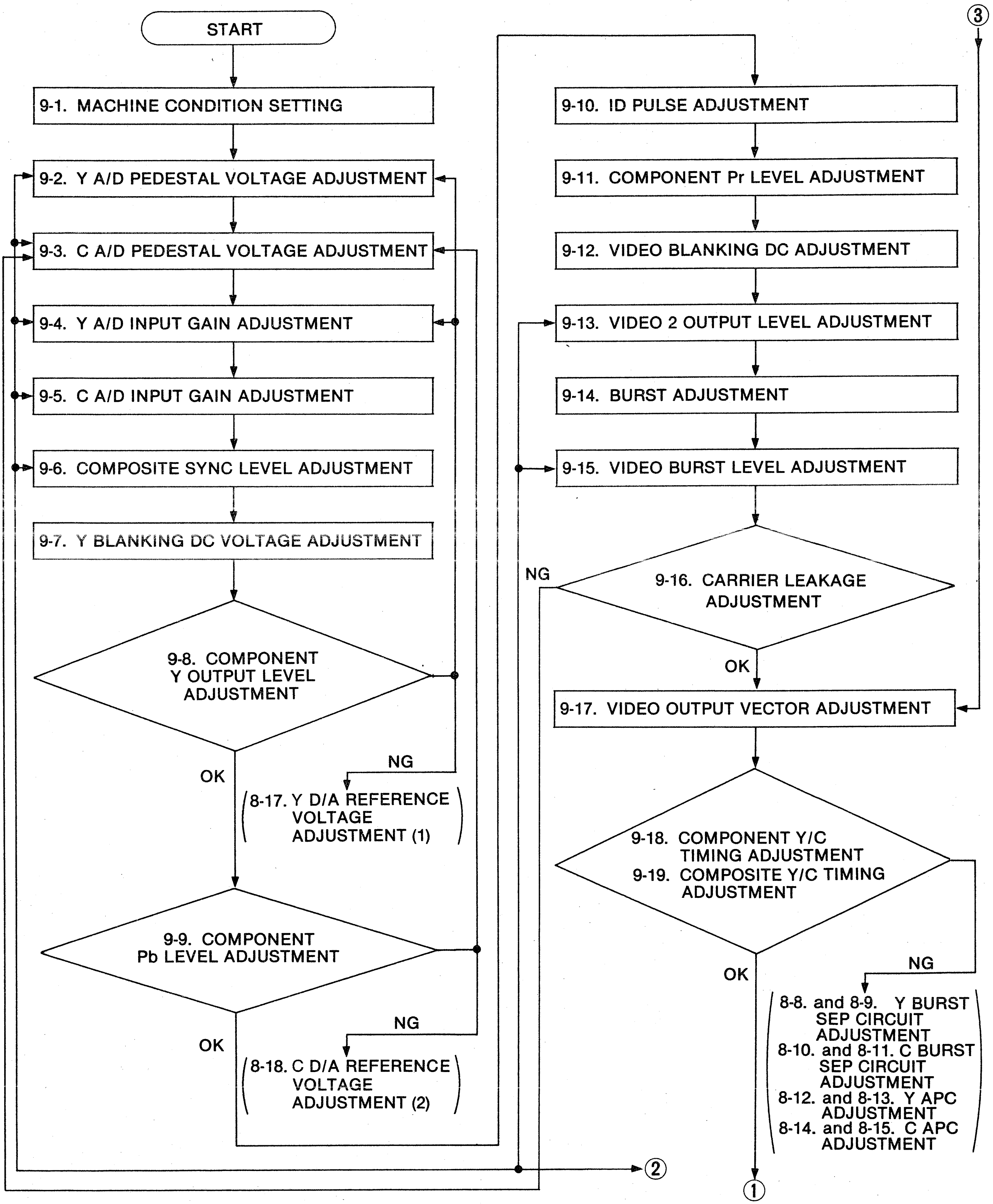

START
9-1. MACHINE CONDITION SETTING
9-2. Y A/D PEDESTAL VOLTAGE ADJUSTMENT
9-3. C A/D PEDESTAL VOLTAGE ADJUSTMENT
9-4. Y A/D INPUT GAIN ADJUSTMENT
9-5. C A/D INPUT GAIN ADJUSTMENT
9-6. COMPOSITE SYNC LEVEL ADJUSTMENT
9-7. Y BLANKING DC VOLTAGE ADJUSTMENT
9-8. COMPONENT Y OUTPUT LEVEL ADJUSTMENT
OK
NG
8-17. Y D/A REFERENCE VOLTAGE ADJUSTMENT (1)
9-9. COMPONENT Pb LEVEL ADJUSTMENT
OK
NG
8-18. C D/A REFERENCE VOLTAGE ADJUSTMENT (2)
②
③
9-10. ID PULSE ADJUSTMENT
9-11. COMPONENT Pr LEVEL ADJUSTMENT
9-12. VIDEO BLANKING DC ADJUSTMENT
9-13. VIDEO 2 OUTPUT LEVEL ADJUSTMENT
9-14. BURST ADJUSTMENT
9-15. VIDEO BURST LEVEL ADJUSTMENT
NG
9-16. CARRIER LEAKAGE ADJUSTMENT
OK
9-17. VIDEO OUTPUT VECTOR ADJUSTMENT
9-18. COMPONENT Y/C TIMING ADJUSTMENT
9-19. COMPOSITE Y/C TIMING ADJUSTMENT
OK
NG
8-8. and 8-9. Y BURST SEP CIRCUIT ADJUSTMENT
8-10. and 8-11. C BURST SEP CIRCUIT ADJUSTMENT
8-12. and 8-13. Y APC ADJUSTMENT
8-14. and 8-15. C APC ADJUSTMENT
①

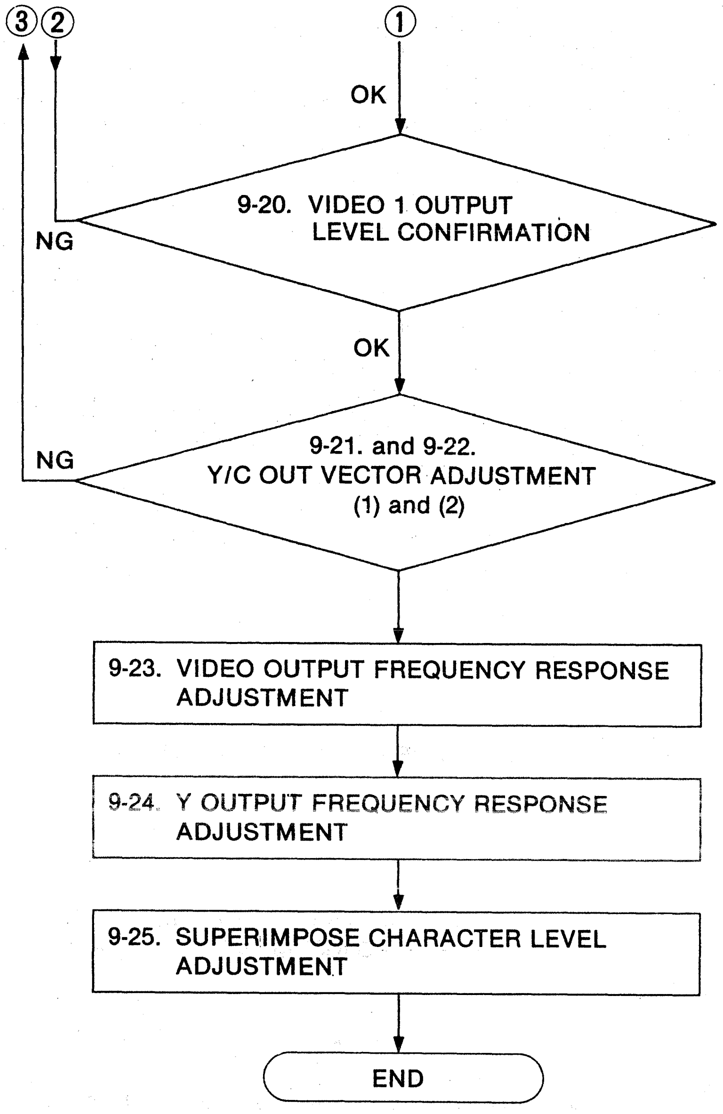
③
②
①
OK
NG
9-20. VIDEO 1 OUTPUT LEVEL CONFIRMATION
OK
NG
9-21. and 9-22. Y/C OUT VECTOR ADJUSTMENT (1) and (2)
9-23. VIDEO OUTPUT FREQUENCY RESPONSE ADJUSTMENT
9-24. Y OUTPUT FREQUENCY RESPONSE ADJUSTMENT
9-25. SUPERIMPOSE CHARACTER LEVEL ADJUSTMENT
END

9. ENCODER (W2) BOARD (1/2)

9-1. MACHINE CONDITION SETTING

Use 75Ω terminator with Waveform Monitor or Oscilloscope for level adjustment.

1. CF SELECT SW (on Front Sub Panel) ------------- 8F
2. SYNC SELECT SW (on Front Sub Panel) ----------------------- AUTO
3. COMPONENT Y/Pr/Pb LEVEL VR (on Pull Out Drawer) --- DETENT POSITION
4. VIDEO LEVEL VR ----------------------------------- DETENT POSITION
5. SET UP LEVEL VR ----------------------------------- DETENT POSITION
6. CHROMA LEVEL VR ----------------------------------- DETENT POSITION
7. HUE VR ----------------------------------- DETENT POSITION

9-2. Y A/D PEDESTAL VOLTAGE ADJUSTMENT

(W2 ENCODER)

TEST POINT	MODE	TAPE USED	M.EQ.	INPUT SIGNAL	ADJUSTMENT
TP201	PLAY	ALIGNMENT TAPE 100% COLOUR BAR	OSCILLOSCOPE	----------	VR 2 (Y REF)

1. SCOPE : TP201
2. When VR2 is turned, a step will appear at pedestal.
3. Adjust VR2 so that "A" part is "FLAT".

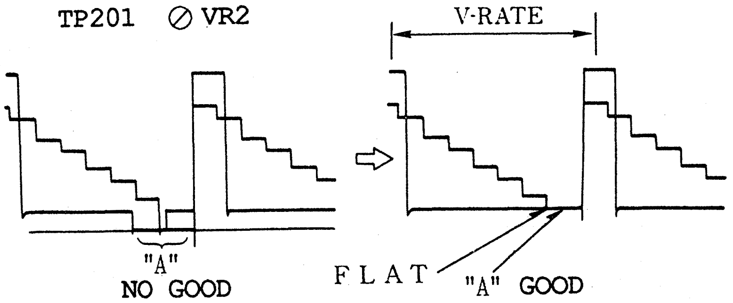

9-3. C A/D PEDESTAL VOLTAGE ADJUSTMENT

(W2 ENCODER)

TEST POINT	MODE	TAPE USED	M.EQ.	INPUT SIGNAL	ADJUSTMENT
COMPONENT Pb OUT	PLAY	ALIGNMENT TAPE 100% COLOUR BAR	OSCILLOSCOPE	---------	VR 4 (C REF)

1. SCOPE : COMPONENT Pb OUT
2. When VR4 is turned, a step will appear at pedestal.
3. Adjust VR4 so that the step at pedestal is "FLAT".

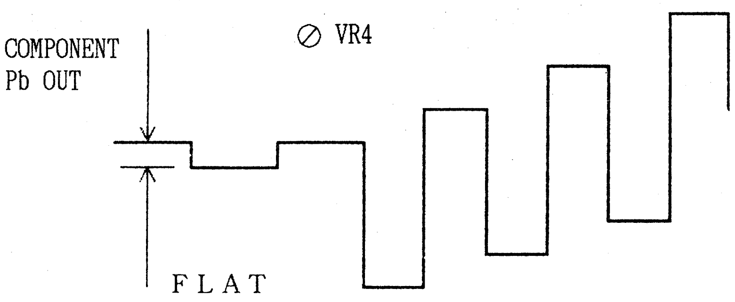

9-4. Y A/D INPUT GAIN ADJUSTMENT

(W2 ENCODER)

TEST POINT	MODE	TAPE USED	M.EQ.	INPUT SIGNAL	ADJUSTMENT
COMPONENT Y OUT	E-E (For AU-65H /65) PLAY (For AU-63H/ 62H/63/62)	Pre-recorded Level Reference Colour Bar (For AU-63H/ 62H/63/62)	WAVEFORM MONITOR OR OSCILLOSCOPE	COMPONENT COLOUR BAR LEVEL REFERENCE SIGNAL	VR 1 (Y. G)

Step 1. (For AU-65H/65)

1. SCOPE : COMPONENT Y OUT
2. Adjust VR1 so that the Top portion is clipped as shown in figure.

Step 2. (For AU-63H/62H and 63/62)

1. SCOPE : COMPONENT Y OUT
2. Play back the Pre-recorded Colour Bar Level Reference Signal.
3. Adjust VR1 so that the Top Portion of the Colour Bar Level Reference Signal is clipped as shown in figure.

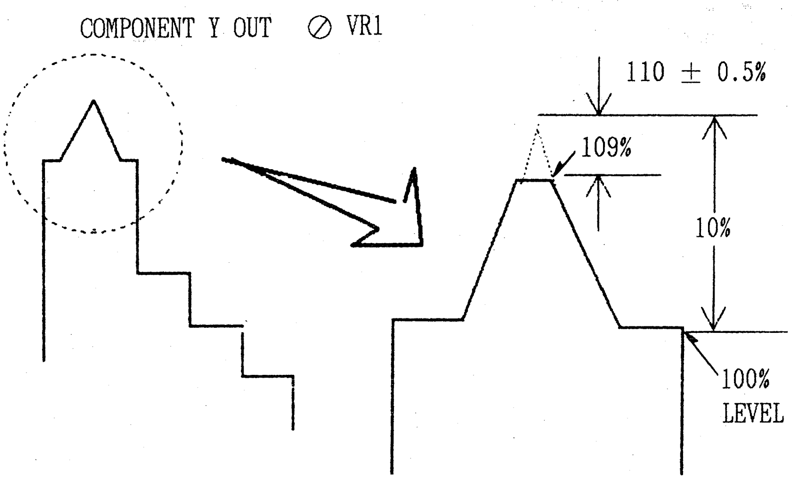

9-5. C A/D INPUT GAIN ADJUSTMENT

(W2 ENCODER)

TEST POINT	MODE	TAPE USED	M.EQ.	INPUT SIGNAL	ADJUSTMENT
TP 4	PLAY	ALIGNMENT COLOUR BAR 100%	OSCILLOSCOPE	---------	VR 3 (C. G)

1. Adjust VR3 so that R-Y level is 1.75 ± 0.02Vp-p.	TP4 ⊘ VR3 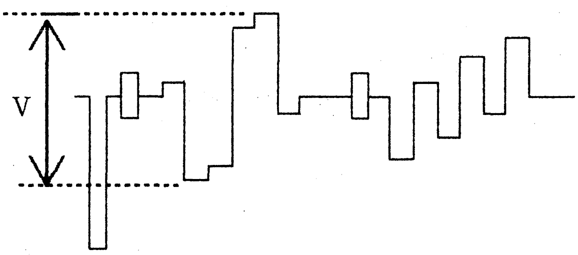 V = 1.75 ± 0.02Vp-p

9-6. COMPOSITE SYNC LEVEL ADJUSTMENT

(W2 ENCODER)

TEST POINT	MODE	TAPE USED	M.EQ.	INPUT SIGNAL	ADJUSTMENT
VIDEO 2 OUT	E-E (EJECT)	-------	OSCILLOSCOPE (with 75Ω terminator)	---------	VR210 (SYNC. G)

1. Adjust VR210 so that H-SYNC level is 0.3 ± 0.006Vp-p.	VIDEO 2 OUT ⊘ VR210 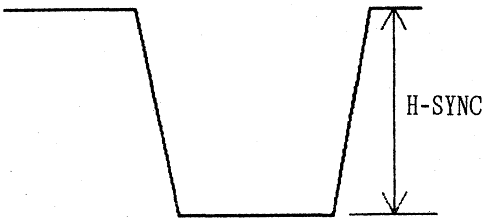 H. SYNC LEVEL = 0.3 ± 0.006Vp-p

9-7. Y BLANKING DC VOLTAGE ADJUSTMENT

(W2 ENCODER)

TEST POINT	MODE	TAPE USED	M.EQ.	INPUT SIGNAL	ADJUSTMENT
COMPONENT Y OUT	E-E (EJECT)	-----	OSCILLOSCOPE	---------	VR202 (Y. BLK DC)

1. Adjust VR202 so that H-BLANKING DC level is 0 ± 20mV at COMPONENT Y OUT.

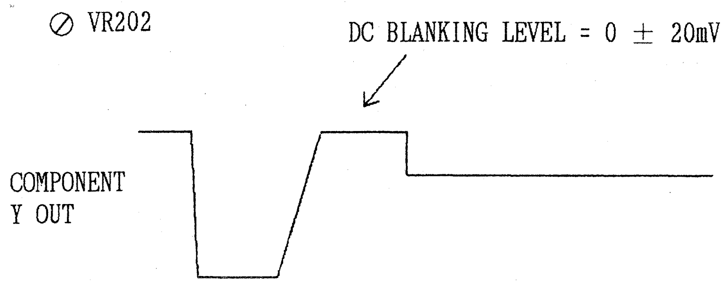
⊘ VR202
DC BLANKING LEVEL = 0 ± 20mV
COMPONENT
Y OUT

9-8. COMPONENT Y OUTPUT LEVEL ADJUSTMENT

(W2 ENCODER)

TEST POINT	MODE	TAPE USED	M.EQ.	INPUT SIGNAL	ADJUSTMENT
COMPONENT Y OUT	PLAY	ALIGNMENT TAPE COLOUR BAR	OSCILLOSCOPE (with 75Ω terminator)	---------	VR200 (Y. G) VR201 (Y. DC)

1. Confirm that the sync level is 0.3 ± 0.005Vp-p.
2. If sync level is incorrect, readjust COMPOSITE SYNC LEVEL ADJ. (9-6)
3. Adjust VR200 so that the Y signal level is 0.7 ± 0.007Vp-p.
4. Adjust VR201 so that Y pedestal DC is 0 ± 5mV.

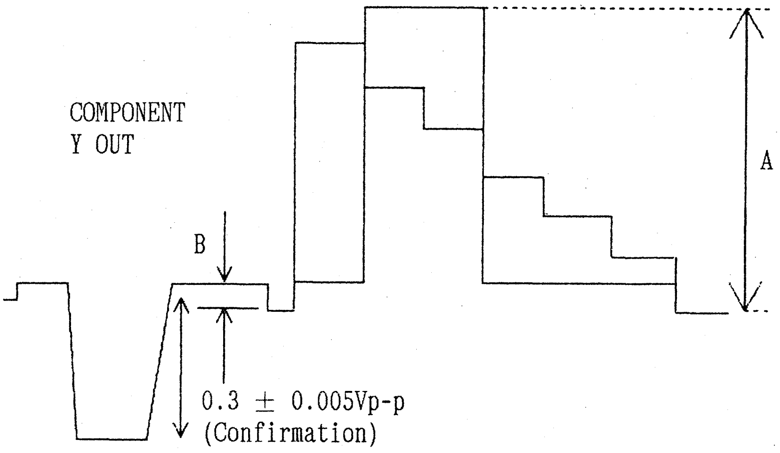
COMPONENT
Y OUT
A
B
0.3 ± 0.005Vp-p
(Confirmation)

⊘ VR200 A = 0.7 ± 0.007Vp-p

⊘ VR201 B = 0 ± 5mV (DC)

9-9. COMPONENT Pb LEVEL ADJUSTMENT

(W2 ENCODER)

TEST POINT	MODE	TAPE USED	M.EQ.	INPUT SIGNAL	ADJUSTMENT
COMPONENT Pb OUT	PLAY	ALIGNMENT TAPE COLOUR BAR 100%	OSCILLOSCOPE (with 75Ω terminator)	---------	VR203 (PB. G) VR204 (PB. DC)

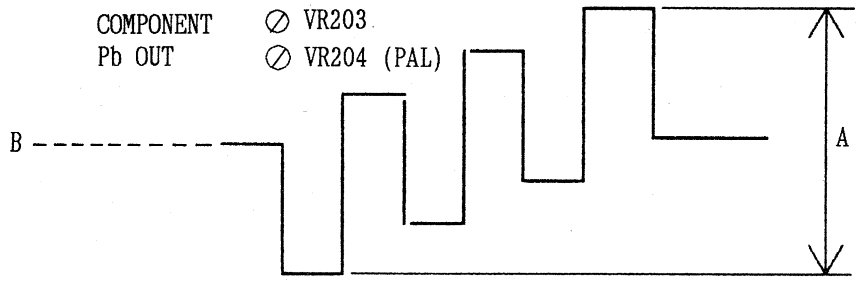

A = 0.7 ± 0.007Vp-p

"B" portion DC voltage = 0 ± 20mV

9-10. ID PULSE ADJUSTMENT

(W2 ENCODER)

TEST POINT	MODE	TAPE USED	M.EQ.	INPUT SIGNAL	ADJUSTMENT
COMPONENT Pb OUT	REC	BLANK TAPE	OSCILLOSCOPE (with 75Ω terminator)	COMPOSITE 100% COLOUR BAR	VR212 (ID BAL)

Step 1.
MACHINE CONDITION

Refer to SET UP Conditions at the beginning of this SECTION (ENCODER - W2).

Step 2.

1. Adjust VR212 so that the ID pulse levels A and B are equal (See fig.)
2. Confirm that the ID pulse level is A = B = 0.3 ~ 0.35V.

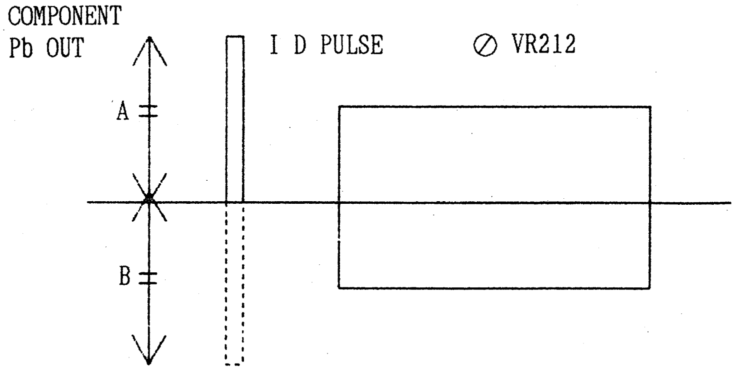

A = B = 0.3 ~ 0.35Vp-p

9-11. COMPONENT Pr LEVEL ADJUSTMENT

(W2 ENCODER)

TEST POINT	MODE	TAPE USED	M.EQ.	INPUT SIGNAL	ADJUSTMENT
COMPONENT Pr OUT	PLAY	ALIGNMENT TAPE COLOUR BAR 100%	OSCILLOSCOPE (with 75Ω terminator)	---------	VR205 (PR. G) VR206 (PR. DC)
Step 1. MACHINE CONDITION			Refer to SET UP Conditions at the beginning of this SECTION (ENCODER - W2).		

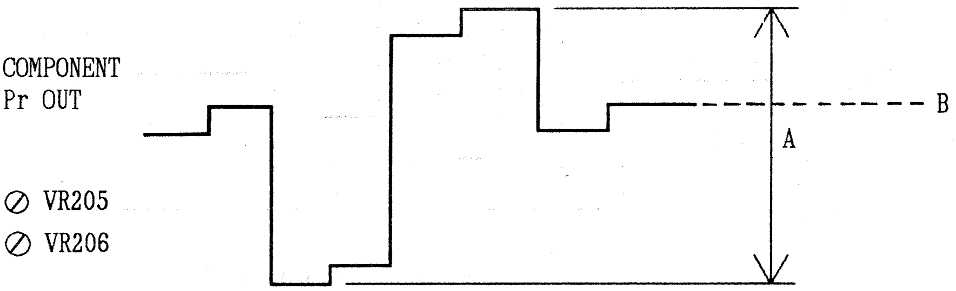
COMPONENT
Pr OUT
⊘ VR205
⊘ VR206
B
A

A = 0.7 ± 0.007Vp-p

"B" portion DC voltage 0 ± 20mVp-p

9-12. VIDEO BLANKING DC ADJUSTMENT

(W2 ENCODER)

TEST POINT	MODE	TAPE USED	M.EQ.	INPUT SIGNAL	ADJUSTMENT
VIDEO 2 OUT	EJECT	-----	OSCILLOSCOPE	---------	VR503 (V1, BLK, DC)

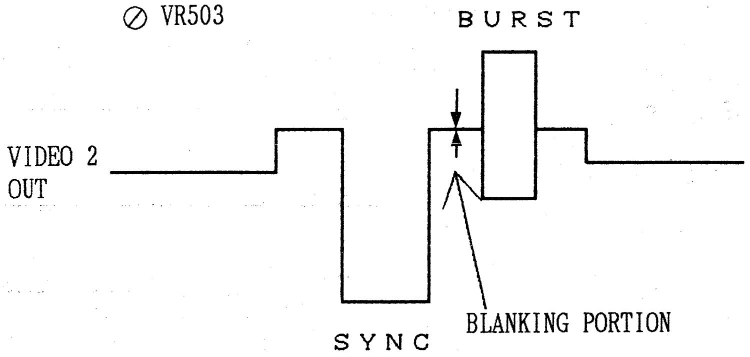
⊘ VR503
BURST
VIDEO 2
OUT
SYNC
BLANKING PORTION

VIDEO DC BLANKING LEVEL = 0 ± 20mV

9-13. VIDEO 2 OUTPUT LEVEL ADJUSTMENT

(W2 ENCODER)

TEST POINT	MODE	TAPE USED	M.EQ.	INPUT SIGNAL	ADJUSTMENT
VIDEO 2 OUT	PLAY	ALIGNMENT TAPE COLOUR BAR 100%	OSCILLOSCOPE (with 75Ω terminator)	---------	VR501 (VIDEO. G) VR502 (VIDEO. DC)

Step 1. MACHINE CONDITION	Refer to SET UP Conditions at the beginning of this SECTION (ENCODER - W2).

Step 2.

1. Adjust VR501 so that the video level (A) is 0.7 ± 0.007Vp-p.
2. Adjust VR502 so that the Vidoe DC level (B) is 0 ± 5mV DC.

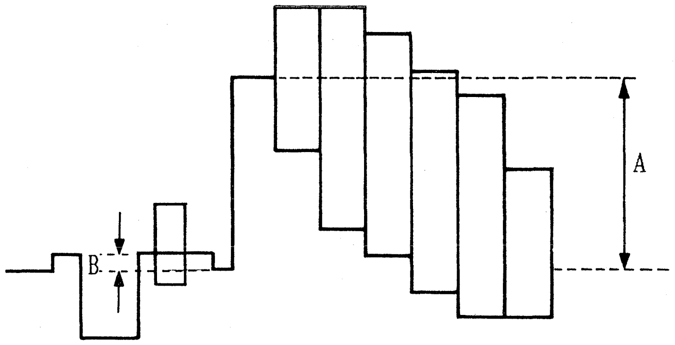

⊘ VR501 A = 0.7 ± 0.007Vp-p
⊘ VR502 B = 0 ± 5mV (DC)

9-14. BURST ADJUSTMENT

(W2 ENCODER)

TEST POINT	MODE	TAPE USED	M.EQ.	INPUT SIGNAL	ADJUSTMENT
VIDEO 2 OUT	E-E (EJECT)	-----	OSCILLOSCOPE	COMPONENT 100% COLOUR BAR	VR510 (BF ϕ) VR511 (BF. WID)

SPECIFICATIONS

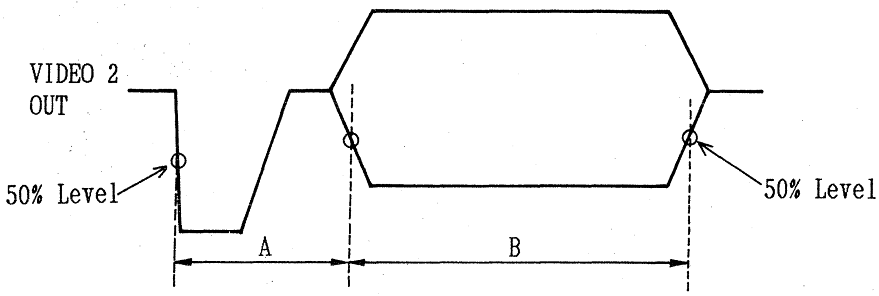

BURST POSITION (⊘ VR510) : A = 5.6 ± 0.1μsec.

BURST WIDTH (⊘ VR511) : B = 2.25 ± 0.23μsec.

9-15. VIDEO BURST LEVEL ADJUSTMENT

(W2 ENCODER)

TEST POINT	MODE	TAPE USED	M.EQ.	INPUT SIGNAL	ADJUSTMENT
VIDEO 2 OUT	E-E (EJECT)	-----	OSCILLOSCOPE (with 75Ω terminator)	---------	VR513 (V1. BURST. G) VR512 (BURST BAL)

1. Adjust VR513 so that the burst level (A) is 0.3 ± 0.004Vp-p.
2. Adjust VR512 so that the carrier leak is nulled.

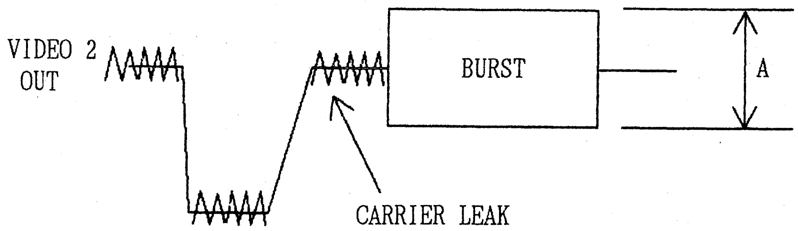

BURST LEVEL (⊘ VR513) : A = 0.3 ± 0.004Vp-p

CARRIER LEAK (⊘ VR512) → NULLED (less than 3mVp-p)

9-16. CARRIER LEAKAGE ADJUSTMENT

(W2 ENCODER)

TEST POINT	MODE	TAPE USED	M.EQ.	INPUT SIGNAL	ADJUSTMENT
VIDEO 2 OUT	PLAY	ALIGNMENT TAPE COLOUR BAR	OSCILLOSCOPE (with 75Ω terminator)	---------	VR505 (PB BAL) VR506 (PR BAL)

1. Adjust VR505 and VR506 so that the carrier leakage of the white portion is nulled.

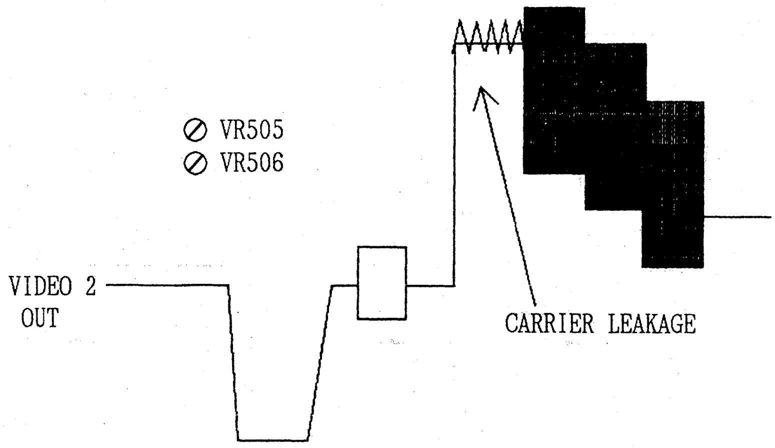

SPEC : CARRIER LEAKAGE IS LESS THAN 3mVp-p

2. If it is not, check the C A/D PEDESTAL VOLTAGE ADJ. (9-3)

9-17. VIDEO OUTPUT VECTOR ADJUSTMENT

(W2 ENCODER)

TEST POINT	MODE	TAPE USED	M.EQ.	INPUT SIGNAL	ADJUSTMENT
VIDEO 2 OUT	PLAY	ALIGNMENT COLOUR BAR 100%	VECTOR SCOPE (or TEK 1750)	---------	VR209 (UV BAL) VR507 (VIDEO. CG) VR515 (HUE. OFS1) VR516 (QUAD) VR517 (HUE. OFS2)

Step 1. MACHINE CONDITION	Refer to SET UP Conditions at the beginning of this SECTION (ENCODER - W2).
Step 2. 1. VR517 : CENTRE POSITION (FOR USER VR) 2. Adjust VR209/VR507/VR515/VR516 so that each of the vectors phase and levels are in the 2% Box of the vector scope.	VIDEO OUT 2 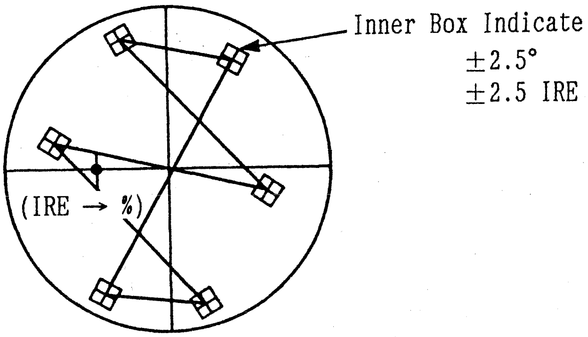

9-18. COMPONENT Y/C TIMING ADJUSTMENT

(W2 ENCODER)

TEST POINT	MODE	TAPE USED	M.EQ.	INPUT SIGNAL	ADJUSTMENT
COMPONENT Y OUT Pr OUT	PLAY	ALIGNMENT TAPE COLOUR BAR	OSCILLOSCOPE OR W.F.M.	---------	VR213 (Y/Pr) Y/C TIMING PRESET VR (on Front Sub Panel) Y/C TIMING MANUAL VR (on Front Sub Panel) VR211 (Y/Pb)

Step 1.

1. Set the Y/C DELAY SW on the Front Sub Panel to MANUAL mode.
2. SCOPE CH1 : COMPONENT Y OUT (Ref.)
   SCOPE CH2 : COMPONENT Pb OUT
3. Adjust VR211 so that centre of range which be able to be control by Y/C DELAY MANUAL VR, is Y/Pb timing 0sec. point.
4. Set the Y/C DELAY SW on the Front Sub Panel to PRESET mode.
5. Adjust the Y/C DELAY PRESET VR (VR213) on the Front Sub Panel so that Y/Pb timing is 0 ± 10 n sec.
6. SCOPE CH1 : COMPONENT Y OUT (Ref.)
   SCOPE CH2 : COMPONENT Pr OUT
7. Adjust VR213 so that Y/Pr timing is 0 ± 10 n sec.

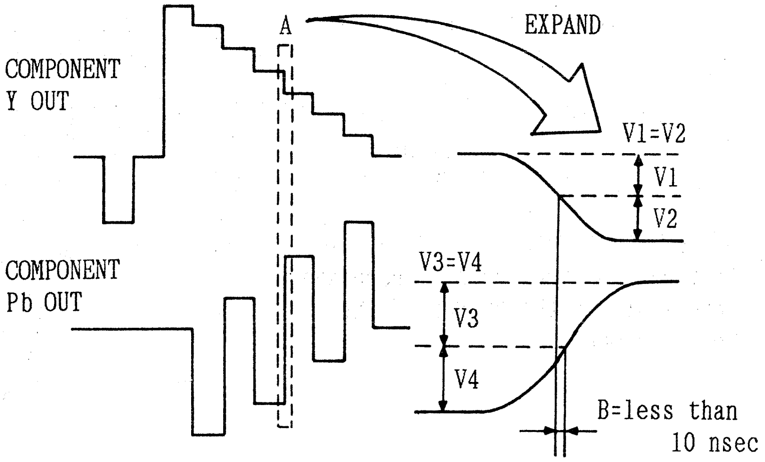
COMPONENT
Y OUT
A
EXPAND
V1=V2
V1
V2
COMPONENT
Pb OUT
V3=V4
V3
V4
B=less than
10 nsec

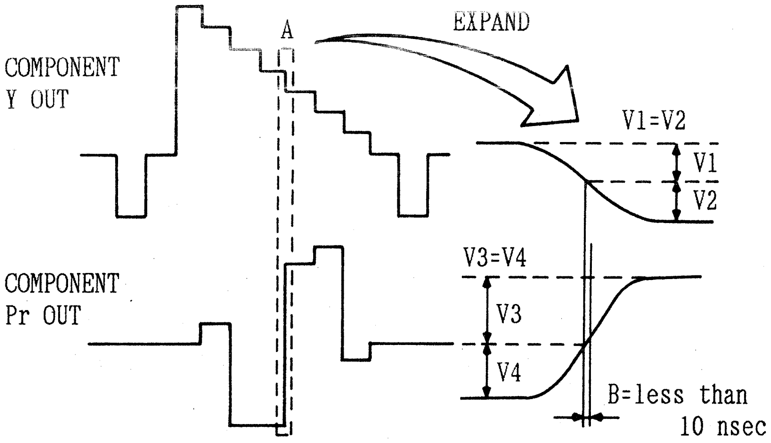
COMPONENT
Y OUT
A
EXPAND
V1=V2
V1
V2
COMPONENT
Pr OUT
V3=V4
V3
V4
B=less than
10 nsec

9-19. COMPOSITE Y/C TIMING ADJUSTMENT

(W2 ENCODER)

TEST POINT	MODE	TAPE USED	M.EQ.	INPUT SIGNAL	ADJUSTMENT
VIDEO 2 OUT	PLAY	ALIGNMENT TAPE PULSE & BAR (Y/C TIMING)	WAVEFORM MONITOR	---------	VR207 (Y/U) VR208 (Y/V)

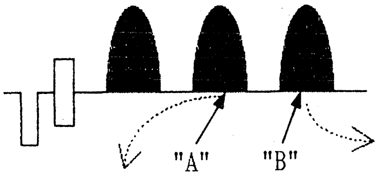

Adjust VR207 so the "B" portion is flat

Adjust VR208 so the "A" portion is flat

9-20. VIDEO 1 OUTPUT LEVEL CONFIRMATION

(W2 ENCODER)

TEST POINT	MODE	TAPE USED	M.EQ.	INPUT SIGNAL	ADJUSTMENT
VIDEO 1 OUT	PLAY	ALIGNMENT TAPE COLOUR BAR 100%	OSCILLOSCOPE (with 75Ω termination)	---------	VR210 (SYNC G.) VR501 (VIDEO G.) VR513 (BURST G.)

Step 1. MACHINE CONDITION	Refer to SET UP Conditions at the beginning of this SECTION (ENCODER - W2).

Step 2.

1. Confirm the following specifications.

   1) VIDEO LEVEL (A) = 0.7 ± 0.01Vp-p
   2) SYNC LEVEL (B) = 0.3 ± 0.006Vp-p
   3) BURST LEVEL (C) = 0.3 ± 0.004Vp-p

2. If it is not within specification, readjust VR210, VR501, VR513 (9-6 COMPOSITE SYNC LEVEL, 9-13 VIDEO 2 OUTPUT LEVEL, 9-15 VIDEO BURST LEVEL.)

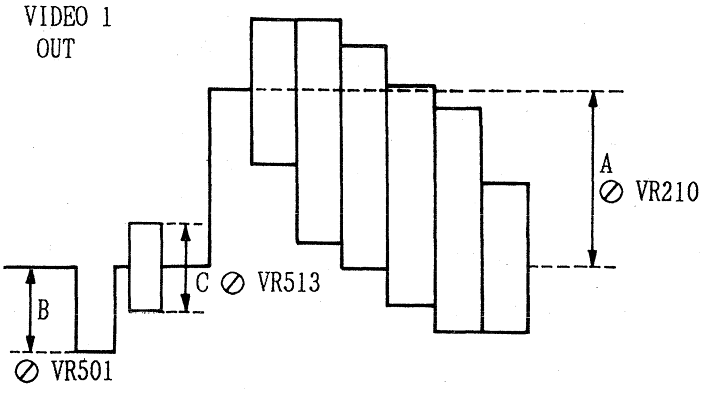

9-21. Y/C OUT VECTOR ADJUSTMENT (1)

(W2 ENCODER)

TEST POINT	MODE	TAPE USED	M.EQ.	INPUT SIGNAL	ADJUSTMENT
Y/C OUT (S1-VIDEO)	PLAY	ALIGNMENT COLOUR BAR 100%	VECTOR SCOPE	---------	VR508 (Y/C C. PHASE) VR509 (Y/C C. G)

Step 1. [CONNECTION]

1. Please use S1-Video to BNC Conversion CONNECTOR (4P→BNC).
2. Connect the vector scope to Y & C Output through the conversion cable as shown in figure.

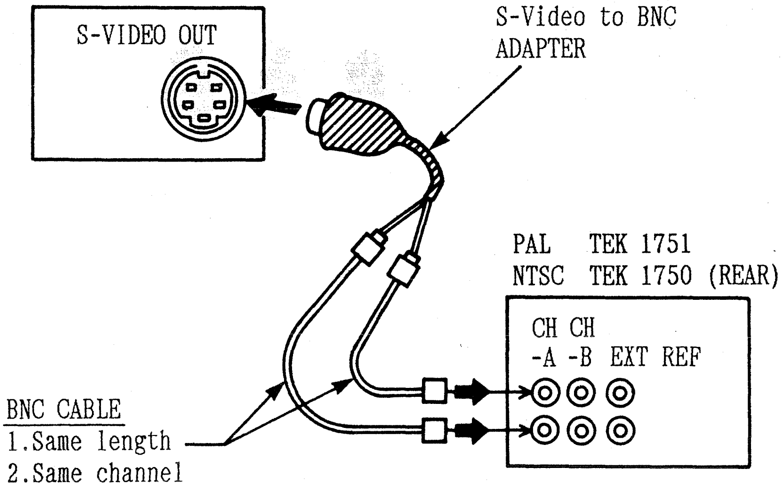
S-VIDEO OUT
S-Video to BNC ADAPTER
PAL TEK 1751
NTSC TEK 1750 (REAR)
CH -A
CH -B
EXT REF
BNC CABLE
1.Same length
2.Same channel

Step 2.

1. Connect the vector scope to signal generator, and set the vector scope the burst level 100%
2. Reconnect the vector scope to S1-VIDEO OUT on the Rear Panel. (Refer to Step 1.)
3. Adjust VR508 and VR509 so that the each vector is within the 2% box on the vector scope.

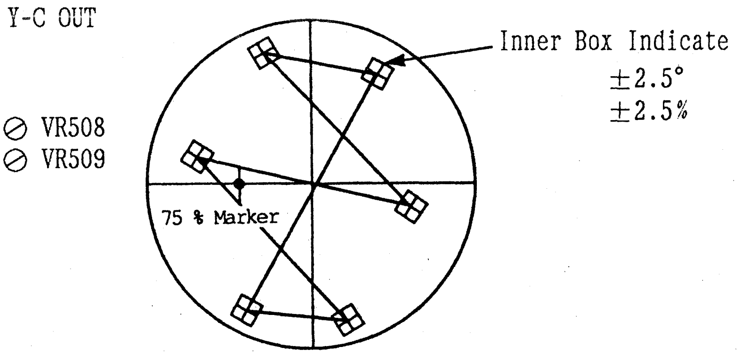
Y-C OUT
⊘ VR508
⊘ VR509
Inner Box Indicate
±2.5°
±2.5%
75 % Marker

9-22. Y/C OUT VECTOR ADJUSTMENT (2)

(W2 ENCODER)

TEST POINT	MODE	TAPE USED	M.EQ.	INPUT SIGNAL	ADJUSTMENT
Y/C OUT (S1-VIDEO)	PLAY	ALIGNMENT COLOUR BAR 100%	OSCILLOSCOPE (with 75Ω terminator)	---------	VR514 (Y/C BURST. G)
BURST LEVEL = 0.3 ± 0.004Vp-p					

9-23. VIDEO OUTPUT FREQUENCY RESPONSE ADJUSTMENT

(W2 ENCODER)

TEST POINT	MODE	TAPE USED	M.EQ.	INPUT SIGNAL	ADJUSTMENT
TP502 TP 1	PLAY	ALIGNMENT TAPE SWEEP	OSCILLOSCOPE	---------	VC501 (VIDEO F.R.)

Step 1. MACHINE CONDITION	1. Refer to SET UP Conditions at the beginning of this SECTION (ENCODER - W2). 2. Connect a jumper wire between F15A (card edge) and GND to cut chroma signal.
Step 2. 1. SCOPE CH1 : TP 1 (Ref.) SCOPE CH2 : TP502 2. Adjust VC501 so that the frequency response at TP502 is the same as it at TP1.	⊘ VC501 SPECIFICATION TP502 = TP1 Frequency Characteristic is same. (0.5MHz = 100%) (4MHz = 100% ± 3%)

9-24. Y OUTPUT FREQUENCY RESPONSE ADJUSTMENT

(W2 ENCODER)

TEST POINT	MODE	TAPE USED	M.EQ.	INPUT SIGNAL	ADJUSTMENT
TP202 TP 1	PLAY	ALIGNMENT TAPE SWEEP	OSCILLOSCOPE	---------	VC201 (Y FREQ. RES.)

Step 1.

1. SCOPE CH1 : TP 1 (Ref.)
   SCOPE CH2 : TP202

2. Adjust VC201 so that the frequency response at TP502 is the same as it at TP1.

⊘ VC201

SPECIFICATION
TP202 = TP1
Frequency Characteristic is same.
(0.5MHz = 100%)
(4MHz = 100% ± 3%)

9-25. SUPERIMPOSE CHARACTER LEVEL ADJUSTMENT

(W2 ENCODER)

TEST POINT	MODE	TAPE USED	M.EQ.	INPUT SIGNAL	ADJUSTMENT
TP503 (VIDEO 3 OUT)	PLAY	ALIGNMENT TAPE COLOUR BAR	OSCILLOSCOPE	---------	VR504 (V3 BLK. DC.)

Step 1.

1. SCOPE : TP503

2. Check that the Character Level "A" is 1.14 ± 0.1Vp-p as shown.

3. Adjust VR504 so that the DC level of Character is same as DC level of H. Blanking.

TP503

⊘ VR504

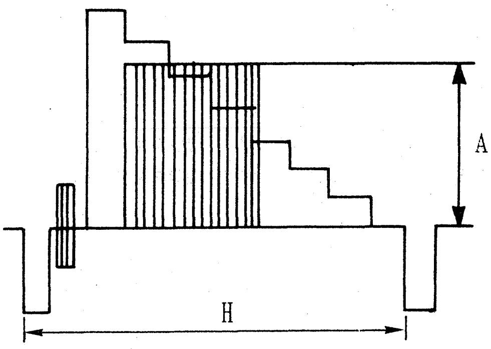

10. TBC & SYNC GEN (W1) BOARD (2/2)

TBC & SYNC GEN. SECTION (2/2) (W1) FLOWCHART FOR AU-65

＊BEFORE ADJUSTMENT
The adjustment with this comment is necessary to adjust after the following adjustments are completed.

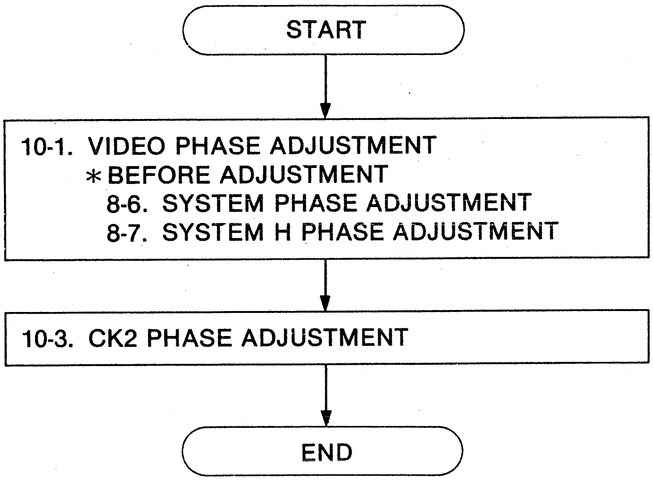
START
10-1. VIDEO PHASE ADJUSTMENT
＊BEFORE ADJUSTMENT
8-6. SYSTEM PHASE ADJUSTMENT
8-7. SYSTEM H PHASE ADJUSTMENT
10-3. CK2 PHASE ADJUSTMENT
END

TBC & SYNC GEN. SECTION (2/2) (W1) FLOWCHART FOR AU-63H/AU-63, AU-62H/AU-62

＊BEFORE ADJUSTMENT
The adjustment with this comment is necessary to adjust after the following adjustments are completed.

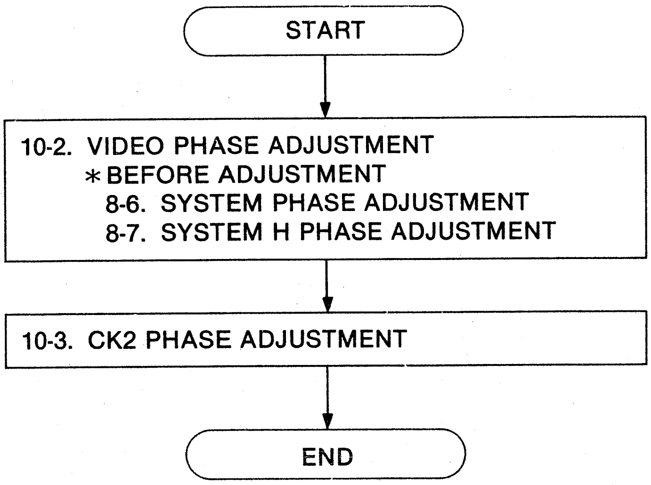
START
10-2. VIDEO PHASE ADJUSTMENT
＊BEFORE ADJUSTMENT
8-6. SYSTEM PHASE ADJUSTMENT
8-7. SYSTEM H PHASE ADJUSTMENT
10-3. CK2 PHASE ADJUSTMENT
END

10. TBC & SYNC GEN (W1) BOARD (2/2)

10-1. VIDEO PHASE ADJUSTMENT (FOR AU-65H / AU-65)

TEST POINT	MODE	TAPE USED	M.EQ.	INPUT SIGNAL	ADJUSTMENT
VIDEO 2 OUT	E-E (EJECT)	------	SCH METER TEK 1751	LINE IN	SW203 (V. PHASE COARSE) VR207 (V. PHASE FINE)

Step 1.

CONNECTION METHOD

SCH METER TRIGGER : EXT

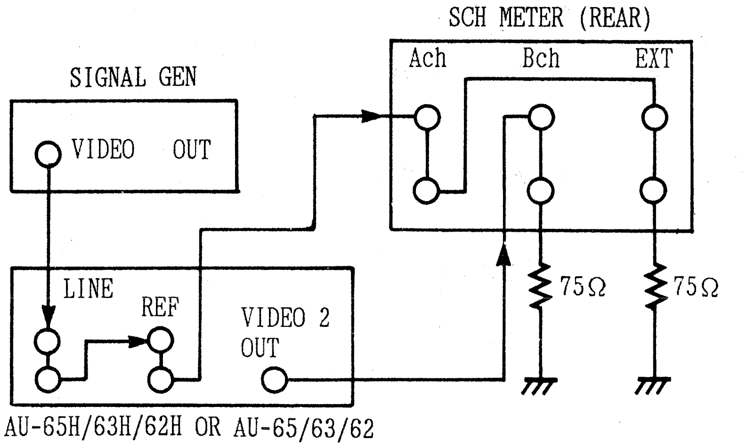
SCH METER (REAR)
Ach
Bch
EXT
SIGNAL GEN
VIDEO OUT
LINE
REF
VIDEO 2 OUT
75Ω
75Ω
AU-65H/63H/62H OR AU-65/63/62

Step 2.

1. Confirm the SYSTEM PHASE Adjustments in TBC & SYNC GEN (W1) 1/2 section.

Step 3.

1. Confirm that the VIDEO phase of VIDEO 2 OUTPUT (B ch of WFM Monitor) is same as VIDEO phase of REF. VIDEO (A ch of WFM Monitor).
2. If it is not, adjust SW203 and VR207 so that the VIDEO phase of VIDEO 2 OUTPUT (Bch of WFM Monitor) and the REF. VIDEO (A ch of WFM Monitor) are the same phase as shown.

Note:
Don't check (A) portion, because this edge is made by blanking circuit.
So, check other portion.

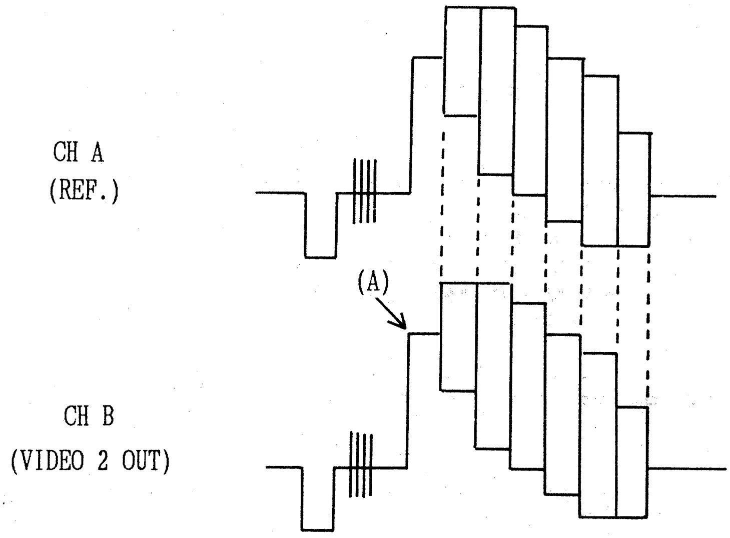
CH A
(REF.)
(A)
CH B
(VIDEO 2 OUT)

10-2. VIDEO PHASE ADJUSTMENT
(FOR AU-63H/62H and AU-63/62)

TEST POINT	MODE	TAPE USED	M.EQ.	INPUT SIGNAL	ADJUSTMENT
VIDEO 2 OUT	PLAY	ALIGNMENT TAPE COLOUR BAR	SCH METER TEK 1751	SCH ADJ. FIXTURE TO REF. IN	SW203 (V. PHASE COARSE) VR207 (V. PHASE FINE)

Step 1.

CONNECTION METHOD

SCH METER TRIGGER : EXT

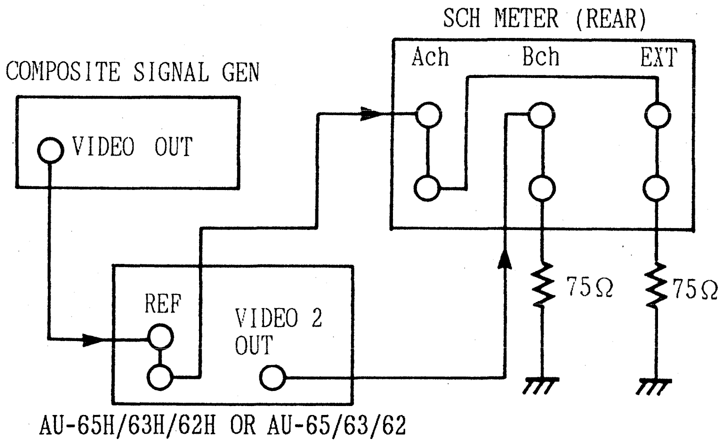
SCH METER (REAR)
Ach
Bch
EXT
COMPOSITE SIGNAL GEN
VIDEO OUT
REF
VIDEO 2 OUT
75Ω
75Ω
AU-65H/63H/62H OR AU-65/63/62

Step 2.

1. Confirm the SYSTEM PHASE Adjustments in TBC & SYNC GEN (W1) 1/2 section.

Step 3.

1. Confirm that the VIDEO phase of VIDEO 2 OUTPUT (B ch of WFM Monitor) is same as VIDEO phase of REF. VIDEO (A ch of WFM Monitor).
2. If it is not, adjust SW203 and VR207 so that the VIDEO phase of VIDEO 2 OUTPUT (Bch of WFM Monitor) and the REF. VIDEO (A ch of WFM Monitor) are the same phase as shown.

Note:
1. Don't check (A) portion, because this edge is made by blacking circuit. So, check other portion.
2. If the VIDEO phase is not same perfectly, adjust the average is the same.

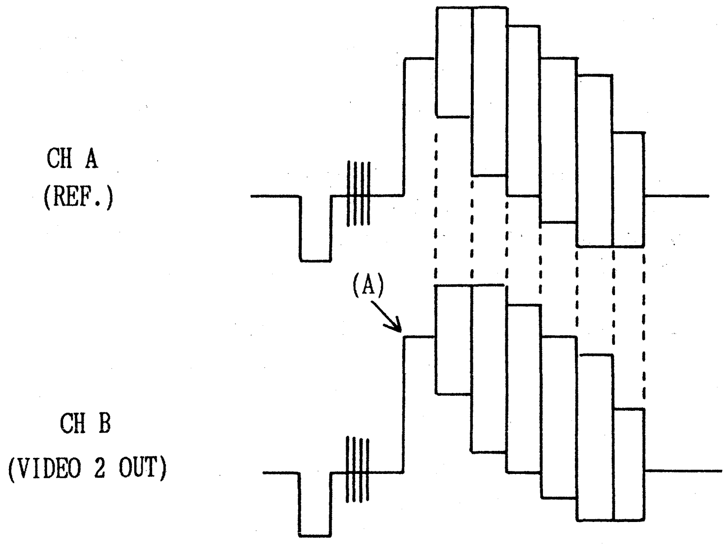
CH A
(REF.)
(A)
CH B
(VIDEO 2 OUT)

10-3. CK 2 PHASE ADJUSTMENT

(W1 TBC & SYNC GEN)

TEST POINT	MODE	TAPE USED	M.EQ.	INPUT SIGNAL	ADJUSTMENT
VIDEO 2 OUT	SELF REC/PLAY	BLANK TAPE	VECTOR SCOPE	COMPOSITE 100% COLOUR BAR	VR207 (CK2 PHASE) SW7 (VISC BLANK SW)

Step 1.

MACHINE CONDITION

SW7 (on W1) : OFF

Step 2.

CONNECTION METHOD

SCH METER TRIGGER : EXT

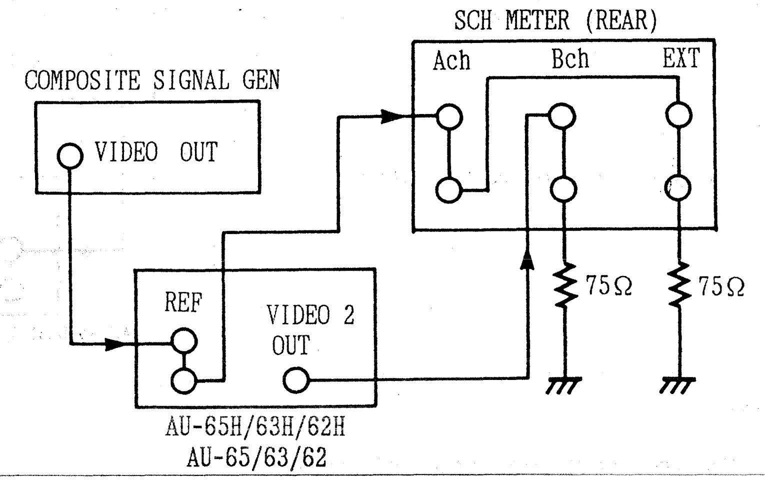
SCH METER (REAR)
Ach
Bch
EXT
COMPOSITE SIGNAL GEN
VIDEO OUT
REF
VIDEO 2 OUT
75Ω
75Ω
AU-65H/63H/62H
AU-65/63/62

Step 3.

1. Make a recording for a few minutes and play back the just recorded portion.
2. Adjust VR207 so that the VISC signal phase is centre of Burst axis. (0° ±2°)
3. SW7 : ON

Note: This adjustment should be always completed after completing VISC phase adjustment (Item 13-18) of DECODER W4 board.

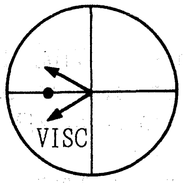

11. ENCODER (W2) BOARD (2/2) — VISC CONTROL SECTION

VISC CONTROL SECTION (2/2) (W2) FLOWCHART FOR ALL MODELS

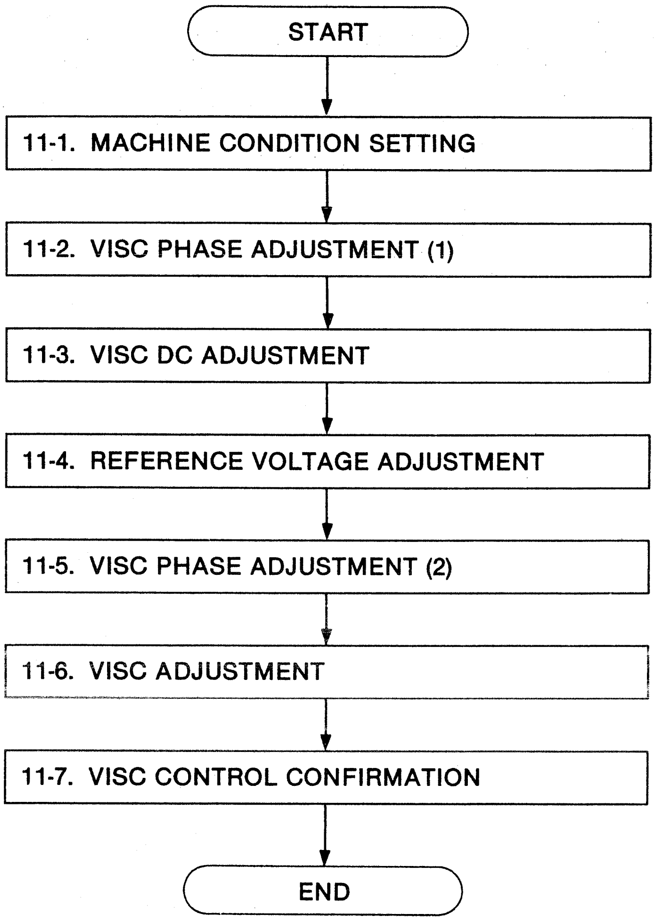
START
11-1. MACHINE CONDITION SETTING
11-2. VISC PHASE ADJUSTMENT (1)
11-3. VISC DC ADJUSTMENT
11-4. REFERENCE VOLTAGE ADJUSTMENT
11-5. VISC PHASE ADJUSTMENT (2)
11-6. VISC ADJUSTMENT
11-7. VISC CONTROL CONFIRMATION
END

11. ENCODER (W2 BOARD (2/2)
— VISC CONTROL SECTION —
11-1. MACHINE CONDITION SETTING

1. CF SELECT SW (on Front Sub Panel) ----------------------- 8F
2. TAPE/EE SELECT (on Pull Out Drawer) ----------------------- EE
3. SYNC SELECT SW (on Front Sub Panel) ----------------------- AUTO
4. COMPONENT Y/Pr/Pb LEVEL VR (on Pull Out Drawer) --- DETENT POSITION
5. VIDEO LEVEL VR ----------------------------------- DETENT POSITION
6. SET UP LEVEL VR ----------------------------------- DETENT POSITION
7. CHROMA LEVEL VR ----------------------------------- DETENT POSITION
8. HUE VR ----------------------------------- DETENT POSITION

11-2. VISC PHASE ADJUSTMENT (1)

(W2 ENCODER)

TEST POINT	MODE	TAPE USED	M.EQ.	INPUT SIGNAL	ADJUSTMENT
TP801 TP802	SELF REC/PLAY	BLANK TAPE	VECTORSCOPE	COMPOSITE 100% COLOUR BAR	VR800 (VISC ϕ1)

Step 1. MACHINE CONDITION	SW800 (on W2) : OFF (VISC CONT SW) SW801 (on W2) : OFF (VISC ANALOGUE CONT SW)
Step 2. CONNECTION METHOD	VECTORSCOPE (Trigger : EXT) 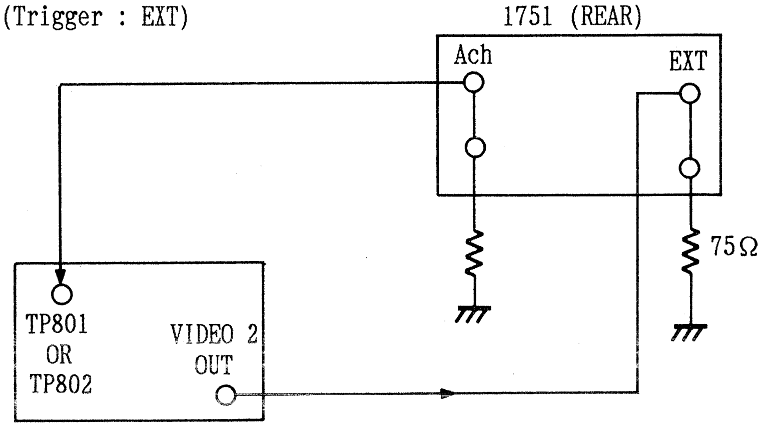 1751 (REAR) Ach EXT 75Ω TP801 OR TP802 VIDEO 2 OUT
Step 3. 1. Make a recording for a few minutes and play back the just recorded portion. 2. Connect the vectorscope to TP801 and set the vectorscope to 12 o'clock position. 3. Re-connect the vectorscope to TP802 and adjust VR800 so that the phase at TP802 comes to 9 o'clock position. Note: This adjustment should be always completed after completing VISC phase adjustment (Item 13-18) of DECODER W4 board.	VR800 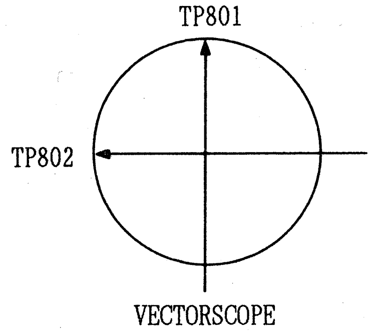

11-3. VISC DC ADJUSTMENT

(W2 ENCODER)

TEST POINT	MODE	TAPE USED	M.EQ.	INPUT SIGNAL	ADJUSTMENT
TP803	SELF REC/PLAY	BLANK TAPE	OSCILLOSCOPE	COMPOSITE 100% COLOUR BAR	VR802 (VISC. DC)

Step 1. MACHINE CONDITION	SW800 (on W2) : OFF (VISC CONT SW) SW801 (on W2) : OFF (VISC ANALOGUE CONT SW)
Step 2. SCOPE : TP803 1. Make a recording for a few minutes and play back the just recorded portion. 2. Adjust VR802 so that the reading of DC voltage is 0 ± 0.005V. Note: This adjustment should be always completed after completing VISC phase adjustment (Item 13-18) of DECODER W4 board.	⊘ VR802 SPECIFICATION : 0 ± 0.005V DC

11-4. REFERENCE VOLTAGE ADJUSTMENT

(W2 ENCODER)

TEST POINT	MODE	TAPE USED	M.EQ.	INPUT SIGNAL	ADJUSTMENT
SW801	SELF REC/PLAY	ALIGNMENT TAPE VISC	OSCILLOSCLPE AND VECTORSCOPE	COMPOSITE 100% COLOUR BAR	VR803 (REF. VOLT)

Step 1. MACHINE CONDITION	SW800 (on W2) : OFF (VISC CONT SW)
Step 2. 1. Make a recording for a few minutes and play back the just recorded portion. 2. Adjust VR803 so that the voltage in difference between leads of SW801 becomes 0 ± 0.005V. 3. Confirm that the phase of VISC is not changed even if the SW801 is on and off. Note: This adjustment should be always completed after completing VISC phase adjustment (Item 13-18) of DECODER W4 board.	⊘ VR803 SPECIFICATION : 0 ± 0.005V DC

11-5. VISC PHASE ADJUSTMENT (2)

(W2 ENCODER)

TEST POINT	MODE	TAPE USED	M.EQ.	INPUT SIGNAL	ADJUSTMENT
VIDEO 2 OUT	SELF REC/PLAY	BLANK TAPE	VECTOR SCOPE	COMPOSITE 100% COLOUR BAR	VR801 (VISC. ϕ2)

Note:
Confirm the Adjustment of W1 and W2 (1/2), completeness.

Step 1.

MACHINE CONDITION

1. Refer to Machine Condition at the beginning of this section. (W2-ENCODER 2/2)
2. SW800 (on W2) → OFF (VISC CONT SW)
   SW801 (on W2) → ON (VISC ANALOGUE CONT SW)
   SW 7 (on W1) → OFF (VISC BLANK SW)

Step 2.

1. Make a recording for a few minutes and play back the just recorded portion.
2. Check and mark VR207 on the W1 P.C.Board, and set so that the VISC phase is on the R-Y axis upper portion.

Note: This adjustment should be always completed after completing VISC phase adjustment (Item 13-18) of DECODER W4 board.

OSCILLOSCOPE : DELAY MODE

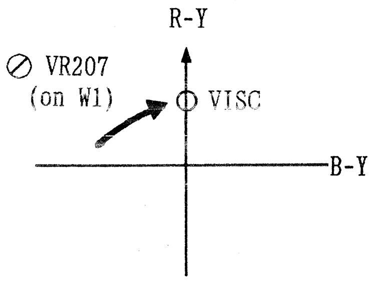

Step 3.

1. Observe the vector scope the VISC phase is pulled in the horizontal axis between the burst when SW800 is "ON" mode.
2. Check the moving speed of VISC with SW800 "ON".
   It has 2 pattern.

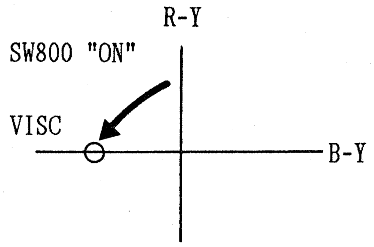

VISC MOVING PATTERN
(1) Pulling in VISC is slowly by Analog Control.
(2) Pulling in VISC is quick by Digital Control.

Step 4. 1. When VR801 is turned, changing point of moving pattern is appeared in range of VR801. 2. Adjust VR801 so that the VR position is changing point of VISC moving pattern. Note: In this adjustment, repeat SW800 "ON" and "OFF".	SW800 → ON 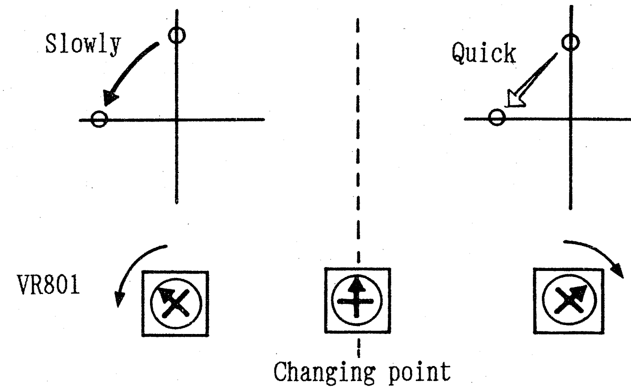 Slowly Quick VR801 Changing point
Step 5. If the changing point of moving pattern is 2 in the range of VR801, adjust this procedure as following. 1. Set the VR801 (on W2) changing points of moving pattern. 2. Reset the VR207 on W1 P.C.Board so that VISC phase is 45°. 3. VR801 have 2 changing points (A) and (B) at VISC 90° condition. When VISC is 45° and SW800 is "ON", one is pulled in U axis slowly but another is quick it. 4. Adjustment position VR is changing point at VISC 90° and slowly pulling as VISC 45°.	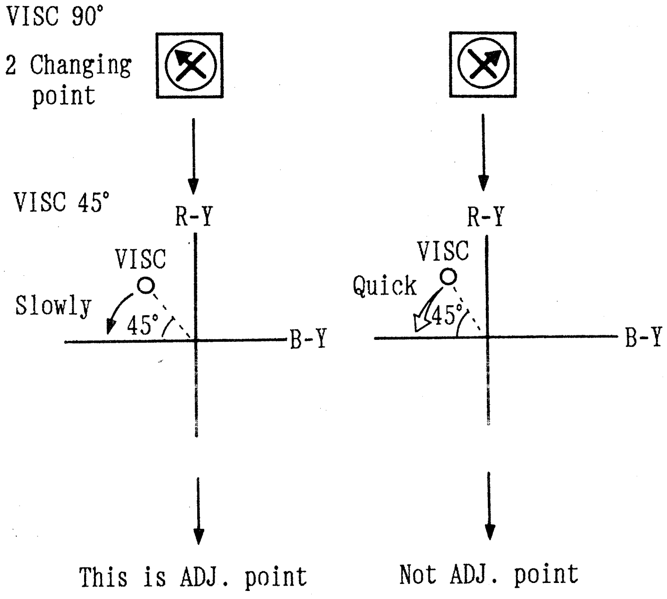 VISC 90° 2 Changing point VISC 45° R-Y VISC Slowly 45° B-Y R-Y VISC Quick 45° B-Y This is ADJ. point Not ADJ. point
Step 6. 1. Set VR207 on W1 P.C.Board so that VISC phase is R-Y under side. 2. Confirm the function of VISC control is same of Step 3, 4 and 5.	
Step 7. 1. After adjustment, set SW800 "OFF" mode. 2. Adjust VR207 on W1 P.C.Board so that the VISC signal is horizontal axis (B-Y) between the burst.	SW800 → OFF 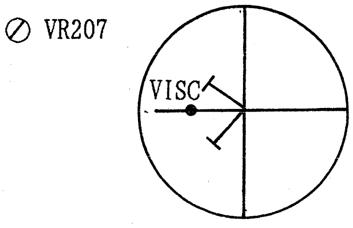
Step 8. 1. Reset SW800 "ON" mode. 2. Reset SW7 on W1 P.C.Board "ON" mode.	SW800 (on W2) → ON SW 7 (on W1) → ON

11-6. VISC ADJUSTMENT

(W2 ENCODER)

<table>
<tr><th>TEST POINT</th><th>MODE</th><th>TAPE USED</th><th>M.EQ.</th><th>INPUT SIGNAL</th><th>ADJUSTMENT</th></tr>
<tr><td>VIDEO 2
OUT</td><td>SELF
REC/PLAY</td><td>BLANK TAPE</td><td>VECTORSCOPE</td><td>COMPOSITE
100%
COLOUR BAR</td><td>VR802 (VISC. DC)</td></tr>
<tr><td colspan="3">Step 1.
MACHINE CONDITION</td><td colspan="3">SW800 (on W2) : ON (VISC CONT SW)
SW801 (on W2) : ON (VISC ANALOGUE CONT SW)</td></tr>
<tr><td colspan="3">Step 2.
VECTORSCOPE : VIDEO 2 OUT
1. Make a recording for a few minutes and play back the just recorded portion.
2. Adjust VR802 so that the vector aligns with horizontal axis between the burst.
Note: This adjustment should be always completed after completing VISC phase adjustment (Item 13-18) of DECODER W4 board.</td><td colspan="3">⊘ VR802
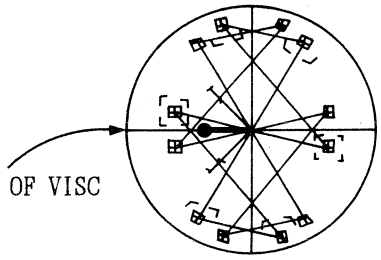
VECTOR OF VISC
PHASE DIFFERENCE BTWEEN BURST AND VISC = 0 ± 5°</td></tr>
</table>

11-7. VISC CONTROL CONFIRMATION

(W2 ENCODER)

TEST POINT	MODE	TAPE USED	M.EQ.	INPUT SIGNAL	ADJUSTMENT
VIDEO 2 OUT	SELF REC/PLAY	BLANK TAPE	VECTOR SCOPE	COMPOSITE 100% COLOUR BAR	VR206 (on W1) (CK2 PHASE)

Step 1. MACHINE CONDITION	SW800 (on W2) : ON (VISC CONT SW) SW801 (on W2) : ON (VISC ANALOGUE CONT SW)

Step 2.

CONNECTION METHOD

1. Make a recording for a few minutes and play back the just recorded portion.
2. Set the SW800 to off and set the CK2 phase VR206 so that the VISC phase is -120° apart from burst phase.
   Then confirm that the VISC phase aligns to horizontal axis between the burst when turning SW800 on.
3. Next, set the SW801 to off and set the CK2 phase VR206 so that the VISC phase is +120° apart from burst phase.
   Then confirm that the VISC phase aligns to horizontal axis between the barst when turning SW800 on.
4. If it does not work correctly, repeat the CK2 phase adjustment (VR206).

Note: This adjustment should be always completed after aompleting VISC phase adjustment (Item 13-18) of DECODER W4 board.

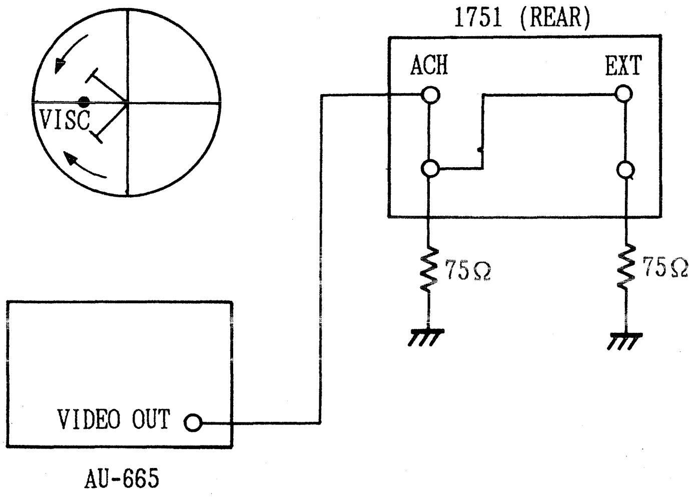

12. MODULATION & DEMODULATION (W3) BOARD (2/2)

MODULATION & DEMODULATION SECTION (2/2) (W3) FLOWCHART FOR AU-65H/AU-65

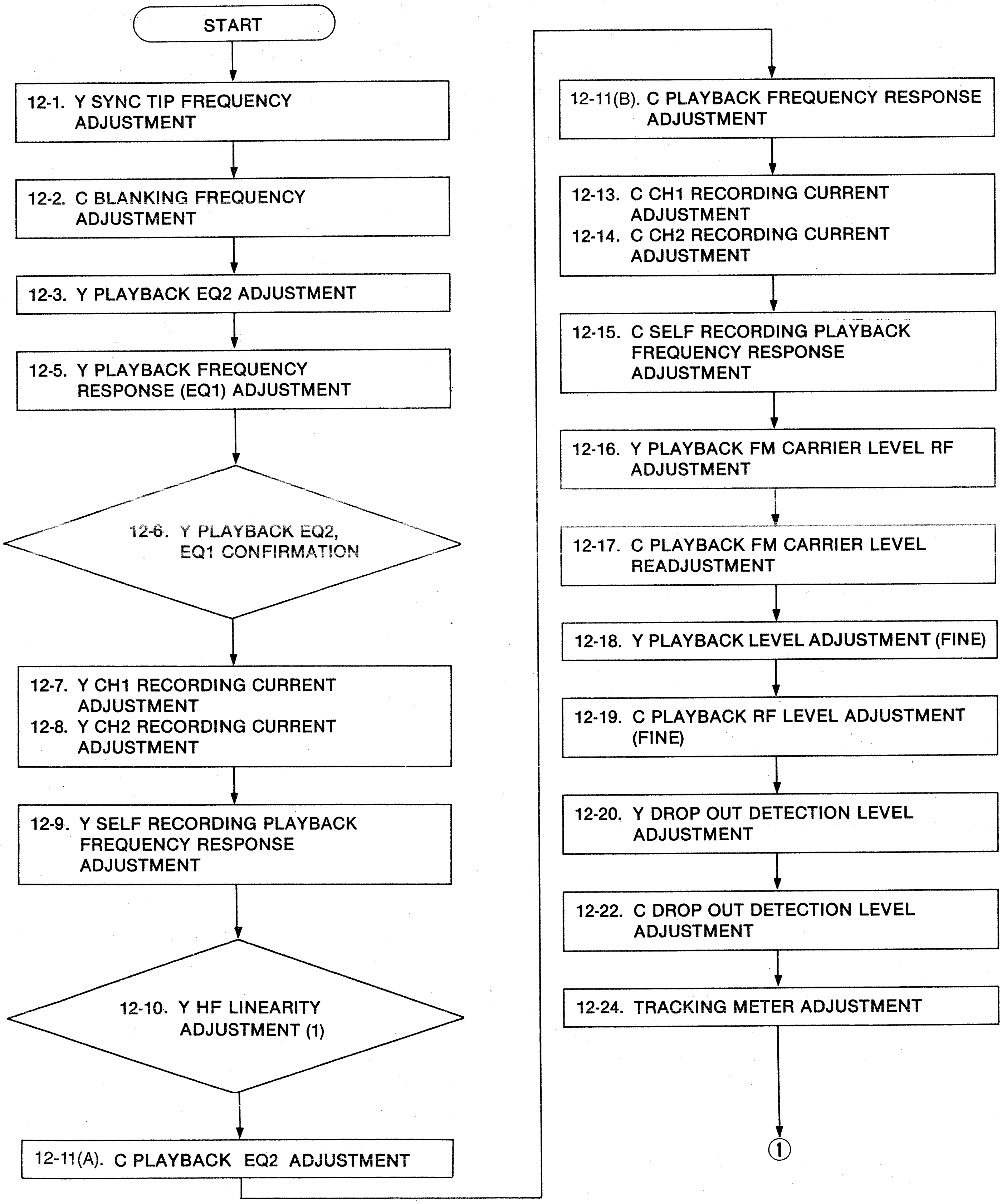

START
12-1. Y SYNC TIP FREQUENCY ADJUSTMENT
12-2. C BLANKING FREQUENCY ADJUSTMENT
12-3. Y PLAYBACK EQ2 ADJUSTMENT
12-5. Y PLAYBACK FREQUENCY RESPONSE (EQ1) ADJUSTMENT
12-6. Y PLAYBACK EQ2, EQ1 CONFIRMATION
12-7. Y CH1 RECORDING CURRENT ADJUSTMENT
12-8. Y CH2 RECORDING CURRENT ADJUSTMENT
12-9. Y SELF RECORDING PLAYBACK FREQUENCY RESPONSE ADJUSTMENT
12-10. Y HF LINEARITY ADJUSTMENT (1)
12-11(A). C PLAYBACK EQ2 ADJUSTMENT
12-11(B). C PLAYBACK FREQUENCY RESPONSE ADJUSTMENT
12-13. C CH1 RECORDING CURRENT ADJUSTMENT
12-14. C CH2 RECORDING CURRENT ADJUSTMENT
12-15. C SELF RECORDING PLAYBACK FREQUENCY RESPONSE ADJUSTMENT
12-16. Y PLAYBACK FM CARRIER LEVEL RF ADJUSTMENT
12-17. C PLAYBACK FM CARRIER LEVEL READJUSTMENT
12-18. Y PLAYBACK LEVEL ADJUSTMENT (FINE)
12-19. C PLAYBACK RF LEVEL ADJUSTMENT (FINE)
12-20. Y DROP OUT DETECTION LEVEL ADJUSTMENT
12-22. C DROP OUT DETECTION LEVEL ADJUSTMENT
12-24. TRACKING METER ADJUSTMENT
①

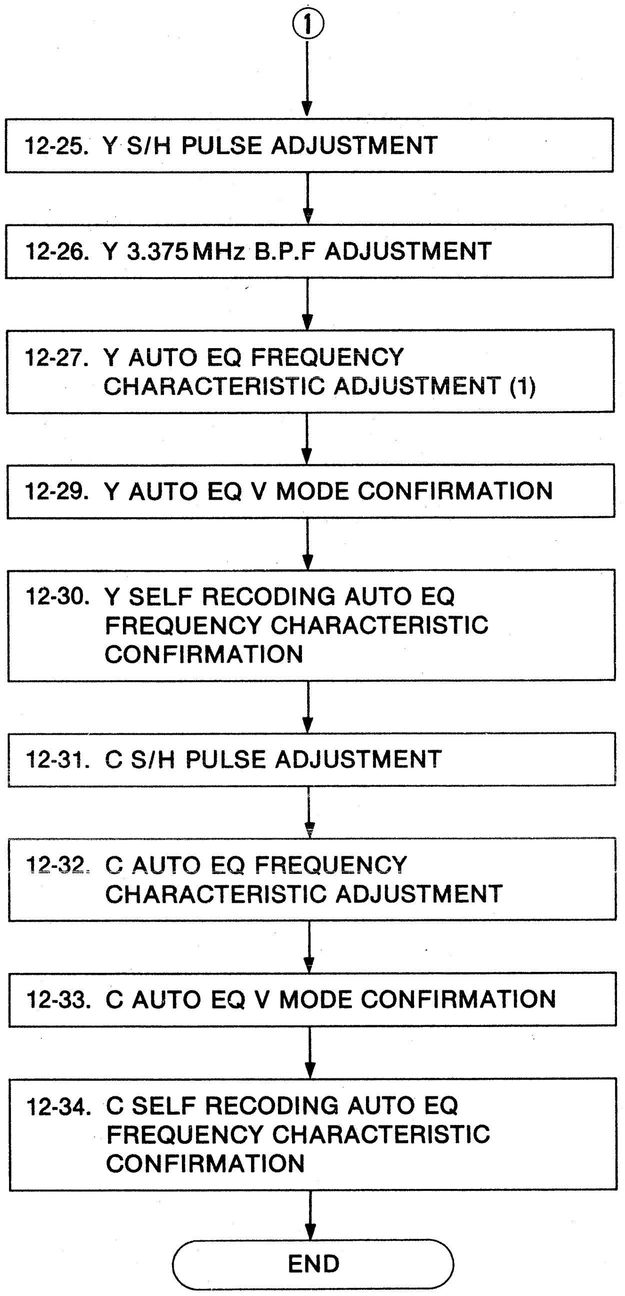
①
12-25. Y S/H PULSE ADJUSTMENT
12-26. Y 3.375MHz B.P.F ADJUSTMENT
12-27. Y AUTO EQ FREQUENCY CHARACTERISTIC ADJUSTMENT (1)
12-29. Y AUTO EQ V MODE CONFIRMATION
12-30. Y SELF RECODING AUTO EQ FREQUENCY CHARACTERISTIC CONFIRMATION
12-31. C S/H PULSE ADJUSTMENT
12-32. C AUTO EQ FREQUENCY CHARACTERISTIC ADJUSTMENT
12-33. C AUTO EQ V MODE CONFIRMATION
12-34. C SELF RECODING AUTO EQ FREQUENCY CHARACTERISTIC CONFIRMATION
END

MODULATION & DEMODULATION SECTION (2/2) (W3) FLOWCHART FOR AU-63H/AU-63

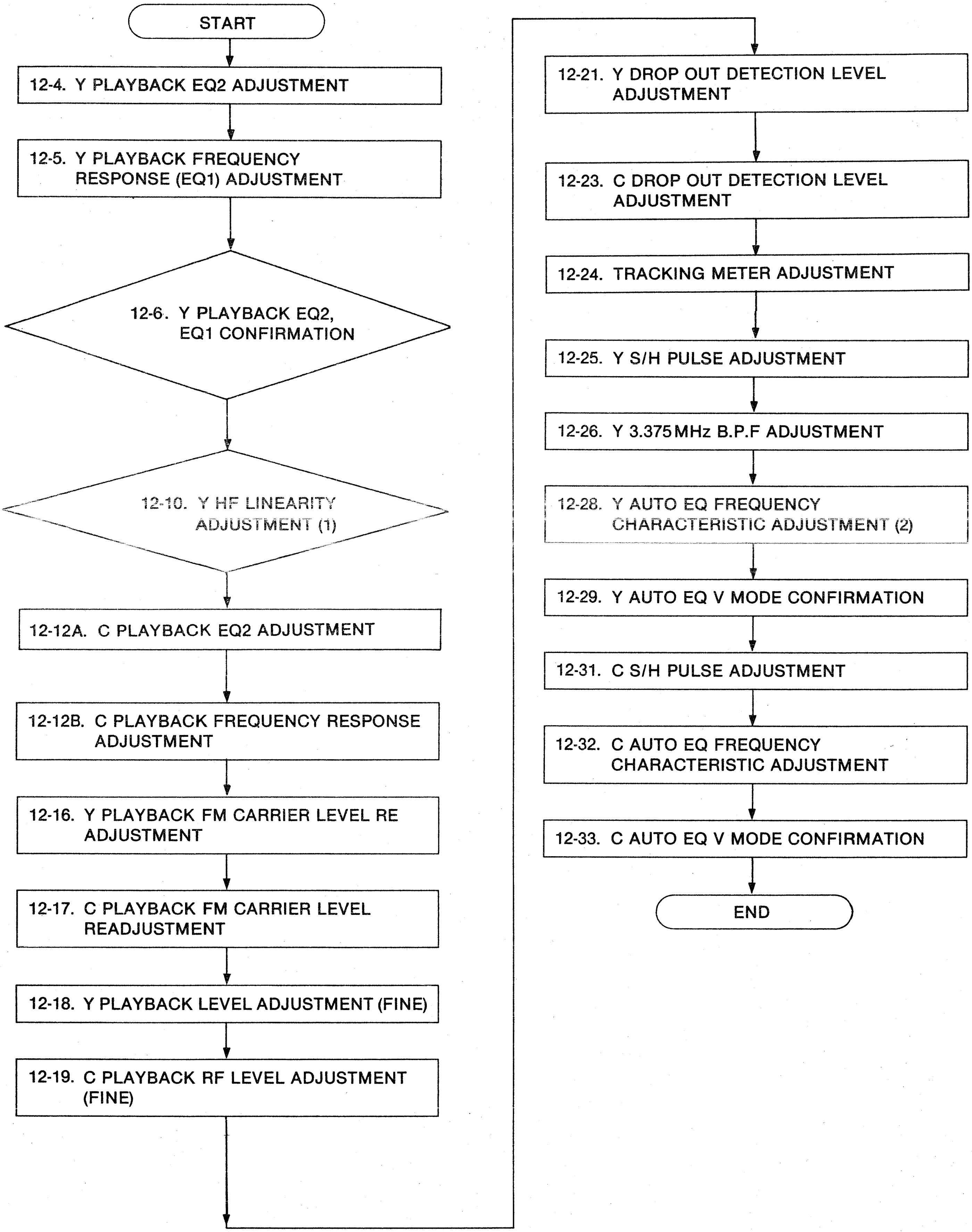
START
12-4. Y PLAYBACK EQ2 ADJUSTMENT
12-5. Y PLAYBACK FREQUENCY RESPONSE (EQ1) ADJUSTMENT
12-6. Y PLAYBACK EQ2, EQ1 CONFIRMATION
12-10. Y HF LINEARITY ADJUSTMENT (1)
12-12A. C PLAYBACK EQ2 ADJUSTMENT
12-12B. C PLAYBACK FREQUENCY RESPONSE ADJUSTMENT
12-16. Y PLAYBACK FM CARRIER LEVEL RE ADJUSTMENT
12-17. C PLAYBACK FM CARRIER LEVEL READJUSTMENT
12-18. Y PLAYBACK LEVEL ADJUSTMENT (FINE)
12-19. C PLAYBACK RF LEVEL ADJUSTMENT (FINE)
12-21. Y DROP OUT DETECTION LEVEL ADJUSTMENT
12-23. C DROP OUT DETECTION LEVEL ADJUSTMENT
12-24. TRACKING METER ADJUSTMENT
12-25. Y S/H PULSE ADJUSTMENT
12-26. Y 3.375MHz B.P.F ADJUSTMENT
12-28. Y AUTO EQ FREQUENCY CHARACTERISTIC ADJUSTMENT (2)
12-29. Y AUTO EQ V MODE CONFIRMATION
12-31. C S/H PULSE ADJUSTMENT
12-32. C AUTO EQ FREQUENCY CHARACTERISTIC ADJUSTMENT
12-33. C AUTO EQ V MODE CONFIRMATION
END

MODULATION & DEMODULATION SECTION (2/2) (W3) FLOWCHART FOR AU-62H/AU-62

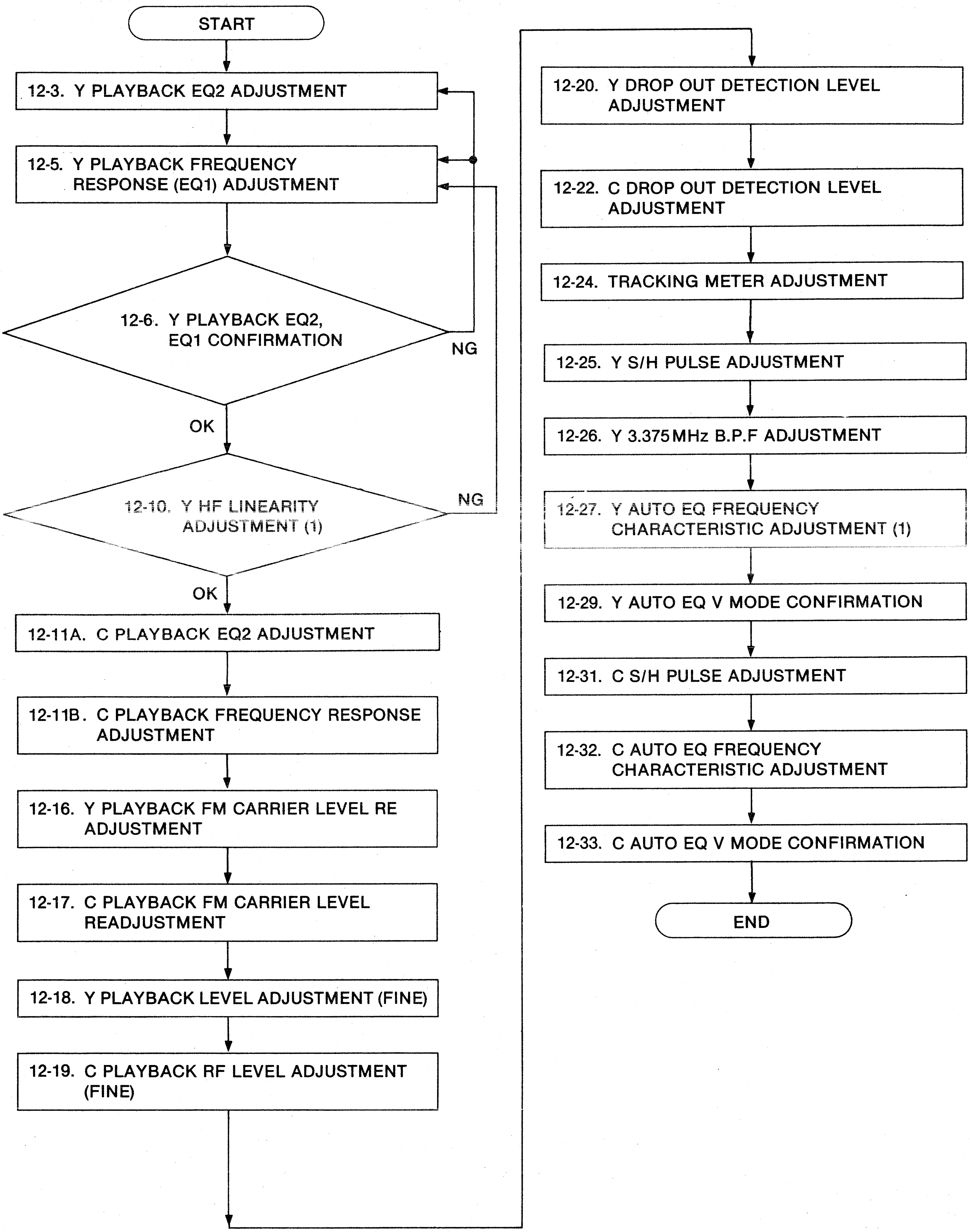
START
12-3. Y PLAYBACK EQ2 ADJUSTMENT
12-5. Y PLAYBACK FREQUENCY RESPONSE (EQ1) ADJUSTMENT
12-6. Y PLAYBACK EQ2, EQ1 CONFIRMATION
NG
OK
12-10. Y HF LINEARITY ADJUSTMENT (1)
NG
OK
12-11A. C PLAYBACK EQ2 ADJUSTMENT
12-11B. C PLAYBACK FREQUENCY RESPONSE ADJUSTMENT
12-16. Y PLAYBACK FM CARRIER LEVEL RE ADJUSTMENT
12-17. C PLAYBACK FM CARRIER LEVEL READJUSTMENT
12-18. Y PLAYBACK LEVEL ADJUSTMENT (FINE)
12-19. C PLAYBACK RF LEVEL ADJUSTMENT (FINE)
12-20. Y DROP OUT DETECTION LEVEL ADJUSTMENT
12-22. C DROP OUT DETECTION LEVEL ADJUSTMENT
12-24. TRACKING METER ADJUSTMENT
12-25. Y S/H PULSE ADJUSTMENT
12-26. Y 3.375MHz B.P.F ADJUSTMENT
12-27. Y AUTO EQ FREQUENCY CHARACTERISTIC ADJUSTMENT (1)
12-29. Y AUTO EQ V MODE CONFIRMATION
12-31. C S/H PULSE ADJUSTMENT
12-32. C AUTO EQ FREQUENCY CHARACTERISTIC ADJUSTMENT
12-33. C AUTO EQ V MODE CONFIRMATION
END

12. MODULATION & DEMODULATION (W3) BOARD (2/2)

12-1. Y SYNC TIP FREQUENCY ADJUSTMENT (FOR AU-65H / AU-65)

(W3 MOD & DEMOD)

TEST POINT	MODE	TAPE USED	M.EQ.	INPUT SIGNAL	ADJUSTMENT
TP309 TP316	E-E (EJECT)	-------	OSCILLOSCOPE	COMPONENT COLOUR BAR	VR9 (Y SYNC TIP FREQ.)

Step 1. 1. Inject Sinewave Signal to TP316 2. Set Sinewave Generator Output Frequency Setting To :	6.63 MHz ± 0.01 MHz (0.2 ~ 0.4Vp-p)
Step 2. 1. Adjust VR9 so that frequency beat noise is nullified at sync tip portion as shown in figure.	TP309 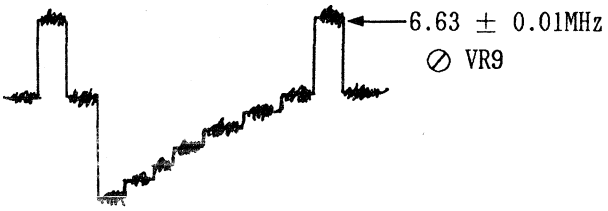

12-2. C BLANKING FREQUENCY ADJUSTMENT
(FOR AU-65H / AU-65)

(W3 MOD & DEMOD)

TEST POINT	MODE	TAPE USED	M.EQ.	INPUT SIGNAL	ADJUSTMENT
TP706 TP711	E-E (EJECT)	-------	OSCILLOSCOPE	Y/CTCM COLOUR BAR	VR206 (C BLK FREQ.)

Step 1. 1. Inject Sinewave Signal to TP711 2. Set Sinewave Generator Output Frequency Setting To :	5.4 MHz ± 0.01 MHz (0.2 ~0.4Vp-p)
Step 2. 1. SCOPE : TP706 2. Adjust VR206 so that frequency beat noise is nullified at cyan portion of Pr signal as shown in figure.	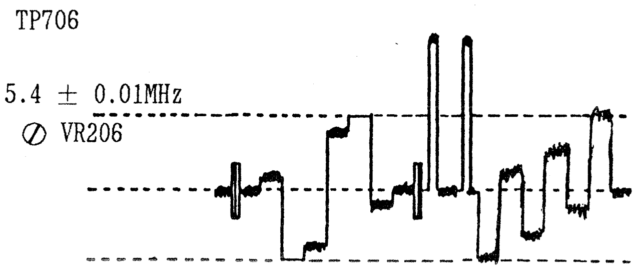

12-3. Y PLAYBACK EQ2 ADJUSTMENT
(FOR AU-62H/65H and AU-62/65)

(W3 MOD & DEMOD)

TEST POINT	MODE	TAPE USED	M.EQ.	INPUT SIGNAL	ADJUSTMENT
TP307 F28·AB TERMINAL (Trigger)	PLAY	ALIGNMENT TAPE 12MHz RF SWEEP	OSCILLOSCOPE	----------	VR315 (Y PB EQ2 R/P1) VR316 (Y PB EQ2 R/P2)

1. SW304 (on W3) : OFF 2. SCOPE CH1 : TP307 SCOPE CH2 : F28·AB TERMINAL (Trigger) 3. Adjust VR315 and VR316 (CH1 and CH2) RF signals For : 8MHz Level = 100% 12MHz Level = 40% ± 5% 4. SW304 (on W3) : ON	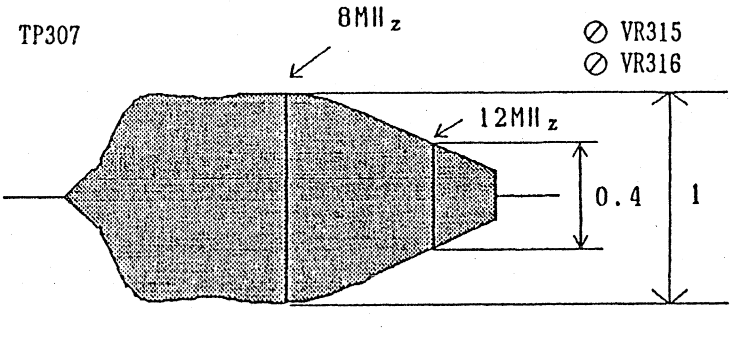 8MHz : 12MHz = 100 : 40 ± 5

12-4. Y PLAYBACK EQ2 ADJUSTMENT (FOR AU-63H / AU-63)

(W3 MOD & DEMOD)

TEST POINT	MODE	TAPE USED	M.EQ.	INPUT SIGNAL	ADJUSTMENT
TP307 F28·AB EDGE CONNECTOR (Trigger)	PLAY	ALIGNMENT TAPE 12MHz RF SWEEP	OSCILLOSCOPE	----------	VR313 (Y PB EQ2 AT1) VR314 (Y PB EQ2 AT2)

1. SW304 : OFF

2. SCOPE CH1 : TP307
   SCOPE CH2 : F28·AB (Trigger)

3. Adjust VR313 and VR314 (CH1 and CH2)
   RF signals For :
   8MHz Level = 100%
   12MHz Level = 40% ± 5%
4. SW304 : ON

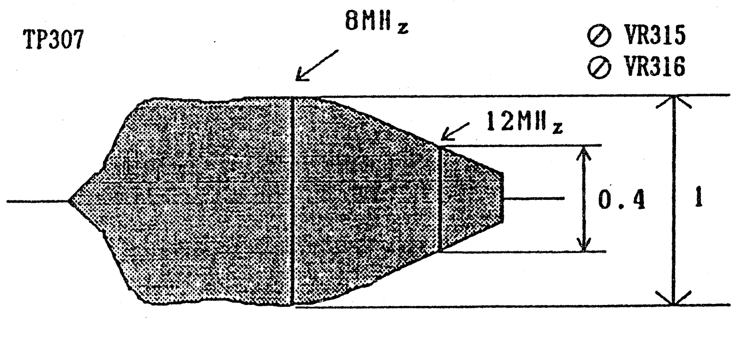

8MHz : 12MHz = 100 : 40 ± 5

12-5. Y PLAYBACK FREQUENCY RESPONSE (EQ1) ADJUSTMENT (FINE)

(W3 MOD & DEMOD)

TEST POINT	MODE	TAPE USED	M.EQ.	INPUT SIGNAL	ADJUSTMENT
COMPONENT Y OUT F28·AB TERMINAL (Trigger)	PLAY	ALIGNMENT TAPE SWEEP	WAVE FORM MONITOR (TEK 1751)	-------	VR302 (R/P CH2) VR304 (R/P CH1)

1. SW304 : ON

2. SCOPE CH1 : COMPONENT Y OUT
   SCOPE CH2 : F28·AB (Trigger)

3. Adjust VR302 and VR304 so that the
   frequency response becomes For :
   0.5MHz = 100%
   5.0MHz = 95% ± 5%

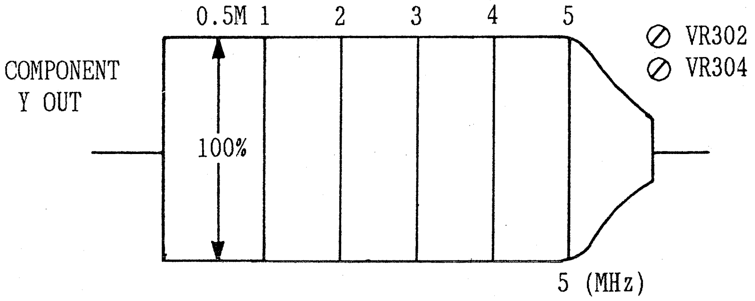

REFERENCE : 0.5MHz = 100%
SPEC : 5MHz = 95 ± 5%

12-6. Y PLAYBACK EQ2·EQ1 CONFIRMATION

(W3 MOD & DEMOD)

TEST POINT	MODE	TAPE USED	M.EQ.	INPUT SIGNAL	ADJUSTMENT
TP307 COMPONENT Y OUT F28·AB TERMINAL (Trigger)	PLAY	ALIGNMENT TAPE RF SWEEP & VIDEO SWEEP	WAVE FORM MONITOR (TEK1751) OR OSCILLOSCOPE	-------	------------

Step 1.

1. SW304 : OFF
2. SCOPE CH1 : TP307
   SCOPE CH2 : F28·AB (Trigger)
3. Play back the RF sweep portion of the Alignment Tape.
4. Confirm that the CH1 and CH2 RF signals becomes For :
   8MHz Level = 100%
   12MHz Level = 40%
5. If it is not, readjust VR315/316 (AU-65H/62H and AU-65/62), VR313/314 (AU-63H/63).
6. SW304 : ON

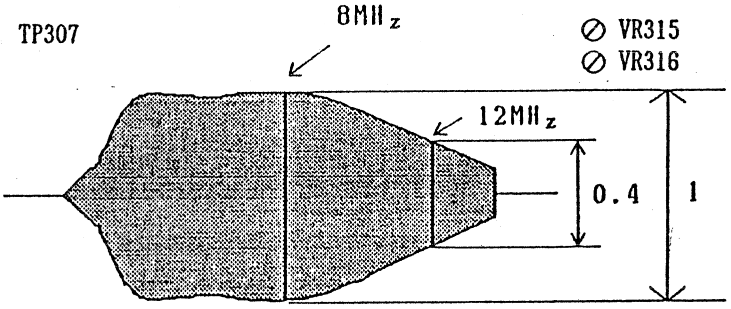

8MHz : 12MHz = 100 : 40

Step 2.

1. SW304 : ON
2. SCOPE CH1 : COMPONENT Y OUT
   SCOPE CH2 : F28·AB (Trigger)
3. Play back the Sweep portion of the Alignment Tape.
4. Confirm that the frequency response becomes For :
   0.5MHz = 100%
   5MHz = 95% ± 5%
5. If it is not, readjust VR302 and VR304.

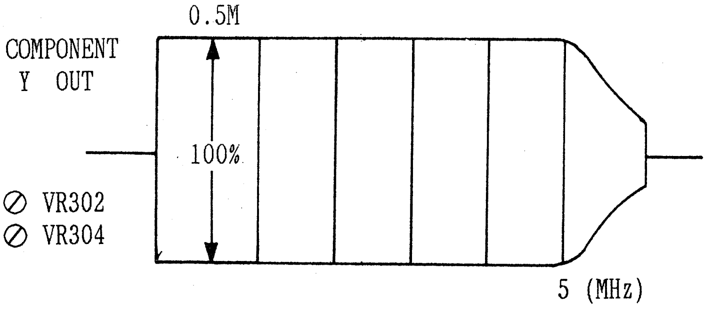

REFIRENCE : 0.5MHz = 100%
SPEC : 5MHz = 95 ± 5%

12-7. Y CH1 RECORDING CURRENT ADJUSTMENT (FOR AU-65H / AU-65)

(RA / HA BOARD)

TEST POINT	MODE	TAPE USED	M.EQ.	INPUT SIGNAL	ADJUSTMENT
TP3 (on RA/HA) TP201 (on RA/HA) F28·AB (on W3) (Trigger)	SELF REC/PLAY	BLANK TAPE	OSCILLOSCOPE	COMPONENT 50% WHITE	VC1 (Y CH1 REC EQ) (on RA/HA BOARD) VR3 (Y CH1 CURR) (on RA/HA BOARD)

Step 1.

1. VR3 : CENTRE
2. Place the unit in the recording mode.
3. SCOPE CH1 : TP3 (on RA/HA)
   SCOPE CH2 : F28·AB (Trigger) (on W3)
4. During the recording mode, turn VC1 and measure the maximum level and minimum level.
5. Adjust VC1 for the carrier level becomes middle level as shown.

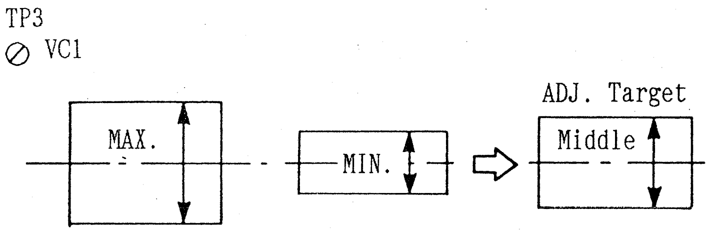

Step 2.

1. SCOPE CH1 : TP3 (on RA/HA)
   SCOPE CH2 : F28·AB (Trigger) (W3)
2. Place the unit in the recording mode.
3. Turn VR3 so that the FM Carrier level of 50% White portion becomes 630mVp-p, 780mVp-p and 940mVp-p record about 10 sec. for each level.
4. SCOPE : TP201 (on RA/HA)
5. Play back the just recorded portion.
6. Find the maximum playback level.
7. Set VR3 to maximum playback level point (630mVp-p, 780mVp-p or 940mVp-p) at TP3.

Note:
If the playback maximum level is all the same level (±1.5%), set VR3 to lower playback level point. (630mVp-p or 780mVp-p)

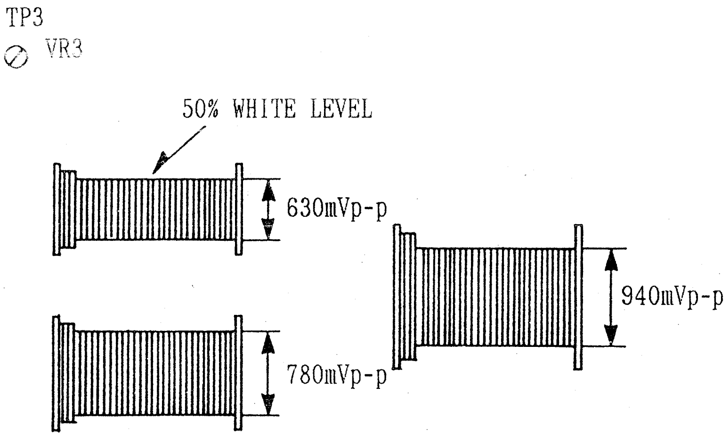

Note:
The reason we record 3 different levels is because the AU-65H/65 don't have a confidence head.

12-8. Y CH2 RECORDING CURRENT ADJUSTMENT (FOR AU-65H / AU-65)

(RA / HA BOARD)

TEST POINT	MODE	TAPE USED	M.EQ.	INPUT SIGNAL	ADJUSTMENT
TP4 (on RA/HA) TP202 (on RA/HA) F33·AB (on W3) (Trigger)	SELF REC/PLAY	BLANK TAPE	OSCILLOSCOPE	COMPONENT 50% WHITE	VC2 (Y CH2 REC EQ) (on RA/HA BOARD) VR4 (Y CH2 CURR) (on RA/HA BOARD)

Step 1.

1. VR4 : CENTRE
2. Place the unit in the recording mode.
3. SCOPE CH1 : TP4 (on RA/HA)
   SCOPE CH2 : F33·AB (Trigger) (on W3)
4. During the recording mode, turn VC2 and measure the maximum level and minimum level.
5. Adjust VC2 for the carrier level becomes middle level as shown.

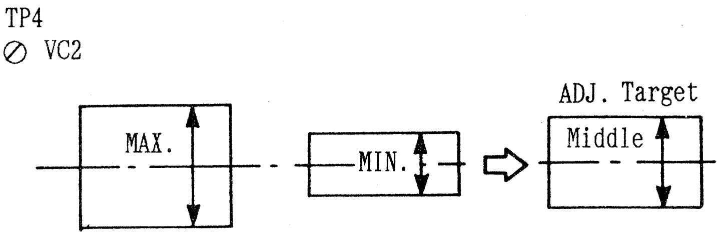

Step 2.

1. SCOPE CH1 : TP4 (on RA/HA)
   SCOPE CH2 : F33·AB (Trigger) (on W3)
2. Place the unit in the recording mode.
3. Turn VR4 so that the FM Carrier level of 50% White portion becomes 630mVp-p, 780mVp-p and 940mVp-p record about 10 sec. for each level.
4. SCOPE : TP202 (on RA/HA)
5. Play back the just recorded portion.
6. Find the maximum playback level.
7. Set VR4 to maximum playback level point (630mVp-p, 780mVp-p or 940mVp-p) at TP3.

Note:
If the playback maximum level is all the same level (±1.5%), set VR4 to lower playback level point. (630mVp-p or 780mVp-p)

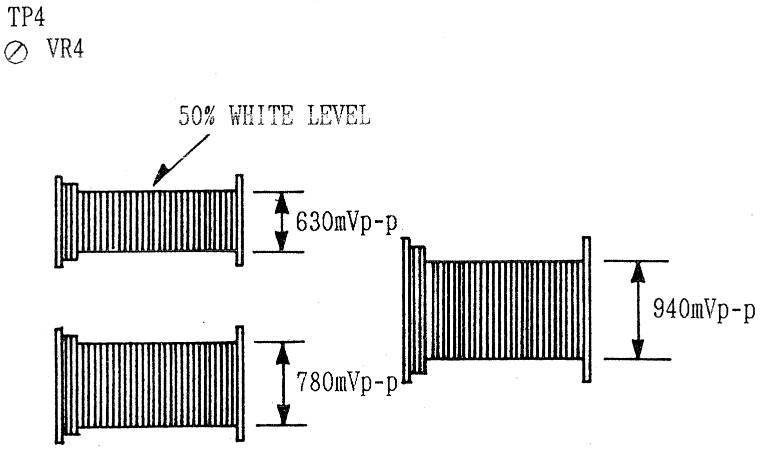

Note:
The reason we record 3 different levels is because the AU-65H/65 don't have a confidence head.

12-9. Y SELF RECORDING PLAYBACK FREQUENCY RESPONSE ADJUSTMENT (FOR AU-65H / AU-65)

(RA / HA BOARD)

TEST POINT	MODE	TAPE USED	M.EQ.	INPUT SIGNAL	ADJUSTMENT
COMPONENT Y OUT TP3 (on RA/HA) TP4 (on RA/HA)	SELF REC/PLAY	BLANK TAPE	OSCILLOSCOPE WAVEFORM MONITOR	COMPONENT 60% H. SWEEP	VC1, VR3 (CH1) (on RA/HA BOARD) VC2, VR4 (CH2) (on RA/HA BOARD)

Step 1.

1. Make a recording.
2. Then playback the just recorded portion.
3. WFM MONITOR : COMPONENT Y OUT
4. Confirm that the Y PB Frequency Response becomes For :
   0.5MHz = 100%
   5MHz = 95% ± 5%

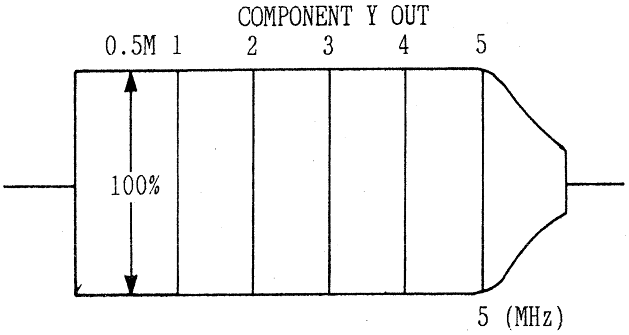

REF : 0.5MHz = 100%
SPEC : 5MHz = 95% ± 5%

Step 2.

If it is not within the specification, the following method is required.

FREQUENCY RESPONSE LEVEL IS TOO HIGH.

1) SCOPE : TP3 (Y CH1)
   TP4 (Y CH2)
2) Note the FM Carrier Level at TP3 (CH1) and TP4 (CH2) on RA/HA.
3) Turn VC1 (CH1) and VC2 (CH2) slightly to increase the FM Carrier Level at TP3 (CH1) and TP4 (CH2).
4) Adjust VR3 (CH1) and VR4 (CH2) so that the FM Carrier Level matches the noted FM Carrier Level in item 2.

FREQUENCY RESPONSE IS TOOL LOW.

1) SCOPE : TP3 (Y CH1)
   TP4 (Y CH2)
2) Note the FM Carrier Level at TP3 (CH1) and TP4 (CH2) on RA/HA.
3) Turn VC1 (CH1) and VC2 (CH2) slightly to decrease the FM Carrier Level at TP3 (CH1) and TP4 (CH2).
4) Adjust VR3 (CH1) and VR4 (CH2) so that the FM Carrier Level matches noted FM Carrier Level in item 2.

Step 3.

1. Finally confirm the Y Self Rec Frequency Response (Step1).

12-10. Y HF LINEARITY ADJUSTMENT (1)

(W3 MOD & DEMOD)

TEST POINT	MODE	TAPE USED	M.EQ.	INPUT SIGNAL	ADJUSTMENT
COMPONENT Y OUT	SELF REC/PLAY	BLANK TAPE	WFM/VECTOR MONITOR (TEK 1751)	COMPOSITE MODULATED RAMP SIGNAL	VR310 (EQ4)

Step 1.

WFM MONITOR CONDITION

1. MODE : WFM mode
2. FILTER : 4.43 CHROMA

Step 2.

1. WFM MONITOR : COMPONENT Y OUT
2. Record the Modulated-Ramp signal for few minutes through the component Y input and playback the just recorded portion.
3. Adjust VR310 so that the HF linearity becomes for :
   A = 100% B = 100 ± 15%
4. Confirm the Y PLAYBACK FREQUENCY RESPONSE (EQ1) ADJUSTMENT (FINE) (12-5).
5. If it is not, readjust Section 12-5 and 12-10.

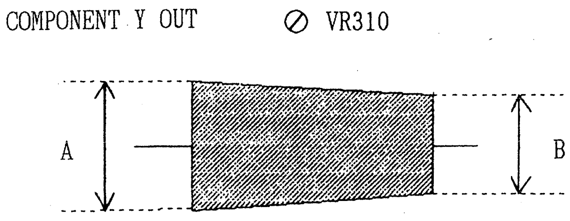

A : B = 100 : 100 ± 10

12-11(A). C PLAYBACK EQ2 ADJUSTMENT (FOR AU-65H/62H and AU-65/62)

(W3 MOD & DEMOD)

TEST POINT	MODE	TAPE USED	M.EQ.	INPUT SIGNAL	ADJUSTMENT
TP703 F28·AB EDGE CONNECTOR (Trigger)	PLAY	ALIGNMENT TAPE RF, SWEEP	OSCILLOSCOPE	----------	VR712 (C PB EQ2 R/P 1) VR713 (C PB EQ2 R/P 2)

1. SW704 : OFF
2. SCOPE CH1 : TP703
   SCOPE CH2 : F28 · AB (Trigger)
3. Adjust VR712 and VR713 (CH1 and CH2)
   RF signals For:
   6MHz Level = 100%
   10MHz Level = 40 ± 5%
4. SW704 : ON

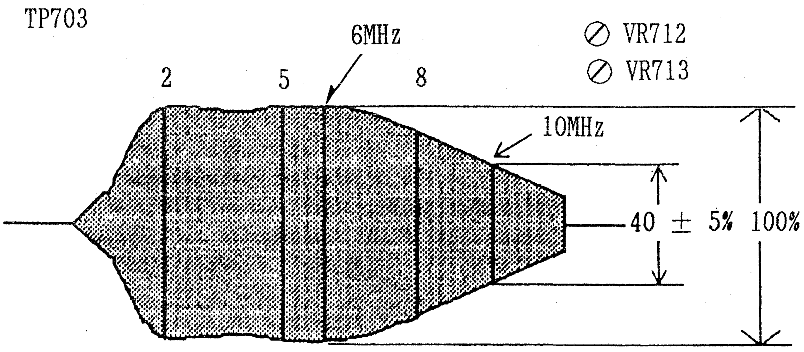

6MHz : 10MHz = 100% : 40 ± 5%

12-11(B). C PLAYBACK FREQUENCY RESPONSE ADJUSTMENT (FINE) (FOR AU-65H/62H and AU-65/62)

(W3 MOD & DEMOD)

TEST POINT	MODE	TAPE USED	M.EQ.	INPUT SIGNAL	ADJUSTMENT
COMPONENT Pr/Pb OUT F33·AB (Trigger)	PLAY	ALIGNMENT TAPE SWEEP	WAVEFORM MONITOR OR OSCILLOSCOPE	-------	VR727 (C TERM) VR712 (R/P 1) VR713 (R/P 2)

1. SCOPE CH1 : COMPONENT Pr/Pb OUT
   SCOPE CH2 : F33·AB (Trigger)
2. Adjust VR727 so that the frequency response of the channels average becomes for:
   0.25MHz = 100%
   1.5MHz = 95% ± 5%
3. If the frequency response is unbalance between CH1 and CH2, adjust VR712 and VR713 so that the frequency response correct betwen the two channels.

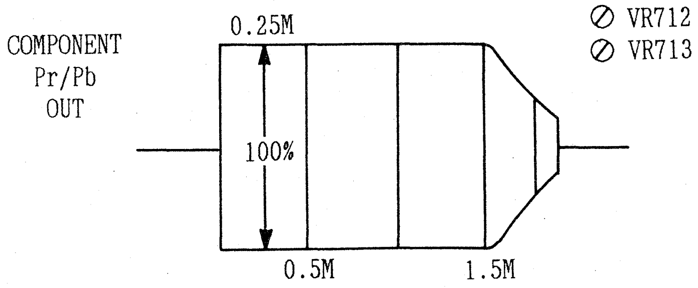

REF : 0.25MHz = 100%
SPEC : 1.5MHz = 95% ± 5%

12-12(A). C PLAYBACK EQ2 ADJUSTMENT (FOR AU-63H / AU-63)

(W3 MOD & DEMOD)

TEST POINT	MODE	TAPE USED	M.EQ.	INPUT SIGNAL	ADJUSTMENT
TP703 F28·AB EDGE CONNECTOR (Trigger)	PLAY	ALIGNMENT TAPE RF, SWEEP	OSCILLOSCOPE	----------	VR710 (C PB EQ2 AT1) VR711 (C PB EQ2 AT2)

1. SW704 : OFF
2. SCOPE CH1 : TP703
   SCOPE CH2 : F28 · AB (Trigger)
3. Adjust VR710 and VR711 (CH1 and CH2) RF signals For:
   6MHz Level = 100%
   10MHz Level = 40 ± 5%
4. SW704 : ON

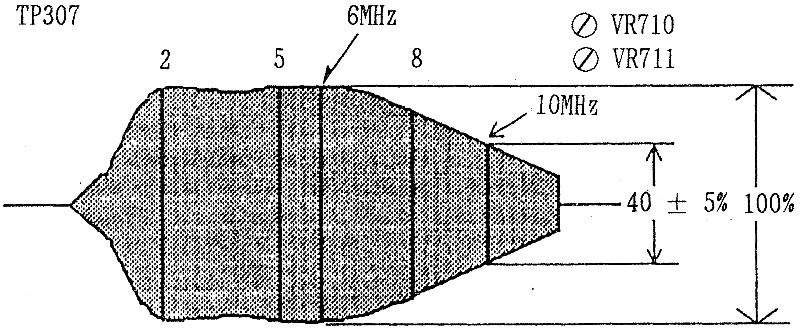

6MHz : 10MHz = 100% : 40 ± 5%

12-12(B). C PLAYBACK FREQUENCY RESPONSE ADJUSTMENT (FINE) (FOR AU-63H / AU-63)

(W3 MOD & DEMOD)

TEST POINT	MODE	TAPE USED	M.EQ.	INPUT SIGNAL	ADJUSTMENT
COMPONENT Pr/Pb OUT F33·AB (Trigger)	PLAY	ALIGNMENT TAPE SWEEP	WAVEFORM MONITOR (TEK 1751)	-------	VR727 (C TERM) VR710 (AT1) VR711 (AT1)

1. SCOPE CH1 : COMPONENT Pr/Pb OUT
   SCOPE CH2 : F33·AB (Trigger)
2. Adjust VR727 so that the frequency response of the channels average becomes for:
   0.25MHz = 100%
   1.5MHz = 95% ± 5%
3. If the frequency response is unbalance between CH1 and CH2, adjust VR710 and VR711 so that the frequency response correct between the two channels.

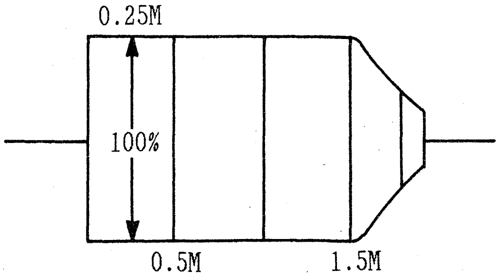

REF : 0.25MHz =100%
SPEC : 1.5MHz = 95% ± 5%

12-13. C CH1 RECORDING CURRENT ADJUSTMENT (FOR AU-65H / AU-65)

(RA / HA BOARD)

TEST POINT	MODE	TAPE USED	M.EQ.	INPUT SIGNAL	ADJUSTMENT
TP5 (on RA/HA) TP203 (on RA/HA)	SELF REC/PLAY	BLANK TAPE	OSCILLOSCOPE	COMPONENT 50% WHITE	VC3 (C CH1 REC EQ) (on RA/HA BOARD) VR5 (C CH1 CURR) (on RA/HA BOARD)

Step 1.

1. VR5 : CENTRE
2. Place the unit in the recording mode.
3. SCOPE : TP5 (on RA/HA)
4. During the recording mode, turn VC3 and measure the maximum level and minimum level.
5. Adjust VC3 for the carrier level becomes middle level as shown.

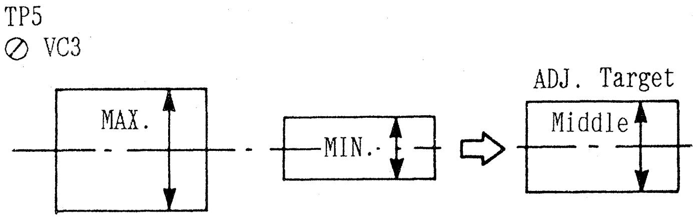

Step 2.

1. SCOPE : TP5 (on RA/HA)
2. Place the unit in the recording mode.
3. Turn VR5 so that the FM Carrier A level becomes 530mVp-p, 660mVp-p and 800mVp-p record about 10 sec. for each level.
4. SCOPE : TP203 (on RA/HA)
5. Play back the just recorded portion.
6. Find the maximum playback level.
7. Set VR5 to maximum playback level point (530mVp-p, 660mVp-p or 800mVp-p) at TP5.

Note:
If the playback maximum level is all the same level (±1.5%), set VR5 to lower playback level point.

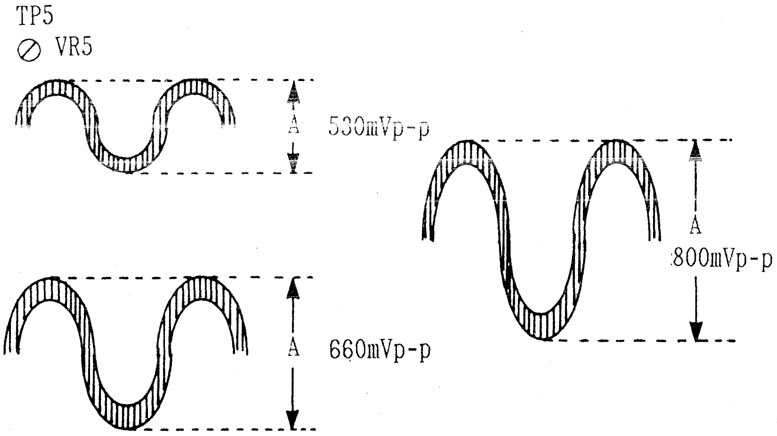

Note:
The reason we record 3 different levels is because the AU-65H/65 don't have a confidence head.

12-14. C CH2 RECORDING CURRENT ADJUSTMENT (FOR AU-65H / AU-65)

(RA / HA BOARD)

TEST POINT	MODE	TAPE USED	M.EQ.	INPUT SIGNAL	ADJUSTMENT
TP6 (on RA/HA) TP204 (on RA/HA)	SELF REC/PLAY	BLANK TAPE	OSCILLOSCOPE	COMPONENT 50% WHITE	VC4 (C CH2 REC EQ) (on RA/HA BOARD) VR6 (C CH2 CURR) (on RA/HA BOARD)

Step 1.

1. VR6 : CENTRE
2. Place the unit in the recording mode.
3. SCOPE : TP6 (on RA/HA)
4. During the recording mode, turn VC4 and measure the maximum level and minimum level.
5. Adjust VC4 for the carrier level becomes middle level as shown in figure.

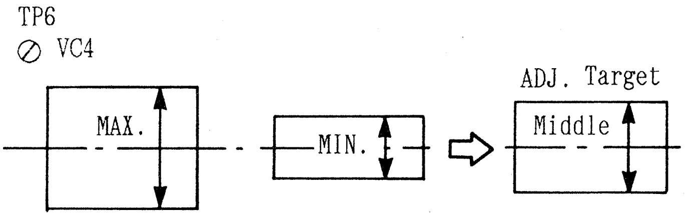

Step 2.

1. SCOPE : TP6 (on RA/HA)
2. Place the unit in the recording mode.
3. Turn VR6 so that the FM Carrier A level becomes 530mVp-p, 660mVp-p and 800mVp-p record about 10 sec. for each level.
4. SCOPE : TP204 (on RA/HA)
5. Play back the just recorded portion.
6. Find the maximum playback level.
7. Set VR6 to maximum playback level point (530mVp-p, 660mVp-p or 800mVp-p) at TP6.

Note:
If the playback maximum level is all the same level (±1.5%), set VR6 to lower playback level point.

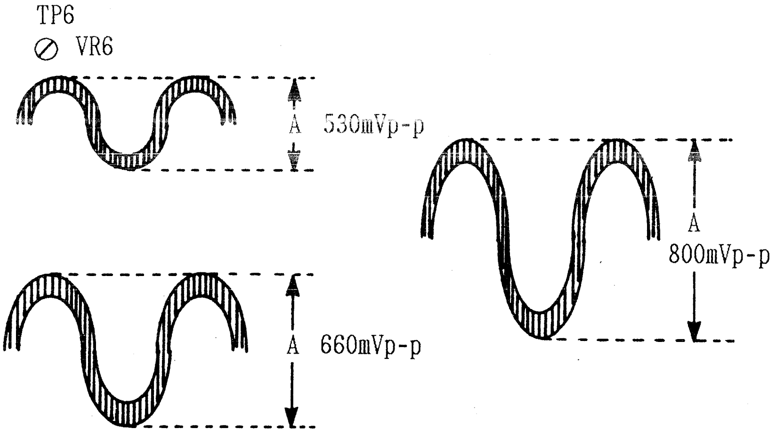

Note:
The reason we record 3 different levels is because the AU-65H/65 don't have a confidence head.

12-15. C SELF RECORDING PLAYBACK FREQUENCY RESPONSE ADJUSTMENT (FOR AU-65H / AU-65)

(RA / HA BOARD)

TEST POINT	MODE	TAPE USED	M.EQ.	INPUT SIGNAL	ADJUSTMENT
COMPONENT Pr/Pb OUT TP5 (on RA/HA) TP6 (on RA/HA)	SELF REC/PLAY	BLANK	OSCILLOSCOPE WAVEFORM MONITOR	COMPONENT 60% H. SWEEP	VC3, VR5 (CH1) (on RA/HA BOARD) VC4, VR6 (CH2) (on RA/HA BOARD)

Step 1.

1. Make a recording for a few minutes.
2. Then playback the just recorded portion.
3. WFM MONITOR : COMPONENT Pr OUT
   COMPONENT Pb OUT
4. Confirm that the C PB Frequency Response becomes for :
   0.25MHz = 100%
   1.5MHz = 95% ± 5%

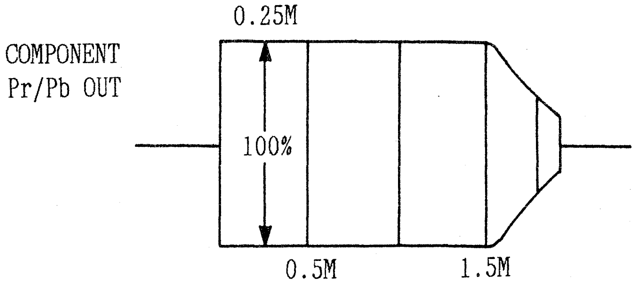

REF : 0.25MHz = 100%
SPEC : 1.5MHz = 95% ± 5%

Step 2.

If it is not within the specification, the following method is required.

* FREQUENCY RESPONSE LEVEL IS TOO HIGH AT 1.5MHz PORTION.

1) SCOPE : TP5 (C CH1)
   TP6 (C CH2)
2) Note the FM Carrier Level at TP5 (CH1) and TP6 (CH2).
3) Turn VC3 (CH1) and VC4 (CH2) slightly to increase the FM Carrier Level at TP5 (CH1) and TP6 (CH2).
4) Adjust VR5 (CH1) and VR6 (CH2) so that the FM Carrier Level matches the noted FM Carrier Level in item 2.

* FREQUENCY RESPONSE IS TOO LOW AT 1.5MHz PORTION.

1) SCOPE : TP5 (C CH1)
   TP6 (C CH2)
2) Note the FM Carrier Level at TP5 (CH1) and TP6 (CH2).
3) Turn VC3 (CH1) and VC4 (CH2) slightly to decrease the FM Carrier Level at TP5 (CH1) and TP6 (CH2).
4) Adjust VR5 (CH1) and VR6 (CH2) so that the FM Carrier Level matches the noted FM Carrier Level in item 2.

12-16. Y PLAYBACK FM CARRIER LEVEL READJUSTMENT

(W3 MOD & DEMOD)

TEST POINT	MODE	TAPE USED	M.EQ.	INPUT SIGNAL	ADJUSTMENT
TP301 F29·AB (Trigger)	PLAY	ALIGNMENT TAPE COLOUR BAR	OSCILLOSCOPE	-------	VR301 <R/P (AT) CH2 LEV> VR303 <R/P (AT) CH1 LEV>

1. SCOPE CH1 : TP301
   SCOPE CH2 : F29·AB EDGE CONNECTOR (on W3) For Trigger
2. Adjust VR301 and VR303 so that the signal level at TP301 is 400 ± 20mVp-p.

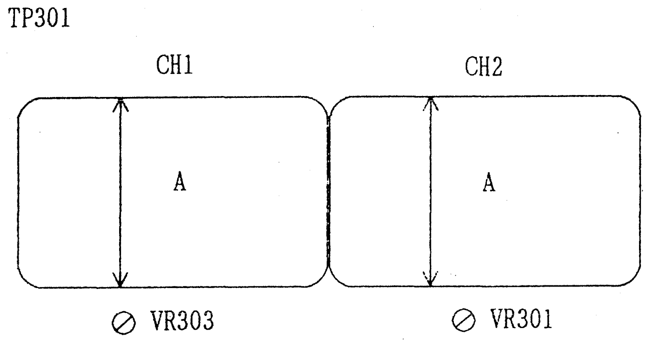

A = 400 ± 20mVp-p

12-17. C PLAYBACK FM CARRIER LEVEL READJUSTMENT

(W3: MOD & DEMOD)

TEST POINT	MODE	TAPE USED	M.EQ.	INPUT SIGNAL	ADJUSTMENT
TP701 F33·AB (Trigger)	PLAY	ALIGNMENT TAPE COLOUR BAR	OSCILLOSCOPE	-------	VR701 (R/P CH2 LEV) VR702 (R/P CH1 LEV)

1. SCOPE CH1 : TP701
   SCOPE CH2 : F33·AB EDGE CONNECTOR (on W3) For Trigger
2. Adjust VR701 and VR702 so that the signal level at TP701 is 400 ± 20mVp-p.

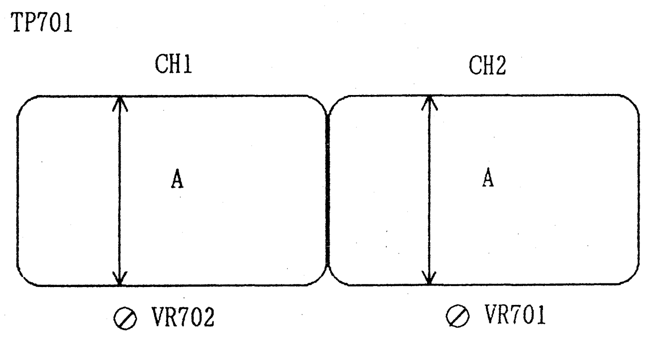

A = 400 ± 20mVp-p

12-18. Y PLAYBACK RF LEVEL ADJUSTMENT (FINE)

(W3 MOD & DEMOD)

TEST POINT	MODE	TAPE USED	M.EQ.	INPUT SIGNAL	ADJUSTMENT
TP307	PLAY	ALIGNMENT TAPE COLOUR BAR	OSCILLOSCOPE	-------	VR317 (LIM RF LEV)

Step 1. MACHINE CONDITION	SW304 → OFF
Step 2. Adjust VR317 so that the RF level at TP307 is 300 ± 20mVp-p.	⊘ VR317 TP307 : 300 ± 20mVp-p
Step 3. SW304 → ON	

12-19. C PLAYBACK RF LEVEL ADJUSTMENT (FINE)

(W3 MOD & DEMOD)

TEST POINT	MODE	TAPE USED	M.EQ.	INPUT SIGNAL	ADJUSTMENT
TP703	PLAY	ALIGNMENT TAPE COLOUR BAR	OSCILLOSCOPE	-------	VR714 (LIM IN RF LEV)

Step 1. MACHINE CONDITION	SW704 → OFF
Step 2. Adjust VR714 so that the signal level at TP703 is 300 ± 20mVp-p.	⊘ VR714 TP703 : 300 ± 20mVp-p
Step 3. SW704 → OFF Note: The Chroma Super Limiter Function is not used at this time.	

12-20. Y DROP OUT DETECTION LEVEL ADJUSTMENT (FOR AU-65H/62H and AU-65/62)

(W3 MOD & DEMOD)

TEST POINT	MODE	TAPE USED	M.EQ.	INPUT SIGNAL	ADJUSTMENT
TP307 TP315	JOG (STILL)	ALIGNMENT TAPE COLOUR BAR	OSCILLOSCOPE	-------	VR320 (D.O. DET)

Step 1. MACHINE CONDITION	SW304 → OFF MODE : JOG (STOP) in the Colour Bar portion.
Step 2. 1. Place the unit in the JOG STILL mode.	
Step 3. 1. SCOPE CH1 : TP307 SCOPE CH2 : TP315 2. Adjust VR320 so that the DO pulses appear when level A is 50 ± 5mVp-p at TP307. 3. Finally reset SW304 to "ON".	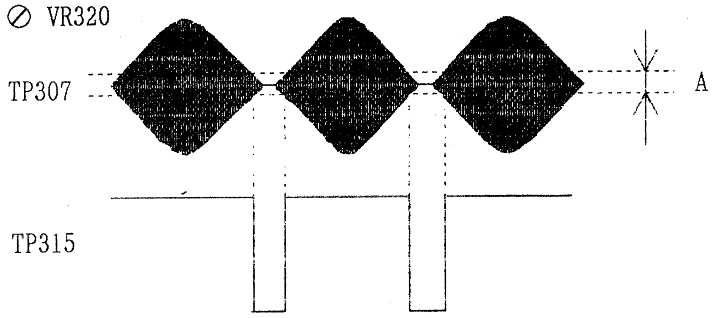 A = 50 ± 5mVp-p

12-21. Y DROP OUT DETECTION LEVEL ADJUSTMENT (FOR AU-63H / AU-63)

(W3 MOD & DEMOD)

TEST POINT	MODE	TAPE USED	M.EQ.	INPUT SIGNAL	ADJUSTMENT
TP307 TP315	PLAY	ALIGNMENT TAPE COLOUR BAR	OSCILLOSCOPE	-------	VR317 (LIM IN RF LEV) VR320 (D.O. DET)

Step 1. MACHINE CONDITION	SW304 → OFF
Step 2. 1. SCOPE : TP307 2. Adjust VR317 so that the RF level (A) becomes 50 ± 5mVp-p as shown in figure.	⊘ VR317 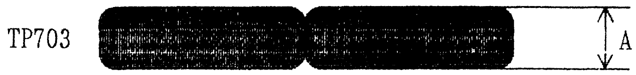 A = 50 ± 5mVp-p
Step 3. 1. SCOPE SETTING : 1) Set GND LEVEL 2) Set AC Mode 2. SCOPE : TP315 3. Adjust VR320 so that level (A) equals level (B). 4. After that adjust VR317 so that the RF level becomes 300 ± 20mVp-p at TP307. 5. SW304 → ON	⊘ VR320 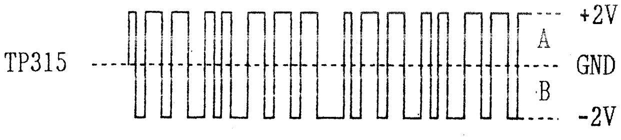 A = B

12-22. C DROP OUT DETECTION LEVEL ADJUSTMENT (FOR AU-65H/62H and AU-65/62)

(W3 MOD & DEMOD)

TEST POINT	MODE	TAPE USED	M.EQ.	INPUT SIGNAL	ADJUSTMENT
TP703 TP705	JOG (STILL)	ALIGNMENT TAPE COLOUR BAR	OSCILLOSCOPE	-------	VR717 (D.O. DET)

Step 1. MACHINE CONDITION	SW704 → OFF MODE : JOG (STOP) at Colour Bar portion.
Step 2. 1. Place the unit in the JOG STILL mode.	
Step 3. 1. SCOPE CH1 : TP703 SCOPE CH2 : TP705 2. Adjust VR717 so that the DO pulses are appeared when level A of TP703 is 50 ± 5mVp-p. 3. SW704 : ON	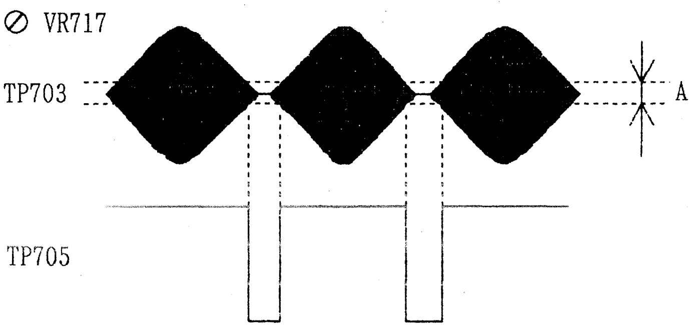 A = 50 ± 5mVp-p

12-23. C DROP OUT DETECTION LEVEL ADJUSTMENT (FOR AU-63H / AU-63)

(W3 MOD & DEMOD)

TEST POINT	MODE	TAPE USED	M.EQ.	INPUT SIGNAL	ADJUSTMENT
TP703 TP705	PLAY	ALIGNMENT TAPE COLOUR BAR	OSCILLOSCOPE	-------	VR714 (LIM IN RF LEV) VR717 (D.O. DET)

Step 1. MACHINE CONDITION	SW704 → OFF
Step 2. 1. SCOPE : TP703 2. Adjust VR714 so that the RF level (A) becomes 50 ± 5mVp-p as shown in figure.	⊘ VR714 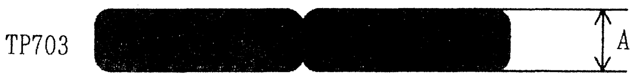 A = 50 ± 5mVp-p
Step 3. 1. SCOPE SETTING : AC Mode 2. SCOPE : TP705 3. Adjust VR717 so that (A) level equals (B) level. 4. After that adjust VR714 so that the RF level becomes 300 ± 20mVp-p at TP703.	⊘ VR717 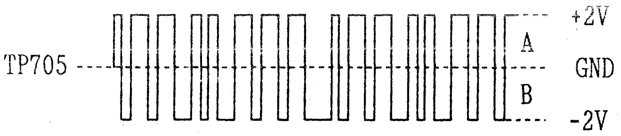
Step 4. SW704 : ON	

12-24. TRACKING METER ADJUSTMENT

(W3 MOD & DEMOD)

TEST POINT	MODE	TAPE USED	M.EQ.	INPUT SIGNAL	ADJUSTMENT
TRACKING METER	PLAY	ALIGNMENT COLOUR BAR	--------	-------	VR312

1. Adjust VR312 so that the TRACKING METER indicates 100% point.

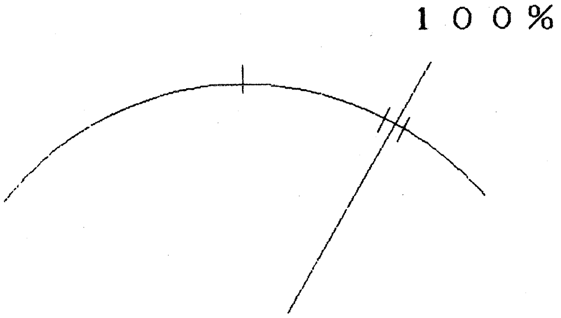

12-25. Y S/H PULSE ADJUSTMENT

(W3 MOD & DEMOD)

TEST POINT	MODE	TAPE USED	M.EQ.	INPUT SIGNAL	ADJUSTMENT
TP312 TP313	PLAY	ALIGNMENT SWEEP	OSCILLOSCOPE	-------	VR331 (S/H POS)

1. Adjust VR311 as shown in figure.

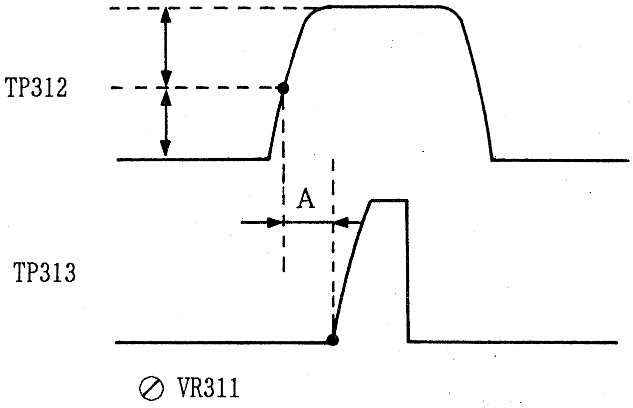

A = 0.8 ± 0.1 μsec.

12-26. Y 3.375MHz B.P.F ADJUSTMENT

(W3 MOD & DEMOD)

TEST POINT	MODE	TAPE USED	M.EQ.	INPUT SIGNAL	ADJUSTMENT
TP312	PLAY	ALIGNMENT SWEEP	OSCILLOSCOPE	-------	VL303 (VR326)

Step 1. 1. Connect the scope TP312 and set VR326 so that signal level at TP312 is minimum. 2. Adjust VL303 so that the signal peak is 3.375MHz.	

12-27. Y AUTO EQ FREQUENCY CHARACTERISTIC ADJUSTMENT (1) (FOR AU-65H/62H and AU-65/62)

(W3 MOD & DEMOD)

TEST POINT	MODE	TAPE USED	M.EQ.	INPUT SIGNAL	ADJUSTMENT
TP317 COMPONENT Y OUT	PLAY	ALIGNMENT SWEEP	OSCILLOSCOPE AND WAVE FORM MONITOR	-------	VR326 (A EQ PS) VR329 (A EQ R/P BAL)

Step 1. 1. Set the machine condition SW306 "ON" and SW305 "OFF" mode.	SW306 ―――→ ON (A EQ SW) SW305 ―――→ OFF (A EQ VAR)
Step 2. 1. Set the oscilloscope DC mode and playback alignment tape sweep portion. 2. Adjust VR329 and VR326 so that the channel DC difference is minimum (less than 0.5V) and centre level of DC difference is GND at TP317.	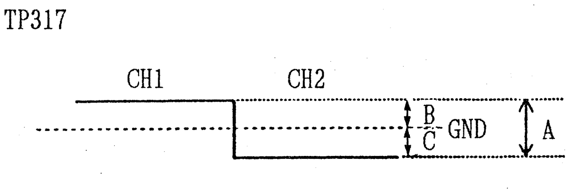 ⊘ VR329 A = MINIMUM ⊘ VR326 B = C
Step 3. 1. Confirm COMPONENT Y OUT waveform by waveform monitor so that the frequency characteristic is not change with SW306 "ON" and "OFF". 2. If it is not same frequency characteristic with SW306 "ON" and "OFF", readjust Step 2.	

Step 4. 1. After adjustment reset the SW305 and the SW306 user setting mode. Note: Initial setting in factory is SW305 and SW306 "OFF" mode.	SW305, SW306 → USER SETTING MODE

12-28. Y AUTO EQ FREQUENCY CHARACTERISTIC ADJUSTMENT (2) (FOR AU-63H / AU-63)

(W3 MOD & DEMOD)

TEST POINT	MODE	TAPE USED	M.EQ.	INPUT SIGNAL	ADJUSTMENT
TP317 COMPONENT Y OUT	PLAY	ALIGNMENT SWEEP	OSCILLOSCOPE AND WAVE FORM MONITOR	-------	VR326 (A EQ PS) VR330 (A EQ DT BAL)

Step 1. 1. Set the machine condition SW306 "ON" and SW305 "OFF" mode.	SW306 ————→ ON (A EQ SW) SW305 ————→ OFF (A EQ VAR)
Step 2. 1. Set the oscilloscope DC mode and playback alignment tape sweep portion. 2. Adjust VR330 and VR326 so that the channel DC difference is minimum (less than 0.5V) and centre level of DC difference is GND at TP317.	TP317 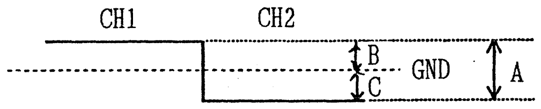 ⊘ VR330 A = MINIMUM ⊘ VR326 B = C
Step 3. 1. Confirm COMPONENT Y OUT waveform by waveform monitor so that the frequency characteristic is not change with SW306 "ON" and "OFF". 2. If it is not same frequency characteristic with SW306 "ON" and "OFF", readjust Step 2.	
Step 4. 1. After adjustment reset the SW305 and the SW306 user setting mode. Note: Initial setting in factory is SW305 and SW306 "OFF" mode.	SW305, SW306 → USER SETTING MODE

12-29. Y AUTO EQ V MODE CONFIRMATION

(W3 MOD & DEMOD)

TEST POINT	MODE	TAPE USED	M.EQ.	INPUT SIGNAL	ADJUSTMENT
COMPONENT Y OUT	PLAY	ALIGNMENT SWEEP	WAVEFORM MONITOR	-------	VR327 (A EQ V)

1. Set the machine condition SW306 and SW305 "ON" mode.
2. Confirm so that frequency characteristic is able to be changed by VR327.
3. After adjustment, reset the SW306 and SW305 user setting mode.

12-30. Y SELF RECODING AUTO EQ FREQUENCY CHARACTERISTIC COMFIRMATION (FOR AU-65H / AU-65)

(W3 MOD & DEMOD)

TEST POINT	MODE	TAPE USED	M.EQ.	INPUT SIGNAL	ADJUSTMENT
TP317 (on W3 P.C.Board) CONPONENT Y OUT	REC ↓ PLAY	BLANK TAPE	OSCILLOSCOPE AND WAVEFORM MONITOR	COMPONENT 60% SWEEP	VR503 (Y BU LEV.) (on W4 P.C.Board)

Step 1.

1. Set the machine condition SW306 "ON" and SW305 "OFF" mode.

SW306 -----→ ON
(A EQ SW)
SW305 -----→ OFF
(A EQ VAR)

Step 2.

1. Make a recording sweep signal.
2. Then playback the just recording portion.
3. Connect the scope to TP317 and confirm that DC level difference is less than 1V and centre point of the DC level difference is GND.

TP317

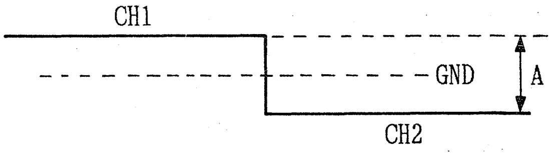

A = Less than 1V

Step 3. 1. Connect the waveform monitor to COMPONENT Y OUT and confirm that the frequency characteristic is same with SW306 "ON" and "OFF". 2. If it is not same frequency characteristic, adjust VR503 so that the selfrecording and playback frequency characteristic with SW306 "ON" and "OFF" is same.	
Step 4. 1. However if the frequency characteristic is unbalance between CH1 and CH2, adjust VR503 so that the frequency characteristic of two channels average with SW306 "ON" and with SW306 "OFF" are same. And adjust recording current without channels difference. 2. When Step 4 adjustment is done readjust recording frequency adjustment.	

12-31. C S/H PULSE ADJUSTMENT

(W3 MOD & DEMOD)

TEST POINT	MODE	TAPE USED	M.EQ.	INPUT SIGNAL	ADJUSTMENT
TP709 TP710	PLAY	ALIGNMENT SWEEP	OSCILLOSCOPE	-------	VR726 (S/H POS)

1. Adjust VR726 as shown in figure.

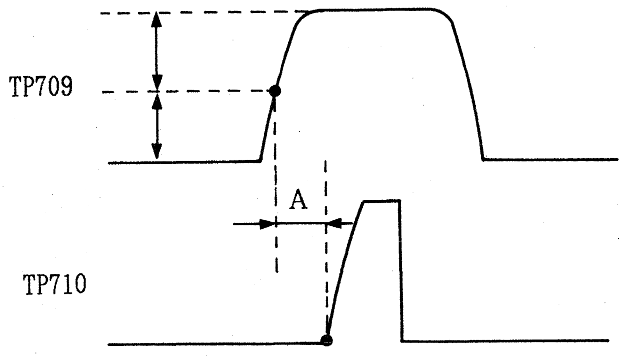

A = 0.5 ± 0.1μ sec.

12-32. C AUTO EQ FREQUENCY CHARACTERISTIC ADJUSTMENT

(W3 MOD & DEMOD)

TEST POINT	MODE	TAPE USED	M.EQ.	INPUT SIGNAL	ADJUSTMENT
TP712 COMPONENT Pb OUT	PLAY	ALIGNMENT SWEEP	OSCILLOSCOPE AND WAVEFORM MONITOR	-------	VR723 (A EQ PS) VR725 (A EQ BAL)

Step 1. 1. Set the machine condition SW306 "ON" and SW305 "OFF".	SW306 ————→ ON (A EQ SW) SW305 ————→ OFF (A EQ VAR)
Step 2. 1. Set the oscilloscope DC mode and playback alignment tape sweep portion. 2. Adjust VR725 and VR723 so that the channel DC difference is minimum (less than 0.5V) and centre level of DC difference is GND at TP721.	TP712 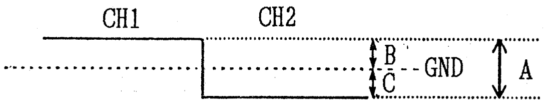 ⊘ VR725 A = MINIMUM ⊘ VR723 B = C
Step 3. 1. Confirm COMPONENT Pb OUT waveform by waveform monitor so that the frequency characteristic is not change with SW306 "ON" and "OFF". 2. If it is not same frequency characteristic with SW306 "ON" and "OFF", readjust Step 2.	
Step 4. 1. After adjustment reset the SW305 and the SW306 user setting mode. Note: Initial setting in factory is SW305 and SW306 "OFF".	SW305, SW306 → USER SETTING MODE

12-33. C AUTO EQ V MODE CONFIRMATION

(W3 MOD & DEMOD)

TEST POINT	MODE	TAPE USED	M.EQ.	INPUT SIGNAL	ADJUSTMENT
COMPONENT Pb OUT	PLAY	ALIGNMENT SWEEP	WAVEFORM MONITOR	-------	VR724 (A EQ V)

1. Set the machine condition SW306 and SW305 "ON" mode.
2. Confirm so that frequency characteristic is able to be change by VR724
3. After adjustment, reset the SW306 and SW305 user setting mode.

12-34. C SELF RECODING AUTO EQ FREQUENCY CHARACTERISTIC COMFIRMATION (FOR AU-65H / AU-65)

(W3 MOD & DEMOD)

TEST POINT	MODE	TAPE USED	M.EQ.	INPUT SIGNAL	ADJUSTMENT
TP712 (on W3 P.C.Board) CONPONENT Pb OUT	REC ↓ PLAY	BLANK TAPE	OSCILLOSCOPE AND WAVEFORM MONITOR	COMPONENT 60% SWEEP	VR504 (C BU LEV.) (on W4 P.C.Board)

Step 1. 1. Set the machine condition SW306 "ON" and SW305 "OFF" mode.	SW306 ——→ ON (A EQ SW) SW305 ——→ OFF (A EQ VAR)
Step 2. 1. Make a recording sweep signal. 2. Then playback the just recording portion. 3. Connect the scope to TP712 and confirm that DC level difference is less than 1V and centre point of the DC level difference is GND.	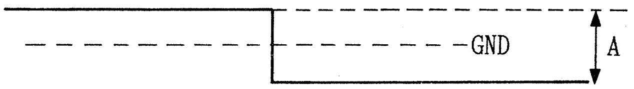 A = Less than 1V
Step 3. 1. Connect the waveform monitor to COMPONENT Pb OUT and confirm that the frequency characteristic is same with SW306 "ON" and "OFF". 2. If it is not same frequency characteristic, adjust VR504 so that the selfrecording and playback frequency characteristic with SW306 "ON" and "OFF" is same.	
Step 4. 1. However if the frequency characteristic is unbalance between CH1 and CH2, adjust VR504 so that the frequency characteristic of two channels average with SW306 "ON" and with SW306 "OFF" are same. And adjust recording current without channels difference. 2. When Step 4 adjustment is done readjust recording frequency adjustment.	
Step 5. 1. After adjustment reset the SW305 and the SW306 user setting mode. Note: Initial setting in factory is SW305 and SW306 "OFF".	SW305, SW306 → USER SETTING MODE

13. DECODER & CTCM (W4) BOARD (2/2)

DECODER & CTCM SECTION (2/2) (W4) FLOWCHART FOR AU-65H/AU-65

∗ BEFORE ADJUSTMENT
The adjustment with this comment is necessary to adjust after the following adjustments are completed.

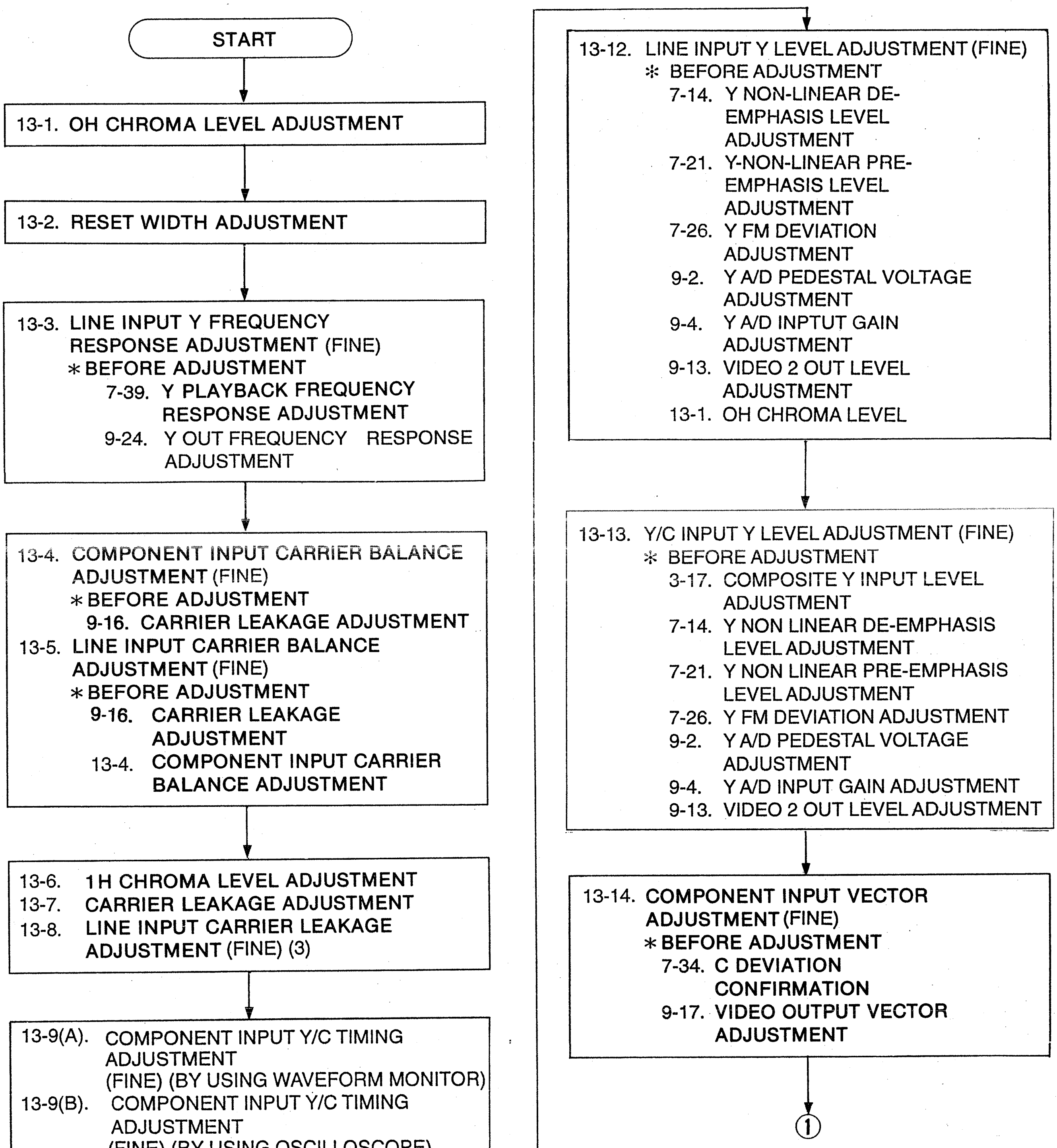

START

13-1. OH CHROMA LEVEL ADJUSTMENT

13-2. RESET WIDTH ADJUSTMENT

13-3. LINE INPUT Y FREQUENCY RESPONSE ADJUSTMENT (FINE)
∗ BEFORE ADJUSTMENT
7-39. Y PLAYBACK FREQUENCY RESPONSE ADJUSTMENT
9-24. Y OUT FREQUENCY RESPONSE ADJUSTMENT

13-4. COMPONENT INPUT CARRIER BALANCE ADJUSTMENT (FINE)
∗ BEFORE ADJUSTMENT
9-16. CARRIER LEAKAGE ADJUSTMENT
13-5. LINE INPUT CARRIER BALANCE ADJUSTMENT (FINE)
∗ BEFORE ADJUSTMENT
9-16. CARRIER LEAKAGE ADJUSTMENT
13-4. COMPONENT INPUT CARRIER BALANCE ADJUSTMENT

13-6. 1H CHROMA LEVEL ADJUSTMENT
13-7. CARRIER LEAKAGE ADJUSTMENT
13-8. LINE INPUT CARRIER LEAKAGE ADJUSTMENT (FINE) (3)

13-9(A). COMPONENT INPUT Y/C TIMING ADJUSTMENT (FINE) (BY USING WAVEFORM MONITOR)
13-9(B). COMPONENT INPUT Y/C TIMING ADJUSTMENT (FINE) (BY USING OSCILLOSCOPE)
13-10(A). LINE INPUT Y/C TIMING ADJUSTMENT (FINE) (BY USING WAVEFORM MONITOR)
13-10(B). LINE INPUT Y/C TIMING ADJUSTMENT (FINE) (BY USING OSCILLOSCOPE)
13-11. C SYNC POSITION ADJUSTMENT (FINE)

13-12. LINE INPUT Y LEVEL ADJUSTMENT (FINE)
∗ BEFORE ADJUSTMENT
7-14. Y NON-LINEAR DE-EMPHASIS LEVEL ADJUSTMENT
7-21. Y-NON-LINEAR PRE-EMPHASIS LEVEL ADJUSTMENT
7-26. Y FM DEVIATION ADJUSTMENT
9-2. Y A/D PEDESTAL VOLTAGE ADJUSTMENT
9-4. Y A/D INPTUT GAIN ADJUSTMENT
9-13. VIDEO 2 OUT LEVEL ADJUSTMENT
13-1. OH CHROMA LEVEL

13-13. Y/C INPUT Y LEVEL ADJUSTMENT (FINE)
∗ BEFORE ADJUSTMENT
3-17. COMPOSITE Y INPUT LEVEL ADJUSTMENT
7-14. Y NON LINEAR DE-EMPHASIS LEVEL ADJUSTMENT
7-21. Y NON LINEAR PRE-EMPHASIS LEVEL ADJUSTMENT
7-26. Y FM DEVIATION ADJUSTMENT
9-2. Y A/D PEDESTAL VOLTAGE ADJUSTMENT
9-4. Y A/D INPUT GAIN ADJUSTMENT
9-13. VIDEO 2 OUT LEVEL ADJUSTMENT

13-14. COMPONENT INPUT VECTOR ADJUSTMENT (FINE)
∗ BEFORE ADJUSTMENT
7-34. C DEVIATION CONFIRMATION
9-17. VIDEO OUTPUT VECTOR ADJUSTMENT

①

①

13-15. LINE INPUT VECTOR ADJUSTMENT (FINE)
∗ BEFORE ADJUSTMENT
7-34. C DEVIATION CONFIRAMATION
9-17. VIDEO OUTPUT VECTOR ADJUSTMENT
13-14.COMPONENT INPUT VECTOR ADJUSTMENT

13-16. Y/C INPUT VECTOR ADJUSTMENT (FINE)
∗ BEFORE ADJUSTMENT
7-34. C DEVIATION CONFIRMATION
9-17. VIDEO OUTPUT VECTOR ADJUSTMENT
13-14.COMPONENT INPUT VECTOR ADJUSTMENT
13-15.LINE INPUT VECTOR ADJUSTMENT

13-17. SCH ADJUSTMENT

13-18. VISC PHASE ADJUSTMENT
∗ BEFORE ADJUSTMENT
TBC & SYNC GEN (W1) and
ENCODER (W2)
ADJUSTMENTS SHOULD
BE COMPLETED.

13-19. 13.5MHz PLL ADJSUTMENT (1)
TBC & SYNC GEN (W1) and
ENCODER (W2)
ADJUSTMENTS SHOULD
BE COMPLETED.
13-20. 13.5MHz PLL ADJSUTMENT (2)
TBC & SYNC GEN (W1) and
ENCODER (W2)
ADJUSTMENTS SHOULD
BE COMPLETED.
13-21. 13.5MHz PLL ADJSUTMENT (3)
TBC & SYNC GEN (W1) and
ENCODER (W2)
ADJUSTMENTS SHOULD
BE COMPLETED.

END

13. DECODER & CTCM (W4) BOARD (2/2)

13-1. OH CHROMA LEVEL ADJUSTMENT (FOR AU-65H / AU-65)

(W4 DEC & CTCM)

TEST POINT	MODE	TAPE USED	M.EQ.	INPUT SIGNAL	ADJUSTMENT
TP3	E-E (EJECT)	-------	OSCILLOSCOPE	LINE INPUT 100% COLOUR BAR	VR1 (INPUT LEV.)

Step 1.

1. SCOPE : TP3
2. Adjust VR1 so that the level (A) is 1.14 ± 0.01Vp-p as shown in figure.

Note:
BAND WIDTH FILTER of SCOPE = 20MHz

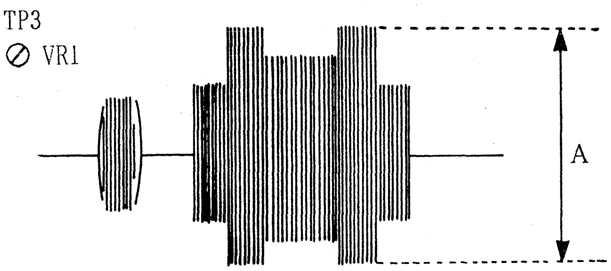

A = 1.14 ± 0.01Vp-p

13-2. RESET WIDTH ADJUSTMENT (FOR AU-65H / AU-65)

(W4 DEC & CTCM)

TEST POINT	MODE	TAPE USED	M.EQ.	INPUT SIGNAL	ADJUSTMENT
IC401 Pin 12	E-E (EJECT)	-------	OSCILLOSCOPE	LINE INPUT COLOUR BAR	VR403 (RSTW)

Step 1.

1. SCOPE : IC401
2. Adjust VR403 so that the pulse width (A) is 4.0 ± 0.05 μsec as shown in figure.

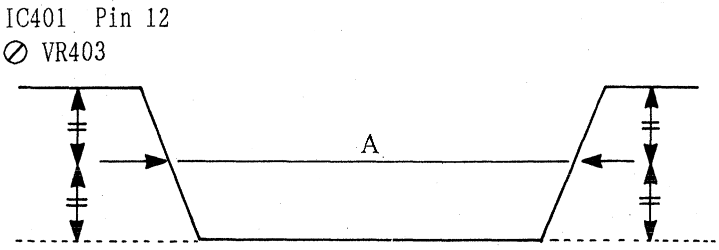

A = 4.0 ± 0.05μsec

13-3. LINE INPUT Y FREQUENCY RESPONSE ADJUSTMENT (FINE) (FOR AU-65H / AU-65)

(W4 DEC & CTCM)

TEST POINT	MODE	TAPE USED	M.EQ.	INPUT SIGNAL	ADJUSTMENT
VIDEO 2 OUT	E-E (EJECT)	-----	WAVEFORM MONITOR OR SCOPE	SWEEP (LINE INPUT)	VC201 (Y FREQ)

Step 1. MACHINE CONDITION	INPUT SELECT : LINE Connect a jumper wire between F15 and GND on W2 P.C.Board to out chroma signal.
Step 2. Note: The following adjustments should be completed before this adjustment. 1) 7-39 Y PLAYBACK FREQUENCY RESPONSE ADJ. (W3) 2) 9-24 Y OUT FREQUENCY RESPONSE ADJ. (W2)	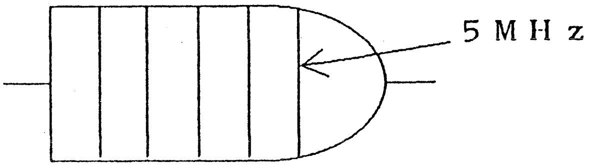 0.1 ~ 5MHz : FLAT (± 1.0dB)

13-4. COMPONENT INPUT CARRIER BALANCE ADJUSTMENT (FINE) (FOR AU-65H / AU-65)

(W4 DEC & CTCM)

TEST POINT	MODE	TAPE USED	M.EQ.	INPUT SIGNAL	ADJUSTMENT
COMPONENT Pr/Pb OUT	E-E (EJECT)	-----	OSCILLOSCOPE	COMPONENT COLOUR BAR	VR601 (Pb CLAMP REF) VR602 (Pr CLAMP REF)

Step 1. CARRIER LEAKAGE ADJ. (9-16) (W2) should be completed.	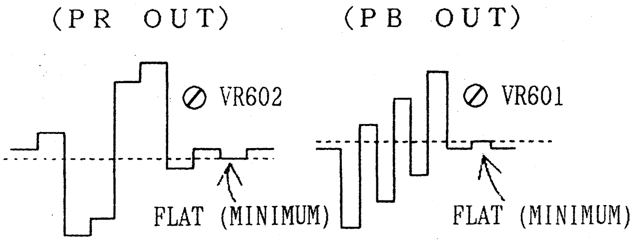 (PR OUT) (PB OUT) ⊘ VR602 ⊘ VR601 FLAT (MINIMUM) FLAT (MINIMUM)

13-5. LINE INPUT CARRIER BALANCE ADJUSTMENT (FINE)(FOR AU-65H / AU-65)

(W4 DEC & CTCM)

TEST POINT	MODE	TAPE USED	M.EQ.	INPUT SIGNAL	ADJUSTMENT
COMPONENT Pr/Pb OUT	E-E (EJECT)	-----	WAVEFORM MONITOR	LINE INPUT COLOUR BAR	VR216 (Pb BLK DC) VR217 (Pr BLK DC)

Step 1.

The following adjustments should be completed before this adjustment.

1) CARRIER LEAKAGE ADJ. (9-16) (W2)
2) COMPONENT INPUT CARRIER BALANCE ADJ. (13-4) (W4)

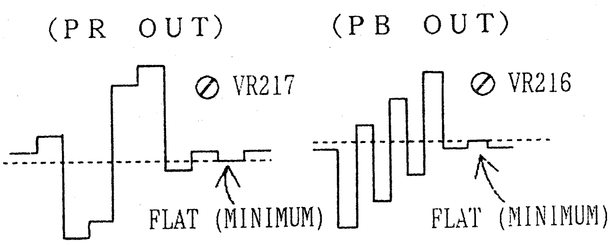

13-6. 1H CHROMA LEVEL ADJUSTMENT (FOR AU-65H / AU-65)

(W4 DEC & CTCM)

TEST POINT	MODE	TAPE USED	M.EQ.	INPUT SIGNAL	ADJUSTMENT
TP202	E-E (EJECT)	-----	OSCILLOSCOPE	LINE INPUT COLOUR BAR 100%	VR204 (C LEV.)

Step 1.

1. SCOPE CH1 : TP202

2. Adjust VR204 so that the level (A) is 1.4 ± 0.05Vp-p.

Note:
BAND WIDTH FILTER of SCOPE = 20MHz

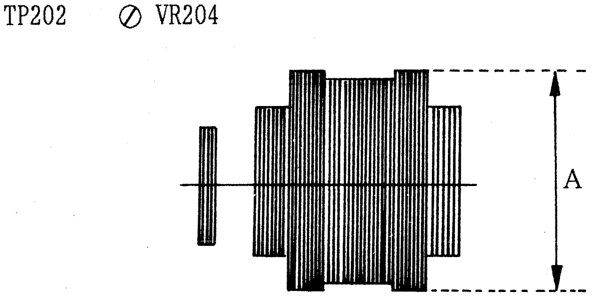

13-7. CARRIER LEAKAGE ADJUSTMENT (FOR AU-65H / AU-65)

(W4 DEC & CTCM)

TEST POINT	MODE	TAPE USED	M.EQ.	INPUT SIGNAL	ADJUSTMENT
COMPONENT Y OUT	E-E (EJECT)	-----	OSCILLOSCOPE	LINE INPUT COLOUR BAR	SW201 VR205 (C REJ.) VR202 (1H V TMG)

Step 1. MACHINE CONDITION (STD mode)	1. Set-up Menu No. 1011 → 00 FRONT SWITCH 2. Input signal is standard signal from signal generator.
Step 2. 1. SCOPE CH1 : COMPONENT Y OUT 2. SW201 : ADJ. side 3. Adjust VR205 and VR202 and nullify the carrier leakage. 4. SW201 : NORM side	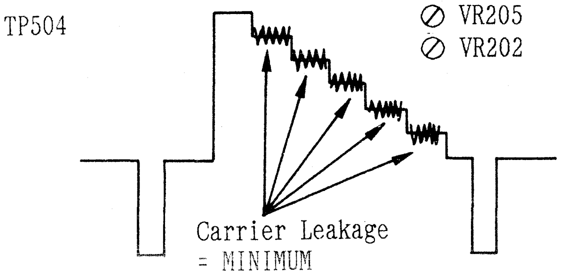

13-8. LINE INPUT CARRIER LEAKAGE ADJUSTMENT (FINE)(3)(FOR AU-65H / AU-65)

(W4 DEC & CTCM)

TEST POINT	MODE	TAPE USED	M.EQ.	INPUT SIGNAL	ADJUSTMENT
COMPONENT Y OUT TP201	E-E (EJECT)	-----	OSCILLOSCOPE	LINE IN COLUOUR BAR	SW201 VR203 (1H ADJ) VR205 (C REJ) VR202 (1HV TMG) VR10 (NSTD C LEV)

Step 1. MACHINE CONDITION (STD mode)	1. Set-up Menu No. 1011 → 00 FRONT SWITCH 2. Input signal is standard signal from signal generator.

Step 2.

1. SCOPE : COMPONENT Y OUT

2. SW201 : NORM side

- Adjust VR203 and VR205 so that the carrier leakage is minimized (Less than 10mVp-p).
- SCOPE : TP201
- Adjust VR202 so that the DC level is 0 ± 0.1Vp-p.

VR203, VR205, VR10

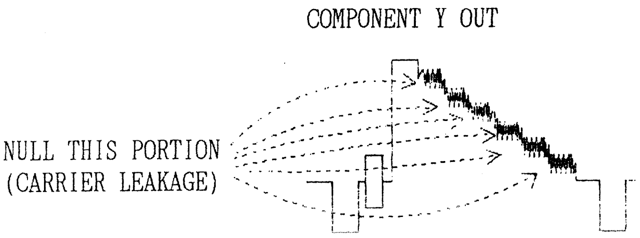

13-9(A). COMPONENT INPUT Y/C TIMING ADJUSTMENT (FINE)(BY USING WAVEFORM MONITOR) (FOR AU-65H / AU-65)

(W4 DEC & CTCM)

TEST POINT	MODE	TAPE USED	M.EQ.	INPUT SIGNAL	ADJUSTMENT
COMPONENT Y OUT Pb OUT Pr OUT	SELF REC/PLAY	BLANK TAPE	WAVEFORM MONITOR	COMPONENT PULSE & BAR (MOD. 20T)	VR505 (Y/C TMG)

Step 1.

1. WAVEFORM MONITOR CONDITION

RESPONSE : DIFFD STEP
VOLTS FULL SCALE : MAX (UNCAL)
DISPLAY : ×1 (5)
MAGNIFIER : ×50 (0.1)
TRIGGER : VIDEO OUT OF VTR

Step 2.

1. Make a recording, then play back the recorded portion.
2. WFM MONITOR

   CHA : COMPONENT Y OUT

   CHB : COMPONENT Pr (Pb) OUT

   EXT SYNC CH1 : VIDEO OUT
   CH2 : VIDEO OUT

3. COMPONENT OUTPUT CABLE LENGTH : Same Length
4. Observe the falling portion of Modulated 20T pulse signal.
5. Adjust the vertical and horizontal position of WFM Monitor so that the centre of falling edge is set to 0.3 axis as shown in figure.
6. Change the Input Select of WFM Monitor from A ch (COMPONENT Y OUT) to B ch (COMPONENT Pr OUT).
7. Measure the difference between Y and Pr (Pb) signal timing.
8. If it is not within ± 20nsec, readjust VR505 and repeat item 1 to 8 of Step 2.

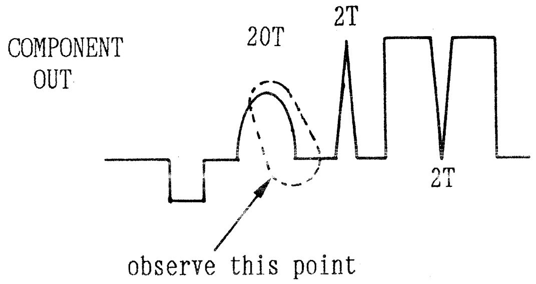

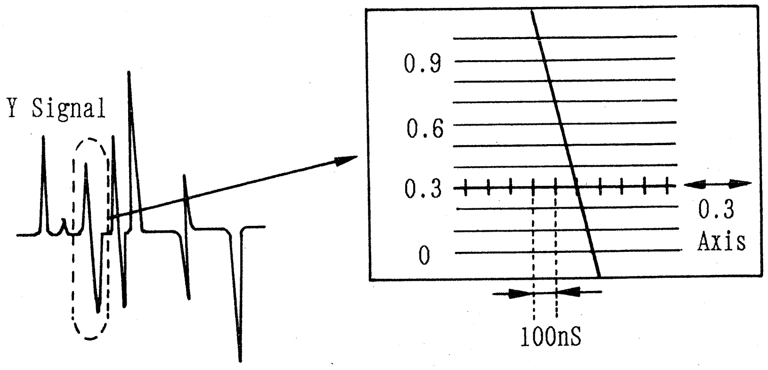

13-9(B). COMPONENT INPUT Y/C TIMING ADJUSTMENT (FINE)(BY USING OSCILLOSCOPE) (FOR AU-65H / AU-65)

(W4 DEC & CTCM)

TEST POINT	MODE	TAPE USED	M.EQ.	INPUT SIGNAL	ADJUSTMENT
COMPONENT Y OUT Pb OUT Pr OUT	SELF REC/PLAY	BLANK TAPE	OSCILLOSCOPE	COMPONENT COLOUR BAR	VR505 (Y/C TMG)

Step 1.

1. Make a recording.
2. Then play back the recorded portion.
3. SCOPE CH1 : COMPONENT Y OUT

   SCOPE CH2 : COMPONENT Pr (Pb) OUT

*Note:
COMPONENT OUTPUT CABLE LENGTH should be the Same Length.

4. Confirm that the Y/C Timing of component output is less than 20nsec.
5. If it is not, readjust VR505 and repeat from item 1 to 4.

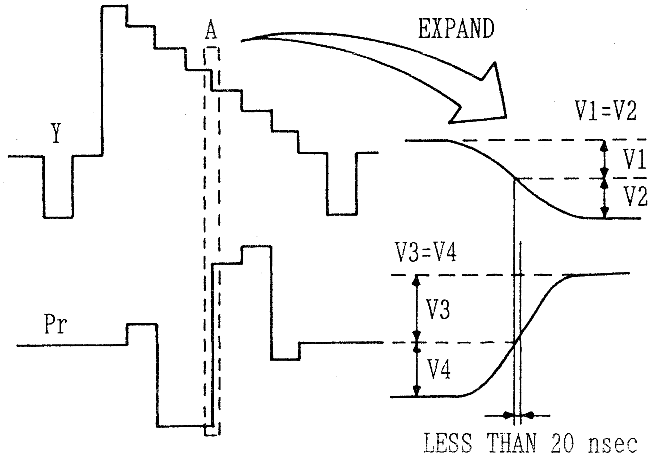
A
EXPAND
Y
V1=V2
V1
V2
V3=V4
V3
V4
Pr
LESS THAN 20 nsec

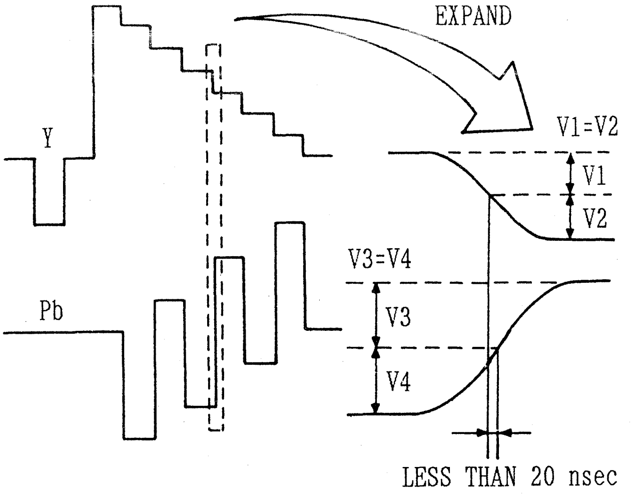
EXPAND
Y
V1=V2
V1
V2
V3=V4
V3
V4
Pb
LESS THAN 20 nsec

13-10(A). LINE INPUT Y/C TIMING ADJUSTMENT (FINE)
(BY USING WAVEFORM MONITOR)
(FOR AU-65H / AU-65)

(W4 DEC & CTCM)

TEST POINT	MODE	TAPE USED	M.EQ.	INPUT SIGNAL	ADJUSTMENT
COMPONENT Y OUT Pb OUT Pr OUT	SELF REC/PLAY	BLANK TAPE	WAVEFORM MONITOR	LINE IN Mod. 20T W/RAMP SIGNAL	VR214 (Pr TMG) VR212 (Pb TMG)

Step 1.

1. WAVEFORM MONITOR CONDITION

RESPONSE : DIFFD STEP
VOLTS FULL SCALE : MAX (UNCAL)
DISPLAY : ×1 (5)
MAGNIFIER : ×50 (0.1)
TRIGGER : VIDEO OUT OF VTR

Step 2.

1. Make a recording then, play back the just recorded portion.
2. WFM MONITOR

   CH A INPUT : COMPONENT Y OUT

   CH B INPUT : COMPONENT Pr (Pb) OUT

   EXT SYNC CH A : VIDEO OUT
   CH B : VIDEO OUT

3. Observe the falling portion of Modulated 12.5T pulse signal.
4. Adjust the vertical and horizontal position of WFM Monitor so that the centre of falling edge is set to 0.3 axis as shown in figure.
5. Change the Input Select of WFM Monitor from A ch (COMPONENT Y OUT) to B ch (COMPONENT Pr OUT).
6. Measure the difference between Y and Pr (Pb) signal timing.
7. If it is not within ± 20nsec, readjust VR214 (Pr) and VR212 (Pb) and repeat item 1 to 7 of STEP 2.

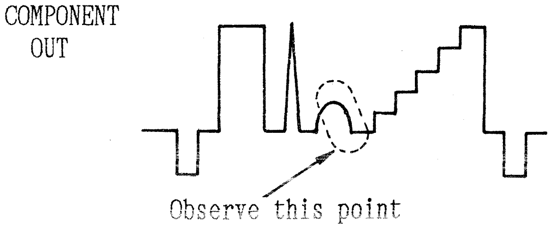

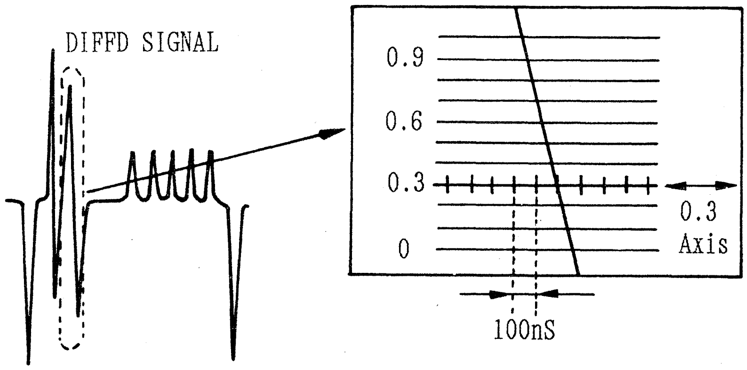

13-10(B). LINE INPUT Y/C TIMING ADJUSTMENT (FINE) (BY USING OSCILLOSCOPE) (FOR AU-65H / AU-65)

(W4 DEC & CTCM)

TEST POINT	MODE	TAPE USED	M.EQ.	INPUT SIGNAL	ADJUSTMENT
COMPONENT Y OUT Pb OUT Pr OUT	SELF REC/PLAY	BLANK TAPE	OSCILLOSCOPE	LINE IN COLOUR BAR	VR214 (Pr TMG) VR212 (Pb TMG)

Step 1.

1. Make a recording for a few minutes.
2. Play back the just recorded portion.
3. SCOPE CH1 : COMPONENT Y OUT

   SCOPE CH2 : COMPONENT Pr (Pb) OUT

*Note :
COMPONENT OUTPUT CABLE LENGTH should be the Same Length.

4. Confirm that the Y/C Timing of component output is less than 20nse.
5. If it is not, readjust VR214 (Pr), VR212 (Pb) and repeat from item 1 to 4.

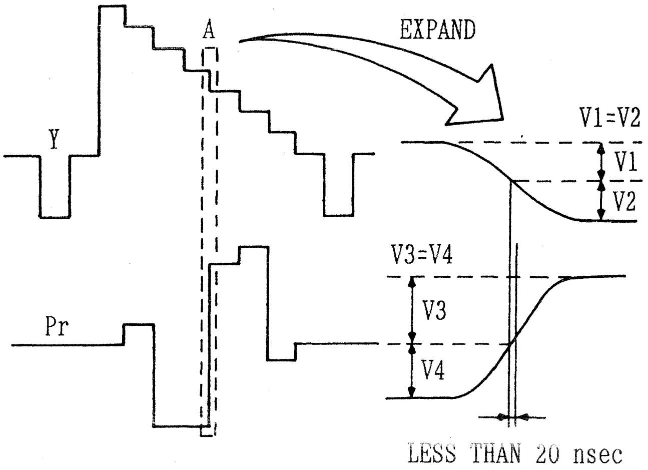
A
EXPAND
Y
Pr
V1=V2
V1
V2
V3=V4
V3
V4
LESS THAN 20 nsec

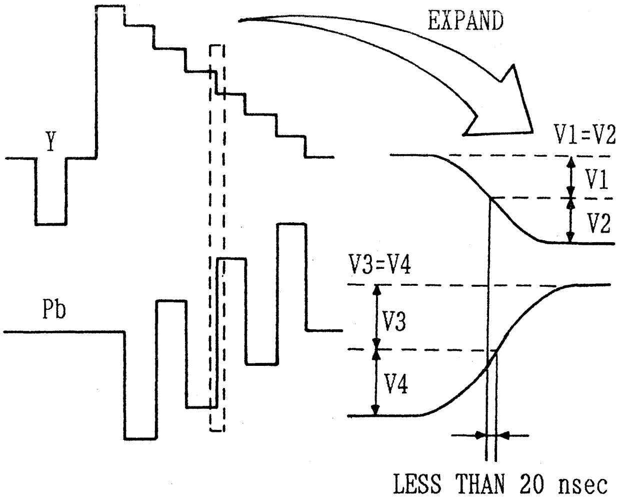
EXPAND
Y
Pb
V1=V2
V1
V2
V3=V4
V3
V4
LESS THAN 20 nsec

13-11. C SYNC POSITION ADJUSTMENT (FINE) (FOR AU-65H / AU-65)

(W4 DEC & CTCM)

TEST POINT	MODE	TAPE USED	M.EQ.	INPUT SIGNAL	ADJUSTMENT
TP601 TP704	E-E (EJECT)	------	OSCILLOSCOPE	COMPONENT COLOUR BAR	VR704 (C SY POS)

Step 1. MACHINE CONDITION (STD mode)	1. Set-up Menu No. 1011 → 00 FRONT SWITCH 2. Input signal is standard signal from signal generator.
Step 2. 1. SCOPE CH1 : TP601 SCOPE CH2 : TP704 2. Delay the scope at C Sync and Burst portion. 3. Adjust VR704 so that the B period is 18 cycles ± 5 nsec. Note: When the scope CH1 and CH2 is connected to TP601 and TP704 at the same time, a beat noise occurs the waveform. Please measure the period "A" separately.	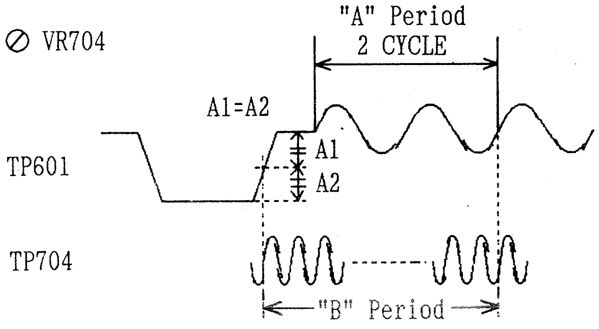 ⊘ VR704 "A" Period 2 CYCLE A1=A2 TP601 A1 A2 TP704 "B" Period "B" = 18 cycles ± 5 nsec

13-12. LINE INPUT Y LEVEL ADJUSTMENT (FINE) (FOR AU-65H / AU-65)

(W4 DEC & CTCM)

TEST POINT	MODE	TAPE USED	M.EQ.	INPUT SIGNAL	ADJUSTMENT
VIDEO 2 OUT	E-E (EJECT)	------	WAVEFORM MONITOR	LINE IN COLOUR BAR 100%	VR207 (Y LEV)

Step 1. MACHINE CONDITION	The following adjustments should be completed before this adjustment is done. Please confirm followings. 1) Y NON LINEAR DE-EMPHASIS LEVEL (7-14) 2) Y NON LINEAR PRE-EMPHASIS LEVEL (7-21) 3) Y FM DEVIATION (7-26) 4) Y A/D PEDESTAL VOLTAGE (9-2) 5) Y A/D INPUT GAIN (9-4) 6) VIDEO 2 OUT LEVEL (9-13) 7) OH CHROMA LEVEL (13-1)
Step 2. 1. VIDEO VR : Push In to PRESET POSITION 2. Adjust VR207 so that the Video Level (V) becomes 0.7V ± 0.007Vp-p.	⊘ VR206 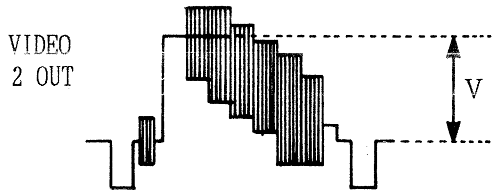 V = 0.7V

13-13. Y/C INPUT Y LEVEL ADJUSTMENT (FINE)
(FOR AU-65H / AU-65)

(W4 DEC & CTCM)

TEST POINT	MODE	TAPE USED	M.EQ.	INPUT SIGNAL	ADJUSTMENT
VIDEO 2 OUT	E-E (EJECT)	------	WAVEFORM MONITOR	Y/C IN COLOUR BAR 100%	VR206 (4P Y LEV)

Step 1.

MACHINE CONDITION

The following adjustments should be completed before this adjustment is done.
Please confirm them.

1) COMPOSITE Y INPUT LEVEL ADJUSTMENT (3-17)
2) Y NON LINEAR DE-EMPHASIS LEVEL (7-14)
3) Y NON LINEAR PRE-EMPHASIS LEVEL (7-21)
4) Y FM DEVIATION (7-26)
5) Y A/D PEDESTAL VOLTAGE (9-2)
6) Y A/D INPUT GAIN (9-4)
7) VIDEO 2 OUT LEVEL (9-13)

Step 2.

1. VIDEO VR : Push in to PRESET POSITION
2. Adjust VR206 so that the Video Level (V) becomes 0.7V (± 2%).

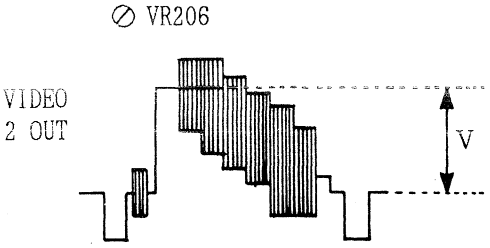

V = 0.7V (± 2%)

13-14. COMPONENT INPUT VECTOR ADJUSTMENT (FINE) (FOR AU-65H / AU-65)

(W4 DEC & CTCM)

TEST POINT	MODE	TAPE USED	M.EQ.	INPUT SIGNAL	ADJUSTMENT
VIDEO 2 OUT	E-E (EJECT)	------	VECTOR SCOPE	COMPONENT COLOUR BAR 100%	VR502 (Pb LEV 2)

Step 1. MACHINE CONDITION	The following adjustments should be completed before this adjustment is done. 1) C DEVIATION CONFIRMATION (7-34) 2) VIDEO OUTPUT VECTOR (9-17)
Step 2. 1. Connect the vector scope to signal generator, and set the vector scope the burst level 100%. 2. Reconnect the vector scope to VIDEO 2 OUT on the Rear Panel. 1. Adjust VR502 so that the each Vector is within its inner box on the Vector scope. (2%)	VIDEO 2 OUT ⊘ VR502 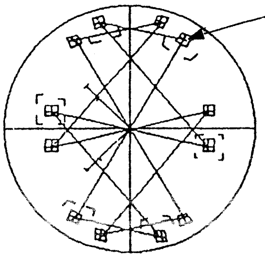 Inner Box Indicate 100%

13-15. LINE INPUT VECTOR ADJUSTMENT (FINE)
(FOR AU-65H / AU-65)

(W4 DEC & CTCM)

TEST POINT	MODE	TAPE USED	M.EQ.	INPUT SIGNAL	ADJUSTMENT
VIDEO 2 OUT COMPONENT Pb, Pr OUT	E-E (EJECT)	------	VECTOR SCOPE WAVEFORM MONITOR	LINE IN COLOUR BAR 100%	VR213 (Pb LEV 1) VR215 (Pr LEV 1) VR218 (AXIS PHASE) VC401

Step 1.

MACHINE CONDITION

1. The following adjustments should be completed before this adjustment is done.
   1) C DEVIATION CONFIRMATION (7-34)
   2) VIDEO OUTPUT VECTOR (9-17)
   3) COMPONENT INPUT VECTOR (13-14)
2. VIDEO VR : Push In to PRESET POSITION

Step 2.

1. Connect the waveform monitor to COMPONENT Pb and Pr OUT.
2. Adjust VR218 and VC401 so that the clouble portion of waveoform is minimum.

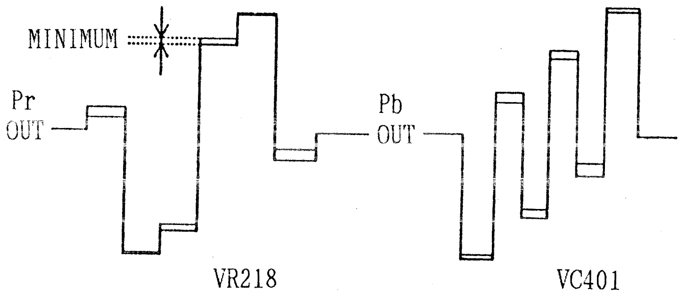

Step 3.

1. Connect the vector scope to signal generator, and set the vector scope the burst level 100%.
2. Reconnect the vector scope to VIDEO 2 OUT on the Rear Panel.
3. Adjust VR213 and VR215 so that the each Vector is within its inner box on the Vector Scope. (2%)

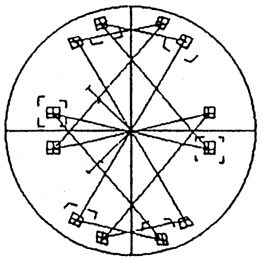

13-16. Y/C INPUT VECTOR ADJUSTMENT (FINE) (FOR AU-65H / AU-65)

(W4 DEC & CTCM)

TEST POINT	MODE	TAPE USED	M.EQ.	INPUT SIGNAL	ADJUSTMENT
VIDEO 2 OUT	E-E (EJECT)	------	VECTOR SCOPE	Y/C IN COLOUR BAR 100%	VR201 (4P C LEV)

Step 1. MACHINE CONDITION	1. The following adjustments should be completed before this adjustment is done. 1) C DEVIATION CONFIRMATION (7-34) 2) VIDEO OUTPUT VECTOR (9-17) 3) COMPONENT INPUT VECTOR (13-14) 4) LINE INPUT VECTOR (13-15) 2. INPUT SELECT : Y/C side (on Pull Out Drawer) 3. YC/COMPONENT SELECT : YC side (on Front Sub Panel)
Step 2. 1. Connect the vector scope to signal generator, and set the vector scope the burst level 100%. 2. Reconnect the vector scope to VIDEO 2 OUT on the Rear Panel. 3. Adjust VR201 so that the each vector is within its inner box on the vector scope. (2%)	VIDEO 2 OUT ⊘ VR201 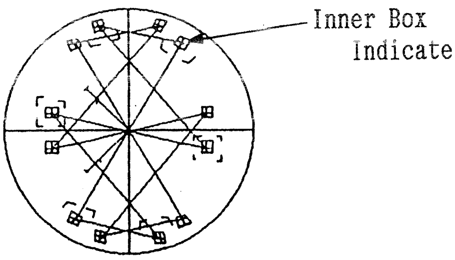

13-17. SCH ADJUSTMENT (FOR AU-65H / AU-65)

(W4 DEC & CTCM)

TEST POINT	MODE	TAPE USED	M.EQ.	INPUT SIGNAL	ADJUSTMENT
TP401 TP402	E-E (EJECT)	-------	SCH METER (TEK 1751) OSCILLOSCOPE	LINE IN COMPOSITE SIGNAL (SCH 0°)	VR401 (SCH -)

Step 1.

CONNECTION METHOD

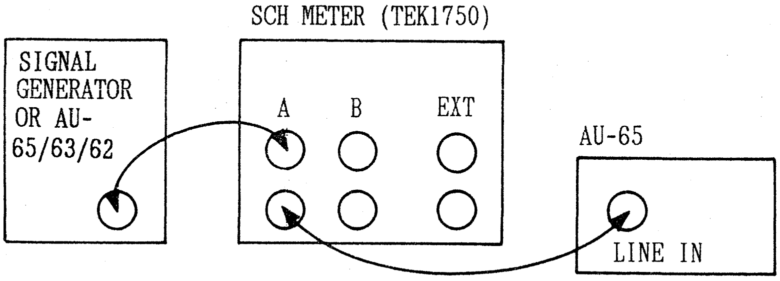
SCH METER (TEK1750)
SIGNAL GENERATOR OR AU-65/63/62
A
B
EXT
AU-65
LINE IN

Step 2.

1. STD/NSTD SELECT : STD
   (on Set Up Menu & Front Sub Panel)
2. SCH METER (METER 1751) : SCH Mode
3. Adjust SIGNAL GEN or another MII VTR so that the SCH phase becomes ± 0°.
4. Connect the oscilloscope to TP401 and TP402.
5. Adjust VR401 so that the (A) equal (B) as shown in figure.

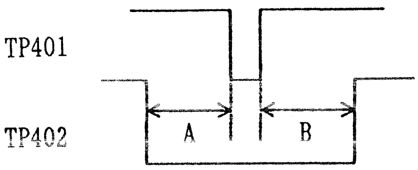
TP401
TP402
A
B

A = B ± 0.5 msec

13-18. VISC PHASE ADJUSTMENT (FOR AU-65H / AU-65)

(W4 DEC & CTCM)

TEST POINT	MODE	TAPE USED	M.EQ.	INPUT SIGNAL	ADJUSTMENT
VIDEO 2 OUT	E-E (EJECT)	------	SCH METER (VECTOR Mode)	LINE IN COLOUR BAR (with VIR Signal that have Pb axis SC)	VR11 (VSC ○)

Step 1. MACHINE CONDITION	1. TBC & SYNC GEN (W1) Adjustment should be completed. 2. ENCODER (W2) Adjustment should be completed. 3. SW7 (on W1) : OFF 4. STD/NSTD SELECT : STD (Set-up Menu No. 1011 → 00 FRONT SWITCH) (Input Signal is standard from signal generator)
Step 2. 1. VECTOR SCOPE : VIDEO 2 OUT 2. Confirm that the VISC signal phase is same as VIR (Pb axis Sub Carrier) signal phase as shwon in figure. (± 2°) 3. If it is not, readjust VR11 so that the each phase becomes same phase. 4. SW7 (on W1) : ON	⊘ VR11 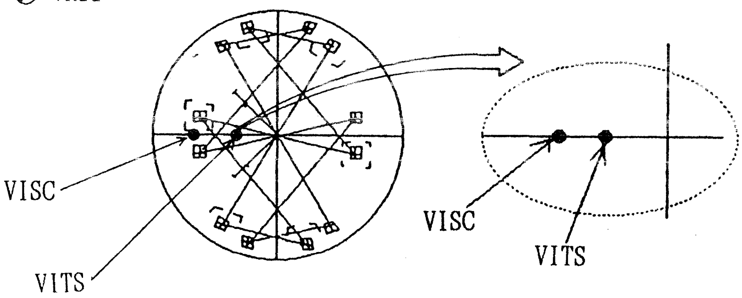 VISC PHASE & VIR PHASE should be the same

13-19. 13.5 MHz PLL ADJUSTMENT (1)
(FOR AU-65H / AU-65)

(W4 DEC & CTCM)

TEST POINT	MODE	TAPE USED	M.EQ.	INPUT SIGNAL	ADJUSTMENT
VIDEO 2 OUT	E-E (EJECT)	------	VECTOR SCOPE	LINE IN COLOUR BAR (with VIR Signal that have Pb axis SC)	VR701 (SYNC ϕ)

Step 1.

MACHINE CONDITION

1. TBC & SYNC GEN (W1) Adjustment should be completed before this adjustment is done.
2. ENCODER (W2) Adjustment should be completed. before this adjustment is done.
3. STD/NSTD SELECT : NSTD (Set-up Menu No. 1011 → 01 NON-STD)
4. SW7 (on W1) : OFF

Step 2.

1. VECTOR SCOPE : VIDEO 2 OUT
2. Set the vector scope burst, level 100% and burst phase on the burst line of the vector scope.
3. Confirm that the VIR (Pb axis Sub Carrier) Phase is VIR Phase = U axis.
4. If it is not, adjust VR701 so that the VIR Phase is on U axis. (Phase Difference = 0 ± 2°)
5. SW7 (on W1) : ON

VIDEO 2 OUT

⊘ VR701

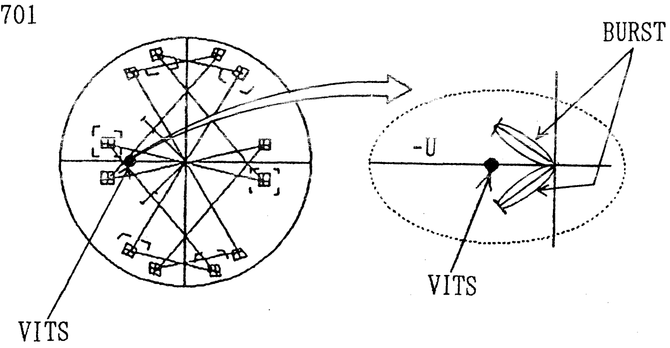

13-20. 13.5 MHz PLL ADJUSTMENT (2)
(FOR AU-65H / AU-65)

(W4 DEC & CTCM)

TEST POINT	MODE	TAPE USED	M.EQ.	INPUT SIGNAL	ADJUSTMENT
VIDEO 2 OUT	E-E (EJECT)	------	VECTOR SCOPE	LINE IN COLOUR BAR (with VIR Signal that have Pb axis SC)	VR703 (PLL POS 2)

Step 1. MACHINE CONDITION	1. TBC & SYNC GEN (W1) Adjustment should be completed before this adjustment is done. 2. ENCODER (W2) Adjustment should be completed before this adjustment is done. 3. STD/NSTD SELECT : STD (Set-up Menu No. 1101 → 00 FRONT SWITCH) (Input signal is standard from signal generator) 4. SW7 (on W1) : OFF
Step 2. 1. VECTOR SCOPE : VIDEO 2 OUT 2. Set the vector scope, burst level 100% and burst phase on the burst line of the vector scope. 3. Confirm that the VIR (Pb axis sub Carrier) Phase is VIR Phase = -U axis. 4. If it is not, adjust VR703 so that the VIR is on U axis. (Phase Difference = 0 ± 2°) 5. SW7 (on W1) : ON	VIDEO 2 OUT ⊘ VR703 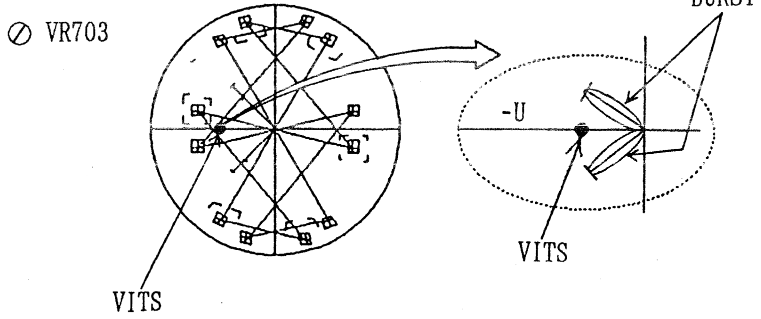

13-21. 13.5 MHz PLL ADJUSTMENT (3)
(FOR AU-65H / AU-65)

(W4 DEC & CTCM)

TEST POINT	MODE	TAPE USED	M.EQ.	INPUT SIGNAL	ADJUSTMENT
TP703	E-E (EJECT)	------	OSCILLOSCOPE	LINE IN COLOUR BAR	VR702 (PLL POS 1) SW800 (VISC CONT SW)

Step 1. MACHINE CONDITION	1. TBC & SYNC GEN (W1) Adjustment should be completed before this adjustment is done. 2. ENCODER (W2) Adjustment should be completed before this adjustment is done. 3. STD/NSTD SELECT : STD (Set-up Menu No. 1011 → 00 FRONT SWITCH) (Input Signal is standard from Signal generator)
Step 2. 1. SCOPE : TP703 2. Trigger the scope with the composite sync out of the signal generator. 3. Memorize the sync position in STD mode. 4. STD/NSTD SELECT : NSTD (Set-up Menu No. 1011 → 01 NON-STD) 5. Confirm that the sync position of NSTD mode is same as STD mode. 6. If it is not, adjust VR702 so that the NSTD sync position is same as STD sync position. 7. After adjustment SW800 (W2) set "ON" mode.	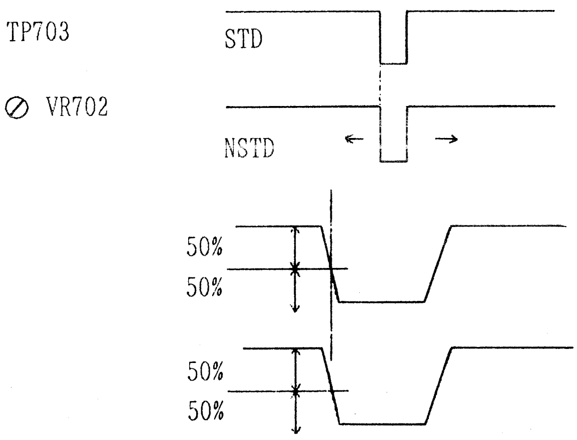 TP703 ⊘ VR702 STD NSTD ← → 50% 50% 50% 50%

14. AUDIO (W6) BOARD (2/2)

FM AUDIO SECTION (W6) FLOWCHART FOR AU-65H/AU-65

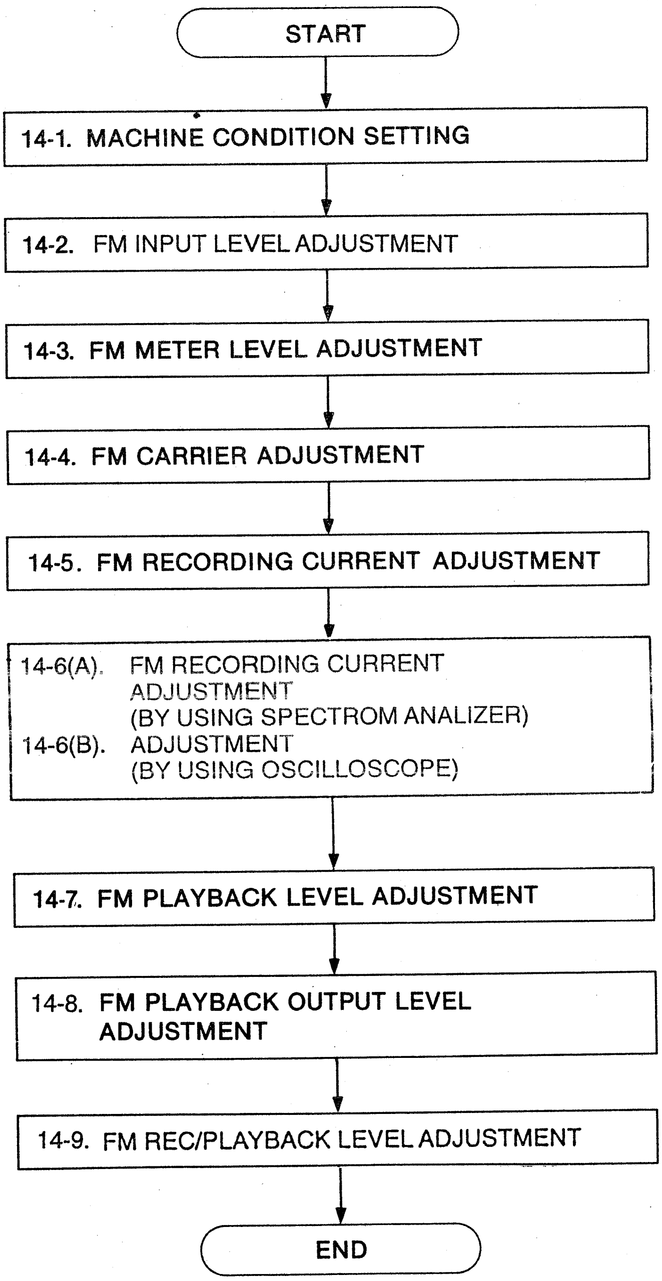

START
14-1. MACHINE CONDITION SETTING
14-2. FM INPUT LEVEL ADJUSTMENT
14-3. FM METER LEVEL ADJUSTMENT
14-4. FM CARRIER ADJUSTMENT
14-5. FM RECORDING CURRENT ADJUSTMENT
14-6(A). FM RECORDING CURRENT ADJUSTMENT (BY USING SPECTROM ANALIZER)
14-6(B). ADJUSTMENT (BY USING OSCILLOSCOPE)
14-7. FM PLAYBACK LEVEL ADJUSTMENT
14-8. FM PLAYBACK OUTPUT LEVEL ADJUSTMENT
14-9. FM REC/PLAYBACK LEVEL ADJUSTMENT
END

FM AUDIO SECTION (W6) FLOWCHART FOR AU-63H/AU-63, AU-62H/AU-62

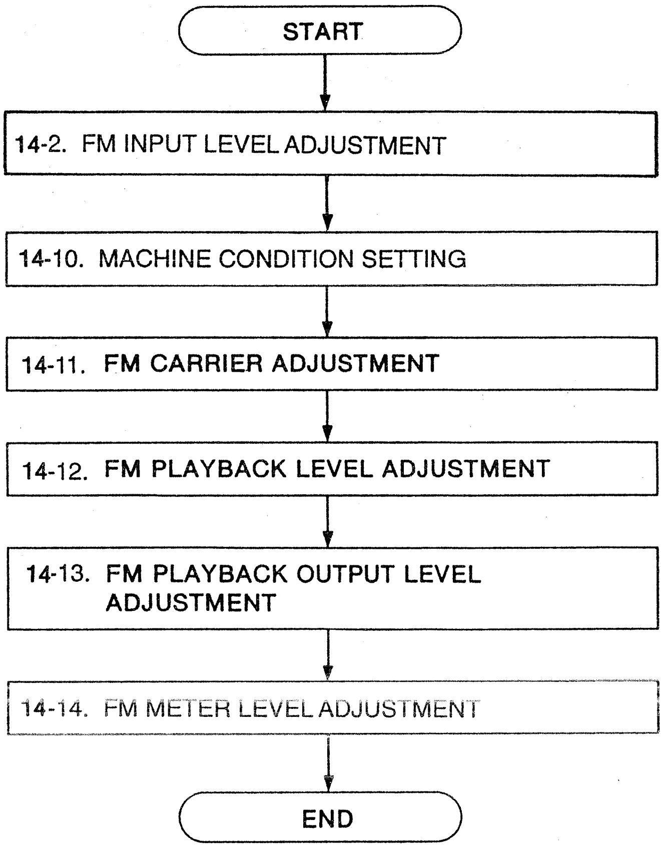

START
14-2. FM INPUT LEVEL ADJUSTMENT
14-10. MACHINE CONDITION SETTING
14-11. FM CARRIER ADJUSTMENT
14-12. FM PLAYBACK LEVEL ADJUSTMENT
14-13. FM PLAYBACK OUTPUT LEVEL ADJUSTMENT
14-14. FM METER LEVEL ADJUSTMENT
END

14. AUDIO (W6) BOARD (2/2)

— FM AUDIO SECTION —

14-1. MACHINE CONDITION SETTING (FOR AU-65H / AU-65 FM AUDIO)

Set the switches on the Front Panel as shown except certain steps.
(See Machine Condition).

PB VR -- PRESET side
METER SELECT --- FM
MODE --- E-E
INPUT LEVEL SELECT (on the Audio I/O Board) --------------- +0dBu
OUTPUT LEVEL SELECT (on the Audio I/O Board) --------------- +0dBu

14-2. FM INPUT LEVEL ADJUSTMENT

(W6 AUDIO)

TEST POINT	MODE	TAPE USED	M.EQ.	INPUT SIGNAL	ADJUSTMENT
TP702 (CH3) TP802 (CH4)	E-E (EJECT)	-------	VTVM	1KHz Sinewave Signal 0dBu (CH3/CH4)	VR9 (AUDIO VR CH3) VR13 (AUDIO VR CH4)

Step 1.

VTVM : TP702 (CH3)
TP802 (CH4)

1. Adjust VR9 so that the CH3 audio level at TP702 is -16.0dBV ± 0.5dBV.
2. Adjust VR13 so that the CH4 audio level at TP802 is -16.0dBV ± 0.5dBV.

14-3. FM E-E OUTPUT LEVEL ADJUSTMENT (FOR AU-65H / AU-65)

(W6 AUDIO)

TEST POINT	MODE	TAPE USED	M.EQ.	INPUT SIGNAL	ADJUSTMENT
CH3 LINE OUT CH4 LINE OUT	EJECT	-------	VTVM	1KHz Sinewave Signal +0dBu	VR701 (CH3 EE) VR801 (CH4 EE)

Step 1. MACHINE CONDITION	Refer to Set Up Conditions at the beginning of this SECTION (AUDIO - W6 Machine Condition 14-1).
Step 2. VTVM : CH3 LINE OUT CH4 LINE OUT	SPECIFICATION : +0dBu ± 0.2dB

14-4. FM METER LEVEL ADJUSTMENT (FOR AU-65H / AU-65)

(FRONT I/F BOARD)

TEST POINT	MODE	TAPE USED	M.EQ.	INPUT SIGNAL	ADJUSTMENT
CH3 METER CH4 METER	EJECT	-------	-------	1KHz Sinewave Signal 0dBu	VR103 (CH3 METER) on Front Interface Board VR104 (CH4 METER) on Front Interface Board

Step 1. MACHINE CONDITION	Refer to Set Up Conditions at the beginning of this SECTION (AUDIO - W6 Machine Condition 14-1).
Step 2. 1. Adjust VR103 (CH1) and VR104 (CH3) on the Front Interface Board so that the meter indicates "-4" VU as shown.	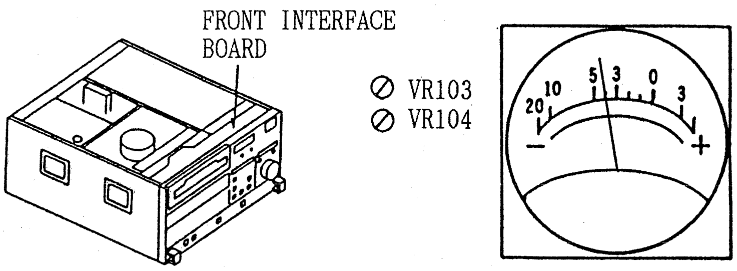 FRONT INTERFACE BOARD ⊘ VR103 ⊘ VR104 20 10 5 3 0 3 − +

14-5. FM CARRIER ADJUSTMENT (FOR AU-65H / AU-65)

(W6 AUDIO)

TEST POINT	MODE	TAPE USED	M.EQ.	INPUT SIGNAL	ADJUSTMENT
TP704 (CH3) TP804 (CH4)	EJECT	-------	FREQUENCY COUNTER	----------	VR704 (CH3 FO) VR804 (CH4 FO)

Step 1. MACHINE CONDITION	Refer to Set Up Conditions at the beginning of this SECTION (AUDIO - W6 Machine Condition 14-1).
Step 2. Frequency Counter : TP704 (CH3) TP804 (CH4)	SPECIFICATION : TP704 = 400KHz ± 1KHz TP804 = 700KHz ± 1KHz

14-6(A). FM RECORDING CURRENT ADJUSTMENT (BY USING SPECTRUM ANALYZER) (FOR AU-65H / AU-65)

(W6 AUDIO)

TEST POINT	MODE	TAPE USED	M.EQ.	INPUT SIGNAL	ADJUSTMENT
TP2 on RA & HA P. C. Board	EJECT	-------	SPECTRUM ANALYZER	COMPOSITE 50% FLAT FIELD TO LINE INPUT	VR901 (FM CURR.)

Step 1. MACHINE CONDITION	1. Refer to Set Up Conditions at the beginning of this SECTION (AUDIO - W6 Machine Condition 14-1). 2. The Video Head must be degaussed with a magnetic eraser. 3. The C REC CURRENT ADJ. (12-13 and 12-14) should be completed.
Step 2. 1. ANALYZER : TP2 (on RA & HA P.C.B.) 2. Adjust VR901 so that the FM Carrier Level is -27dB ± 0.5dB against the chroma carrier level as shown.	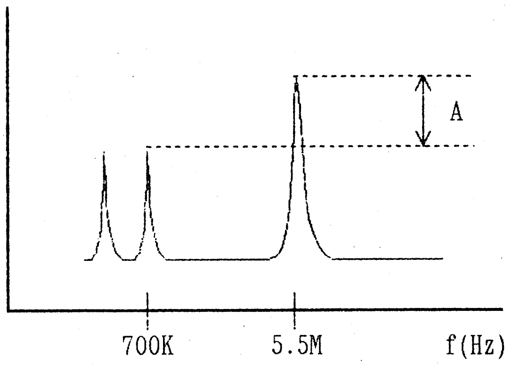 A = -27dB ± 0.5dB

14-6(B). FM RECORDING CURRENT ADJUSTMENT (BY USING OSCILLOSCOPE) (FOR AU-65H / AU-65)

TEST POINT	MODE	TAPE USED	M.EQ.	INPUT SIGNAL	ADJUSTMENT
TP2 on RA & HA P. C. Board	EJECT	-------	OSCILLOSCOPE	COMPOSITE 50% FLAT FIELD TO LINE INPUT	VR901 (FM CURR.)

Step 1. MACHINE CONDITION	1. Refer to Set Up Conditions at the beginning of this SECTION (AUDIO - W6 Machine Condition 14-1). 2. The C REC CURRENT ADJ. (12-13 and 12-14) should be completed.
Step 2. SCOPE CONDITION	VOLTS/DIV. = 50mV or 20mV TIME /DIV. = 20nsec BAND FILTER = OFF
Step 3. SCOPE : TP2 (on RA & HA P.C.B.) 1. VR901 : Fully Clockwise 2. Adjust VR901 so that the FM Carrier (A) level becomes 35mV ± 5mVp-p as shown.	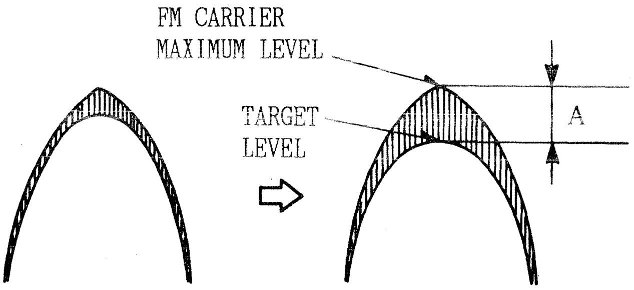 A = 35 ± 5mVp-p

14-7. FM PLAYBACK LEVEL ADJUSTMENT (FOR AU-65H / AU-65)

(W6 AUDIO)

TEST POINT	MODE	TAPE USED	M.EQ.	INPUT SIGNAL	ADJUSTMENT
TP702 TP802	PLAY	ALIGNMENT TAPE 1KHz OVU PORTION	VTVM	----------	VR703 (CH3 PB) VR803 (CH4 PB)

Step 1. MACHINE CONDITION VTVM CONDITION	Refer to Set Up Conditions at the beginning of this SECTION (AUDIO - W6 Machine Condition 14-1). FILTER : 20KHz L.P.F. (DIN AUDIO)
Step 2. 1. Play back the 1KHz OVU portion of the Alignment Tape. 2. Adjust VR703 and VR803 so that the TP702 and TP802 becomes -16dB ± 0.2dB.	⊘ VR703 VR803 SPECIFICATION : -16dB ± 0.2dB

14-8. FM PLAYBACK OUTPUT LEVEL ADJUSTMENT (FOR AU-65H / AU-65)

(FRONT I/F BOARD)

TEST POINT	MODE	TAPE USED	M.EQ.	INPUT SIGNAL	ADJUSTMENT
CH3 LINE OUT CH4 LINE OUT	PLAY	ALIGNMENT TAPE	VTVM	----------	VR12 (CH3 PB LEVEL) (on Front I/F Board) VR13 (CH4 PB LEVEL) (on Front I/F Board)

Step 1. MACHINE CONDITION	1. Refer to Set Up Conditions at the beginning of this SECTION (AUDIO - W6 Machine Condition 14-1). 2. FM AUDIO PB LEVEL SW (CH3 & CH4) : PRESET (on Front Interface Board)
Step 2. 1. Play back the 1KHz OVU portion of the Alignment Tape. 2. Adjust VR12 and VR13 so that the CH3 and CH4 PB LEVEL is +0dBu ± 0.2dB.	⊘ VR 12/13 (on Front I/F Board) SPECIFICATION : +0dBu ± 0.2dB

14-9. FM REC/PLAYBACK LEVEL CONFIRMATION (FOR AU-65H / AU-65)

(W6 AUDIO)

TEST POINT	MODE	TAPE USED	M.EQ.	INPUT SIGNAL	ADJUSTMENT
CH3 LINE OUT CH4 LINE OUT	SELF REC/PLAY	BLANK TAPE	VTVM	1KHz Sinewave Signal +0dBu	VR705 (CH3 DEV.) VR805 (CH4 DEV.)

Step 1. MACHINE CONDITION	Refer to Set Up Conditions at the beginning of this SECTION (AUDIO - W6 Machine Condition 14-1).
Step 2. 1. Make a recording for a few minutes. 2. Play back the just recorded portion. 3. Confirm that the Line Output Level is +0dBu ± 0.2dB. 4. If it is not, adjust VR705 and VR805 and repeat from Item 1 to Item 3 until the output level becomes +0dBu ± 0.2dB.	SPECIFICATION : +0dBu ± 0.2dB

14-10. MACHINE CONDITION SETTING (FOR AU-63H/62H AU-63/62 FM AUDIO)

Set the switches on the Front Panel as flollows except special condition.

PB VR -- PRESET side
METER SELECT --- FM
OUTPUT LEVEL SELECT (on the Audio I/O Board) --------------- +0dBu

14-11. FM CARRIER ADJUSTMENT (FOR AU-62H/63H and AU-62/63)

(W6 AUDIO)

TEST POINT	MODE	TAPE USED	M.EQ.	INPUT SIGNAL	ADJUSTMENT
TP704 (CH3) TP804 (CH4)	EJECT	-------	FREQUENCY COUNTER	----------	VR704 (CH3 FO) VR804 (CH4 FO)

Step 1. MACHINE CONDITION	1. Refer to Set Up Conditions at 14-10 Machine Condition Setting. 2. Short a jumper wire between TP902 and TP903.
Step 2. Frequency Counter : TP704 (CH3) TP804 (CH4)	SPECIFICATION : TP704 = 400KHz ± 1KHz TP804 = 700KHz ± 1KHz

14-12. FM PLAYBACK LEVEL ADJUSTMENT (FOR AU-62H/63H and AU-62/63)

(W6 AUDIO)

TEST POINT	MODE	TAPE USED	M.EQ.	INPUT SIGNAL	ADJUSTMENT
CH3 TP702 CH4 TP802	PLAY	ALIGNMENT TAPE 1KHz 0VU	VTVM	----------	VR703 (CH3 PB) VR803 (CH4 PB)

Step 1. MACHINE CONDITION	Refer to Set Up Conditions at 14-10 Machine Condition Setting.
Step 2. 1. Play back the 1KHz 0VU portion of the Alignment Tape. 2. Adjust VR703 and VR803 so that the Line output level becomes -16dB ± 0.2dB.	⊘ VR703 VR803 SPECIFICATION : -16dB ± 0.2dB

14-13. FM PLAYBACK OUTPUT LEVEL ADJUSTMENT (FOR AU-62H/63H and AU-62/63)

(W6 AUDIO)

TEST POINT	MODE	TAPE USED	M.EQ.	INPUT SIGNAL	ADJUSTMENT
CH3 LINE OUT CH4 LINE OUT	PLAY	ALIGNMENT TAPE 1KHz 0VU	VTVM	----------	VR12 (CH3 PB LEVEL) (on Front I/F Board) VR13 (CH4 PB LEVEL) (on Front I/F Board)

Step 1. MACHINE CONDITION	1. Refer to Set Up Conditions at 14-10 Machine Condition Setting. 2. FM AUDIO PB LEVEL SW (CH3 & CH4) : PRESET (on Front Interface Board)
Step 2. 2. Play back the 1KHz 0VU portion of the Alignment Tape. 3. Adjust VR12 and VR13 so that the CH3 and CH4 PB LEVEL is +0dBu ± 0.2dB.	⊘ VR 12 (on Front I/F Board) ⊘ VR 13 SPECIFICATION : +0dBu ± 0.2dB

14-14. FM METER LEVEL ADJUSTMENT (FOR AU-62H/63H and AU-62/63)

(W6 AUDIO)

TEST POINT	MODE	TAPE USED	M.EQ.	INPUT SIGNAL	ADJUSTMENT
CH3 METER CH4 METER	EJECT	-------	-------	1KHz Sinewave Signal +0dBu	VR103 (CH3 METER) on Front Interface Board VR104 (CH4 METER) on Front Interface Board

Step 1. MACHINE CONDITION	Refer to Set up Conditions at 14-10 Machine Condition Setting.
Step 2. 1. Adjust VR103 (CH1) and VR104 (CH3) on the Front Interface Board so that the meter indicates "-4" VU as shown in figure.	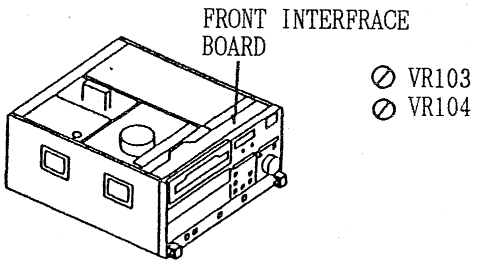 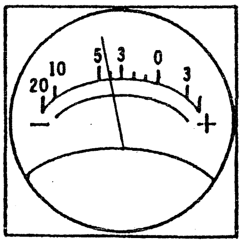

15. FRONT PANEL (FOR AU-63H/62H and AU-63/62)

15-1. ALARM OSC & LEVEL ADJUSTMENT

(FRONT PANEL B)

TEST POINT	MODE	TAPE USED	M.EQ.	INPUT SIGNAL	ADJUSTMENT
TP14 TP15	EJECT		OSCILLOSCOPE	----------	VR 1 (ALARM OSC) VR 2 (ALARM LEVEL)

Step 1. MACHINE CONDITION	SW4 - 8 : ON VR2 : Fully Counterclockwise
Step 2. Adjust VR1 so that the period A is 250μsec. ($\pm 10\mu$sec.) as shown in figure.	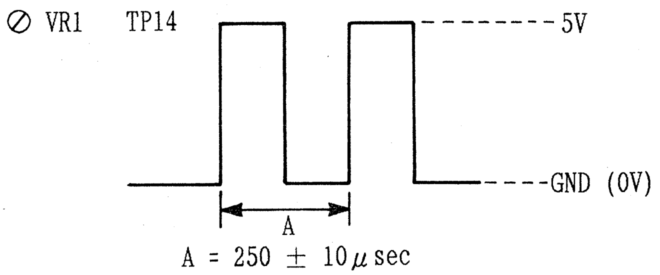 ⊘ VR1 TP14 5V GND (0V) A A = 250 ± 10μsec
Step 3. Confirm that the voltage level is from 4.5V to 4.7V as shown in figure.	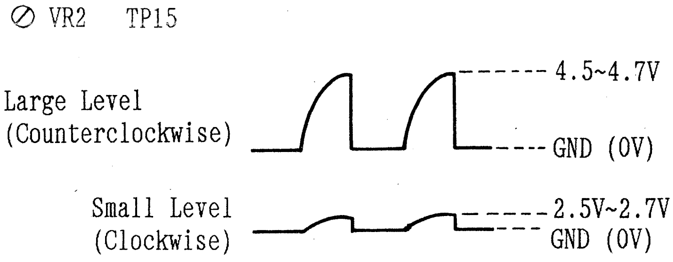 ⊘ VR2 TP15 Large Level (Counterclockwise) 4.5~4.7V GND (0V) Small Level (Clockwise) 2.5V~2.7V GND (0V)
Step 4. Set VR2 fully clockwise and confirm that the voltage level is from 2.5V to 2.7V as shown in figure.	
Step 5. Reset SW4-8 to OFF and reset VR2 fully counterclockwise to set the maximum audio level.	

16. SENC & P IN P BOARD (AU-65H)

SENC & P IN P FLOWCHART

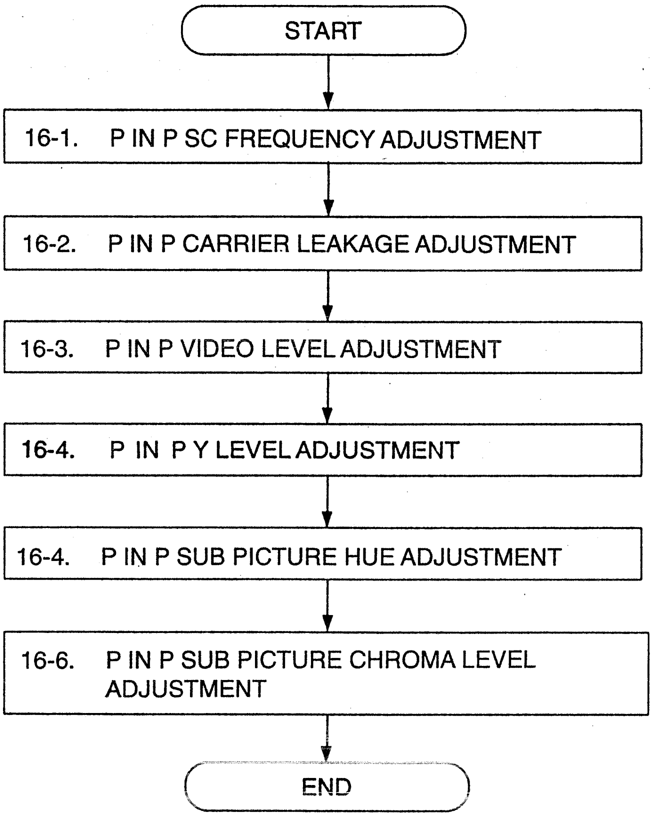
START
16-1. P IN P SC FREQUENCY ADJUSTMENT
16-2. P IN P CARRIER LEAKAGE ADJUSTMENT
16-3. P IN P VIDEO LEVEL ADJUSTMENT
16-4. P IN P Y LEVEL ADJUSTMENT
16-4. P IN P SUB PICTURE HUE ADJUSTMENT
16-6. P IN P SUB PICTURE CHROMA LEVEL ADJUSTMENT
END

16. SENC & P IN P BOARD (FOR AU-65H ONLY)

16-1. P IN P SC FREQUENCY ADJUSTMENT (FOR AU-65H)

(P IN P)

TEST POINT	MODE	TAPE USED	M.EQ.	INPUT SIGNAL	ADJUSTMENT
TP501 (IC505-9)	E-E (EJECT)	-------	FREQUENCY COUNTER	COMPONENT 100% COLOUR BAR OR LINE 100% COLOUR BAR WITHOUT BURST	VC501 (FREQ)

Step 1. MACHINE CONDITTION	STD / NSTD SELECT : STD (Set Up Menu)
Step 2. 1. Frequency Counter : TP501(IC505-9) 2. Adjust VC501 so that the reading of frequency counter is 4433618 ± 10Hz. 3. Confirm that the frequency in both the component and line inputs.	TP501 ⊘ VC501 SPECIFICATION : 4433618 ± 10Hz

16-2. P IN P CARRIER LEAKAGE ADJUSTMENT

(P IN P)

TEST POINT	MODE	TAPE USED	M.EQ.	INPUT SIGNAL	ADJUSTMENT
TP801	E-E (EJECT)	-------	OSCILLOSCOPE	COMPONENT 100% COLOUR BAR	VR801 (PR BAL) VR802 (PR BAL)

Step 1. MACHINE CONDITTION	STD / NSTD SELECT : STD (Set Up Menu)
Step 2. 1. SCOPE : TP801 2. Adjust VR801 and VR802 mutually and nullify the carrier leakage.	TP801 ⊘ VR801 ⊘ VR802 CARRIER LEAKAGE IS MINIMIZED AS POSSIBLE 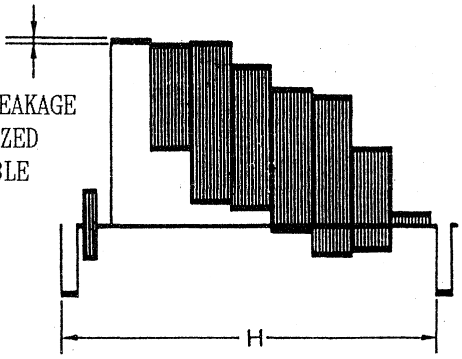

16-3. P IN P VIDEO LEVEL ADJUSTMENT

(P IN P)

TEST POINT	MODE	TAPE USED	M.EQ.	INPUT SIGNAL	ADJUSTMENT
VIDEO 3	E-E (EJECT)	-------	OSCILLOSCOPE	LINE INPUT COLOUR BAR	VR3 (V GAIN)

Step 1. MACHINE CONDITION	1. STD / NSTD SELECT : STD (Set Up Menu) 2. Set the VIDEO OUT3 SELECT (Item 2005) to P IN P position on the on-screen set-up menu and press each time the SYSTEM SET UP button on the B1 system control board so that the sub picture is placed at the bottom left as shown below. 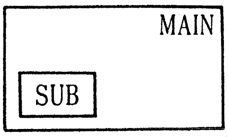
Step 2. 1. SCOPE : VIDEO 3 2. Confirm the following specifications. Y LEVEL = 0.700 ± 0.025Vp-p	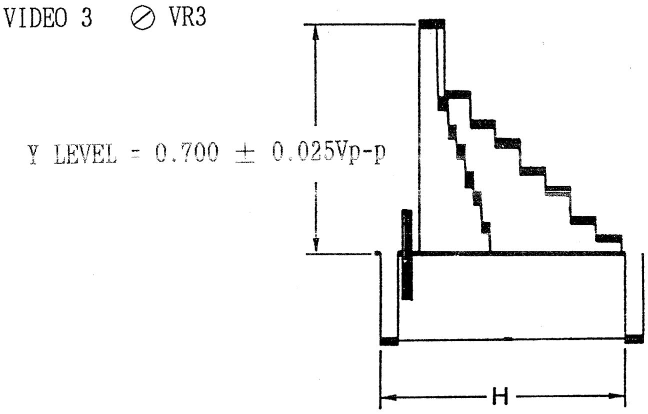

16-4. P IN P Y LEVEL ADJUSTMENT (P IN P)

TEST POINT	MODE	TAPE USED	M.EQ.	INPUT SIGNAL	ADJUSTMENT
VIDEO 3	E-E (EJECT)	-------	OSCILLOSCOPE	LINE INPUT COLOUR BAR	VR8 (Y GAIN) VR2 (CLAMP)

Step 1.

MACHINE CONDITION

1. Set the VIDEO OUT3 SELECT (Item 2005) to P IN P position on the on-screen set up menu and press each time the SYSTEM SET UP button on the B1 System Control board so that the sub picture is placed at the bottom left as shown below.

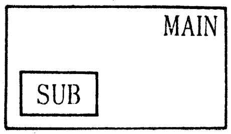

Step 2.

1. SCOPE : VIDEO 3

VIDEO 3 ∅ VR8, VR2

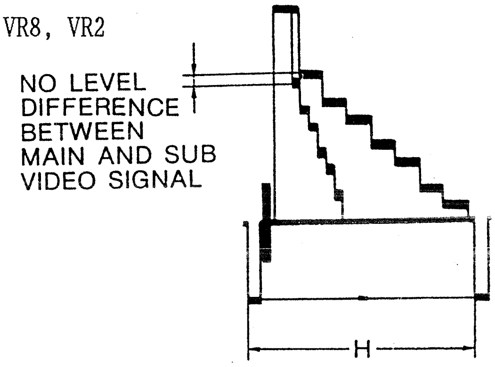

16-5. P IN P SUB PICTURE HUE ADJUSTMENT (P IN P)

TEST POINT	MODE	TAPE USED	M.EQ.	INPUT SIGNAL	ADJUSTMENT
VIDEO 3	E-E (EJECT)	-------	VECTORSCOPE	LINE INPUT COLOUR BAR	VR7 (HUE)

Step 1.

1. Adjust VR7 so that the each vector phase of main picture and sub picture fall within the 10% standard box of the vectorscope and are the same phase.

VIDEO 3 ∅ VR7

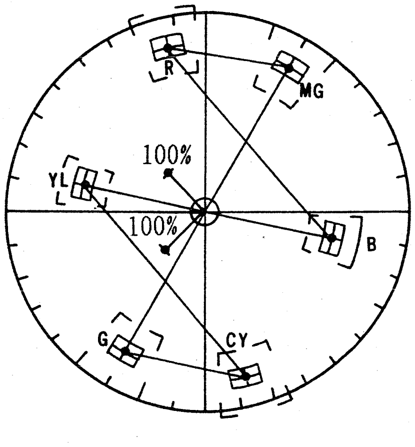

16-6. P IN P SUB SCREEN CHROMA LEVEL ADJUSTMENT

TEST POINT	MODE	TAPE USED	M.EQ.	INPUT SIGNAL	ADJUSTMENT
VIDEO 3	E-E (EJECT)	-------	VECTORSCOPE	LINE INPUT COLOUR BAR	VR9 (C GAIN)

Step 1.

1. Adjust VR9 so that the each vector phase of main picture and sub picture fall within the 10% standard box of the vectorscope and the same phase.

VIDEO 3 ⊘ VR9

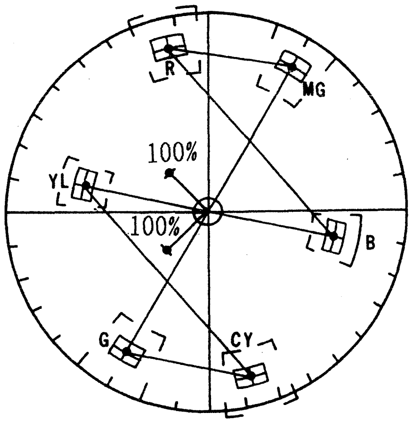

17. TIME CODE GEN & READER (B2) BOARD (AU-65H,63H and 62H have been installed with a TCG/TCR in standard)

17-1. TRIMMER ADJUSTMENT

(B2 TCG/TCR)

TEST POINT	MODE	TAPE USED	M.EQ.	INPUT SIGNAL	ADJUSTMENT
TP 6	EJECT	-------	FREQUENCY COUNTER	----------	C19
1. Confirm that the frequency at TP6 is 512.000 ± 0.002Hz. 2. If it is not specification, adjust C19 as mentioned above.			TP6 : 512.000 ± 0.002Hz		

Service Manual

Panasonic MII

Operating Instructions
Feature and Technical Explanation
Maintenance and Mechanical
Adjustment Procedures
Electrical Adjustment Procedures
Block Diagrams
Schematic Diagrams
Printed Circuit Board Diagrams
Exploded Views
Replacement Parts Lists

STUDIO VTR
AU-65

STUDIO PLAYER
AU-63

STUDIO PLAYER
AU-62

TIME CODE GENERATOR/READER
AU-F65

50PIN PARALLEL REMOTE CONNECTOR
AU-MK25

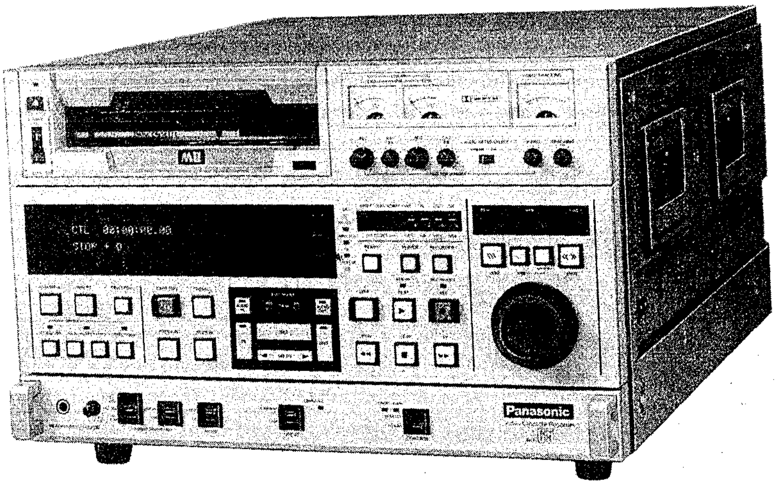

NTSC/PAL

MODEL: AU-65

Revision 1

Panasonic

OPERATING INSTRUCTIONS

This instruction is just an over-view.
Detailed procedures are supplied in the operating instructions for the AU-65, AU-63 and AU-62.

asonic

CONTENTS

Specifications 1
Features 3
Front Panel 5
Rear Panel 8
Front Sub-Panel 10
System Control Board 11
TCG/TCR Board 11
Preset Panel 12
Circuit Boards (Shipment Mode) 12
Operation Method of Dial Menu Function 17
Set-up Menus 18
Servo Reference 21
Colour Framing 22
REC Inhibit Table 24
Control Signals 24
Connector Signals 25
Error Messages 25
Head Cleaning 26
Precaution for Handling Unit 27
Rack Mounting 27

Specifications

		NTSC			PAL		
		AU-65-P	AU-63-P	AU-62-P	AU-65-E/B	AU-63-E/B	AU-62-E/B
General							
Power Supply		120 V AC, 50/60 Hz			100~240 V AC, 50/60 Hz		
Power Consumption		180 W	140 W		180 W	140 W	
Recording/Playback System		MII format, 4 rotary heads, 2-tack helical scanning					
Tape Speed		67.693 mm/sec.			66.295 mm/sec.		
Tape		½-inch metal particle tape					
Recording Time		90 minutes (with AU-M90L tape)			97 minutes (with AU-M90L tape)		
FF/REW Time		Less than 3 minutes (with AU-M60L tape)					
Operating Temperature		41°F to 104°F/5°C to 40°C					
Operating Humidity		35%–80%			Under 80%		
Dimensions (W×H×D)		17½″×11 7/16″×22 9/16″/444×291×574 mm					
Weight		75.3 lbs	75 lbs		34 kg	32 kg	
Video							
Television Format		NTSC: 525 lines, 59.94 fields			PAL: 625 lines, 50 fields		
Y Modulation System		Frequency modulation					
C Modulation System		Time compressed multiplexing (P_B, P_R)					
Bandwidth Component	Y	30 Hz~4.5 MHz +1.0/−4.0 dB			25 Hz~5.5 MHz +1.0/−4.0 dB		
	C (P_B, P_R)	30 Hz~1.5 MHz +0.5/−3.0 dB			25 Hz~2.0 MHz +1.0/−4.0 dB		
S/N Ratio Component	Y	Better than 49 dB (200 kHz~4.2 MHz WIDE BAND)			Better than 46 dB (200 kHz~5 MHz, SC trap OFF)		
	C	Better than 50 dB (AM • PM) (1 kHz~500 kHz)			Better than 48 dB (AM)/50 dB (PM) (1 kHz~500 kHz)		
Y/C Delay		Less than 20 ns					
K Factor		Less than 2%					
Differential Gain		Less than 3%					
Differential Phase		Less than 3%					
Linearity (Component)		Less than 3%					
Audio (Recording only) Linear (CH1/CH2)							
Frequency Response		50 Hz~15 kHz +2.0 dB/−3.0 dB					
S/N Ratio		Better than 56 dB (Dolby NR OFF)					
Distortion		Less than 1% at 1 kHz standard input level					
Cross Talk		Less than −65 dB at 1 kHz standard input level					
Wow and Flutter		Less than 0.15% rms			Less than 0.15% (DIN WTD)		
FM (CH3/CH4)							
Frequency Response		20 Hz~20 kHz +1/−2 dB					
Dynamic Range		More than 80 dB					
Distortion		Less than 0.5% at 1 kHz standard input level					
Cross Talk		Less than −65 dB at 1 kHz standard input level					

		NTSC			PAL		
		AU-65-P	AU-63-P	AU-62-P	AU-65-E/B	AU-63-E/B	AU-62-E/B
Video Input		provided	not provided		provided	not provided	
		Condition: 75% colour bar, 7.5% set up			Condition: 100% colour bars, 0% set up		
VIDEO IN		BNC×2 loop through with 75 ohm ON/OFF switch 1.0 Vp-p±0.3 Vp-p					
REF VIDEO IN		BNC×2 loop through with 75 ohm ON/OFF switch 1.0 Vp-p±0.3 Vp-p					
COMPONENT/YC IN		provided	not provided		provided	not provided	
Component BNC×3	Y	1.0 Vp-p 75 ohm					
	P_B	0.486 Vp-p 75 ohm			0.7 Vp-p 75 ohm		
	P_R	0.486 Vp-p 75 ohm			0.7 Vp-p 75 ohm		
YC 4 pin×1	Y	1.0 Vp-p 75 ohm					
	C	0.286 Vp-p (burst level) 75 ohm			0.3 Vp-p (burst level) 75 ohm		
Video Output		Condition: 75% colour bar, 7.5% set up			Condition: 100% colour bars, 0% set up		
VIDEO OUT BNC×3	Video Out 1	1.0 Vp-p±0.05 Vp-p 75 ohm, sync ON/OFF					
	Video Out 2	1.0 Vp-p±0.05 Vp-p 75 ohm, composite Out					
	Video Out 3	1.0 Vp-p±0.05 Vp-p 75 ohm, T/C superimpose ON/OFF					
COMPONENT OUT BNC×3	Y	1.0 Vp-p 75 ohm					
	P_B	0.486 Vp-p 75 ohm			0.7 Vp-p 75 ohm		
	P_R	0.486 Vp-p 75 ohm			0.7 Vp-p 75 ohm		
YC OUT 4 pin×1	Y	1 Vp-p 75 ohm					
	C	0.286 Vp-p (burst level) 75 ohm			0.3 Vp-p (burst level) 75 ohm		
Audio Input		provided	not provided		provided	not provided	
AUDIO IN XLR×4	CH1/CH2 (Linear)	−20/0/+4 dBm switchable more than 15 kohm, balanced			−20/0/+4 dBu switchable more than 10 kohm, balanced		
	CH3/CH4 (FM)	−20/0/+4 dBm switchable more than 10 kohm, balanced			−20/0/+4 dBu switchable more than 10 kohm, balanced		
TIME CODE IN BNC×1		2.2 Vp-p low impedance, unbalanced					
Audio Output							
AUDIO OUT XLR×4	CH1/CH2 (Linear)	−20/0/+4 dBm switchable low impedance, balanced			−20/0/+4 dBu switchable less than 50 ohm, balanced		
	CH3/CH4 (FM)						
TIME CODE OUT BNC×1		2.2 Vp-p low impedance, unbalanced					
MONITOR OUT XLR×1 (MIX)		0 dBm low impedance, balanced			0 dBu low impedance, balanced		
HEADPHONE OUT ¼″ (63 mm) Stereo Jack		−20 dB∼−∞ (variable), 8 ohm			−18 dB∼−∞ (variable), 8 ohm		

Features

High quality pictures
The MII series VTR developed for production/broadcast purposes ensures high quality pictures, comparable to those of 1" tape, by using ½" metal tape.

Built-in time base corrector (TBC)
A built-in TBC is utilized to provide stable playback, without the need for an external TBC.

Color framing
This unit's ability to control color framing in 4 field (NTSC) and 8 field (PAL) sequence assures optimum picture quality in composite signal editing, recording and playback. Subcarrier phase can be adjusted in relation to the input reference signal. CF, REF and INPUT SCH LED indicators are provided to indicate their functions.

Editing functions (AU-65 only)
The unit features auto/manual editing in assemble and insert modes (with two units). Individual/combination editing is possible in VIDEO•FM, AUDIO CH1/CH2, and TIME CODE modes. By installing an optional time code board AU-F65, time code editing can be performed.

Audio split editing (AU-65 only)
It is possible to enter the audio edit point separate from video, and audio edit can be individually performed with its edit point deflected from the video edit point.

Variable memory editing*
(AU-63 and AU-65 combination)
In the variable mode, the operating conditions (tape direction and speed change) within the range extending from normal speed in reverse (−1×) to twice normal speed forward (2×) can be entered and played back.

Setting of editing points (AU-65 only)
Editing points can be readily set by the shuttle, jog and variable functions. Tape travels at speeds ranging from still to +/−16× (setting available to 32×) in the shuttle mode, −1× to +2× in the jog mode, and −1× to +2× in the variable mode.

Auto tracking (AT) (AU-63 only)
The auto tracking mechanism enables noise-free playback pictures to be reproduced across a −1× to +2× slow motion playback range. The edge comb-shaped filter provides slow motion playback with a high resolution.

Tape speed override (TSO)
This function enables the tape speed to be manually adjusted in 1% increments up to 15% faster or slower than the normal playback speed.
Tape speed override is presettable from the internal switch.

Amorphous heads
This unit is equipped with amorphous video heads designed to match the magnetic characteristics of the metal tape used by MII system VTRs. Together, they greatly improve high frequency response and decrease the eddy current loss.

4-channel audio*
The unit's audio is a 4 channel design with two channels of linear audio and two channels of high quality FM sound.
Audio Mixing Output connector serves mixed sound of CH1 or CH2 audio and CH3 or CH4 audio.
The Dolby* C Noise Reduction System is provided for the linear channels.

*The same signal is recorded in both the linear audio and FM audio channels. **(AU-65 only)**

Large character display
Information is displayed concerning the status of the VTR such as, tape time, editing data, speed data and error messages.

Shuttle search at up to 32 times normal speed plus jog search
The shuttle mode allows high-speed access at a maximum of 16 times (setting available to 32 times) normal speed in both forward and reverse direction. The jog mode allows speed change from −1× to 2× times normal speed. The operation conditions are displayed in large size characters on the display for enhanced operation convenience.

Machine-to-machine synchronization and sync roll
This unit provides easy synchronization between two VTRs. When used with the optional Editing Controller (AU-A65), this bridge-through connection allows sync roll with simple connections.

*Dolby noise reduction manufactured under license from Dolby Laboratories Licensing Corporation.
*"DOLBY" and the double-D symbol ▯▯ are trademarks of Dolby Laboratories Licensing Corporation.

Automatic standard/non-standard selection
This unit automatically detects whether the input signal is RS-170A standard signal or non-standard. **(AU-65 only)**

Tape remaining and lap time indication
Tape remaining and edit duration time are indicated by digit, making it easy to see how much tape remains and to check the duration time of the IN/OUT point.

Encoder remote
The built-in encoder is controllable using the encoder remote connector (15P), provided on the rear panel.

Serial (9P) remote
This unit is equipped with serial (9P) remote interface. When editing with two VTR units, the player can be remotely controlled from the recorder using the serial 9P cable connection.

Parallel (50P) remote
When the optional parallel (50P) remote connector is used, remote control can be performed from a distance by parallel remote mode.

Superimpose
The data in a tape position and the VTR operation mode can be imposed on the television screen.

Component input/output connectors
(Input connector: AU-65 only)
Component input/output connectors are provided for interface with other equipment at the component signal level.

YC input/output connectors
(Input connector: AU-65 only)
YC input/output connectors have been provided to enable interfacing with other components using the YC signals.

Recorder inhibit (AU-65 only)
Individual record inhibits are provided for Video, Linear Audio and Time Code. With the switches ON, both recording and editing are inhibited.

Rack mount
The VTR can be mounted in a standard EIA 19" rack.

Front Panel

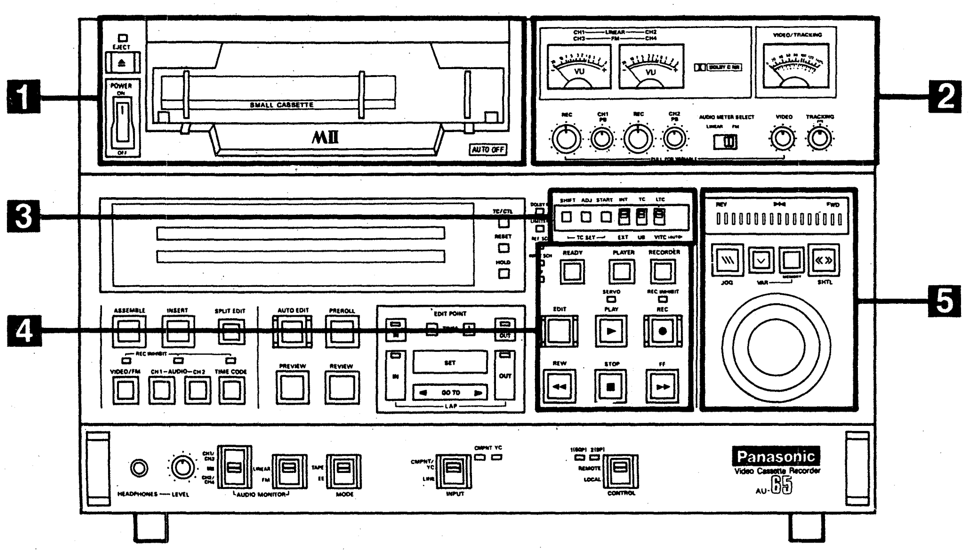

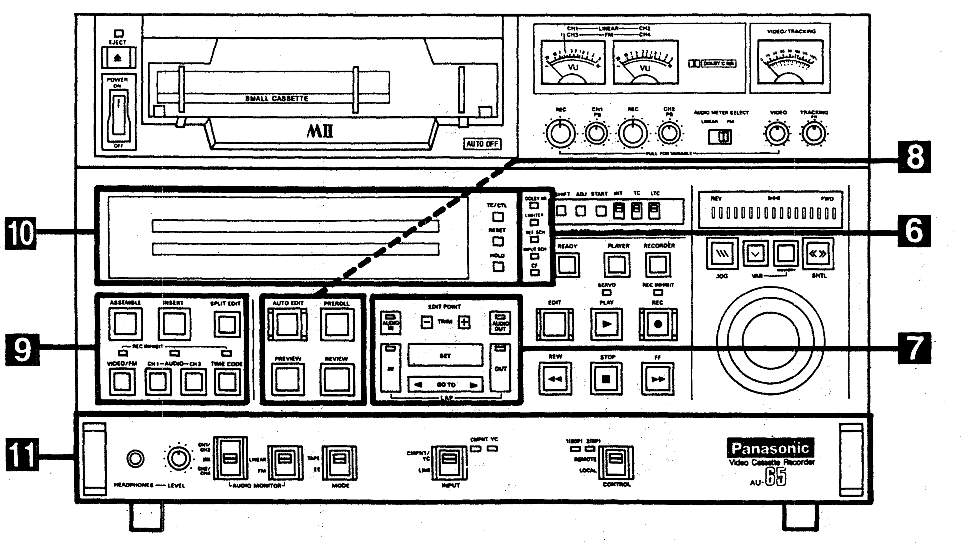

The above illustrations show the AU-65 as seen from the front.

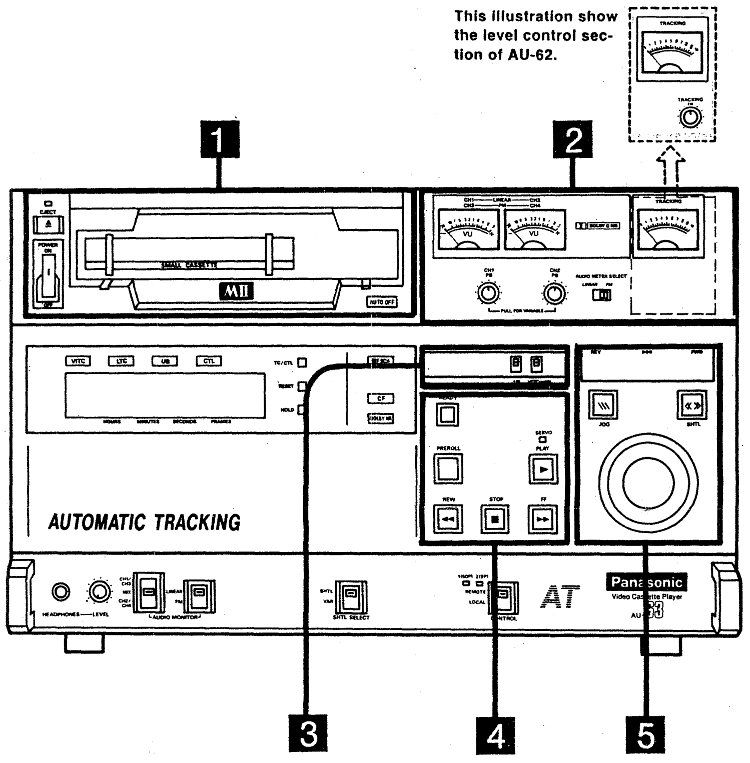

This illustration show the level control section of AU-62.

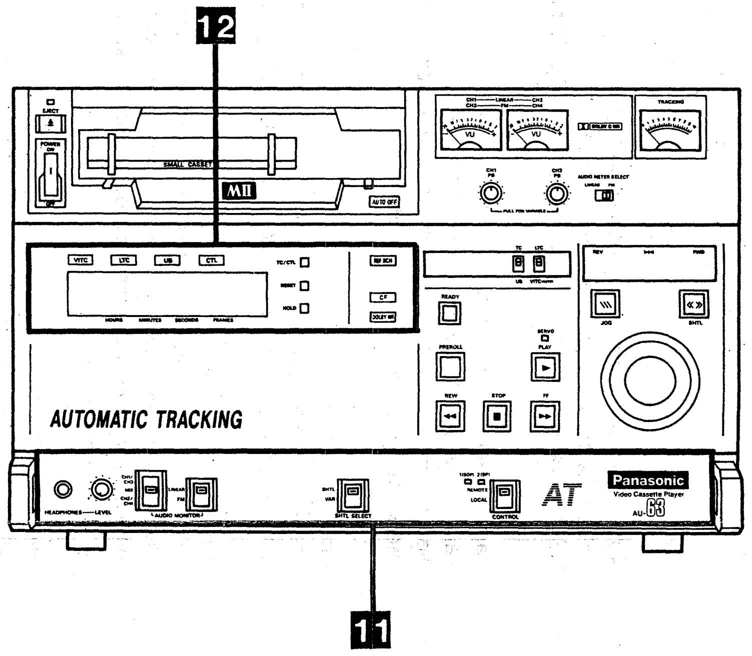

The above illustrations show the AU-63 as seen from the front.

This illustration shows the lower panel of the AU-62.

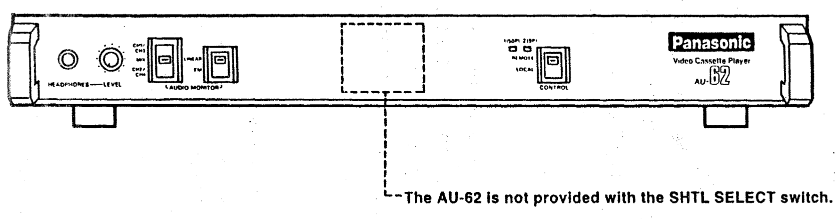

The AU-62 is not provided with the SHTL SELECT switch.

1 Power, cassette area

POWER Switch:	This is the power switch.
EJECT Button:	Press this to eject the tape.
EJECT Lamp:	This lights when a tape is ejected.
Cassette Holder:	This is where the 1/2-inch metal particle tape is inserted.
AUTO OFF Lamp:	This lights when there is something wrong with the unit. While it is lighted, only the unit's EJECT button among the controls is functional. (See page E-93)

2 Level control area

LINEAR AUDIO (CH1/CH2)/FM AUDIO (CH3/CH4) Meters:	These indicate the signal level for linear sound (CH1/2) and FM sound (CH3/CH4).
VIDEO/TRACKING Meter:	This indicates the video level or tracking level.
VIDEO Level Control:	This adjusts the composite video signal level.
TRACKING Control:	This adjusts the tracking.
Audio Level Controls:	Pull these out to adjust the audio level. Push them back into place when recording or playing back at the optimum (preset) level.
AUDIO METER SELECT Switch:	This switches between the linear audio meter and FM audio meter.
LINEAR:	Set to this position for linear sound.
FM:	Set to this position for FM sound.

3 Time code setting area

SHIFT Button:	This shifts the flashing part of the time code display.
ADJ Button:	This changes the value of the flashing part.
START Button:	Press this after completing the time code settings.
INT/EXT Switch:	During time code recording, this selects whether the recording is to use the AU-F65 (option) or external time code.
TC/UB Switch:	This switches between the time code and user bits display. (It works only when the TC/CTL switch has been set to the TC position.)
LTC/VITC (AUTO) Switch:	
LTC:	The LTCR or LUBR value is displayed.
VITC (AUTO):	The VITC or VUBR value is displayed. LTCR is displayed when VITC has not been recorded on tape. •If the time code cannot be read at either position, interpolation is provided by the CTL signal.

•The controls in the time code setting area function when the optional AU-F65 time code generator/reader board has been installed.

4 Basic control area

READY Button:	This is the READY mode ON/OFF button.
PLAYER Button:	This is pressed when operating the player, which is remote controlled by this unit, while using 2 VTRs for editing.
RECORDER Button:	This is pressed when operating the recorder (this unit) while using 2 VTRs for editing. **(AU-65 only)**
EDIT Button:	Editing commences when this is pressed together with the PLAY button. **(AU-65 only)**
PLAY Button:	Playback commences when this is pressed.
REC Button:	Recording commences when this is pressed together with the PLAY button. **(AU-65 only)**
REW Button:	This rewinds the tape at 32 times the normal tape speed.
STOP Button:	This shuts down all modes.
FF Button:	This fast forwards the tape at 32 times the normal tape speed.
SERVO LOCK Lamp:	This lights during servo lock.
REC INHIBIT Lamp:	This light in the recording inhibit mode. **(AU-65 only)**

5 Search control area

SEARCH Indicator:	This indicates the operating status of the search dial.
JOG Button:	This is pressed to establish the JOG mode.
VAR Button:	This is pressed to establish the variable mode.
VAR MEMORY Button:	This is pressed when conducting a variable memory operation. **(AU-65 only)**
SHTL Button:	This is pressed to establish the shuttle mode. **(AU-65 only)**
SEARCH Dial:	This changes the search speed.

6 LED display area on AU-65

LIMITER Lamp:	This lights when the front sub-panel AUDIO LIMITER switch is ON.
DOLBY NR Lamp:	This lights when the DOLBY NR switch is ON.
REF SCH Lamp:	This lights when SCH of the reference video signal is within ±60° of the standard signal.
INPUT SCH Lamp:	This lights when SCH of the LINE IN video signal is within ±70° of the standard signal.
CF Lamp:	This lights in the colour framing mode.

7 Editing point entry area on AU-65

AUDIO IN Button:	Use this for entering, checking and correcting AUDIO IN point.
IN Button:	Use this for entering, checking and correcting edit IN point.
TRIM +/– Buttons:	Use these when correcting an edit point in1-frame unit.
SET Button:	Use this for entering an edit point.
GO TO Button:	Use this for accessing an edit point.
AUDIO OUT Button:	Use this for entering, checking and correcting AUDIO OUT point.
OUT Button:	Use this for entering, checking and correcting edit OUT point.

8 Editing control area on AU-65

AUTO EDIT Button:	Press this to execute automatic editing.
PREROLL Button:	Press this to execute a preroll operation.
PREVIEW Button:	Press this to execute a preview operation.
REVIEW Button:	Press this to execute a review operation.

9 Editing mode selection area on AU-65

ASSEMBLE Button:		Press this to establish the assemble editing mode.
INSERT Button:		Press this to establish the insert editing mode.
REC INHIBIT Lamp:		This lights in the recording inhibit mode.
Editing Channel Selector Buttons:		These select the editing channel.
	VIDEO/FM:	Video/FM (CH3/4) is selected.
	AUDIO CH1:	Linear CH1 audio is selected.
	AUDIO CH2:	Linear CH2 audio is selected.
	TIME CODE:	Time code is selected.
SPLIT EDIT Button:		Press this to establish the audio split editing mode.

10 Display area on AU-65

Display:	The tape timer, time code, user bits and error messages appear on this display.
TC/CTL Switch:	This selects whether the time code (TC) or control signal (CTL) is to be used in order to read out the tape position.
RESET Button:	This resets the CTL value to zero.
HOLD Button:	Press this to hold whatever is on the display.

11 Bottom panel area

HEADPHONES Jack (6.3 mm):		Connect stereo headphones here.
HEADPHONE LEVEL Control:		This controls the headphones volume.
AUDIO MONITOR Controls:		These select the sound and channel to be monitored.
	CH1/3:	For CH1 (or CH3) sound monitoring in both the left (L) and right (R) channels.
	MIX:	For monitoring CH1 (or CH3) sound in the left (L) channel and CH2 (or CH4) sound in the right (R) channel.
	CH2/4:	For CH2 (or CH4) sound monitoring in both the left (L) and right (R) channels.
	LINEAR:	For monitoring linear sound (CH1/2).
	FM:	For monitoring FM sound (CH3/4).
MODE Switch:		This selects the monitoring picture in the stop or recording mode. **(AU-65 only)**
	TAPE:	For monitoring the playback picture.
	EE:	For monitoring the EE picture.
INPUT Switch:		This selects the input signal.
	LINE:	For recording the composite signal from the LINE IN connector.
	CMPNT/YC:	For recording the signal from the component input connector or YC input connector.
CONTROL Switch:		
	REMOTE:	For remote control.
	LOCAL:	Remote control is completely disabled.
***SHTL SELECT switch:**		Selects SHTL button function (AU-63 only).
	SHTL;	SHTL mode is established when SHTL button is pressed.
	VAR;	VAR mode is established when SHTL button is pressed.

12 Display section on AU-63/62

Display:		Indicates tape timer, time code, user's bit and error messages, etc.
Time code lamps:		
	VITC;	Lights in VITC mode.
	LTC;	Lights in LTC mode.
	UB;	Lights in UB mode.
	CTL;	Lights in CTL mode.
TC/CTL switch:		Selects the time code (TC) or control signal (CTL) for reading out the tape position indicated on the display. It also selects the reference signal during editing.
RESET button:		When pressed in the CTL mode, the tape timer indicated on the display is reset to zero.
HOLD button:		Press to hold the value now indicated on the display. Press it again to select the time code signal and then return to the previous mode.
REF SCH lamp:		Lights when the reference video signal SCH is ±60°.
CF lamp:		Lights in the colour framing mode.
DOLBY NR lamp:		Lights when the Dolby NR system is working.

Rear Panel

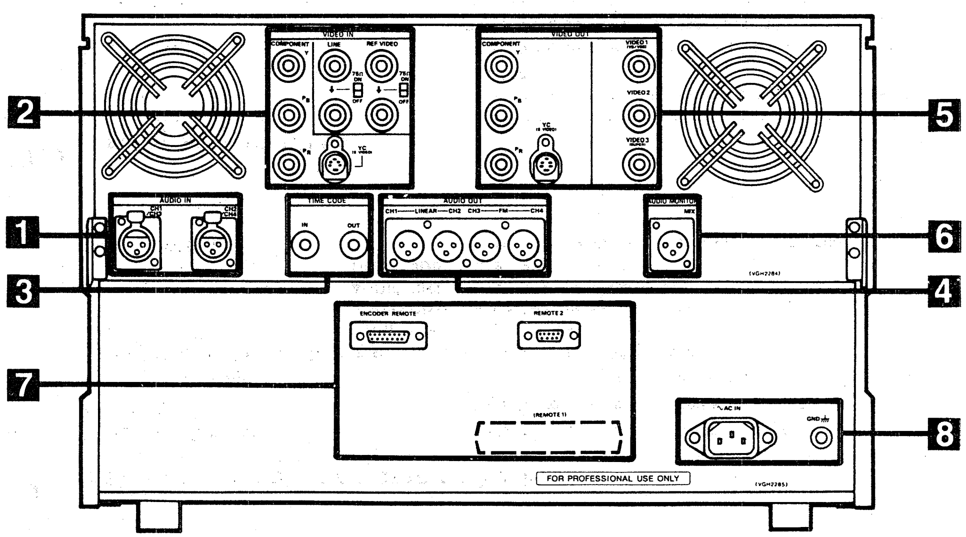
1
2
3
4
5
6
7
8
VIDEO IN
COMPONENT
LINE
REF VIDEO
YC
VIDEO OUT
VIDEO 1
VIDEO 2
VIDEO 3
AUDIO IN
CH1
CH2
TIME CODE
IN
OUT
AUDIO OUT
CH1 LINEAR CH2 CH3 FM CH4
AUDIO MONITOR
MIX
ENCODER REMOTE
REMOTE 2
(REMOTE 1)
AC IN
GND
FOR PROFESSIONAL USE ONLY

The above illustration shows the AU-65 as seen from the rear.

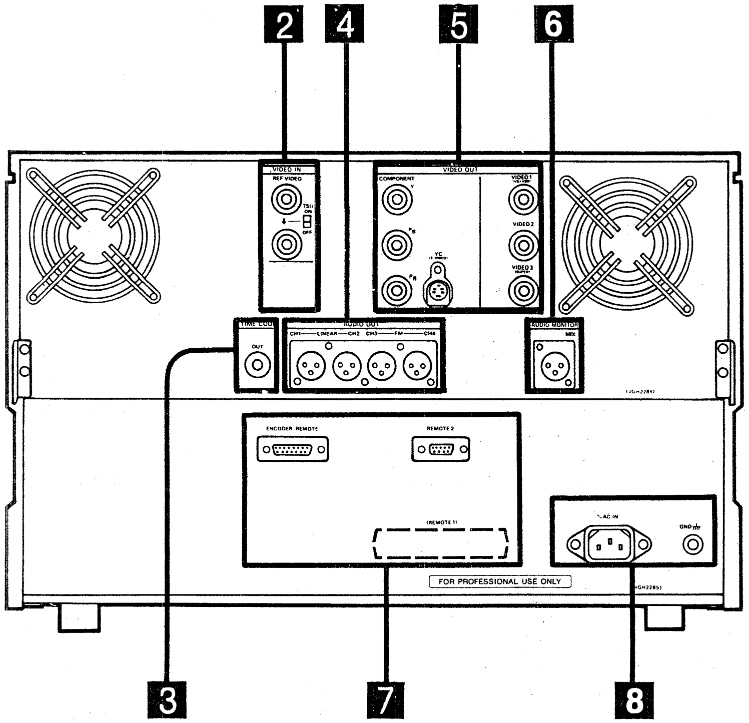
2
4
5
6
3
7
8
VIDEO IN
REF VIDEO
VIDEO OUT
COMPONENT
YC
VIDEO 1
VIDEO 2
VIDEO 3
TIME CODE
OUT
AUDIO OUT
CH1 LINEAR CH2 CH3 FM CH4
AUDIO MONITOR
MIX
ENCODER REMOTE
REMOTE 2
(REMOTE 1)
AC IN
GND
FOR PROFESSIONAL USE ONLY

The above illustration shows the AU-62/63 as seen from the rear.

1 AUDIO IN signal area on AU-65

AUDIO CH1/3 Input Connector:	This is the CH1/3 audio input connector.
AUDIO CH2/4 Input Connector:	This is the CH2/4 audio input connector.

2 VIDEO IN signal area

COMPONENT Connectors: **(AU-65 only)**	The component signals (Y, PB and PR) are supplied separately to these input connectors.
LINE IN Input Connectors: **(AU-65 only)**	The composite video signal is supplied to these input connectors (which come with loop-through 75-ohm terminating switch).
YC Input Connector: (AU-65 only)	This is the input connector for the YC (S-VIDEO) signal.
REF VIDEO IN Connectors:	The reference signal is supplied to these input connectors (which come with loop-through 75-ohm terminating switch).

3 Time code signal area

TIME CODE Input Connector: **(AU-65 only)**	The time code signal is supplied to this input connector.
TIME CODE Output Connector:	The time code signal is output from this output connector.

4 AUDIO OUT signal area

LINEAR AUDIO CH1/CH2 Output Connectors:	These are the output connectors for the CH1 and CH2 audio signals.
FM AUDIO CH3/CH4 Output Connectors:	These are the output connectors for the CH3 and CH4 audio signals.

5 VIDEO OUT signal area

YC (S-VIDEO) Output Connector:	The YC (S-VIDEO) signal is output from this connector.
COMPONENT Output Connectors:	The component signals (Y, PB and PR) are output separately from these connectors.
VIDEO 1 Output Connector:	The video signal with sync (VBS) or without sync—depending on the position selected by the circuit board (W2 encoder board) switch—is output from this connector.
VIDEO 2 Output Connector:	The composite signal is output from this connector.
VIDEO 3 Output Connector:	Depending on the setting of the SUPER switch on the B1.SYSTEM CONTROL board, the VTR operating mode, time code or control signal can be superimposed.

6 AUDIO MONITOR signal area

- L, R or MIX sound is output, depending on the setting of the AUDIO MONITOR switch.

AUDIO MONITOR MIX Output Connector:	The L, R and MIX sound is output from this connector.

7 Remote signal area

REMOTE 2 (9P) Connector:	RS-422A serial remote connector
REMOTE 1 (50P) Connector:	Terminal window for using the optional 50-pin parallel remote connector. Set the front panel CONTROL switch to "REMOTE" and the front sub-panel REMOTE switch to "1".
ENCODER REMOTE Connector:	This is used for the remote control of the internal encoder from an external device.

8 Power supply area

AC IN Socket:	Use the accessory power cord to connect this socket with the power outlet.
GND Terminal:	Be sure to connect this to ground when this unit is connected with another component.

Front Sub-Panel

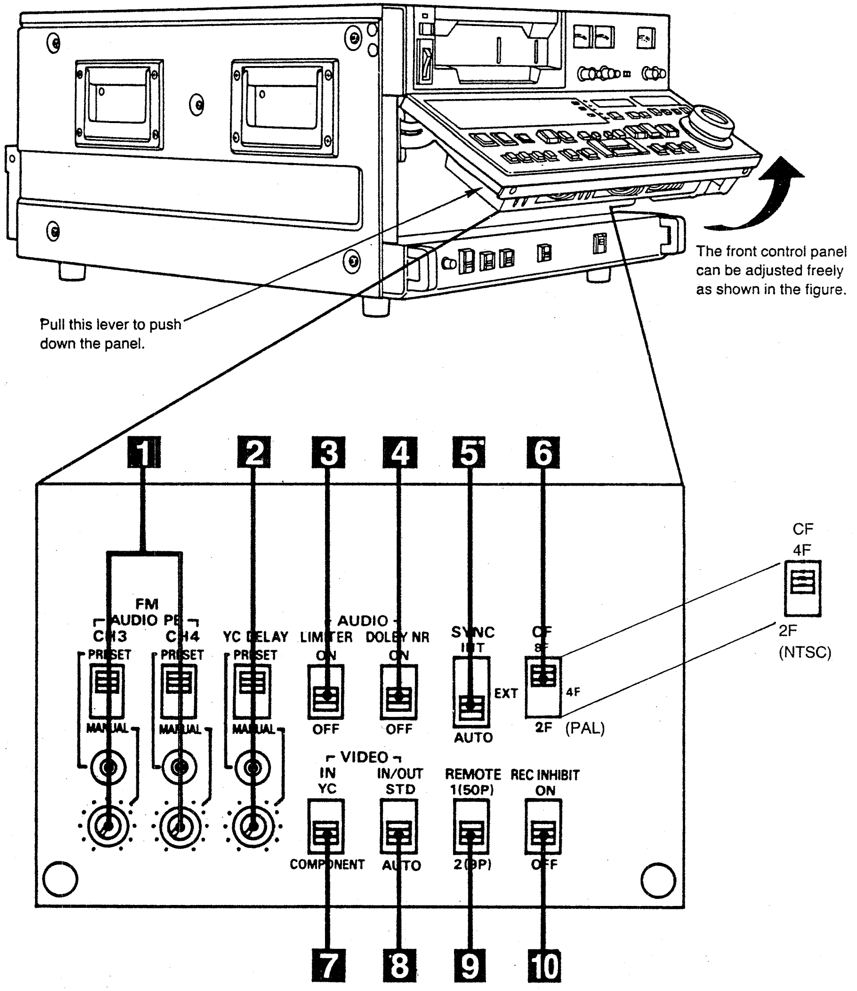

Pull this lever to push down the panel.

The front control panel can be adjusted freely as shown in the figure.

1 **FM AUDIO (CH3/CH4) PB Switches/Controls:**
PRESET: The playback level of the FM sound is set to the preset status.
MANUAL: The playback level of the FM sound can be adjusted as desired.

2 **YC DELAY Switches/Controls:**
PRESET: The YC timing is set to the preset status.
MANUAL: The YC timing can be adjusted as desired.

3 **AUDIO LIMITER Switch:**
(AU-65 only)
This works for linear audio signals only.
ON: The volume limiter circuit is activated when the input signal level is excessively high.
OFF: The audio signals are recorded at their original level.

4 **DOLBY NR Switch:**
ON/OFF switch for Dolby C Noise Reduction. (This works only for linear audio signals.)

5 **SYNC Switch:**
(AU-65 only)
This selects the servo reference signal.
INT: Synchronizes the servo with the internal reference signal during normal playback.
EXT: Synchronizes the servo with the external reference signal.
AUTO: Synchronizes the servo with the video input signal during recording and editing, and with the external reference signal during playback.

6 **CF Switch:**
This selects the colour framing mode during editing and playback.
8F: For recording, playback and editing in 8-field units. (PAL only)
4F: For recording, playback and editing in 4-field units. VISC control is performed.
2F: For recording, playback and editing in 2-field units.

7 **VIDEO IN Switch:**
(AU-65 only)
This selects COMPONENT or YC as the video input signal.
YC: For YC signal input.
COMPONENT: For component signal input.

8 **VIDEO IN/OUT Switch:**
(AU-65 only)
STD: For supplying a regular composite signal through the time base corrector (TBC).
AUTO: For automatically identifying whether the signal has passed through the TBC or not.

9 **REMOTE Switch:**
1 (50P): When using an optional REMOTE 1 (50P) connector
2 (9P): When using the REMOTE 2 (9P) connector

10 **REC INHIBIT Switch:**
(AU-65 only)
ON: The REC INHIBIT lamp lights to indicate that recording is inhibited.
OFF: Signals can be recorded at this position.

SYSTEM CONTROL Board

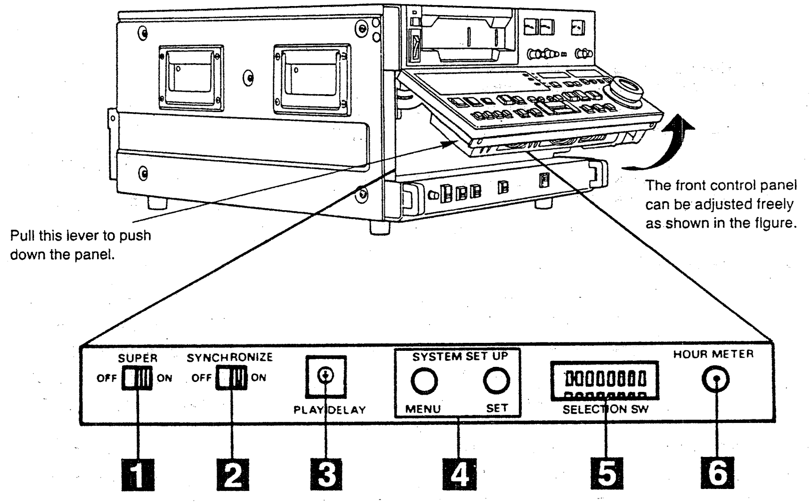

Pull this lever to push down the panel.

The front control panel can be adjusted freely as shown in the figure.

1 **SUPER Switch:** This is the ON/OFF switch for superimposing time code, status or other character signals onto the signal which is output from the VIDEO 3 connector.

2 **SYNCHRONIZE Switch:**
(AU-65 only) When this is set to ON, operation will be synchronized when controlling the player in an editing system where this unit is serving as the recorder.

3 **PLAY DELAY Switch:** This sets the duration (in frame units) of the transition from the stop mode to the play mode. Any value from 0 to 15 can be set.

4 **SYSTEM SET UP Buttons:** These are used when the unit's set-up is to be changed.

5 **SELECTION SW:** Not used. (All switches are set to OFF.)

6 **HOUR METER Button:** When this is pressed, the accumulated values for the "Total power ON time" and "Drum rotation time" appear on the display and on-screen.

Display indication

```
P00000H  D00000H
```

On-screen display

```
POWER  ON  00000HOURS
DRUM   ON  00000HOURS
```

OPTION USED!

TCG/TCR Board

The time code/user bits operations can be performed when the optional AU-F65 time code generator/reader is installed in the unit.

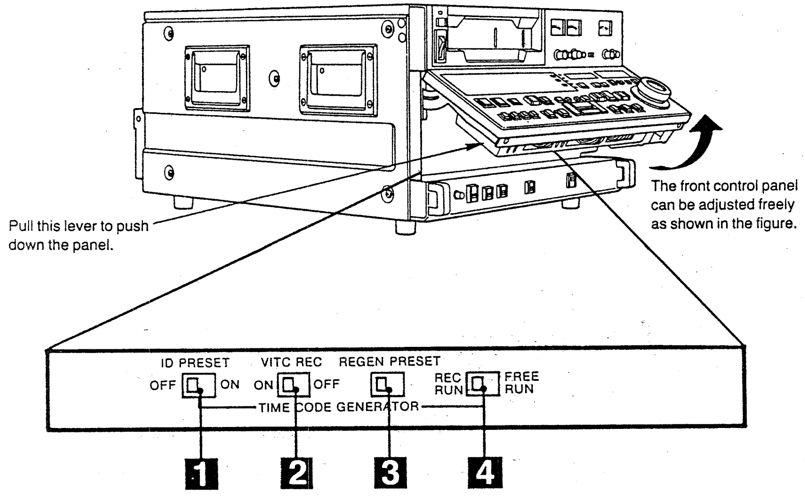

Pull this lever to push down the panel.

The front control panel can be adjusted freely as shown in the figure.

1 **ID PRESET Switch:**

ON: For setting the ID code.
OFF: For setting the normal user bits value.

2 **VITC REC Switch:**

ON: For recording the new VITC value onto tape.
OFF: The new VITC value is not recorded.

3 **REGEN/PRESET Switch:**

REGEN: For synchronizing the internal user bits with the external user bits.
PRESET: For using the internal user bits.

4 **REC RUN/FREE RUN Switch:**

REC RUN: The time code runs only during recording.
FREE RUN: The time code runs in real time, regardless of the operating mode of the VTR.

Preset Panel

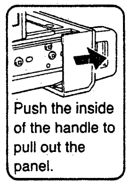
Push the inside of the handle to pull out the panel.

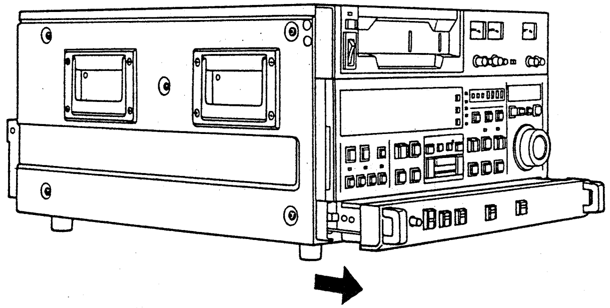

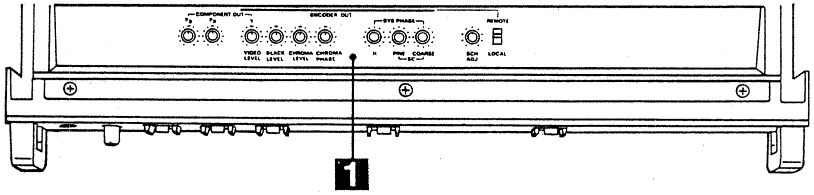

1 ENCODER OUT control area

PB/PR Controls:		These adjust the level of the COMPONENT output signals.
VIDEO LEVEL Control:		This adjusts the level of all the video signals except the sync and burst.
BLACK LEVEL Control:		This adjusts the black level.
CHROMA LEVEL Control:		This adjusts the chroma level.
CHROMA PHASE Control:		This adjusts the chroma phase.
SYS H PHASE Control:		This adjusts the system H phase.
SYS SC Controls:		These adjust the system SC phase.
	FINE:	For the continuous adjustment in a just over 90° range; 360° coverage.
	COARSE:	For adjustment in 4 steps of 90° each.
SCH ADJ Control:		This adjusts the SC phase in relation to the sync signal supplied from the VIDEO output connector.
REMOTE/LOCAL Switch:		
	REMOTE:	For adjusting the encoder from an external unit.
	LOCAL:	For adjusting the encoder using this unit. LOCAL is automatically selected even if the REMOTE position has been set if the rear panel ENCODER REMOTE connector has not been connected.

Circuit Boards

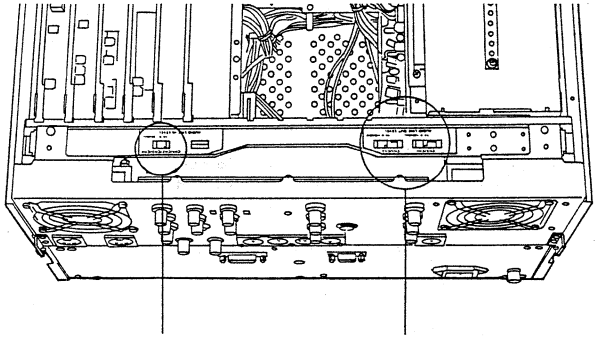
AUDIO LINE IN LEVEL switch
(AU-65 only)

AUDIO LINE OUT LEVEL switch

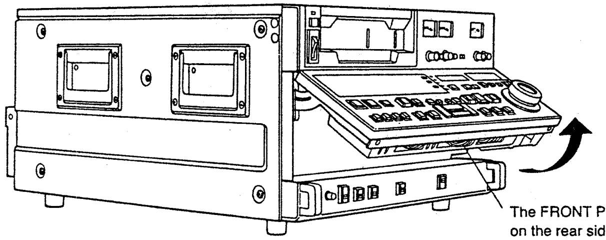
The FRONT PANEL circuit board is on the rear side of the front panel.

CAUTION: TO REDUCE THE RISK OF FIRE OR SHOCK HAZARD, REFER CHANGE OF SWITCH SETTING INSIDE THE UNIT TO AUTHORIZED SERVICE PERSONNEL.

AU-65 (NTSC) only

Circuit board	Abbreviation	Full name	Description	Shipment mode
W1 Board	SW4	V-blanking selector switch	Blanks the video signal during the V-blanking interval (blanking when in ON position). 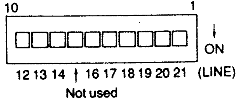 10 1 ON 12 13 14 16 17 18 19 20 21 (LINE) Not used When the unit is used as a player during editing, if the VITC insert line position on the tape differs from the settings of the editor, set these switches ON to blank the VITC insert line.	ALL OFF
	SW7		Factory adjustment switch	ON
	SW201	Frame detection switch	Detects the input video frame. ON: Frame detection always occurs. OFF: Frame detection is inhibited when the input signal is non-standard signal.	ON
	SW203	VIDEO phase switch	Used for video phase adjustment.	6/7/8
W2 Board	SW201	SYNC ON/OFF switch	To select whether a SYNC signal is added to the VIDEO OUT 1 output signal. ON: SYNC signal is added. OFF: SYNC signal is not added.	ON
W3 Board	SW1	VIDEO/SYNC meter selector switch	Selecting VIDEO meter.	VIDEO
	SW201	C CLAMP PULSE selector switch	Used only during pre-check (for factory adjustment).	NOT TEST
	SW202	C REC BPF adjustment switch	Used only for adjustments (factory adjustments).	NOT TEST
	SW301	Y PB EQ checking switch	For checking Y PB EQ (for factory adjustments).	ON
	SW302	Y, G • D adjustment switch	Used only for adjustments (factory adjustments).	ON
	SW304	Y super limiter ON/OFF switch	ON/OFF of Y super limiter (for factory adjustments).	ON
	SW701	C PB EQ checking switch	For checking C PB EQ (for factory adjustments).	ON
	SW702	C, G • D adjustment switch	Used only for adjustments (factory adjustments).	ON
	SW704	C super limiter ON/OFF switch	ON/OFF of C super limiter (for factory adjustments).	ON
	VR315 VR316	C CH1/CH2 Playback frequency equalizing adjustment volume	Used only for adjustements (factory adjustments)	——
	VR712 VR713	Y CH1/CH2 Playback frequency equalizing adjustment volume	Used only for adjustements (factory adjustments)	——

AU-65 (NTSC) only

Circuit board	Abbreviation	Full name	Description	Shipment mode
W4 Board	SW201	——	NORM: Carrier leak cancel chroma VDL operation ON. ADJ: Carrier leak cancel chroma VDL operation OFF. (For factory adjustments)	NORM
	SW701	——	NORM: Warbling operation ON. ADJ: Warbling operation OFF. (For factory adjustments)	NORM
W5 Board	SW3	AUTO H PHASE switch	Used during editing to prevent skew of the video signal at the edit point. ON: AUTO H PHASE mode is activated. OFF: AUTO H PHASE mode is not activated.	ON
AUDIO I/O Board	SW101	AUDIO LINE IN LEVEL SW	Used to set the audio input levels of CH1 to 4. −20/0/+4 dBm (See Note)	+4 dBm
	SW102	AUDIO LINE OUT LEVEL SW	Used to set the audio output level of CH1/2. −20/0/+4 dBm (See Note)	+4 dBm
	SW302	AUDIO LINE OUT LEVEL SW	Used to set the audio output level of CH3/4. −20/0/+4 dBm (See Note)	+4 dBm
Front Panel	SW1	Preroll Time Select Switch	The preroll time can be selected by setting SW1 in the following manner. 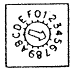 SW1: 0 1 2 3 4 5 6 7 8 9 A B C D E F Preroll time (sec.): 0 1 2 3 4 5 6 7 8 9 10 11 12 13 14 15	5 sec.
	SW2-2	"NEGATIVE" Indication Select Switch	Whether to indicate "NEGATIVE" on the front display when the OUT point is entered that precedes the already entered IN point. ON: Indicate "NEGATIVE" on the display. OFF: Non indicate.	OFF
	SW4-1	Remaining Time Indication Select Switch	To select whether to indicate the tape remaining time on the front display. ON: Tape remaining time is indicated when Block 3 in the display is blank. OFF: Tape remaining time is always indicated in Block 3.	OFF
	SW4-2	TSO Select Switch (use for connecting to other VTR)	Selection of TSO depending on the connected VTR. ON: TSO functions exclusively for AU-650 and AU-620. OFF: TSO functions exclusively for AU-60, AU-65, AU-640, AU-650B and AU-660. (±15% max. in each ±1% step)	OFF

AU-63/62 (NTSC) only

PCB	SW no.	Name	Function	Initial setting
W1 PCB TBC & SYNC GEN	SW203	VIDEO phase switch	This adjusts the video phase.	6/7/8
	SW204	V Blanking select switch		ALL OFF
W2 PCB ENCODER	SW201	SYNC ON/OFF switch	The SYNC signal is added to the VIDEO OUT 1 output signal. ON: SYNC signal is added. OFF: SYNC signal is not added.	ON
W3 PCB: DEMOD	SW1	VIDEO/SYNC meter switch	Selects the video meter mode.	VIDEO
W6 PCB: AUDIO I/O	SW102	AUDIO LINE OUT LEVEL switch	This sets the CH1/2 AUDIO output level (+4/0/−20 dBm).	+4 dBm
	SW302	AUDIO LINE OUT LEVEL switch	This sets the CH3/4 AUDIO output level (+4/0/−20 dBm).	+4 dBm
FRONT PANEL PCB	SW1	Preroll time switch	SW1 selects the preroll time.	5 sec.
	SW2-1	Remaining tape display switch	Selects whether the remaining time is to be indicated on the display. ON: Display OFF: No display	OFF
	SW2-2	DF/NDF switch	Selects CTL display drop frame (DF) or non-drop frame (NDF) mode. ON: NDF OFF: DF	OFF
	SW2-3	TSO switch	Select the tape speed override (TSO) according to the machine connected. ON: TSO for AU-650, AU-620 only OFF: TSO for AU-60, AU-65, AU-640, AU-660 only TSO can be varied in 1% increments up to ±15%.	OFF

AU-65 (PAL) only

PCB	SW No.	Switch	Function	Initial setting
W1 PCB TBC & SYNC GEN	SW201	Frame detection switch	Detects the video input frame when there is no TBC. ON: Detection takes place. OFF: Detection is inhibited.	ON
	SW203	VIDEO phase switch	Adjusts the video phase.	9
	SW204	V Blanking select switch	10 ON OFF ☐ 8 Line ☐ 9 Line ☐ 10 Line ☐ 11 Line ☐ Not used ☐ 13 Line ☐ 14 Line ☐ 15 Line ☐ 16 Line ☐ 17 Line 1 When the unit is used as a player during editing, if the VITC insert line position on the tape differs from the settings of the editor, set these switches ON to blank the VITC insert line. Blanks the video signal during the V-blanking interval (blanking when in ON position).	ALL OFF
	SW205		4 ☐ 18 Line ☐ 19 Line ☐ 20 Line ☐ 21 Line 1	
	SW8		☐ 7 Line	
W2 PCB ENCODER	SW201	SYNC ON/OFF switch	Adds the SYNC signal to the VIDEO OUT 1 output signal. ON: SYNC signal is added. OFF: SYNC signal is not added.	ON
W3 PCB MOD & DEMOD	SW1	VIDEO/SYNC meter switch	Selects VIDEO meter.	VIDEO
	SW305	AUTO EQ VAR	Makes the automatic equalizer level adjustable when SW306 is ON. ON: Adjustment possible. OFF: Preset position (fixed level)	OFF
	SW306	AUTO EQ SW	Makes the frequency response constant despite variations in burst level (automatic equalizer). ON: The automatic equalizer is activated. OFF: The automatic equalizer is not activated.	OFF
AUDIO I/O PCB	SW101*	AUDIO LINE IN LEVEL switch	Sets the CH1/2/3/4 audio input level. −20/0/+4 dBu	0 dBu
	SW102/ 302	AUDIO LINE OUT LEVEL switch	Sets the CH1/2 (SW102) or CH3/4 (SW302) audio output level. −20/0/+4 dBu	0 dBu

AU-65 (PAL) only

PCB	SW No.	Switch	Function	Initial setting
FRONT PANEL	SW1	Preroll time switch	This selects the preroll time to any value from 0 to 15 seconds.	5 sec.
	SW2-1	Not used	———	OFF
	SW2-2	NEGATIVE display switch	This selects whether "NEGATIVE" is to be indicated on the display when the IN point is equal to, or less than, the OUT point during edit point entry. ON: "NEGATIVE" appears in block 2. OFF: "NEGATIVE" does not appear.	OFF
	SW4-1	Remaining tape display switch	This selects whether the remaining tape is to be indicated on the display. ON: Displayed when block 3 is empty. OFF: Displayed all the time.	OFF
	SW4-2	TSO switch	Selects TSO in accordance with the connected machine. ON: TSO for AU-650, AU-620 only. OFF: TSO for AU-750, AU-650B, AU-65, AU-630, AU-640 only (This can be changed in 1% steps up to ±15%.)	OFF
	SW4-3~4-6	Not used	———	OFF
	SW4-7	Forced EE selector switch	This selects the forced EE mode during tape eject. ON: EE mode is set all the time regardless of the MODE switch position. OFF: Mode corresponds to MODE switch setting.	OFF

AU-63/62 (PAL) only

PCB	SW no.	Name	Function	Initial setting
W1 PCB TBC & SYNC GEN	SW203	VIDEO phase switch	This adjusts the video phase.	9
	SW204	V Blanking select switch	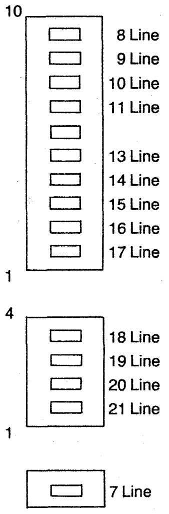 10 8 Line 9 Line 10 Line 11 Line 13 Line 14 Line 15 Line 16 Line 17 Line 1 4 18 Line 19 Line 20 Line 21 Line 1 7 Line	ALL OFF
	SW205			
	SW8			
W2 PCB ENCODER	SW201	SYNC ON/OFF switch	The SYNC signal is added to the VIDEO OUT 1 output signal. ON: SYNC signal is added. OFF: SYNC signal is not added.	ON
W3 PCB: DEMOD	SW1	VIDEO/SYNC meter switch	Selects VIDEO meter mode.	VIDEO
	SW305	AUTO EQ VAR	Makes the automatic equalizer level adjustable when SW306 is ON. ON: Adjustment possible. OFF: Preset position (fixed level)	OFF
	SW306	AUTO EQ SW	Makes the frequency response constant despite variations in burst level (automatic equalizer). ON: The automatic equalizer is activated. OFF: The automatic equalizer is not activated.	OFF

AU-63/62 (PAL) only

PCB	SW no.	Switch	Function	Initial setting
W6 PCB: AUDIO I/O	SW102	AUDIO LINE OUT LEVEL switch	This sets the CH1/2 AUDIO output level +4/0/−20 dBu).	0 dBu
	SW302	AUDIO LINE OUT LEVEL switch	This sets the CH3/4 AUDIO output level (+4/0/−20 dBu).	0 dBu
FRONT PANEL PCB	SW1	Preroll time switch	SW selects the preroll time.	5 sec.
	SW2-1	Remaining tape display switch	Selects whether the remaining time is to be indicated on the display. ON: Display OFF: No display	OFF
	SW2-2	——	——	OFF
	SW2-3	TSO switch	Select the tape speed override (TSO) according to the machine connected. ON: TSO for AU-650, AU-620 only OFF: TSO for AU-60, AU-65, AU-640, AU-660 only TSO can be varied in 1% increments up to ±15%.	OFF

CAUTION: TO REDUCE THE RISK OF FIRE OR SHOCK HAZARD, REFER CHANGE OF SWITCH SETTING INSIDE THE UNIT TO AUTHORIZED SERVICE PERSONNEL.

The audio output levels set by the AUDIO LINE OUT LEVEL (+4/0/−20 dBu) switches apply when the VU meter pointer shows 0 VU.

Operation Method of Dial Menu Functions

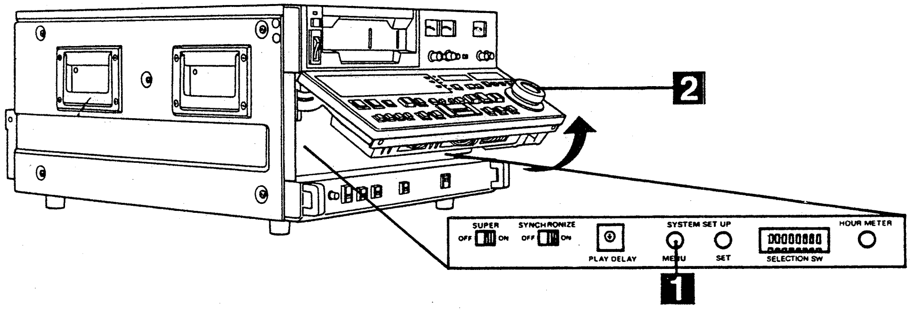
2
SUPER
OFF ON
SYNCHRONIZE
OFF ON
PLAY DELAY
SYSTEM SET UP
MENU
SET
SELECTION SW
HOUR METER
1

1 Press the MENU button on the B1. SYSTEM CONTROL board.

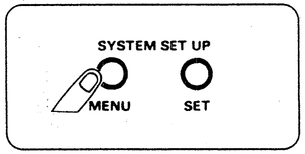
SYSTEM SET UP
MENU
SET

SETUP-MENU NO. 1001

01 STILL TIME SELECT
02 TAPE PROTECTION SELECT
03 READY OFF MODE SELECT
04 SHTL DIAL MODE SELECT
06 SHTL MAX SPEED SELECT
07 VTR MODE AT TAPE END
11 STD/NON-STD SELECT

Superimpose display

The picture below appears on the monitor.
(If changes were made previously to the set-up, the screen will show the last such change.)

Display

S E T U P — M E N U
N O. 1 0 0 1

2 Turn the search dial and find the setting item.

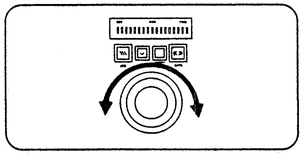

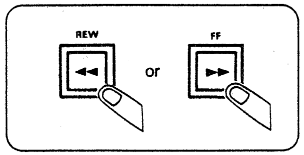

When the dial is rotated clockwise, the setting items are successively incremented (1001→1002→1003, etc.); conversely, when it is rotated counterclockwise, they are decremented.

Press the FF (page up) or REW (pack down) button to change the set-up menu in page units.
The set-up menu changes page by page.

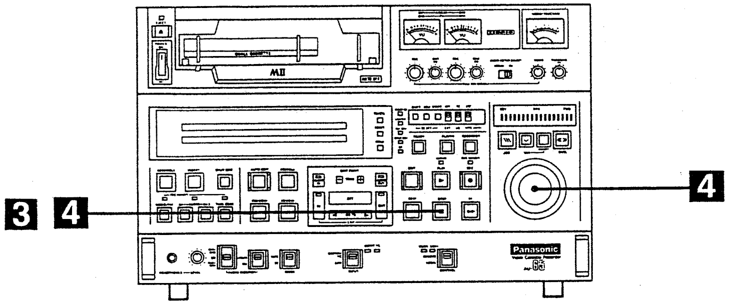
3
4
4
Panasonic

3 Press the STOP button at the desired item.

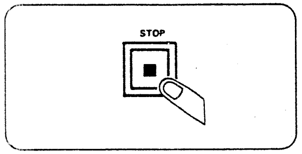

SETUP-MENU NO. 1001-1
STILL TIME SELECT
5 SEC

Superimpose display

The set-up display, such as that below, will appear on the screen for as long as the STOP button is held down.

Display

S E T U P — M E N U
N O. 1 0 0 1 — 1

4 Turn the search dial while holding down the STOP button.

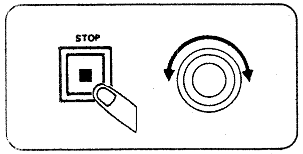

SETUP-MENU NO. 1001-3
STILL TIME SELECT
30 SEC

Superimpose display

The flashing display changes. Set to the desired value.

Display

S E T U P — M E N U
N O. 1 0 0 1 — 3

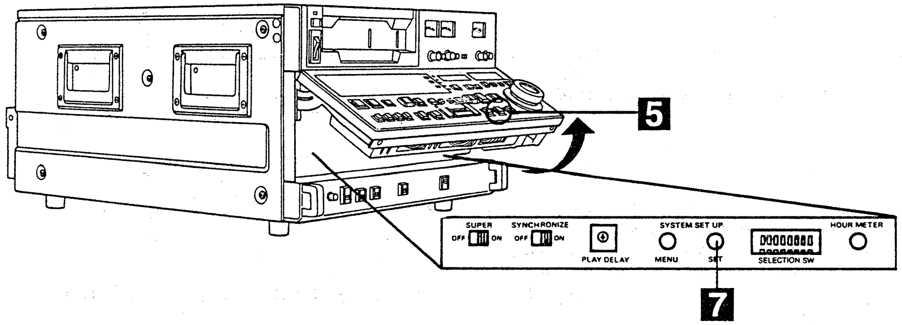

5 Release the STOP button.

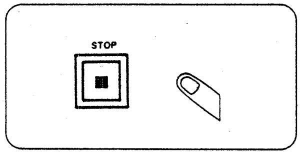

The set-up menu display returns to the screen.

6 Repeat steps 3 to 5.

Set all the set-up items to be changed to the desired values.

7 Press the SET button on the B1. SYSTEM CONTROL board.

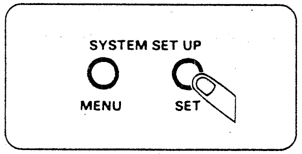

Upon completion of the setting, press the SET button on the B1. SYSTEM CONTROL board.
The set-up changes are stored in the memory.

REFERENCE

- **To terminate operation in the mode without storing the settings in the memory:**
  Press the MENU button on the B1. SYSTEM CONTROL board.
- **To return the set-up to the initial settings (set at the factory):**
  Press the RESET button while the set-up menu is displayed. The following message will now appear.

```
SETUP-MENU     INIT. SET OK?
                (PUSH PLAY KEY)
```

The original settings are restored when the PLAY button is pressed.

Set-up Menus

Operation/function set-up items

[The shading denotes the initial setting.]

Item		Set-up value		Description of function
No.	Superimpose display	No.	Superimpose display	
1001	STILL TIME SELECT	00 01 02 03 04 05 06 07	0.5 SEC 5 SEC 10 SEC 30 SEC 1 MIN 3 MIN 5 MIN 10 MIN	When the unit is left in the STOP or STILL mode, this selects the duration of time after which the unit is automatically placed in the TAPE PROTECTION mode in order to protect the tape.
1002	TAPE PROTECTION SEL	00 01	T. RELEASE READY OFF	This selects the operation in the tape protection mode. 00: Tape tension release 01: Ready OFF mode (in conformity with No.1003)
1003	READY OFF MODE SELECT	00 01 02	DRUM ROTATE DRUM STOP UNLOADING	Selects the operation in the READY OFF mode. 00: Drum rotates. 01: Drum stops rotating. 02: Unloading
1004	SHTL DIAL MODE SELECT	00 01 01	DIRECT SHTL PRESET VAR **(AU-65/63)** **NON-DIRECT (AU-62)**	Selects the operation mode for the dial in any mode except shuttle. 00: Direct shuttle mode 01: Preset variable **mode/Non direct (AU-62)**
1006	SHTL MAX SPEED SELECT	00 01	*32 *16	Selects the maximum search speed in the shuttle mode. 00: 32x normal tape speed 01: 16x normal tape speed
1007	VTR MODE AT TAPE END	00 01	STOP AUTO REW	Selects the operation after the tape-end has been detected. 00: Stop 01: Automatic rewinding to start
1011	STD/NON-STD SELECT	00 01	FRONT SWITCH NON-STD	Selects whether to forcibly establish the NSTD mode regardless of the position of the VIDEO IN/OUT switch on the front sub-panel. 00: As per position set by VIDEO IN/OUT switch. 01: NSTD mode is forcibly established.
1012 PAL only	VISC CONTROL SELECT	00 01	CONTROLLED NOT CONTROLLED	This uses VISC to align the subcarrier phase of the input video signal and the subcarrier phase of the encoder video output signal. (It is effective only during normal playback with CF SW 4F or 8F.) 00: VISC control 01: No VISC control

Superimpose set-up items

[The shading denotes the initial setting.]

Item		Set-up value		Description of function
No.	Superimpose display	No.	Superimpose display	
2001	CHARACTER BACKGROUND	00 01	Selection is made while observing superimposed display.	Selects the type of characters for the VIDEO 3 superimpose display. 00: Black display LTCR **:**:**:**. 01: Edge display LTCR **:**:**:**
2002	CHARACTER H-POSITION	00 01 02 03 04 05 06 07	Selection is made while observing superimposed display.	Selects horizontal position for VIDEO 3 superimpose display; moves characters towards right as NO. is increased. 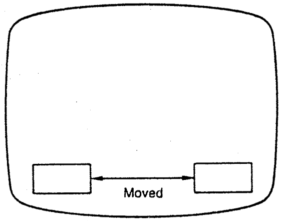
2003	CHARACTER V-POSITION	00 01 02 03 04 05 06 07	Selection is made while observing superimposed display.	Selects vertical position for VIDEO 3 superimpose display; moves characters down as NO. is increased. 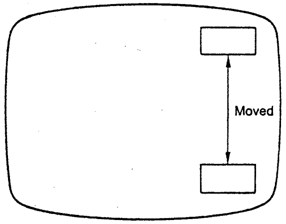
2004	STATUS SUPER	00 01	OFF ON	Selects whether VTR operation mode is to be indicated as a superimposed display of VIDEO 3 output signal.

Remote set-up items

[The shading denotes the initial setting.]

Item		Set-up value		Description of function
No.	Superimpose display	No.	Superimpose display	
3001	REMOTE OPERATION SEL	00 01 02 03	SEPARATE LOCAL+REMOTE BOTH REMOTE ALL OPERATION	Selects connector which can be controlled when REMOTE switch is at REMOTE position. 00: Selected by CONTROL switch 01: Control panel and connector selected 02: REMOTE 1 and REMOTE 2 03: All operations possible
3002	EJECT/STOP FNCTN REM.	00 01	POSSIBLE NOT POSSIBLE	Selects operation of panel EJECT/STOP button in remote mode. 00: Enables operation. 01: Disables operation.
3003	50P STOP STATUS SEL	00 01	FLASHING NOT FLASHING	Selects whether or not to indicate by flashing the STOP status signal which is supplied to 50-pin remote connector in READY-OFF mode. 00: Flashing 01: Not flashing
3004	9P DEVICE TYPE SELECT	00 01 02	OTHER TYPEs 1 OTHER TYPEs 2 M2 ID	Selects ID code returned in response to 9P device type request command when control is exercised using 9-pin remote connector. 00: 1100 (BVU-800) 01: 2125 (SONY 1") 02: MII
3005	VTR ADDRESS	00 01 02 03 04 05 06 07 08 09 10 11 12 13 14 15	A (8880) B (8882) C (8884) D (8886) E (8888) F (888A) G (888C) H (888E) I (88C0) J (88C2) K (88C4) L (88C6) M (88C8) N(88CA) O (88CC) P (88CE)	Sets identification number of each VTR when VTRs are connected to a multi-drop system through an RS-422 (9-pin) serial bus under the control of a special controller. This setting is effective starting from the time when the power is next switched ON.

Editing set-up items

AU-65 only

[The shading denotes the initial setting.]

Item		Set-up value		Description of function
No.	Superimpose display	No.	Superimpose display	
4001	CF ADJUSTMENT SELECT	00 01	TO PLAYER TO RECORDER	Selects the VTR which is to be adjust the entered points for VTR-to-VTR editing. (0 to +3 frame) 00: The points on the player tape are adjusted. 01: The points on the recorder tape are adjusted.
4002	EDIT FIELD SELECT	00 01	ODD EVEN	Selects the start field for editing. 00: Start with odd number field 01: Start with even number field
4003	AUTO PREROLL ENTRY	00 01	NOT ENTERED ENTERED	Selects whether to enter the IN point by pressing the pre-roll button when the IN point has not been entered. 00: Entered 01: Not entered

Colour framing set-up items

[The shading denotes the initial setting.]

Item		Set-up value		Description of function
No.	Superimpose display	No.	Superimpose display	
5004	CF SELECT AT Pb OUT	00 01 02	AUTO OFF ON	Selects whether to add the colour framing ID to the COMPONENT PB OUT connetor signal. 00: Forcibly added when the composite video input signal is recorded in the normal recording or assemble editing mode. Added when CF lamp lights in the playback mode. 01: Not added 02: Added

Time code set-up items

AU-65 only

The optional AU-F65 time code generator/reader is required for these operations.

[The shading denotes the initial setting.]

Item		Setup value			Description of function
No.	Superimpose display	No.	Superimpose display		
			NTSC (Line)	PAL (Line)	
6001	VITC POSITION SEL-1	00	12	8	Selects VITC signal insertion line. *Same line as No. 6001 cannot be selected. Shipment mode: NTSC: 16 Line PAL: 11 Line
		01	13	9	
		02	14	10	
		03	16	11	
		04	17	13	
		05	18	14	
		06	19	15	
		07	20	16	
		08	21	17	
		09	—	18	
		10	—	19	
		11	—	20	
6002	VITC POSITION SEL-2	00	12	8	Selects VITC signal insertion line. *Same line as No. 6001 cannot be selected. Shipment mode: NTSC: 18 Line PAL: 13 Line
		01	13	9	
		02	14	10	
		03	16	11	
		04	17	13	
		05	18	14	
		06	19	15	
		07	20	16	
		08	21	17	
		09	—	18	
		10	—	19	
		11	—	20	
		12	—	21	
6003	TCG REGEN MODE	00 01 02	TC+UB TC UB		Selects regeneration signal when TCG is in REGEN mode. 00: Regenerated for time code and user bits. 01: Regenerated for time code only. 02: Regenerated for user bits only.
6004	REGEN AUTO MODE	00 01 02 03	ASSEM+INSERT ASSEM INSERT TC SWITCH		Selects whether time code is to be regenerated in VTR-to-VTR editing. 00: Regenerated for assemble and insert editing. 01: Regenerated for assemble editing. 02: Regenerated for insert editing. 03: Conforms to time code board setting.
6005	TCG REFERENCE	00 01	AUTO REF		Selects reference signal for time code generator. 00: Automatically selected under same condition as servo reference. 01: Reference video signal serves as reference.

Time code set-up items

The optional AU-F65 time code generator/reader is required for these operations.

[The shading denotes the initial setting.]

Item		Set-up value		Description of function
No.	Superimpose display	No.	Superimpose display	
6006	TC OUT SIGNAL REGEN	00 01	OFF TAPE REGEN	Selects waveform which is output from TIME CODE OUT connector in internal regeneration mode. 00: Outputs playback signals in their original form. 01: Regenerates and outputs playback signals only in servo lock mode.
6007 **AU-65 only**	UB BINARY GROUP FLAG	00 01 10 11	NOT SPECIFIED ISO CHARACTER UNASSIGNED 1 UNASSIGNED 2	Selects mode for using user bits generated by TCG. 00: No character set assigned. 01: 8-bit character set conforming to ISO646, ISO2022. 10/11: Not defined
6008 **AU-65 only**	UB REAL TIME	00 01 02 03	OFF LTC UB VITC UB BOTH	Sets the real time mode for the user bits. 00: No setting 01: Setting for LTC UB only 02: Setting for VITC UB only 03: Setting for both LTC UB and VITC UB
6009	WAKEUP SELECTION	00 01	TC CTL	Selects the time data display when power is ON. 00: TC display 01: CTL display
6010	TCG CF FLAG	00 01	OFF ON	Selects whether CF flag of time code generator is to be set ON. 00: CF flag not set 01: CF flag is set, and time code generator is locked to CF of video signal during recording.

Servo Reference

As the servo reference signal, this unit automatically selects the input video signal which corresponds to the INPUT switch setting, the REF VIDEO signal which is supplied from the REF VIDEO input connector or the internal sync signal (INT).
The relationship between the unit's modes and SYNC switch positions is shown below.

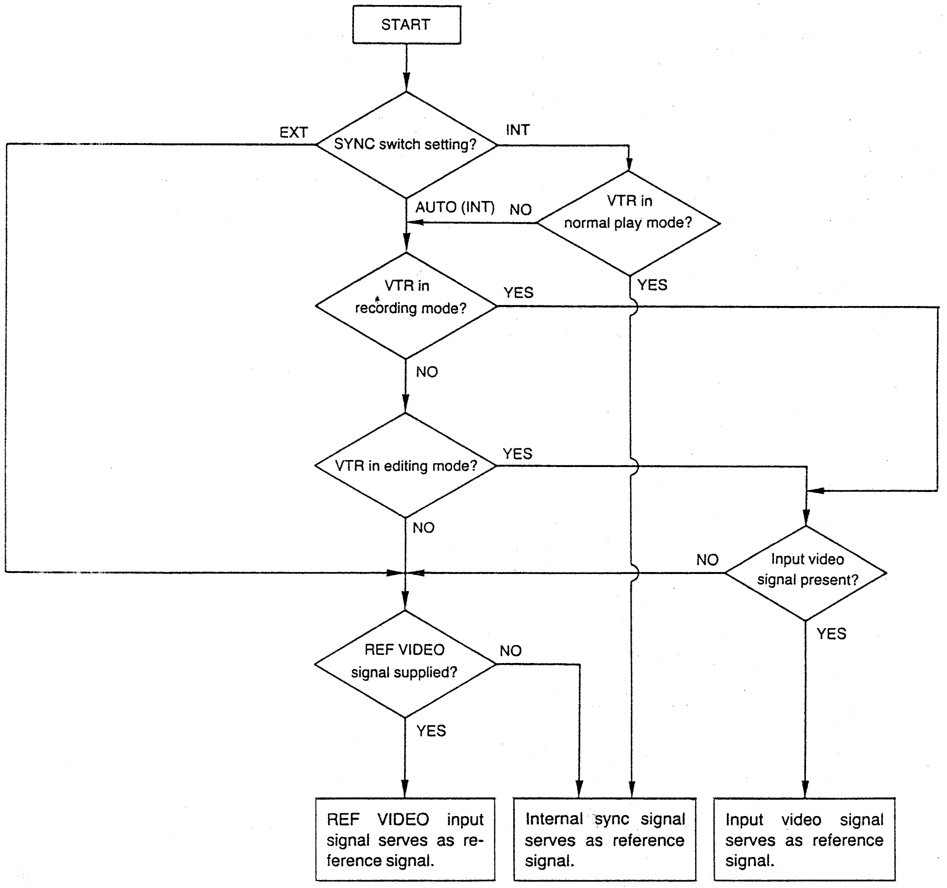
START
SYNC switch setting?
EXT
INT
AUTO (INT)
VTR in normal play mode?
NO
YES
VTR in recording mode?
YES
NO
VTR in editing mode?
YES
NO
Input video signal present?
NO
YES
REF VIDEO signal supplied?
NO
YES
REF VIDEO input signal serves as reference signal.
Internal sync signal serves as reference signal.
Input video signal serves as reference signal.

Servo Reference (cont.)

The TBC must supply the reference signal from an external source under normal circumstances.

•Table of servo reference settings

As shown in the table below, the servo reference signal selected depends on the SYNC switch position, the operation mode of the VTR and whether an input signal is available.

SYNC SW		AUTO				EXT				INT			
VTR MODE		REC		PLAY		REC		PLAY		REC		PLAY	
INPUT VIDEO	REF	EDIT	NOR-MAL	EDIT	NOR-MAL	EDIT	NOR-MAL	EDIT	NOR-MAL	EDIT	NOR-MAL	EDIT	NOR-MAL
YES	YES	VIDEO		VIDEO	REF	*REF				VIDEO		VIDEO	INT
YES	NO	VIDEO		VIDEO	INT	INT				VIDEO		VIDEO	INT
NO	YES	REF		REF	REF	REF				REF		REF	INT
NO	NO	INT		INT	INT	INT				INT		INT	INT

*: The input video signal and REF signal must be synchronized.
This mode is useful if the sync signal on the video is not reliable.

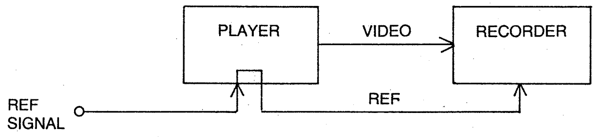
PLAYER
VIDEO
RECORDER
REF SIGNAL
REF

Colour Framing

In an editing system, colour framing serves to synchronize the playback signals perfectly so as to safeguard against picture jumping and phase errors.

1 Colour framing by the LINE and COMPONENT inputs (for recording)

NOTES:

Connect a standard signal to the REF VIDEO and COMPONENT input connectors.
Check that the COMPONENT input PB signal is provided with the CF flag.

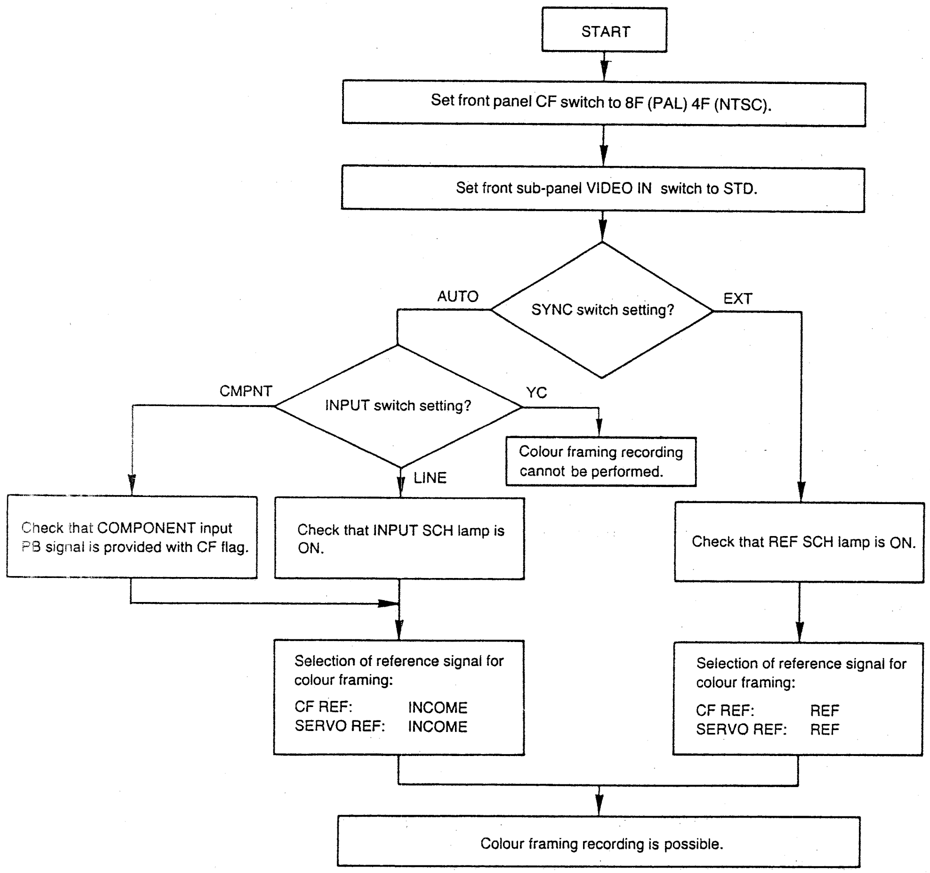
START
Set front panel CF switch to 8F (PAL) 4F (NTSC).
Set front sub-panel VIDEO IN switch to STD.
SYNC switch setting?
AUTO
EXT
INPUT switch setting?
CMPNT
YC
LINE
Colour framing recording cannot be performed.
Check that COMPONENT input PB signal is provided with CF flag.
Check that INPUT SCH lamp is ON.
Check that REF SCH lamp is ON.
Selection of reference signal for colour framing:
CF REF: INCOME
SERVO REF: INCOME
Selection of reference signal for colour framing:
CF REF: REF
SERVO REF: REF
Colour framing recording is possible.

Colour Framing (cont.)

2 Colour framing using EXT TC (for recording)

NOTES:

Connect a component signal without the CF flag.
Connect a time code generator to the EXT TC input.

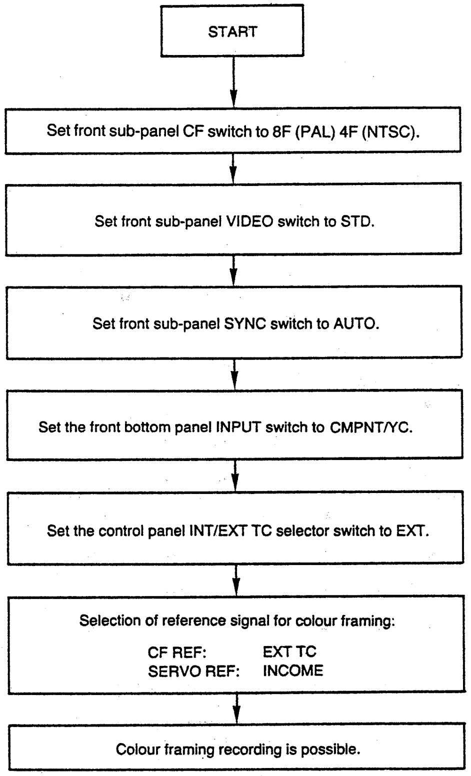
START
Set front sub-panel CF switch to 8F (PAL) 4F (NTSC).
Set front sub-panel VIDEO switch to STD.
Set front sub-panel SYNC switch to AUTO.
Set the front bottom panel INPUT switch to CMPNT/YC.
Set the control panel INT/EXT TC selector switch to EXT.
Selection of reference signal for colour framing:
CF REF: EXT TC
SERVO REF: INCOME
Colour framing recording is possible.

3 Colour framing during playback

NOTE:

Play back a tape which was recorded in the colour framing mode.

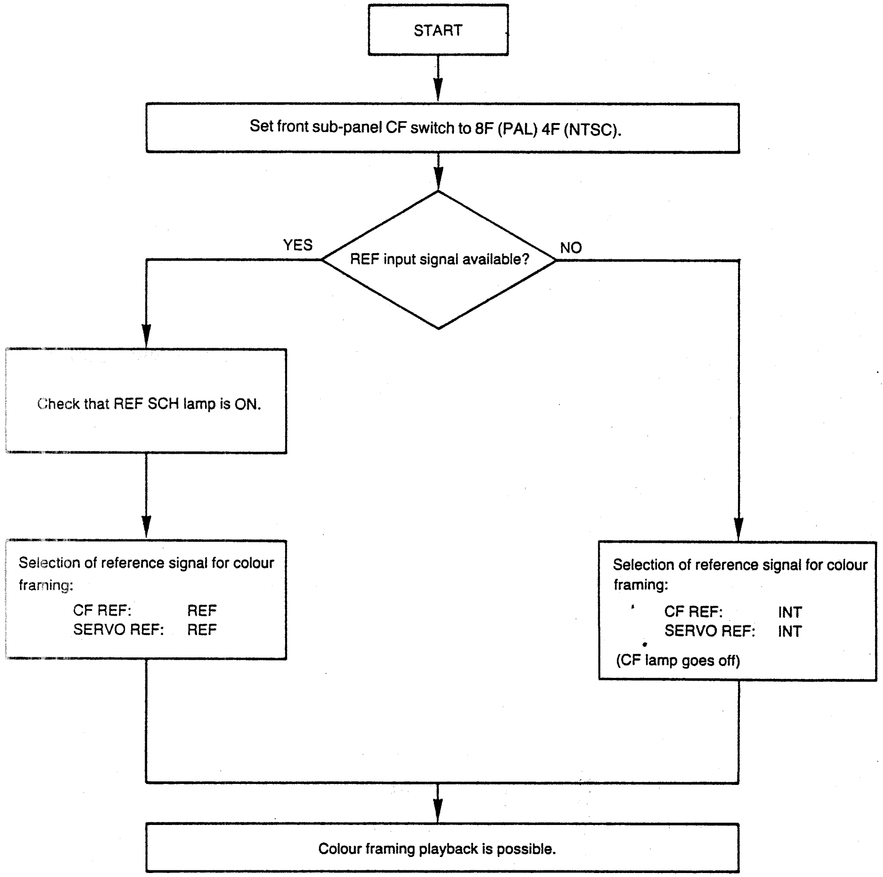
START
Set front sub-panel CF switch to 8F (PAL) 4F (NTSC).
REF input signal available?
YES
NO
Check that REF SCH lamp is ON.
Selection of reference signal for colour framing:
CF REF: REF
SERVO REF: REF
Selection of reference signal for colour framing:
CF REF: INT
SERVO REF: INT
(CF lamp goes off)
Colour framing playback is possible.

REC INHIBIT Table

1 REC INHIBIT Table

Safety tab (slide switch on cassette) position	REC INH switch (switch on back of front panel) position	REC PLAY operation	EDIT operation		Front panel REC INH lamp				Front mode lamp				
			ASSM	INS	REC	V	A	TC	ASSM	INS	V	A	TC
OPEN *1	——	No	No	No	○	○	○	○	■	■	■	■	■
——	ON	No	No	No	○	○	○	○	■	■	■	■	■
CLOSED	OFF	Yes	Yes	Yes	●	●	●	●	□	□	□	□	□
		Yes	Yes	Yes	●	●	●	○	□	□	□	□	■
		Yes	Yes	Yes	●	●	○	●	□	□	□	■	□
		Yes	Yes	Yes	●	●	○	○	□	□	□	■	■
		Yes	No	Yes	●	○	●	●	■	□	■	□	□
		Yes	No	Yes	●	○	●	○	■	□	■	□	■
		Yes	No	Yes	●	○	○	●	■	□	■	■	□
		Yes	No	Yes	●	○	○	○	■	□	■	■	■

○: When REC INHIBIT lamp is ON
□: Can be selected

●: When REC INHIBIT lamp is OFF
■: Cannot be selected

*1: Valid only when cassette is in "down" position.

Connector Signals

Main connectors

Connector	Connector No.
YC IN	VJS2579
YC OUT	VJS2579
AUDIO IN	VJS1920
AUDIO OUT	VJS1894
REMOTE 2	VJS1887
ENCODER REMOTE	VJS1888

YC Input/Output connector

Pin No.	Connector Signal
1	Y GND
2	C GND
3	Y signal input/output
4	C signal input/output

AUDIO Input/Output connector (XLR–3P)

Pin No.	Connector Signal
1	GND
2	HOT
3	COLD

REMOTE 2 connector (9P)

Pin No.	Connector Signal
1	GND
2	RECEIVE A
3	TRANSMIT B
4	TRANSMIT COMMON
5	SPARE
6	RECEIVE COMMON
7	RECEIVE B
8	TRANSMIT A
9	GND

TRANSMIT and RECEIVE pins are reversed when controlled from another VTR.

ENCODER REMOTE CONNECTOR (15P)

Pin No.	Connector Signal
1	——
2	BLACK LEVEL
3	CHROMA LEVEL
4	GND
5	+12 V
6	SYSTEM H ø
7	SYS. SC COARSE (2)
8	−12 V
9	CHROMA PHASE
10	VIDEO LEVEL
11	RET GND
12	——
13	——
14	SYS. SC FINE
15	SYS. SC COARSE (1)

Connector Signals (cont.)

Optional REMOTE 1 connector (50P) AU-MK25

Pin No.	Connector Signal	Pin No.	Connector Signal
1	REC COMMAND	26	+12 V
2	PLAY COMMAND	27	REC STATUS
3	FF COMMAND	28	PLAY STATUS
4	REW COMMAND	29	FF STATUS
5	STOP COMMAND	30	REW STATUS
6	PAUSE COMMAND	31	STOP STATUS
7	CUT IN COMMNAND	32	PAUSE STATUS
8	CUT OUT COMMAND	33	CUT IN STATUS
9	AUDIO CH1 COMMAND	34	SERVO LOCK STATUS
10	AUDIO CH2 COMMAND	35	AUDIO CH1 STATUS
11	VIDEO COMMNAD	36	AUDIO CH2 STATUS
12	TIME CODE DUB COMMAND	37	VIDEO STATUS
13	SHTL COMMAND	38	TIME CODE DUB STATUS
14	JOG COMMAND	39	SHTL STATUS
15	PREROLL COMMAND	40	JOG STATUS
16	EDIT COMMAND	41	READY ON/OFF STATUS
17	SEARCH 0	42	REMOTE
18	SEARCH 1	43	FWD
19	SEARCH 2	44	CTL SIGNAL
20	READY ON/OFF COMMAND	45	CTL GND
21	——	46	CAPSTAN OVERRIDE
22	FWD/REV COMMAND	47	GND
23	EJECT COMMAND	48	JOG CONTROL SIGNAL
24	UNTHREAD STATUS	49	JOG CONTROL GND
25	LOCAL ENABLE COMMAND	50	GND

Fig. 1

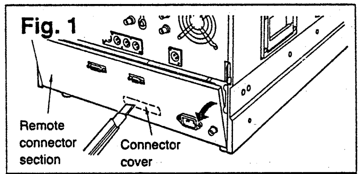

Fig. 2

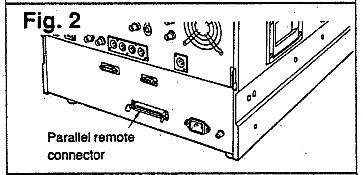

Fig. 3

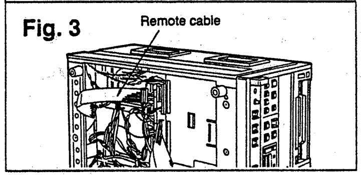

Attaching the REMOTE 1 connector

1. Detach the remote connector section and remove the connector cover. (See Fig. 1.)
2. Attach the optional AU-MK25 REMOTE 1 connector. (See Fig. 2)
3. Use the accessory remote cable to connect the REMOTE 1 connector as shown in the figure. (See Fig. 3)
4. Attach the remote connector section.

CAUTION: TO REDUCE THE RISK OF FIRE OR SHOCK HAZARD, REFER MOUNTING OF THE OPTIONAL CONNECTOR TO AUTHORIZED SERVICE PERSONNEL.

Error Messages

AU-65 only

Display	Description	VTR operation
SERVO NOT LOCKED	Flashes during the PLAY, REC PLAY or EDIT PLAY mode when the servo system has been disengaged for 3 or more seconds.	Continues operation
LOW-RF	Flashes when a dropout has been detected for 2 or more seconds while the PLAY lamp is ON and the tape is traveling at 1× speed.	Continues operation
DRUM MOTOR	Alarm sounds and message flashes when drum lock status continues for 5 or more seconds.	Stops
REEL MOTOR	Alarm sounds and message flashes when, in capstan mode, take-up reel does not rotate while the tape is advanced by about 10 cm.	Stops
FRONT LOAD MOTOR	VTR mode is transferred to eject if cassette does not assume "down" position even when 5 seconds have elapsed after cassette was inserted.	Ejects cassette
	Alarm sounds and message flashes when cassette does not assume "up" position when VTR is transferred to eject mode and 5 seconds have elapsed after cassette was inserted.	Stops
LOADING MOTOR	VTR mode is transferred to unloading when loading operation is not completed within 10 seconds.	Unloads tape
	Alarm sounds and message flashes when unloading operation is not completed within 10 seconds.	Stops
PHOTO TRANSISTOR	Alarm sounds and message flashes when sensor LED has failed.	Stops
DEW	Alarm sounds and message flashes when condensation has formed.	* Ejects tape
TAPE SLACK	Alarm sounds and message flashes when tape is slack.	Stops
REEL DRIVE ERROR	Alarm sounds and message flashes when actual tape advance direction differs from system control command by 5 or more seconds.	Stops
DC OO V TROUBLE	Alarm sounds and message flashes when there is something wrong with the power supply or related parts.	Stops
FAN STOP	Alarm sounds and message flashes when fan inside power supply box stops operating.	Continues operation
FG TROUBLE	Alarm sounds and message flashes when there is something wrong with reel travel during high-speed search.	Stops
NEGATIVE	Flashes when front panel DIP SW2-2 is ON if IN point is equal to or greater than OUT point during edit point entry.	——

[*] When condensation has formed, the drum continues to rotate so that the condensation will dry out. Once it has been removed, the AUTO OFF lamp and error display go off, and the VTR can be used again.

AU-63/62 only

Contact your authorized dealer if any of the error messages listed below should appear on the display.

Display	Description	VTR operation
E-00	Display flashes during playback when servo disturbances continue for 3 or more seconds.	Operation continues.
E-01	Display flashes when dropouts have been detected for more than 2 sec. during 1× tape speed while PLAY lamp is lighted.	Operation continues.
E-10	Alarm sounds and display flashes when drum lock continues for 5 or more sec.	Operation stops.
E-11	Alarm sounds and display flashes when take-up reel does not rotate while tape is fed for about 10 cm.	Operation stops.
E-14	Alarm sounds and display flashes when cassette is not lowered into position even when 5 seconds have elapsed after the cassette was inserted.	Tape is ejected.
	Alarm sounds and display flashes when cassette is not raised and ejected even when the eject mode is established and 5 seconds have elapsed.	Operation stops.
E-15	Alarm sounds and display flashes when loading is not completed within 10 sec.	Tape is ejected.
	Alarm sounds and display flashes when unloading is not completed within 10 sec.	Operation stops.
E-16	Alarm sounds and display flashes when sensor LED is disconnected.	Operation stops.
E-17	Alarm sounds and display flashes when condensation has formed.	(*)Tape is ejected.
E-18	Alarm sounds and display flashes when tape is slack.	Operation stops.
E-19	Alarm sounds and display flashes when the system control instruction and actual tape feed direction differ for more than 5 sec.	Operation stops.
E-1C E-21 ~ E-26	Alarm sounds and display flashes when a failure or malfunction arises in the power supply section.	Operation stops.
E-1F	Alarm sounds and display flashes when the fan inside the power supply box stops operating.	Operation continues.
E-20	Alarm sounds and display flashes when a failure or malfunction occurs to the reel transport during high-speed search.	Operation stops

When condensation has formed, the drum rotates in order to remove the condensation.
When the condensation is removed, the AUTO OFF lamp goes off, the error display is cleared, and the VTR can be operated again.

Head Cleaning

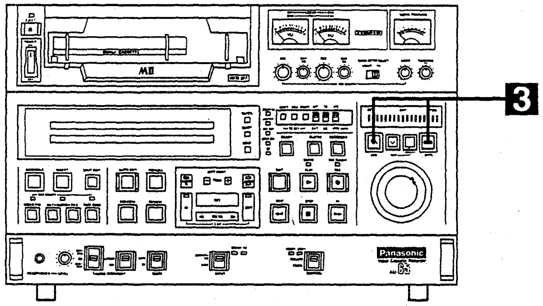

1 Set the VTR to the stop mode.

2 Remove the cassette tape.

3 Press the JOG and SHTL buttons together.

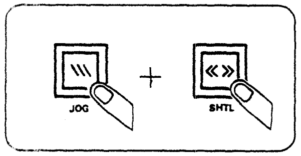

The loading post moves in order to facilitate head cleaning.

4 Proceed with head cleaning.

Handle the parts with the utmost care. For further details, contact your dealer.

5 Upon completion of the work, perform one of the following operations.

1) **Set the POWER switch to OFF and then back to ON.**
2) **Press the EJECT button.**
3) **Insert a cassette tape.**

6 This completes the head cleaning process.

Precaution for handling unit

Precaution for handling unit

- **Vibration**
  Avoid using the unit in a location which is susceptible to vibration.
- **Magnetism**
  Do not bring the unit near any source of magnetism or use it near any product which generates a strong magnetic field.
- **Temperature**
  Under no circumstances should be unit be used in extremely hot or cold location or where it will be exposed to direct sunlight since its performance may deteriorate as a result.
  Operating temperature: +5°C to+40°C/41°F to 104°F.
  (The blower area at the back with the ventilation holes should be never be blocked or covered since the blower functions to keep the temperature inside the unit from rising.)
- **Humidity**
  This unit dose not take kindly to humidity. Avoid using it or where it may be exposed to rain.
- **Re-location**
  - When moving the unit from place to place, eject the cassette tape first.
  - When disconnecting the power cord, be sure take hold of the power plug and unplug it from the power outlet.

Installation

Bear in mind the details below on the operating environment and installation space, and operational and servicing.
Use the unit on a flat and horizontal surface.

- In order to minimize trouble, do not place objects on top on the unit.
- If the unit is to be mounted on a stand, use a stand which is sturdy.
- Leave a clearance of at least 40 cm from a wall or other surface behind the unit so as to allow for ventilation and servicing.
- If the unit is to be used on a desk or other such surface, leave a clearance of at least 20 cm above the unit to as to allow for the servicing of the circuit boards. Such a clearance is not required for rack-mounting since the unit is pulled out for circuit board maintenance.

Maintenance

- Before proceeding with maintenance, set the power switch to the OFF position, and be sure to take hold of the power plug to disconnect it from the power outlet.
- Use a soft cloth to clean the cabinet. To remove stains or stubborn dirt, wipe the unit with a dry cloth.
- Never use paint thinners or benzine.

Storage

- Do not store the unit in an extremely hot or cold location.
- The unit should never be left outdoors.
- If the unit will not be used for a prolonged period of time, set its power switch to the OFF position, and be sure to take hold of the power plug and disconnect it from the power outlet. This will help prevent accidents.
- If a cassette tape is the unit, be sure to eject it.

Rack Mounting

Using the optional AU-M60 rack-mounting adaptors, the unit can be housed in a standard IEC 48.2 cm rack. For the mounting rails, either the rails and bracket unit (part no. CC3001-99-0191) made by Chassis Trak or the rails (part no. C-2038-1215) and brackets (part no. BK-2308) made by Accuride are recommended. Consult with your dealer for further details.

1 Remove the 6 screws each at the left and right sides of the main unit.

2 Attach the inner members

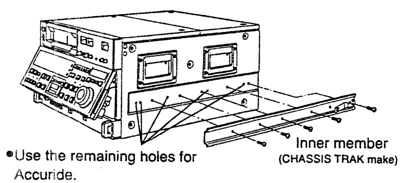

- Use the remaining holes for Accuride.

Attach the inner members of the slide rails using the screws which have just been removed.
There is a limit to the length of the screws used. If any of the mounting screws have been lost or misplaced, use screws (M4x10) with a length of not more than 10 mm.
Screw down the inner members in 4 or more places.

3 Remove the 4 rubber feet on the unit's bottom panel.

4 Attach the outer member brackets to the rack.

Check that the height at the left and right is the same.

5 Attach the optional AU-M60 rack-mounting adaptors.

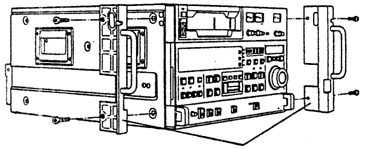

6 Check that the unit slides properly in and out.

Mount the unit in the rack, and check that it slides smoothly on the rails.

❶ LOCATION OF TEST POINTS & CONTROLS (B1, AU-F65)

P.C. Board Location

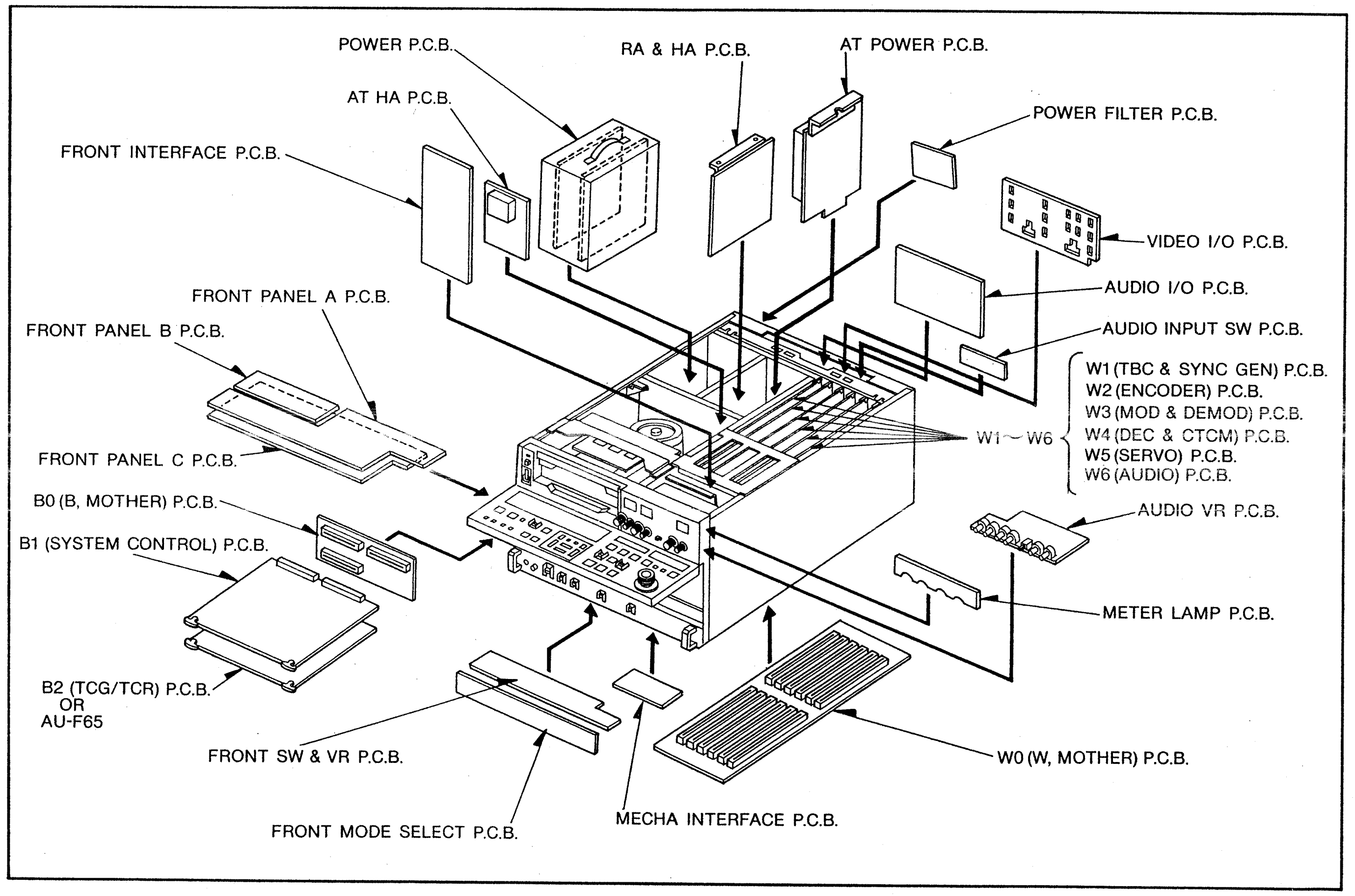
POWER P.C.B.
RA & HA P.C.B.
AT POWER P.C.B.
AT HA P.C.B.
POWER FILTER P.C.B.
FRONT INTERFACE P.C.B.
VIDEO I/O P.C.B.
AUDIO I/O P.C.B.
FRONT PANEL A P.C.B.
FRONT PANEL B P.C.B.
AUDIO INPUT SW P.C.B.
W1 (TBC & SYNC GEN) P.C.B.
W2 (ENCODER) P.C.B.
W3 (MOD & DEMOD) P.C.B.
W4 (DEC & CTCM) P.C.B.
W5 (SERVO) P.C.B.
W6 (AUDIO) P.C.B.
W1 ~ W6
FRONT PANEL C P.C.B.
B0 (B, MOTHER) P.C.B.
AUDIO VR P.C.B.
B1 (SYSTEM CONTROL) P.C.B.
METER LAMP P.C.B.
B2 (TCG/TCR) P.C.B.
OR
AU-F65
FRONT SW & VR P.C.B.
W0 (W, MOTHER) P.C.B.
MECHA INTERFACE P.C.B.
FRONT MODE SELECT P.C.B.

B1 SYSTEM CONTROL P.C.BOARD

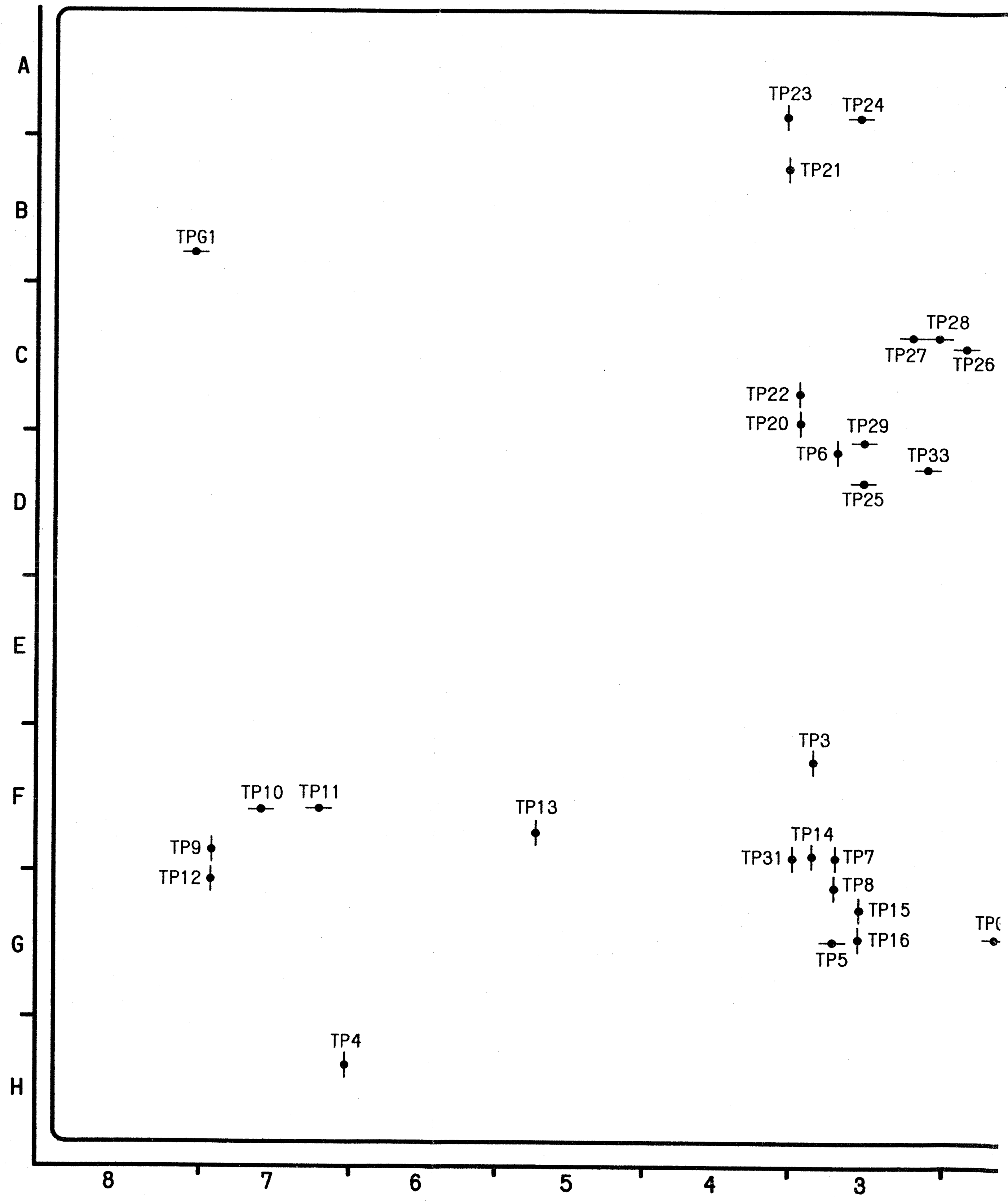
A
B
C
D
E
F
G
H
TP23
TP24
TP21
TPG1
TP28
TP27
TP26
TP22
TP20
TP29
TP6
TP33
TP25
TP3
TP10
TP11
TP13
TP14
TP9
TP31
TP7
TP12
TP8
TP15
TP16
TP5
TP4
8
7
6
5
4
3

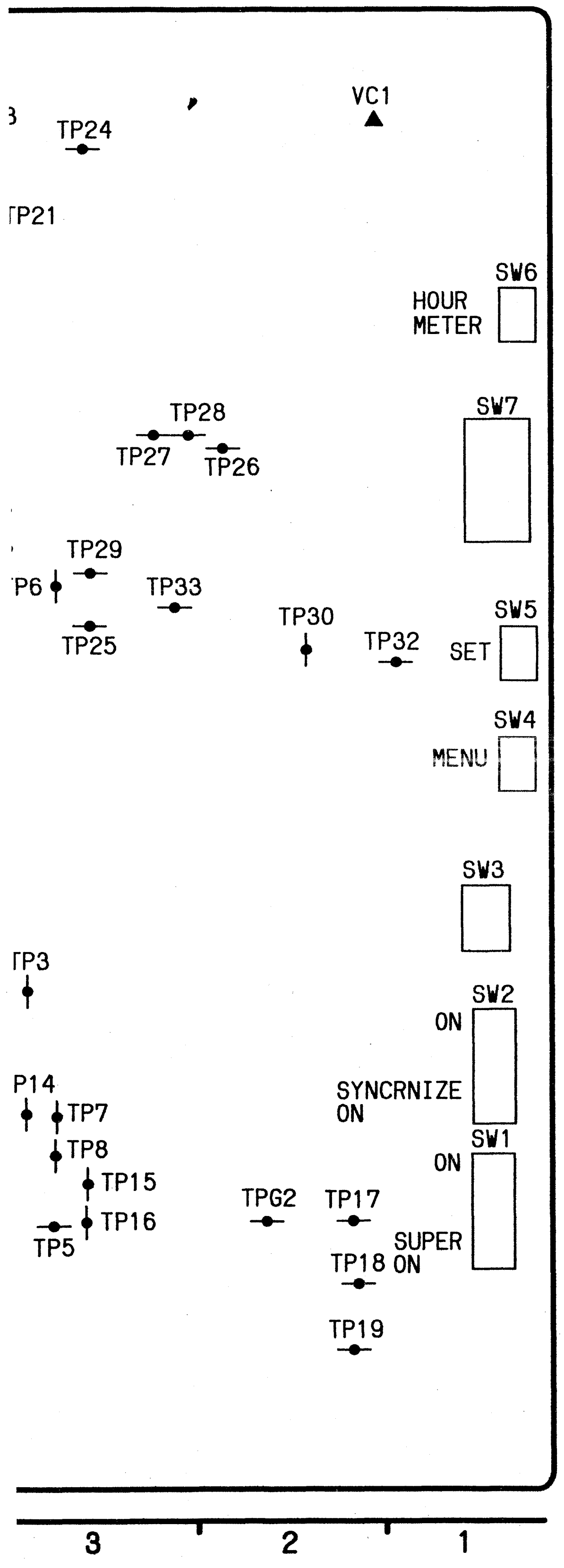
TP24
VC1
TP21
SW6
HOUR METER
SW7
TP28
TP27
TP26
TP29
P6
TP33
TP25
TP30
TP32
SW5
SET
SW4
MENU
SW3
TP3
SW2
ON
SYNCRNIZE ON
P14
TP7
TP8
SW1
ON
TP15
TPG2
TP17
SUPER ON
TP16
TP5
TP18
TP19
3
2
1

B1 SYSTEM CONTROL	
Adjustment	
VC1	A-2
Test Point	
TP3	F-3
TP4	H-7
TP5	G-3
TP6	D-3
TP7	F-3
TP8	G-3
TP9	F-7
TP10	F-7
TP11	F-7
TP12	G-7
TP13	F-5
TP14	F-3
TP15	G-3
TP16	G-3
TP17	G-2
TP18	G-2
TP19	H-2
TP20	C-4
TP21	B-4
TP22	C-4
TP23	A-4
TP24	A-3
TP25	D-3
TP27	C-3
TP28	C-3
TP29	D-3
TP30	D-2
TP31	F-4
TP32	D-1
TP33	D-3
TPG1	B-8
TPG2	G-2
Switch	
SW1	G-1
SW2	F-1
SW3	E-1
SW4	D-1
SW5	D-1
SW6	B-1
SW7	C-1

ADDRESS INFORMATION

AU-F65 (OPTION)

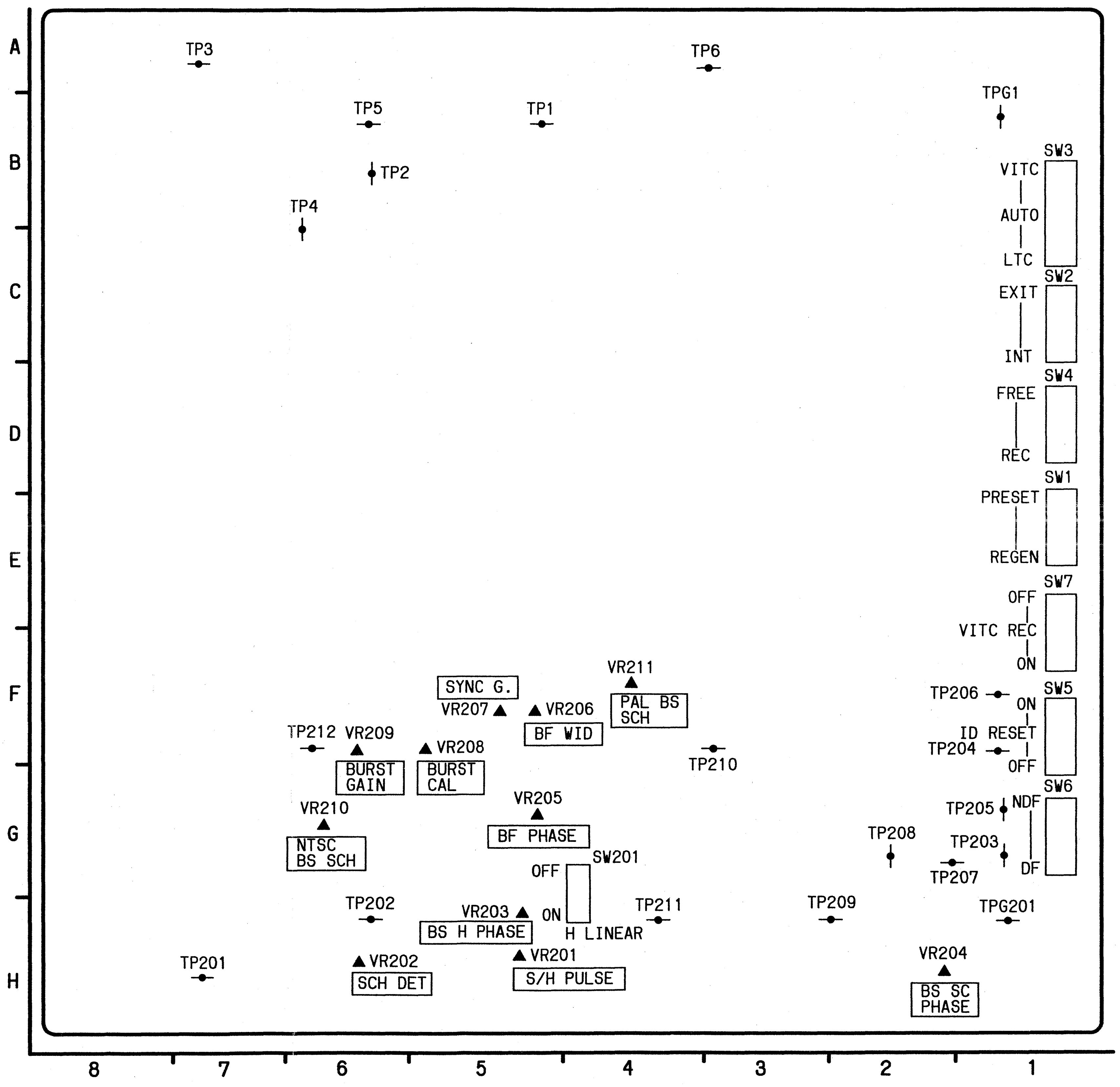
A
B
C
D
E
F
G
H
TP3
TP6
TPG1
TP5
TP1
TP2
TP4
SW3
VITC
AUTO
LTC
SW2
EXIT
INT
SW4
FREE
REC
SW1
PRESET
REGEN
SW7
OFF
VITC REC
ON
VR211
SYNC G.
PAL BS SCH
VR207
VR206
BF WID
TP206
SW5
ON
TP212
VR209
VR208
ID RESET
TP204
OFF
BURST GAIN
BURST CAL
TP210
VR205
SW6
VR210
TP205
NDF
NTSC BS SCH
BF PHASE
TP208
TP203
SW201
OFF
TP207
DF
TP202
VR203
ON
TP211
TP209
TPG201
BS H PHASE
H LINEAR
VR201
VR204
TP201
VR202
SCH DET
S/H PULSE
BS SC PHASE
8
7
6
5
4
3
2
1

B2 TCG/TCR	
Adjustment	
VR201	H-5
VR202	H-6
VR203	H-5
VR204	H-2
VR205	G-5
VR206	F-5
VR207	F-5
VR208	F-5
VR209	F-5
VR210	G-6
VR211	F-4
Test Point	
TP1	B-5
TP2	B-6
TP3	A-7
TP4	B-6
TP5	B-6
TP6	A-4
TP201	H-2
TP202	H-1
TP203	G-1
TP204	F-1
TP205	G-1
TP206	F-1
TP207	G-1
TP208	G-2
TP209	H-3
TP210	F-4
TP211	H-4
TPG1	B-1
TPG201	H-1
Switch	
SW1	E-1
SW2	C-1
SW3	B-1
SW4	E-1
SW5	F-1
SW6	G-1
SW7	E-1

ADDRESS INFORMATION

❷ LOCATION OF TEST POINTS & CONTROLS (W1, W2)

P.C. Board Location

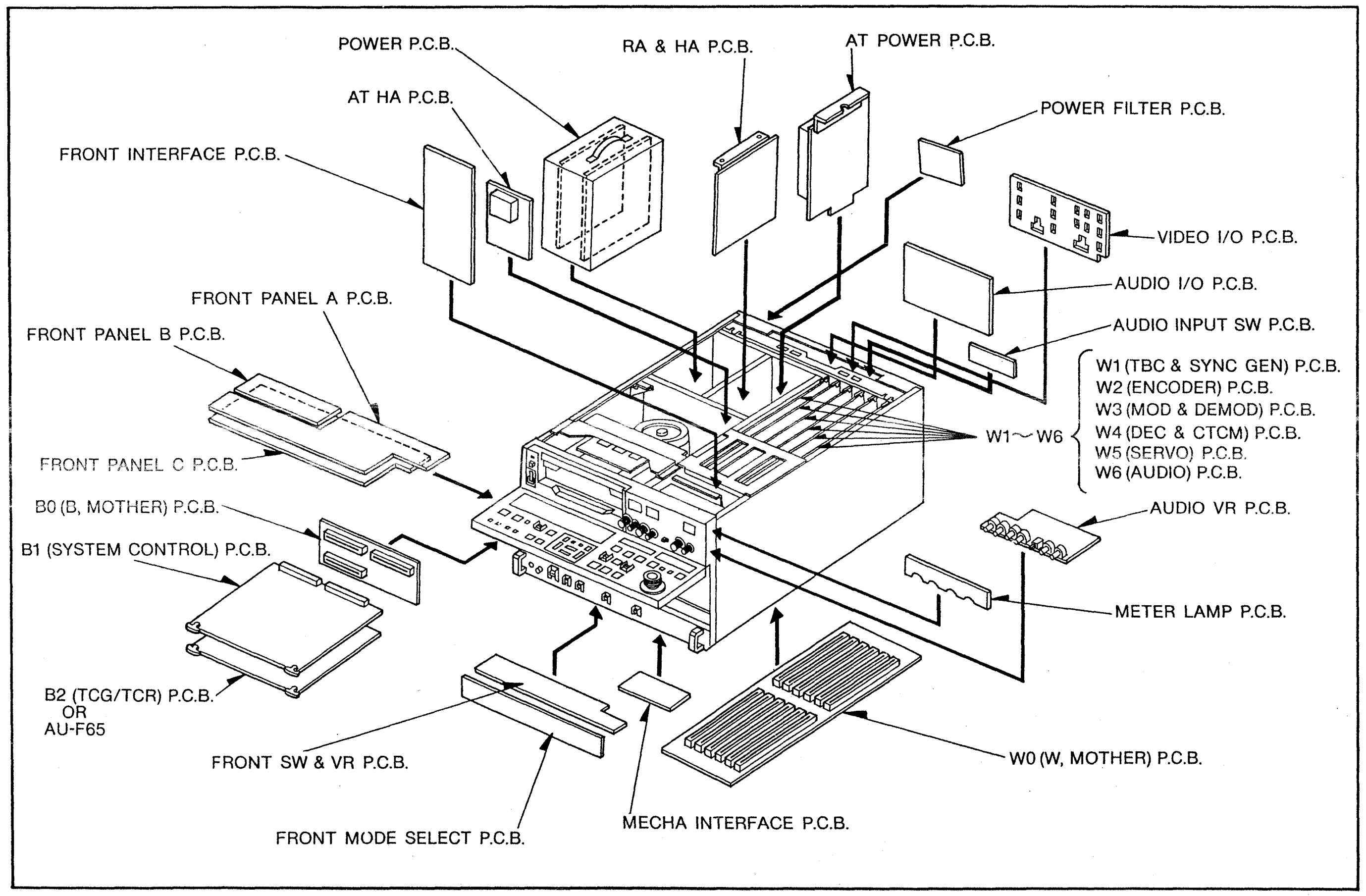
POWER P.C.B.
RA & HA P.C.B.
AT POWER P.C.B.
AT HA P.C.B.
POWER FILTER P.C.B.
FRONT INTERFACE P.C.B.
VIDEO I/O P.C.B.
AUDIO I/O P.C.B.
FRONT PANEL A P.C.B.
FRONT PANEL B P.C.B.
AUDIO INPUT SW P.C.B.
W1 (TBC & SYNC GEN) P.C.B.
W2 (ENCODER) P.C.B.
W3 (MOD & DEMOD) P.C.B.
W1～W6
W4 (DEC & CTCM) P.C.B.
W5 (SERVO) P.C.B.
W6 (AUDIO) P.C.B.
FRONT PANEL C P.C.B.
B0 (B, MOTHER) P.C.B.
AUDIO VR P.C.B.
B1 (SYSTEM CONTROL) P.C.B.
METER LAMP P.C.B.
B2 (TCG/TCR) P.C.B.
OR
AU-F65
FRONT SW & VR P.C.B.
W0 (W, MOTHER) P.C.B.
FRONT MODE SELECT P.C.B.
MECHA INTERFACE P.C.B.

W1 TBC & SYNC GEN. P.C.BOARD

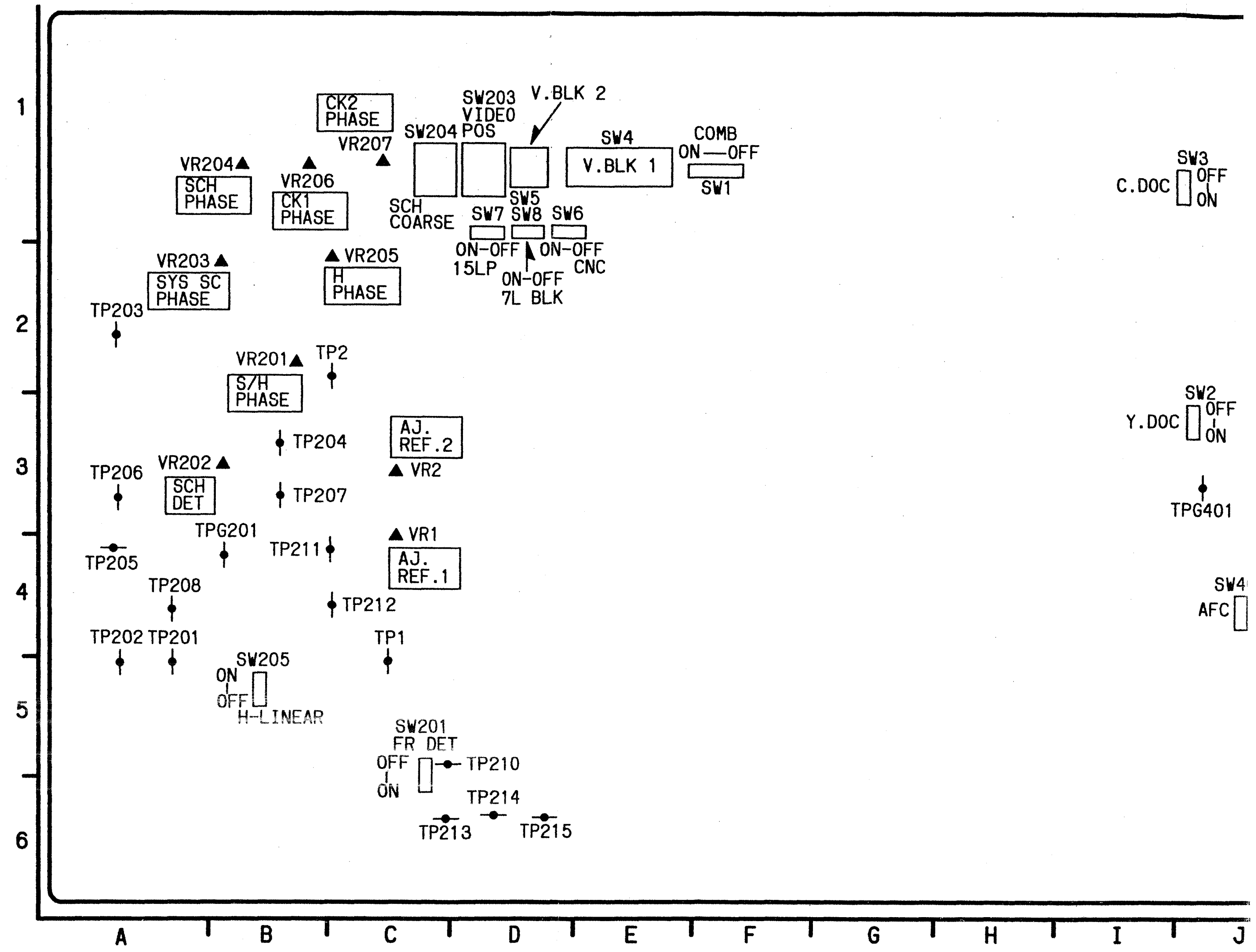
1
2
3
4
5
6
CK2 PHASE
VR207
SW203 VIDEO POS
V.BLK 2
SW204
SW4
V.BLK 1
COMB
ON—OFF
SW1
SW3
C.DOC
OFF
ON
VR204▲
SCH PHASE
▲
VR206
CK1 PHASE
SCH COARSE
SW5
SW7
SW8
SW6
ON-OFF
15LP
ON-OFF
7L BLK
ON-OFF
CNC
VR203▲
SYS SC PHASE
▲VR205
H PHASE
TP203
VR201▲
S/H PHASE
TP2
SW2
Y.DOC
OFF
ON
TP204
AJ. REF.2
▲VR2
TP206
VR202▲
SCH DET
TP207
TPG401
TPG201
▲VR1
TP205
TP211
AJ. REF.1
TP208
TP212
SW4
AFC
TP202
TP201
TP1
SW205
ON
OFF
H-LINEAR
SW201
FR DET
OFF
ON
TP210
TP214
TP213
TP215
A
B
C
D
E
F
G
H
I
J

W1 TBC & SYNC GEN.					
Adjustment		TP201	A-4	TP426	L-4
VR1	C-4	TP202	A-4	TPG201	B-4
VR2	C-3	TP203	A-2	TPG401	J-3
VR7	C-1	TP204	B-3	TPG402	M-4
VR201	B-2	TP205	A-4	**Switch**	
VR202	B-3	TP206	A-3		
VR203	B-2	TP207	B-3	SW1	F-1
VR204	B-1	TP208	A-4	SW4	E-1
VR205	B-2	TP210	C-5	SW5	D-1
VR206	B-1	TP211	C-4	SW6	D-1
VR401	J-5	TP212	C-4	SW7	D-1
VR402	L-2	TP213	C-6	SW8	D-1
VR403	M-5	TP214	D-6	SW203	D-1
VR405	L-1	TP215	D-6	SW204	C-1
VR406	L-1	TP412	M-5		
VR408	M-4	TP413	L-6		
VR409	L-2	TP416	L-6		
		TP417	M-5		
Test Point		TP422	J-4		
		TP423	K-4		
TP1	C-4	TP424	M-3		
TP2	B-2	TP425	M-4		

ADDRESS INFORMATION

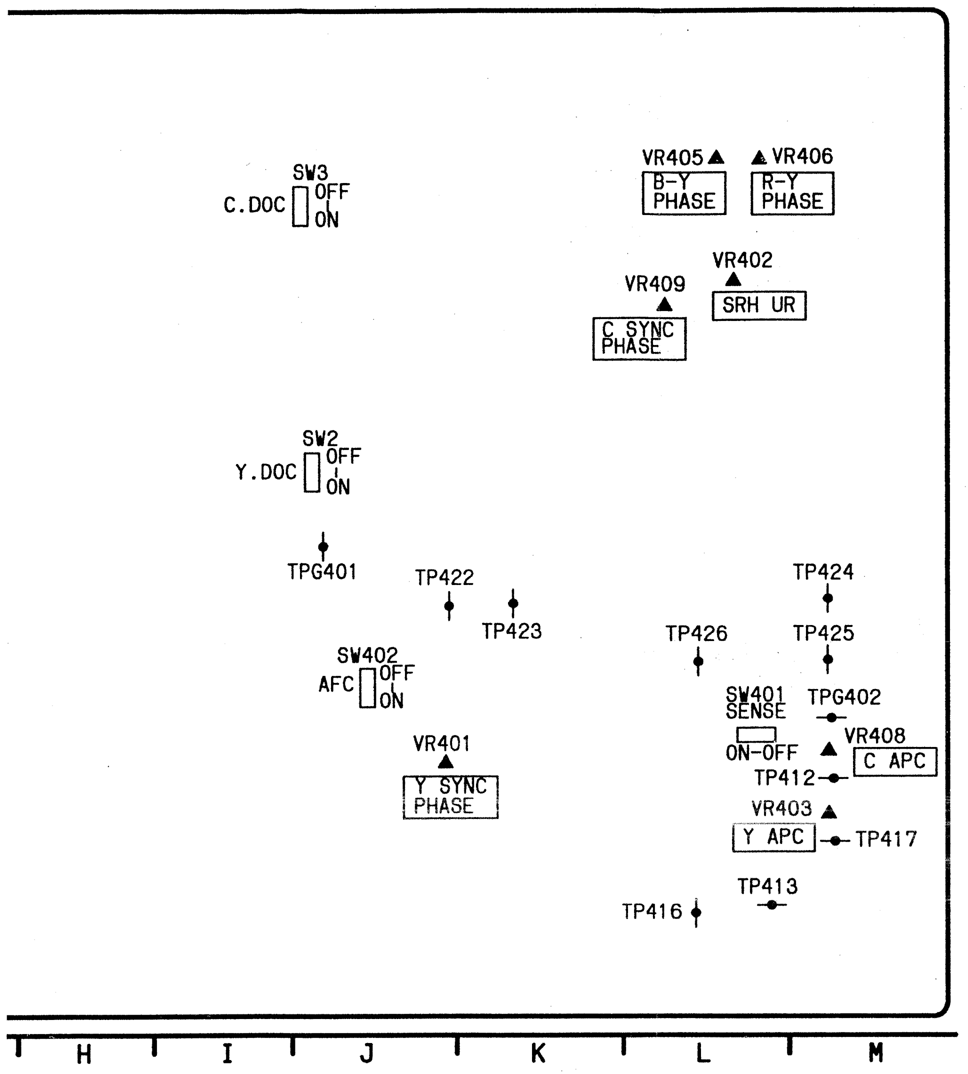
SW3
C.DOC
OFF
ON
VR405
VR406
B-Y PHASE
R-Y PHASE
VR402
VR409
SRH UR
C SYNC PHASE
SW2
Y.DOC
OFF
ON
TPG401
TP422
TP423
TP424
TP426
TP425
SW402
AFC
OFF
ON
SW401 SENSE
ON-OFF
TPG402
VR408
C APC
VR401
Y SYNC PHASE
TP412
VR403
Y APC
TP417
TP413
TP416
H
I
J
K
L
M

W2 ENCODER P.C.BOARD

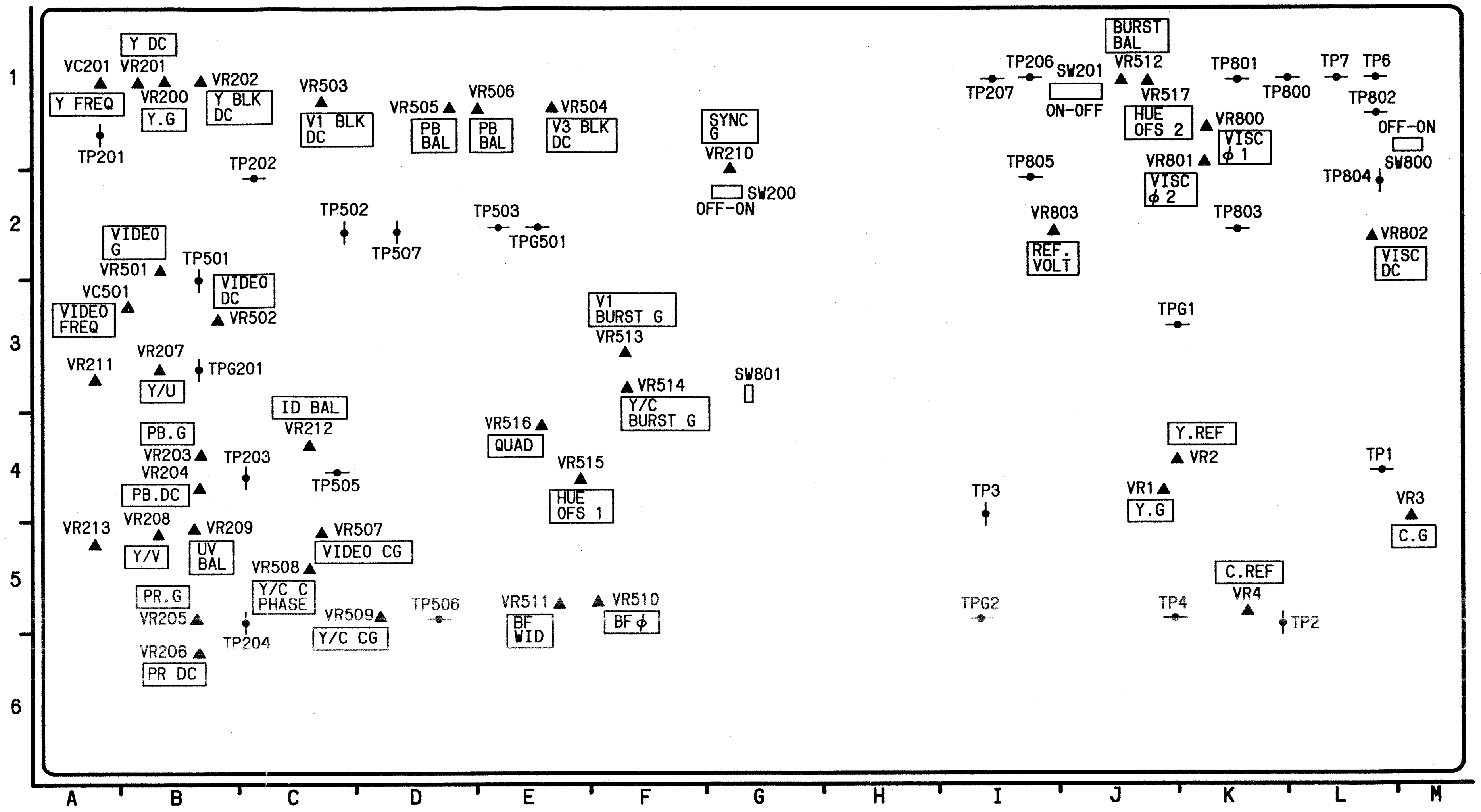
1
2
3
4
5
6
Y DC
VC201
VR201
VR200
VR202
Y FREQ
Y.G
Y BLK DC
TP201
TP202
VR503
V1 BLK DC
VR505
PB BAL
VR506
PB BAL
VR504
V3 BLK DC
SYNC G
VR210
SW200
OFF-ON
TP502
TP507
TP503
TPG501
VIDEO G
VR501
TP501
VIDEO DC
VC501
VIDEO FREQ
VR502
VR211
VR207
Y/U
TPG201
ID BAL
VR212
PB.G
VR203
VR204
TP203
PB.DC
TP505
VR213
VR208
Y/V
VR209
UV BAL
VR507
VIDEO CG
VR508
PR.G
VR205
Y/C C PHASE
VR509
Y/C CG
TP204
VR206
PR DC
TP506
V1 BURST G
VR513
VR514
Y/C BURST G
SW801
VR516
QUAD
VR515
HUE OFS 1
VR511
BF WID
VR510
BF ϕ
TP206
TP207
SW201
ON-OFF
BURST BAL
VR512
VR517
HUE OFS 2
VR800
VISC ϕ 1
VR801
VISC ϕ 2
TP801
TP800
TP7
TP6
TP802
OFF-ON
SW800
TP804
TP805
VR803
REF. VOLT
TP803
VR802
VISC DC
TPG1
Y.REF
VR2
VR1
Y.G
TP3
TP1
VR3
C.G
C.REF
VR4
TP4
TP2
TPG2
A
B
C
D
E
F
G
H
I
J
K
L
M

P426	L-4
PG201	B-4
PG401	J-3
PG402	M-4
tch	
W1	F-1
W4	E-1
W5	D-1
W6	D-1
W7	D-1
W8	D-1
W203	D-1
W204	C-1

W2 ENCODER							
Adjustment		VR213	A-5	VR802	L-2	TP506	D-5
VC201	A-1	VR501	B-2	VR803	I-2	TP507	D-2
VC501	B-3	VR502	B-3			TP800	K-1
VR1	J-4	VR503	C-1	**Test Point**		TP801	K-1
VR2	J-4	VR504	E-1	TP1	L-4	TP802	L-1
VR3	M-5	VR505	D-1	TP2	K-5	TP803	K-2
VR4	K-5	VR506	D-1	TP3	I-4	TP804	L-2
VR200	B-1	VR507	C-5	TP4	J-4	TP805	I-2
VR201	B-1	VR508	C-5	TP6	L-1	TPG1	J-3
VR202	B-1	VR509	D-5	TP7	L-1	TPG2	I-5
VR203	B-4	VR510	F-5	TP201	A-1	TPG201	B-3
VR204	B-4	VR511	E-5	TP202	C-2	TPG501	E-2
VR205	B-5	VR512	J-1	TP203	C-4	**Switch**	
VR206	B-6	VR513	F-3	TP204	C-5	SW200	G-2
VR207	B-3	VR514	F-3	TP206	I-1	SW201	J-1
VR208	B-5	VR515	E-4	TP207	I-1	SW801	G-3
VR209	B-5	VR516	E-4	TP501	B-2	SW802	L-2
VR210	G-2	VR517	J-1	TP502	C-2		
VR211	A-3	VR800	K-1	TP503	E-2		
VR212	C-4	VR801	K-1	TP505	C-4		

ADDRESS INFORMATION

❸ LOCATION OF TEST POINTS & CONTROLS (W3, W4)

P.C. Board Location

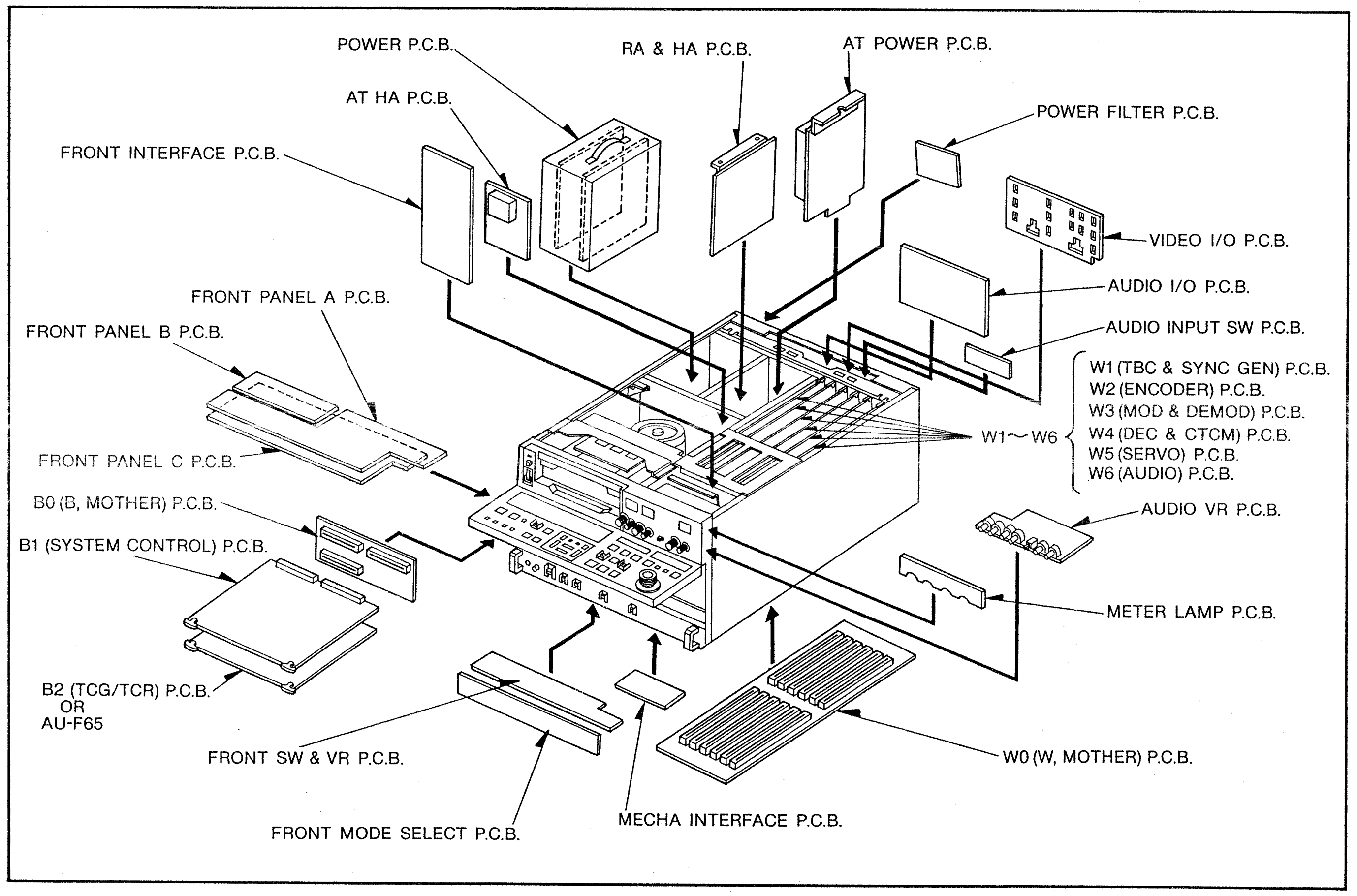
POWER P.C.B.
RA & HA P.C.B.
AT POWER P.C.B.
AT HA P.C.B.
POWER FILTER P.C.B.
FRONT INTERFACE P.C.B.
VIDEO I/O P.C.B.
AUDIO I/O P.C.B.
FRONT PANEL A P.C.B.
FRONT PANEL B P.C.B.
AUDIO INPUT SW P.C.B.
W1 (TBC & SYNC GEN) P.C.B.
W2 (ENCODER) P.C.B.
W3 (MOD & DEMOD) P.C.B.
W1～W6
W4 (DEC & CTCM) P.C.B.
W5 (SERVO) P.C.B.
W6 (AUDIO) P.C.B.
FRONT PANEL C P.C.B.
B0 (B, MOTHER) P.C.B.
AUDIO VR P.C.B.
B1 (SYSTEM CONTROL) P.C.B.
METER LAMP P.C.B.
B2 (TCG/TCR) P.C.B.
OR
AU-F65
FRONT SW & VR P.C.B.
W0 (W, MOTHER) P.C.B.
FRONT MODE SELECT P.C.B.
MECHA INTERFACE P.C.B.

W3 MOD & DEMOD P.C.BOARD

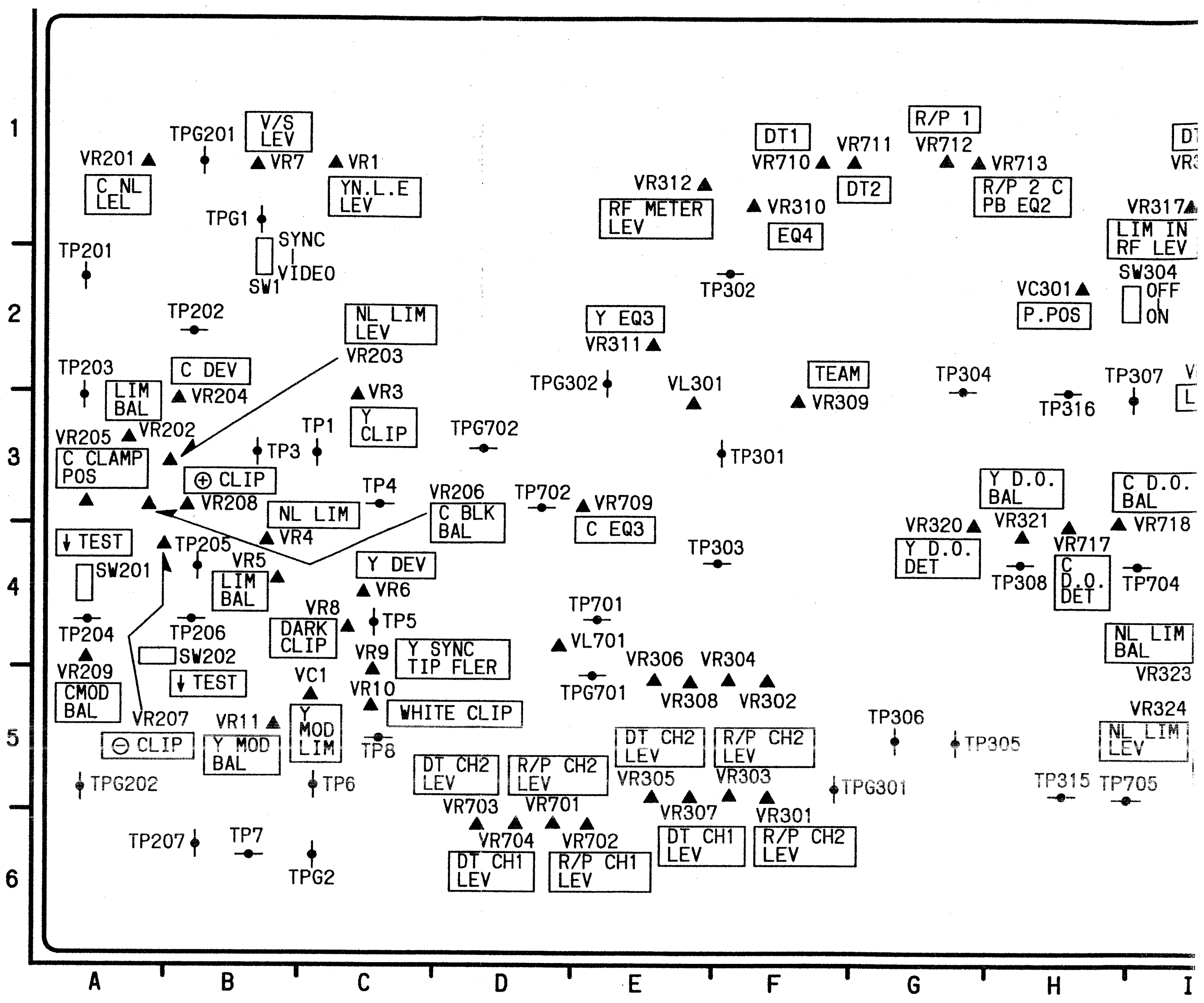
1
2
3
4
5
6
A
B
C
D
E
F
G
H
I
TPG201
V/S LEV
VR201
VR7
VR1
C NL LEL
YN.L.E LEV
TPG1
SYNC
VIDEO
SW1
TP201
TP202
NL LIM LEV
VR203
TP203
C DEV
LIM BAL
VR204
VR3
Y CLIP
VR205
VR202
TP1
TP3
C CLAMP POS
⊕ CLIP
VR208
TP4
NL LIM
VR4
VR206
C BLK BAL
TP702
VR709
C EQ3
TEST
TP205
VR5
SW201
LIM BAL
Y DEV
VR6
VR8
TP204
TP206
DARK CLIP
TP5
VR209
SW202
TEST
VR9
Y SYNC TIP FLER
CMOD BAL
VC1
VR10
WHITE CLIP
VR207
VR11
Y MOD LIM
⊖ CLIP
Y MOD BAL
TP8
TPG202
TP6
TP207
TP7
TPG2
VR312
RF METER LEV
VR310
EQ4
DT1
VR710
VR711
DT2
R/P 1
VR712
VR713
R/P 2 C PB EQ2
TP302
Y EQ3
VR311
TPG302
VL301
TEAM
VR309
TP304
TPG702
TP301
TP303
TP701
VL701
VR306
VR304
TPG701
VR308
VR302
DT CH2 LEV
R/P CH2 LEV
VR305
VR303
DT CH2 LEV
R/P CH2 LEV
VR703
VR701
VR307
VR301
VR704
VR702
DT CH1 LEV
R/P CH2 LEV
DT CH1 LEV
R/P CH1 LEV
TP306
TP305
TPG301
TP315
TP705
TP307
TP316
Y D.O. BAL
C D.O. BAL
VR320
VR321
VR718
VR717
Y D.O. DET
TP308
C D.O. DET
TP704
NL LIM BAL
VR323
VR324
NL LIM LEV
VC301
P.POS
SW304
OFF
ON
LIM IN RF LEV
VR317

W3 MODULATOR & DEMODULATOR							
Adjustment		VR301	F-5	VR331	M-3	TP6	C-5
VC1	C-5	VR302	F-5	VR701	D-6	TP7	B-6
VC301	H-2	VR303	F-5	VR702	E-6	TP8	C-5
VL301	E-3	VR304	F-5	VR703	D-6	TP201	A-2
VL302	J-4	VR305	E-5	VR704	D-6	TP202	B-2
VL303	L-3	VR306	E-5	VR709	E-3	TP203	A-3
VL701	D-4	VR307	E-5	VR710	F-1	TP204	A-4
VL702	J-2	VR308	E-5	VR711	F-1	TP205	B-4
VR1	C-1	VR309	F-3	VR712	G-1	TP206	B-4
VR3	C-3	VR310	F-1	VR713	G-1	TP207	B-6
VR4	B-4	VR311	E-2	VR714	J-2	TP303	E-4
VR5	B-4	VR312	E-1	VR715	L-2	TP304	G-3
VR6	C-4	VR313	I-1	VR716	K-3	TP305	G-5
VR7	B-1	VR314	J-1	VR717	H-4	TP306	G-5
VR8	C-4	VR315	J-1	VR718	H-3	TP307	H-3
VR9	C-5	VR316	J-1	VR719	K-4	TP308	H-4
VR10	C-5	VR317	I-1	VR720	K-6	TP309	J-5
VR11	B-5	VR318	I-2	VR721	K-5	TP310	J-5
VR201	A-1	VR319	J-2	VR722	K-5	TP311	J-5
VR202	A-3	VR320	G-4	VR723	L-5	TP312	L-3
VR203	A-3	VR321	H-4	VR724	J-1	TP313	L-3
VR204	B-3	VR322	I-4	VR725	M-4	TP315	H-5
VR205	A-3	VR323	I-5	VR726	M-5	TP316	H-3
VR206	A-3	VR324	I-5	**Test Point**		TP317	L-2
VR207	A-4	VR325	I-5			TP701	E-4
VR208	B-3	VR326	L-3	TP1	C-3	TP702	D-3
VR209	A-4	VR327	K-1	TP3	B-3	TP703	K-1
VR300	L-1	VR328	M-2	TP4	C-3	TP703	L-5
		VR329	L-1	TP5	C-4	TP704	I-4

ADDRESS INFORMATION

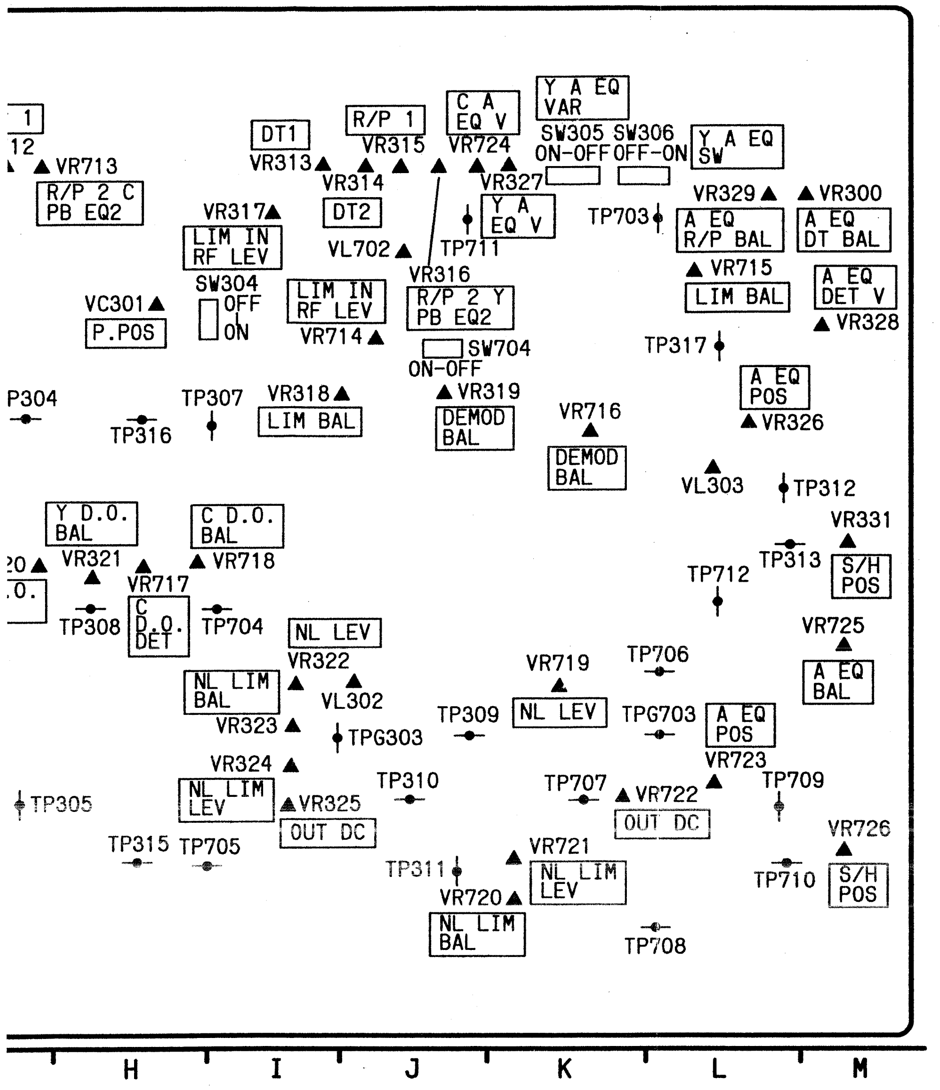
VR713
R/P 2 C PB EQ2
DT1
VR313
R/P 1
VR315
C A EQ V
VR724
Y A EQ VAR
SW305 ON-OFF
SW306 OFF-ON
Y A EQ SW
VR314
DT2
VR327
Y A EQ V
TP703
VR329
VR300
A EQ R/P BAL
A EQ DT BAL
VR317
LIM IN RF LEV
VL702
TP711
VR316
VR715
A EQ DET V
SW304 OFF ON
LIM IN RF LEV
R/P 2 Y PB EQ2
LIM BAL
VR328
VC301
P.POS
VR714
SW704 ON-OFF
TP317
A EQ POS
P304
TP307
VR318
VR319
VR716
VR326
TP316
LIM BAL
DEMOD BAL
DEMOD BAL
VL303
TP312
Y D.O. BAL
C D.O. BAL
VR331
VR321
VR718
TP313
S/H POS
VR717
TP712
TP308
C D.O. DET
TP704
NL LEV
VR725
VR322
VR719
TP706
A EQ BAL
NL LIM BAL
VL302
NL LEV
TPG703
A EQ POS
VR323
TPG303
TP309
VR723
VR324
TP310
TP707
VR722
TP709
TP305
NL LIM LEV
VR325
OUT DC
OUT DC
VR726
TP315
TP705
VR721
TP311
NL LIM LEV
TP710
S/H POS
VR720
NL LIM BAL
TP708
H
I
J
K
L
M

LATOR				
	TP6	C-5	TP705	H-5
	TP7	B-6	TP706	L-4
	TP8	C-5	TP707	K-5
	TP201	A-2	TP709	L-5
	TP202	B-2	TP711	J-1
	TP203	A-3	TP712	L-4
	TP204	A-4	TPG1	B-1
	TP205	B-4	TPG2	C-6
	TP206	B-4	TPG201	B-1
	TP207	B-6	TPG202	A-5
	TP303	E-4	TPG301	F-5
	TP304	G-3	TPG302	E-2
	TP305	G-5	TPG303	I-5
	TP306	G-5	TPG701	E-5
	TP307	H-3	TPG702	D-3
	TP308	H-4	**Switch**	
	TP309	J-5	SW1	B-2
	TP310	J-5	SW201	A-4
	TP311	J-5	SW202	A-4
	TP312	L-3	SW304	H-2
	TP313	L-3	SW305	K-1
	TP315	H-5	SW306	K-1
	TP316	H-3		
	TP317	L-2		
	TP701	E-4		
	TP702	D-3		
	TP703	K-1		
	TP703	L-5		
	TP704	I-4		

W4 DECODER & CTCM P.C.BOARD

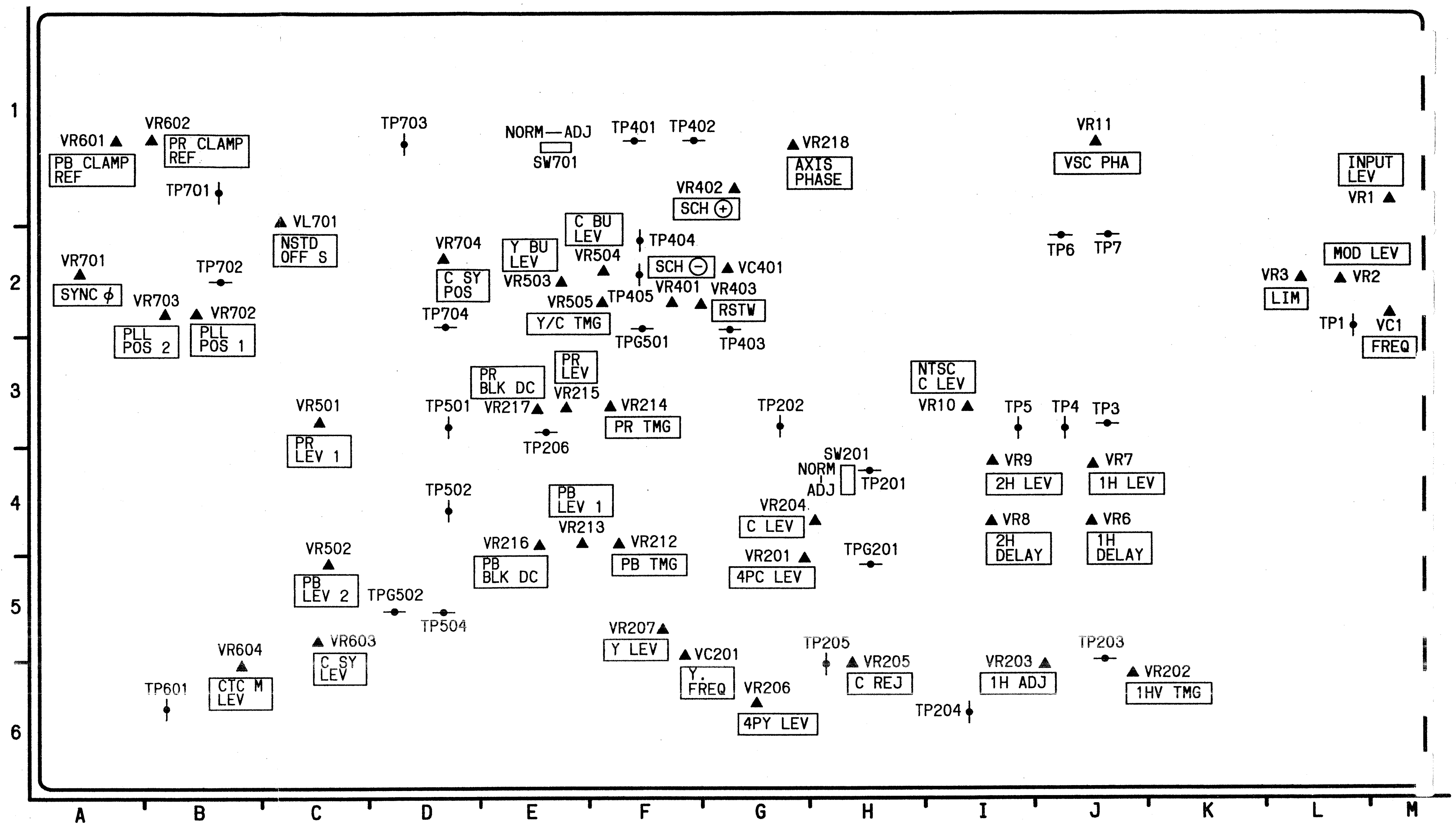
1
2
3
4
5
6
VR601
PB CLAMP REF
VR602
PR CLAMP REF
TP701
TP703
NORM—ADJ
SW701
TP401
TP402
VR218
AXIS PHASE
VR11
VSC PHA
INPUT LEV
VR1
VR402
SCH ⊕
VL701
NSTD OFF S
C BU LEV
TP404
TP6
TP7
MOD LEV
VR701
TP702
VR704
Y BU LEV
VR504
SCH ⊖
VC401
VR3
VR2
SYNC φ
VR703
VR702
C SY POS
VR503
VR401
VR403
LIM
PLL POS 2
PLL POS 1
TP704
VR505
TP405
RSTW
TP1
VC1
Y/C TMG
TPG501
TP403
FREQ
PR BLK DC
PR LEV
NTSC C LEV
VR501
TP501
VR217
VR215
VR214
TP202
VR10
TP5
TP4
TP3
PR TMG
PR LEV 1
TP206
SW201
VR9
VR7
NORM ADJ
TP201
2H LEV
1H LEV
TP502
PB LEV 1
VR204
VR8
VR6
C LEV
VR213
VR502
VR216
VR212
VR201
TPG201
2H DELAY
1H DELAY
PB BLK DC
PB TMG
4PC LEV
PB LEV 2
TPG502
TP504
VR207
TP205
TP203
VR603
Y LEV
VC201
VR205
VR203
VR202
VR604
C SY LEV
Y FREQ
VR206
C REJ
1H ADJ
1HV TMG
TP601
CTC M LEV
4PY LEV
TP204
A
B
C
D
E
F
G
H
I
J
K
L
M

W4 DECODER & CTCM							
Adjustment		VR206	G-6	VR702	B-2	TP404	F-2
VC1	M-2	VR207	F-5	VR703	B-2	TP405	F-2
VC201	F-5	VR213	E-4	VR704	D-2	TP501	D-3
VC401	G-2	VR215	E-3	**Test Point**		TP502	D-4
VL701	C-2	VR216	E-4	TP1	L-2	TP504	D-5
VR1	M-1	VR217	E-3	TP3	J-3	TP601	B-6
VR2	L-2	VR218	G-1	TP4	J-3	TP701	B-1
VR3	L-2	VR401	F-2	TP5	I-3	TP702	B-2
VR6	J-4	VR402	G-1	TP6	J-2	TP703	D-1
VR7	J-4	VR403	F-2	TP7	J-2	TP704	D-2
VR8	I-4	VR405	F-2	TP201	H-4	TPG201	H-5
VR9	I-4	VR501	C-3	TP202	G-3	TPG501	F-2
VR10	I-3	VR502	C-5	TP203	J-5	TPG502	D-5
VR11	J-1	VR503	E-2	TP204	I-6	**Switch**	
VR201	G-5	VR504	F-2	TP205	H-6	SW201	H-4
VR202	J-6	VR601	A-1	TP206	E-3	SW701	E-1
VR203	I-6	VR602	B-1	TP401	F-1		
VR204	G-4	VR603	C-5	TP402	F-1		
VR205	H-6	VR604	B-6	TP403	G-3		
		VR701	A-2				

ADDRESS INFORMATION

❹ LOCATION OF TEST POINTS & CONTROLS (W5, W6)

P.C. Board Location

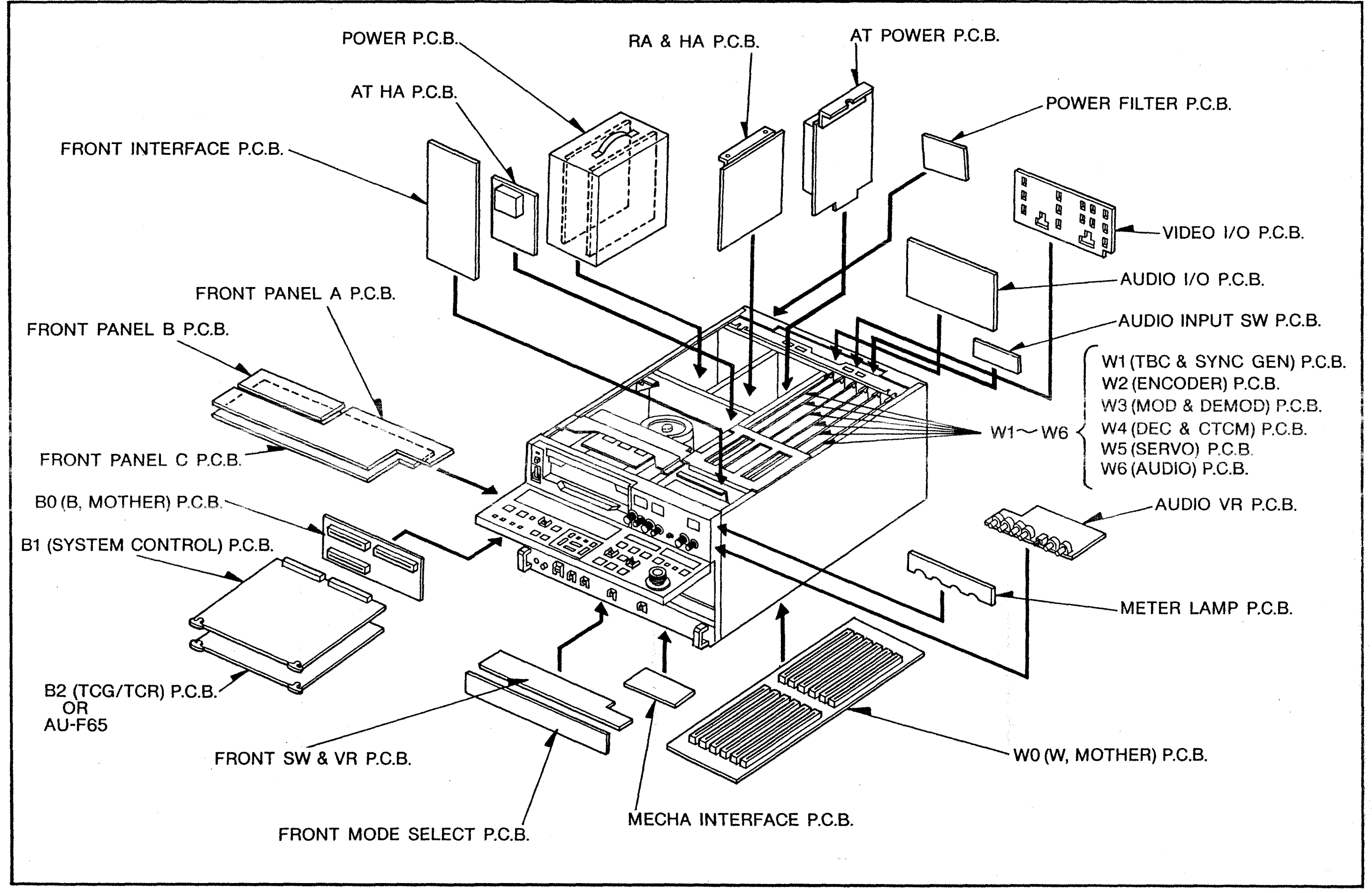
POWER P.C.B.
RA & HA P.C.B.
AT POWER P.C.B.
AT HA P.C.B.
POWER FILTER P.C.B.
FRONT INTERFACE P.C.B.
VIDEO I/O P.C.B.
AUDIO I/O P.C.B.
FRONT PANEL A P.C.B.
AUDIO INPUT SW P.C.B.
FRONT PANEL B P.C.B.
W1 (TBC & SYNC GEN) P.C.B.
W2 (ENCODER) P.C.B.
W3 (MOD & DEMOD) P.C.B.
W4 (DEC & CTCM) P.C.B.
W5 (SERVO) P.C.B.
W6 (AUDIO) P.C.B.
W1～W6
FRONT PANEL C P.C.B.
AUDIO VR P.C.B.
B0 (B, MOTHER) P.C.B.
B1 (SYSTEM CONTROL) P.C.B.
METER LAMP P.C.B.
B2 (TCG/TCR) P.C.B. OR AU-F65
FRONT SW & VR P.C.B.
W0 (W, MOTHER) P.C.B.
MECHA INTERFACE P.C.B.
FRONT MODE SELECT P.C.B.

W5 SERVO/AT P.C.BOARD

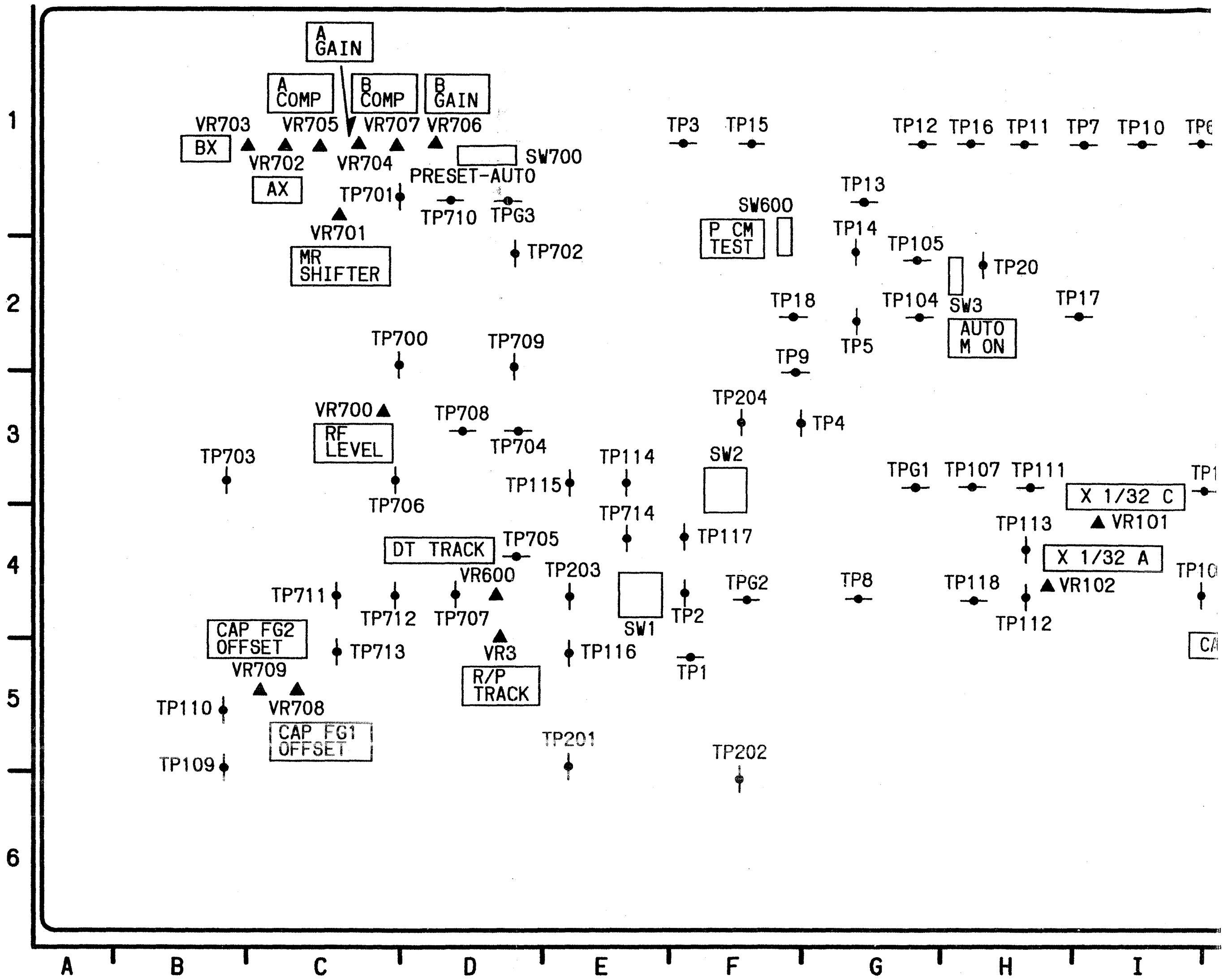
1
2
3
4
5
6
A
B
C
D
E
F
G
H
I
A GAIN
A COMP
B COMP
B GAIN
VR703
VR705
VR707
VR706
BX
VR702
VR704
SW700
PRESET-AUTO
AX
TP701
TP710
TPG3
VR701
MR SHIFTER
TP702
TP3
TP15
TP12
TP16
TP11
TP7
TP10
TP13
SW600
P CM TEST
TP14
TP105
TP20
TP18
TP104
SW3
AUTO M ON
TP17
TP5
TP9
TP700
TP709
VR700
RF LEVEL
TP708
TP704
TP204
TP4
TP703
TP114
SW2
TP115
TPG1
TP107
TP111
X 1/32 C
VR101
TP706
TP714
TP113
DT TRACK
TP705
TP117
X 1/32 A
VR600
TP203
TP711
TPG2
TP8
TP118
VR102
TP2
TP712
TP707
SW1
TP112
CAP FG2 OFFSET
TP713
VR3
TP116
VR709
R/P TRACK
TP1
TP110
VR708
CAP FG1 OFFSET
TP201
TP202
TP109

W5 SERVO/AT

Adjustment	
VC101	J-3
VR1	J-3
VR3	D-4
VR101	I-4
VR102	H-4
VR103	J-4
VR104	J-4
VR105	J-4
VR301	M-2
VR302	M-6
VR303	L-6
VR304	M-5
VR305	M-5
VR306	M-5
VR307	M-5
VR308	L-3
VR309	L-1
VR600	D-4
VR700	C-3
VR701	C-1
VR702	C-1
VR703	C-1
VR704	C-1
VR705	C-1
VR706	D-1
VR707	C-1
VR708	C-5
VR709	C-5

Test Point	
TP1	F-5
TP2	F-4
TP3	F-1
TP4	F-3
TP5	G-2
TP6	I-1
TP7	I-1
TP8	G-4
TP9	F-2
TP10	I-1
TP11	H-1
TP12	G-1
TP13	G-1
TP14	G-2
TP15	F-1
TP16	H-1
TP17	I-2
TP18	F-2
TP19	L-6
TP20	H-2
TP101	J-2
TP102	J-1
TP103	K-2
TP104	G-2
TP105	G-2
TP106	I-3
TP107	H-3
TP108	I-4
TP109	B-5
TP110	B-5
TP111	H-3
TP112	H-4
TP113	H-4
TP114	E-3
TP115	E-3
TP116	E-5
TP117	F-4
TP118	H-4
TP201	E-5
TP202	F-6
TP203	E-4
TP204	F-3
TP302	M-2
TP303	L-6
TP304	L-6
TP306	M-5
TP309	L-5
TP310	M-3
TP311	M-6
TP312	
TP700	
TP701	
TP702	
TP703	
TP704	
TP705	
TP706	
TP707	
TP708	
TP709	
TP710	
TP711	
TP712	
TP713	
TP714	
TPG1	
TPG2	
TPG3	

Switch	
SW1	
SW2	
SW3	
SW600	
SW700	

ADDRESS INFORMATION

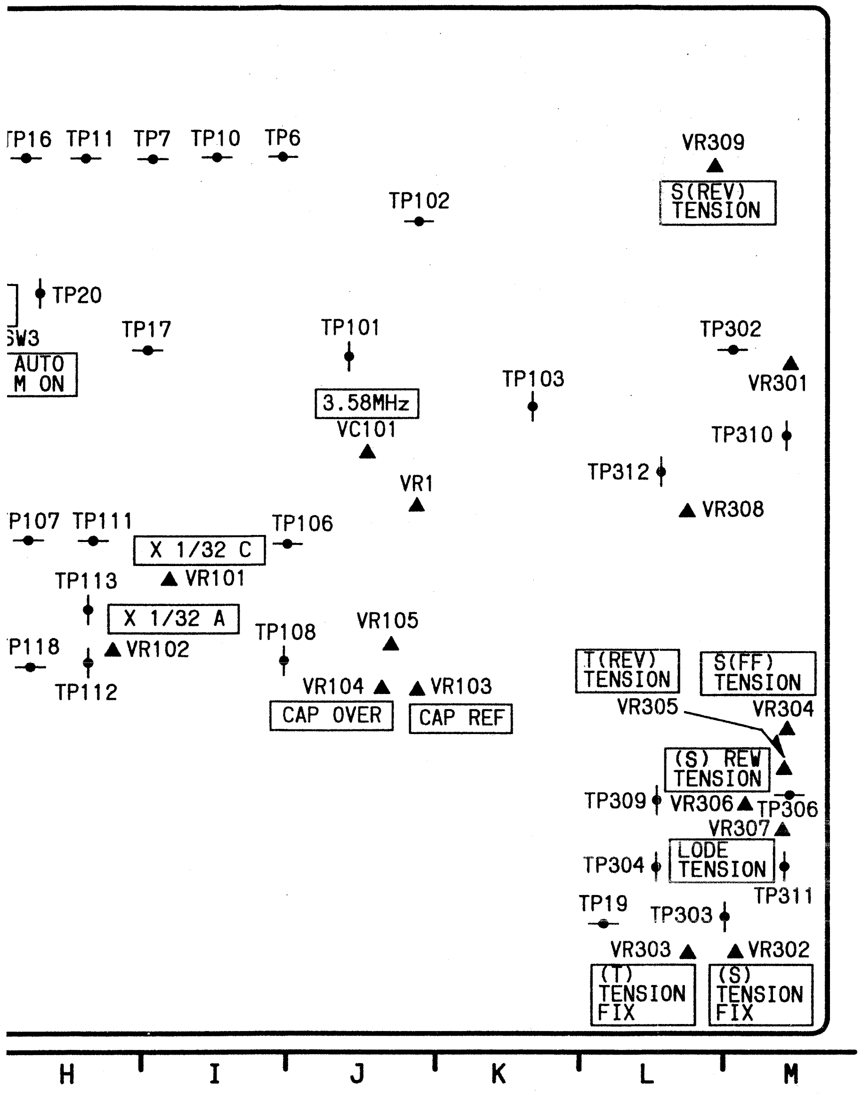
TP16
TP11
TP7
TP10
TP6
VR309
S(REV) TENSION
TP102
TP20
SW3
AUTO M ON
TP17
TP101
TP302
VR301
3.58MHz
VC101
TP103
TP310
VR1
TP312
VR308
TP107
TP111
TP106
X 1/32 C
TP113
VR101
X 1/32 A
TP118
VR102
TP112
TP108
VR105
VR104
VR103
CAP OVER
CAP REF
T(REV) TENSION
S(FF) TENSION
VR305
VR304
(S) REV TENSION
TP309
VR306
TP306
VR307
TP304
LODE TENSION
TP311
TP19
TP303
VR303
VR302
(T) TENSION FIX
(S) TENSION FIX
H
I
J
K
L
M

K-2	TP312	L-3
G-2	TP700	D-2
G-2	TP701	C-1
I-3	TP702	D-2
H-3	TP703	B-3
I-4	TP704	D-3
B-5	TP705	D-4
B-5	TP706	C-3
H-3	TP707	D-4
H-4	TP708	D-3
H-4	TP709	D-2
E-3	TP710	D-1
E-3	TP711	C-4
E-5	TP712	C-4
F-4	TP713	C-5
H-4	TP714	E-4
E-5	TPG1	G-3
F-6	TPG2	F-4
E-4	TPG3	D-1
F-3	**Switch**	
M-2		
L-6	SW1	E-4
L-6	SW2	F-3
M-5	SW3	H-2
L-5	SW600	F-1
M-3	SW700	D-1
M-6		

W6 AUDIO P.C.BOARD

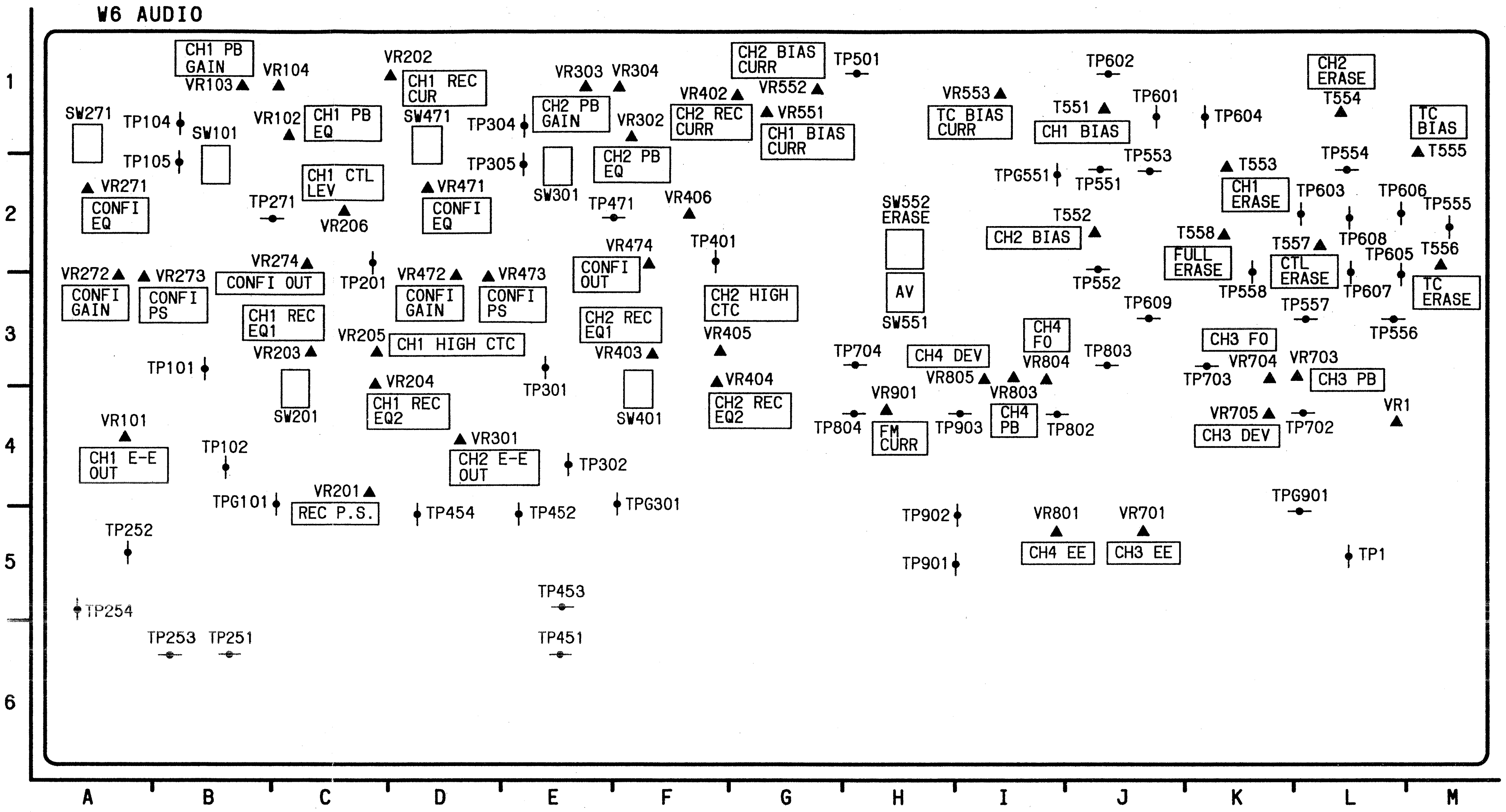
W6 AUDIO
1
2
3
4
5
6
CH1 PB GAIN
VR103
VR104
VR202
CH1 REC CUR
VR303
VR304
CH2 BIAS CURR
TP501
TP602
CH2 ERASE
SW271
TP104
SW101
VR102
CH1 PB EQ
SW471
TP304
CH2 PB GAIN
VR302
VR402
CH2 REC CURR
VR552
VR551
CH1 BIAS CURR
VR553
TC BIAS CURR
T551
CH1 BIAS
TP601
TP604
T554
TC BIAS
T555
TP105
CH1 CTL LEV
TP305
SW301
CH2 PB EQ
TP553
TP554
VR271
CONFI EQ
TP271
VR206
VR471
CONFI EQ
TP471
VR406
TPG551
TP551
T553
CH1 ERASE
TP603
TP606
TP555
SW552 ERASE
T552
CH2 BIAS
T558
FULL ERASE
T557
CTL ERASE
TP608
TP605
T556
TC ERASE
VR272
CONFI GAIN
VR273
CONFI PS
VR274
CONFI OUT
TP201
VR472
CONFI GAIN
VR473
CONFI PS
VR474
CONFI OUT
TP401
AV
SW551
TP552
TP558
TP607
TP609
TP557
CH1 REC EQ1
VR205
CH1 HIGH CTC
CH2 REC EQ1
CH2 HIGH CTC
VR405
TP704
CH4 DEV
CH4 FO
TP803
CH3 FO
TP556
TP101
VR203
VR403
VR805
VR804
VR803
TP703
VR704
VR703
CH3 PB
SW201
VR204
CH1 REC EQ2
TP301
SW401
VR404
CH2 REC EQ2
VR901
CH4 PB
TP804
TP903
TP802
VR705
CH3 DEV
TP702
VR1
VR101
CH1 E-E OUT
TP102
VR301
CH2 E-E OUT
TP302
FM CURR
TPG101
VR201
REC P.S.
TP454
TP452
TPG301
TP902
VR801
VR701
TPG901
CH4 EE
CH3 EE
TP252
TP901
TP1
TP453
TP254
TP253
TP251
TP451
A
B
C
D
E
F
G
H
I
J
K
L
M

W6 AUDIO							
Adjustment		VR306	F-2	TP251	C-6	TP607	L-2
		VR402	G-1	TP252	A-5	TP608	L-2
T551	J-1	VR403	F-3	TP253	C-6	TP609	J-3
T552	J-2	VR404	F-3	TP254	A-5	TP702	L-4
T553	K-2	VR405	F-3	TP271	C-2	TP703	K-3
T554	L-1	VR471	D-2	TP301	E-3	TP704	H-3
T555	M-1	VR472	D-3	TP302	E-4	TP802	I-4
T556	M-2	VR473	D-3	TP304	E-1	TP803	J-3
T557	L-2	VR474	F-2	TP305	E-2	TP804	H-4
T558	K-2	VR551	G-1	TP401	F-2	TP901	I-5
VR1	L-4	VR552	G-1	TP451	E-6	TP902	I-5
VR101	A-4	VR553	I-1	TP452	E-5	TP903	I-4
VR102	C-1	VR701	J-5	TP453	E-5	TPG101	C-4
VR103	B-1	VR703	L-3	TP454	D-5	TPG301	F-4
VR104	C-1	VR704	K-3	TP471	F-2	TPG551	I-2
VR201	C-4	VR705	K-4	TP501	H-1	TPG901	L-4
VR202	D-1	VR801	I-5	TP551	J-2	**Switch**	
VR203	C-3	VR803	I-3	TP552	J-2		
VR204	C-3	VR804	I-3	TP553	J-2	SW101	B-1
VR205	C-3	VR805	I-3	TP554	L-2	SW201	C-4
VR206	C-2	VR901	H-4	TP555	M-2	SW271	A-1
VR271	A-2	**Test Point**		TP556	L-3	SW301	E-2
VR272	A-3			TP557	L-3	SW401	F-4
VR273	A-3	TP1	L-5	TP558	K-2	SW471	D-1
VR274	C-2	TP101	B-3	TP601	J-1	SW551	H-3
VR301	D-4	TP102	B-4	TP602	J-1	SW552	H-2
VR302	F-1	TP104	B-1	TP603	L-2		
VR303	E-1	TP105	B-2	TP605	L-2		
VR304	F-1	TP201	C-2	TP606	L-2		

ADDRESS INFORMATION

TECHNICAL EXPLANATIONS

This section describes general technical concepts of the AU-65, AU-63 and AU-62.

Panasonic

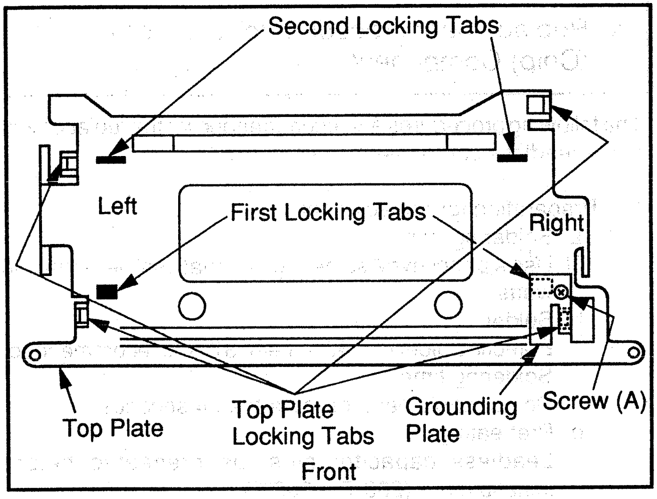

Fig. 12

Method 2 is an alternate method for loading with no tape.

Method 2 - Refer to Fig. 12.

1. Disconnect the AC Cord.
2. Place the Unit in the Service Position (1).
3. Place a jumper between TP6001 on the System Control Section of the VCR Main C.B.A. and GND.
4. Remove Screw (A) and lift (Do Not Remove) the Grounding Plate to access the right side First Locking Tab.
5. Connect the AC Cord.
6. The VCR turns ON automatically and the Cassette Holder Ass'y is loaded. The top of Set Lever L and R is locked by the First Locking Tab (Left and Right). Then the VCR turns OFF.
7. Clear the First Locking Tab (Left and Right) by pressing down the top of the Set Lever L and R.
8. Turn ON the Power Switch.
9. The top of Set Lever L and R is locked by the Second Locking Tab (Same as Step 6).
10. Clear the Second Locking Tab (Left and Right) by pressing down the top of the Set Lever L and R.
11. Turn ON the Power Switch.
12. The Cassette Holder Ass'y is in the down position and the loading operation is completed.

Method 3 is an alternate method for loading with no tape.

Method 3 - Refer to Fig. 12

1. Disconnect the AC Cord.
2. Place the Unit in the Service Position (1) and remove Screw (A). Remove Grounding Plate. Then remove the Top Plate of Cassette Up Ass'y by releasing the 4 Top Plate Locking Tabs shown in Fig. 12.

   Note :
   When removing the Top Plate of Cassette Up Ass'y, work with care so as not to break the locking tabs shown in Fig. 12.

3. Place a jumper between TP6001 on the System Control Section of the VCR Main C.B.A. and GND.
4. Plug in the AC Cord and place the Cassette Holder Ass'y in the down position. Then begin the loading operation sequence.

Note :
To place the Cassette Holder Ass'y in the up position, push the STOP/EJECT Button to eject.

Q. How to remove the Cassette Up Ass'y

1. In the order described in the Disassembly of Cabinet Parts section, remove the Back Cover Unit, VCR Unit and Top Shield Plate Ass'y.
2. Remove 2 Screws (S-11) in Fig. D9, Page 2-3.
3. Remove 2 Screws (S-18), 2 Screws (S-19), in Fig. D11, Page 2-4.

R. Worm Wheel Position in Eject Position

After performing a mechanical alignment, the hole of the Worm Wheel is positioned at the Bottom as shown in Fig. 13. However, when the Eject operation is performed electrically, the position of the hole on the Worm Wheel is slightly shifted from the original adjustment point. This is normal operation. Do not try to readjust the Worm Gear position.

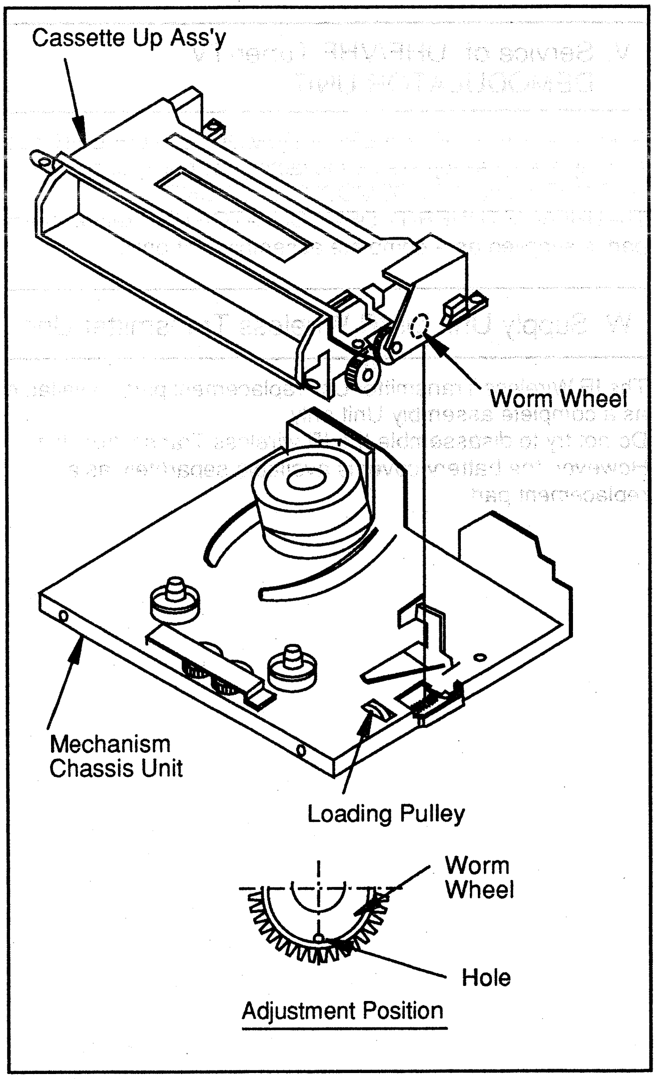

Fig. 13

S. Black Screws on the Chassis

Black Screws are used on the Mechanism Chassis to identify screws that require adjustment.

T. Variable Voltage Isolation Transformer

Because a Hot Chassis Ground is present in the Switched Mode Power Supply Circuit, an Isolation Transformer must be used. Also, in order to have the ability to increase the input voltage slowly, when troubleshooting this type Power Supply Circuit, a variable isolation transformer is required.

U. High Voltage Component

Avoid touching the following High Voltage Components : CRT C.B.A., terminals on Deflection Yoke, Anode Cap, Q551 and terminals of Flyback Transformer on TV Main C.B.A.

V. Service of UHF/VHF Tuner/TV DEMODULATOR UNIT

Since the UHF/VHF TUNER/TV DEMODULATOR UNIT has already been pre-adjusted at the factory, do not try to adjust the UHF/VHF TUNER/TV DEMODULATOR UNIT.
The UHF/VHF TUNER/TV DEMODULATOR UNIT replacement part is supplied as a complete assembly unit only.

W. Supply Unit for IR Wireless Transmitter Unit

The IR Wireless Transmitter Unit replacement part is available as a complete assembly Unit only.
Do not try to disassemble the IR wireless Transmitter Unit. However, the battery cover is available separately as a replacement part.

X. Replacement procedure for Leadless (Chip) Component

The following procedures are recommended for the replacement of the leadless components used in this Unit.

1. Preparation for replacement
   a. Soldering Iron
      Use a pencil-type soldering iron that uses less than 30 watts.
   b. Solder
      Eutectic Solder (Tin 63%, Lead 37%) is recommended.
   c. Soldering time
      Do not apply heat for more than 4 seconds.
   d. Preheating
      Leadless capacitor must be preheated before installation. - (266°F ~ 302°F)
      (130°C ~150°C) for about two minutes.

   Note:
   a. Leadless component must not be reused after removal.
   b. Excessive mechanical stress and rubbing of the component electrode must be avoided.

2. Removing the leadless component
   Grasp the leadless component body with tweezers and alternately apply heat to both electrodes. When the solder on both electrodes is melted, remove leadless component with a twisting motion.

   Note:
   a. Do not attempt to lift the component off the board until the component is completely disconnected from the board by a twisting action.
   b. Be careful not to break the copper foil on the printed circuit board.

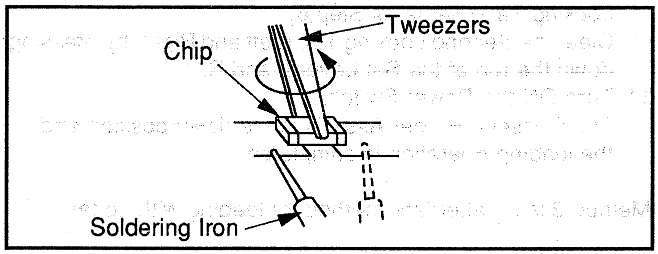

Fig. 14-1

3. Installing the leadless component
   a. Presolder the contact points on the circuit board.

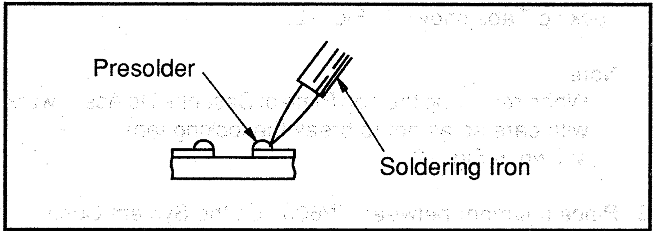

Fig. 14-2

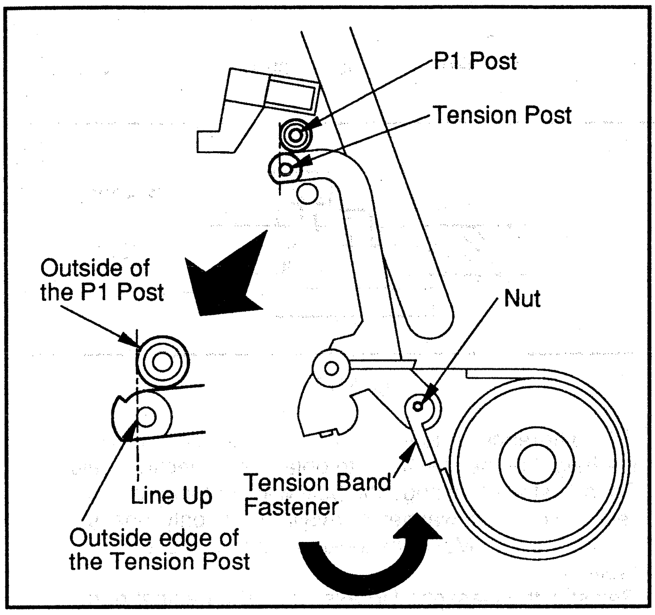

Fig. M7

5. MEASUREMENT AND ADJUSTMENT OF BACK TENSION

Purpose :

To fine adjust the Back Tension so that the tape runs smoothly with a constant tension.

Symptom of Misadjustment :

1) If the tape tension is less than the specified value, the tape cannot come into proper contact with the Video Heads, resulting in poor picture playback.
2) If the tape tension is too high, the tape will soon be damaged.

A : Measurement Procedure

*Equipment Required :

Back Tension Meter (Made in U.S.A., Purchase Locally)
VHS Cassette Tape (120-Minute Tape)

*Specification .... 20 ~ 25g

1. Remove the Top Cover.
2. Play back a T120 cassette tape from its beginning for approx. 10 to 20 seconds, until the tape's movement has stabilized.
3. Insert a Tension Meter into tape path and confirm the reading.
4. If the reading is out of specification, do the adjustment procedure.

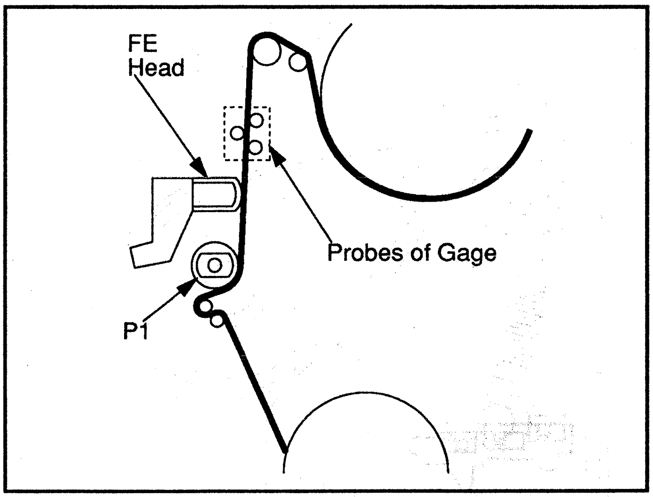

Fig. M8

Note :

1. Be sure that the three probes of the meter are all in solid contact with the tape, but out of contact with any other parts while measuring.
2. It is recommended that measurements be taken three times because the tension meter is very sensitive to external vibrations.

B : Adjustment Procedure

1. Remove the Cassette Up Ass'y. Then re-position the Tension Spring on the Tension Arm Base Teeth in either direction as indicated by the arrow to obtain the specified tension. (See Fig. M9).
2. Re-position the Tension Spring toward the front to increase tension, or toward the rear to decrease tension.
3. Reinstall the Cassette Up Ass'y and verify tension with the meter once again.
4. Reinstall the cabinet parts.

Note :

If the specified tension is not obtained even if the Tension Spring is re-positioned, replace the Tension Spring, replace the Tension Band, clean the Reel Table, or be sure there is no dust between the Tension Band and the Reel Table.

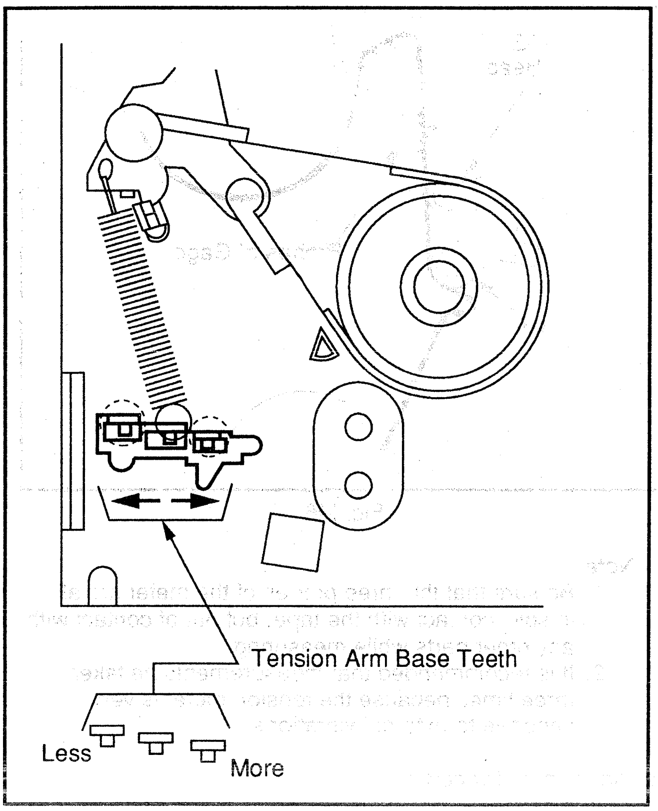

Fig. M9

6. HEIGHT ADJUSTMENT OF REEL TABLES

Purpose :
To properly align the height of the tape wound on the Supply and Take-Up Reels.

Symptom of Misadjustment :
If the height of the tape is not properly aligned, the tape will eventually be damaged.

* Equipment Required :

Post Adjustment Plate	(VFKS0010)
Reel Table Height Fixture	(VFKS0009)

* Specification .... 0 ± 0.1mm

1. Remove the Cassette Up Ass'y.
2. Place the Post Adjustment Plate over the reels, and put the fixture on it. Set the fixture to zero ("0") and ensure that the foot of the fixture touches the cut-out portion of the plate.

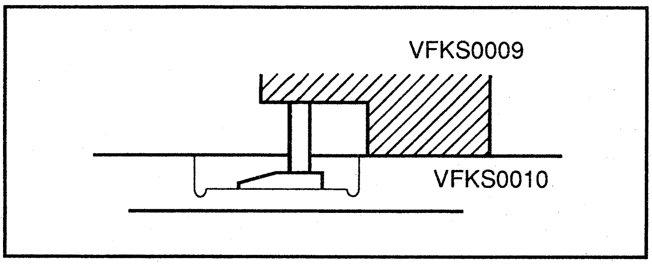

Fig. M10-1

3. Then measure the top portion of the Reel Table and compare the difference against the result of the measurement taken in the above step. Do the same for the other reel table.

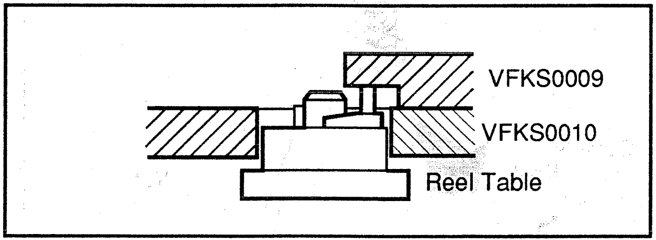

Fig. M10-2

4. If the difference is more than 0.1mm (higher or lower), adjust the height of the reel table to obtain the specified height.
5. For adjustment, change the poly washer located under the reel table. (The washer is available in only one size of 0.13mm thick.) Move the locking tab to remove the reel table.
6. Reinstall the Cassette Up Ass'y and the cabinet parts.

7. HEIGHT ADJUSTMENT OF TAPE GUIDE POSTS (PRELIMINARY ADJUSTMENT)

*Equipment Required :

Lock Screw Wrench	(VFKS0032)
Post Adjustment Plate	(VFKS0010)
Reel Table Height Fixture	(VFKS0009)
Post Adjustment Screwdriver	(VFK0329)

7-A. HEIGHT ADJUSTMENT OF P2 AND P3

Purpose :
To properly align the position of the tape with the Cylinder Lead so that the tape runs with stability.

Symptom of Misadjustment :
1) Since the Envelope Waveform Signal cannot be tracked properly, the Playback picture will be poor.
2) Since the tape does not run smoothly, the tape will eventually be damaged.
3) Tape interchangeability is poor.

1. Remove the Cassette Up Ass'y.
Then install the Post Adjustment Plate.

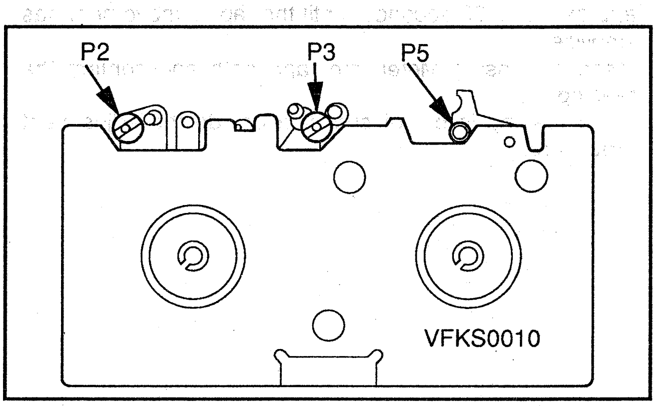

Fig. M11-1

2. First, lower all posts to match the height condition as shown in Fig. M11-2.

> The upper edge of the lower tape guide on each post should be below the bottom of the foot. Loosen Black Lock Screws located at the lower portion of the posts (P2 & P3) using Lock Screw Wrench, then turn the posts with a Post Adjustment Screwdriver.

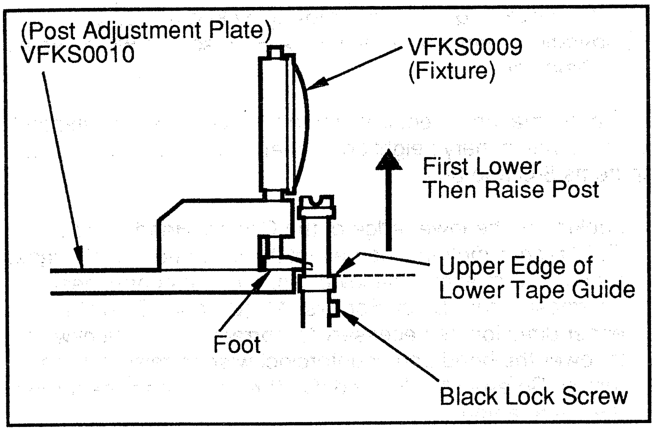

Fig. M11-2

3. Place the fixture on the Post Adjustment Plate and fit the foot to the Adjustment Plate as shown in Fig. M11-2.
   (The foot of the fixture should be fully lowered until it touches the plate.)
4. Set the fixture to zero ("0") and slowly raise the post until it just touches the foot.
   When the foot touches the post, it should fit as shown in Fig. M11-3 (b). For adjustment of P2 and P3, use a Post Adjustment Screwdriver.

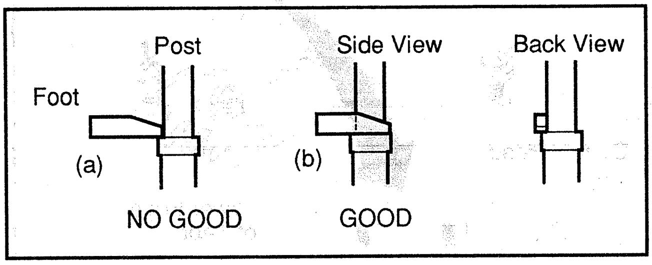

Fig. M11-3

Note:
Upon completion of adjustment, tighten the Black Lock Screws on P2 and P3 using the Lock Screw Wrench.

7-B. HEIGHT ADJUSTMENT OF P5 ARM UNIT

Purpose :
To properly align the Phase and Speed Controls during the CUE/REVIEW Modes and perform the CUE/REVIEW operations without any small additional noise in the picture.

Symptom of Misadjustment :
1) Noticeable noise appears in the picture.
2) The tape will eventually be damaged.

*Equipment Required :

Post Adjustment Plate	(VFKS0010)
Reel Table Height Fixture	(VFKS0009)
Nut Driver (5.5mm)	Purchase Locally

*Specification .... 0 (+0, -0.08) mm

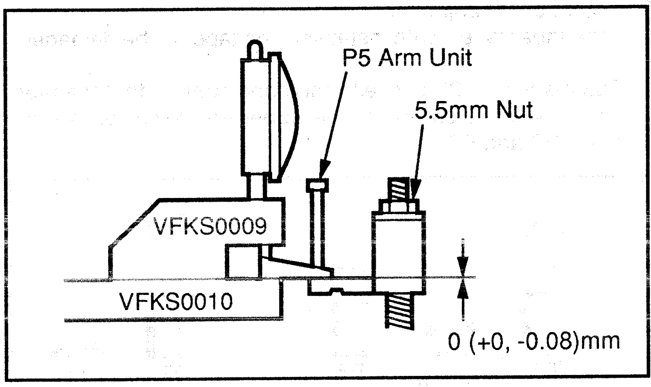

Fig. M11-4

1. Place the Post Adjustment Plate over the Reels, and put the Fixture on it. Set the Fixture to zero ("0") when the foot just touches the Post Adjustment Plate.
2. Slightly raise the P5 post above the plate by turning the 5.5mm Nut counterclockwise. Place the foot on the post as shown in Fig. M11-4.
3. Then slowly turn the 5.5mm Nut clockwise until the fixture reads the specified height.
4. Remove the Post Adjustment Plate. Reinstall the Cassette Up Ass'y and the cabinet parts.

Note:
Upon completion of the above procedure, play back the tape and confirm that the tape runs properly without curling between the lower and upper limits of the P5 Post. Also confirm that the tape is running smoothly.
If adjustment is required, slightly turn the 5.5mm Nut until the curling smooths out.

8. TAPE INTERCHANGEABILITY ADJUSTMENT (FINAL ADJUSTMENT)

Note :
To perform these adjustment/confirmation procedures, set Tracking to the Neutral position.

*Equipment Required :

Dual Trace Oscilloscope	
VHS Alignment Tape	(VFMS0001H6)
Post Adjustment Screwdriver	(VFK0329)
H-Position Adjustment Screwdriver	(VFKS0080)
Lock Screw Wrench	(VFKS0032)

8-A. CONFIRMATION OF TAPE TRAVEL

Purpose :
To be sure that the tape runs is smoothly.

Symptom of Misadjustment :
If the tape travels with instability, the tape will be damaged.

1. Play back a T120 cassette tape and confirm that the tape travels without curling at the upper and lower guides on posts P2 and P3.

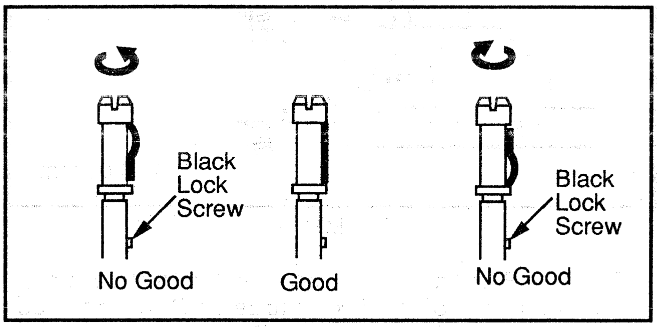

Fig. M12

2. If curling is apparent, adjust the height of the posts by turning the top of the post with the Post Adjustment Screwdriver (for P2 & P3).

   Note:
   Before turning P2 and P3, slightly loosen the Black Lock Screw using the Lock Screw Wrench.

8-B. CONFIRMATION OF A/C HEAD HEIGHT

The height of the A/C Head replacement part assembly has already been adjusted at the factory.

Purpose :
To be sure the tape runs properly along the Control Head.

Symptom of Misadjustment :
If the control signal is not properly picked up, Servo Operation cannot be achieved. A Blue screen will be seen in Playback.

This confirmation is required when the A/C Head is replaced and for a preliminary height adjustment. For final adjustments, do Items 8-C and 8-D.

1. Looking at the lower edge of the Control Head with the T120 tape in motion, ensure that the lower edge of the tape runs 0.25mm above the lower edge of the control head. If it doesn't, turn Black Screws (A), (B), and (C) slightly in either direction as necessary to correct it. Turn clockwise to lower the head and counterclockwise to raise it. When turning Screws (A), (B), and (C), they must each be turned the same amount.

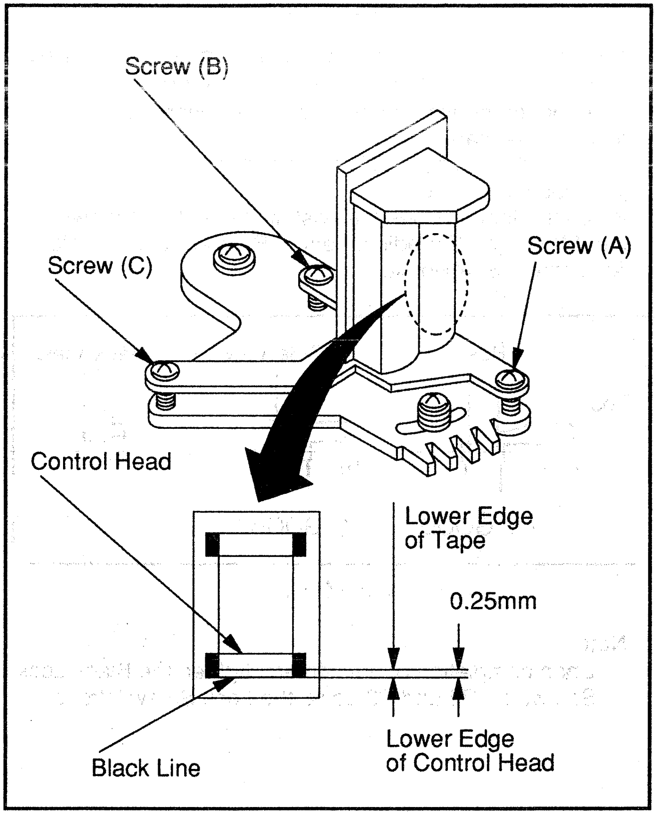

Fig. M13

1. GENERAL (FOR NTSC: AU-665/65/63/62 & PAL: AU-65/63/62)

1-1. Introduction

Since its introduction in 1986, the MII format has played a key role in the world of broadcasting and professional video production. MII VTRs were also used for by America's NBC and South Korea's KBS to cover the 1988 Seoul Olympics, and are in daily use with broadcasters throughout Europe, MI has drawn worldwide praise for its outstanding performance, superior picture and sound quality, 95–minute recording capability and compact, lightweight design. Above all, though, its ability to support integrated use from ENG and EFP to studio editing and automated transmission. New we are introducing a new generation of MII equipment, incorporating innovative technology which responds to the user needs that emerged in the four years since MII's inception.

This new lineup brings professional video users outstanding quality to advanced features, easy operation and high cost–performance ratio.

We shall introduce the recording system, signal processing and other notable features of the M II Format in this report.

AU-665 (NTSC)

Video

Television Format:	NTSC: 525 lines, 60 fields
Modulation System:	Y: Frequency Modulation C: Time compressed multiplexing
Bandwidth:	
Component Y:	30Hz~4.5MHz, +0.5/−3.0dB
C (P_B, P_R):	30Hz~1.5MHz, +0.5/−3.0dB
S/N Ratio:	
Component Y:	Better than 50dB
Composite Y:	Better than 48dB
C (AM, PM):	Better than 52dB
YC Delay:	Less than 20ns
K Factor:	Less than 2%
Differential Gain:	Less than 2%
Differential Phase:	Less than 2°
Linearity:	Less than 3% (Component)

Audio

Linear (CH1/CH2)	
Frequency Response:	50Hz~15kHz, +2.0/−3.0dB
S/N Ratio:	Better than 56dB
(at 3% distortion)	(Dolby NR off)
(CCIR)	Better than 74dB (Dolby NR on)
Distortion:	Less than 0.8% at 1kHz standard
Cross Talk:	Less than −60dB (1kHz)
Erase Ratio (at 1kHz):	Less than −70dB
Wow and Flutter:	Less than 0.15% (DIN WTD)
Phase:	±20° (at 15kHz)
FM (CH3/CH4)	
Frequency Response:	20Hz~20kHz, +1.0/−2.0dB
Dynamic Range:	More than 80dB
Distortion:	Less than 0.5% at 1kHz standard
Cross Talk:	Less than −65dB (1kHz)
Phase:	±10° (at 15kHz)

Table 1(a) Specifications for AU–665 (NTSC)

AU-65/63/62 (NTSC)

Video

Television Format:	NTSC: 525 lines, 60 fields
Modulation System:	Y: Frequency Modulation C: Time compressed multiplexing
Bandwidth:	
Component Y:	30Hz~4.5MHz, +1.0/−4.0dB
C (P_B, P_R):	30Hz~1.5MHz, +0.5/−3.0dB
S/N Ratio:	
Component Y:	Better than 49dB
Composite Y:	Better than 47dB
C (AM, PM):	Better than 50dB
YC Delay:	Less than 20ns
K Factor:	Less than 2%
Differential Gain:	Less than 3%
Differential Phase:	Less than 3°
Linearity:	Less than 3% (Component)

Audio

Linear (CH1/CH2)	
Frequency Response:	50Hz~15kHz, +2.0/−3.0dB
S/N Ratio:	Better than 56dB
(at 3% distortion)	(Dolby NR off)
(CCIR)	Better than 74dB (Dolby NR on)
Distortion:	Less than 1.0% at 1kHz standard
Erase Ratio (at 1kHz):	Less than −65dB
Wow and Flutter:	Less than 0.15% (DIN WTD)
FM (CH3/CH4)	
Frequency Response:	20Hz~20kHz, +1.0/−2.0dB
Dynamic Range:	More than 80dB
Distortion:	Less than 0.5% at 1kHz standard
Cross Talk:	Less than −65dB (1kHz)

Table 1(b) Specifications for AU–65/63/62 (NTSC)

AU-65/63/62 (PAL)

Video	
Television Format:	PAL: 625 lines, 50 fields
Modulation System:	Y: Frequency Modulation C: Time compressed multiplexing
Bandwidth:	
Component Y:	25Hz~5.0MHz, +1.0/−2.0dB
C (P_B, P_R):	25Hz~1.8MHz, +0.5/−2.0dB
S/N Ratio:	
Component Y:	Better than 47dB
Composite Y:	Better than 48dB
C (AM, PM):	Better than 50dB
YC Delay:	Less than 20ns
K Factor:	Less than 2% (Y)
Differential Gain:	Less than 3%
Differential Phase:	Less than 3°
Linearity:	Less than 3% (Component)
Audio	
Linear (CH1/CH2)	
Frequency Response:	50Hz~15kHz, +2.0/−3.0dB
S/N Ratio: (at 3% distortion)	Better than 56dB (Dolby NR off)
Distortion:	Less than at 1kHz standard
Cross Talk:	Less than −65dB (1kHz)
Erase Ratio (at 1kHz):	Less than −65dB
Wow and Flutter:	Less than 0.15% (DIN WTD)
Phase:	±20° (at 10kHz)
FM (CH3/CH4)	
Frequency Response:	20Hz~20kHz, +1.0/−2.0dB
Dynamic Range:	More than 80dB
Distortion:	Less than 0.5% at 1kHz standard
Cross Talk:	Less than −65dB (1kHz)

Table 1(c) Specifications for AU−65/63/62 (PAL)

1−2. Tape Format

In order to achieve the above−mentioned targets (recording time, frequency response, S/N ratio), we have established the format and its dimensions by total evaluation of the following items:

1) Tape length − tape thickness and cassette size
2) Relative speed − drum diameter
3) Track width
4) FM carrier frequency & deviation
5) Tape CNR (carrier to noise ratio)
(See next page).

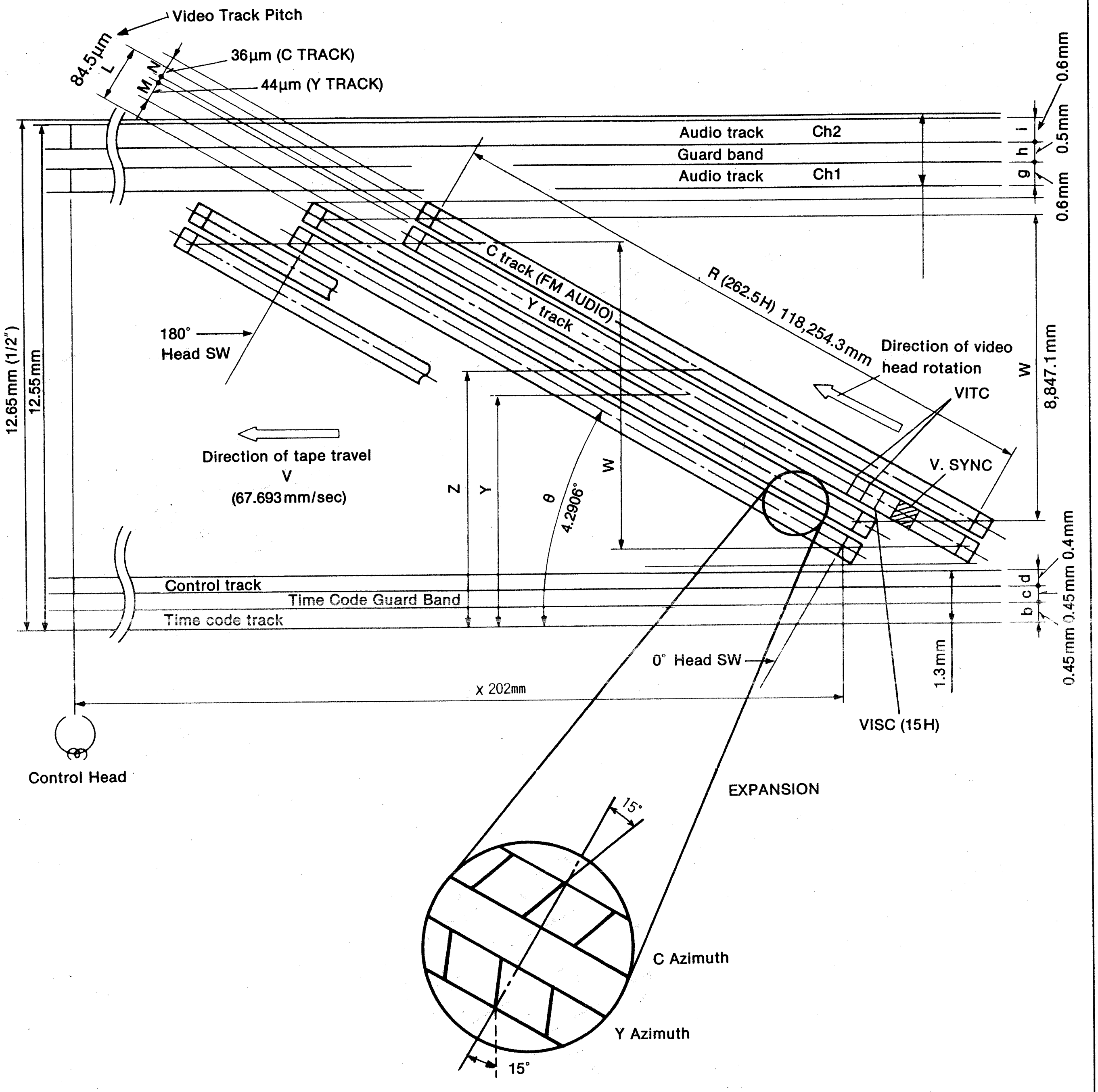
Video Track Pitch
84.5μm
L
M
N
36μm (C TRACK)
44μm (Y TRACK)
Audio track Ch2
Guard band
Audio track Ch1
i
h
g
0.6mm
0.5mm
0.6mm
C track (FM AUDIO)
Y track
R (262.5H) 118,254.3mm
Direction of video head rotation
W
8,847.1mm
VITC
V. SYNC
180° Head SW
12.65mm (1/2")
12.55mm
Direction of tape travel
V
(67.693mm/sec)
Z
Y
W
θ
4.2906°
Control track
Time Code Guard Band
Time code track
d
c
b
0.4mm
0.45mm
0.45mm
1.3mm
0° Head SW
x 202mm
VISC (15H)
Control Head
EXPANSION
15°
C Azimuth
Y Azimuth
15°

L :	Video track pitch	84.5μm
M :	Y track width	44μm
N :	C track width (FM Audio)	36μm
R :	Video track length	118,254.3μm
W :	Effective video width	8,847.1μm
Y :	Height of Y track center	6,050μm
Z :	Height of C track center	6,092.1μm
θ :	Video track inclination angle	4.2906°
X :	Control signal recording position	202,000μm

b :	Time code track width	450μm
c :	T/C guard width	450μm
d :	Control track width	400μm
g :	Audio track Ch1 width	600μm
h :	Audio guard width	500μm
i :	Audio track Ch2 width	600μm
	Tape travel speed :	67.693mm/sec
	Relative speed :	7.09m/sec
	Tape width :	12.65mm
αH :	H alignment	2.5H

Fig. 2-1(a) MII VTR Tape Format (NTSC)

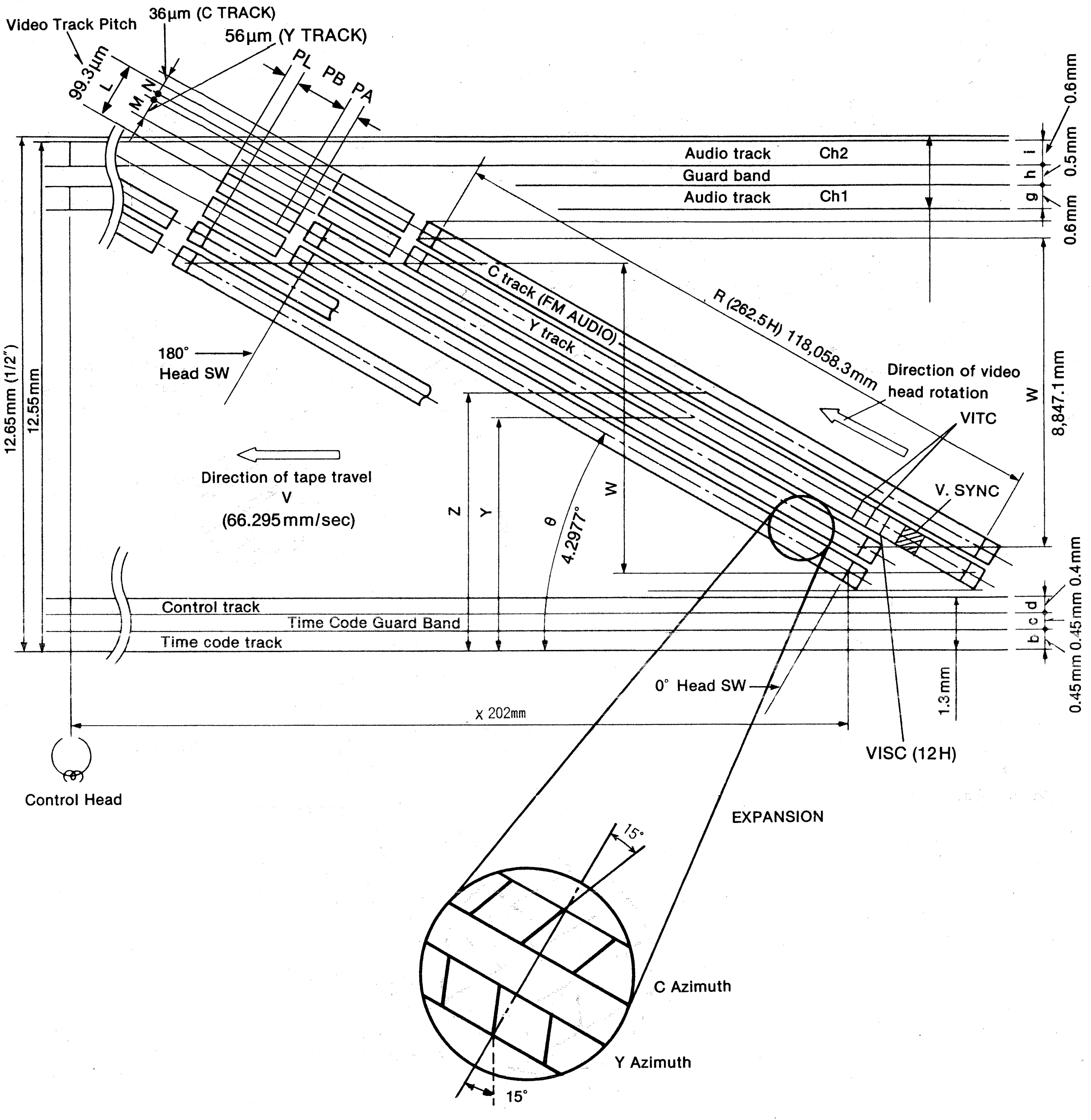
Video Track Pitch
36µm (C TRACK)
56µm (Y TRACK)
99.3µm
L
M
N
PL
PB
PA
Audio track Ch2
Guard band
Audio track Ch1
0.6mm
0.5mm
0.6mm
g
h
i
C track (FM AUDIO)
Y track
R (262.5H) 118,058.3mm
Direction of video head rotation
W
8,847.1mm
VITC
V. SYNC
180° Head SW
Direction of tape travel
V
(66.295mm/sec)
12.65mm (1/2")
12.55mm
Z
Y
θ
4.2977°
W
Control track
Time Code Guard Band
Time code track
b
c
d
0.4mm
0.45mm
0.45mm
1.3mm
0° Head SW
X 202mm
VISC (12H)
Control Head
EXPANSION
15°
C Azimuth
Y Azimuth
15°

L : Video track pitch 99.3µm
M : Y track width 56µm
N : C track width (FM Audio) 36µm
R : Video track length 118,058.3µm
W : Effective video width 8,847.1µm
Y : Height of Y track center 6,050µm
Z : Height of C track center 6,099.5µm
Θ : Video track inclination angle .... 4.2977°
PA: Pre Amble 415.6µm
PB: Data 11,900.2µm
PC: Post Amble 415.6µm

X : Control signal recording position 202,000µm
b : Time code track width 450µm
c : T/C guard width 450µm
d : Control track width 400µm
g : Audio track Ch1 width 600µm
h : Audio guard width 500µm
i : Audio track Ch2 width 600µm
Tape travel speed: .... 66.295mm/sec.
Relative speed: .... 5.90m/sec.
Tape width: 12.65mm
αH: H alignment 3.5H

Fig. 2–1(b) MII VTR Tape Format (PAL)

2. CASSETTE TAPE AND HEADS

2–1. Cassette

For the determination of cassette size, we took into account the points of recording length and good maneuverability. We decided to employ a size near equivalent to the VHS cassette.

2–2. Employment of metal particle tape, and amorphous heads

To fulfill the requirements of high picture quality as well as 90 minute running time, and a near equivalent to the VHS cassette it was essential to raise the carrier–to–noise signal (CNR) of the tape. In this respect, we employed metal particle tape (13.5 um thick) that has excellent high frequency characteristics (output characteristics, CNR) and is able to ensure sufficient output for longitudinal track recording (audio, control, time code).

To use metal particle tape, we needed to employ amorphous heads as video heads to improve the playback signal to noise ratio. In this way, excellent characteristics were obtained in recording and playback.
Using the new tape and heads, greater reliability characteristics are obtained such as drop–out resistance and endurance.

3. TAPE TRANSPORT SYSTEM

Figure 3–1 shows the tape transport system of the M II Format VTR. In order to assure stable travel of the thin metal particle tape at a speed ranging from 0 (still) – to x(+–32), the angle at which tape is wrapped around inclined fixed posts is minimized. All other guide posts are the rotating type, thereby reducing tape traveling load. Closed tension servo is applied to both supply and take–up reels to accurately control the tape tension and to prevent the tape from being damaged.

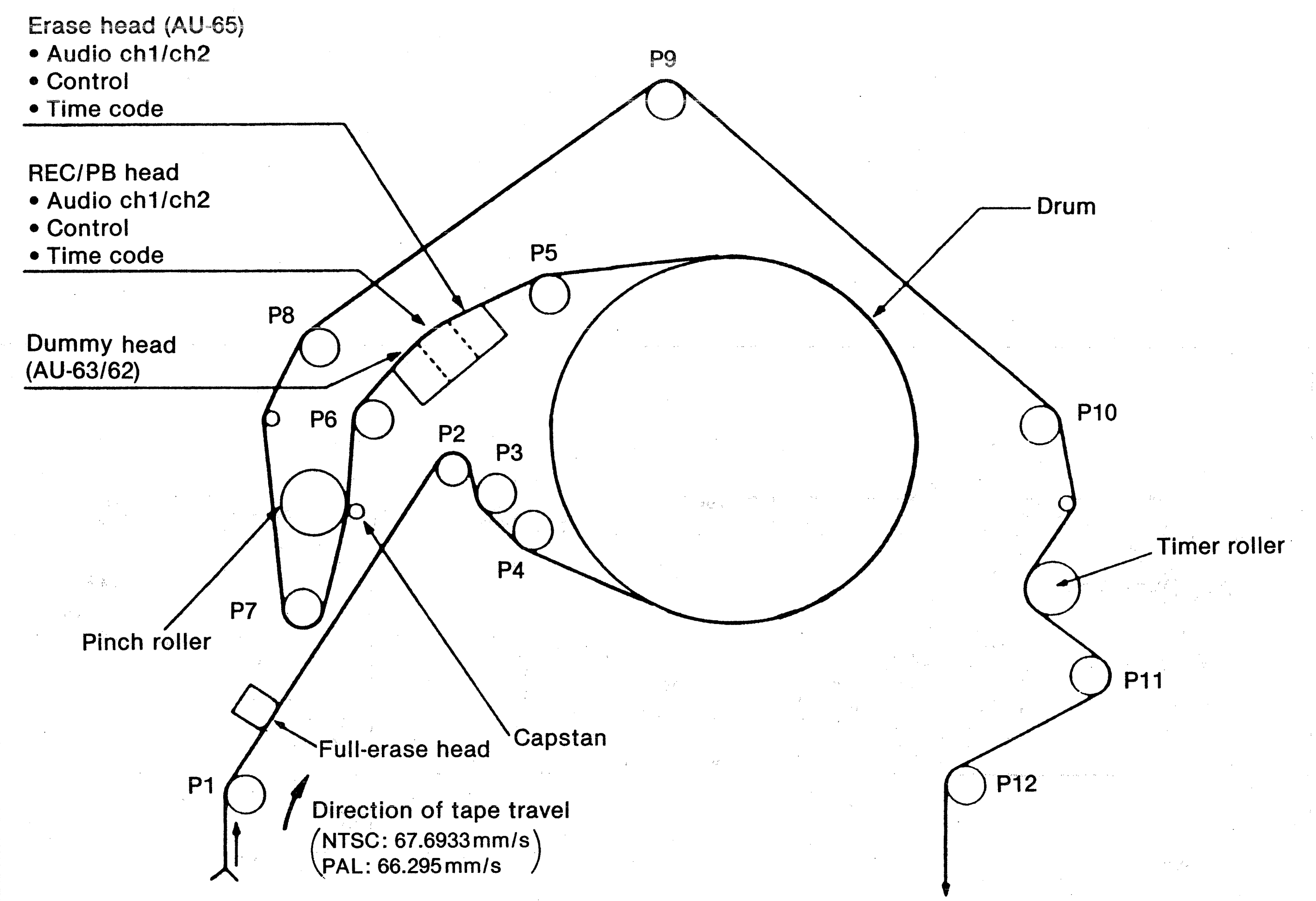
Erase head (AU-65)
• Audio ch1/ch2
• Control
• Time code
REC/PB head
• Audio ch1/ch2
• Control
• Time code
Dummy head
(AU-63/62)
P9
Drum
P5
P8
P6
P2
P3
P4
P10
Timer roller
P7
Pinch roller
P11
Full-erase head
Capstan
P1
P12
Direction of tape travel
(NTSC: 67.6933mm/s
PAL: 66.295mm/s)

Fig. 3–1 Tape Transport System and Head Arrangement

4. RECORDING & PLAYBACK METHOD

4-1. Video signal process

MII system employs component recording method which has two separate Y and C tracks on the tape for video signal recording.
When making the recording, the incoming composite video signal is first separated by Decoder circuit into Y, Pb and Pr.
These Pb and Pr signals (each horizontal line) are then compressed by CTCM (Chroma Time Compressed Multiplex) circuit into one horizontal line called CTCM signal and it is supplied to FM modulator.
Where as the Y signal is immediately supplied to FM modulator.
The both Y and CTCM signals are separately modulated with FM and recorded at peculiar Y and C tracks on the tape.
During playback mode, the playback RF Y and C signals are demodulated by FM and these are supplied to TBC (Time Base Corrector) circuit.
The TBC carries out the jitter reduction and expansion of CTCM signal to original Pb, Pr signals.
After TBC correction, Y and C signals are encoded into output signal as shown in Figure 4–1.
(Note that the FM audio signal is modulated by FM with the CTCM signal.)

4-2. Time axis compressing and expansion process

For a system in which the time axis used for color difference signals is compressed during recording and is expanded during playback, a highly accurate time base corrector (TBC) is required because the residual jitter increases during expansion. In M II Format, a pilot burst signal for jitter correction is superimposed and recorded during the period of horizontal blanking, and a stable writing clock for the TBC is reproduced in the playback process by the use of horizontal synchronizing and pilot burst signals superimposed and recorded, thereby reducing the residual jitter.

The Y signal is recorded with a pilot burst signal synchronized to the horizontal sync signal and added to its horizontal blanking (back porch). A horizontal sync signal and pilot burst signal are added to the horizontal blanking of the Pb signal. Both signals are separately compressed in time axis and are recorded as a time division multiplex signal.

Time base errors in the playback signal can be removed by using the horizontal synchronizing and pilot burst signals for Y/C timing, solving the problem of timing errors which has been the weak point in the time axis compression recording system. The recording signal waveform of M II format is shown in figure 4–2 (a) or (b).

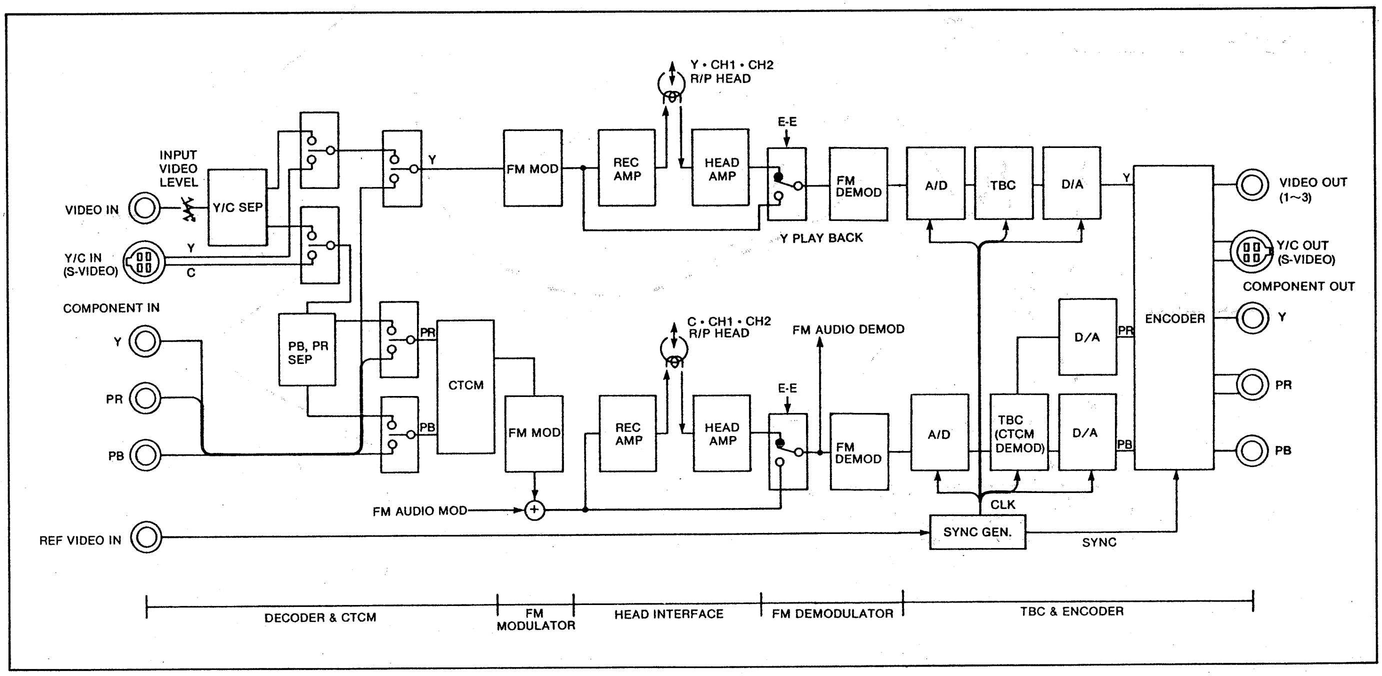
Y • CH1 • CH2
R/P HEAD
E-E
INPUT
VIDEO
LEVEL
Y
FM MOD
REC AMP
HEAD AMP
FM DEMOD
A/D
TBC
D/A
Y
VIDEO OUT (1~3)
VIDEO IN
Y/C SEP
Y/C IN (S-VIDEO)
Y
C
Y PLAY BACK
Y/C OUT (S-VIDEO)
COMPONENT OUT
COMPONENT IN
Y
PB, PR SEP
PR
C • CH1 • CH2
R/P HEAD
FM AUDIO DEMOD
D/A
PR
ENCODER
Y
PR
CTCM
E-E
PB
FM MOD
REC AMP
HEAD AMP
FM DEMOD
A/D
TBC (CTCM DEMOD)
D/A
PB
PR
PB
FM AUDIO MOD
CLK
REF VIDEO IN
SYNC GEN.
SYNC
DECODER & CTCM
FM MODULATOR
HEAD INTERFACE
FM DEMODULATOR
TBC & ENCODER

Fig. 4–1 Block Diagram of Video Signal Process

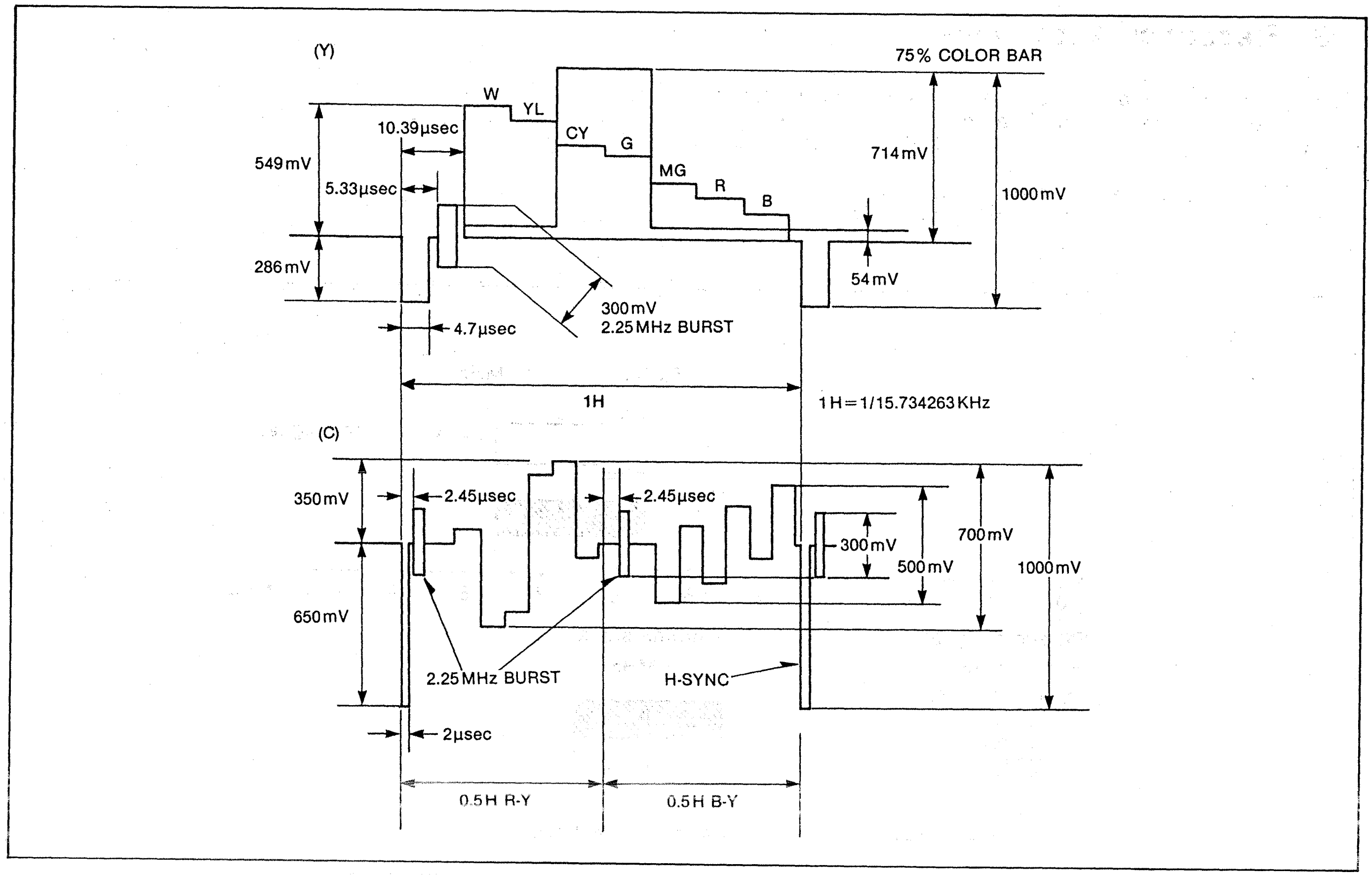
(Y)
75% COLOR BAR
W
YL
CY
G
MG
R
B
10.39µsec
5.33µsec
549mV
286mV
714mV
1000mV
54mV
300mV
2.25MHz BURST
4.7µsec
1H
1H=1/15.734263KHz
(C)
350mV
650mV
2.45µsec
2.45µsec
300mV
500mV
700mV
1000mV
2.25MHz BURST
H-SYNC
2µsec
0.5H R-Y
0.5H B-Y

Fig. 4-2(a) Waveform of CTCM Signal (NTSC)

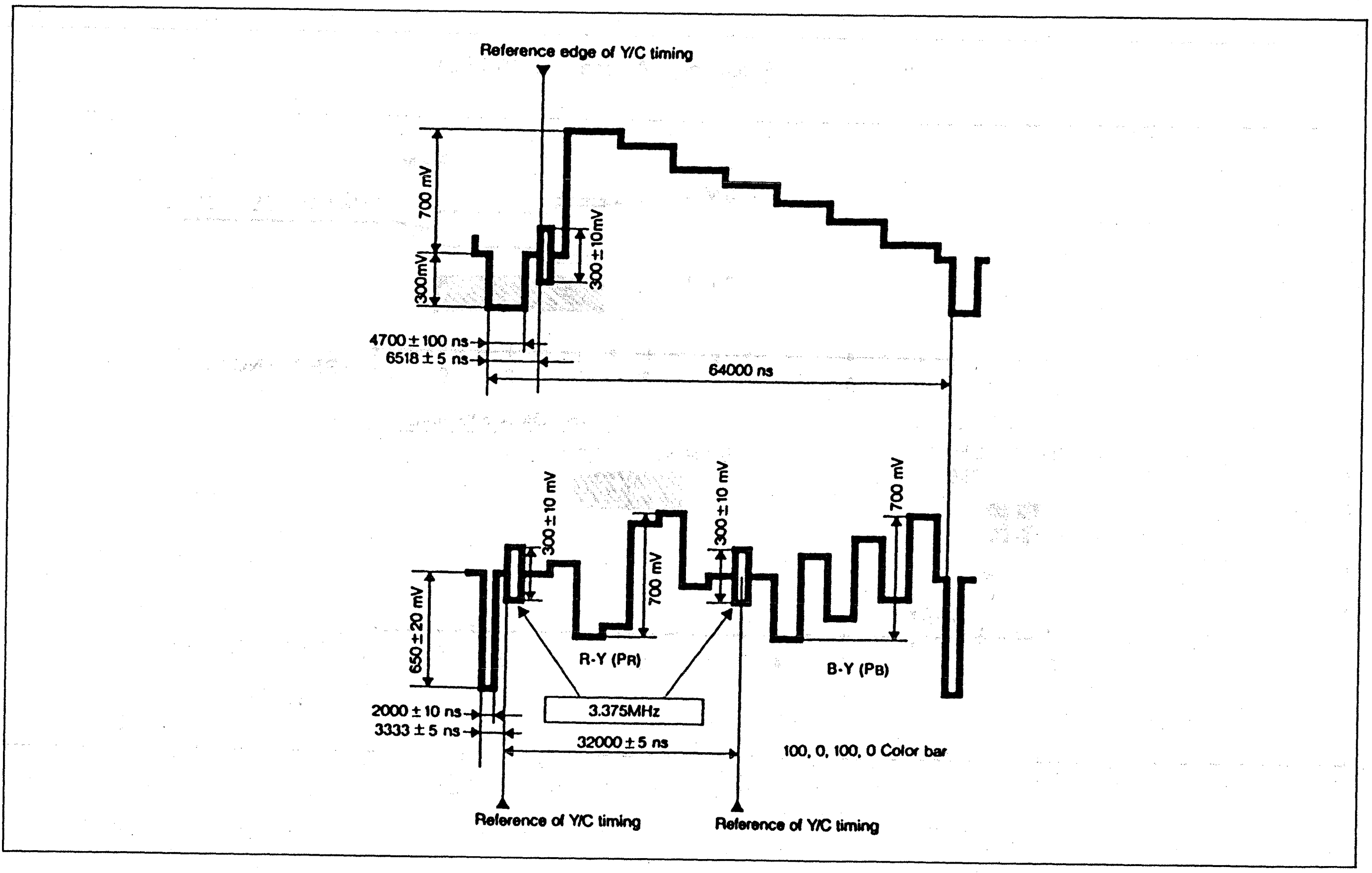
Reference edge of Y/C timing
700 mV
300mV
300±10mV
4700±100 ns
6518±5 ns
64000 ns
300±10 mV
300±10 mV
700 mV
700 mV
650±20 mV
R-Y (PR)
B-Y (PB)
3.375MHz
2000±10 ns
3333±5 ns
32000±5 ns
100, 0, 100, 0 Color bar
Reference of Y/C timing
Reference of Y/C timing

Fig. 4-2(b) Waveform of CTCM Signal (PAL)

4-3. Frequency Allocations

The luminance and compressed CTCM chrominance signal are separately modulated by FM signals as shown in Figure 4–3 (a) or (b) and they are recorded on the tape.
The FM audio signal is also modulated by FM with CTCM chrominance signce as shown in Figure 4–3 (a) or (b).

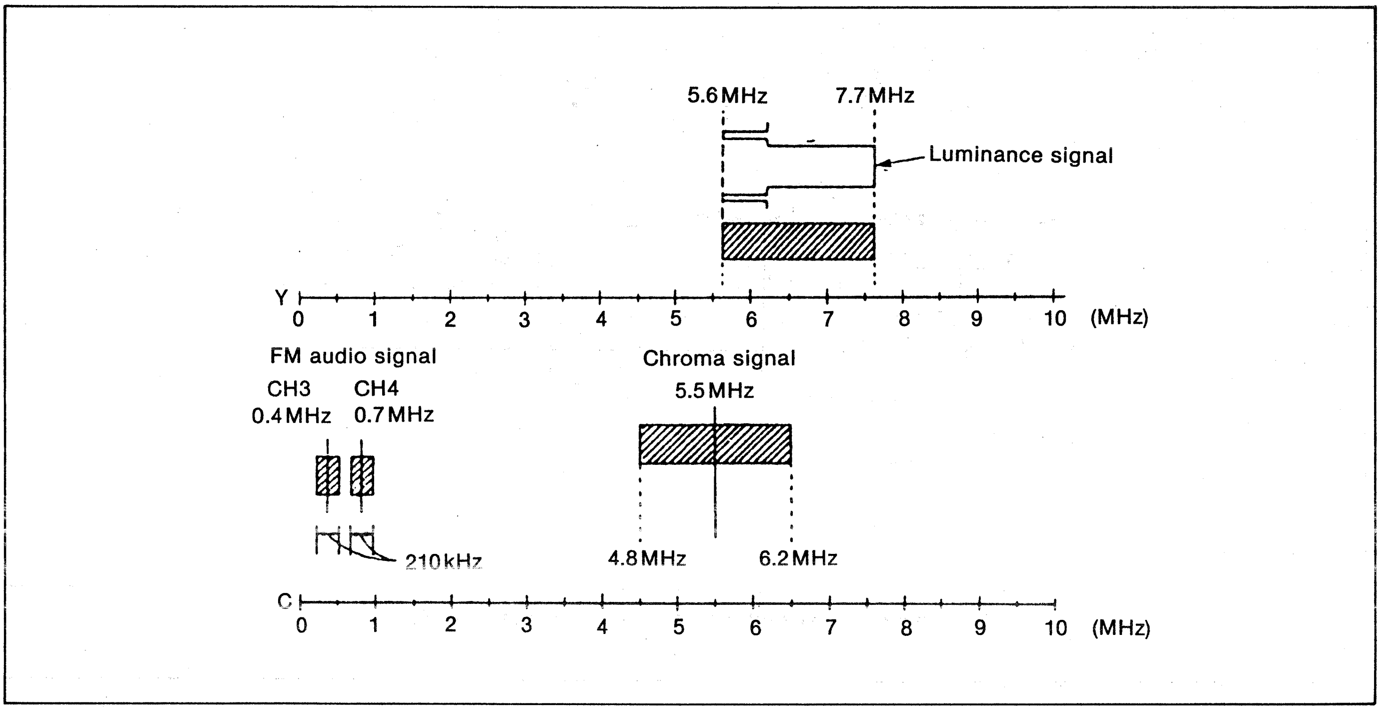
5.6MHz
7.7MHz
Luminance signal
Y
0 1 2 3 4 5 6 7 8 9 10 (MHz)
FM audio signal
CH3 CH4
0.4MHz 0.7MHz
210kHz
Chroma signal
5.5MHz
4.8MHz
6.2MHz
C
0 1 2 3 4 5 6 7 8 9 10 (MHz)

Fig. 4–3(a) Frequency Allocation (NTSC)

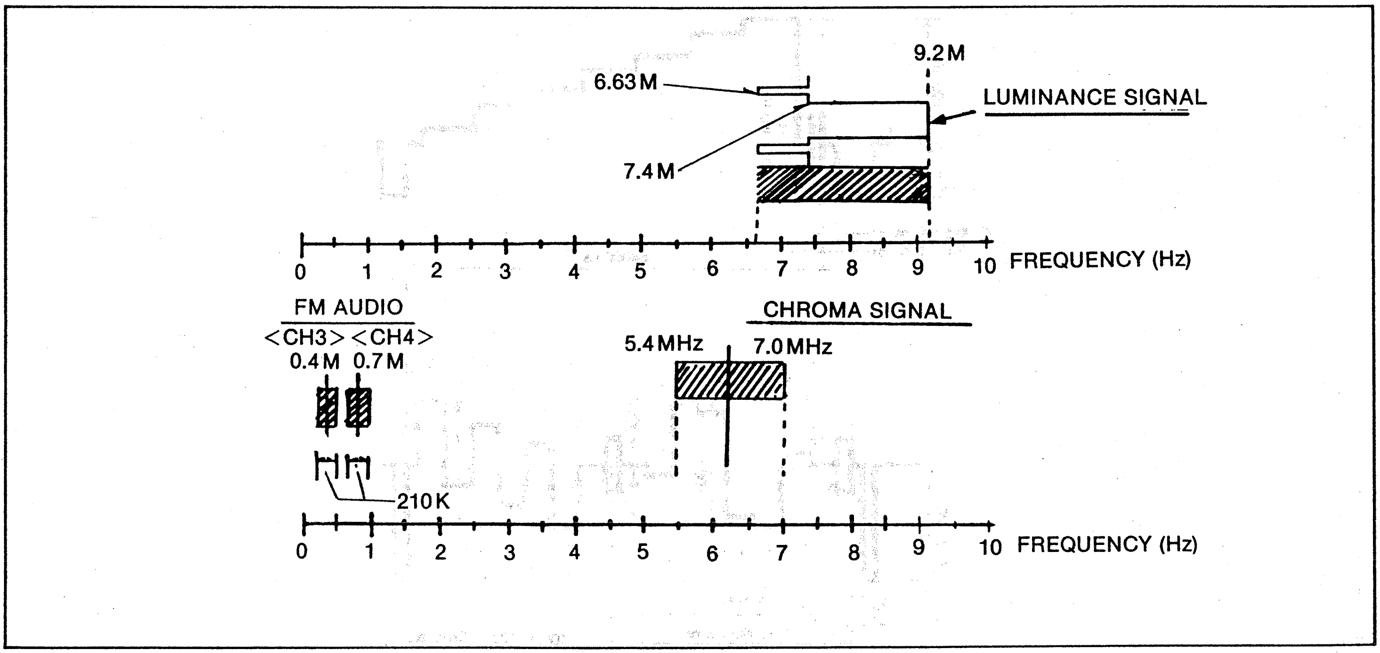
9.2M
6.63M
7.4M
LUMINANCE SIGNAL
0 1 2 3 4 5 6 7 8 9 10 FREQUENCY (Hz)
FM AUDIO
<CH3> <CH4>
0.4M 0.7M
210K
CHROMA SIGNAL
5.4MHz
7.0MHz
0 1 2 3 4 5 6 7 8 9 10 FREQUENCY (Hz)

Fig. 4–3(b) Frequency Allocation (PAL)

4-4. Time base corrector (TBC)

Figure 4–4 is the block diagram of the TBC. The TBC consists of A/D, memory, W–PLL, D–A, encoder and SYNC GEN circuit.

1) AU–65, AU–63 and AU–62 (NTSC & PAL)
   The TBC has a +/– 16H window. AU–63's TBC is able to output noiseless slow motion since AU–63 has had a auto tracking playback head at speeds of x(–1) to x(+2).
   In the A/D block, analog Y and CTCM signals are converted to 8 bit digital signals and are supplied to the memory block.

2) AU–665 (NTSC)
   The TBC has a field memory and is able to output noiseless slow motion since auto tracking playback head at speeds of x(–1) to x(+2). The filed memory takes effective many line's drop out compensation.
   In addition, when the VISC signal is added to the video signal, the phase of the TBC clock is controlled to match the encoder's sub carrier to the VISC signal.
   In the A/D block, analog Y signal is converted 9 bit digital signal and CTCM signal is converted 8 bit digital signal.

The memory block performs video signal processing such as timing adjustments, jitter correction, drop–out correction, interpolation, and averaging. Regarding chrominance signals in particular, level differences are often generated line by line due to clampling errors in time axis compression or level alteration during recording. This may cause line crawling, subcarrier leak or vertical stripe beats in the pictures reproduced. To prevent these problems, it is necessary to perform line averaging of playback Pr and Pb signals. At the same time, field reproduction takes place during auto tracking playback, and line interpolation is performed. Line averaging can be user selected.

In the D/A–ENCODER block, the time axis corrected and expanded PCM signal converted to analog. The color difference signal is subjected to balanced modulation. The Y signal, modulated color signal, and synchronizing signal are added, and this signal is output as a composite video signal.

The W–PLL block performance determines the accuracy concerning residual jitter, vertical sync, and Y/C timing delays between Y, Pb, Pr.

The write clock is generated in one of two ways depending on the presence or absence of azimuth skew error. Without azimuth skew, the write clock is synchronized with playback Y. Y and C are timed to each other via APC and AFC loops to a 54MHz master clock and added H and pilot burst signals. For the C signal, a burst is added to the Pb and Pr components before time compression for accurate reconstruction during playback.

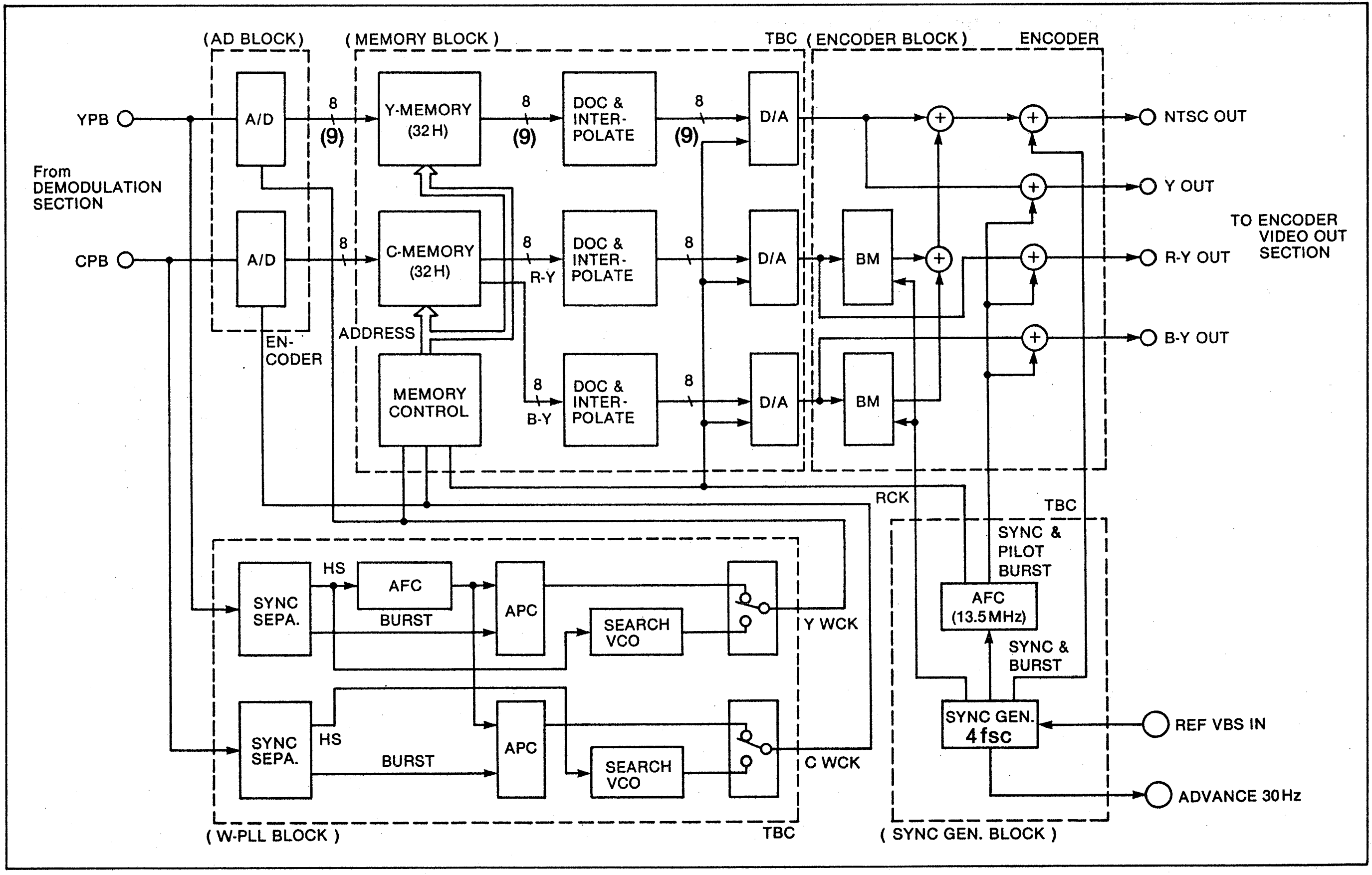
(AD BLOCK)
(MEMORY BLOCK)
TBC
(ENCODER BLOCK)
ENCODER
YPB
CPB
From DEMODULATION SECTION
A/D
A/D
8
(9)
Y-MEMORY (32H)
C-MEMORY (32H)
DOC & INTER-POLATE
DOC & INTER-POLATE
DOC & INTER-POLATE
R-Y
B-Y
D/A
D/A
D/A
BM
BM
NTSC OUT
Y OUT
R-Y OUT
B-Y OUT
TO ENCODER VIDEO OUT SECTION
EN-CODER
ADDRESS
MEMORY CONTROL
RCK
TBC
SYNC & PILOT BURST
AFC (13.5MHz)
SYNC & BURST
SYNC GEN. 4fsc
REF VBS IN
ADVANCE 30Hz
HS
AFC
BURST
SYNC SEPA.
APC
SEARCH VCO
Y WCK
SYNC SEPA.
HS
BURST
APC
SEARCH VCO
C WCK
(W-PLL BLOCK)
TBC
(SYNC GEN. BLOCK)

Fig. 4–4 TBC

When azimuth skew exists, the write clock is regenerated by the search VCO and instantaneously phase-locked with each horizontal synchronizing pulse of the Y and C signals.

In addition, this block performs vertical synchronizing and interpolation during auto tracking playback.

In the SYNC GENE block, with an external reference video signal applied, the TBC read clock is synchronized with this reference. Various synchronizing signals, and servo standard 30 Hz signals corresponding to the changeover of R/P and PLAY heads and of REC/PLAYBACK modes are produced.

5. EDITING SYSTEM

The M II Format VTR has been developed as a broadcast VTR with various editing functions, such as video/audio signal insert editing, assemble editing, audio split editing, preview, and review.

Automatic editing can also be performed by an editing system consisting of a player, a recorder and an editing controller (AU–A65 and AG–A800). The control unit is furnished with 9–pin serial interface (RS–422 standard. And SMPTE protocol) and 50–pin parallel interface connectors can be available as a option (AU–MK25). This MII VTR series is equipped with a high–precision CTL reading circuit. When playing or editing with high–speed search, slow, hog/shuttle, etc., however the system still needs the SMPTE Time Code for highly accurate editing.
For this purpose, the Time Code generator/reader (AU–F65) is optionally available. The AU–F65 is essential to give sophisticated editing tasks.

MAINTENANCE & MECHANICAL ADJUSTMENTS

This section covers the disassembly method, maintenance procedures, and mechanical adjustment procedures.

REGULAR MAINTENANCE

The MII-VTR is a complex piece of equipment. It contains many posts, rollers and heads etc. Which may wear with pro-longed use. Dust and dirt will also affect the operation of the machine. It is very important that reqular preventive maintenance (PM) is carried out according to the maintenance chart. This will ensure reliablility, and the machine's specification.

Preventive maintenance should also be performed after any repairs are carried out on the equipment.

CONTENTS

AU-665/65/63/62 MAINTENANCE PARTS LOCATION 3-1
MAINTENANCE CHART 3-2
MAINTENANCE HOURS 3-3
SERVICING FIXTURES & TOOLS 3-4
OPTIONAL TOOLS 3-6
PURPOSE OF MAINTENANCE TOOLS FOR STUDIO VTR 3-7
1. DISASSEMBLY METHOD 3-8
3. MAJOR MECHANISM PARTS REPLACEMENT PROCEDURES 3-9
3-1. GENERAL 3-9
3-2. UPPER DRUM REPLACEMENT 3-9
3-3. DRUM UNIT REPLACEMENT AND ADJUSTMENT 3-14
3-4. CLEANER ROLLER REPLACEMENT AND ADJUSTMENT 3-16
3-5. PINCH ROLLER ARM UNIT REPLACEMENT 3-17
3-6. LOADING MOTOR BELT REPLACEMENT 3-17
3-7. FRONT LOADING MOTOR BELT REPLACEMENT 3-18
3-8. TENSION UNIT REPLACEMENT AND ADJUSTMENT 3-18
3-9. REEL STAND UNIT REPLACEMENT AND ADJUSTMENT 3-23
3-10. A/C HEAD REPLACEMENT 3-24
3-11. FULL ERASE HEAD REPLACEMENT AND ADJUSTMENT 3-32
3-12. CAPSTAN HOUSING UNIT REPLACEMENT AND ADJUSTMENT 3-33
3-13. PINCH ROLLER SOLENOID REPLACEMENT AND ADJUSTMENT ... 3-34
3-14. PINCH PRESS LEVER REPLACEMENT AND ADJUSTMENT 3-35
3-15. TIMER ROLLER REPLACEMENT AND ADJUSTMENT 3-35
3-16. POST ROLLER UNIT REPLACEMENT AND AND ADJUSTMENT 3-37
3-17. IP BASE UNIT (with P10 POST) REPLACEMENT AND ADJUSTMENT ... 3-43
3-18. SUB LOADING SW REPLACEMENT AND ADJUSTMENT 3-44
3-19. BRAKE UNIT AND BRAKE SOLENOID REPLACEMENT 3-44
3-20. LOADING MOTOR REPLACEMENT 3-45
3-21. SMALL CASSETTE MOTOR REPLACEMENT AND ADJUSTMENT 3-46
3-22. FRONT LOADING MOTOR REPLACEMENT 3-47
3-23. RECORDING INHIBIT MICROSWITCH REPLACEMENT 3-47
3-24. RING ROLLER ADJUSTMENT 3-47
3-25. LOADING COMPLETION DETECT SENSOR POSITION ADJUSTMENT ... 3-47
3-26. UNLOADING COMPLETION DETECT SENSOR POSITION ADJUSTMENT ... 3-48
3-27. POSITION OF P1 POST DRIVE ROD 3-48
3-28. CASSETTE UP AND DOWN SWITCHES ADJUSTMENT 3-48
3-29. FRONT LOADING U. LEAF SWITCH REPLACEMENT AND ADJUSTMENT ... 3-49
3-30. SMALL CASSETTE LEAF SWITCH REPLACEMENT AND ADJUSTMENT ... 3-49
3-31. TURN ROLLER ARM UNIT REPLACEMENT 3-50
3-32. CAM GEAR REPLACEMENT AND ADJUSTMENT 3-51
3-33. CARRIAGE ILLUMINATION LAMP REPLACEMENT 3-52
3-34. FAN MOTOR REPLACEMENT 3-53
3-35. EJECT SWITCH REPLACEMENT 3-53
3-36. POWER SWITCH REPLACEMENT...... 3-54

REGULAR MAINTENANCE

REGULAR MAINTENANCE

The purpose of periodic maintenance is to preserve the reliability of this machine throughout its useful life. The user or service dealer should perform these maintenance procedure regularly to ensure that maximum performance is obtained from the machine.

REGULAR MAINTENANCE IS NECESSARY

The VCR is a complicated piece of equipment. It contains many rollers, heads etc., which become worn as time goes by, causing trouble. Dust and dirt will also impede the proper functioning of the machine. In light of this, it is very important that overall maintenance be done according to the maintenance chart to maintain the functions of the VCR, and to avoid accidental problems. This maintenance should also be performed after any repairs are done on the equipment.

REGULAR MAINTENANCE IS RECOMMENDED

The VCR used for broadcast and professional applications requires particular attention for several reasons. The installation conditions and applications are not always the best. Long use times, or poor environmental conditions may adversely affect the lifespan and performance of the machine. Regular maintenance assures that the purchaser obtains the maximum value for this expenditure.

MAINTENANCE PARTS LOCATION

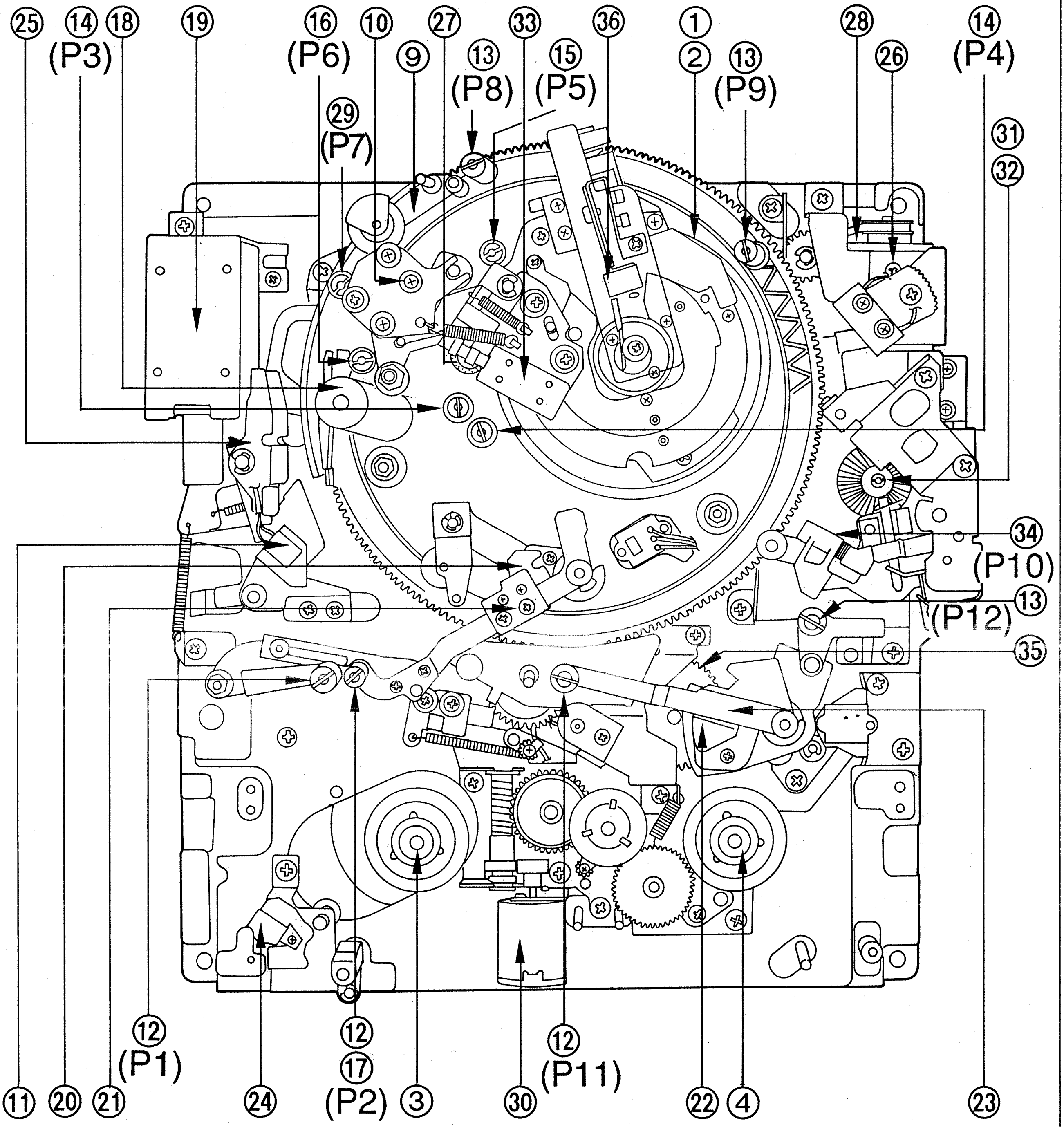

㉕
⑭
(P3)
⑱
⑲
⑯
(P6)
⑩
㉗
㉝
㊱
①
㉘
⑭
(P4)
⑨
⑬
(P8)
⑮
(P5)
②
⑬
(P9)
㉖
㉙
(P7)
㉛
㉜
㉞
(P10)
⑬
(P12)
㉟
⑫
(P1)
⑫
⑰
(P2)
⑫
(P11)
⑪
⑳
㉑
㉔
③
㉚
㉒
④
㉓

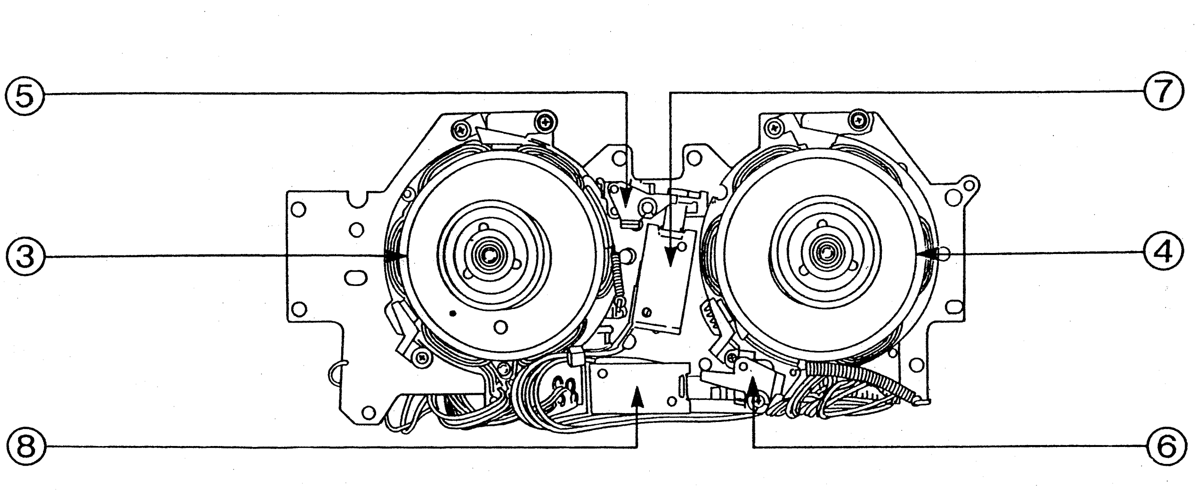

MAINTENANCE CHART

<AU-65/63/62/665>　◎:for M.A.R.C (CART)　●:Replacement　☆:Conf. or Adj.　※:Grease Up　○:Cleaning

Part Name		Part No.	Pcs/ Unit	Location No.	Using Hours									
					1500	3000	4500	6000	7500	9000	10500	12000	15000	24000
Upper Drum (AU-65/62 NTSC)		VEH0475	1	1	Refer to Head Tip Measurment Procedure									
Upper Drum (AU-63 NTSC)		VEH0482	1	1										
Upper Drum (AU-665 NTSC)		VEH0375	1	1										
Upper Drum (AU-65/62 PAL)		VEH0494	1	1										
Upper Drum (AU-63 PAL)		VEH0495	1	1										
Drum Unit (AU-65 NTSC) with Brush Unit		VEG0780	1	2										
Drum Unit (AU-62 NTSC) with Brush Unit		VEG0804	1	2										
Drum Unit (AU-63 NTSC) with Brush Unit		VEG0806	1	2										
Drum Unit (AU-665 NTSC) with Brush Unit		VEG0805	1	2										
Drum Unit (AU-65 PAL) with Brush Unit		VEG0837	1	2										
Drum Unit (AU-62 PAL) with Brush Unit		VEG0838	1	2										
Drum Unit (AU-63 PAL) with Brush Unit		VEG0839	1	2										
S-Reel Stand Unit		VXR0191	1	3				●				●		●
T-Reel Stand Unit		VXR0191	1	4				●				●		●
Supply Brake Unit		VXA4004	1	5				◎				●		●
Take up Brake Unit		VXA4005	1	6				◎				●		●
Supply Brake Solenoid		VSJ0097	1	7				◎				●		●
Take up Brake Solenoid		VSJ0098	1	8				◎				●		●
Pinch Arm Unit		VXL1288	1	9	●	●	●	●	●	●	●	●	●	●
A/C Head Unit (AU-65 NTSC, PAL)		VED0140	1	10				●				●		●
A/C Head Unit (AU-63/62 NTSC, PAL)		VED0142	1	10				●				●		●
A/C Head Unit (AU-665 NTSC)		VED0143	1	10				●				●		●
Full Erase Head (AU-65 NTSC, PAL / AU-665 NTSC)		VBS0024	1	11				●				●		●
Full Erase Head (AU-62/63 NTSC PAL)		VBS0043	1	11				●				●		●
Post Roller with Bearing	P1, P2, P11	VXP0820	3	12								●		●
	P8, P9, P12	VXP0821	3	13										●
	P3, P4	VXP0823	2	14								●		●
	P5	VXP0824	1	15								●		●
	P6	VXP0819	1	16								●		●
P2 Upper Flange		VMS4572	1	17								●		●
Capstan Housing Unit		VXD0110	1	18				●				●		●
Pinch Solenoid		VSJ0069	1	19				●				●		●
S-Stopper Pin Base Unit		VXA2302	1	20		●		●		●		●	●	●
S-Tension Spring Plate		VMC0119	1	21		●		●		●		●	●	●
T-Stopper Pin Base Unit		VXA4013	1	22		●		●		●		●	●	●
T-Tension Arm Unit		VXL1991	1	23		●		●		●		●	●	●
Recording Inhibit Microswitch		EVQWUS002	1	24		◎		●		◎		●	◎	●
Pinch Press Lever Unit		VXL1679	1	25		◎		●		◎		●	◎	●
Leaf Switch (for small cassette)		VSH0026	2	----				◎				●		●
Leaf Switch (for front loading)		VSH0026	1	----		◎		●		◎		●	◎	●
Loading Motor		VRD0030	1	26				◎				●		●
Front Loading Motor		VEM0228	1	----				◎				●		●
Cleaner Roller		VMT0321	1	27	●	●	●	●	●	●	●	●	●	●
Sub Loading Switch		VSM0042	1	----								◎		●
Cassette Up Down Switch		VSM0048	2	----		◎		●		◎		●	◎	●
Loading Motor Belt		VDV0156	1	28	●	●	●	●	●	●	●	●	●	●
Front Loading Motor Belt		VDV0157	1	----	●	●	●	●	●	●	●	●	●	●
Turn Roller Arm Unit (with P7 Post)		VXL1754	1	29				◎				●		●
Small Cassette Motor		VEM0264	1	30								◎		●

<AU-65/63/62/665>　◎:for M.A.R.C (CART)　●:Replacement　☆:Conf. or Adj.　※:Grease Up　○:Cleaning

Part Name	Part No.	Pcs/ Unit	Location No.	Using Hours									
				1500	3000	4500	6000	7500	9000	10500	12000	15000	24000
Timer Roller Unit	VXP1183	1	31				●				●		●
Timer Roller (Bearing)	VDB0778	2	32				●				●		●
Fan Motor	VRF0061	1	----		●		●		●		●	●	●
Eject Switch	VSP0221	1	----				●				●		●
Power Switch (NTSC)	EST15372T	1	----								●		●
Power Switch (PAL)	EST15367S	1	----								●		●
Cleaner Solenoid	VSJ0096	1	33				◎				●		●
IP Base Unit (with P10 Post)	VXR0131	1	34				●				●		●
Cam Gear	VDG0669	1	35					◎				●	
Carriage Illumination Lamp	VLL0019	3	----	●	●	●	●	●	●	●	●	●	●
Gears	-----	----	----		※		※		※		※	※	※
Ring Roller	-----	----	----				○				○		○
Brake Torque	-----	----	----				☆				☆		☆
Tape Tention	-----	----	----		☆		☆		☆		☆	☆	☆
Brush Unit	-----	----	36	○	○	○	○	○	○	○	○	○	○

MAINTENANCE HOURS

When you want to know the replacement time, the HOUR METER function is used.

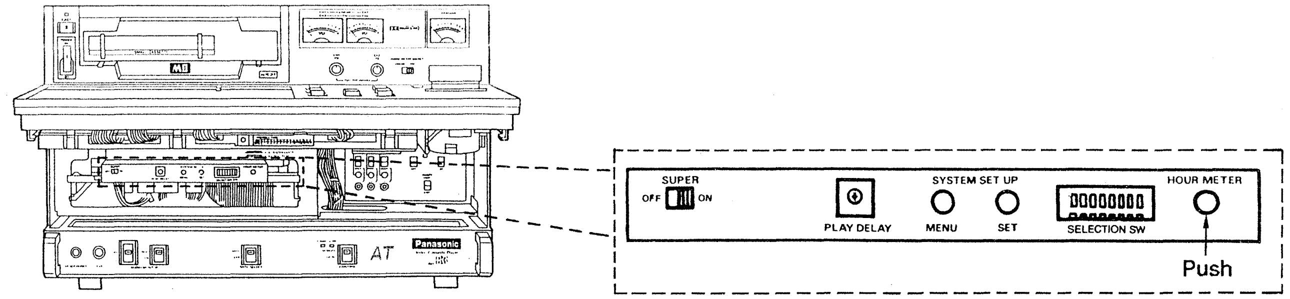

When this button is pushed, the accumulated "total power-on" time and "total drum rotation" time are displayed in 10 hours units as shown below.

SUPER INPOSE

```
HOUR METER

    POWER ON          00350 HOURS

    DRUM ON           00170 HOURS
```

FRONT PANEL

```
LTCR  00 : 00 : 00 00   P00350H   D00170H
EJECT
```

Servicing Fixtures & Tools for Model AU-665/65/63/62 Tool Kit No. VFK0356C

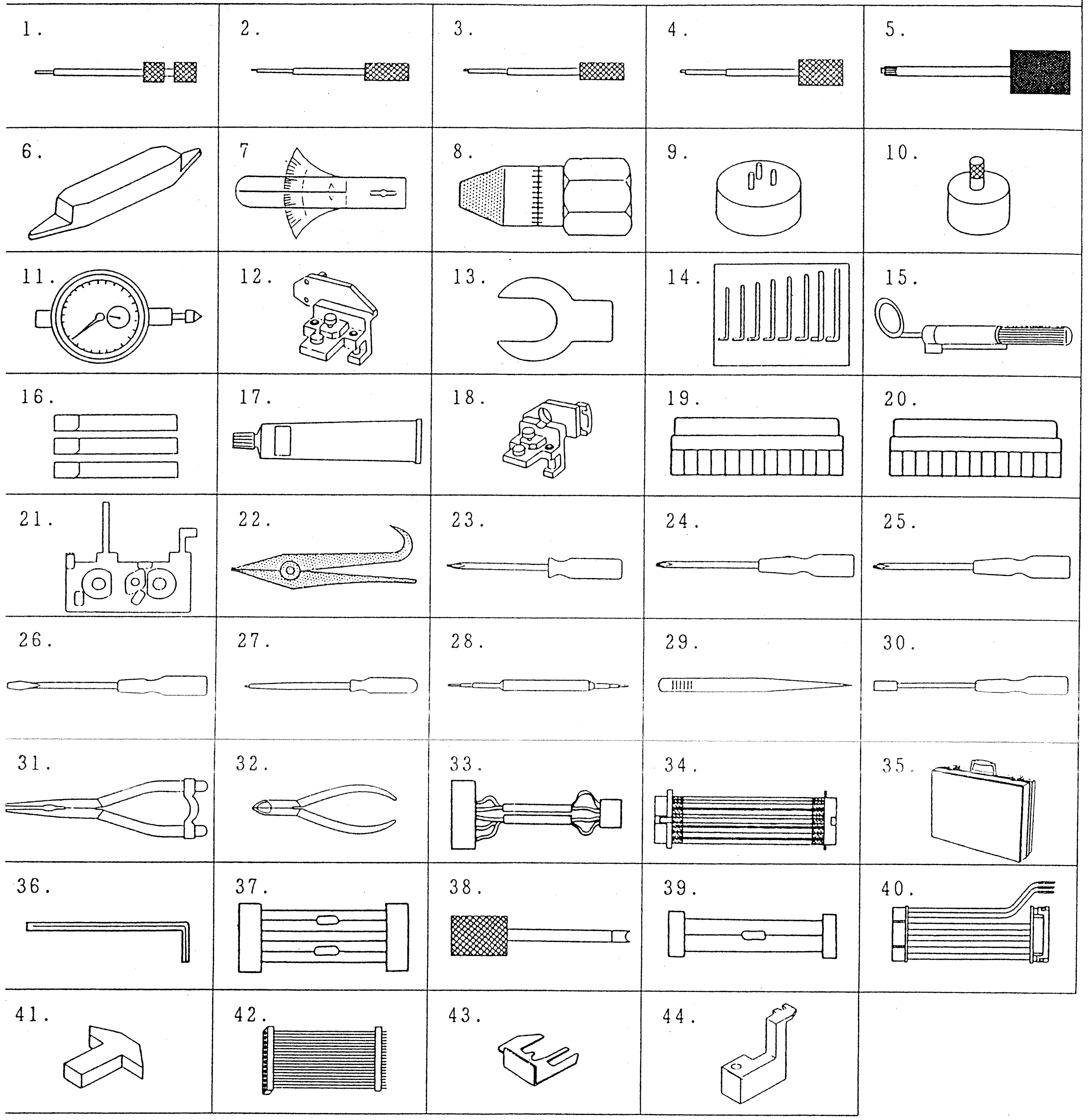

CONTENTS OF MII TOOL KIT

Ref. No.	Part No.	Q'tty	Tool Name	AU-665	AU-65/ 63/62	AU-410 /410S	AU-520 /520S
1	VFK0293	1	Post Driver	v	v	v	v
2	VFK0357	1	Eccentric Driver (1)	v	v	v	v
3	VFK0358	1	Eccentric Driver (2)	v	v		v
4	VFK0359	1	Eccentric Driver (3)	v	v		
5	VFK0446	1	Fine Adj. Driver	v	v	v	v
6	VFK0363	1	Post Height Fixture	v	v		
7	VFK66	1	Tension Gauge	v	v		
8	VFK0133	1	Dial Torque Gauge	v	v	v	v
9	VFK0134	1	Adaptor for VFK0133	v	v	v	v
10	VFK0354	1	Adaptor for VFK0133			v	v
11	VFK0325	1	Dial Gauge	v	v	v	v
12	VFK0287	1	Head Adj. Plate	v	v		
13	VFK0296	1	RT Gap Spacer	v	v	v	v
14	VFK0326	1	Hex Wrench Set	v	v	v	v
15	VFK0343	1	Check Light	v	v	v	v
16	VFK27	1	Head Cleaning Stick	v	v	v	v
17	MOR265	1	Morlyton Grease	v	v	v	v
18	VFK0353A	1	Head Adj. Plate			v	
19	VFK0361	1	Dummy Plug (1) Large Cassette Simulation	v	v		
20	VFK0362	1	Dummy Plug (2) Small Cassette Simulation	v	v		
21	VFK0352	1	Mech Neutral Adj. Plate	v	v		
22	VFK0335	1	Retaining Remover	v	v	v	v
23	VFK0473	1	Philips Driver (Magnet)	v	v	v	v
24	VFK0337	1	Philips Driver (Large)	v	v	v	v
25	VFK0366	1	Philips Driver (Small)	v	v	v	v
26	VFK0367	1	Screw Driver	v	v	v	v
27	VFK0338	1	Trimmer Adj. Driver	v	v	v	v
28	VFK0368	1	Core Adj. Driver	v	v	v	v
29	VFK0369	1	Tweezers	v	v	v	v
30	VFK0370	1	Nut Driver (5.5m/m)	v	v		
31	VFK0371	1	Radio Prier	v	v	v	v
32	VFK0372	1	Cutter Prier	v	v	v	v
33	VFK0364	1	A/C Head Adj. Connector			v	
34	VFK0533	1	Extension Cable				
35	VFK0355A	1	Tool Box Case	v	v	v	v
36	VFK0410	1	Hex Wrench			v	v
37	VFK0386	1	A/R Bias Cur. Connector				v
38	VFK0329	1	Post Driver			v	v
39	VFK0411	1	LTC REC Cur. Connector			v	v
40	VFK0425	1	Syncro Connector				v
41	VFK0438	1	P2 Post Adj. Fixture	v	v		
42	VFK0470	1	Extension Cable Set	v	v	v	v
43	VFK0444	1	A/C Head Adj. Plate				
44	VFK0599	1	Pinch Jig A			v	v

OPTIONAL TOOL

1. VFM7087EAG (NTSC)
Alignment Tape

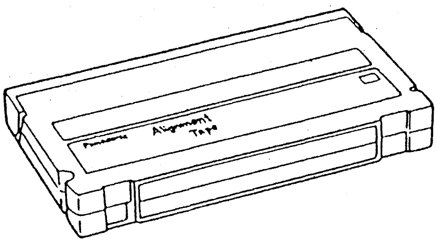
Panasonic
Alignment
Tape

2. VFM7180EG (PAL)
Alignment Tape

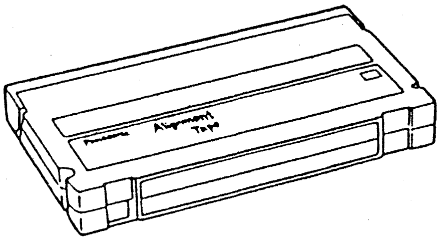
Panasonic
Alignment
Tape

3. VFM0132
Back Tension Meter

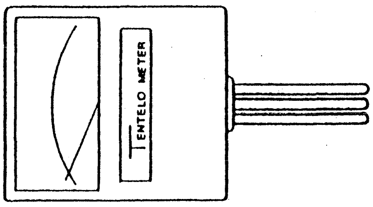
TENTELO METER

4. VFK0601
B Extension Board

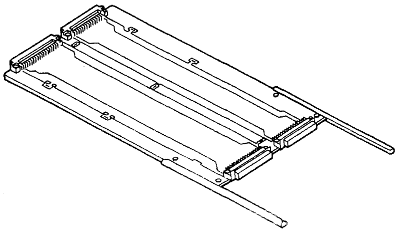

5. VFK0676
Nut Driver (7m/m)

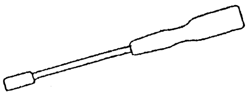

Ref. No.	Part No.	Q'tty	Tool Name	AU-665	AU-65/63/62	AU-410/410S	AU-520/520S
1	VFM7087EAG	1	Alignment Tape (NTSC)	v	v		v
2	VFM7180EG	1	Alignment Tape (PAL)	v	v		v
3	VFK0132	1	Back Tension Meter	v	v	v	v
4	VFK0601	1	B Extension Board		v		
5	VFK0676	1	Nut Driver (7m/m)	v	v		

PURPOSE OF MAINTENANCE TOOL for STUDIO VTR

Part No.	Purpose
VFK0293	Post Height Adjustment Timer Roller Height Adjustment
VFK0357	Tape Tension Adjustment
VFK0358	A/C Head Horizontal Position Adjustment Tape Tension Adjustment Timer Roller Position Adjustment Pinch Roller Solenoid Adjustment P1 Post Drive Rod Adjustment
VFK0359	Magnet Sensor Base Position Adjustment
VFK0446	Leaf Switch Adjustment Loading Completion Detect Photo Sensor Position Adjustment Unloading Completion Detect Photo Sensor Position Adjustment Cassette Detect Sensor Adjustment
VFK0363	Post Height Adjustment
VFK66	Pinch Roller Solenoid Adjustment
VFK0133, VFK0134	Brake Torque Confirmation
VFK0325, VFK0287	Upper Drum Adjustment
VFK0296	Slip Ring Clearance Adjustment
VFK0326	A/C Head Adjustment Slip Ring Clearance Adjustment P10 Post Adjustment
VFK0343	Tape Interchangeability Adjustment
VFK27	Video Head Tip Cleaning
VFK0361	Large Cassette Simulation
VFK0362	Small Cassette Simuilation
VFK0352	Tape Interchangeability Adjustment Tape Tension Adjustment
VFK0132	Tape Tension Adjustment

1. DISASSEMBLY METHOD

TOP PANEL

1. Remove power cord from unit before disassembly.
2. Remove the 4 screws and remove the top panels.

HALF LOADING FOR A/C HEAD CLEANING

To clean the A/C Head (move pinch assy a side), press the JOG or SHTL buttons. To return to unload position, press the EJECT button.

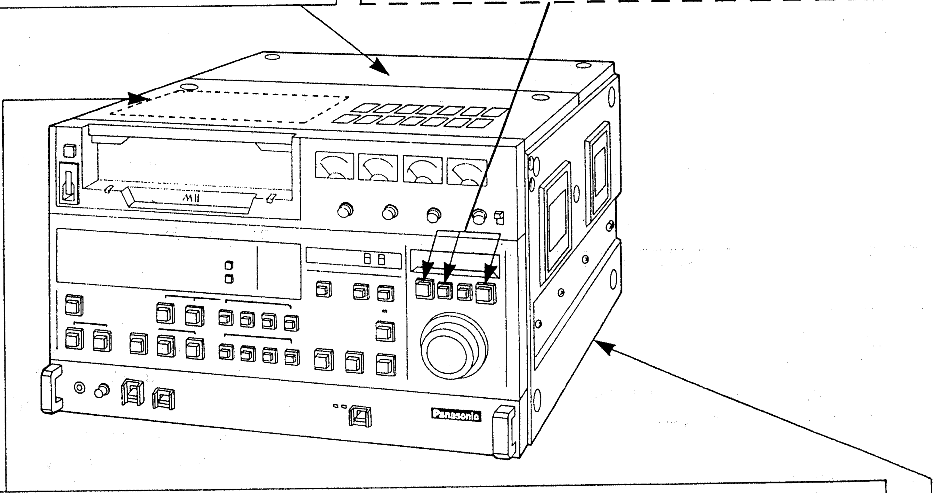

MII
Panasonic

FRONT LOADING (CARRIAGE) UNIT

1. Remove the 4 screws (F) and loosen the 2 silver screws (G) then pull the front panel forward.
2. Remove the 4 screws (B) and remove the carriage fix plate.
3. Remove the 2 screws (C) on the chassis as shown in figure.
4. Turn the front loading motor by hand until front loading is completed. (To expose screws "D")
5. Remove the 2 screws (D) and connector (E).
6. Turn the front loading motor by hand until eject condition is completed and then carefully lift the cassette compartment (CARRIAGE) unit up and remove.

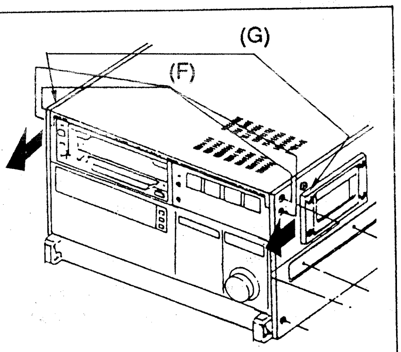

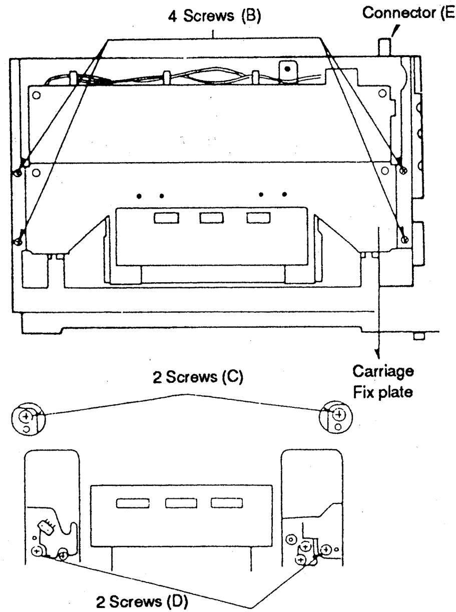

4 Screws (B)
Connector (E)
Carriage Fix plate
2 Screws (C)
2 Screws (D)

Completed Loading Position

BOTTOM PANEL

1. Unscrew the 8 screws (A) and remove the bottom panel (B).

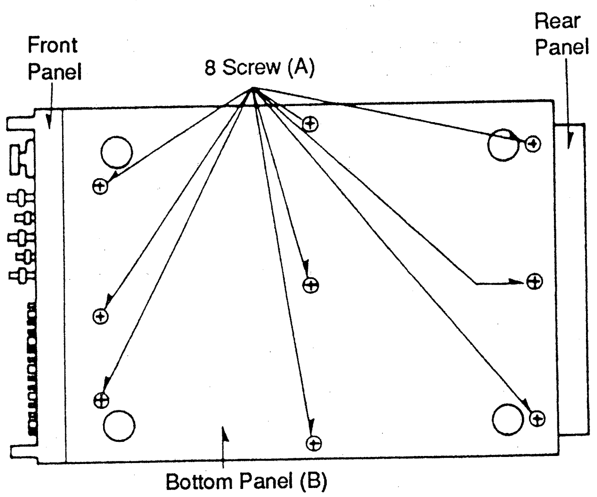

Front Panel
8 Screw (A)
Rear Panel
Bottom Panel (B)

3. MAJOR MECHANISM PARTS REPLACEMENT PROCEDURES

3-1. GENERAL

When mechanical parts are replaced, pay attention to the following notes:

(1) Always turn the power off before replacing any parts.
(2) If any adjustment is necessary after the part is replaced, perform the adjustment after replacement.
(3) Use proper hand tools of fixtures.
(4) Be sure to clean the Parts after replacement.

Also when the mechanical parts are replaced, follow the replacement procedures.

3-2. UPPER DRUM REPLACEMENT

Tools Required:
Head Adjustment Plate (VFK0287)
Dial Gauge (VFK0325)
RT Gap Spacer (VFK0296) for AU-665
Hex Wrench (1.27mm 2mm 2.5mm)

3-2-1. Replacement

Removal

<For AU-65/62>

1. Unscrew the 2 screws (A) and remove the cleaner roller unit as shown in figure 3-2-1.
2. Unscrew the 2 screws (B) and remove the earth brush unit as shown in figure 3-2-1.
3. Unscrew the 2 screws (C) and unsolder 12 lead wires of upper drum unit as shown in figure 3-2-2.
4. Remove the upper drum unit.

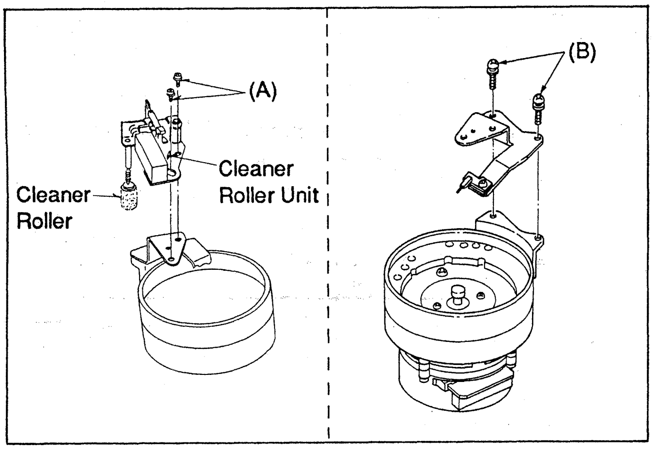

Fig. 3-2-1 Cleaner Roller and Earth Brush Unit

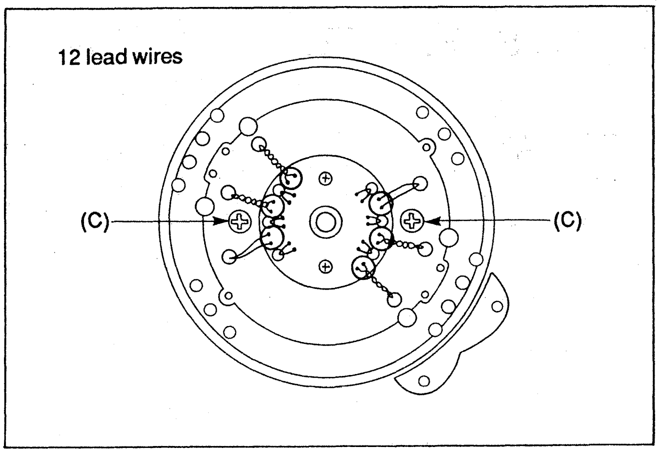

Fig. 3-2-2 Lead Wires of Upper Drum

<For AU-63>

1. Unscrew the screw (A) and remove the brush cover as shown in figure 3-2-3.
2. Unscrew 2 screws (B) and remove the cleaner roller unit as shown in figure 3-2-3.
3. Unscrew the 2 screws (C) and remove the brush unit as shown in figure 3-2-4. (Caution : brushes are easy to bent)
4. Unscrew the 2 screws (D) and unsolder the 2 lead wires of slip ring and then remove the slip ring as shown in figure 3-2-5.
5. Unscrew the 2 screws (E) and unsolder 8 lead wires of upper drum unit as shown in figure 3-2-6.
6. Remove the upper drum unit.

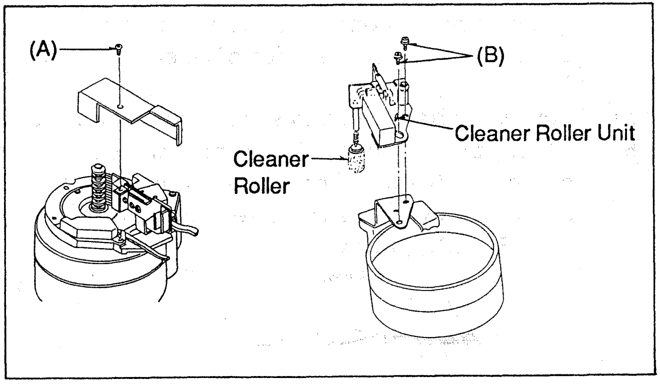

Fig. 3-2-3 Brush Cover and Cleaner Roller

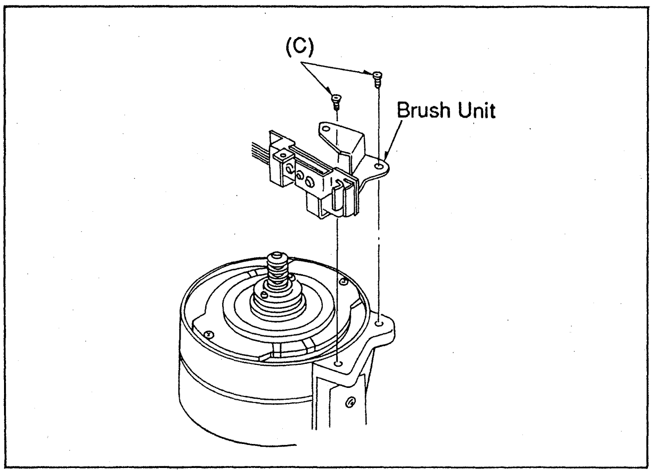
(C)
Brush Unit

Fig. 3-2-4 Brush Unit

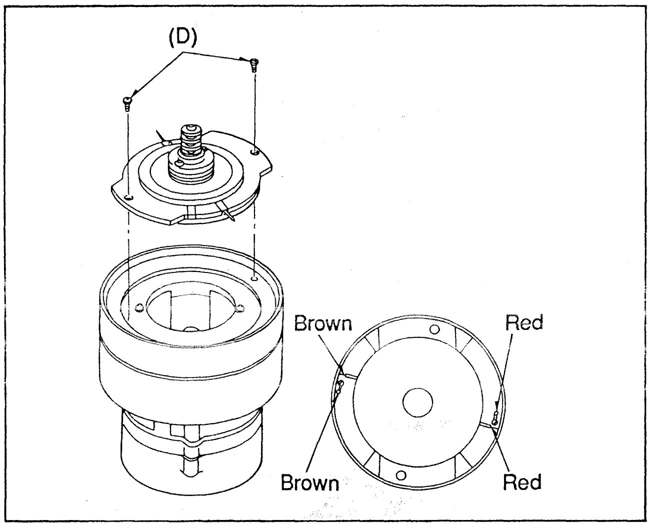
(D)
Brown
Red
Brown
Red

Fig. 3-2-5 Slip Ring Removal

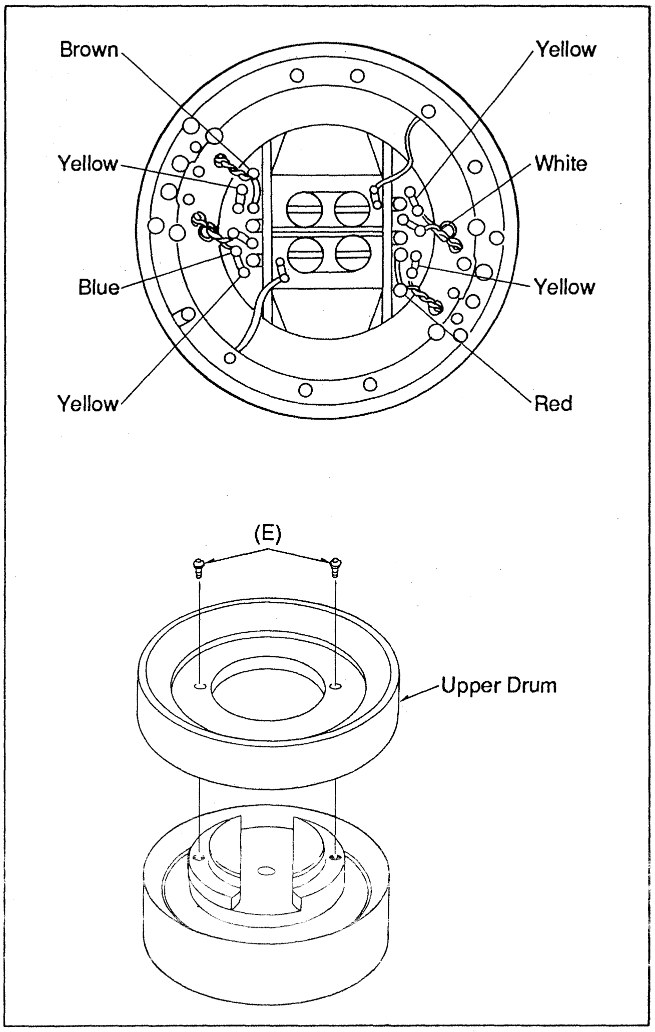
Brown
Yellow
Yellow
White
Blue
Yellow
Yellow
Red
(E)
Upper Drum

Fig. 3-2-6 Upper Drum Removal

<For AU-665>

1. Unscrew screw (A) and remove the brush cover as shown in figure 3-2-7.
2. Unscrew the 2 screws (B) and remove the cleaner roller unit as shown in figure 3-2-7.
3. Unscrew the 2 screws (C) and remove the brush unit as shown in figure 3-2-8. (Caution : brushes are easily bent)
4. Unscrew the 2 screws (D) and remove the rotary transformer arm unit as shown in figure 3-2-9.
5. Unscrew the 2 screws (E) and unsolder 14 lead wires of slip ring and then remove the slip ring as shown in figure 3-2-10.
6. Unscrew the 2 screws (F) and unsolder 8 lead wires of upper drum unit as shown in figure 3-2-11.
7. Remove the upper drum unit.

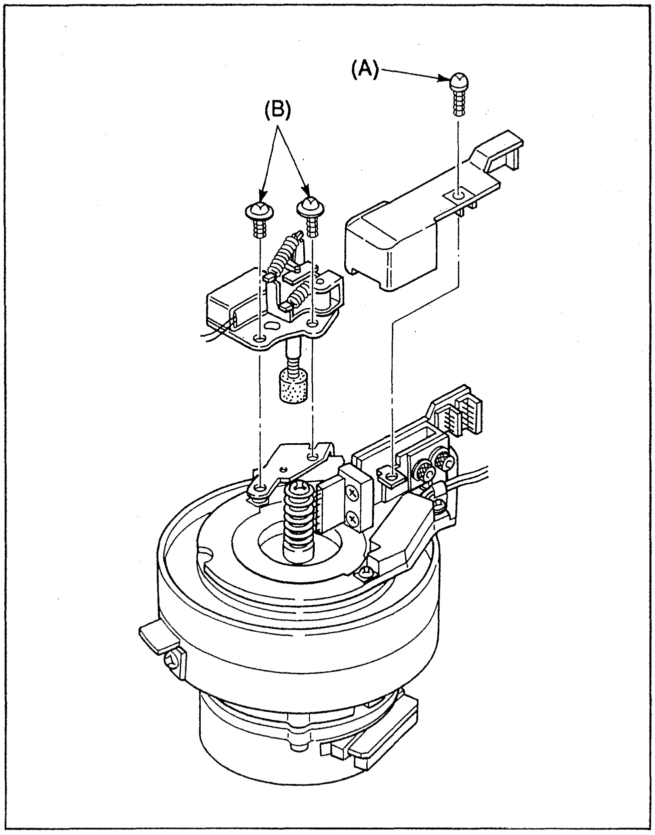

Fig. 3-2-7 Brush Cover and Cleaner Roller

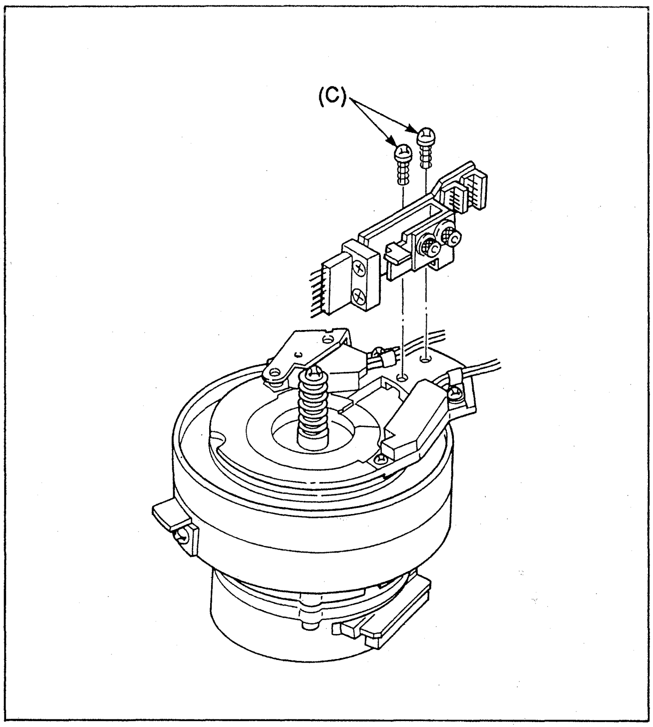

Fig. 3-2-8 Brush Unit

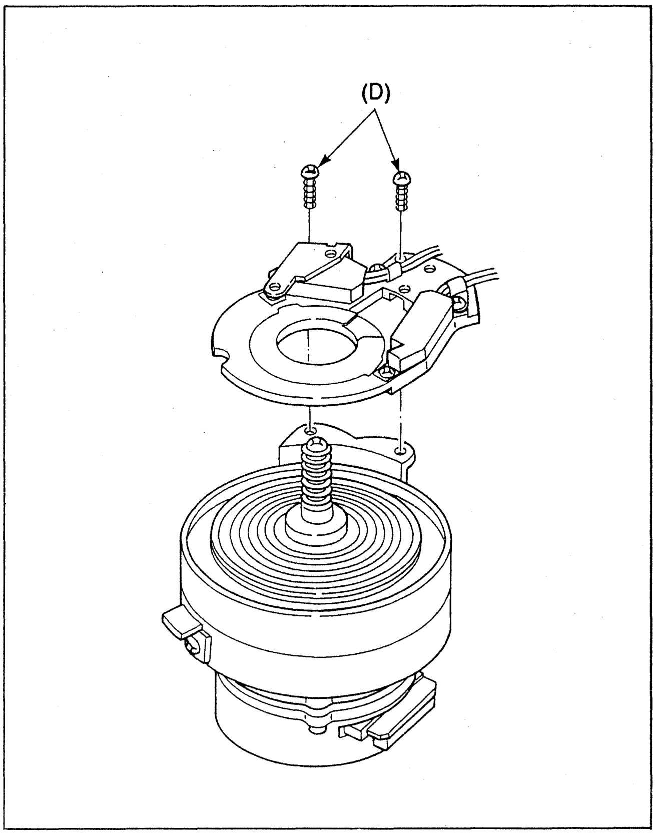

Fig. 3-2-9 Rotary Transformer

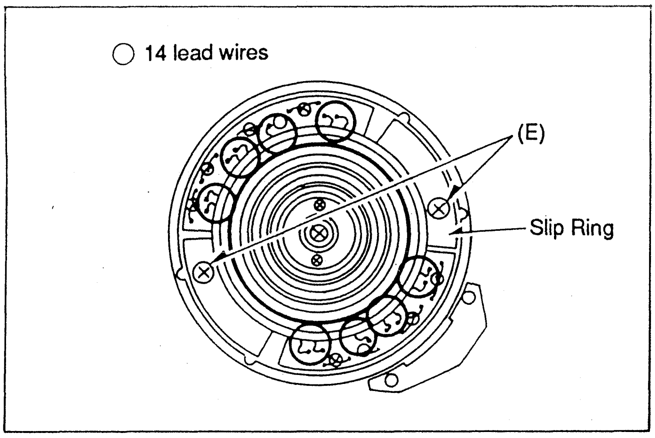
○ 14 lead wires
(E)
Slip Ring

Fig. 3-2-10 Slip Ring

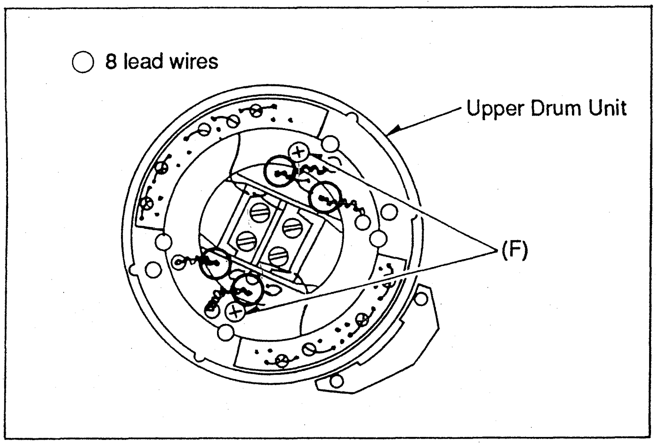
○ 8 lead wires
Upper Drum Unit
(F)

Fig. 3-2-11 Lead Wires of Upper Drum

3-2-2. Installation

1. Before install the new upper drum, clean these areas using head cleaning stick (VFK27) or soft cloth as shown in figure 3-2-12.

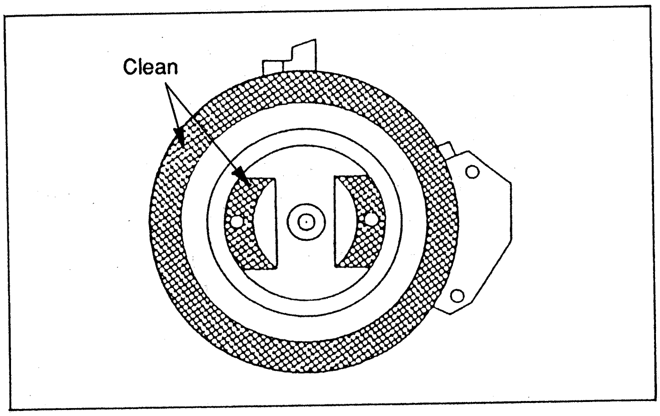

Fig. 3-2-12 Cleaning Part

2. Install the new upper drum so that the wire colors match, and loosely tighten the 2 screws for upper drum unit.
3. Install the head adjustment plate in place of the rotary transformer with attached 2 screws.
4. Mount the dial gauge with screw (A) (figure 3-2-13) so that the pick up of the dial gauge touches the upper part of the rotating drum.
5. Adjust the screw (B) of the head adjusting plate so that the pick up touches the drum and increases 20 to 80um in indication.

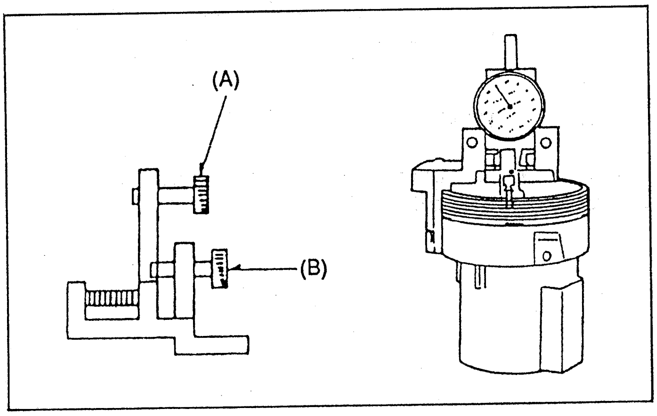

Fig. 3-2-13 Dial Gauge

6. Rotate the outer ring of the dial gauge to set the meter indication to zero. Rotate the upper drum slowly by hand. If the upper drum is not concentric with its axis of rotation, the meter will swing back and forth, indicating the amount of error. The maximum allowable tolerance is within +/-1.5um.
7. If it is out of specification, adjust the position of the upper drum by tapping lightly with the plastic handle of a screwdriver on the side of the drum opposite from the point of measurement. When the eccentricity is within +/-1.5um, gently tighten the 2 screws for upper drum. Check eccentricity to make sure it is within specification. If it is out, repeat this procedure.

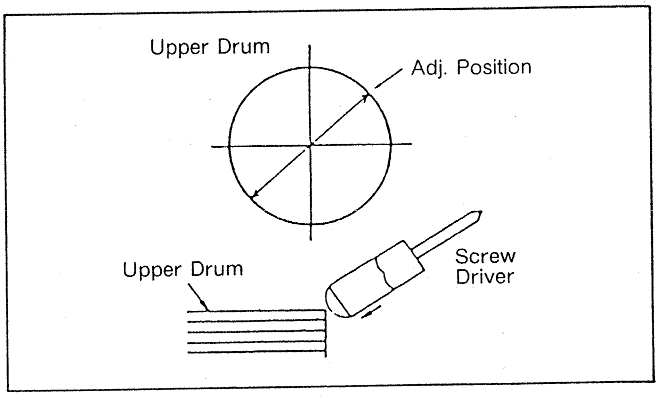

Fig. 3-2-14 Upper Drum Adj.

8. Tighten the 2 screws of upper drum securely and check eccentricity again. If it is within +/-1.5um, remove the head adjustment plate.
9. Solder the lead wires of the upper drum to their matching colors.
10. Install the FE brush unit and cleaner roller. (for AU-65/62)
11. Install the slip ring unit and tighten the 2 screws. (for AU-63/665)
12. Solder the lead wires of the slip ring. (for AU-63/665)

Procedures 13, 14 are for AU-665 only.

13. Set the RT gap spacer on the lower part of the rotary transformer and install the upper RT unit, with the 2 screws. (Fig. 3-2-15)
14. To assure proper spacing of the two halves of the rotary transformer, the 3 hex screws (A) are adjusted (clockwise) so that the upper half of the rotary transformer touches the spacer at all three points. Hex screws (B) should be loose during this procedure.
    Loosen each screw (A) counterclockwise slightly until the spacer can be pulled free, then keep this gap and tighten the 3 hex screws (B) evenly (Do not tighten up in sequence). Check to see that the upper drum turns freely (no sound) even if using the RT gap spacer. (Fig. 3-2-16)

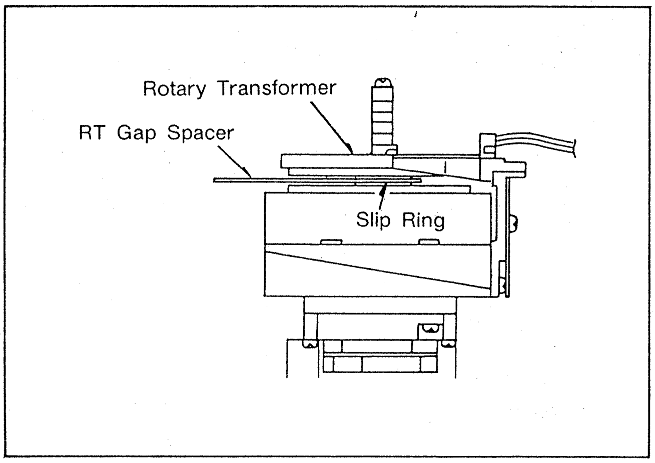
Rotary Transformer
RT Gap Spacer
Slip Ring

Fig. 3-2-15 RT Gap Spacer

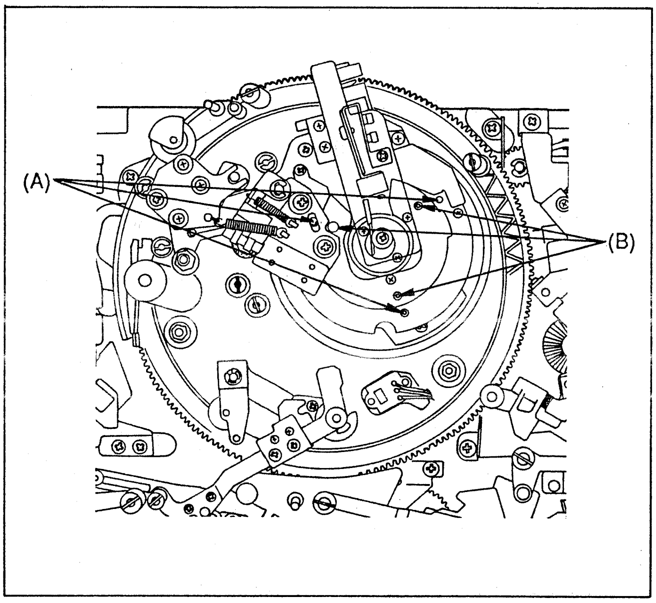

Fig. 3-2-16 Rotary Transformer

Following procedures (15 to 17) are AU-63/665 only.

15. Install the brush unit and tighten the 2 screws for brush unit.
16. Normally brush tension need not be adjusted unless new brushes are installed. However, to check the brush adjustment, first of all, confirm that the brush stopper portion (bending portion of the metal plate) is just touches the RT arm cutting portion as shown in figure 3-2-17. (AU-665 only) And loosen the screw (I) until they are straight and still touching the slip ring assembly, then tighten the screw (I) 1 and 1/2 turns clockwise.
17. Install the brush cover and cleaner roller unit and then tighten the screws.

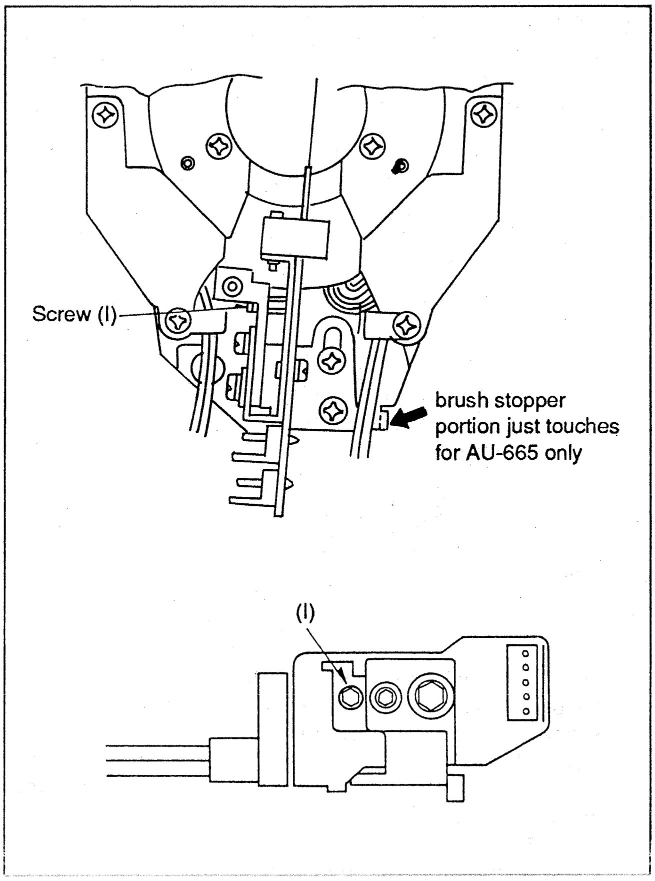
Screw (I)
brush stopper portion just touches for AU-665 only
(I)

Fig. 3-2-17 Brush Unit Installation

Note:

When the upper drum is replaced, run the cleaning cassette (AU-MPSCL) for 60 second to polish the head surface.

3-2-3. ADJUSTMENT

After the replacement, perform the following electrical adjustments.

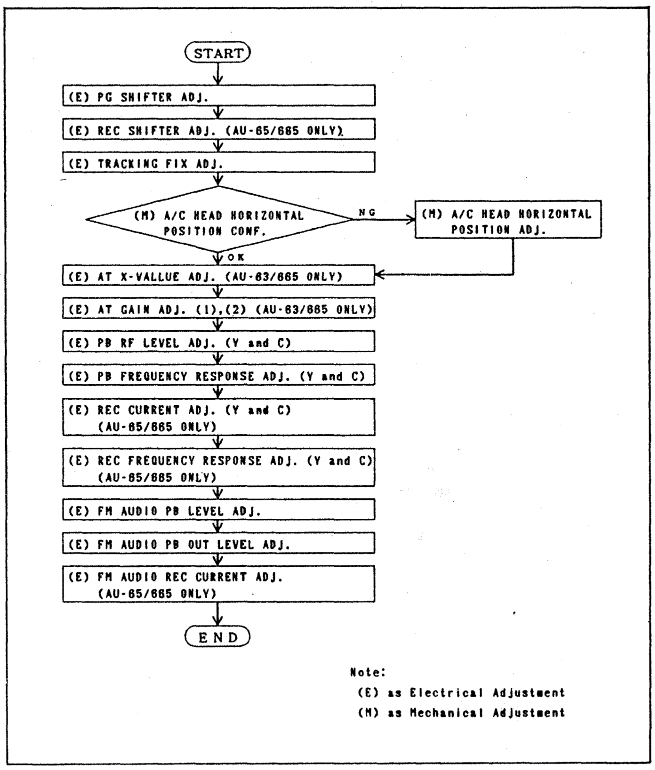
START
(E) PG SHIFTER ADJ.
(E) REC SHIFTER ADJ. (AU-65/665 ONLY)
(E) TRACKING FIX ADJ.
(M) A/C HEAD HORIZONTAL POSITION CONF.
NG
(M) A/C HEAD HORIZONTAL POSITION ADJ.
OK
(E) AT X-VALLUE ADJ. (AU-63/665 ONLY)
(E) AT GAIN ADJ. (1),(2) (AU-63/665 ONLY)
(E) PB RF LEVEL ADJ. (Y and C)
(E) PB FREQUENCY RESPONSE ADJ. (Y and C)
(E) REC CURRENT ADJ. (Y and C) (AU-65/665 ONLY)
(E) REC FREQUENCY RESPONSE ADJ. (Y and C) (AU-65/665 ONLY)
(E) FM AUDIO PB LEVEL ADJ.
(E) FM AUDIO PB OUT LEVEL ADJ.
(E) FM AUDIO REC CURRENT ADJ. (AU-65/665 ONLY)
END
Note:
(E) as Electrical Adjustment
(M) as Mechanical Adjustment

Note:

After adjustment of Upper Drum, confirm that the RF envelope is flat using the alignment tape linearity portion.

3-3. DRUM UNIT REPLACEMENT AND ADJUSTMENT

3-3-1. Removal

1. Disconnect the connector (A).(for AU-63 only) Disconnect the 4 connectors (A) (B) (C) and (D) as shown in figure 3-3-1. (for AU-665 only)

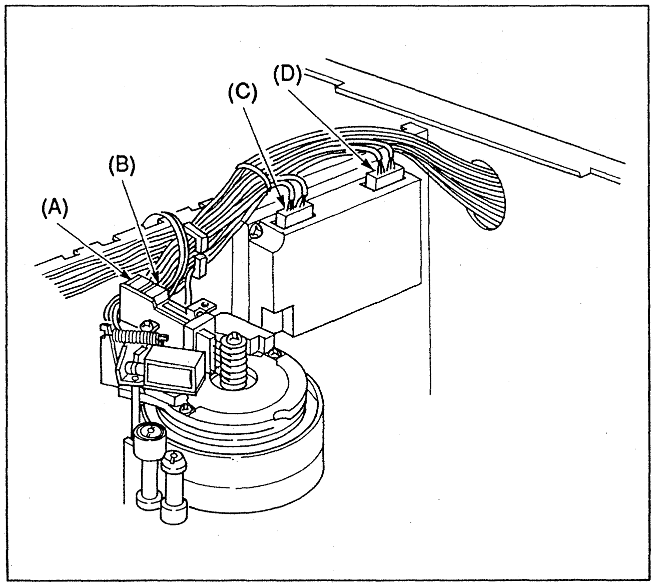

Fig. 3-3-1 Drum's Connectors

2. Unscrew the 2 screws to removing the cleaner unit as shown in figure 3-3-2.
3. Remove the bottom plate.
4. Remove the SYSCON and TCG/TCR P.C.Board (option for AU-65/63/62) as shown in figure 3-3-3.
5. Disconnect the 5 connectors (E), (F), (G), (H), and (I) from the bottom side as shown in figure 3-3-4.
6. Remove the 3 screws to removing the Drum Unit from tape transport side as shown in figure 3-3-5.

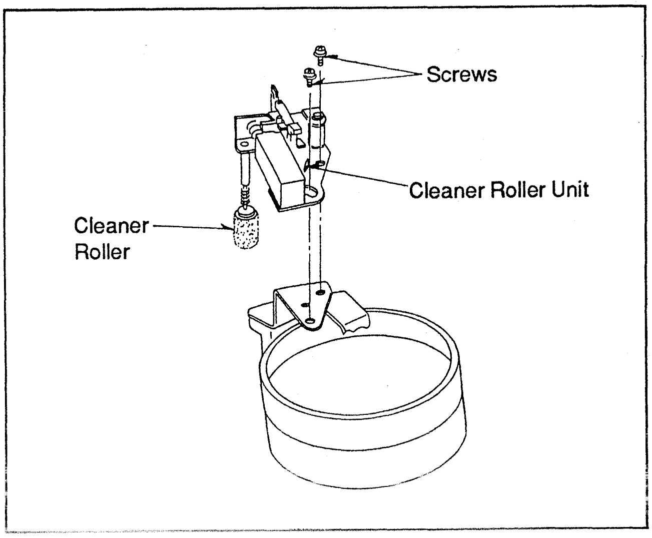
Screws
Cleaner Roller Unit
Cleaner Roller

Fig. 3-3-2 Cleaner Roller Removing

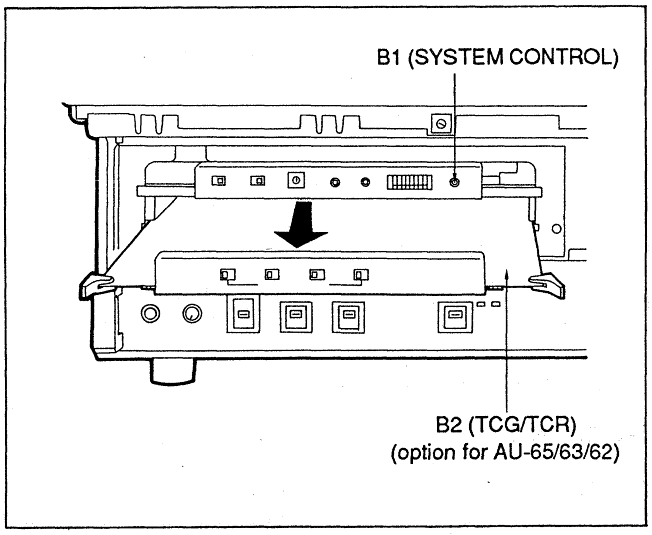
B1 (SYSTEM CONTROL)
B2 (TCG/TCR)
(option for AU-65/63/62)

Fig. 3-3-3 B1 and B2 Unit Removal

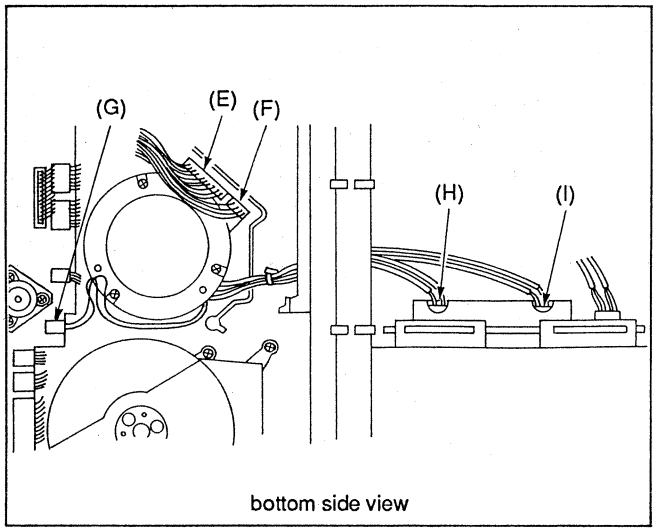

Fig. 3-3-4 Drum's Connector

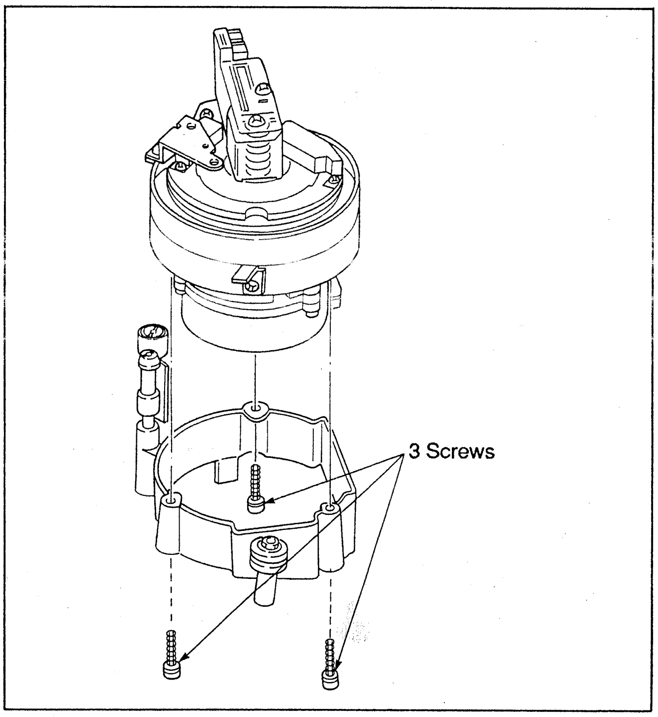

Fig. 3-3-5 Drum Unit Removal

3-3-2. Installation and Confirmation

1. Install new head drum assembly. (Don't touch tape contact surface of drum unit)
2. Tighten the 3 screws evenly. (recommended driver torque --- 8 kg/cm)
3. Reconnect the connectors that were disconnected during the removal.
4. Install the Head Cleaner Unit.
5. Push the solenoid and rotate the drum counterclockwise as shown in figure 3-3-6.
6. Confirm that the projection part (A) is positioned as center of a dent part (B) as shown in figure 3-3-6.

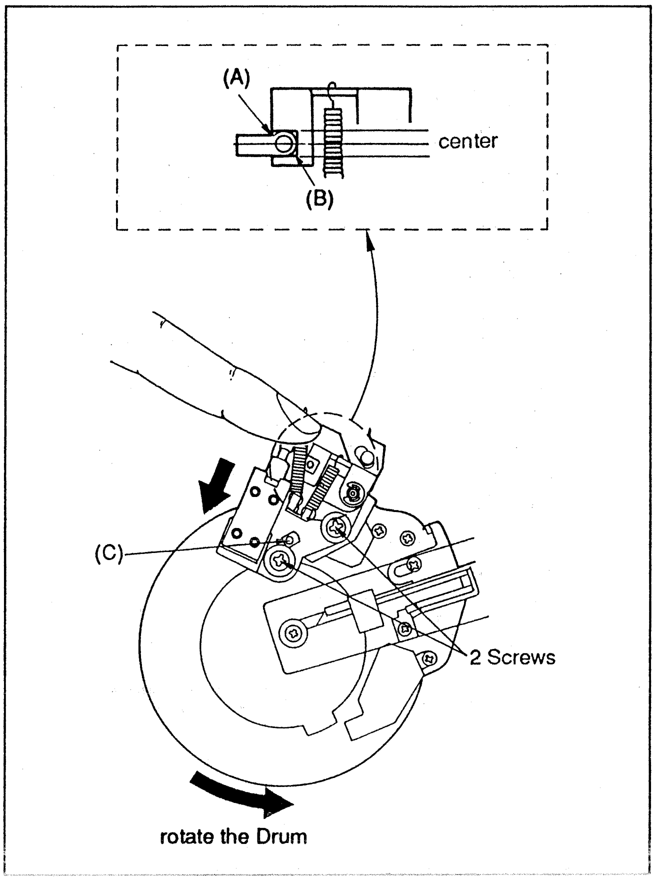

Fig. 3-3-6 Solenoid Position

7. If it is not, loosen the 2 screws and insert the eccentric screw driver into hole (C) and adjust the Cleaner position. (Fig. 3-3-6)
8. Clean the head drum using alcohol. After cleaning using alcohol, wipe the head using dried cloth.
9. Make a recording for a few minutes and playback the portion that was just recorded about 2 second.
10. Press the STOP button and confirm that the top of envelope is stable. (less than 0.2 msec) as shown in figure 3-3-7.
11. If it is not, confirm that the wires from the drum is not pinched between drum and chassis or confirm that the 3 screws are exactly tightened.

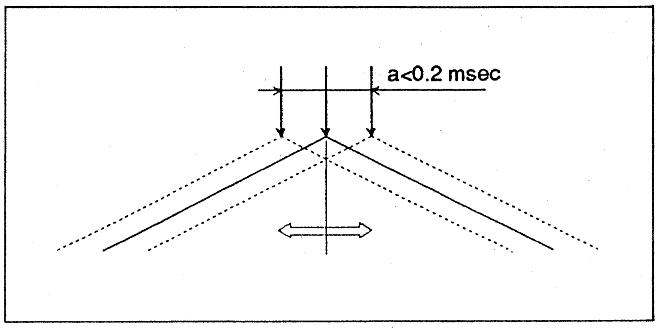

Fig. 3-3-7 Envelope Out

3-3-3. Adjustment

1. After the replacement, perform the following confirmation and adjustment.

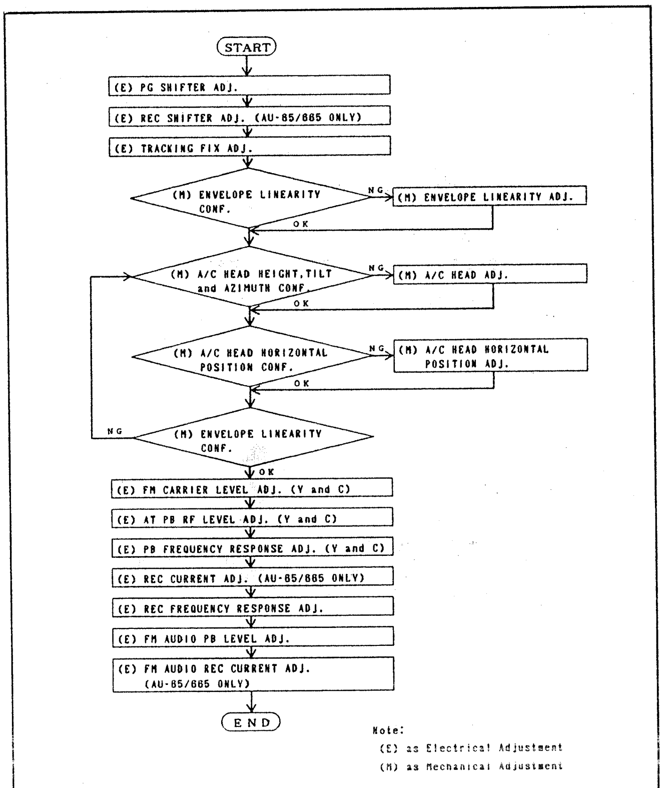
START
(E) PG SHIFTER ADJ.
(E) REC SHIFTER ADJ. (AU-65/665 ONLY)
(E) TRACKING FIX ADJ.
(M) ENVELOPE LINEARITY CONF.
NG
(M) ENVELOPE LINEARITY ADJ.
OK
(M) A/C HEAD HEIGHT, TILT and AZIMUTH CONF.
NG
(M) A/C HEAD ADJ.
OK
(M) A/C HEAD HORIZONTAL POSITION CONF.
NG
(M) A/C HEAD HORIZONTAL POSITION ADJ.
OK
NG
(M) ENVELOPE LINEARITY CONF.
OK
(E) FM CARRIER LEVEL ADJ. (Y and C)
(E) AT PB RF LEVEL ADJ. (Y and C)
(E) PB FREQUENCY RESPONSE ADJ. (Y and C)
(E) REC CURRENT ADJ. (AU-65/665 ONLY)
(E) REC FREQUENCY RESPONSE ADJ.
(E) FM AUDIO PB LEVEL ADJ.
(E) FM AUDIO REC CURRENT ADJ. (AU-65/665 ONLY)
END
Note:
(E) as Electrical Adjustment
(M) as Mechanical Adjustment

3-4. CLEANER ROLLER REPLACEMENT AND ADJUSTMENT

***Tool Required**
Eccentric Screwdriver

Removal

1. Remove the 2 screws (A) and remove the cleaner unit.
2. Remove the cleaner roller.

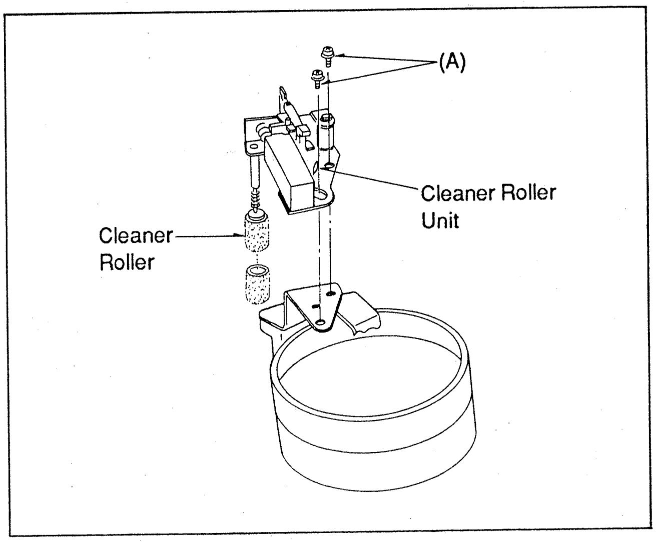
(A)
Cleaner Roller Unit
Cleaner Roller

Fig. 3-4-1 Cleaner Unit

Installation

1. Follow the removal steps in reverse order.

Cleaner Unit Position Adjustment

1. Push the solenoid and rotate the drum.
2. Confirm that the projection part (A) is positioned as center of a dent part (B) as shown in figure 3-4-2.
3. If it is not, loosen the 2 screws and insert the eccentric screw driver into hole (C) and adjust the cleaner position.

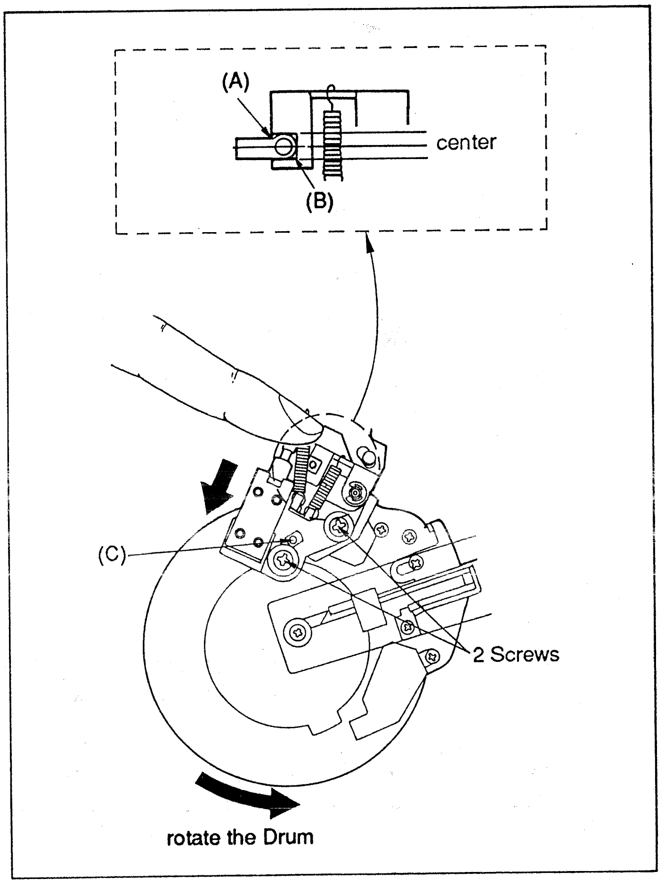
(A)
center
(B)
(C)
2 Screws
rotate the Drum

Fig. 3-4-2 Cleaner Unit Position

3-5. PINCH ROLLER ARM UNIT REPLACEMENT

Removal

1. Push down the ring drive gear (A) by using a screw driver and move the loading ring counterclockwise so that the Pinch Roller reaches the position as shown in figure 3-5-1.
2. Remove the E-ring (C).
3. Remove the Pinch Roller unit (B).
4. Remove spring. (Fig. 3-5-2)

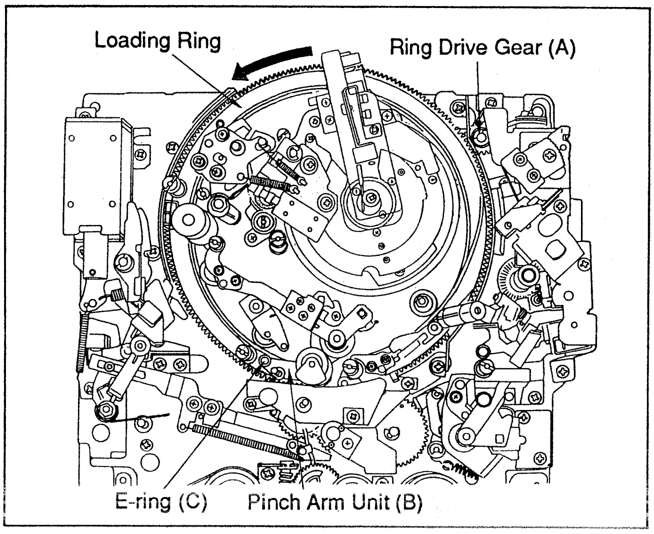
Loading Ring
Ring Drive Gear (A)
E-ring (C)
Pinch Arm Unit (B)

Fig. 3-5-1 Pinch Roller Arm Unit

Installation

1. Install a new Pinch roller unit and attach the spring, as originally installed, as shown in figure 3-5-2.
2. Turn the power on and insert a blank cassette. Playback the tape and observe the tape path. Be sure that no tape curling occurs on any post.

Note: When replacing the pinch roller, be sure not to lose the washer.

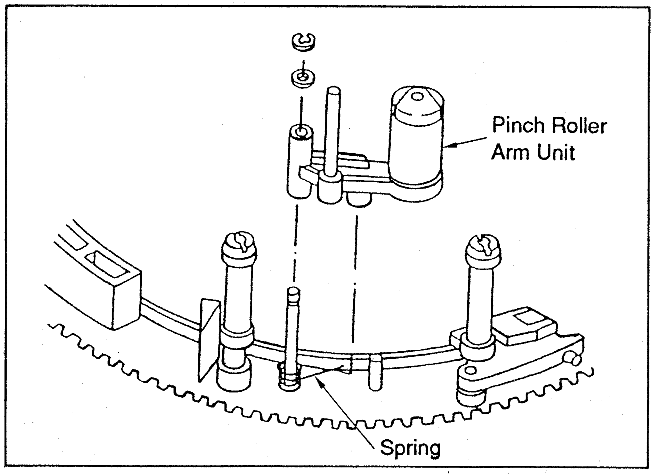
Pinch Roller
Arm Unit
Spring

Fig. 3-5-2 Spring Position

3-6. LOADING MOTOR BELT REPLACEMENT

Removal

1. Remove the loading belt to direction (A) as shown in figure 3-6-1.

Installation

1. Put new loading belt onto the loading motor first as shown in figure 3-6-2.
2. Then replace onto the wormgear pulley as shown in figure 3-6-2.
3. Clean the belt after replacement.

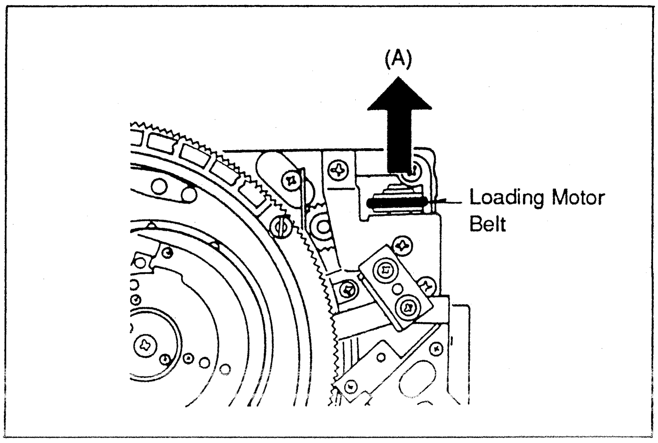
(A)
Loading Motor
Belt

Fig. 3-6-1 Loading Motor Belt (1)

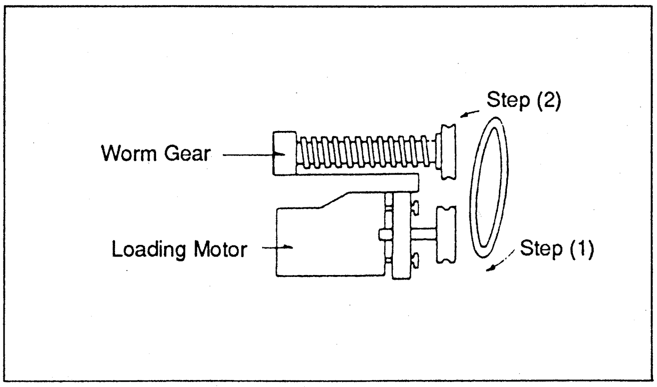
Step (2)
Worm Gear
Loading Motor
Step (1)

Fig. 3-6-2 Loading Motor Belt (2)

3-7. FRONT LOADING MOTOR BELT REPLACEMENT

Removal

1. Remove the belt from the wormgear shaft side pulley.
2. Remove the belt from the motor side.

Installation

1. Install the new belt in reverse order.
2. Clean the belt after replacement.

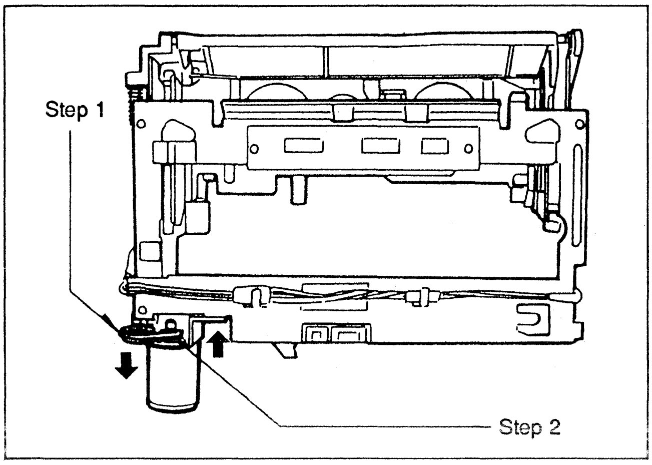

Fig. 3-7-1 Front Loading Motor Belt

3-8. TENSION UNIT REPLACEMENT AND ADJUSTMENT

***Tools Required**
Tentelometer (VFK0132)
Eccentric Screwdriver (VFK0357) (VFK0359)
Digital Voltmeter

3-8-1. SUPPLY TENSION SPRING PLATE AND STOPPER PIN BASE UNIT REPLACEMENT

Removal

1. Loosen the hex (A) and remove the Supply Tension Arm Unit as shown in figure 3-8-1.

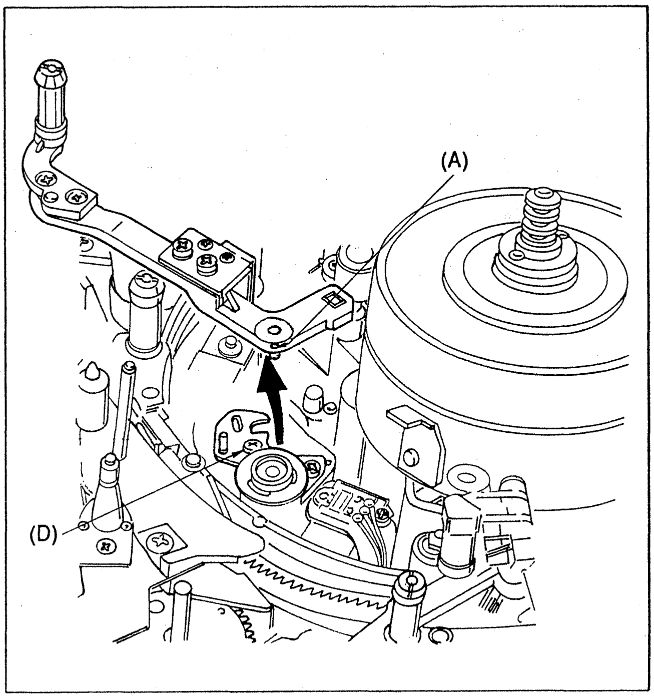

Fig. 3-8-1 Supply Tension Arm Unit

2. Unscrew the 2 screws (B) and remove the Spring Plate Unit as shown in figure 3-8-2.
3. Unscrew the 2 screws (C) and remove the Spring Plate as shown in figure 3-8-2.

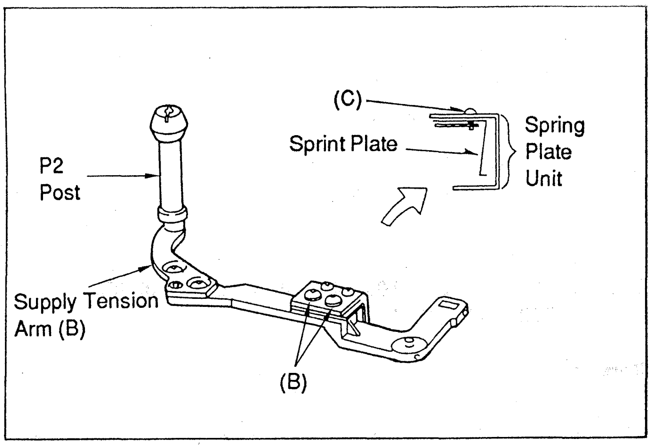

Fig. 3-8-2 Spring Plate Removal

4. Unscrew the screw (D) and remove the Stopper Pin Base Unit as shown in figure 3-8-1.

Installation

1. Install the new Spring Plate and Stopper Pin Base Unit in reverse order.

Note :
When installing the Supply Tension Arm Unit, the Stopper Pin is positioned into a rectangle hole of Spring Plate Unit as shown in figure 3-8-3 and tension pick-up post may have to be pushed from the bottom side. Because of the Tension pick-up post will slip down when installing as shown in figure 3-8-4.

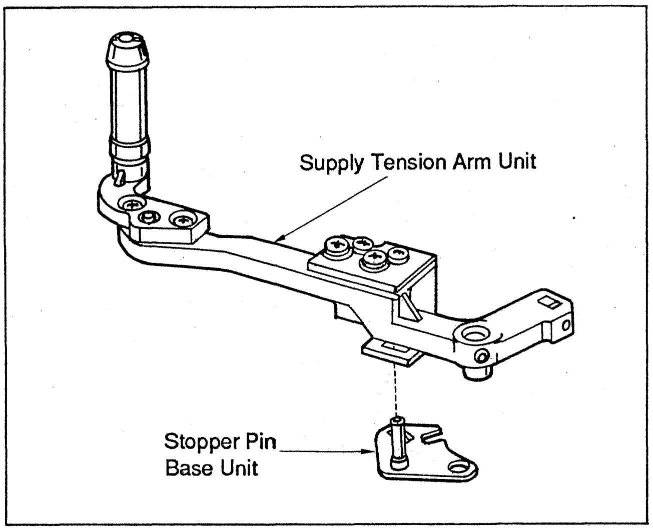
Supply Tension Arm Unit
Stopper Pin Base Unit

Fig. 3-8-3 S-Arm Installation

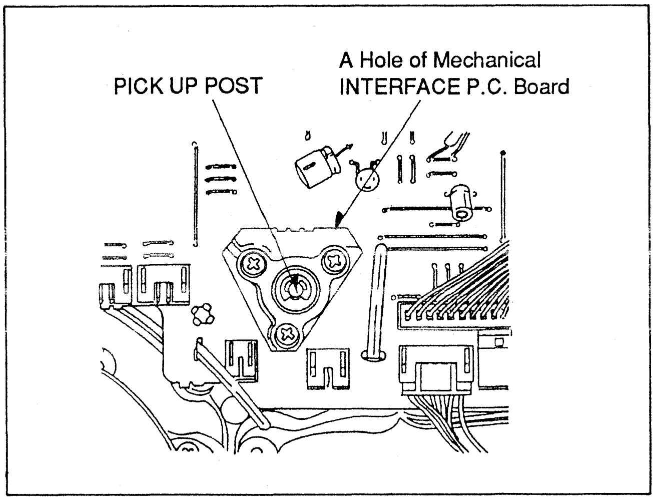
PICK UP POST
A Hole of Mechanical INTERFACE P.C. Board

Fig. 3-8-4 Pick-up Post

3-8-2. TAKE UP TENSION ARM UNIT AND STOPPER PIN BASE UNIT REPLACEMENT

Removal

1. Loosen the hex screw (A) and remove the Take Up Tension Arm Unit as shown in figure 3-8-5.
2. Remove the P11 Post from removed Take Up Tension Arm Unit. (Do not loosen the hex screw (C) of the P11 Post.)
3. Unscrew the screw (B) and remove the stopper Pin Base Unit as shown in figure 3-8-5.

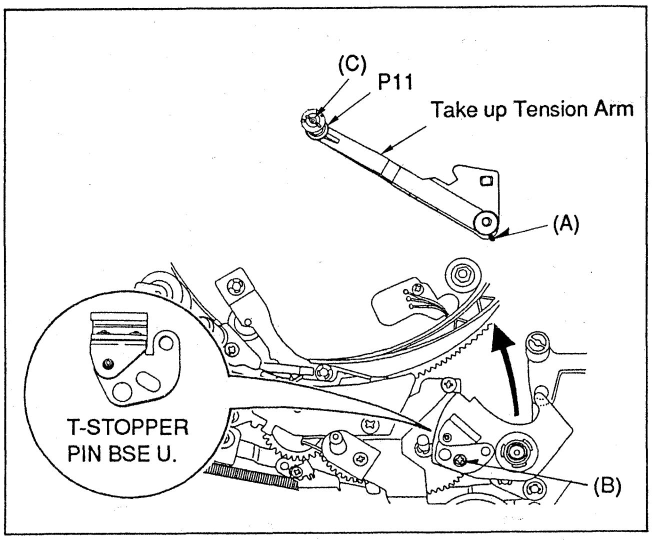
(C)
P11
Take up Tension Arm
(A)
T-STOPPER PIN BSE U.
(B)

Fig. 3-8-5 Take Up Tension Arm Unit

Installation

1. Install the removed P11 Post to new Take Up Tension Arm Unit.
2. Install the new Take Up Tension Arm Unit and Stopper Pin Base Unit in reverse order.

Note :

When install the Take Up Tension Arm Unit, the Stopper Pin is positioned into rectangular hole (D) of Take Up Tension Arm Base as shown in figure 3-8-6 and tension pick up post have to be pushed from the bottom side. Because of the tension pick-up post will go down when installing as shown in figure 3-8-7.

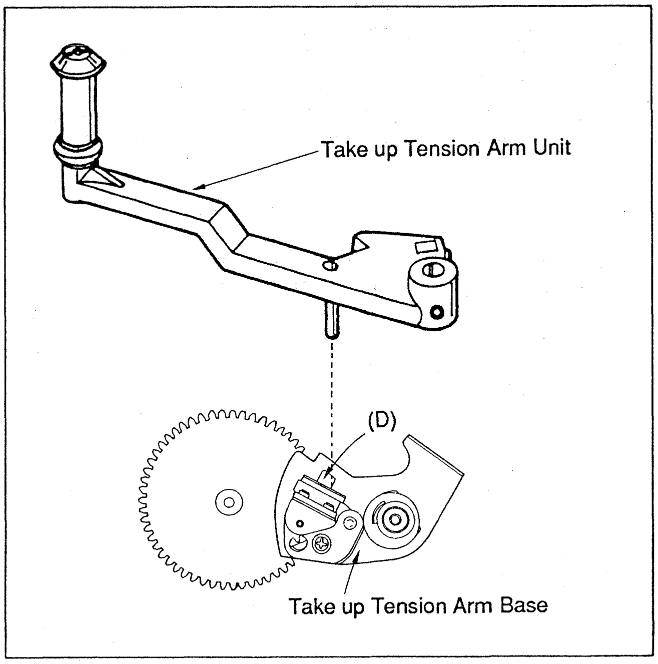
Take up Tension Arm Unit
(D)
Take up Tension Arm Base

Fig. 3-8-6 T-Arm Installation

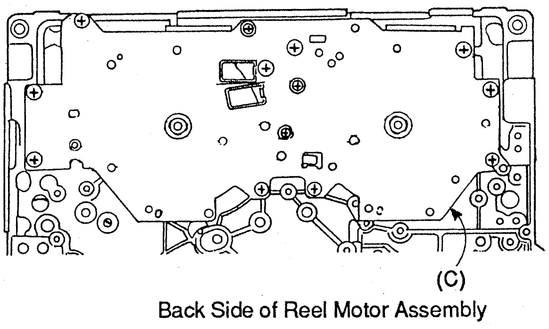

Fig. 3-8-7 Pick-up Post

3-8-3. MAGNET CLEARANCE ADJUSTMENT (Take Up side only)

***Tools Required :**
Dummy Plug (1) (VFK0361)
Hex Wrench
Thickness Gauge

1. Turn the power off.
2. Remove the front loading unit and connect the dummy plug (1) into P406 socket.
3. Turn the power ON.
4. Press the stop button without the tape.
5. observe the clearance (A) between magnet and sensor.
   This clearance should be between 0.5 +/- 0.1mm as shown in figure 3-8-8.
6. If not, loosen the hex screw (B) and adjust the position of the magnet using thickness gauge so that the clearance (A) is within specifications as shown in figure 3-8-8.
7. Tighten the hex screws.
8. Lock the magnet using loctite.

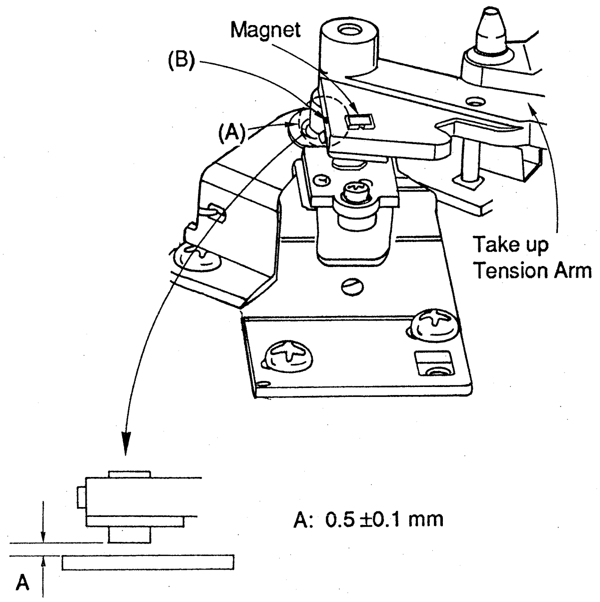

Fig. 3-8-8 Tension magnet

3-8-4. TENSION ADJUSTMENT

***Tools Required :**
Tentelometer (VFK0132)
Eccentric Screwdrivers (VFK0357)(VFK0359)
Digital Voltmeter
Dummy Plug 1 (VFK0361)

Note 1 :
Before performing tape tension confirmation Tension Meter should be calibrated as following procedure.

TENSION METER CALIBRATION PROCEDURE

1. Set a MII Metal tape to an ounce weight.
2. Pull up a tape by hand as shown in figure 3-8-9.
3. Adjust VR on the Tension Meter so that the tension meter reading is 1 ounce.

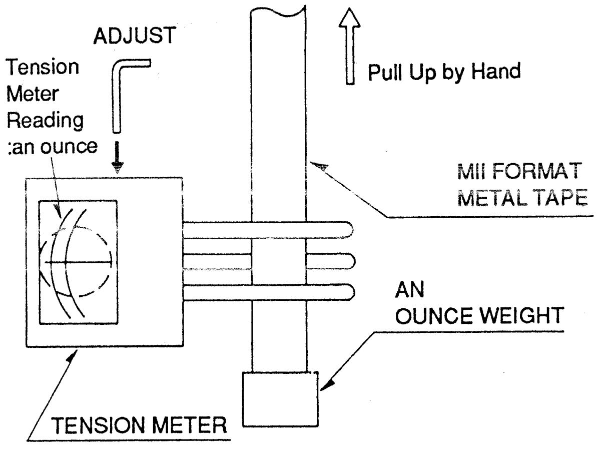

Fig. 3-8-9 Tension Meter Calibration

TENSION ADJUSTMENT (MECHANICAL)

1. Remove the front carriage unit and connect the dummy plug (1) into P406 socket.
2. Extend the SERVO(W5) board and turn power on.
3. Set the SYNC AUTO switch on the front sub panel to AUTO position.
4. Place the unit in the EJECT mode and connect a digital voltmeter to TP303. Adjust VR302 for 2.5 +/- 0.01 (V/DC). Connect the digital voltmeter to TP304, and adjust VR303 for 2.5 +/- 0.01 (V/DC).
5. Connect the digital voltmeter to TP312 and adjust VR308 for 35 +/- 1 (mV DC).
6. Set the mechanical neutral adjustment plate over the reel tables and fix the plate as shown in figure 3-8-10.

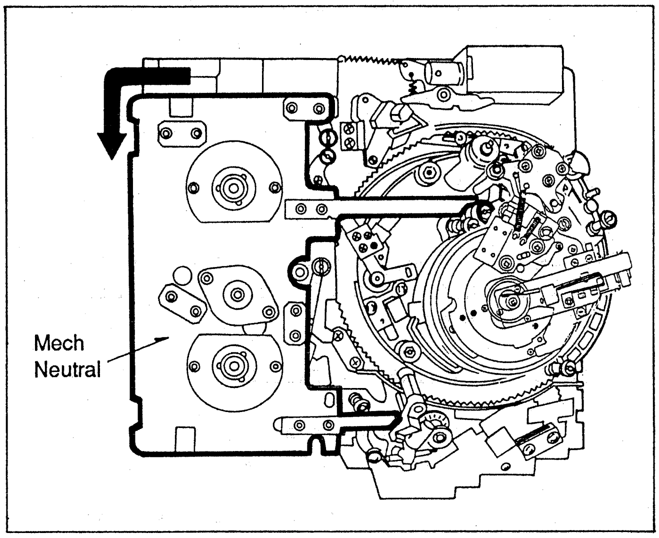
Mech
Neutral

Fig. 3-8-10 Mech Neutral Plate

7. Connect the jumper wire between TP19 and TP20 to defeat the tape slack function.
8. Place the unit in the STOP mode. After loading is completed make sure that the P2 post touches the arm of the mechanical neutral adjustment plate as shown in figure 3-8-11.

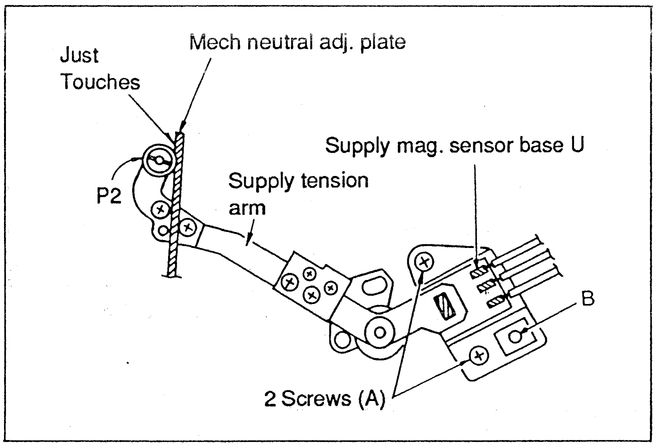
Just
Touches
Mech neutral adj. plate
Supply mag. sensor base U
P2
Supply tension
arm
B
2 Screws (A)

Fig. 3-8-11 Supply Tension

9. Measure the voltage at TP303 and TP304, and verify that it is 2.5 +/- 0.05VDC.
10. If it is not, loosen the 2 screws (A) and insert the eccentric screwdriver into hole (B). (figure 3-8-11, 3-8-12)

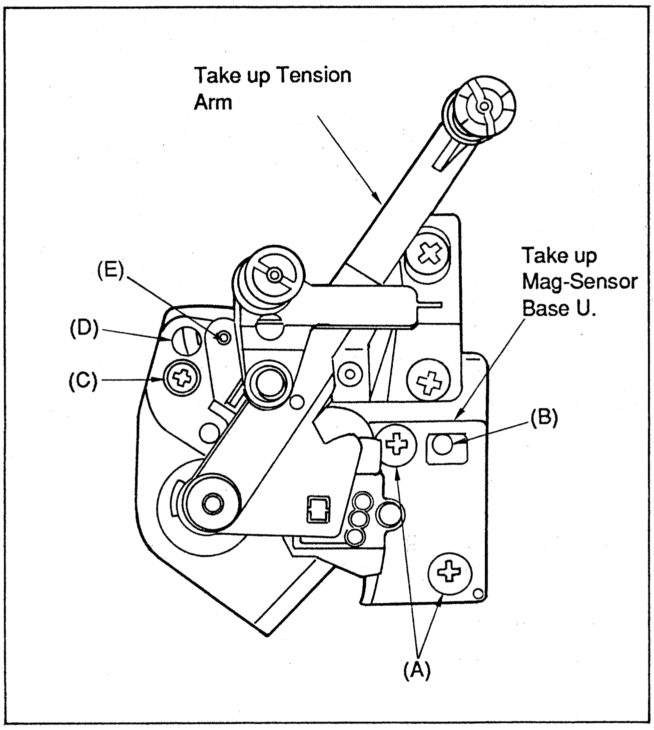
Take up Tension
Arm
Take up
Mag-Sensor
Base U.
(E)
(D)
(C)
(B)
(A)

Fig. 3-8-12 Take Up Tension

11. Adjust the supply and take up magnet sensor base unit (figure 3-8-11, 3-8-12) so that the voltage at TP303 and TP304 are 2.5 +/- 0.05 VDC.

Note :
Do not use the magnetic driver, when adjust the magnet sensor base.

12. Tighten the screws (A) (make sure the voltage at TP303 and TP304 does not change) and remove the mechanical neutral adjustment plate.
13. Place the cassette over the reel tables (MP90 should be used) and place the weight on the cassette to hold it in place. (full roll of solder)
14. Place the unit in the PLAY mode from tape beginning and confirm that the tape tension between P1 and P2 is 23 +/- 2 grams as shown in figure 3-8-13. (Tape tension confirmation should be done after the tape movement has stabilized.)

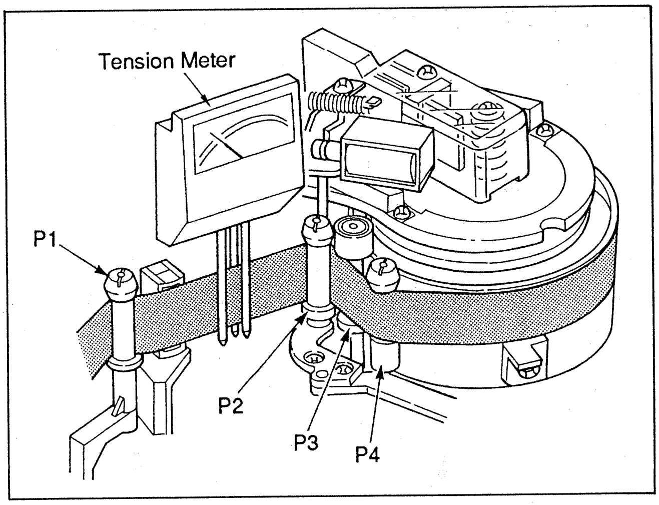

Fig. 3-8-13 Supply Tension

15. If it is not, loosen screw (A), and insert the eccentric screwdriver into hole (B) and adjust the tension as shown in figure 3-8-14.

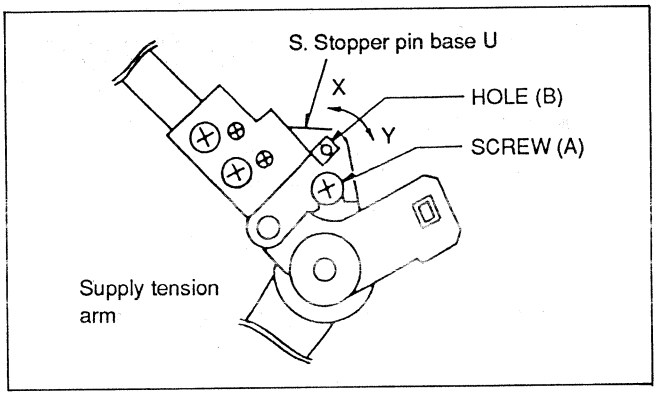

Fig. 3-8-14 Supply Tension Adj.

16. Tighten screw (A).
17. Confirm that the tape tension between P9 and P10 post is 23 +/- 2 grams as shown in figure 3-8-15.

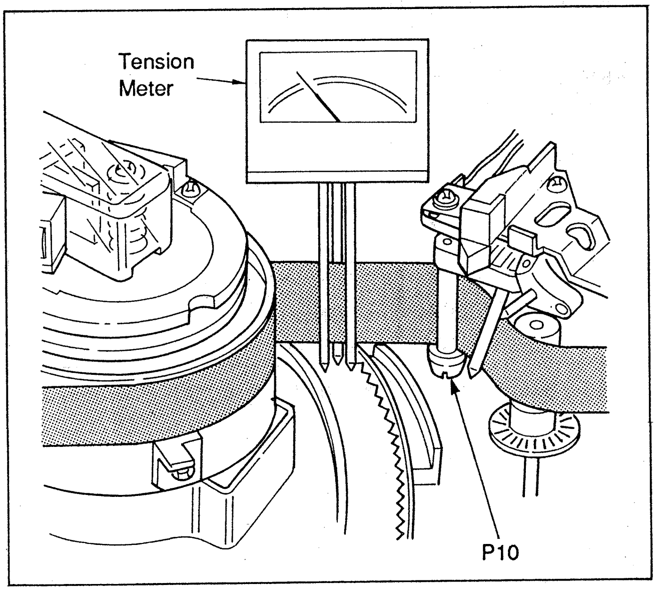

Fig. 3-8-15 Take Up Tension

18. If it is not, loosen the screw (C) and insert the eccentric screwdriver into hole (D) as shown in figure 3-8-12.
19. Roughly adjust the take up tension to 20 grams between P9 and P10.
20. Tighten the screw (D).
21. Slightly adjust the hex screw (E) to 23 +/- 2 grams between P9 and P10.
22. Place the unit in the SHTL or VAR X-1 mode around tape beginning portion and adjust VR309 so that the supply tension between P4 and drum entrance side is 20 +/- 1 grams as shown in figure 3-8-16.
23. Place the unit in the SHTL or VAR X-1 mode around tape beginning portion and adjust VR305 so that the take up side tension is 30 - 35 grams between P9 and P10 post as shown in figure 3-8-17.

Note :
When the tension is adjusted in the SHTL or VAR X-1 (or REWIND) mode, the tension meter is turned around as shown in figure 3-8-16, 3-8-17.

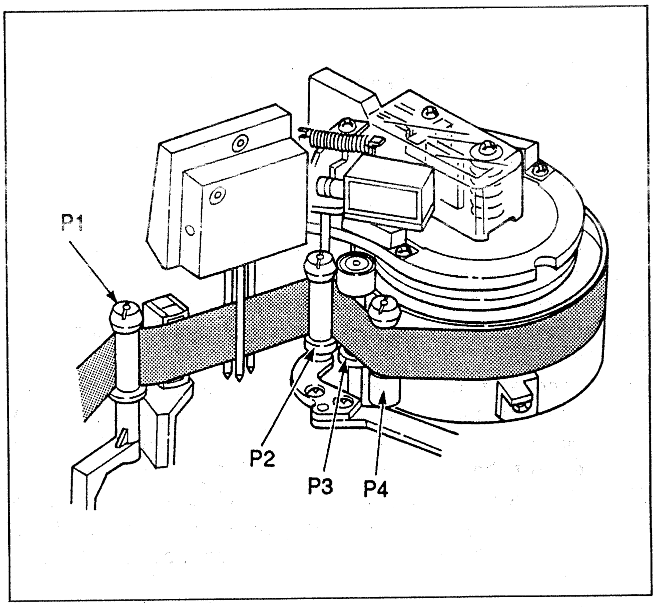

Fig. 3-8-16 Supply Tension

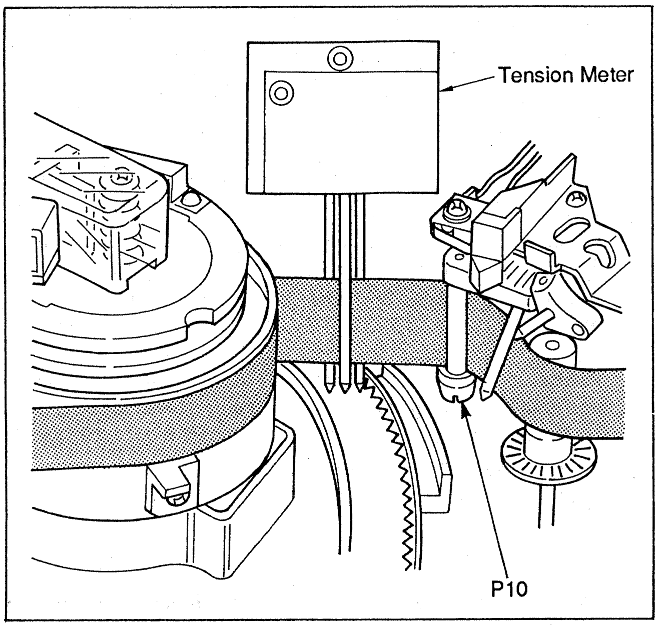
Tension Meter
P10

Fig. 3-8-17 Take Up Tension

23. Verify the voltage at TP302 and TP310 using digital voltmeter.
24. Place the unit in the PLAY mode and adjust VR301 so that the voltage (TP302)-(TP310) is -200 +/- 5 mVDC.
25. Connect the jumper wire between TP309 and TP311 and place the unit in the PLAY mode.
26. Adjust VR307 so that the take up tension between P9 and P10 is 8 - 10 grams.
27. Remove the jumper wire between TP309 and TP311.
28. Place the unit in the FAST FORWARD mode from tape beginning portion (MPL90 should be used) and adjust VR304 so that the supply side tension between P1 and P2 is 15 - 20 grams.
29. Place the unit in the REWIND mode from tape ending (MPL90 should be used) and adjust VR306 so that the supply side tension between P1 and P2 is 40 - 50 grams.
30. Remove the jumper wire between TP19 and TP20.
31. Place the unit in the PLAY mode without tape and confirm that the AUTO OFF mode is functioned.

3-9. REEL STAND UNIT REPLACEMENT

Replacement

1. Remove the B1 SYSTEM CONTROL and B2 TCG/TCR (option for AU-65/63/62) P.C.Board from front-sub panel as shown below.

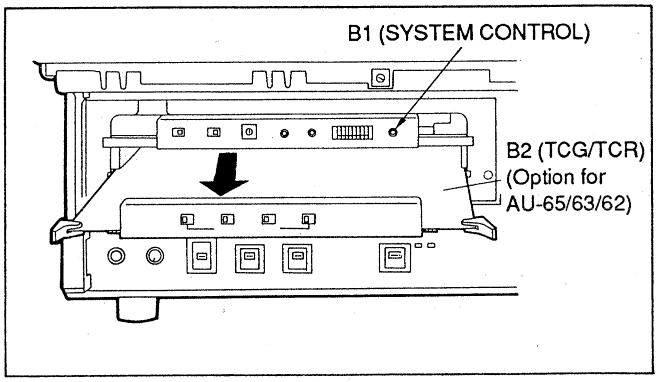
B1 (SYSTEM CONTROL)
B2 (TCG/TCR)
(Option for
AU-65/63/62)

Fig. 3-9-1. B1 and B2 unit Removal

2. Remove the bottom panel.
3. Remove the 3 screws (A) on MECH. INTERFACE CIRCUIT P.C.Board and move the P.C.Board as shown in figure 3-9-2.
4. Disconnect the 7 connectors (P61020, P61017, P61002, P61025, CN121, CN110, CN111) on the MECH. INTERFACE CIRCUIT P.C.Board then move the P.C.Board as shown in figure 3-9-2.

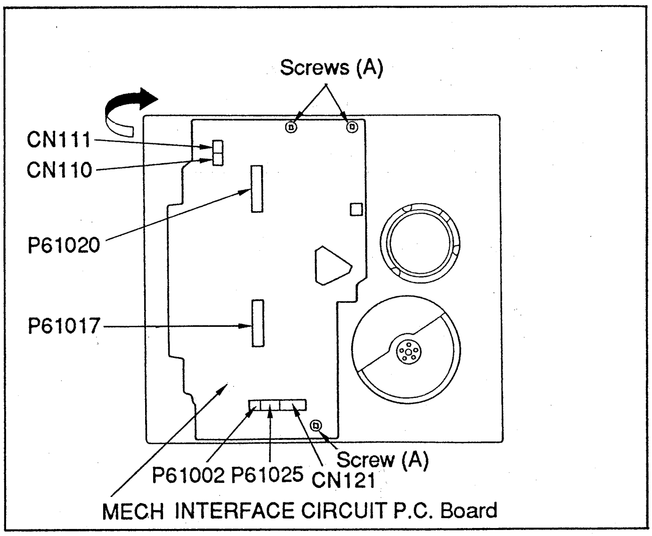
Screws (A)
CN111
CN110
P61020
P61017
Screw (A)
P61002
P61025
CN121
MECH INTERFACE CIRCUIT P.C. Board

Fig. 3-9-2 MECH INTERFACE CIRCUIT P.C.Board

5. Remove the 9 screws (B) and remove Reel base unit.

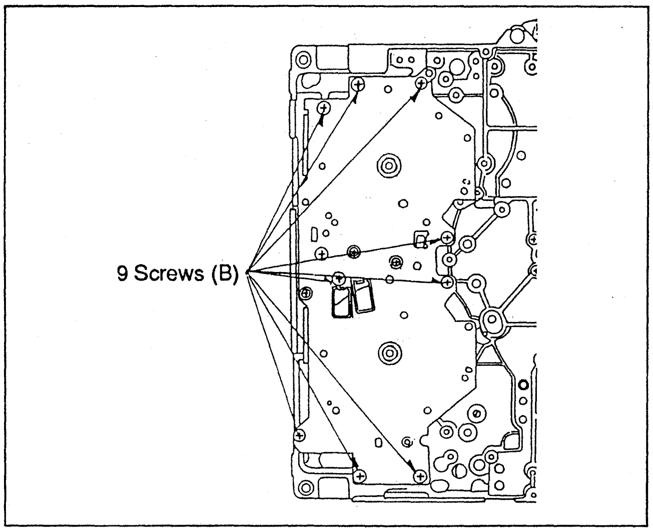

Fig. 3-9-3 Reel Base Unit Removal

6. Pull and remove the Reel stand unit.

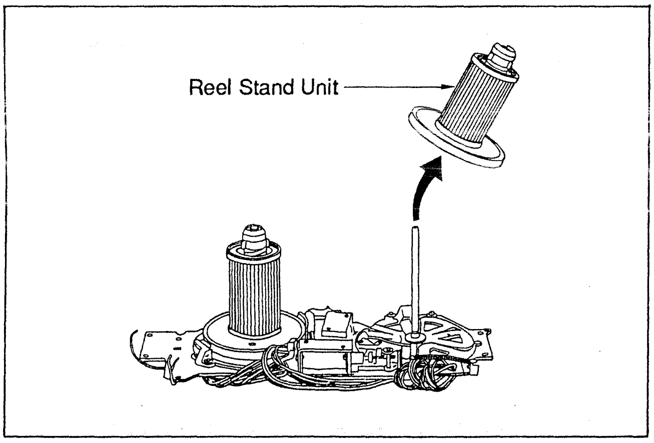
Reel Stand Unit

Fig. 3-9-4 Reel Stand Unit Removal

Installation

1. Reverse the previous steps.

3-10. A/C HEAD REPLACEMENT AND ADJUSTMENT

3-10-1. Replacement

***Tools required:**
Nut Driver (7m/m) (VFK0676)
Hex Wrench (VFK0326)

Removal

1. Remove the nut (A), loosen the hex-screw (B), hang off the height adjustment spring and then remove A/C Head assembly as shown in figure 3-10-1.

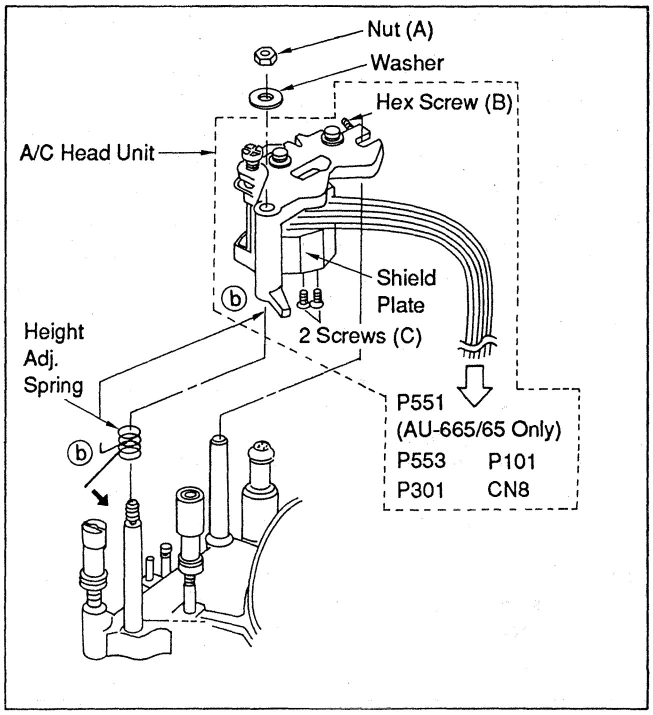
Nut (A)
Washer
Hex Screw (B)
A/C Head Unit
Shield Plate
2 Screws (C)
Height Adj. Spring
ⓑ
ⓑ
P551 (AU-665/65 Only)
P553
P101
P301
CN8

Fig. 3-10-1 A/C Head Removal

2. Remove the shield plate by removing 2 screws (C) as shown in figure 3-10-1 and disconnect the connectors which is connected to Audio P.C.Board (W6) as shown in figure 3-10-2.
3. Unsolder green cable only as shown in figure 3-10-3.

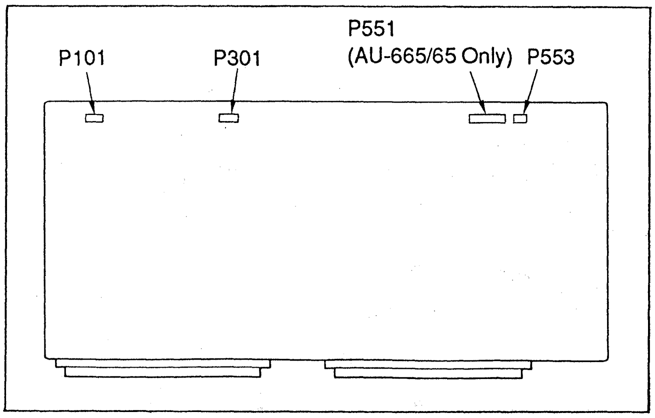
P101
P301
P551 (AU-665/65 Only)
P553

Fig. 3-10-2 Audio P.C.Board (W6)

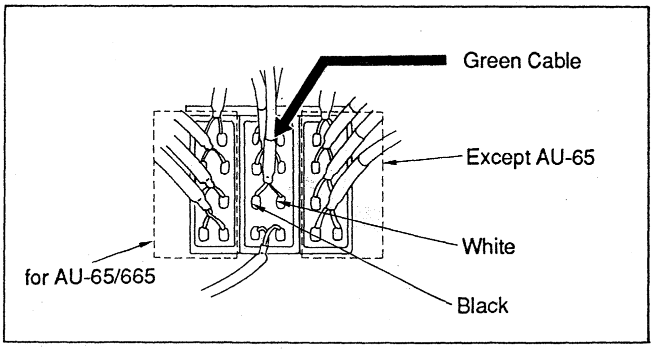
Green Cable
Except AU-65
White
for AU-65/665
Black

Fig. 3-10-3 A/C Head Connector

3-10-2. Installation

1. Confirm that the head and head mounting plate is set to be approximately 1 m/m with the plate parallel as shown in figure 3-10-4. If it is not, adjust the each screws to these plate parallel.
2. Solder the green cable to new A/C Head. (Supplied service parts is connected a green cable. Therefore, it is necessary to remove green cable before installing)
3. Reinstall the shield plate onto the A/C head assembly
4. Connect the removed connectors to W6 P.C.Board.
5. Install the new A/C head assembly.
6. Hang on the height adjustment spring and, tighten the nut (A) as shown in figure 3-10-5.
7. Clean the surface of the A/C head.

Note :
Hex screw (B) is kept loose until finish the A/C Head height adjustment.

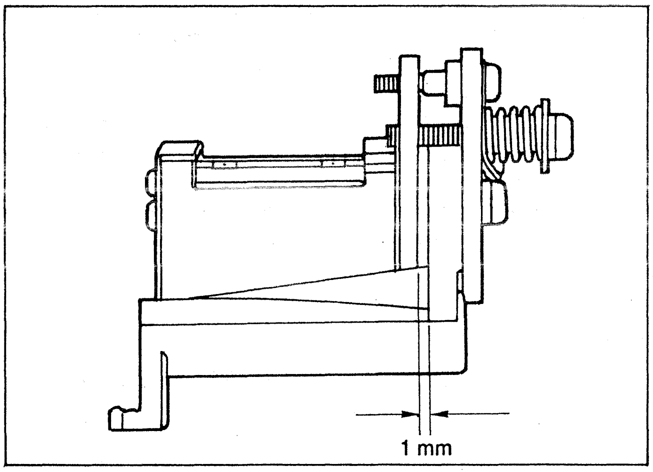

Fig. 3-10-4 A/C Head Assembly

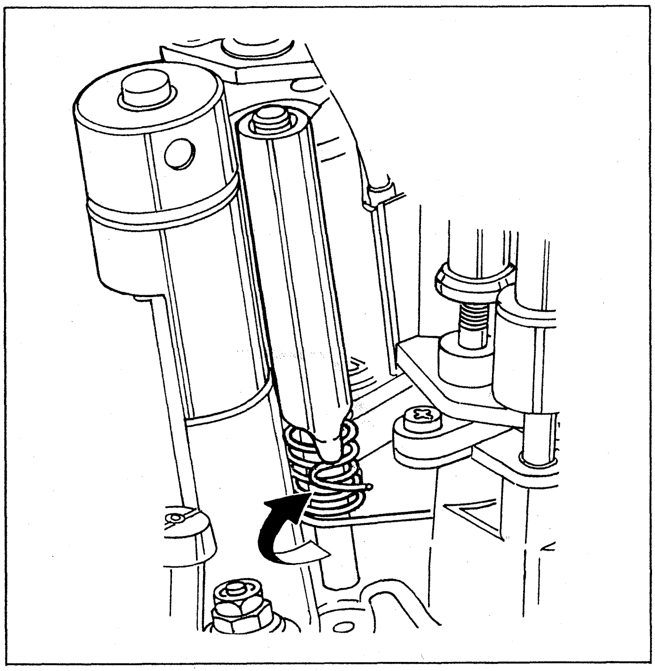

Fig. 3-10-5 Adjustment Spring

3-10-3. Mechanical Adjustment

***Tools Required :**
Alignment Tape
Nut Driver (7m/m) (VFK0676)
Hex Wrench (VFK0326)

Purpose of each screws

A : Tilt Adjustment
B : Fix for A/C Head Height
C : Height Adjustment
D : Coarse Azimuth Adjustment
E : Spring Tension and Fine Azimuth Adjustment
F,G : Fix for A/C Head Horizontal Position
H : Horizontal Position Adjustment Hole

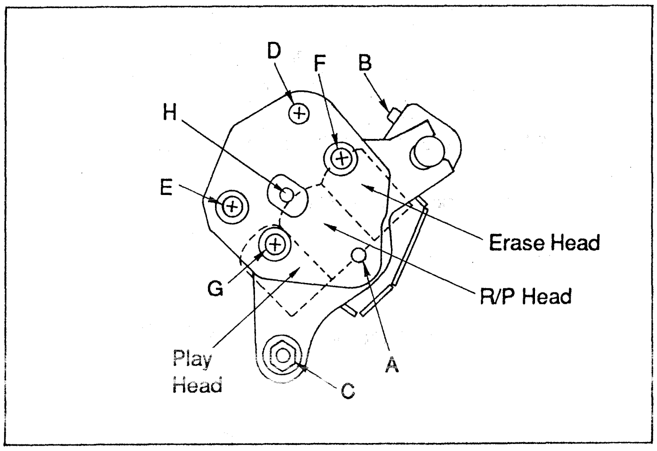

Fig. 3-10-6 A/C Head

Following figure shows A/C Head constructions for each models.

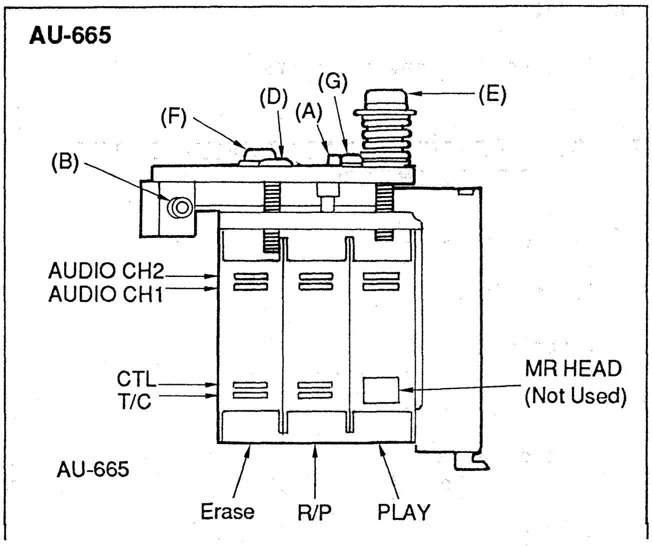

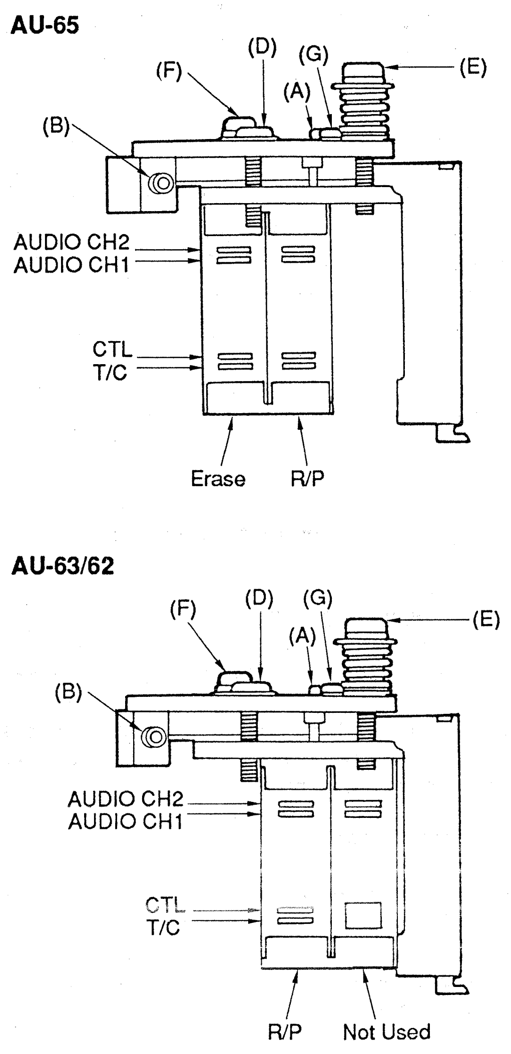
AU-65
(D)
(G)
(F)
(E)
(A)
(B)
AUDIO CH2
AUDIO CH1
CTL
T/C
Erase
R/P
AU-63/62
(F)
(D)
(G)
(E)
(A)
(B)
AUDIO CH2
AUDIO CH1
CTL
T/C
R/P
Not Used

Fig. 3-10-7 A/C Head for Each Models

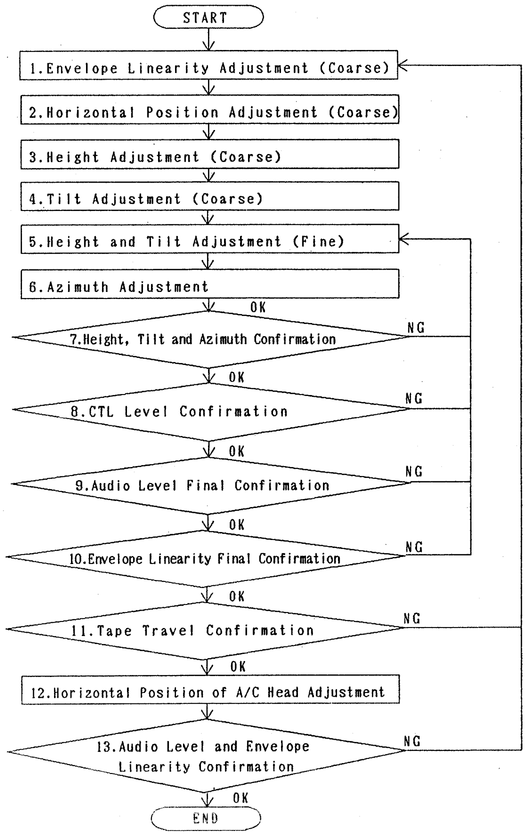
START
1.Envelope Linearity Adjustment (Coarse)
2.Horizontal Position Adjustment (Coarse)
3.Height Adjustment (Coarse)
4.Tilt Adjustment (Coarse)
5.Height and Tilt Adjustment (Fine)
6.Azimuth Adjustment
OK
7.Height, Tilt and Azimuth Confirmation
NG
OK
8.CTL Level Confirmation
NG
OK
9.Audio Level Final Confirmation
NG
OK
10.Envelope Linearity Final Confirmation
NG
OK
11.Tape Travel Confirmation
NG
OK
12.Horizontal Position of A/C Head Adjustment
13.Audio Level and Envelope Linearity Confirmation
NG
OK
END

Fig. 3-10-8 A/C Head Adjustment Flow Chart

Output Signal	P.C.Board	Test Point	Remarks
Y RF (R/P Head)	W3 (MOD/DEMOD)	TP301	also available WFM OUT for AU-665 only
C RF (R/P Head)	W3 (MOD/DEMOD)	TP701	
Head Switching	W5 (SERVO)	TP7	-------
Linear Audio CH1 (R/P Head)	W6 (AUDIO)	TP101	also available AUDIO OUT
Linear Audio CH2 (R/P Head)	W6 (AUDIO)	TP301	
Linear Audio CH1 (Monitor Head)	W6 (AUDIO)	TP271	for AU-665 only
Linear Audio CH2 (Monitor Head)	W6 (AUDIO)	TP471	
CTL Pulse	W5 (SERVO)	TP109	-------

Fig. 3-10-9 Test Point Chart

When adjust the A/C head assembly perform the following conditions.

*In order to keep the flat envelope, observe the RF envelope (Y or C) at the same time.
*In order to avoid the tape damage, always check that the tape curling does not occur at P5 and P6 post
*Head select switch on the pull out drawer is set to R/P HEAD position for AU-665 and disconnect P10 on AT POWER P.C.Board to stop the Auto Tracking function for AU-63.
*Follow the flow chart when adjust the A/C Head assembly as shown in figure 3-10-8.
*When adjust the audio level, use the following test points as shown in figure 3-10-9.

1) ENVELOPE LINEARITY ADJUSTMENT (COARSE)

Note :
Tape tension is completely adjusted.

1. Connect the scope CH1 to Y or C RF out (refer to Test Point Chart) and CH2 to TP7 on the W5 SERVO to trigger the scope.
2. Playback the linearity portion of the alignment tape.
3. In order to achieve the roughly flat envelope, tighten the nut (C) clockwise so that the CTL head touches the tape CTL track and servo is locked. At that time, make sure the RF envelope is maximized on the Tracking meter by using the Tracking VR.
4. Confirm that the tape is not curling at P5 and P6 post as shown in figure 3-10-10.
5. If the tape is curling at P5 and P6, readjust the A/C Head height by nut (c), or adjust the A/C Head Tilt by hex screw (A). (Do not adjust the P5 and P6 upper flange)

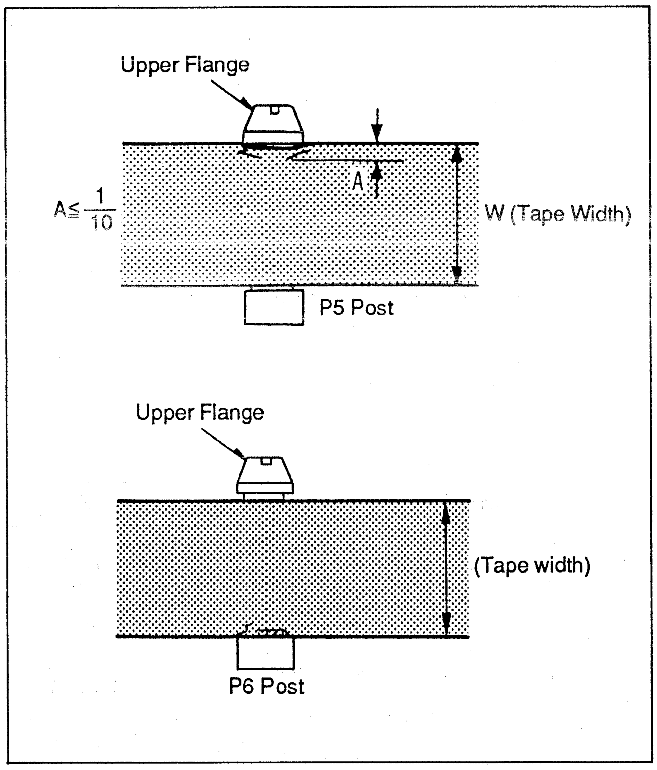

Fig. 3-10-10 Deforming Spec

2) HORIZONTAL POSITION ADJUSTMENT (COARSE)

1. Connect the scope CH1 to Y or C RF out (refer to Test Point Chart) and CH2 to TP7 on the W5 SERVO to trigger the scope.
2. Playback the linearity portion of the alignment tape and confirm that the Tracking VR is center detent position.
3. Loosen the 2 screws (F), (G) 1/4 of a turn counterclockwise and insert the eccentric screw driver into the hole (H) as shown in figure 3-10-11.
4. Turn the eccentric screwdriver and adjust the horizontal position of the A/C Head so that the RF envelope is maximum, on the Tracking meter on the front panel.
5. Alternately tighten 2 screws (F), (G) until both screws are tight.

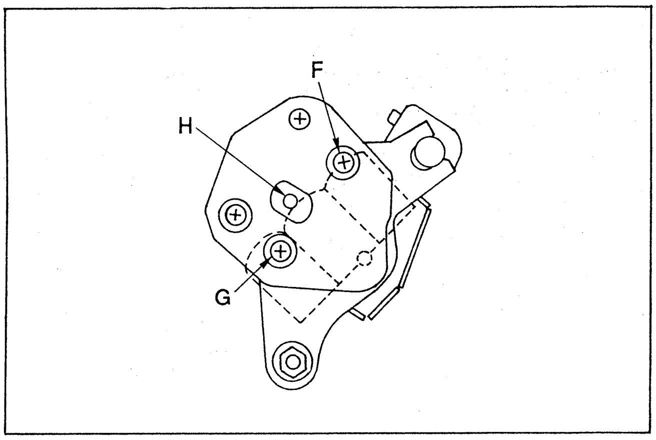

Fig. 3-10-11 Horizontal Position

3) HEIGHT ADJUSTMENT (COARSE)

1. Playback the 7.5KHz portion of the alignment tape.
2. Adjust the nut (C) so that the audio levels, CH1 and CH2 are maximized on the audio level meter on the front panel.

4) TILT ADJUSTMENT (COARSE)

1. Playback the 7.5KHz portion of the alignment tape.
2. Adjust hex (A) screw so that the CH1 and CH2 audio levels are increased maximum at the audio level meter on the front panel.

5) HEIGHT AND TILT ADJUSTMENT (FINE)

Note :
Observe the audio level, CH1 audio is reference for A/C Head mechanical adjustment. Because the CH2 audio track is sometimes edge damaged at P5 upper flange.

1. Connect the scope CH1 to TP101 and CH2 to TP301 on the W6 AUDIO P.C.Board.
2. Playback the 7.5KHz portion of the alignment tape.
3. In order to check the A/C Head height, gently press down the tape upper edge from the top (slight finger pressure) at A/C Head entrance side as shown in figure 3-10-12 and check the audio level.
4. If the audio level increases, turn the nut (C) counterclockwise slightly so that the audio level is increased as shown in figure 3-10-13.

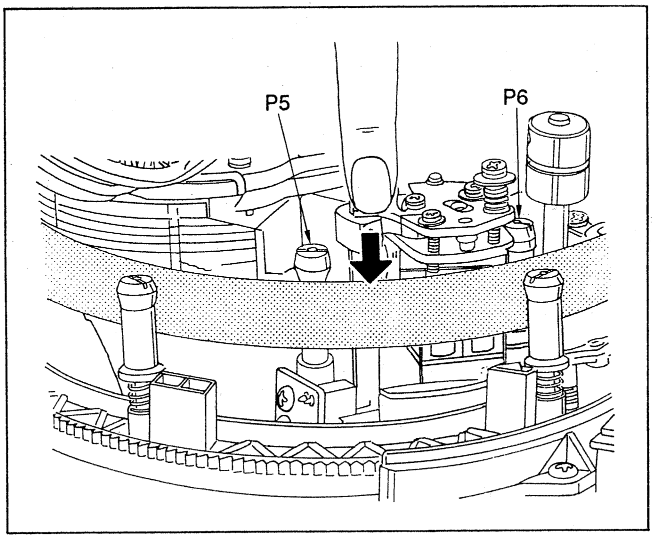

Fig. 3-10-12 A/C Head Height Check (1)

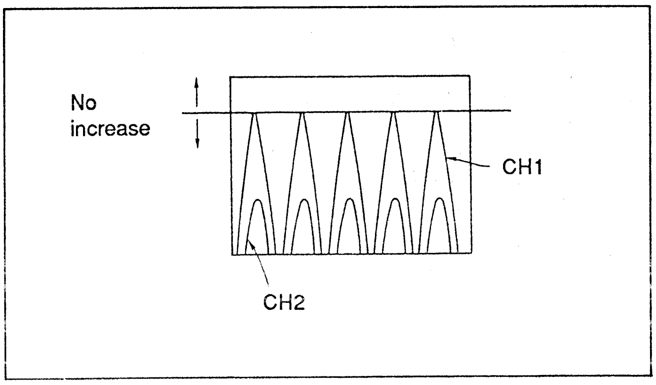

Fig. 3-10-13 Audio Level

5. Gently press up the tape lower edge from the bottom (by using the hex wrench) at A/C Head exit side as shown in figure 3-10-14 and check the audio level.
6. If the audio level increases, turn the nut (C) clockwise slightly so that the audio level is maximized as shown in figure 3-10-13.

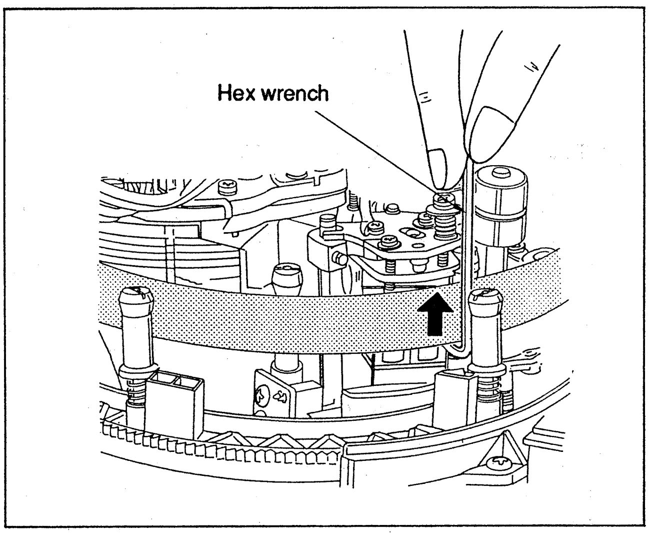

Fig. 3-10-14 A/C Head Height Check (2)

7. Tighten the hex screw (B).

Note :
When the hex screw (B) is tightened, audio azimuth will change. In this case, adjust 2 screws (D) and (E) to achieve a roughly same azimuth.

8. In order to check the A/C Head Tilt, gently press the tape upper edge from the side (slight finger pressure) at A/C Head entrance side as shown in figure 3-10-15 and check the audio level.
9. If the audio level is increased, turn the hex screw (A) counterclockwise slightly so that the audio level is increased maximum as shown in figure 3-10-13.
10. After adjustment of tilt, A/C Head height reconfirmation is necessary.

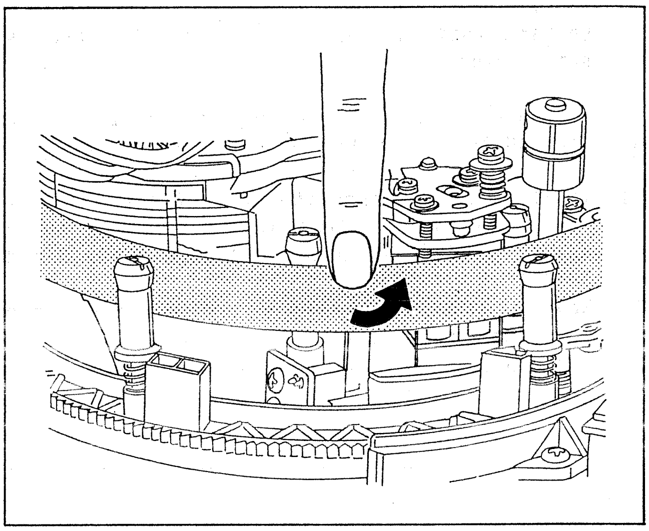

Fig. 3-10-15 A/C Head Tilt Check

6) AZIMUTH ADJUSTMENT

1. Connect the scope CH1 to TP101 and CH2 to TP301 on the W6 AUDIO P.C.Board.
2. Playback the 15KHz portion of the alignment tape.
3. Loosen screw (E) and adjust the screw (D) so that the CH1 and CH2 phase are the same as shown in figure 3-10-16 and 3-10-17.

   for AU-65/63/62: +/- 15 degree (+/- 2.78 usec)
   for AU-665 : +/- 10 degree (+/- 1.85 usec)

4. Hold a maximum audio level and tighten the 2 screws with (D) and (E) slightly.
5. Confirm that the audio level is maximum.

7) HEIGHT, TILT AND AZIMUTH CONFIRMATION

1. Connect the scope CH1 to TP101 and CH2 to TP301 on the W6 AUDIO P.C.Board.
2. Playback the 7.5KHz portion of the alignment tape for check the height and Tilt.
3. Gently press down the tape upper edge from the top (slight finger pressure) at A/C Head entrance side as shown in figure 3-10-12 and check the audio level.

4. If the audio level is increased, turn the nut (C) counterclockwise slightly so that the audio level is increased.
5. Gently press up the tape lower edge from the bottom (by using the hex wrench or something) at A/C Head exit side as shown in figure 3-10-14 and check the audio level.
6. If the audio level is increased, turn the nut (C) clockwise slightly so that the audio level is maximized.
7. Gently press the tape upper edge from the side (slight finger pressure) at A/C Head entrance side as shown in figure 3-10-15 and check the audio level.
8. If the audio level is increased, turn the hex screw (A) counterclockwise with small order so that the audio level is increased maximum as shown in figure 3-10-13.
9. Playback the 15KHz portion of the alignment tape.
10. Confirm that the audio CH1 and CH2 phase is same azimuth.

    for AU-65/63/62: +/- 15 degree (+/- 2.78 usec)
    for AU-665   : +/- 10 degree (+/- 1.85 usec)

11. If it is not, loosen the screw (E) and adjust the screw (D) so that the 2 channels audio phase is same as shown in figure 3-10-16 and 3-10-17.
12. Hold a same audio phase and maximum audio level and alternately tighten up the 2 screws (D) and (E) until both screws are tight.
13. Confirm that the audio level is maximum.

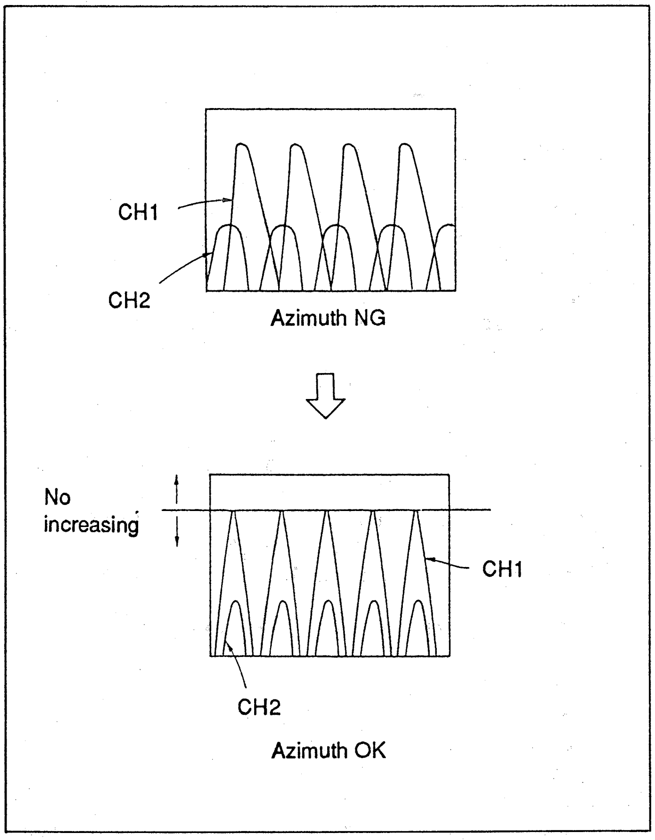

Fig. 3-10-16 Audio Azimuth (1)

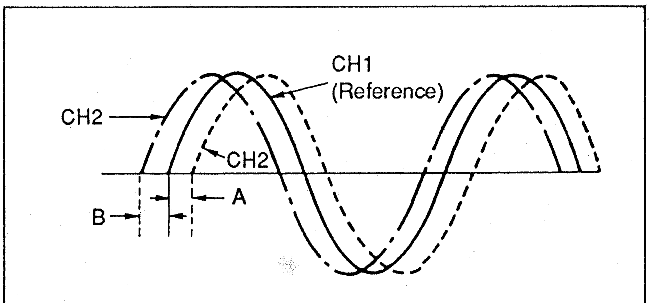

A: +2.78 µsec for AU-65/63/62
A: +1.85 µsec for AU-665
B: −2.78 µsec for AU-65/63/62
B: −1.85 µsec for AU-665

Fig. 3-10-17 Audio Azimuth (2)

8) CTL LEVEL CONFIRMATION

1. Connect the scope TP109 on the W5 SERVO P.C.Board.
2. Playback the 7.5KHz portion of the alignment tape.
3. Confirm that the CTL pulse is more than 1.2Vp-p as shown in figure 3-10-18.
4. If it is not, readjust the nut (C) and hex screw (A).
5. After readjustment, audio level confirmation is necessary.

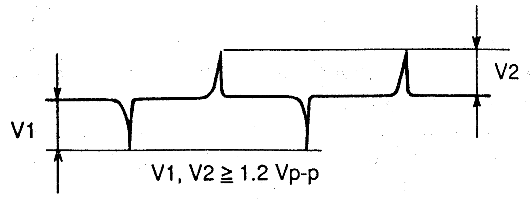

Fig. 3-10-18 CTL Pulse

9) AUDIO LEVEL FINAL CONFIRMATION

1. Connect the scope CH1 to TP101 and CH2 to TP301 on the W6 AUDIO P.C.Board.
2. Playback the 7.5KHz portion of the alignment tape.
3. Gently press up and down on the tape edge at A/C Head entrance side and A/C Head exit side. (refer to height and Tilt adjustment)
4. If audio level increases, readjust the nut (C) or hex (A) screw as needed.
5. Pull the Audio PB VR on the front panel and set the audio level 0 dB by adjusting the Audio PB VR.
6. Gently tap the supply tension arm and confirm the audio level as shown in figure 3-10-19.

7. If the audio level is increased more than +0.3dB at Audio Meter, readjust the hex screw (A).

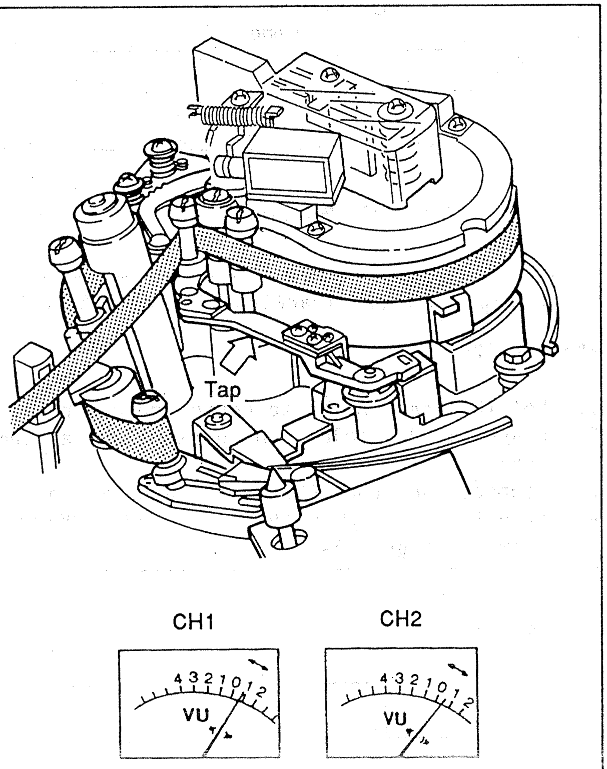

Both channel are increased less than +0.3 dB.

Fig. 3-10-19 Audio Level Final Check

Following steps are monitor head tilt confirmation for AU-665 only;

8. Supply a 10KHz sinewave to AUDIO IN and record the signal.
9. Set the HEAD SELECT switch to TAPE position.
10. Pull the Audio REC VR on the front panel and set the audio level 0dB by adjusting the Audio REC VR.
11. During recording, gently tap the supply tension arm and confirm that the Audio Meter indication is within +/-1dB.
12. If it is not, readjust the hex screw (A).

10) ENVELOPE LINEARITY FINAL CONFIRMATION

1. Connect the scope CH1 to Y or C RF out (refer to Test Point Chart) and connect the scope CH2 to TP7 on the W5 SERVO P.C.Board for trigger the scope.
2. Playback the linearity portion of the alignment tape.
3. Confirm that the RF envelope is within specification as shown in figure 3-10-20.
4. If the RF envelope exit side is compressed, slightly adjust the P5 upper flange to make a flat envelope and confirm the audio level again.

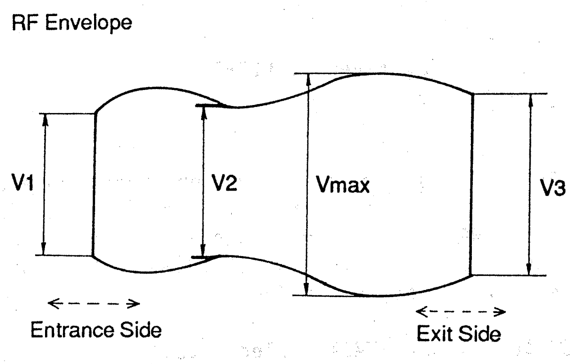

$\frac{V1}{Vmax}, \frac{V3}{Vmax} \geqq 0.85$ $\frac{V2}{Vmax} \geqq 0.92$

Fig. 3-10-20 Envelope Specification

11) TAPE TRAVEL CONFIRMATION

1. After the A/C head adjustment has been completed, observe the lower flange of the P6 post during playback. The bottom edge of the tape should just touch the lower flange of the P6 post. If not, first of all confirm the A/C Head height and tilt.

Note:
When the P5 and P6 post have to be readjusted due to tape curling or wrinkling, always recheck the playback RF envelope, A/C head height, tilt, and azimuth.

2. After confirmation or adjustment of the P6 post, place the unit in the reverse playback mode (SHTL x-1). Make sure that the bottom edge of the tape just touches the lower flange of the P6 post without tape curling. If the tape curling occurs at the buttom flange of the P6 post, adjust the tilt of A/C Head refer to page 3-27. However, if the curling doesn't cancel at the P6 post by adjusting A/C Head tilt, raise both P8 and P9 post up slightly, then raise the P7 post until the tape curling disappears.
3. In the SHTL x1 playback mode, if tape curling is seen at the lower edge of the P8 post, then raise the P9 post as needed.
4. In all modes (SHTL x1 to x32, SHTL x-1 to x-32), tape curling should not occur at the flanges of the P6, P7, P8, and P9 posts. Readjust each post flange as needed if tape curling should occur.
5. Position P11 and P12 so that the tape path is in the middle of these post.

Note:
Make sure that all hex screws on the post are tightened securely.

12) HORIZONTAL POSITION OF A/C HEAD ADJUSTMENT

***Tools Required :**
Eccentric Screwdriver (VFK0357)
Alignment Tape

Note:
Before this adjustment is performed, envelope output, A/C head height and azimuth, and TRACKING FIX ADJUSTMENT should be confirmed or completed. (Refer to TRACKING FIX ADJ. of electrical adjustment)

TRACKING FIX ADJUSTMENT (Electrical)

Board	:	W5 SERVO
Test Point	:	TP3 TP110
Adjustment	:	VR3

<For AU-65/665>

1. Supply a 75% component color bar to COMPONENT 2 INPUT on the rear panel.
2. Set a HEAD SELECT to R/P position and TAPE/EE to EE position.
3. Set a Tracking VR to center detent position.
4. Make a recording and then playback the just recorded portion.
5. Connect a scope CH1 to TP3 and CH2 to TP110.
6. Adjust VR3 so that the T = 0 +/- 100usec as shown in figure 3-10-21.

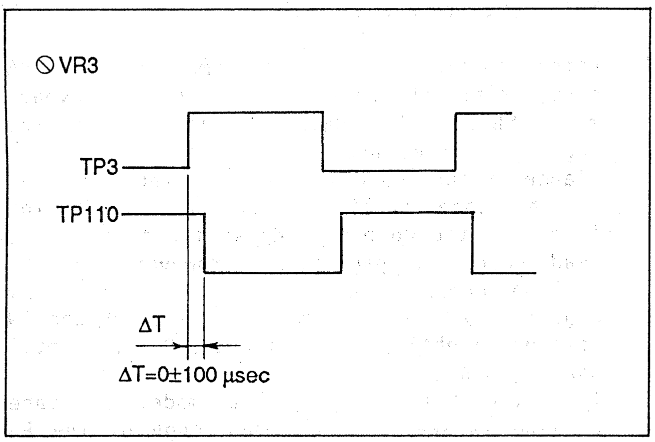

Fig. 3-10-21 Tracking Fix Adj. (AU-65/665)

<For AU-63>

1. Playback the color bar portion of the alignment tape.
2. Disconnect the P10 connector on the AT Power P.C.Board.
3. Connect a scope CH1 to TP3 and CH2 to TP110.
4. Set the sweep range of scope so that the "A" width becomes 9 lines.
5. Adjust VR3 so that the T = 3 +/- 0.1 lines as shown in figure 3-10-22.
6. Connect the P10 connector to the AT Power P.C.Board.

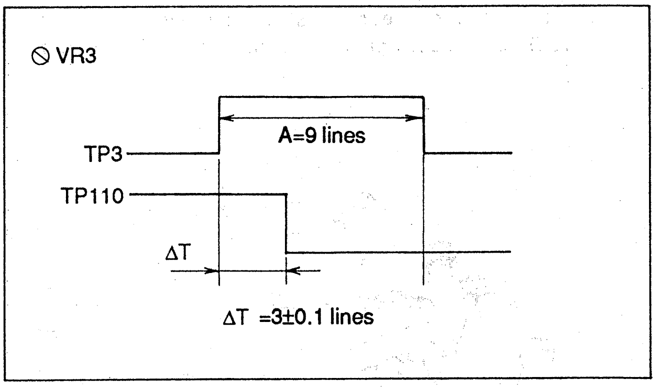

Fig. 3-10-22 Tracking Fix Adj. (AU-63)

<For AU-62>

1. Set the Tracking VR to center detent position.
2. Playback the color bar portion of alignment tape.
3. Connect the scope CH1 to TP3 and CH2 to TP110.
4. Adjust VR3 so that the T = 0 +/- 100usec as shown in figure 3-10-23.

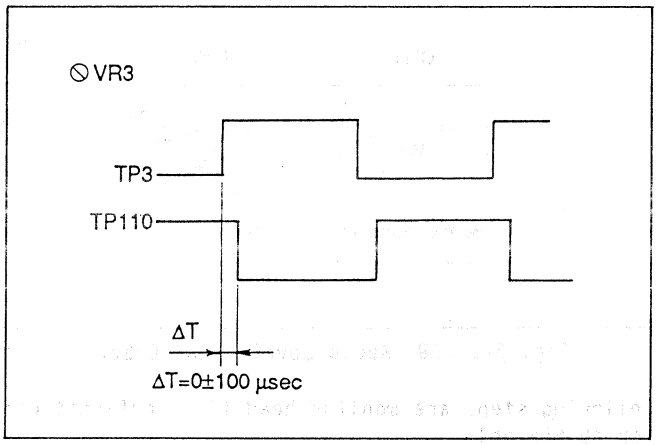

Fig. 3-10-23 Tracking Fix Adj. (AU-62)

HORIZONTAL POSITION ADJUSTMENT (Mechanical)

1. Insert the alignment tape, and playback the Field Skip portion.
2. Set the tracking control on the front panel to the center detent position.
3. Set the HEAD SELECT to R/P for AU-665 or disconnect the P10 on the AT POWER P.C.Board for AU-63.
4. Connect the scope CH1 to TP301 on the W3 MODULATION & DEMODULATION P.C.Board and CH2 to TP301 on the W6 AUDIO P.C.Board.
5. Confirm that the skip portion is in the same position.
6. If not, loosen the 2 screws (F) and (G) a 1/4 of a turn and insert the eccentric screw driver into hole (H) as shown in figure 3-10-24.
7. Roughly adjust the A/C head assembly by turning the eccentric screwdriver so that the skip portion is in the same position as shown in figure 3-10-25.
8. If the skip portion is shifted causing by CTL head incorrect position, readjust the A/C head. (After that, audio level confirmation is necessary.)

9. Playback the linearity portion of the alignment tape.
10. Confirm that the envelope level is maximized at Tracking VR detent position.
11. If it is not, slightly adjust the A/C Head assembly by turning the eccentric screwdriver so that the Y RF envelope is maximized.
12. Alternately tighten the 2 screws (F) and (G) until both screws are tight.
13. Connect the P10 to AT POWER P.C.Board for AU-63.

Note:
After this adjustment, confirm the audio height tilt and azimuth.

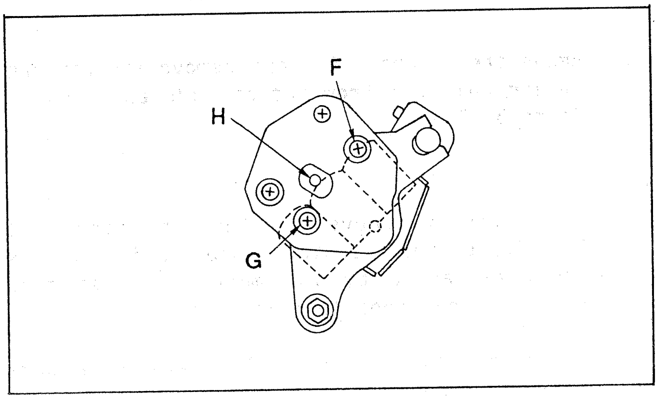

Fig. 3-10-24 Horizontal Position

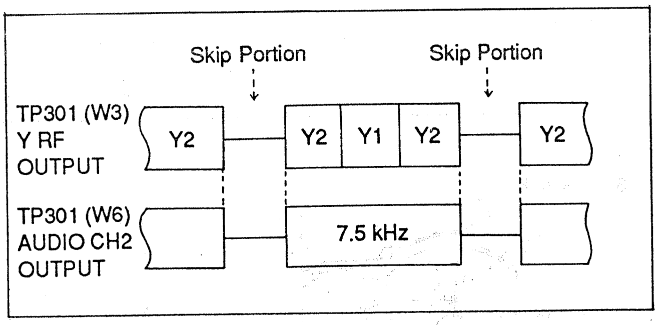
Skip Portion
Skip Portion
TP301 (W3)
Y RF
OUTPUT
Y2
Y2
Y1
Y2
Y2
TP301 (W6)
AUDIO CH2
OUTPUT
7.5 kHz

Fig. 3-10-25 Skip Portion

3-10-4. Electrical adjustment

After replacing, perform the following electrical adjustment.

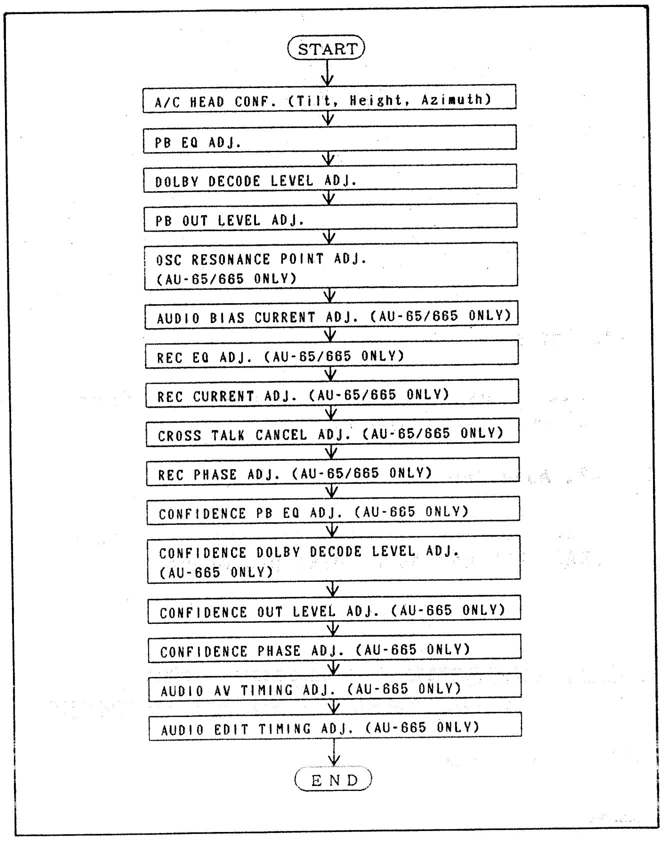
START
A/C HEAD CONF. (Tilt, Height, Azimuth)
PB EQ ADJ.
DOLBY DECODE LEVEL ADJ.
PB OUT LEVEL ADJ.
OSC RESONANCE POINT ADJ. (AU-65/665 ONLY)
AUDIO BIAS CURRENT ADJ. (AU-65/665 ONLY)
REC EQ ADJ. (AU-65/665 ONLY)
REC CURRENT ADJ. (AU-65/665 ONLY)
CROSS TALK CANCEL ADJ. (AU-65/665 ONLY)
REC PHASE ADJ. (AU-65/665 ONLY)
CONFIDENCE PB EQ ADJ. (AU-665 ONLY)
CONFIDENCE DOLBY DECODE LEVEL ADJ. (AU-665 ONLY)
CONFIDENCE OUT LEVEL ADJ. (AU-665 ONLY)
CONFIDENCE PHASE ADJ. (AU-665 ONLY)
AUDIO AV TIMING ADJ. (AU-665 ONLY)
AUDIO EDIT TIMING ADJ. (AU-665 ONLY)
END

3-11. FULL ERASE HEAD REPLACEMENT AND ADJUSTMENT

3-11-1. Replacement

Removal

1. Unsolder 2 leads on the erase head as shown in figure 3-11-1. (for AU-65/665)
2. Remove the 2 screws (A) and remove the full erase head assembly. (Fig. 3-11-1)
3. Remove the screw (B) and remove the head.

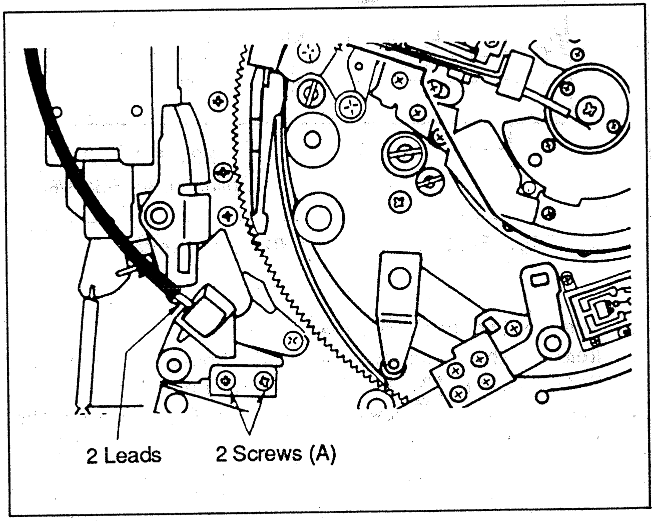
2 Leads
2 Screws (A)

Fig. 3-11-1 Full Erase Unit

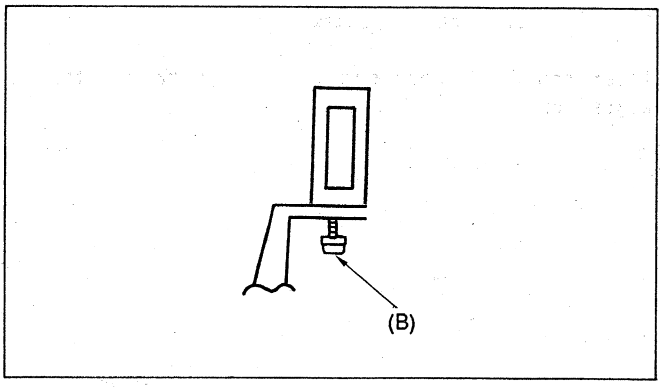

Fig. 3-11-2 Full Erase Unit

Installation

1. After installing the head, perform the following adjustments.

3-11-2. Adjustment

1. Check and adjustments according to the FULL ERASE CURRENT ADJUSTMENT procedure.

3-12. CAPSTAN HOUSING UNIT REPLACEMENT AND ADJUSTMENT

3-12-1. Replacement

Removal

1. Remove the B1 SYSTEM CONTROL and B2 TCG/TCR (option for AU-65/63/62) P.C.Board from front-sub panel as shown below.

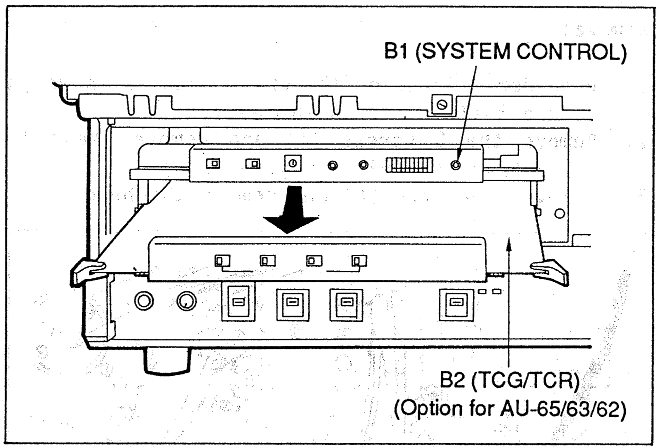

Fig. 3-12-1. B1 and B2 unit Removal

2. Remove the bottom panel.
3. Remove the 2 screws (A) and remove the Capstan Motor Cover (B) as shown in figure 3-12-2.
4. Remove the 3 screws (C) and pull to remove the rotor (E).

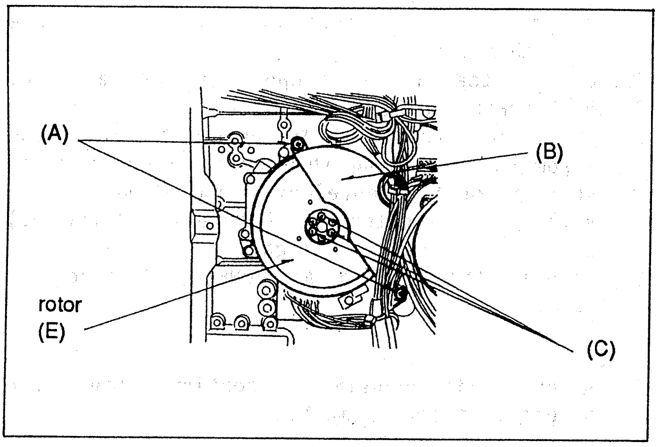

Fig. 3-12-2 Capstan Motor

5. Remove the 3 screws (F) and remove the Capstan Housing unit (G) from bottom side as shown in figure 3-12-3.

Note:
How to easily remove the Capstan rotor unit (E). Since the Capstan rotor unit (E) is hardly attracted by the magnet, please make the following steps to remove it.

1. Prepare the long size 3 screws as a same type's screw (C).
2. Install the long size 3 screws to screw (C) holes and the Capstan rotor unit (E) by tightening the 3 screws.
3. Then remove the Capstan rotor unit (E).

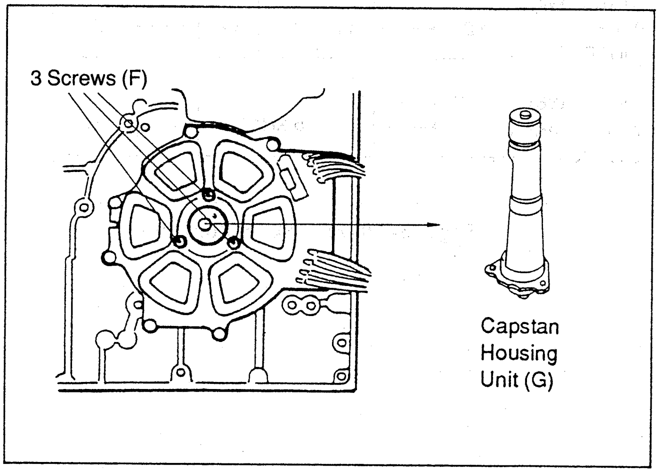

Fig. 3-12-3 Capstan Housing Unit

Installation

1. Reverse the previous steps in reverse order.

3-12-2. Adjustment

1. Check adjustments according to the TRACKING FIX ADJUSTMENT procedure.

3-13. PINCH ROLLER SOLENOID REPLACEMENT AND ADJUSTMENT

3-13-1. Replacement

Removal

1. Remove the bottom panel and disconnect the connector (P405) on the MECH. INTERFACE CIRCUIT P.C.Board.

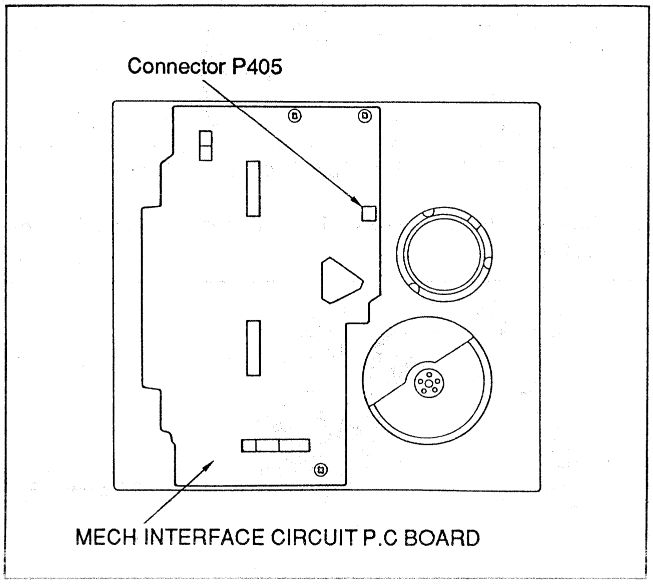
Connector P405
MECH INTERFACE CIRCUIT P.C BOARD

Fig. 3-13-1 Location of Connector P405

2. Remove the 3 screws (A) as shown in figure 3-13-2.
3. Remove the pinch solenoid.

Installation

1. Follow the removal steps in reverse order.

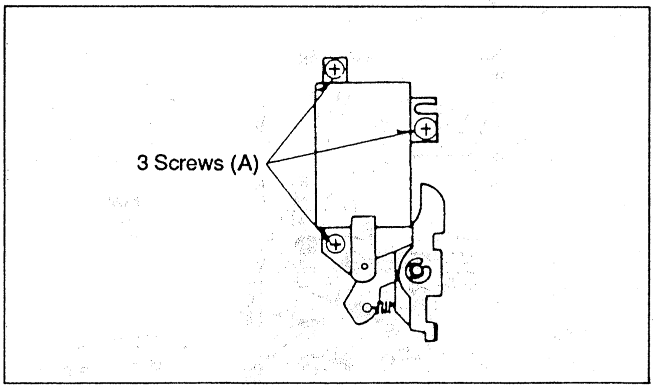

Fig. 3-13-2 Pinch Roller Solenoid

3-13-2. Adjustment

***Tools Required:**

Eccentric Screwdriver (VFK0358)
Dummy Plug 1 (VFK0361)
Fan Type Tension Gauge (VFK66)

1. Remove the front loading (CARRIAGE) unit and connect the Dummy Plug 1 (VFK0361) into to P406.
2. Play back a tape and measure the clearance (B) as indicated in figure 3-13-3. Verify that it is 1.3mm +/-0.2mm.
3. If not, loosen the 3 screws (A) (figure 3-13-3) and insert the eccentric screwdriver into hole (C).
4. Adjust the Pinch roller solenoid position with the eccentric screwdriver so that the clearance (B) is 1.3mm (+/-0.2mm).
5. Tighten the 3 screws (D).
6. Insert a work cassette and play back the tape.
7. Insert a 1.2mm thickness gauge to clearance (B).
8. Place the fan type tension gauge so that it's tip contacts the position (A) as shown in figure 3-13-3.
9. Push the tension gauge in the direction indicated by arrow Y in figure 3-13-3.
10. Confirm that the placed thickness gauge is dropped when the tension gauge reading is 1900 +/-100 grams.
11. If it is not change the position of the spring as shown in figure 3-13-3.

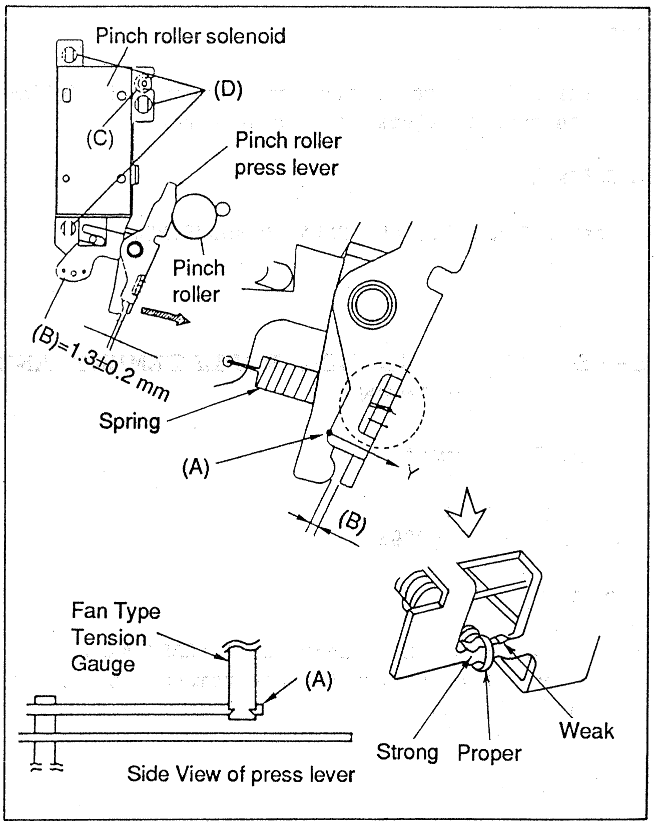
Pinch roller solenoid
(D)
(C)
Pinch roller press lever
Pinch roller
(B)=1.3±0.2 mm
Spring
(A)
Y
(B)
Fan Type Tension Gauge
(A)
Side View of press lever
Strong
Proper
Weak

Fig. 3-13-3 Pinch Roller

3-14. PINCH PRESS LEVER REPLACEMENT AND ADJUSTMENT

REMOVAL

1. Remove the pinch solenoid (refer to pinch solenoid replacement section).
2. Remove the spring as shown in figure 3-14-1.
3. Remove the E-ring and washer as shown in figure 3-14-1.
4. Remove the Pinch Press Lever.

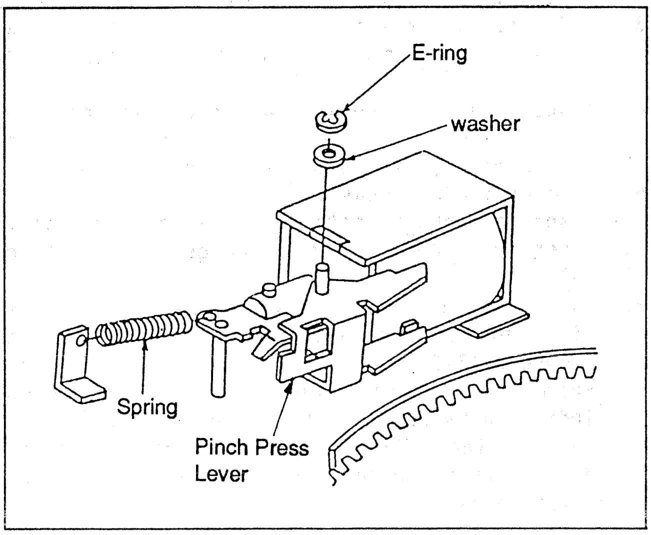
E-ring
washer
Spring
Pinch Press Lever

Fig. 3-14-1 Pinch Press Lever

INSTALLATION

1. Install the new Pinch Press Lever and follow the removal steps in reverse order.

ADJUSTMENT

Refer to PINCH ROLLER SOLENOID ADJUSTMENT

3-15. TIMER ROLLER REPLACEMENT AND ADJUSTMENT

3-15-1. Replacement

***Tool required :**
Post Driver (VFK0293)

Removal

1. Remove the front loading unit (CARRIAGE).
2. Remove the 4 screws (A) and remove Sub-loading cover assembly.

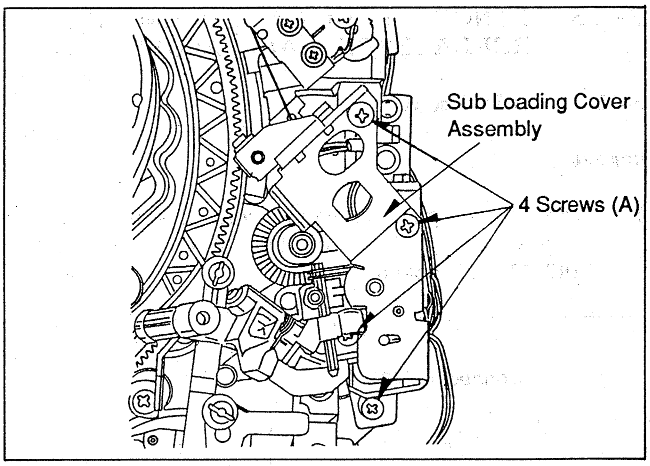
Sub Loading Cover Assembly
4 Screws (A)

Fig. 3-15-1 Sub-loading Cover Removal

3. Remove the 3 screws (B) and remove Turn Roller Lifter

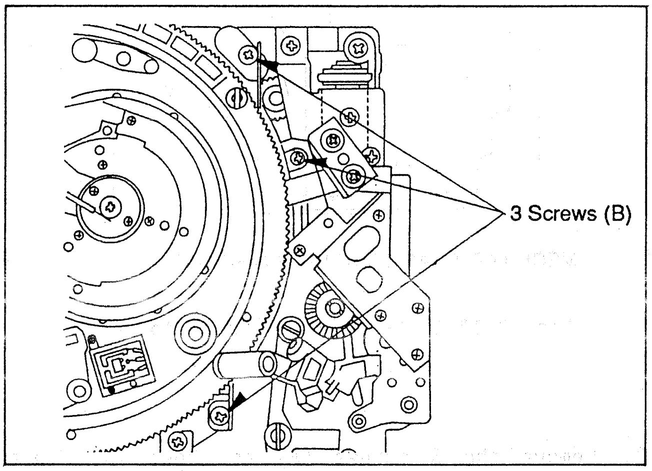

Fig. 3-15-2 Turn Roller Lifter

4. Remove the 2 screws (C) and remove TR Sensor P.C.Board.

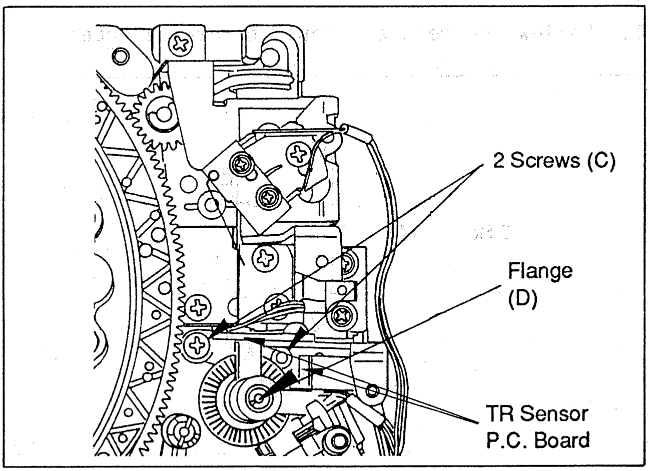
2 Screws (C)
Flange (D)
TR Sensor P.C. Board

Fig. 3-15-3 Timer Roller

5. Loosen the flange (D) and remove (Do not loosen the Hex Screw) then remove the bearing (E) and collar (F).
(Use a tweezer so that it is easy to remove)
6. Remove the timer roller unit.
After removing, remove the bearing (G).

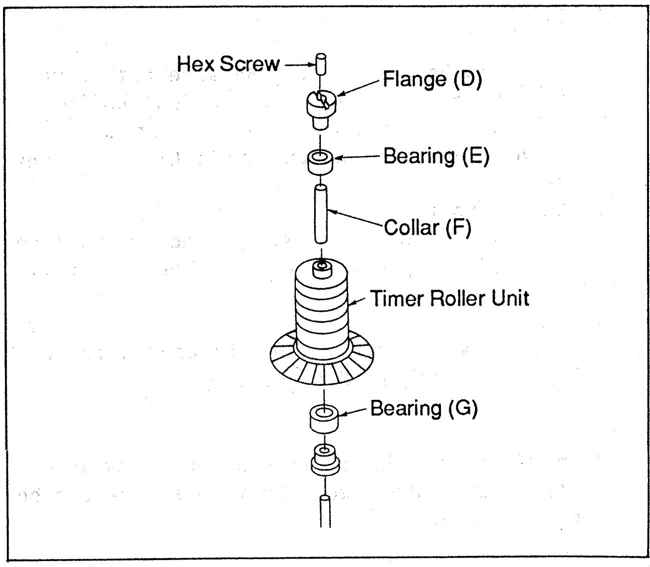

Fig. 3-15-4 Construction of TR

Installation

1. Insert the bearing (G) before install the Timer Roller unit.
2. Install the Timer Roller unit, after that, insert the collar (F) and bearing (E) to the Timer Roller unit.
3. Insert the flange (E) to the Timer Roller unit. (Do not tighten the hex screw)
4. After the installation, perform the following adjustments.

3-15-2. Adjustment

1) Timer Roller height Adjustment

***Tool Required:**
Post Driver (VFK0293)

1. Play back the MPL90 tape to make sure the tape edges do not come into the grooves on the timer roller in any mode.
2. If the above requirement is not satisfied, loosen Hex-Screw (L) and turn flange (K) for height adjustment.
3. Finally, be sure to tighten up Hex-Screw (L).

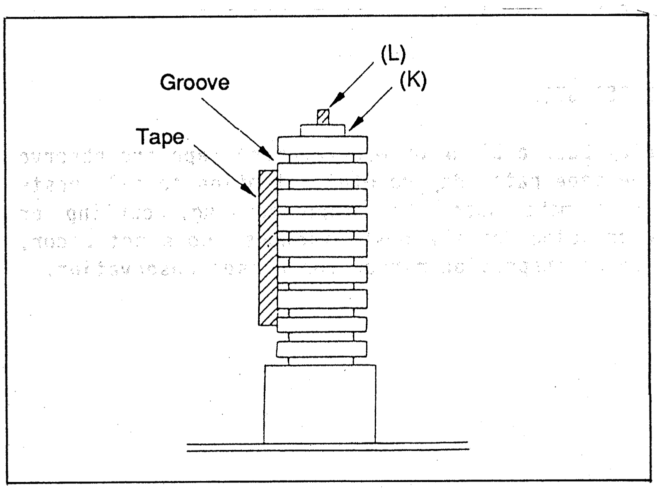

Fig. 3-15-3 Timer Roller Height

2) Timer Roller Position Adjustment

***Tools required:**
Eccentric Screwdriver (VFK0358)
Dual Channel Oscilloscope

1. Connect the scope CH1 to TP202 (W5) and CH2 to TP201 (W5) on the servo P.C.B.
2. Playback the color bar portion of the alignment tape.
3. Loosen the 2 screws (C), as shown in figure 3-15-4.
4. Insert the eccentric screwdriver into hole (D) (figure 3-15-4).
5. Turn the eccentric screwdriver until the two waveforms are 90 degrees apart A=B +/- 10% as shown in figure 3-15-5.
6. Tighten the 2 screws (C).

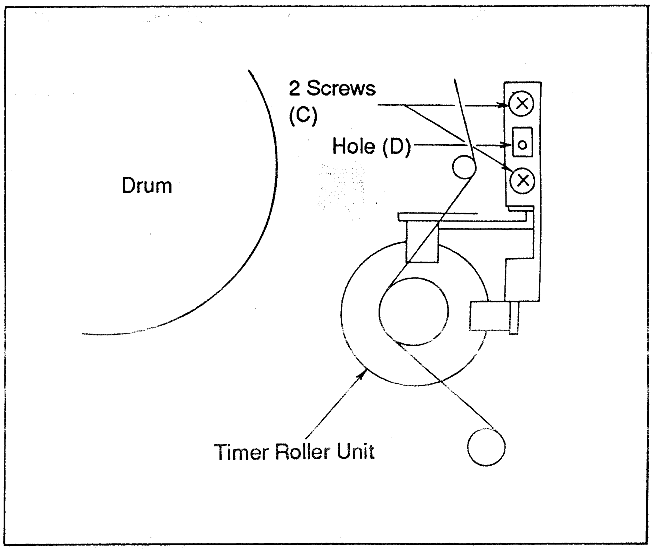

Fig. 3-15-4 Timer Roller

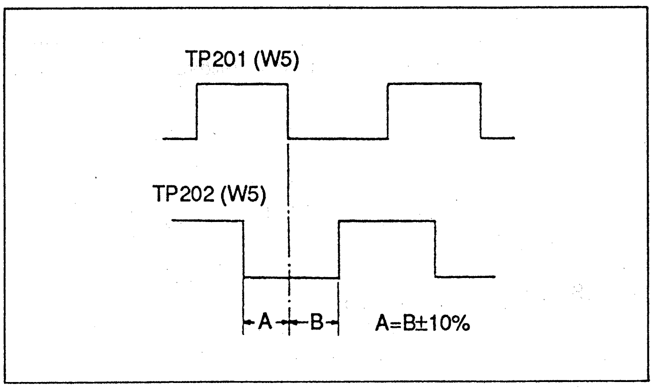

Fig. 3-15-5 Timer Roller Phase

3-16. POST ROLLER UNIT REPLACEMENT AND ADJUSTMENT

1) POST ROLLER UNIT REPLACEMENT

Note :

When you replace a Post roller unit, install one at a time, and optimize its position. (Before replacing any more)

REMOVAL

1. Remove the front loading unit.
2. Only turn the upper flange counterclockwise and remove the upper flange of the post. (using post driver outer sleeve) Do not loose the hex screw when the upper flange is removed as shown in figure 3-16-1.
3. Remove the post roller unit (B) (Be sure not to lose the post spring (D) as shown in figure 3-16-2.

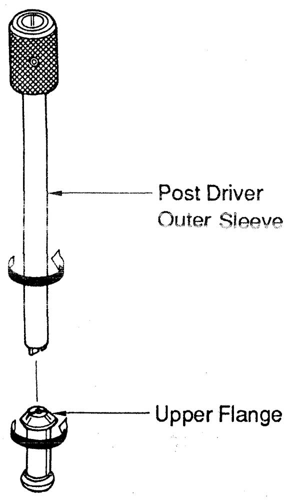

Fig. 3-16-1 Flange Removal

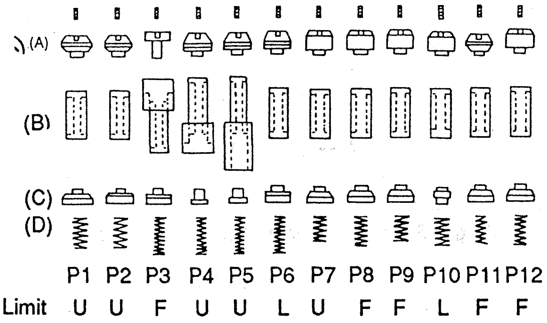
(A)
(B)
(C)
(D)
P1 P2 P3 P4 P5 P6 P7 P8 P9 P10 P11 P12
Limit U U F U U L U F F L F F

Fig. 3-16-2 Each Post Rollers

INSTALLATION

1. Install new Post Roller. (Be sure not to make a damaging or scratching to the Post Roller)
2. Install the upper flange (A) to the original position. (Do not loosen or tighten the hex screw)
3. Clean the post.
4. Play back the blank cassette and check tape travel. Then adjust the RF envelope linearity.

Note 1 :

P3 and P4 will have to be replaced together. (They can be adjusted together)

Note 2 :

When replacing the posts, do not remove all posts at the same time. (Only P3 and P4 can be replaced together)

Note 3 :

In order to ease linearity adjustment, always check the RF envelope after replaced each post.

2) RF ENVELOPE LINEARITY ADJUSTMENT

***Tools Required :**

Alignment tape
Post height fixture (VFK0363)
Mechanical Neutral Adjustment Plate (VFK0352)
Post Driver (VFK0293)
Hex Wrench (1.27mm)

GENERAL INSTRUCTIONS

The objectives of this adjustment are follows.

1. To insure smooth tape travel through the entire tape path without tape damage.
2. To obtain good envelope linearity of tape among all machines.

IMPORTANT NOTICE :

When adjust the envelope linearity of AU-63, make sure that the connector P10 on the AT POWER P.C.Board is disconnected to stop the Auto Tracking function.

FIRST STEP

Play back a blank or pre-recorded tape and observe the tape path. Pay careful attention to all posts and make sure that tape curling, curling or overriding on the post flanges does not occur, use an inspection mirror for closer observation.

SECOND STEP

If no tape damage occurs, then the alignment tape may be played back, and the RF envelope checked with an oscilloscope. The RF envelope should be flat. Envelope drop off is most likely to occur at the entrance and exit point (Head Switching point) of tape travel around the drum. This is shown in figure 3-16-3 and careful attention should be paid to these points.
Figure 3-16-4 shows the recommended sequence of adjustments in flow chart form.

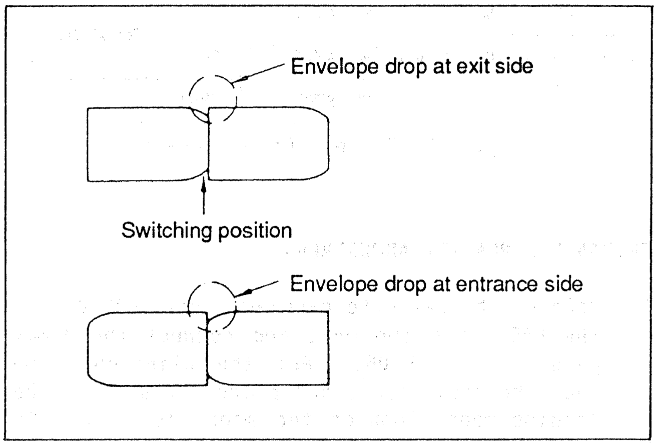
Envelope drop at exit side
Switching position
Envelope drop at entrance side

Fig. 3-16-3 Envelope Output

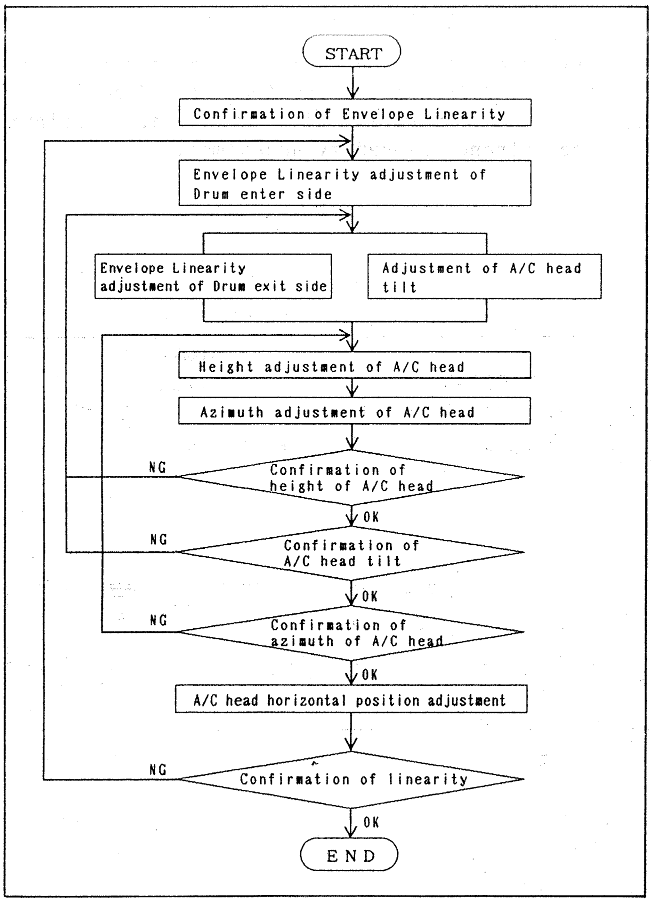
START
Confirmation of Envelope Linearity
Envelope Linearity adjustment of Drum enter side
Envelope Linearity adjustment of Drum exit side
Adjustment of A/C head tilt
Height adjustment of A/C head
Azimuth adjustment of A/C head
NG
Confirmation of height of A/C head
OK
NG
Confirmation of A/C head tilt
OK
NG
Confirmation of azimuth of A/C head
OK
A/C head horizontal position adjustment
NG
Confirmation of linearity
OK
END

Fig. 3-16-4 Flow Chart

POST CONSTRUCTION

Figure 3-16-5 shows post construction.
The hex (set) screw in the center of the top of each post should be loosened with slightly before adjusting each post. When adjusting the post height, turn upper flange only. After making a flat envelope, hold a upper flange position and tighten up the hex screw. At that time upper flange is also tightened.
After setting the post height, make sure that no change in RF envelope when the hex screw is tightened.

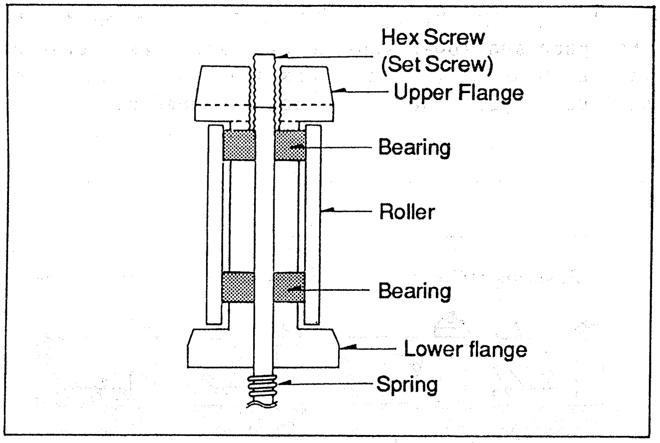
Hex Screw
(Set Screw)
Upper Flange
Bearing
Roller
Bearing
Lower flange
Spring

Fig. 3-16-5 Post Construction

Basically, Post Roller is positioned to original height after replacing (as long as, the hex screw is not misadjusted). However, in order to avoid the tape damage in Loading and Unloading mode, confirm that the height of the P1, P2, P11 and P12 posts are set to specified height, using MECH. plate and height fixture (VFK,363).

In order to do this, remove the cassette carriage unit, and install the mechanical neutral adjustment plate over the reel tables. Then place the post height fixture (VFK0363) on the Mechanical Neutral Adjustment Plate as shown in figure 3-16-6. (thumbscrews of neutral plate can be removed as needed) The upper and lower flanges of the P1, P2, P11 and P12 post should be touch the upper and lower surface of fixture as shown in figure 3-16-6. If these posts do not touch the surface, adjust the post height as needed.

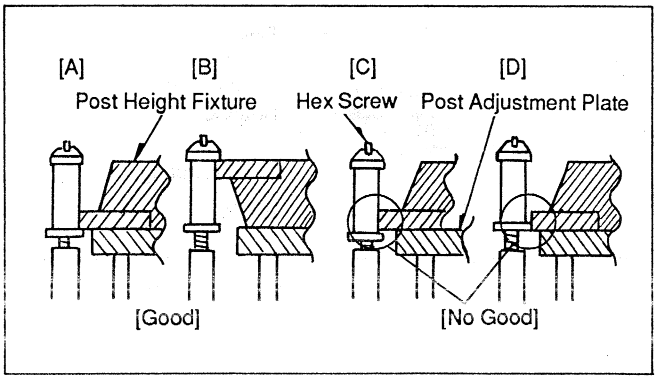

Fig. 3-16-6 Post Height Preadjustment

When adjust the envelope linearity, use the following test points as shown in figure 3-16-8.

Output Signal	P.C.Board	Test Point	Remarks
Y RF (R/P Head)	W3 (MOD/DEMOD)	TP301	also available WFM OUT for AU-665 only
C RF (R/P Head)	W3 (MOD/DEMOD)	TP701	
Head Switching	W5 (SERVO)	TP7	-------
Linear Audio CH1 (R/P Head)	W6 (AUDIO)	TP101	also available AUDIO OUT
Linear Audio CH2 (R/P Head)	W6 (AUDIO)	TP301	
Linear Audio CH1 (Monitor Head)	W6 (AUDIO)	TP271	for AU-665 only
Linear Audio CH2 (Monitor Head)	W6 (AUDIO)	TP471	
CTL Pulse	W5 (SERVO)	TP109	-------

Fig. 3-16-8 Test Points Chart

ENTRANCE LINEARITY ADJUSTMENT

1. Remove the cassette carriage unit, disconnect the P406 from the unit and connect the dummy plug (1) to P406. Put the alignment tape over the reel table and place the unit in the loading mode. Connect the scope to Y or C RF out (refer to Test Points Chart). Use TP7 on the SERVO P.C.Board (W5) to trigger the scope.
2. Playback the linearity portion of the alignment tape.
3. In order to avoid the tape damage, loosen the hex screw of P3 and P4 post so that the flange of P3 and P4 post is set free. (no limit).
4. In above condition, it possible to perform the Entrance Linearity adjustment.

Figure 3-16-7 shows tape path limit for each post.

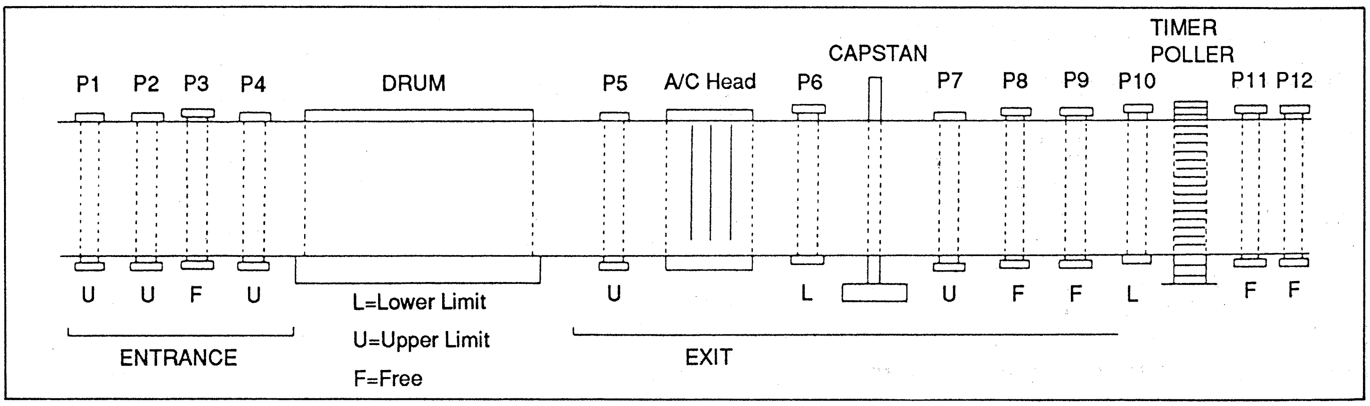

Fig. 3-16-7 Tape Path Limit

P1 POST ADJUSTMENT
LIMIT : UPPER LIMIT

1. Loosen the hex screw and adjust the upper flange so that the P1 post is set to the upper limit.
2. Place the unit in the loading mode and turn power off when the tape is half loaded as shown in figure 3-16-9.
3. Confirm that the tape is not damaged at P1 post. If tape is damaged by P1 post readjust the upper flange of P1 post.
4. Tighten the hex screw.

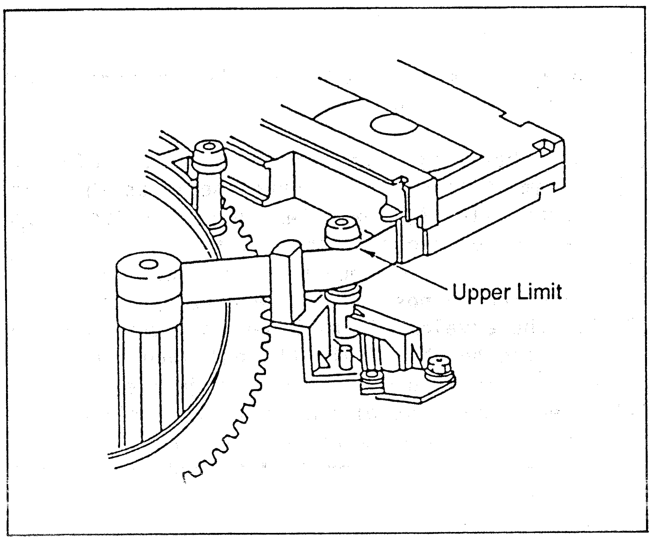

Fig. 3-16-9 Part Way of Loaded

P2 POST ADJUSTMENT
LIMIT : UPPER LIMIT

P2 Post Roller and Upper Flange Replacement

Note:

In order to avoid the tape damage, set the P3 and P4 to free (no limit) during this section.

Post Roller Replacement

1. Remove the upper flange (do not loose the hex screw) and remove the P2 post roller.
2. Install the new P2 post roller and reinstall the upper flange (do not tighten the hex screw).

Upper Flange Replacement

1. Turn the upper flange counterclockwise and remove it.
2. Remove the hex screw from the removed upper flange.
3. Reinstall the hex screw to new upper flange and set nearly original position.
4. Install the new upper flange.

P2 Post Height Adjustment

1. Playback the work cassette on which is recorded a color bar signal and observe that the P2 post upper edge has no tape damage.
2. Observe that the entrance side of Y or C RF envelope is between 85 - 115% as shown in figure 3-16-10.
3. If it is not, slightly adjust the P2 post upper flange so that the Y or C RF envelope meets specification.

Note :

Basically, RF envelope changed parallel by adjusting the Tracking VR on the front panel as shown in figure 3-16-11. If in case of B. or C, readjust the P2 post height.

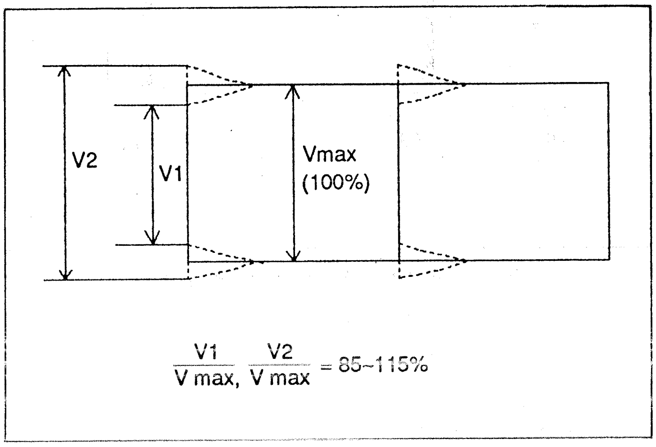

Fig. 3-16-10 Entrance Side Spec

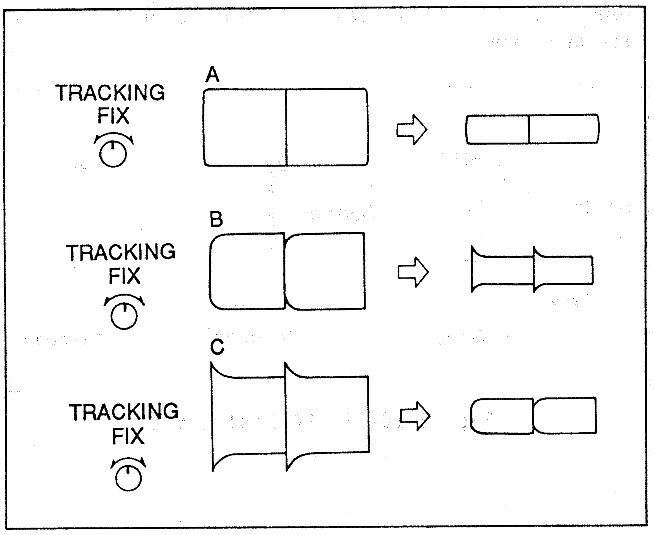

Fig. 3-16-11 Entrance Side

P3 POST ADJUSTMENT
LIMIT : FREE

1. Turn the P3 upper flange to counterclockwise so that the tape lower edge touches the P3 lower flange. (At that time, verify that the envelope entrance side is not changing.)
2. Turn the upper flange of P3 post to 3/4 clockwise (0.3mm down) as shown in figure 3-16-12.

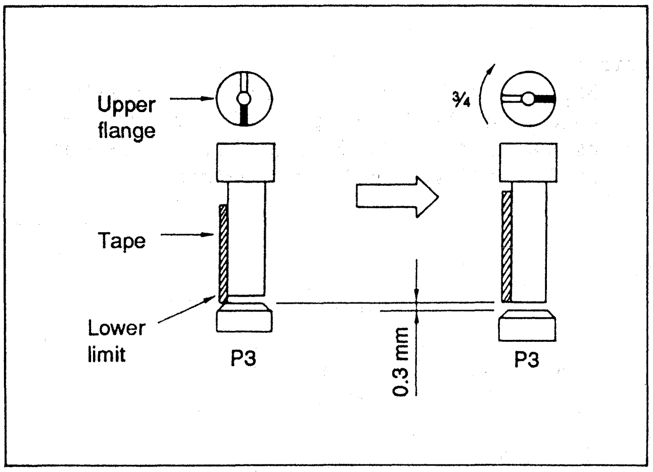

Fig. 3-16-12 P3 Post Height Adj.

P4 POST ADJUSTMENT
LIMIT : UPPER LIMIT

Reposition the P4 post so that it's upper flange just touches the top edge of the tape as shown in figure 3-16-13. Tighten the hex screw to lock this adjustment.

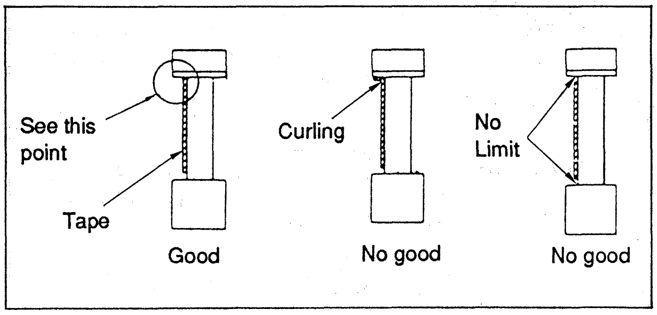

Fig. 3-16-13 P4 Post Limit

EXIT LINEARITY ADJUSTMENT

Note:
P5, P6 and A/C head affect the RF envelope and the audio level. They must be adjusted together.

P5 POST ADJUSTMENT
LIMIT : UPPER LIMIT

1. The oscilloscope setting is the same as for the entrance linearity adjustment.
2. First play back a blank or pre-recorded tape in the SHTL X1 and SHTL X-1 mode and observe the tape at the P5 post. Make sure that no tape curling occurs at the P5 post, Also the upper edge of the tape should just touch the top flange of the P5 post. Adjust the P5 post as necessary.
3. P5 post height adjustment is explained below. (Observe the Y or C RF envelope).

Note:
Lower drum rabbit guide is reference of interchange adjustment.

(1) Play back the linearity portion of the alignment tape. If the envelope is as shown in figure 3-16-14, lower the P5 post slightly so that the envelope becomes flat.
(2) If the envelope appears as in figure 3-16-15, raise the P5 post until the envelope is flat.
(3) If the envelope is as shown in figure 3-16-16 both the height of the P5 post, and the tilt of the A/C head will require adjustment.
(4) After adjustment of the P5 post, confirm that the audio level is maximum and audio azimuth is same phase. (Refer to A/C Head Adjustment Section)

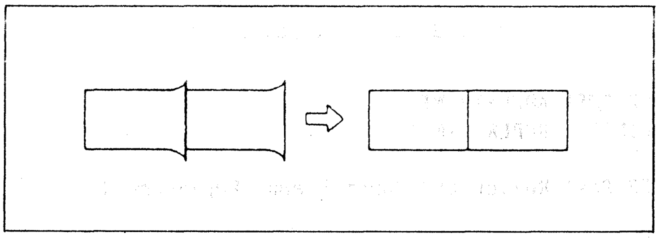

Fig. 3-16-14 Exit Side Envelope (1)

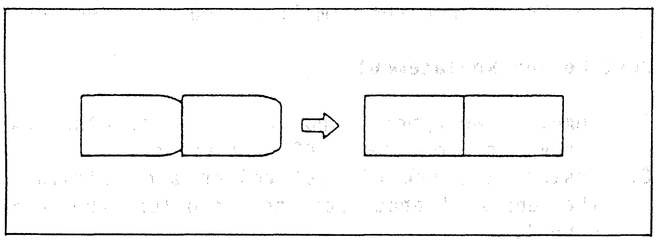

Fig. 3-16-15 Exit Side Envelope (2)

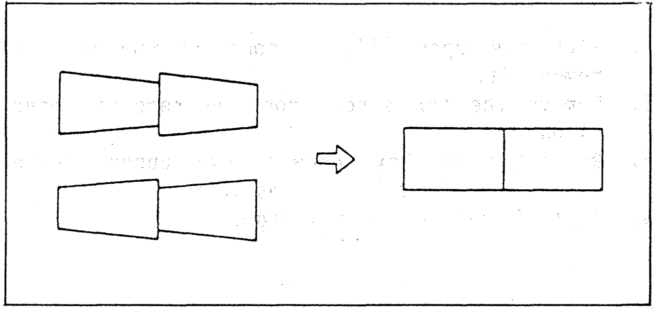

Fig. 3-16-16 Exit Side Envelope (3)

P6 POST ADJUSTMENT
LIMIT : LOWER LIMIT

Note :
When replace the P6 Post Roller, always check the audio level and azimuth.

1. Turn upper flange counterclockwise so that the lower flange touches the tape lower edge.
2. Confirm that tape curling or tape damage does not occur at the tape's lower edge in the SHTL or VAR X1 and SHTL or VAR X-1 mode as shown in figure 3-16-17.
3. If tape curling or tape damage occurs at the tape's lower edge, waving of RF envelope may occur.
4. Confirm that the audio level is maximum and azimuth is same phase. (refer to A/C Head Adjustment section)

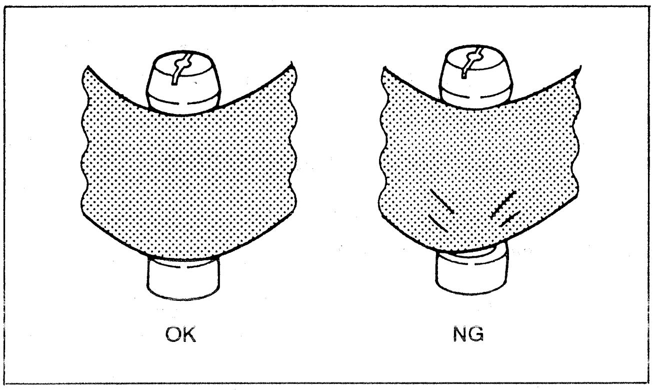

Fig. 3-16-17 Tape Path on P6 Post

P7 POST ADJUSTMENT
LIMIT : UPPER LIMIT

Note :
P7 Post is replaced with Turn Roller Arm Unit together which have already adjusted for P7 post tilt. Therefore, do not adjust the P7 post tilt when replacing.

1. Place the unit in the SHTL or VAR x 1 and SHTL or VAR x -1 mode and confirm that the tape curling or tape damaging does not occur at tape upper edge as shown in figure 3-16-18.

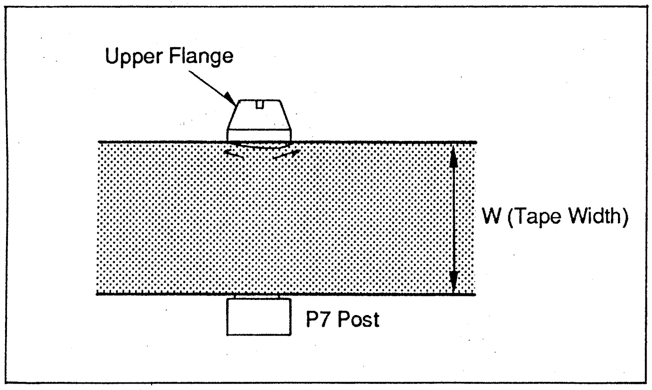

Fig. 3-16-18 P7 Tape Travel

2. If too much upper limit is applied, adjust upper flange with slightly so that the upper flange just touches the tape upper edge.
3. Confirm that the tape curling or tape damaging does not occur at P6 post in SHTL or VAR x 1 and SHTL or VAR x -1 mode.

P8 POST ADJUSTMENT
LIMIT : FREE

1. Confirm that the tape curling or tape curling does not occur at the P6 post lower flange in SHTL or VAR x 1 mode.
2. If tape curling or tape curling occur at the P6 lower flange, adjust P8 upper flange so that the P8 lower flange touches the tape lower edge in SHTL or VAR x 1 mode.

P9 POST ADJUSTMENT
LIMIT : FREE

1. Place the unit in the SHTL or VAR x 2 to SHTL or VAR x -1 mode alternately.
2. Confirm that the tape curling or tape curling does not occur at P8 or P10 flange in any SHTL or VAR mode.
3. If tape deforming or tape curling occur, adjust upper flange so that the tape curling or tape curling disappears at P8 or P10 post in any SHTL or VAR mode.

P10 POST ADJUSTMENT
LIMIT : LOWER LIMIT

Refer to IP BASE UNIT REPLACEMENT

P11 POST ADJUSTMENT
LIMIT : FREE

1. Adjust upper flange so that the tape curling or tape curling disappears in SHTL or VAR x 1 to SHTL or VAR x -1 mode and confirm that the tape on the timer roller does not fall the gutter of timer roller.

P12 POST ADJUSTMENT
LIMIT : FREE

1. Adjust upper flange so that the tape curling or tape curling disappears in SHTL x 1 to SHTL x 4 mode.
2. During loading/unloading, turn power off when the P12 post touches the tape and confirm that the tape is not damaged.
3. If the tape is damaged, readjust the P12 post upper flange.

3-17. IP BASE UNIT (with P10 Post) REPLACEMENT

3-17-1. Replacement

Removal

1. Remove the E-ring (B) and washer as shown in figure 3-17-1.
2. Remove the IP Base Unit (A). (Do not lose spring and washers.)

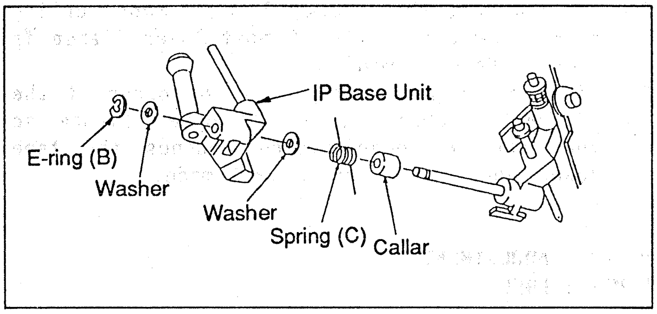
IP Base Unit
E-ring (B)
Washer
Washer
Spring (C)
Callar

Fig. 3-17-1 IP Base Unit Removal

Installation

1. Hang on the spring (C) to the IP Base Unit and place the E-ring (B) and washer to original installation.

3-17-2. Adjustment

P10 Post Tilt Adjustment.

***Tool Required :**
Hex Wrench (2.4mm) and (1.5mm)

1. Loosen the 2 hex screw (A) and hex screw (B) as shown in figure 3-17-2.
2. Insert a cassette and place the unit in the FF mode.
3. Confirm the tape movement at the Timer Roller.
4. If the tape movement is upward, turn hex screw (B) clockwise.
5. If the tape movement is downward, turn hex screw (B) counterclockwise.
6. Confirm that the tape on the Timer Roller does not fall the groove of Timer Roller.
7. Tighten 2 hex screw (A).

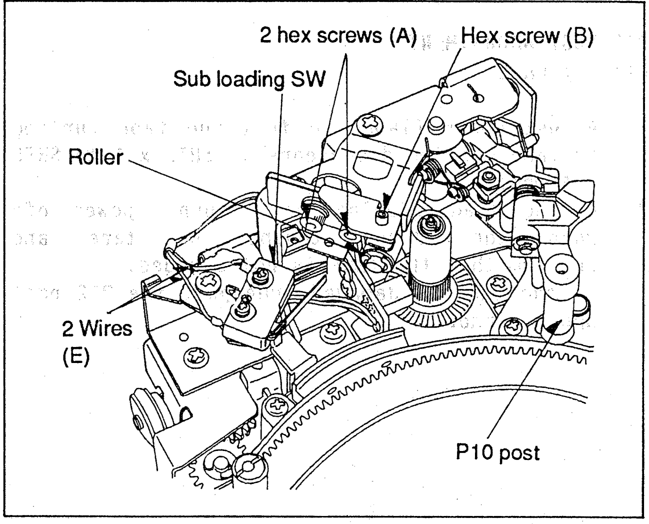
2 hex screws (A)
Hex screw (B)
Sub loading SW
Roller
2 Wires (E)
P10 post

Fig. 3-17-2 Tilt Adjustment

Note :
When the hex screw (B) is turned counterclockwise, the roller does not come up.
In that case, press up the roller using finger as shown in figure 3-17-3.
When tighten 2 hex screw (A), hold the position of IP Base Unit using finger as shown in figure 3-17-3.

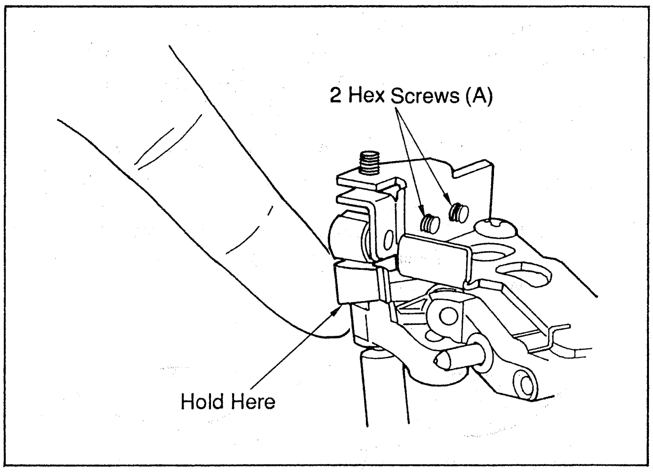
2 Hex Screws (A)
Hold Here

Fig. 3-17-3 IP Base Holding

P10 Post Height Adjustment

1. Adjust the upper flange with slightly so that the P10 post is set to lower limit in PLAY mode.
2. Place the unit in SHTL x 32 to SHTL x -32 alternately and confirm that the tape on the timer roller does not fall the groove of timer roller in any modes as shown in figure 3-17-4.

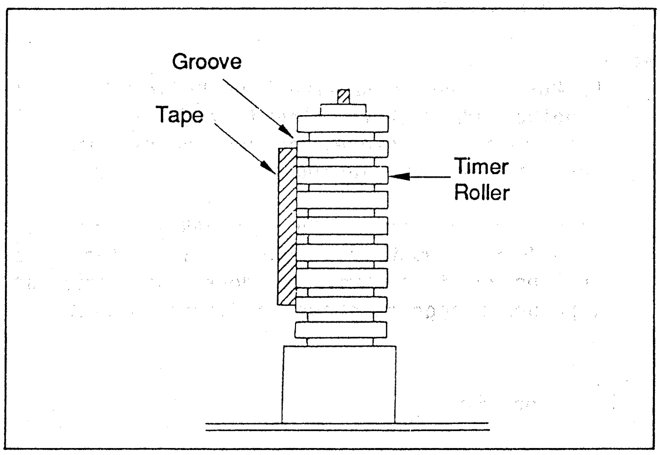
Groove
Tape
Timer Roller

Fig. 3-17-4 Timer Roller

3-18. SUB LOADING SWITCH REPLACEMENT AND ADJUSTMENT

3-18-1. Replacement

Removal

1. Unscrew the 2 screws (C) and remove the Sub Loading Switch (Micro switch) as shown in figure 3-18-1.
2. Unsolder the 2 wires (E) on the Sub Loading Switch (Micro switch) as shown in figure 3-18-1.

Installation

1. Install the new Sub Loading Switch (Micro switch) and follow the removal steps in reverse order.

3-18-2. Adjustment

***Tool Required:**
Fine Adj. Driver (VFK0446)

1. Turn Power on. Insert a cassette and wait until tape loading completes.
2. Make sure that when the tape loading is completed, that the sub loading switch has activated. (Check that Load speed increases after switch closes).
3. If the switch does not active, loosen the screw (F), insert the Fine Adj. Driver into hole (D), and adjust the position of the switch as needed. (figure 3-18-1).

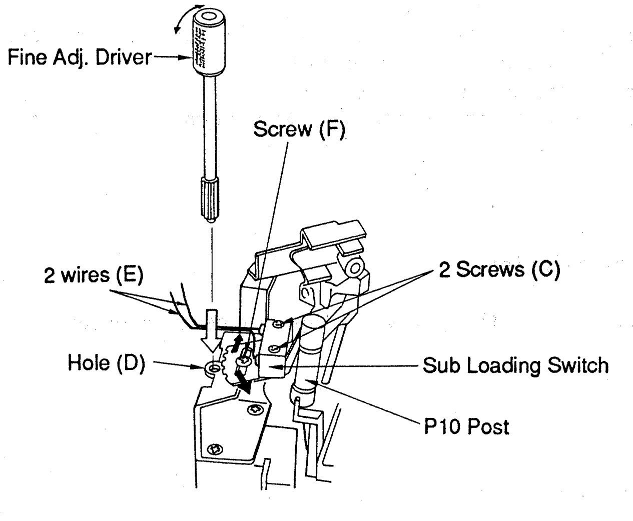

Fig. 3-18-1 Sub Loading Switch

3-19. BRAKE UNIT AND BRAKE SOLENOID REPLACEMENT

Replacement

1. Remove the MECH. INTERFACE CIRCUIT P.C.Board and Reel Base Assembly by same procedure of Reel Stand Unit replacement.
2. Remove the 4 screws (A) and (B) and remove Brake Solenoid.

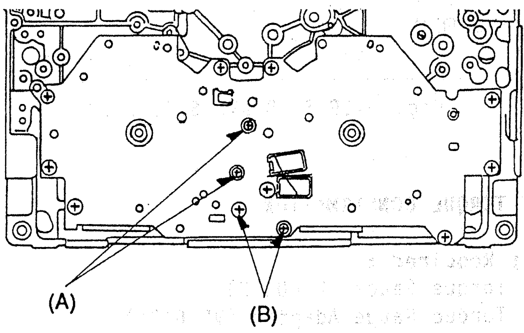

Fig. 3-19-1 Reel Base Assembly

3. Remove the 2 E-Rings (C) and (D) and remove the Brake unit.

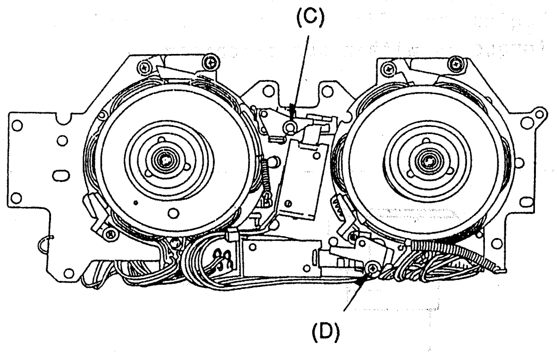

Fig. 3-19-2 Brake Unit

Installation

1. Install the new Brake unit and new Solenoid and follow the previous steps in reverse order.

Adjustment

1. Adjust Brake Solenoid position so that the space A and B are same when solenoid plunger is energized.
2. After adjustment, tighten and fix the 2 screws.

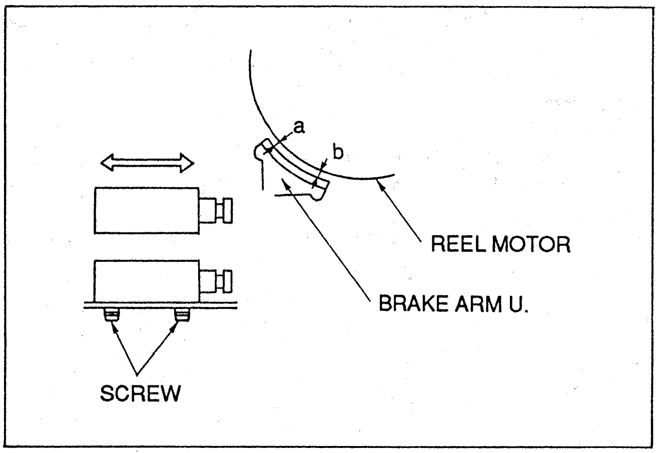

Fig. 3-19-3 Brake Solenoid

BRAKE TORQUE CONFIRMATION

***Tools Required :**
Dial Torque Gauge (VFK0133)
Dial Torque Gauge Adaptor (VFK0134)

1. Confirm that the small cassette reel table is in the down position.
2. Attach the dial torque adaptor to the dial torque gauge and place the dial torque gauge over the reel table.
4. Float the gauge slightly above the reel table as shown in figure 3-19-4 and turn it in the direction as shown in figure 3-19-5. The gauge should be read at the point where it begins to slip and confirm that the brake torque is within specification.

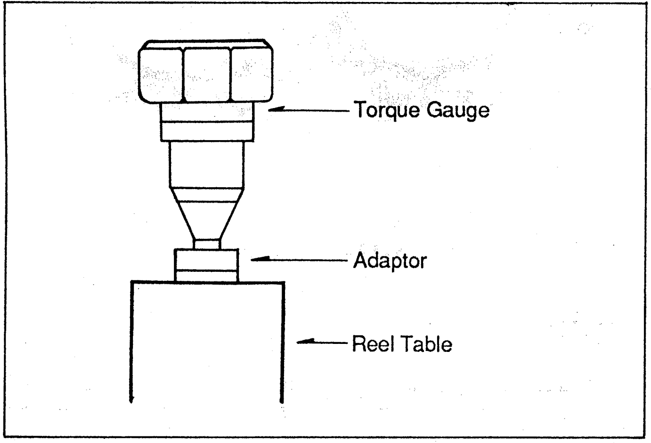

Fig. 3-19-4 Dial Torque Gauge

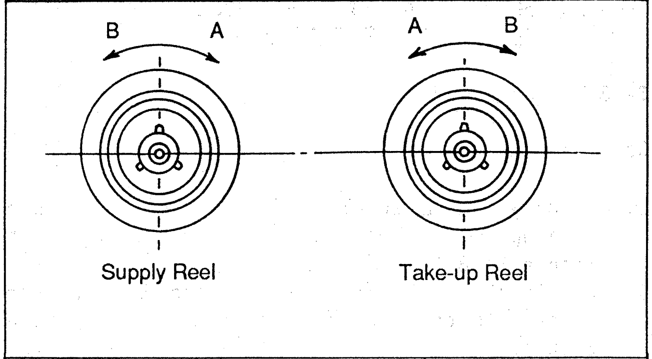

	A (gf•cm)	B (gf•cm)
Take-up	350~600	120~250
Supply	350~600	120~250

Fig. 3-19-5 Torque Confirmation

3-20. LOADING MOTOR REPLACEMENT

3-20-1. Replacement

Removal

1. Remove the bottom plate.
2. Disconnect the connector P61027 on the Mech Interface P.C.B.
3. Remove the 3 screws (A) and remove the turn roller lifter unit as shown in figure 3-20-1.
4. Remove the 3 screws (B) and remove the sub loading switch unit.
5. Remove the 4 screws (C), motor holder cover (D) and the loading motor unit (E).
6. Remove the loading belt (F).
7. Remove the screw (I) and remove the loading motor.

Installation

1. Follow the removal steps in reverse order.

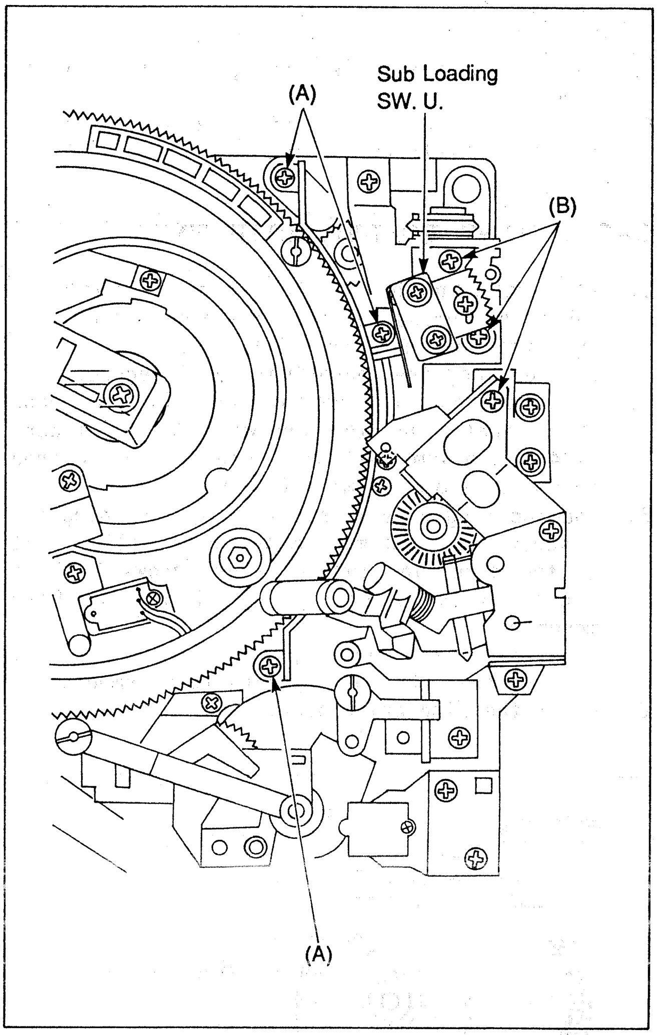
(A)
Sub Loading
SW. U.
(B)
(A)

Fig. 3-20-1 Loading Motor Unit

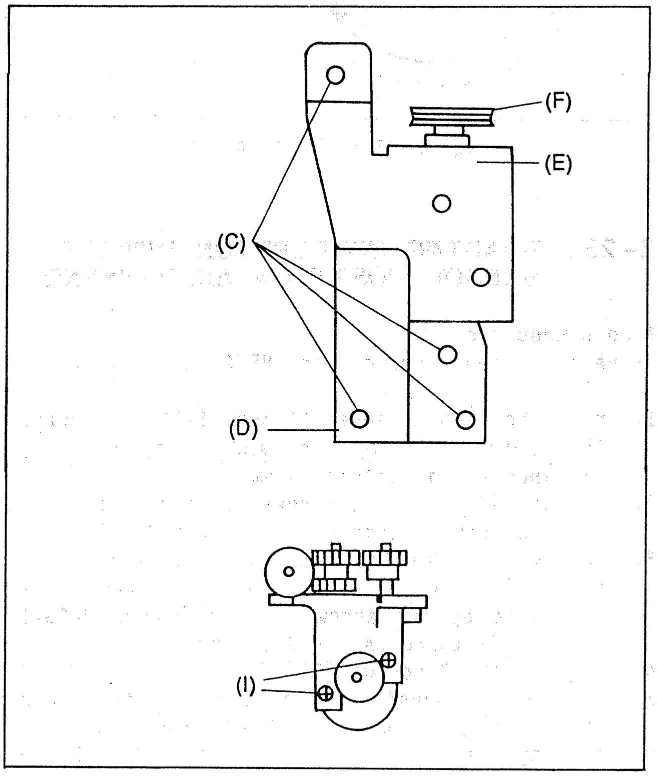

Fig. 3-20-2 Loading Motor

3-21. SMALL CASSETTE MOTOR REPLACEMENT AND ADJUSTMENT

3-21-1 Replacement

1. Unscrew the 5 screws (A) and remove the small cassette reel base unit as shown figure 3-21-1.
2. Hang off the 2 spring (B) and remove the small cassette reel base unit as shown in figure 3-21-1.
3. Lift up the warm wheel (do not remove) and unscrew 2 screws (C) and then remove the small cassette motor as shown in figure 3-21-2.

3-21-2 Installation

1. Follow the previous steps in reverse order.

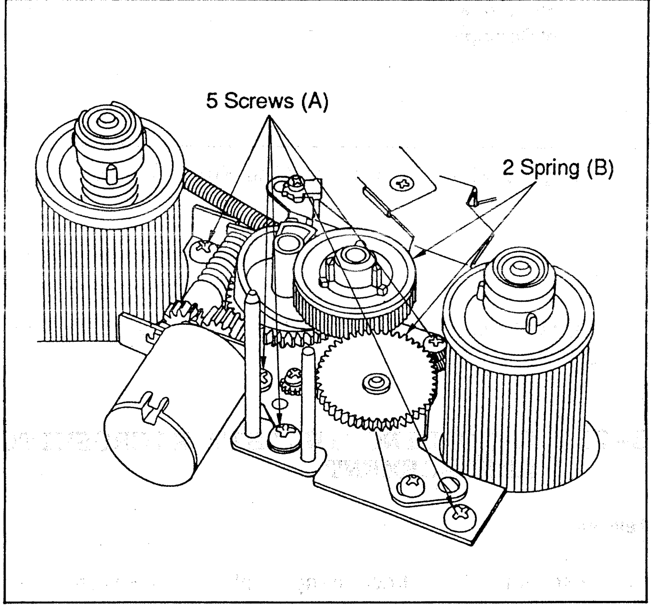
5 Screws (A)
2 Spring (B)

Fig. 3-21-1 S-Reel Base Removal

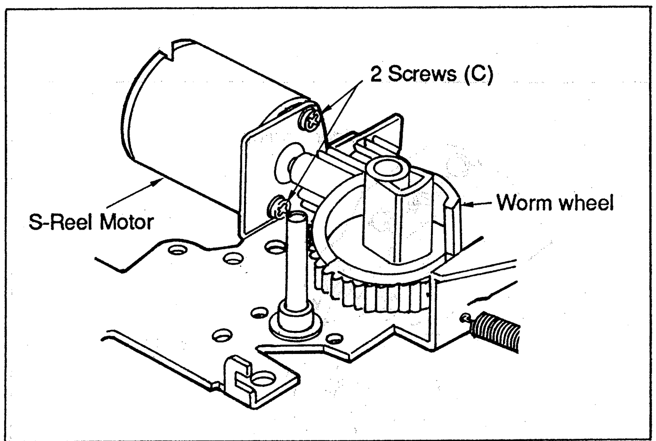
2 Screws (C)
S-Reel Motor
Worm wheel

Fig. 3-21-2 Motor Removal

3-22. FRONT LOADING MOTOR REPLACEMENT

Removal

1. Remove the front loading unit.
2. Unsolder the 2 leads on the front loading motor.
3. Remove the front loading belt.
4. Remove the 2 screws (A) and remove the front loading motor.

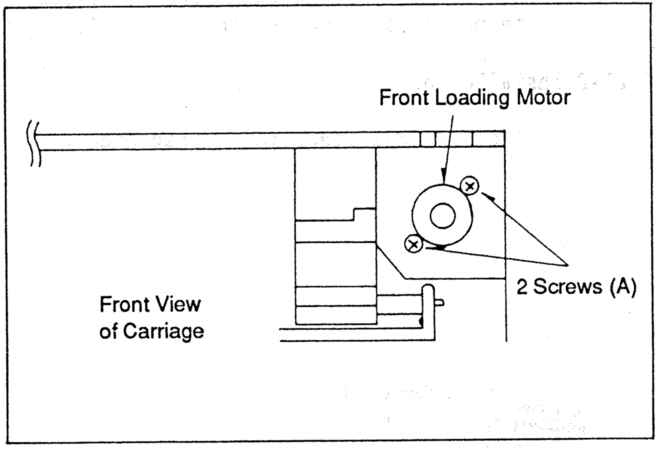

Fig. 3-22-1 Front Loading Motor Removal

Installation

1. Install new front loading Motor in reverse order.

3-23. RECORDING INHIBIT MICROSWITCH REPLACEMENT

Removal

1. Unsolder the Recording Inhibit switch and remove the screw (A) and then remove the Recording Inhibit switch as shown in figure 3-23-1.

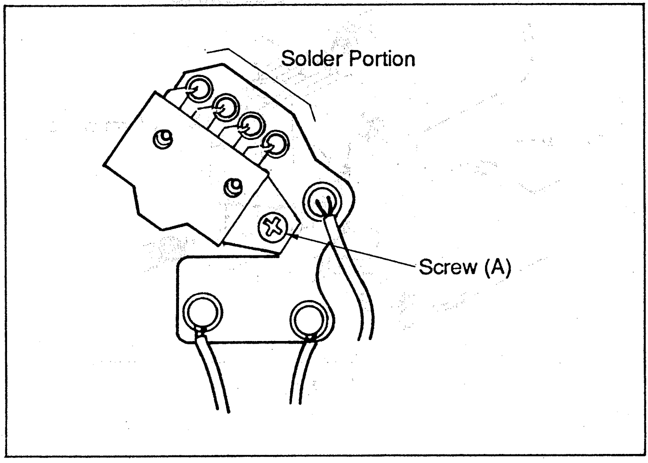

Fig. 3-23-1 Rec Inhibit SW Removal

Installation

1. Install the new Recording Inhibit SW in reverse order.
2. Confirm that both sizes of cassette (large and small) are detected properly.

3-24. RING ROLLER ADJUSTMENT

1. With the power switch off (without a cassette), press the ring drive gear down. (To free the loading ring.) Turn the loading ring counterclockwise approximately 20 degree.
2. Move the loading ring back and forth by hand as indicated by the arrows X-X' in figure 3-24-1 Confirm that the loading ring's free movement is approximately 0.3mm.
3. Loading ring play is adjusted by loosening the 2 screws (A) and moving the ring roller unit in the direction indicated by arrows Y-Y' in figure 3-24-1. Adjust for 0.3mm of free movement.
4. Tighten the 2 screws (A).
5. Confirm that the loading ring turns smoothly.
6. Reset the ring drive gear.

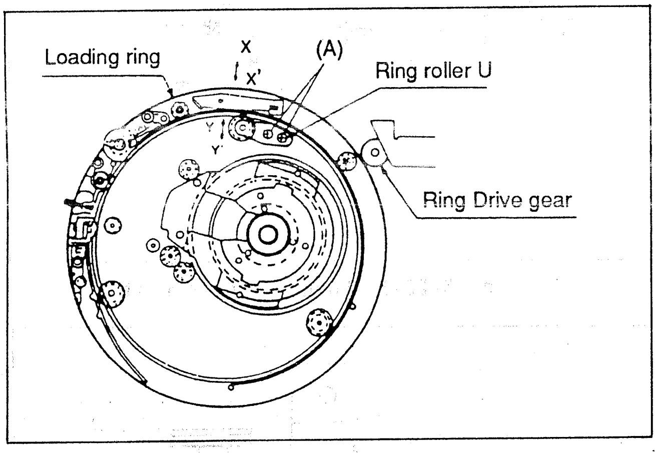

Fig. 3-24-1 Ring Roller

3-25. LOADING COMPLETION DETECT SENSOR POSITION ADJUSTMENT

***Tools Required:**
Fine Adjustment Screwdriver (VFK0446)

1. Move the stopper lever (figure 3-25-1) toward the photo sensor by hand and verify that the distance (A) is within 0-1mm.
2. If not, loosen the 2 screws (C) and insert the fine adjustment screwdriver into hole (D).
3. Adjust the loading completion detect photo assembly by moving it forward, or backward as indicated by the arrows X-Y in figure 3-25-1 so that distance (A) is 0 to 1mm.
4. Tighten the 2 screws (C).
5. After this adjustment, confirm that the photo sensor output level is more then 4.5V at loading completion and less than 0.5 volt at

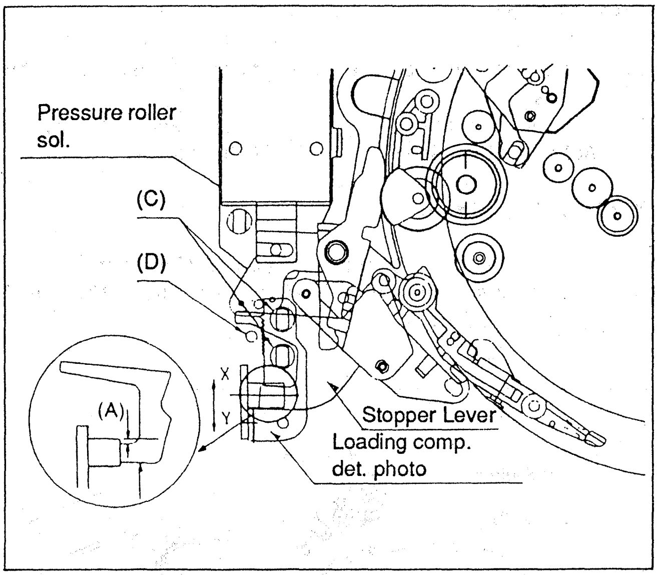

Fig. 3-25-1 Loading Completion Sensor

3-26. UNLOADING COMPLETION DETECT SENSOR POSITION ADJUSTMENT

***Tools Required:**
Fine Adjustment Screwdriver (VFK0446)

1. With the power off (without a cassette), measure the clearance (A) as in indicated in figure 3-26-1. This distance should be from 1mm to 2mm.
2. If not, loosen the 2 screws (C) and insert the fine adjustment screwdriver into hole (D). (figure 3-26-1)
3. Adjust the unloading completion detect photo sensor so that the clearance (A) is from 1mm to 2mm.
4. Tighten the 2 screws (C).

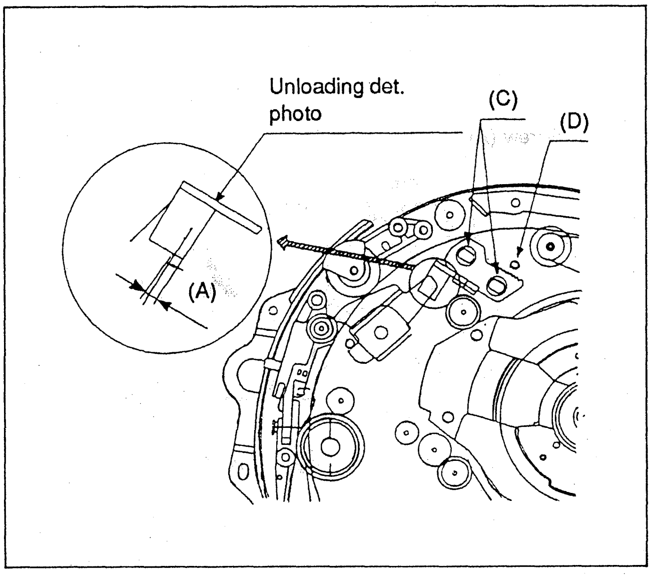

Fig. 3-26-1 Unloading Completion Sensor

3-27. POSITION OF P1 POST DRIVE ROD

***Tools Required:**
Eccentric Screwdriver (VFK0358)

1. Remove the front loading unit from the unit, reconnect the connector to the removed front loading unit. Insert a work cassette to the removed carriage and press the EJECT button.
2. Measure the distance (C) as shown in figure 3-27-1 and verify that it is within 0.5mm (+/- 0.1mm).
3. If not, loosen the two screws (A) (figure 3-27-1) and insert the eccentric screwdriver into hole (B). Adjust the P1 post drive rod length so that distance (C) becomes 0.5mm (+/- 0.1mm). Tighten the 2 screws (A) and replace the small cassette holder.

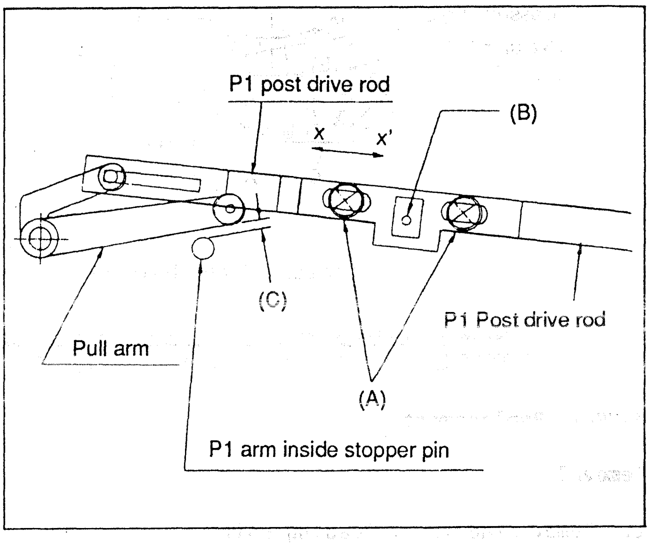

Fig. 3-27-1 P1 Post Drive Rod

3-28. CASSETTE UP AND DOWN SWITCHES ADJUSTMENT

1. Remove the front loading unit without removing the connector.
2. Insert a cassette into the front loading unit. When front loading is completed confirm that there is no clearance at the (E) position as shown in figure 3-28-1.
3. If it is not, loosen screw (A) and insert the fine adjustment screwdriver into hole (B).
4. Adjust the position of the switch (A) with the fine adjustment screwdriver so that the loading complete switch is on.
5. Tighten the screw (A) and reconfirm that there is no clearance at the (E) position.
6. Place the unit in the eject mode.
7. Slightly loosen the screw (C) and insert the fine adjustment screwdriver into hole (D).
8. Adjust the position of the switch (B), with the fine adjustment screwdriver, so that the Cassette Up and Down switch is on.

9. Then confirm that the drive pulley rotates 1/4-1/2 turn, smoothly by hand and there is no play on the mirror holder.
10. Tighten the screw (C).

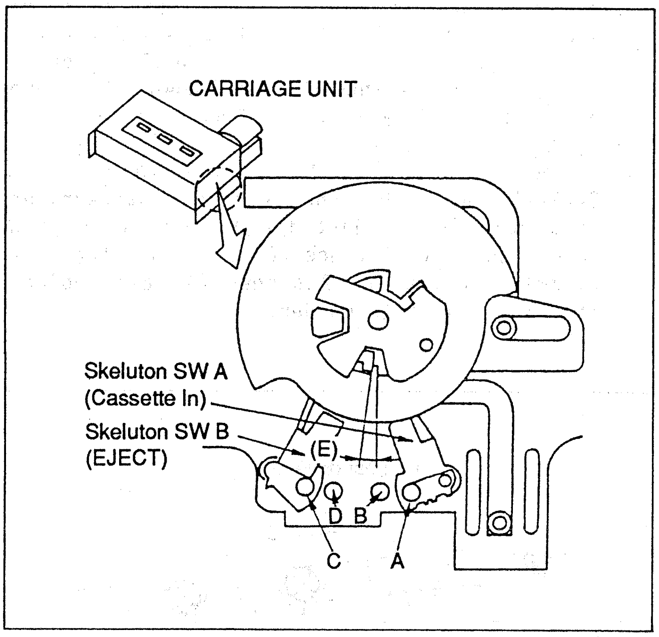

Fig. 3-28-1 Cassette Up and Down SW

3-29. FRONT LOADING U. LEAF SWITCH REPLACEMENT AND ADJUSTMENT

3-29-1. Replacement

Removal

1. Remove the front loading unit.
2. Turn the front loading unit as shown in figure 3-29-1.
3. Remove the screw (A).
4. Unsolder the wire (B) of leaf switch and remove the leaf switch.

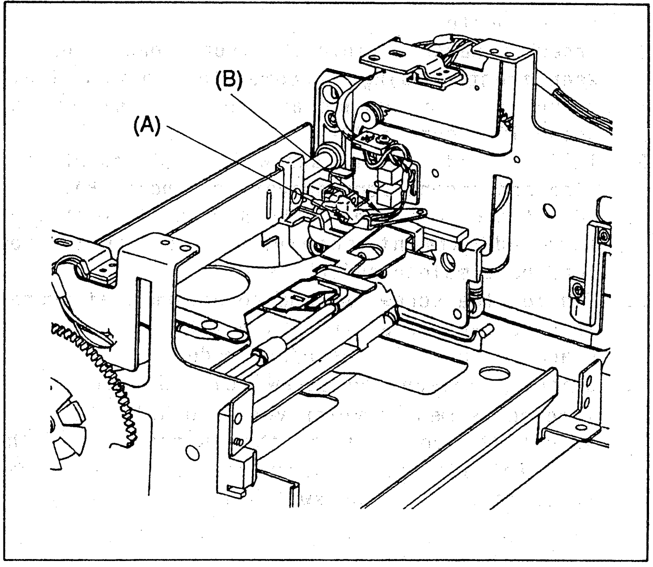

Fig. 3-29-1 Leaf SW

Installation

1. Install the new leaf switch and solder the wires.
2. Follow the previous steps in reverse order.
3. Adhere the wire (B) when it has loose.

3-29-2. Adjustment

1. If it is not, slightly loosen the screw (A) and adjust the leaf switch so that the leaf switch is on.

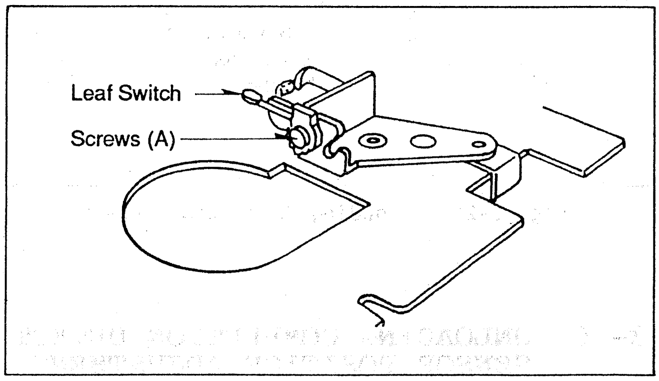

Fig. 3-29-2 Small Cassette Detect SW

3-30. SMALL CASSETTE LEAF SWITCH REPLACEMENT AND ADJUSTMENT

*Tool Required :
Fine Adjustment Screwdriver

3-30-1. Replacement

1. Unscrew the 2 screws (A) and remove the Leaf switch as shown in figure 3-30-1.
2. Unsolder the wires and install the new Leaf switch.

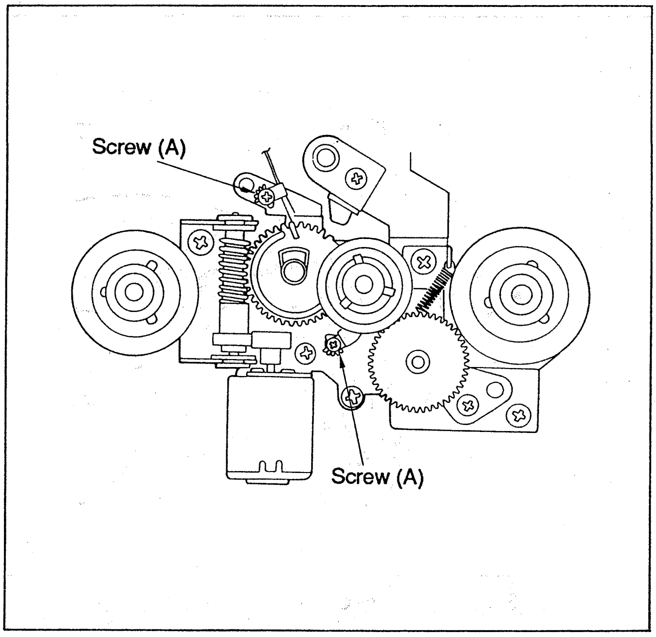

Fig. 3-30-1 Leaf Switch

3-30-2. Adjustment

1. Set the small cassette reel to down position with rotating the worm gear manually.
2. Insert the fine adjustment screwdriver into hole (B) and adjust the Leaf switch position as shown in figure 3-30-2.
3. Set the small cassette reel to the up position (engaged T-Reel Stand Unit) while rotating the worm gear manually.
4. Insert the fine adjustment screwdriver into hole (C) and adjust the Leaf switch position as same as step 2.
5. Confirm that the Leaf switch is ON when insert the both size cassette (small and large) is inserted to the cassette carriage.

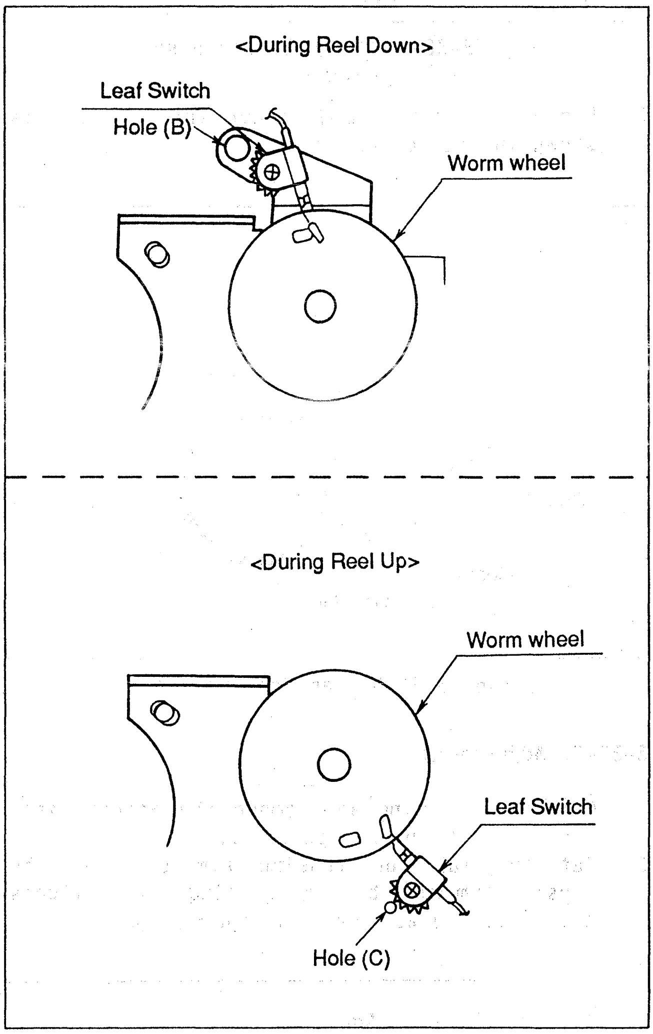

Fig. 3-30-2 Leaf SW Position Adjustment

3-31. TURN ROLLER ARM UNIT REPLACEMENT

3-31-1. Replacement

1. In order to ease replacement, unscrew 2 screws and remove the Pinch Roller Guide Unit as shown in figure 3-31-1.
2. Push the ring drive gear and turn loading ring counterclockwise manually so that the Turn Roller Arm Unit reaches toward.
3. Remove the E-ring (A) and washer (B) as shown in figure 3-31-2.

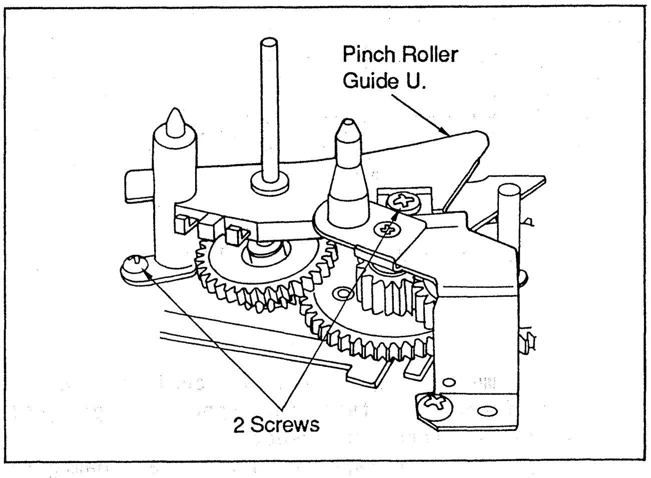

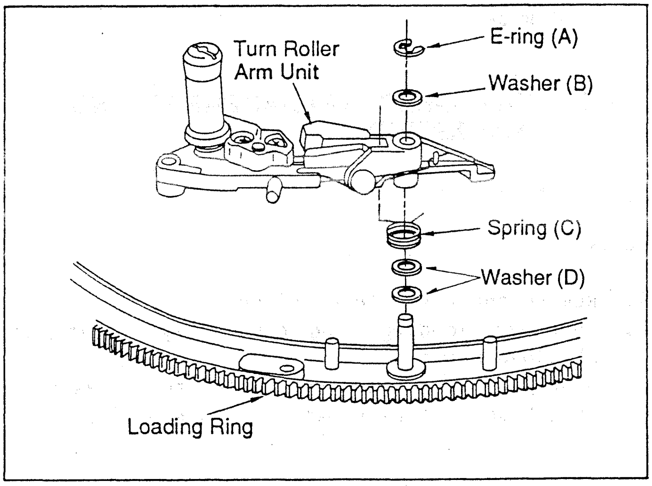

Fig. 3-31-2 Turn Roller Arm Removal

4. Hang the spring (C) off post on the loading ring and remove the Turn Roller Arm Unit as shown in figure 3-31-2.
5. Remove the 2 washers (D) as shwon in figure 3-31-2.

3-31-2. Installation

1. Follow the previous steps in reverse order.

3-31-3. Adjustment

Note :
Do not adjust the P7 post tilt because supplied service parts have already adjusted.

1. Place the unit in the SHTL x 1 and SHTL x -1 mode and confirm that the tape curling or tape damaging does not occur at tape upper edge as shown in figure 3-31-3.

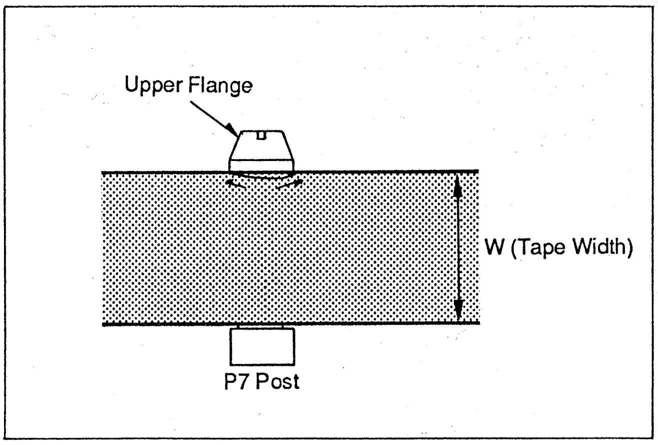
Upper Flange
W (Tape Width)
P7 Post

Fig. 3-31-3 P7 Tape Travel

2. If too much upper limit is applied, adjust upper flange so that the upper flange just touches the tape upper edge.
3. Confirm that the tape curling or tape damaging does not occur at P6 post in SHTL x 1 and SHTL x -1 mode.

3-32. CAM GEAR REPLACEMENT AND ADJUSTMENT

3-32-1. Replacement

Removal

1. Remove the cassette carriage.
2. Turn the loading ring completely loading to the load position.
3. Unscrew 5 screws and remove the small cassette reel base unit as shown in figure 3-32-1.

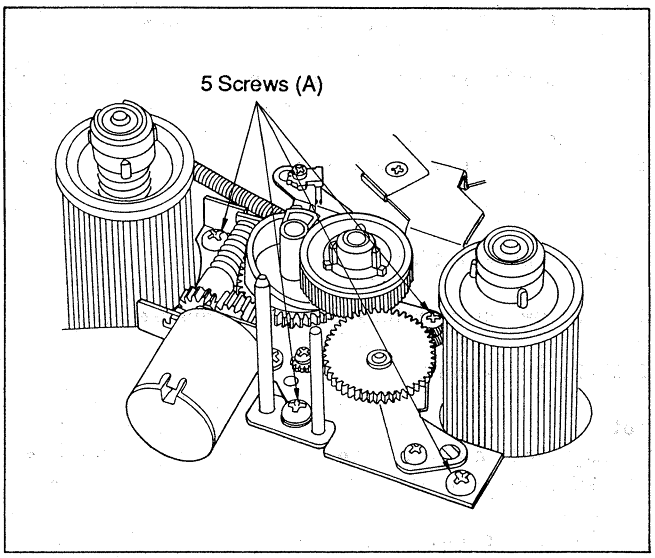

Fig. 3-32-1 Small Cassette Reel Base U.

4. Unscrew 3 screws and remove the photo sensor unit as shown in figure 3-32-2.

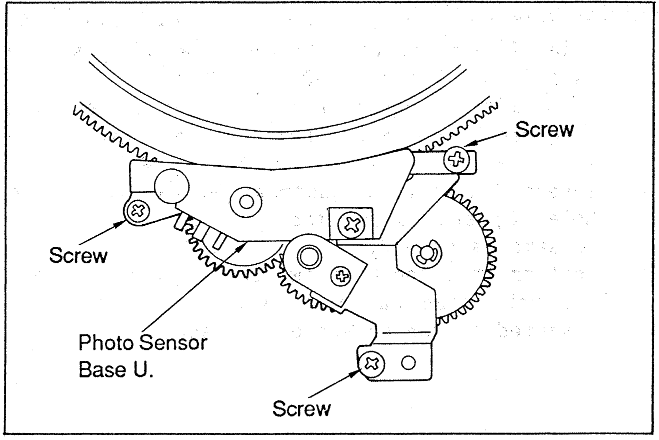
Screw
Screw
Photo Sensor
Base U.
Screw

Fig. 3-32-2 Photo Sensor Base U.

5. Remove the E-ring and remove the cam gear as shown in figure 3-32-3.

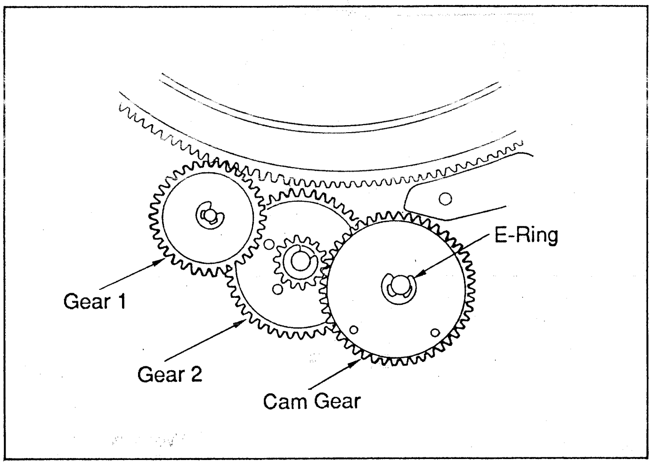
E-Ring
Gear 1
Gear 2
Cam Gear

Fig. 3-32-3 Cam Gear Removal

3-32-2. Adjustment

1. Remove the E-ring and remove the intermediate gear 1 as shown in figure 3-32-3.
2. Set the take up tension arm so that the tension arm will be free (spring activity does not function) as shown in figure 3-32-4.

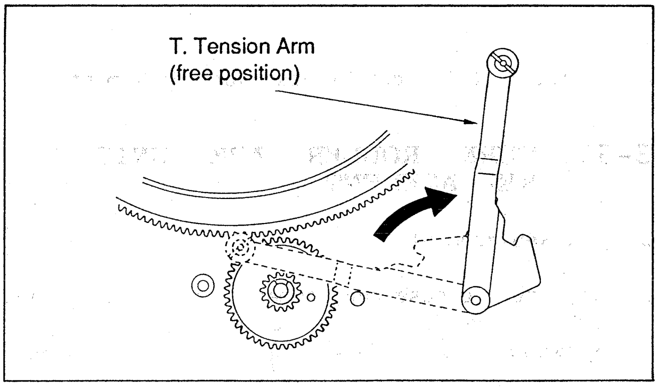
T. Tension Arm
(free position)

Fig. 3-32-4 T-Tension Arm Setting

3. Set the hole of intermediate gear 2 to the line between the shaft A and B as shown in figure 3-32-5.

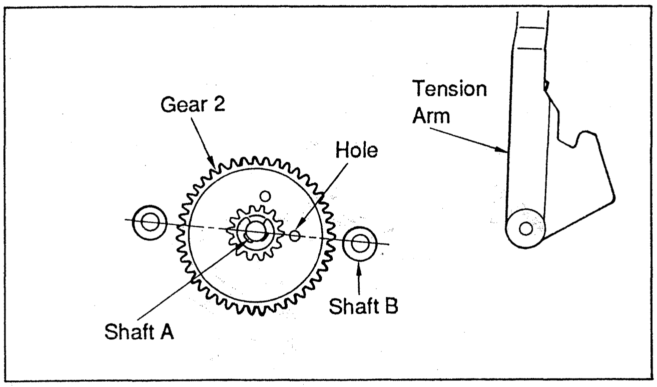
Gear 2
Tension Arm
Hole
Shaft B
Shaft A

Fig. 3-32-5 Intermediate Gear 2 Setting

4. Install the new cam gear to the shaft B.
5. Set the hole of cam gear so that the hole of cam gear is matched with hole of intermediate gear 2 as shown in figure 3-32-6.
6. Turn the cam gear clockwise so that the tension arm pin is fits into the groove of cam gear as shown in figure 3-32-6.

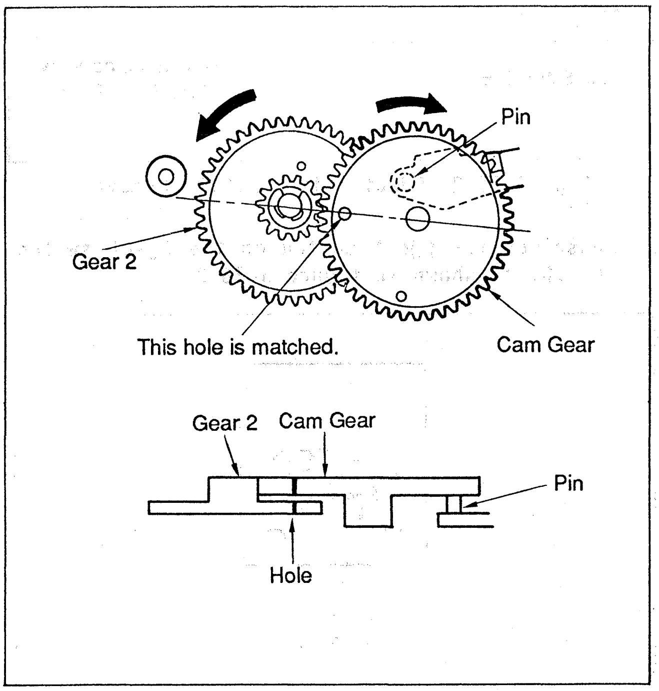
Pin
Gear 2
This hole is matched.
Cam Gear
Gear 2
Cam Gear
Pin
Hole

Fig. 3-32-6 Cam Gear Phase Adj. 1

7. Move back the take up tension arm and set the each hole of gear to the center on the line between shaft A and B (moving each gear) as shown in figure 3-32-7.
8. Turn the loading ring completely unloading position and install the intermediate gear 1.

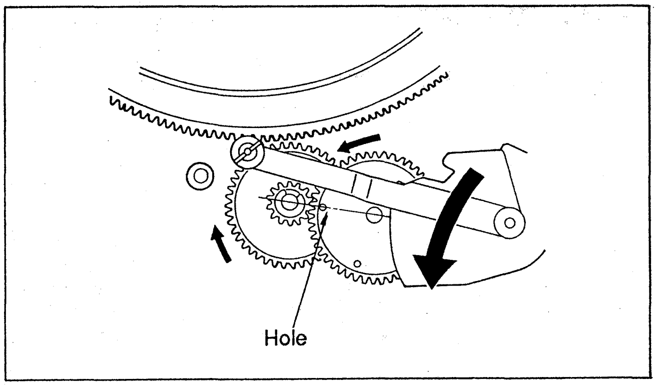

Fig. 3-32-7 Cam Gear Phase Adj. 2

9. Install the small cassette reel base unit and photo sensor base unit in reverse order.

3-33. CARRIAGE ILLUMINATION LAMP REPLACEMENT

Removal

1. Unscrew the 4 screws (A) and remove the carriage fix plate (C) as shown in figure 3-33-1.
2. Unscrew the 2 screws (B) and remove the lamp cover as shown in figure 3-33-1.
3. Unsolder lamp lead and remove the Carriage Lamp.

Installation

1. Follow the previous steps in reverse order.

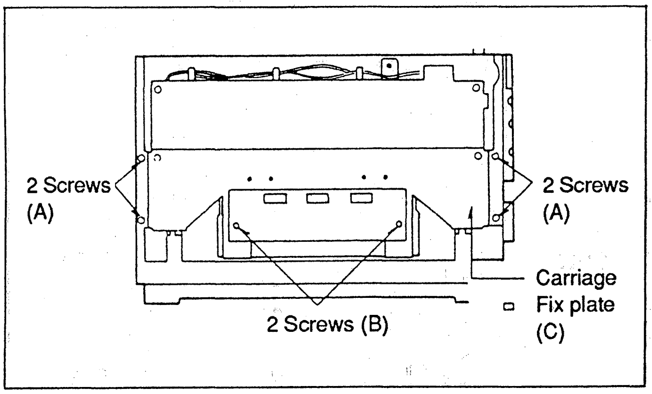
2 Screws (A)
2 Screws (A)
Carriage Fix plate (C)
2 Screws (B)

Fig. 3-33-1 Carriage Illumination Lamp

3-34. FAN MOTOR REPLACEMENT

1. Remove the top panel and remove the 2 screws (A).

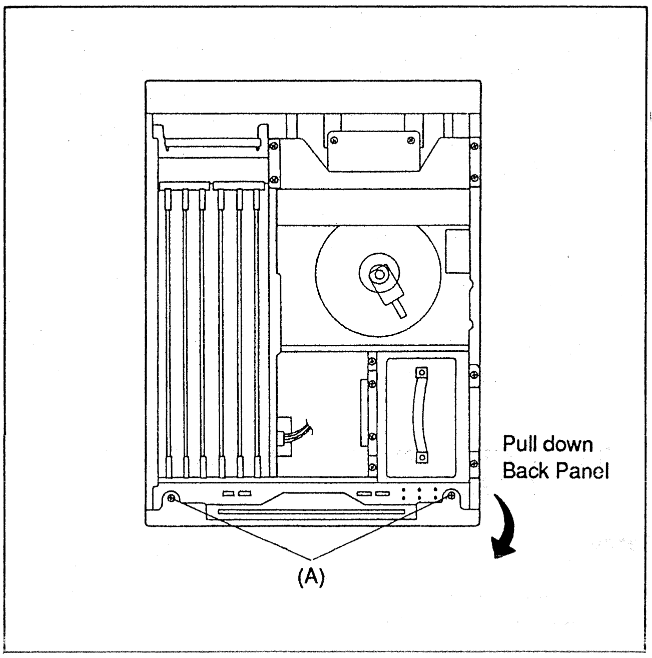
Pull down
Back Panel
(A)

Fig. 3-34-1 Back Panel

2. Pull down the back panel and disconnect CN205 and CN206 on Audio I/O P.C.Board.
3. Remove the 8 screws (B) and (C) and remove the Fan Motors.

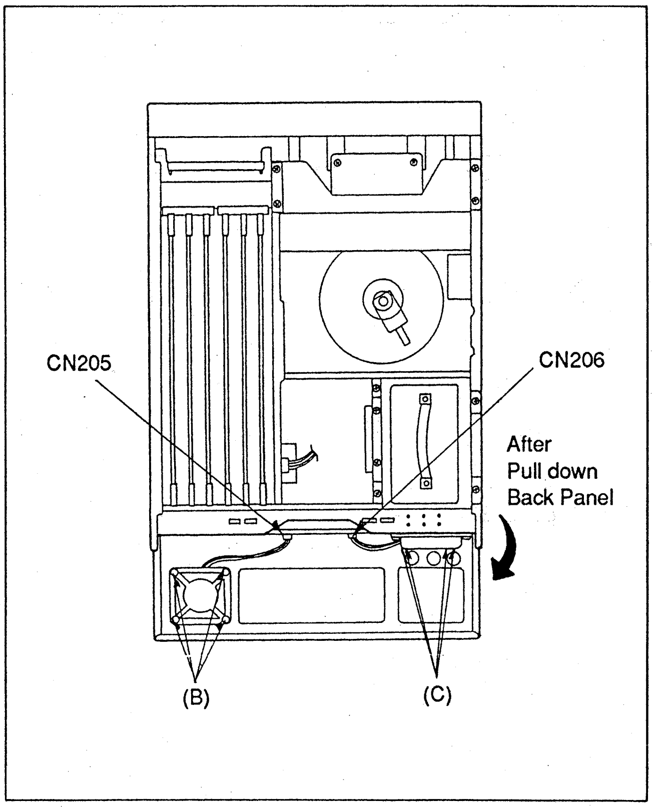
CN205
CN206
After
Pull down
Back Panel
(B)
(C)

Fig. 3-34-2 Fan Motors

3-35. EJECT SW REPLACEMENT

1. Loosen 2 silver screws and remove the 4 screws (A) and then remove the front panel as shown in figure 3-35-1.

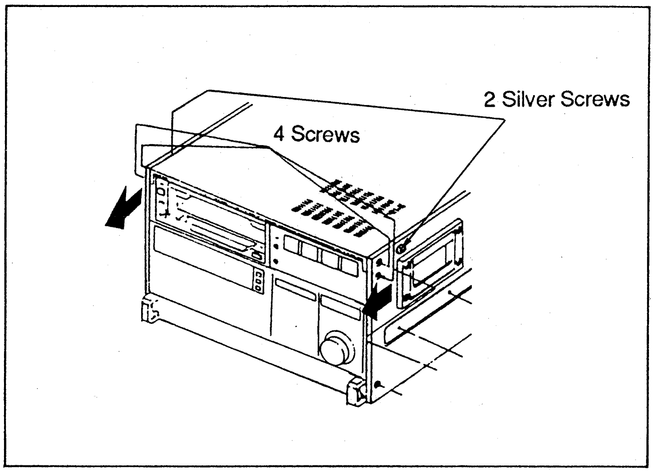
2 Silver Screws
4 Screws

Fig. 3-35-1 Front Panel Removal

2. Remove the screw (B) on the Front Panel as shown in figure 3-35-2.

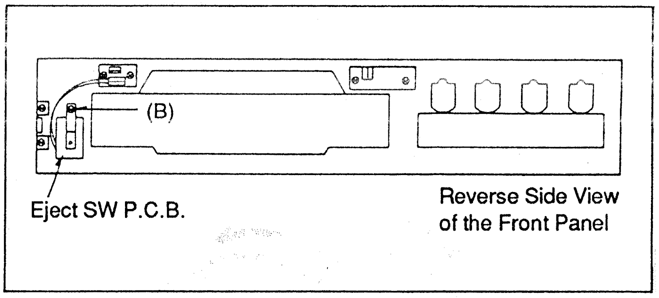
(B)
Eject SW P.C.B.
Reverse Side View
of the Front Panel

Fig. 3-35-2 Eject switch P.C.B. Removal

3. Unsolder the Eject switch on the Eject switch P.C.B. as shown in figure 3-35-3.

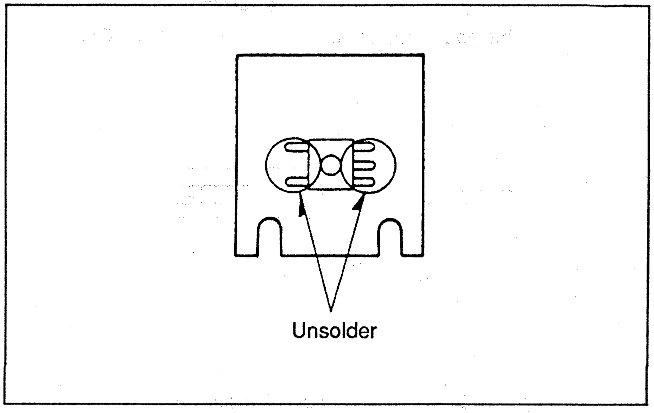

Fig. 3-35-3 Eject Switch

Note :
When replacing the eject switch, be sure not to lose the spring.

3-36. POWER SWITCH REPLACEMENT

Removal

1. Loosen 2 silver screws and remove the 4 screws (A) and then remove the front panel as shown in figure 3-36-1.
2. Remove the 2 screws (B) and unsolder the wires of power switch as shown in figure 3-36-1.
3. Remove the Power Switch.

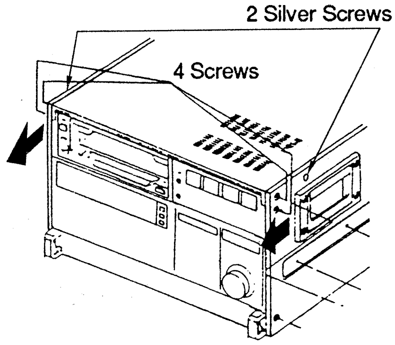
2 Silver Screws
4 Screws

Fig. 3-36-1 Front Panel Removal

Installation

1. Follow the previous steps in reverse order.

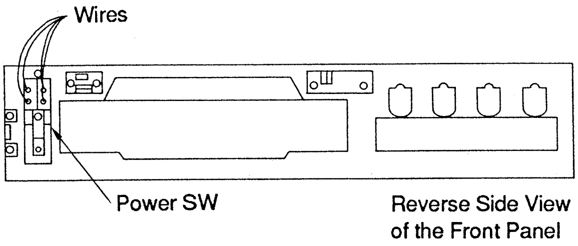
Wires
Power SW
Reverse Side View
of the Front Panel

Fig. 3-36-2 Power Switch Removal

ELECTRICAL ADJUSTMENTS

This section covers the electrical adjustment.

Note:

1. Some preference switches are located on printed circuit boards within the unit. Be sure to turn off the power prior to opening the unit, before changing the position of any switch, and especially before removing or reinserting any circuit board.
2. Pre-heat the unit over two hours before the electrical adjustment.
3. After servicing and adjustment, see to it that all parts such as insulation barriers, insulators, shields, jumper wires, and witing harnesses are properly re-installed as originally found.

CONTENTS

SAFETY PRECAUTIONS.. 4-1

1. INFORMATION FOR ELECTRICAL ADJUSTMENT 4-2
1-1. MAIN ADJUSTMENT FLOWCHART... 4-2
1-2. RECOMMENDED TEST AND SERVICE EQUIPMENT.. 4-3
1-3. SIGNAL GENERATOR CONNECTION METHODE & INPUT SELECT SWITCH SETTING (FOR ELECTRICAL ADJUSTMENT) 4-4

2. POWER SUPPLY UNIT

2-1. +5V ADJUSTMENT.. 4-5
2-2. +7.5V ADJUSTMENT 4-5

3. SYSTEM CONTROL (B1) BOARD

3-1. SUPER IMPOSE HORIZONTAL POSITION ADJUSTMENT 4-6

4. SERVO (W5) BOARD

SERVO SECTION (W5) FLOWCHART FOR AU-65.. 4-7
SERVO SECTION (W5) FLOWCHART FOR AU-63.. 4-8
SERVO SECTION (W5) FLOWCHART FOR AU-62.. 4-9

4-1. MACHINE CONDITION SETTING (1)... 4-10
4-2. NEUTRAL VOLTAGE ADJUSTMENT 4-10
4-3. SUBLOADING VOLTAGE ADJUSTMENT 4-10
4-4. SUPPLY & TAKE-UP SENSOR VOLTAGE ADJUSTMENT 4-11
4-5. SUPPLY (FWD.) TENSION ADJUSTMENT 4-12
4-6. TAKE-UP (FWD.) TENSION ADJUSTMENT 4-13
4-7. SUPPLY (REV.) TENSION ADJUSTMENT.. 4-14
4-8. TAKE-UP (REV.) TENSION ADJUSTMENT... 4-14
4-9. STARTING TORQUE ADJUSTMENT.. 4-15
4-10. SUB-LOADING TENSION ADJUSTMENT.. 4-15
4-11. LOADING & UNLOADING CONFIRMATION... 4-16
4-12. FF TENSION ADJUSTMENT... 4-16
4-13. REW TENSION ADJUSTMENT... 4-17
4-14. MACHINE CONDITION SETTING (2) 4-19
4-15. OSCILLATION FREQUENCY ADJUSTMENT.. 4-18
4-16. CAPSTAN PHASE POSITION ADJUSTMENT (AU-65)... 4-18
4-17. CAPSTAN PHASE POSITION ADJUSTMENT (AU-62)... 4-19
4-18. CAPSTAN PHASE POSITION ADJUSTMENT (AU-63)... 4-19
4-19. TRACKING FIX ADJUSTMENT (AU-65)... 4-20
4-20. TRACKING FIX ADJUSTMENT (AU-63)... 4-20
4-21. TRACKING FIX ADJUSTMENT (AU-62)... 4-21
4-22. x1/32 SPEED ADJUSTMENT (1).. 4-21
4-23. x1/32 SPEED ADJUSTMENT (2).. 4-22
4-24. PG SHIFTER ADJUSTMENT (FOR AU-65/62) 4-23
4-25. PG SHIFTER ADJUSTMENT (FOR AU-63)... 4-23
4-26. REC SHIFTER ADJUSTMENT (FOR AU-65)... 4-24
4-27. DRUM PHASE FLUCTUATION CONFIRMATION (FOR AU-65).. 4-24
4-28. DRUM PHASE FLUCTUATION CONFIRMATION (FOR AU-62/63)... 4-25
4-29. CTL AMP CONFIRMATION (FOR AU-6)... 4-25
4-30. CTL AMP CONFIRMATION (FOR AU-62/63) 4-26

4-31. CTL-RECOVER CIRCUIT OPERATING CONFIRMATION 4-26
4-32. 50 PIN PARALLEL REMOTE CAPSTAN OVERRIDE SYNCHRONIZATION ADJUSTMENT 4-27
4-33. SWITCHING POWER SOURCE ADJUSTMENT (FOR AU-63) 4-29
4-34. OFFSET ADJUSTMENT (1) (FOR AU-63) 4-29
4-35. OFFSET ADJUSTMENT (2) (FOR AU-63) 4-29
4-36. MACHINE CONDITION SETTING (3) 4-30
4-37. CAPSTAN FG ADJUSTMENT (FOR AU-63) 4-30
4-38. CTL PHASE SHIFTER ADJUSTMENT (FOR AU-63) 4-31
4-39. X-VALUE ADJUSTMENT (FOR AU-63) 4-31
4-40. AT GAIN ADJUSTMENT (1) (FOR AU-63) 4-32
4-41. AT GAIN ADJUSTMENT (2) (FOR AU-63) 4-32
4-42. ENVELOPE INPUT LEVEL ADJUSTMENT (FOR AU-63) 4-33
4-43. AUTO TRACKING CONFIRMATION (FOR AU-63) 4-33

5. LINEAR AUDIO SECTION (W6) FLOWCHART FOR AU-65 4-34
LINEAR AUDIO SECTION FLOWCHART FOR AU-63 AND AU-62 4-35
LINEAR AUDIO SECTION 4-36

5-1. MACHINE CONDITION SETTING (FOR AU-65) 4-36
5-2. DOLBY ENCODER LEVEL ADJUSTMENT (FOR AU-65) 4-36
5-3. E-E OUTPUT LEVEL ADJUSTMENT (FOR AU-65) 4-37
5-4. METER LEVEL ADJUSTMENT (FOR AU-65) 4-38
5-5. PLAYBACK EQ ADJUSTMENT (FOR AU-65) 4-39
5-6. PLAYBACK MASTER PHASE CONFIRMATION (FOR AU-65) 4-39
5-7. DOLBY DECODE LEVEL ADJUSTMENT (FOR AU-65) 4-40
5-8. PLAYBACK OUTPUT LEVEL ADJUSTMENT (FOR AU-65) 4-40
5-9. OSCILLATION RESONANCE POINT ADJUSTMENT (FOR AU-65) 4-41
5-10. AUDIO BIAS CURRENT ADJUSTMENT (FOR AU-65) 4-42
5-11. RECORDING EQUALIZER ADJUSTMENT (FOR AU-65) 4-43
5-12. RECORDING CURRENT ADJUSTMENT (FOR AU-65) 4-45
5-13. CH1→CH2 CROSS TALK CANCEL ADJUSTMENT (FOR AU-65) 4-46
5-14. CH2→CH1 CROSS TALK CANCEL ADJUSTMENT (FOR AU-65) 4-48
5-15. RECORDING PHASE ADJUSTMENT (FOR AU-65) 4-50
5-16. MACHINE CONDITION SETTING (FOR AU-63/62) 4-52
5-17. PLAYBACK EQ CONFIRMATION (FOR AU-62/63) 4-52
5-18. PLAYBACK MASTER PHASE CONFIRMATION (FOR AU-62/63) 4-53
5-19. DOLBY DECODE LEVEL ADJUSTMENT (FOR AU-62/63) 4-53
5-20. PLAYBACK OUTPUT LEVEL ADJUSTMENT (FOR AU-62/63) 4-54
5-21. METER LEVEL ADJUSTMENT (FOR AU-62/63) 4-55

6. DECODER & CTCM BOARD (1/2)

DECODER & CTCM SECTION (1/2) (W4) FLOWCHART FOR AU-65 4-56

6-1. SIGNAL SOURCE 4-57
6-2. NON-STANDARD PLL ADJUSTMENT (1) (FOR AU-65) 4-58
6-3. STANDARD PLL CONFIRMATION (FOR AU-65) 4-59
6-4. STANDARD PLL ADJUSTMENT (FOR AU-65) 4-59
6-5. NON-STANDARD PLL ADJUSTMENT (2) (FOR AU-65) 4-60
6-6. COMPONENT INPUT Y OUTPUT LEVEL CONFIRMATION (FOR AU-65) 4-61
6-7. CLAMP REFERENCE ADJUSTMENT (FOR AU-65) 4-62

6-8. Pr A/D INPUT LEVEL ADJUSTMENT (FOR AU-65) 4-63
6-9. Y BURST LEVEL ADJUSTMENT (FOR AU-65) 4-65
6-10. CTCM LEVEL CONFIRMATION (FOR AU-65) 4-66
6-11. C BURST & SYNC LEVEL ADJUSTMENT (FOR AU-65) 4-66

7. MODULATION & DEMODULATION (W3) BOARD (1/2)

MODULATION & DEMODULATION SECTION (1/2) (W3) FLOWCHART FOR AU-65 4-67
MODULATION & DEMODULATION SECTION (1/2) (W3) FLOWCHART FOR AU-63 4-69
MODULATION & DEMODULATION SECTION (1/2) (W3) FLOWCHART FOR AU-62 4-71
7-1. Y PLAYBACK FM CARRIER LEVEL ADJUSTMENT 4-73
7-2. C PLAYBACK FM CARRIER LEVEL ADJUSTMENT 4-73
7-3. Y GROUP DELAY EQ CONFIRMATION OR ADJUSTMENT 4-74
7-4. C GROUP DELAY EQ CONFIRMATION OR ADJUSTMENT 4-74
7-5. Y TERM PRESET OR ADJUSTMENT 4-75
7-6. Y EQ 3 ADJUSTMENT 4-75
7-7. Y EQ 4 ADJUSTMENT 4-75
7-8. Y AUTO EQ DT VR PRESET 4-75
7-9. C PLAYBACK FM B.P.F. FREQUENCY RESPONSE ADJUSTMENT 4-76
7-10. Y DROP OUT DETECT BALANCE ADJUSTMENT 4-76
7-11. C DROP OUT DETECT BALANCE ADJUSTMENT 4-77
7-12. Y SUPER LIMITER PULSE POSITION ADJUSTMENT 4-78
7-13. C SUPER LIMITER PULSE POSITION ADJUSTMENT 4-78
7-14. Y NON-LINEAR DE-EMPHASIS LEVEL ADJUSTMENT 4-79
7-15. Y NON-LINEAR DE-EMPHASIS LIMITER LEVEL ADJUSTMENT 4-80
7-16. C NON-LINEAR DE-EMPHASIS LEVEL ADJUSTMENT 4-81
7-17. C NON-LINEAR DE-EMPHASIS LIMITER LEVEL ADJUSTMENT 4-82
7-18. Y DE-MODULATOR BALANCE ADJUSTMENT 4-83
7-19. C DE-MODULATOR BALANCE ADJUSTMENT 4-84
7-20. VIDEO CLIP ADJUSTMENT (FOR AU-65) 4-85
7-21. Y NON-LINEAR PRE-EMPHASIS LEVEL ADJUSTMENT (FOR AU-65) 4-86
7-22. VIDEO/SYNC METER ADJUSTMENT (FOR AU-65) 4-87
7-23. Y NON-LINEAR EMPHASIS LIMITER LEVEL ADJUSTMENT (FOR AU-65) 4-88
7-24. C NON-LINEAR PRE-EMPHASIS LEVEL ADJUSTMENT (FOR AU-65) 4-89
7-25. C NON-LINEAR LIMITER ADJUSTMENT (FOR AU-65) 4-90
7-26. Y FM DEVIATION ADJUSTMENT (FOR AU-65) 4-92
7-27. Y WHITE & DARK CLIP ADJUSTMENT (FOR AU-65) 4-94
7-28(A). Y MODULATOR BALANCE ADJUSTMENT (BY USING SPECTRUM ANALYZER) (FOR AU-65) 4-95
7-28(B). Y MODULATOR BALANCE ADJUSTMENT (BY USING OSCILLOSCOPE) (FOR AU-65) 4-96
7-29. Y DEVIATION CONFIRMATION (FOR AU-65) 4-97
7-30. C CLAMP PULSE POSITION ADJUSTMENT (FOR AU-65) 4-98
7-31. C FM DEVIATION ADJUSTMENT (FOR AU-65) 4-99
7-32. C WHITE & DARK CLIP ADJUSTMENT (FOR AU-65) 4-101
7-33(A). C MODULATOR BALANCE ADJUSTMENT (BY USING SPECTRAM ANALYZER) (FOR AU-65) 4-102

7-33(B). C MODULATOR BALANCE ADJUSTMENT (BY USING OSCILLOSCOPE) (FOR AU-65) ... 4-103
7-34. C DEVIATION CONFIRMATION (FOR AU-65) ... 4-104
7-35(A). C REC FM B.P.F. FREQUENCY RESPONSE ADJUSTMENT (FACTORY ADJ.) (FOR AU-65) ... 4-105
7-35(B). C REC FM B.P.F. FREQUENCY RESPONSE ADJUSTMENT (FIELD ADJ.) (FOR AU-65) ... 4-105
7-36. Y NON LINEAR DE-EMPHASIS LIMITER LEVEL ADJUSTMENT (FOR AU-65) ... 4-106
7-37. C NON LINEAR DE-EMPHASIS LIMITER ADJUSTMENT (FOR AU-65) ... 4-107
7-38. Y PLAYBACK GROUP DELAY EQ ADJUSTMENT (FOR PAL) ... 4-109
7-39. Y PLAYBACK FREQUENCY RESPONSE ADJUSTMENT (FOR AU-62/65) ... 4-110
7-40. Y PLAYBACK FREQUENCY RESPONSE ADJUSTMENT (FOR AU-63) ... 4-111
7-41. C PLAYBACK FREQUENCY RESPONSE ADJUSTMENT (FOR AU-62/65) ... 4-112
7-42. C PLAYBACK FREQUENCY RESPONSE ADJUSTMENT (FOR AU-63) ... 4-112
7-43. Y DEMOD OUTPUT DC LEVEL ADJUSTMENT (FOR PAL) ... 4-113

8. TBC & SYNC GEN. (W1) BOARD (1/2)
TBC & SYNC GEN. SECTION (1/2) (W1) FLOWCHART FOR AU-65, AU-63 AND AU-62 ... 4-114

8-1. MACHINE CONDITION SETTING ... 4-115
8-2. S/H ADJUSTMENT ... 4-115
8-3. VCO (14.3MHz/17.7MHz) ADJUSTMENT ... 4-116
8-4. REF SCH DET ADJUSTMENT ... 4-117
8-5. REF SCH & REF CF CONFIRMATION ... 4-119
8-6. SYSTEM PHASE ADJUSTMENT ... 4-121
8-7. SYSTEM H PHASE ADJUSTMENT ... 4-123
8-8. Y BURST SEP CIRCUIT ADJUSTMENT (COARSE) ... 4-124
8-9. Y BURST SEP CIRCUIT ADJUSTMENT (FINE) ... 4-124
8-10. C BURST SEP CIRCUIT ADJUSTMENT (COARSE) ... 4-125
8-11. C BURST SEP CIRCUIT ADJUSTMENT (FINE) ... 4-125
8-12. Y APC ADJUSTMENT (COARSE) ... 4-126
8-13. Y APC ADJUSTMENT (FINE) ... 4-126
8-14. C APC ADJUSTMENT (COARSE) ... 4-127
8-15. C APC ADJUSTMENT (FINE) ... 4-127
8-16. SEARCH VCO CONFIRMATION FOR AU-65/63/62 ... 4-128
8-17. D/A REFERENCE VOLTAGE ADJUSTMENT (1) ... 4-129
8-18. D/A REFERENCE VOLTAGE ADJUSTMENT (2) ... 4-129
8-19. B-Y PHASE ADJUSTMENT ... 4-130
8-20. R-Y PHASE ADJUSTMENT FOR AU-65/63/62 ... 4-130

9. ENCODER (W2) BOARD (1/2)
ENCODER SECTION (1/2) (W2) FLOWCHART FOR AU-65, AU-63 AND AU-62 ... 4-131

9-1. MACHINE CONDITION SETTING ... 4-133
9-2. Y A/D PEDESTAL VOLTAGE ADJUSTMENT ... 4-133
9-3. C A/D PEDESTAL VOLTAGE ADJUSTMENT ... 4-134
9-4. Y A/D INPUT GAIN ADJUSTMENT ... 4-134
9-5. C A/D INPUT GAIN ADJUSTMENT ... 4-135
9-6. COMPOSITE SYNC LEVEL ADJUSTMENT ... 4-135

9-7. Y BLANKING DC VOLTAGE ADJUSTMENT 4-136
9-8. COMPONENT Y OUTPUT LEVEL ADJUSTMENT 4-136
9-9. COMPONENT Pb LEVEL ADJUSTMENT 4-137
9-10. ID PULSE ADJUSTMENT 4-137
9-11. COMPONENT Pr LEVEL ADJUSTMENT 4-138
9-12. VIDEO BLANKING DC ADJUSTMENT 4-138
9-13. VIDEO 2 OUTPUT LEVEL ADJUSTMENT 4-139
9-14. BURST ADJUSTMENT 4-140
9-15. VIDEO BURST LEVEL ADJUSTMENT 4-141
9-16. CARRIER LEAKAGE ADJUSTMENT 4-141
9-17. VIDEO OUTPUT VECTOR ADJUSTMENT 4-142
9-18. COMPONENT Y/C TIMING ADJUSTMENT 4-142
9-19. COMPOSITE Y/C TIMING ADJUSTMENT 4-143
9-20. VIDEO 1 OUTPUT LEVEL CONFIRMATION 4-144
9-21. Y/C OUT VECTOR ADJUSTMENT (1) 4-145
9-22. Y/C OUT VECTOR ADJUSTMENT (2) 4-146
9-23. VIDEO OUTPUT FREQUENCY RESPONSE ADJUSTMENT 4-146
9-24. Y OUTPUT FREQUENCY RESPONSE ADJUSTMENT 4-147
9-25. SUPER IMPOSE CHARACTER LEVEL ADJUSTMENT 4-147

10. TBC & SYNC GEN. (W1) BOARD (2/2)

TBC & SYNC GEN. SECTION (2/2) (W1) FLOWCHART FOR AU-65 4-148
TBC & SYNC GEN. SECTION (2/2) (W1) FLOWCHART FOR AU-63 AND AU-62 4-148

10-1. VIDEO PHASE ADJUSTMENT (FOR AU-65) 4-149
10-2. VIDEO PHASE ADJUSTMENT (FOR AU-63/62) 4-150
10-3. CK2 PHASE ADJUSTMENT 4-151

11. ENCODER (W2) BOARD (2/2)

— VISC CONTROL SECTION (FOR PAL) —

VISC CONTROL SECTION (2/2) (W2) FLOWCHART FOR AU-65, AU-63 AND AU-62, PAL MODEL 4-152
11-1. MACHINE CONDITION SETTING 4-153
11-2. VISC PHASE ADJUSTMENT (1) 4-154
11-3. VISC DC ADJUSTMENT 4-155
11-4. REFERENCE VOLTAGE ADJUSTMENT 4-155
11-5. VISC PHASE ADJUSTMENT (2) 4-156
11-6. VISC ADJUSTMENT 4-157
11-7. VISC CONTROL CONFIRMATION 4-158

12. MODULATION & DEMODULATION (W3) BOARD (2/2)

MODULATION & DEMODULATION SECTION (2/2) (W3) FLOWCHART FOR AU-65 4-160
MODULATION & DEMODULATION SECTION (2/2) (W3) FLOWCHART FOR AU-63 4-162
MODULATION & DEMODULATION SECTION (2/2) (W3) FLOWCHART FOR AU-62 4-163

12-1. Y SYNC TIP FREQUENCY ADJUSTMENT (FOR AU-65) 4-164
12-2. C BLANKING FREQUENCY ADJUSTMENT (FOR AU-65) 4-166
12-3. Y PLAYBACK EQ2 ADJUSTMENT (FOR AU-62/AU-65) 4-167

12-4. Y PLAYBACK EQ2 ADJUSTMENT (FOR AU-63) 4-168
12-5. Y PLAYBACK FREQUENCY RESPONSE (EQ1) ADJUSTMENT (FINE) 4-169
12-6. Y PLAYBACK EQ2, EQ1 CONFIRMATION 4-170
12-7. Y CH1 RECORDING CURRENT ADJUSTMENT (FOR AU-65) 4-172
12-8. Y CH2 RECORDING CURRENT ADJUSTMENT (FOR AU-65) 4-174
12-9. Y SELF RECORDING PLAYBACK FREQUENCY RESPONSE ADJUSTMENT (FOR AU-65) 4-176
12-10. Y HF LINEARITY ADJUSTMENT (1) 4-178
12-11. C PLAYBACK FREQUENCY RESPONSE ADJUSTMENT (FINE) (FOR AU-65/AU-62) 4-179
12-12. C PLAYBACK FREQUENCY RESPONSE ADJUSTMENT (FINE) (FOR AU-63) 4-179
12-13. C CH1 RECORDING CURRENT ADJUSTMENT (FOR AU-65) 4-180
12-14. C CH2 RECORDING CURRENT ADJUSTMENT (FOR AU-65) 4-182
12-15. C SELF RECORDING PLAYBACK FREQUENCY RESPONSE ADJUSTMENT (FOR AU-65) 4-184
12-16. Y PLAYBACK FM CARRIER LEVEL RE-ADJUSTMENT (FINE) 4-186
12-17. C PLAYBACK FM CARRIER LEVEL RE-ADJUSTMENT 4-186
12-18. C PLAYBACK RF LEVEL ADJUSTMENT 4-187
12-19. C PLAYBACK RF LEVEL ADJUSTMENT (FINE) 4-187
12-20. Y DROP OUT DETECTION LEVEL ADJUSTMENT (FOR AU-65/62) 4-188
12-21. Y DROP OUT DETECTION LEVEL ADJUSTMENT (FOR AU-63) 4-189
12-22. C DROP OUT DETECTION LEVEL ADJUSTMENT (FOR AU-65/62) 4-190
12-23. C DROP OUT DETECTION LEVEL ADJUSTMENT (FOR AU-63) 4-191
12-24. TRACKING METER ADJUSTMENT 4-192
12-25. Y S/H PULSE ADJUSTMENT (FOR PAL) 4-192
12-26. Y 3.375MHz B.P.F. ADJUSTMENT (FOR PAL) 4-193
12-27. Y AUTO EQ FREQUENCY CHARACTERISTIC ADJUSTMENT (1) (FOR AU-65/62 PAL) 4-193
12-28. Y AUTO EQ FREQUENCY CHARACTERISTIC ADJUSTMENT (2) (FOR AU-63 PAL) 4-195
12-29. Y AUTO EQ V MODE CONFIRMATION (FOR PAL) 4-196
12-30. Y SELF RECORDING AUTO EQ FREQUENCY CHARACTERISTIC CONFIRMATION (FOR AU-65 PAL) 4-196
12-31. C S/H PULSE ADJUSTMENT (FOR PAL) 4-197
12-32. C AUTO EQ FREQUENCY CHARACTERISTIC ADJUSTMENT (FOR PAL) 4-198
12-33. C AUTO EQ V MODE CONFIRMATION (FOR PAL) 4-199
12-34. C SELF RECORDING AUTO EQ FREQUENCY CHARACTERISTIC CONFIRMATION (FOR AU-65 PAL) 4-200

13. DECODER & CTCM (W4) BOARD (2/2)
DECODER & CTCM SECTION (2/2) (W4) FLOWCHART FOR AU-65 4-201

13-1. OH CHROMA LEVEL ADJUSTMENT (FOR AU-65) 4-203
13-2. MODULATION LEVEL ADJUSTMENT (FOR AU-65) 4-204
13-3. RESET WIDTH ADJUSTMENT (FOR AU-65) 4-204
13-4. DIFFERENTIAL GAIN & DIFFERENTIAL PHASE ADJUSTMENT (FOR AU-65 NTSC) 4-205
13-5. Y/C INPUT Y FREQUENCY RESPONSE ADJUSTMENT (FINE) (FOR AU-65 NTSC) 4-205
13-6. LINE INPUT Y FREQUENCY RESPONSE ADJUSTMENT (FINE) (FOR AU-65) 4-206

13-7. COMPONENT INPUT CARRIER BALANCE ADJUSTMENT (FINE) (FOR AU-65) 4-207
13-8. LINE INPUT CARRIER BALANCE ADJUSTMENT (FINE) (FOR AU-65) 4-207
13-9. LINE INPUT 1H DELAY CARRIER LEAKAGE ADJUSTMENT (FINE) (FOR AU-65 NTSC) 4-208
13-10. LINE INPUT 2H DELAY CARRIER LEAKAGE ADJUSTMENT (FINE) (FOR AU-65 NTSC) 4-208
13-11. 1H CHROMA LEVEL ADJUSTMENT (FOR AU-65) 4-209
13-12. CARRIER LEAKAGE ADJUSTMENT (FOR AU-65) 4-209
13-13. LINE INPUT CARRIER LEAKAGE ADJUSTMENT (FINE) (3) (FOR AU-65) 4-210
13-14(A). COMPONENT INPUT Y/C TIMING ADJUSTMENT (FINE) (BY USING WAVEFOME MONITOR) (FOR AU-65) 4-211
13-14(B). COMPONENT INPUT Y/C TIMING ADJUSTMENT (FINE) (BY USING OSCILLOSCOPE) (FOR AU-65) 4-212
13-15(A). LINE INPUT Y/C TIMING ADJUSTMENT (FINE) (BY USING WAVEFOME MONITOR) (FOR AU-65) 4-213
13-15(B). LINE INPUT Y/C TIMING ADJUSTMENT (FINE) (BY USING OSCILLOSCOPE) (FOR AU-65) 4-214
13-16. C SYNC POSITION ADJUSTMENT (FINE) (FOR AU-65) 4-215
13-17. LINE INPUT Y LEVEL ADJUSTMENT (FINE) (FOR AU-65) 4-215
13-18. Y/C INPUT Y LEVEL ADJUSTMENT (FINE) (FOR AU-65) 4-216
13-19. COMPONENT INPUT VECTOR ADJUSTMENT (FINE) (FOR AU-65) 4-217
13-20. LINE INPUT VECTOR ADJUSTMENT (FINE) (FOR AU-65) 4-218
13-21. Y/C INPUT VECTOR ADJUSTMENT (FINE) (FOR AU-65) 4-219
13-22. SCH ADJUSTMENT (FOR AU-65) 4-220
13-23. VISC PHASE ADJUSTMENT (FOR AU-65) 4-223
13-24. 13.5MHz PLL ADJUSTMENT (1) (FOR AU-65) 4-224
13-25. 13.5MHz PLL ADJUSTMENT (2) (FOR AU-65) 4-225
13-26. 13.5MHz PLL ADJUSTMENT (3) (FOR AU-65) 4-226

14. AUDIO (W6) BOARD (2/2)
— FM AUDIO SECTION —

FM AUDIO SECTION (W6) FLOWCHART FOR AU-65 4-227
FM AUDIO SECTION (W6) FLOWCHART FOR AU-63 AND AU-62 4-227

14-1. MACHINE CONDITION SETTING (FOR AU-65) 4-228
14-2. FM E-E OUTPUT LEVEL ADJUSTMENT (FOR AU-65) 4-228
14-3. FM METER LEVEL ADJUSTMENT (FOR AU-65) 4-229
14-4. FM CARRIER ADJUSTMENT (FOR AU-65) 4-230
14-5(A). FM RECORDING CURRENT ADJUSTMENT (BY USING SPECTRUM ANALYZER) (FOR AU-65) 4-231
14-5(B). FM RECORDING CURRENT ADJUSTMENT (BY USING OSCILLOSCOPE) (FOR AU-65) 4-232
14-6. FM PLAYBACK LEVEL ADJUSTMENT (FOR AU-65) 4-233
14-7. FM PLAYBACK OUTPUT LEVEL ADJUSTMENT (FOR AU-65) 4-233
14-8. FM REC/PLAYBACK LEVEL CONFIRMATION (FOR AU-65) 4-234
14-9. MACHINE CONDITION SETTING (FOR AU-63/62) 4-236
14-10. FM CARRIER ADJUSTMENT (FOR AU-62/63) 4-236
14-11. FM PLAYBACK LEVEL ADJUSTMENT (FOR AU-62/63) 4-237
14-12. FM PLAYBACK OUTPUT LEVEL ADJUSTMENT (FOR AU-62/63) 4-237

14-13. FM METER LEVEL ADJUSTMENT (FOR AU-62/63)........ 4-238

15. FRONT PANEL

15-1. ALARM OSC & LEVEL ADJUSTMENT........ 4-240

16. AU-F65 (OPTION TCG/TCR)

16-1. TRIMMER ADJUSTMENT........ 4-241

❶ LOCATION OF TEST POINTS & CONTROLS (B1, AU-F65)........ 4-242
❷ LOCATION OF TEST POINTS & CONTROLS (W1, W2)........ 4-243
❸ LOCATION OF TEST POINTS & CONTROLS (W3, W4)........ 4-244
❹ LOCATION OF TEST POINTS & CONTROLS (W5, W6)........ 4-245

SAFETY PRECAUTIONS

GENERAL GUIDELINES

1. When servicing, observe the original lead dress. If a short circuit is found, replace all parts which have been overheated or damaged by the short circuit.
2. After servicing, see to it that all the protective devices such as insulation barriers, insulation papers shields are properly installed.
3. After servicing, make the following leakage current checks to prevent the customer from being exposed to shock hazards.

LEAKAGE CURRENT COLD CHECK

1. Unplug the AC cord and connect a jumper between the two prongs on the plug.
2. Measure the resistance value, with an ohm meter, between the jumpered AC plug and each exposed metallic cabinet part on the equipment such as screwheads connectors, control shafts,etc. When the exposed metallic part has a return path to the chassis, the reading should be between 1M ohm and 5.2M ohm.
   When the exposed metal does not have a return path to the chassis, the reading must be

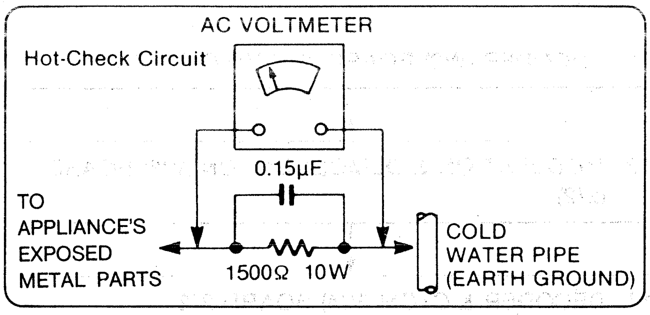
AC VOLTMETER
Hot-Check Circuit
0.15μF
TO APPLIANCE'S EXPOSED METAL PARTS
1500Ω 10W
COLD WATER PIPE (EARTH GROUND)

Figure 1

LEAKAGE CURRENT HOT CHECK (See Figure 1)

1. Plug the AC cord directly into the AC outlet. Do not use an isolation transformer for this check.
2. Connect a 1.5k ohm, 10 watts resistor, in parallel with a 0.15uF capacitor, between each exposed metallic part on the set and a good earth ground such as a water pipe, as shown in Figure 1.
3. Use an AC voltmeter, with 1000 ohms/volt or more sensitivity, to measure the potential across the resistor.
4. Check each exposed metallic part, and measure the voltage at each point.
5. Reverse the AC plug in the AC outlet repeat each of the above measurements.
6. The potential at any point should not exceed 0.75 volts RMS. A leakage current tester (Simpson Model 229 equivalent) may be used to make the hot checks, leakage current must not exceed 1/2 milliamp. In case a measurement is outside of the limits specified, there is a possibility of a shock hazard, and the equipment should be repaired and rechecked before it is returned to the customer.

ELECTROSTATICALLY SENSITIVE(ES) DEVICES

Some semiconductor (solid state) devices can be damaged easily by static electricity. Such components commonly are calledElectrostatically Sensitive (ES) Devices. Examples of typical ES devices are integrated circuits and some field–effect transistors and semiconductor "chip" components. The following techniques should be used to help reduce the incidence of component damage caused by static electricity.

1. Immediately before handling any semiconductor component or semiconductor–equipped assembly, drain off any electrostatic charge on your body by touching a known earth ground.
   Alternatively, obtain and wear a commercially available discharging wrist strap device, which should be removed for potential shock reasons prior to applying power to the unit under test.

2. After removing an electrical assembly equipped with ES devices, place the assembly on a conductive surface such as aluminum foil, to prevent electrostatic charge buildup or exposure of the assembly.

3. Use only a grounded–tip soldering iron to solder or unsolder ES devices.

4. Use only an anti–static solder removal device classified as "anti–static" can generate electrical charges sufficient to damage ES devices.

5. Do not use freon–propelled chemicals. These can generate electrical charges sufficient to damage ES devices.

6. Do not remove a replacement ES device from its protective package untilimmediately before you are ready to install it. (Most replacementES devices are packaged with leads eletcrically shorted together by conductive foam, aluminum foil or comparable conductive material).

7. Immediately before removing the protective material from the leads of replacement ES device, touch the protective material to the chassis or circuit assembly into which the device will be installed.

   CAUTION : Be sure no power is applied to the chassis or circuit, and observe all otner asfety precautions.

8. Minimize bodily motions when handling unpackaged replacement ES devices. (Otherwise harmless motion such as the brushing together of your clothes fabric or the lifting of your foot from a carpeted floor can generate static electricity sufficient to damage an ES device).

1. INFORMATION FOR ELECTRICAL ADJUSTMENT

This section describes adjustment procedures and methods of AU-65, AU-63 and AU-62. And this section is NTSC & PAL common used. Refer to this information before electrical adjustment.

1-1. MAIN ADJUSTMENT FLOWCHART

1) This Electrical Adjustment Procedures are common for the following 6 models, they are AU-65, AU-63 and AU-62 of NTSC and PAL. The correspond model is shown at the top of the each adjustment.

2) It is important to adjust each according to the correct steps which are shown as "Main Adjustment Flowchart" at below and "Section Adjustment Flowchart" at the top page of the each section.

MAIN ADJUSTMENT FLOWCHART

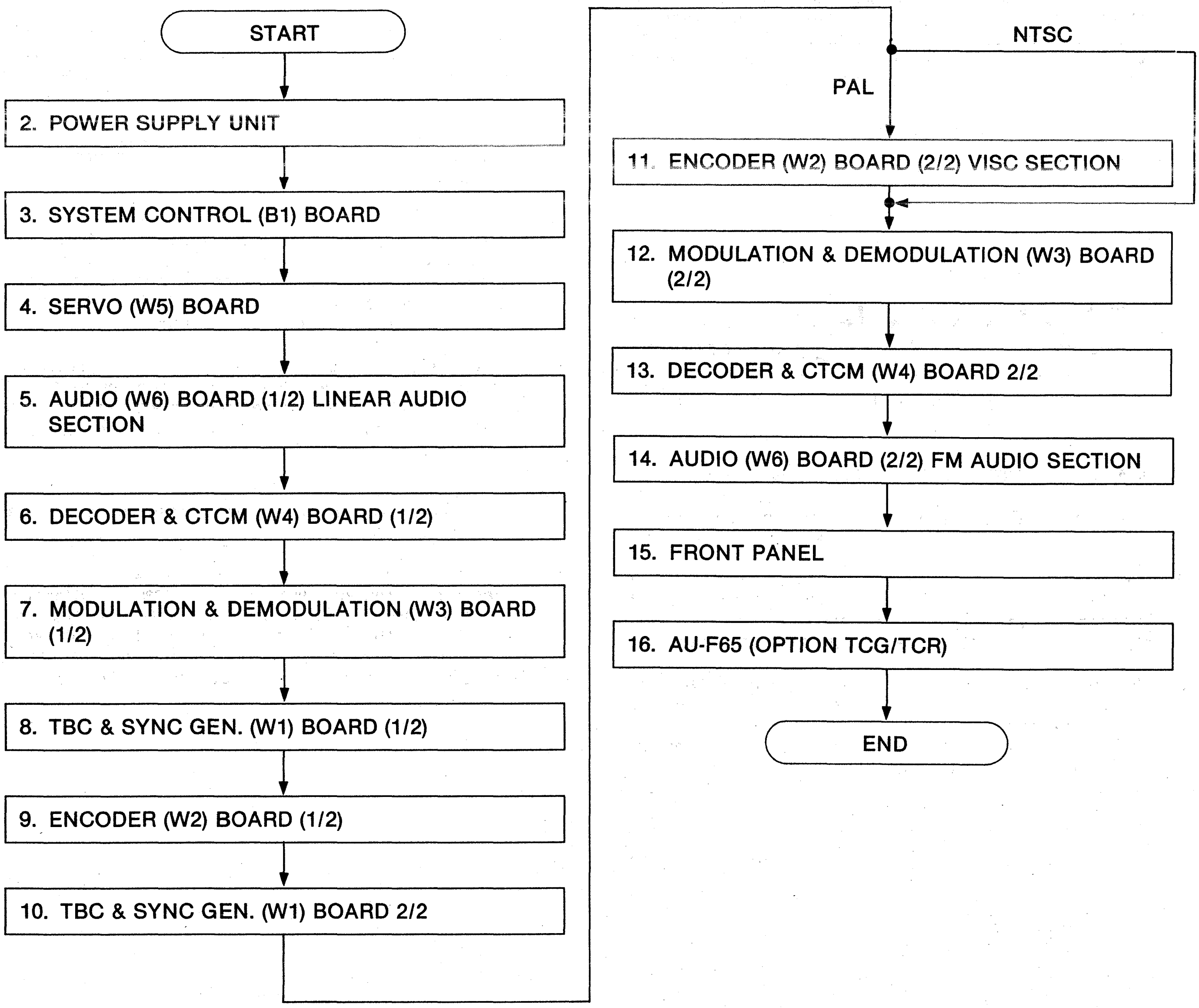
START
2. POWER SUPPLY UNIT
3. SYSTEM CONTROL (B1) BOARD
4. SERVO (W5) BOARD
5. AUDIO (W6) BOARD (1/2) LINEAR AUDIO SECTION
6. DECODER & CTCM (W4) BOARD (1/2)
7. MODULATION & DEMODULATION (W3) BOARD (1/2)
8. TBC & SYNC GEN. (W1) BOARD (1/2)
9. ENCODER (W2) BOARD (1/2)
10. TBC & SYNC GEN. (W1) BOARD 2/2
NTSC
PAL
11. ENCODER (W2) BOARD (2/2) VISC SECTION
12. MODULATION & DEMODULATION (W3) BOARD (2/2)
13. DECODER & CTCM (W4) BOARD 2/2
14. AUDIO (W6) BOARD (2/2) FM AUDIO SECTION
15. FRONT PANEL
16. AU-F65 (OPTION TCG/TCR)
END

1-2. RECOMMENDED TEST AND SERVICE EQUIPMENT

PART NO.	NAME	REMARK
TSG-130 (M-II TYPE)	COMPOSITE / COMPONENT / YC / Y CTCM SIGNAL GENERATOR	TEKTRONIX
1750	SCH METER (WFM, SCH, VECTOR etc.) FOR NTSC	TEKTRONIX
1751	SCH METER (WFM, SCH, VECTOR etc.) FOR PAL	TEKTRONIX
------	DIGITAL VOLT METER	
------	FREQUENCY COUNTER	1mHz Range ~
------	DUAL TRACE OSCILLOSCOPE	Frequency bandwidth more than 100 MHz
------	VTVM (ACVM) Frequency Band width 4Hz ~ 500KHz	Sound Technology or Audio Precision equivalent
------	SPECTRUM ANALYZER	Frequency bandwidth 10 Hz ~ 120 MHz
------	SINEWAVE SIGNAL GENERATOR	Frequency bandwidth 20 MHz
VFK0132	TENTELOMETER	TENTEL
VFM7087EAG	ALIGNMENT TAPE (※ 1) FOR NTSC MODEL	FOR AU-660/640/630/620 (NTSC)
VFM7180EG	ALIGNMENT TAPE (※ 1) FOR PAL MODEL	FOR AU-650B/640/630/620 (PAL)
	ALIGNMENT TAPE (※ 2)	PENDING
ET-100YC	S-VIDEO/BNC ADAPTOR	
VFK0601	EXTEMDER	FOR B1 BOARD AND AU-F65

NOTE

※1. This alignment tape is used for AU-660 or 650B/640/630/620
If the AU-65/63/62 is adjusted with this alignment tape (VFM7087EAG NTSC), (VFM7180EG PAL) the following adjustments can not be adjusted.

7-3	Y GROUP DELAY EQ ADJ.
7-4	C GROUP DELAY EQ ADJ.
7-9	C PLAYBACK FM B.P.F FREQUENCY RESPONSE
7-14-N or P	Y NL DE-EMPHASIS LIMITER LEVEL ADJ.
7-16-N or P	C NL DE-EMPHASIS LIMITER LEVEL ADJ.
7-35(A)or(B)	C REC FM B.P.F. FREQUENCY RESPONSE A
10-3	CK2 PHASE ADJ.
12-4-N or P	Y PLAYBACK EQ2 ADJ.
12-10-N or P	Y HF LINEARITY ADJ.
12-2~11-7	VISC ADJUSTMENT SECTION (PAL)

※2. This alignment tape is not available now.
When the alignmment tape is available for AU-65/63/62, Technical Information will be issued.

1-3. SIGNAL GENERATOR CONNECTION METHOD & INPUT SELECT SWITCH SETTING (FOR ELECTRICAL ADJUSTMENT)

CONNECTION METHOD (FOR AU-65)

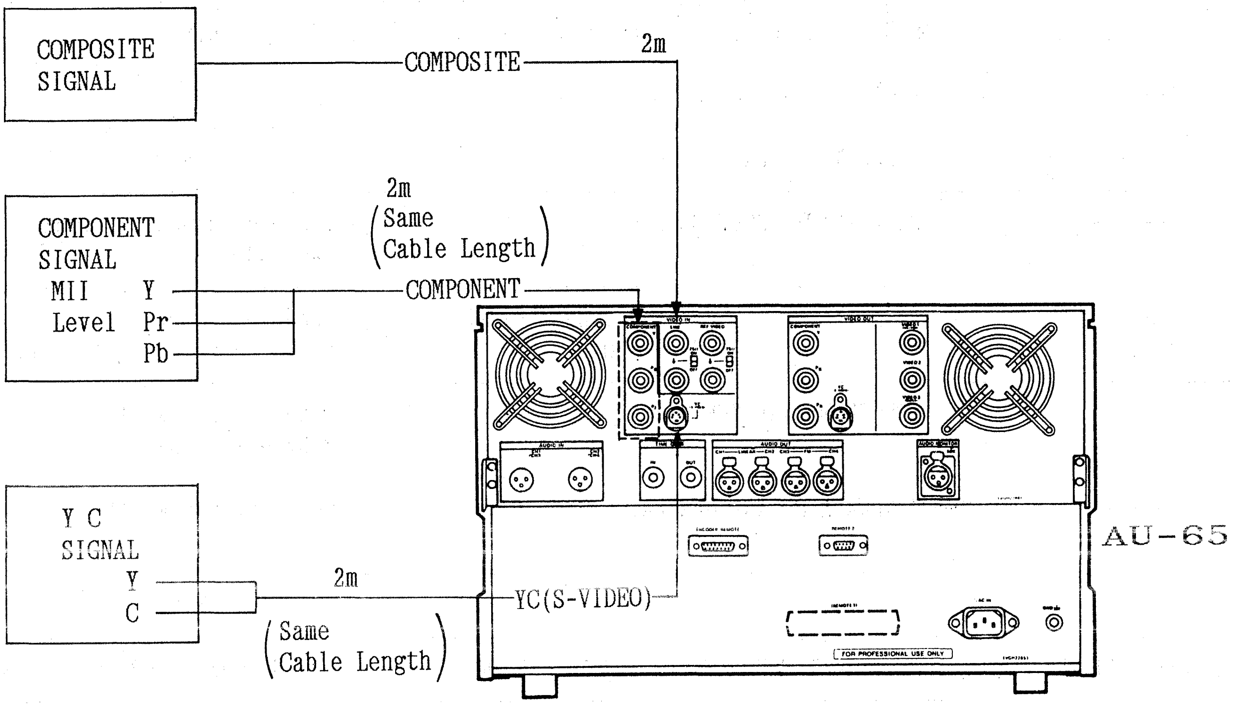

COMPOSITE SIGNAL
COMPOSITE
2m
COMPONENT SIGNAL
MII Level
Y
Pr
Pb
2m
(Same Cable Length)
COMPONENT
Y C SIGNAL
Y
C
2m
(Same Cable Length)
YC(S-VIDEO)
AU-65
FOR PROFESSIONAL USE ONLY

INPUT SELECT SWITCH SETTING (FOR AU-65)

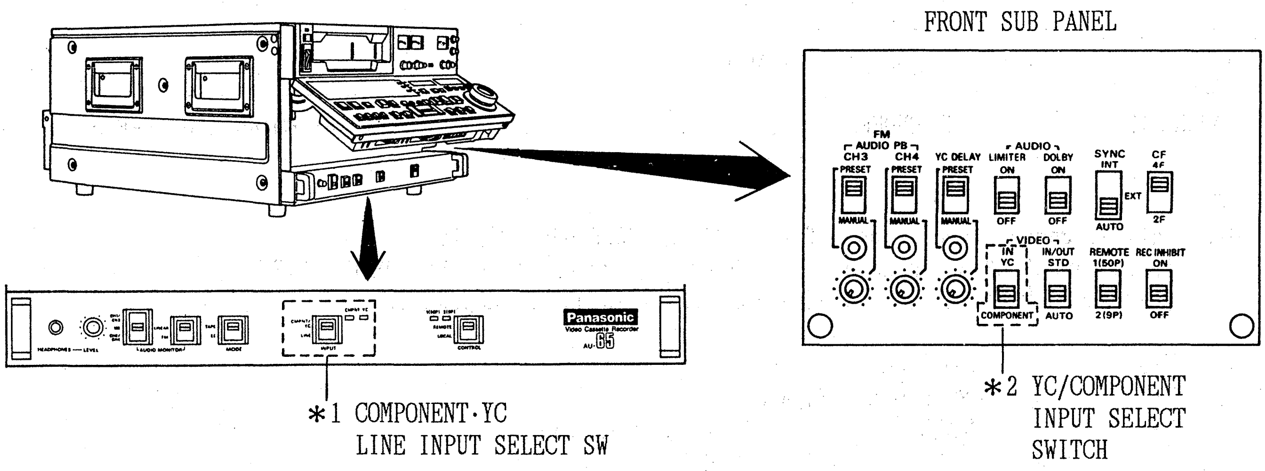

FRONT SUB PANEL
FM AUDIO PB
CH3
CH4
PRESET
MANUAL
YC DELAY
PRESET
MANUAL
AUDIO
LIMITER
ON
OFF
DOLBY
ON
OFF
SYNC
INT
EXT
AUTO
CF
4F
2F
VIDEO
IN
YC
COMPONENT
IN/OUT
STD
AUTO
REMOTE
1(50P)
2(9P)
REC INHIBIT
ON
OFF
Panasonic
AU-65
*1 COMPONENT·YC LINE INPUT SELECT SW
*2 YC/COMPONENT INPUT SELECT SWITCH

INPUT SIGNAL NAME	*1	*2
COMPOSITE	LINE POSITION	-----
COMPONENT	COMPONENT/YC POSITION	COMPONENT POSITION
Y C	COMPONENT/YC POSITION	YC POSITION

2. POWER SUPPLY UNIT

(POWER UNIT)

2-1. +5V ADJUSTMENT (FOR AU-65/63/62 NTSC & PAL)

TEST POINT	MODE	TAPE USED	M.EQ.	INPUT SIGNAL	ADJUSTMENT
TP19 (on W5)	REC (AU-65) PLAY (SU-62/63)	BLANKTAPE	Digital Voltage Meter	----------	R81 (+5V) (Top Panel of the Power Supply Box)

Step 1.

1. Adjust R81 so that the voltage at TP19 is +5 ± 0.2V (DC).

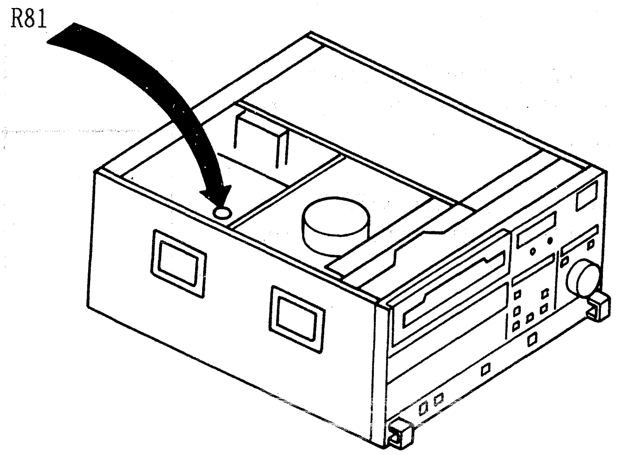

2-2. +7.5V ADJUSTMENT (FOR AU-65/63/62 NTSC & PAL)

(POWER UNIT)

TEST POINT	MODE	TAPE USED	M.EQ.	INPUT SIGNAL	ADJUSTMENT
CP53-3 (+7.5V OUTPUT)	------	-------	VOLTAGE METER	----------	R122 (+7.5)

Note:
This adjustment is done after repairing this power unit only.

Step 1.

1. Connect the Power Unit in outside of VTR.
2. Adjust R122 so that the voltage at CP53-3 (+7.5V output connector on

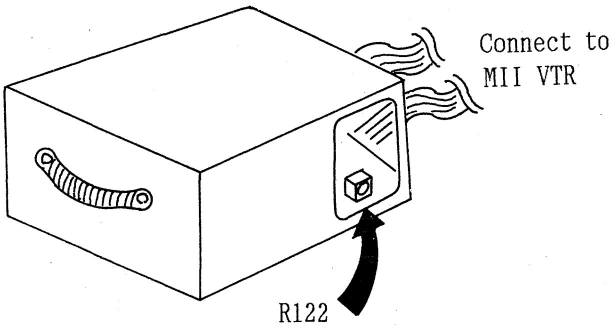

Specification
+7.5V terminal = 8.2 ± 0.002V
(8.2 = 7.5 + 10%)

3. SYSTEM CONTROL (B1) BOARD

3-1. SUPER IMPOSE HORIZONTAL POSITION ADJUSTMENT (FOR AU-65/63/62 NTSC & PAL)

TEST POINT	MODE	TAPE USED	M.EQ.	INPUT SIGNAL	ADJUSTMENT
VIDEO 3 OUT	E - E	-------	MONITOR TV	----------	VC1 (SUPER POSITION)

1. Open the Front Panel and press the MENU SW (SW3) on the System Control (B1) Board.
2. Adjust VC1 so that the MENU Picture is in the center of the monitor screen.

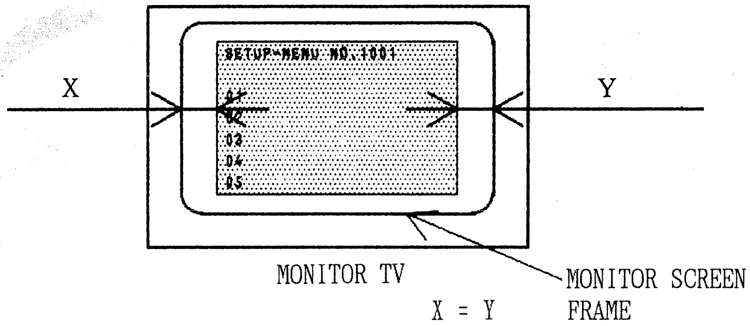
SETUP-MENU NO.1001
01
02
03
04
05
X
Y
MONITOR TV
X = Y
MONITOR SCREEN FRAME

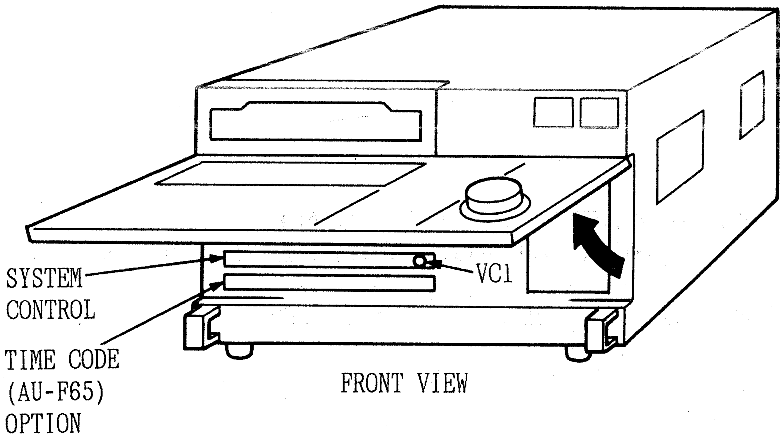
SYSTEM CONTROL
VC1
TIME CODE (AU-F65) OPTION
FRONT VIEW

4. SERVO (W5) BOARD

SERVO SECTION (W5) FLOWCHART FOR AU-62

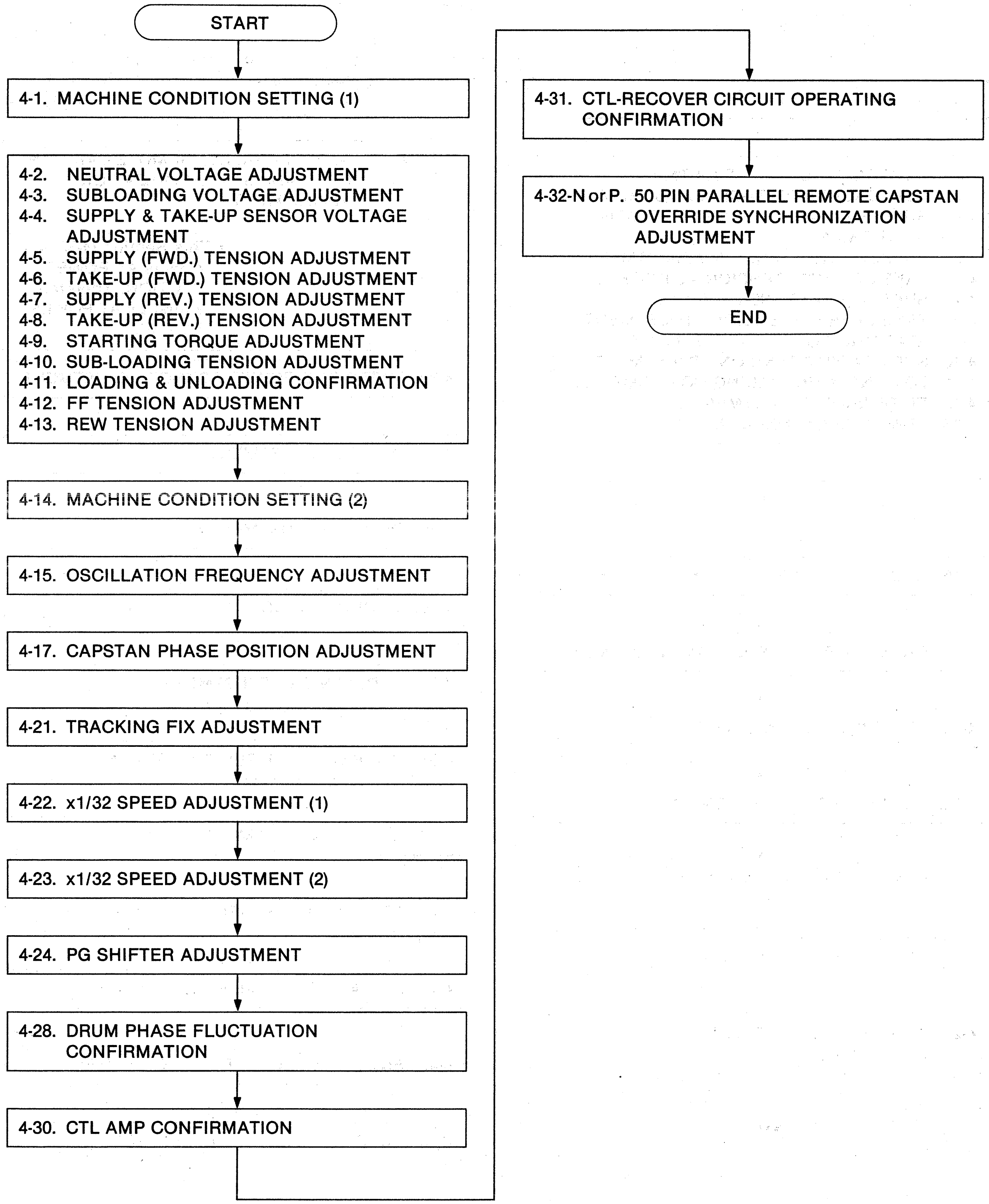
START
4-1. MACHINE CONDITION SETTING (1)
4-2. NEUTRAL VOLTAGE ADJUSTMENT
4-3. SUBLOADING VOLTAGE ADJUSTMENT
4-4. SUPPLY & TAKE-UP SENSOR VOLTAGE ADJUSTMENT
4-5. SUPPLY (FWD.) TENSION ADJUSTMENT
4-6. TAKE-UP (FWD.) TENSION ADJUSTMENT
4-7. SUPPLY (REV.) TENSION ADJUSTMENT
4-8. TAKE-UP (REV.) TENSION ADJUSTMENT
4-9. STARTING TORQUE ADJUSTMENT
4-10. SUB-LOADING TENSION ADJUSTMENT
4-11. LOADING & UNLOADING CONFIRMATION
4-12. FF TENSION ADJUSTMENT
4-13. REW TENSION ADJUSTMENT
4-14. MACHINE CONDITION SETTING (2)
4-15. OSCILLATION FREQUENCY ADJUSTMENT
4-17. CAPSTAN PHASE POSITION ADJUSTMENT
4-21. TRACKING FIX ADJUSTMENT
4-22. x1/32 SPEED ADJUSTMENT (1)
4-23. x1/32 SPEED ADJUSTMENT (2)
4-24. PG SHIFTER ADJUSTMENT
4-28. DRUM PHASE FLUCTUATION CONFIRMATION
4-30. CTL AMP CONFIRMATION
4-31. CTL-RECOVER CIRCUIT OPERATING CONFIRMATION
4-32-N or P. 50 PIN PARALLEL REMOTE CAPSTAN OVERRIDE SYNCHRONIZATION ADJUSTMENT
END

SERVO SECTION (W5) FLOWCHART FOR AU-63

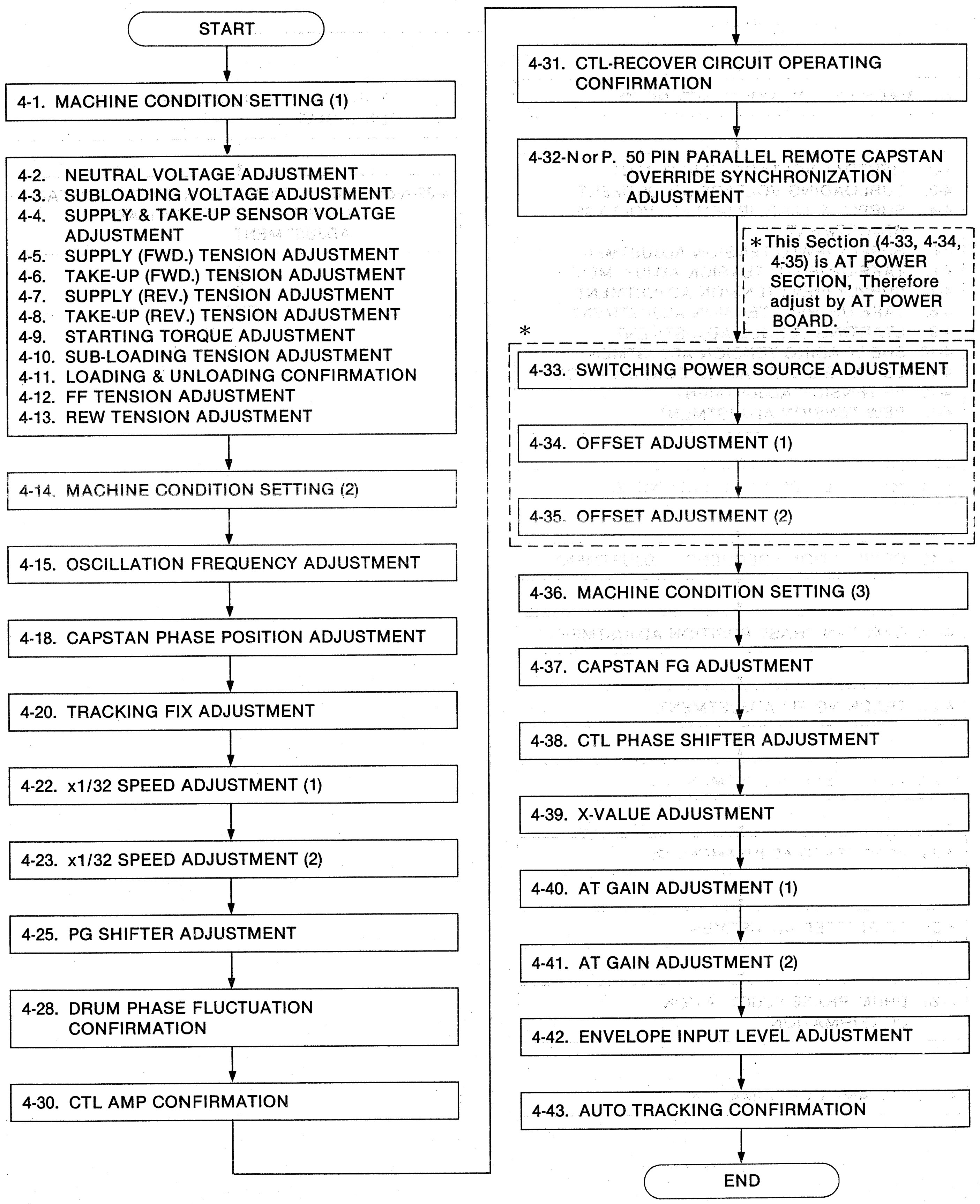
START
4-1. MACHINE CONDITION SETTING (1)
4-2. NEUTRAL VOLTAGE ADJUSTMENT
4-3. SUBLOADING VOLTAGE ADJUSTMENT
4-4. SUPPLY & TAKE-UP SENSOR VOLATGE ADJUSTMENT
4-5. SUPPLY (FWD.) TENSION ADJUSTMENT
4-6. TAKE-UP (FWD.) TENSION ADJUSTMENT
4-7. SUPPLY (REV.) TENSION ADJUSTMENT
4-8. TAKE-UP (REV.) TENSION ADJUSTMENT
4-9. STARTING TORQUE ADJUSTMENT
4-10. SUB-LOADING TENSION ADJUSTMENT
4-11. LOADING & UNLOADING CONFIRMATION
4-12. FF TENSION ADJUSTMENT
4-13. REW TENSION ADJUSTMENT
4-14. MACHINE CONDITION SETTING (2)
4-15. OSCILLATION FREQUENCY ADJUSTMENT
4-18. CAPSTAN PHASE POSITION ADJUSTMENT
4-20. TRACKING FIX ADJUSTMENT
4-22. x1/32 SPEED ADJUSTMENT (1)
4-23. x1/32 SPEED ADJUSTMENT (2)
4-25. PG SHIFTER ADJUSTMENT
4-28. DRUM PHASE FLUCTUATION CONFIRMATION
4-30. CTL AMP CONFIRMATION
4-31. CTL-RECOVER CIRCUIT OPERATING CONFIRMATION
4-32-N or P. 50 PIN PARALLEL REMOTE CAPSTAN OVERRIDE SYNCHRONIZATION ADJUSTMENT
∗This Section (4-33, 4-34, 4-35) is AT POWER SECTION, Therefore adjust by AT POWER BOARD.
∗
4-33. SWITCHING POWER SOURCE ADJUSTMENT
4-34. OFFSET ADJUSTMENT (1)
4-35. OFFSET ADJUSTMENT (2)
4-36. MACHINE CONDITION SETTING (3)
4-37. CAPSTAN FG ADJUSTMENT
4-38. CTL PHASE SHIFTER ADJUSTMENT
4-39. X-VALUE ADJUSTMENT
4-40. AT GAIN ADJUSTMENT (1)
4-41. AT GAIN ADJUSTMENT (2)
4-42. ENVELOPE INPUT LEVEL ADJUSTMENT
4-43. AUTO TRACKING CONFIRMATION
END

SERVO SECTION (W5) FLOWCHART FOR AU-65

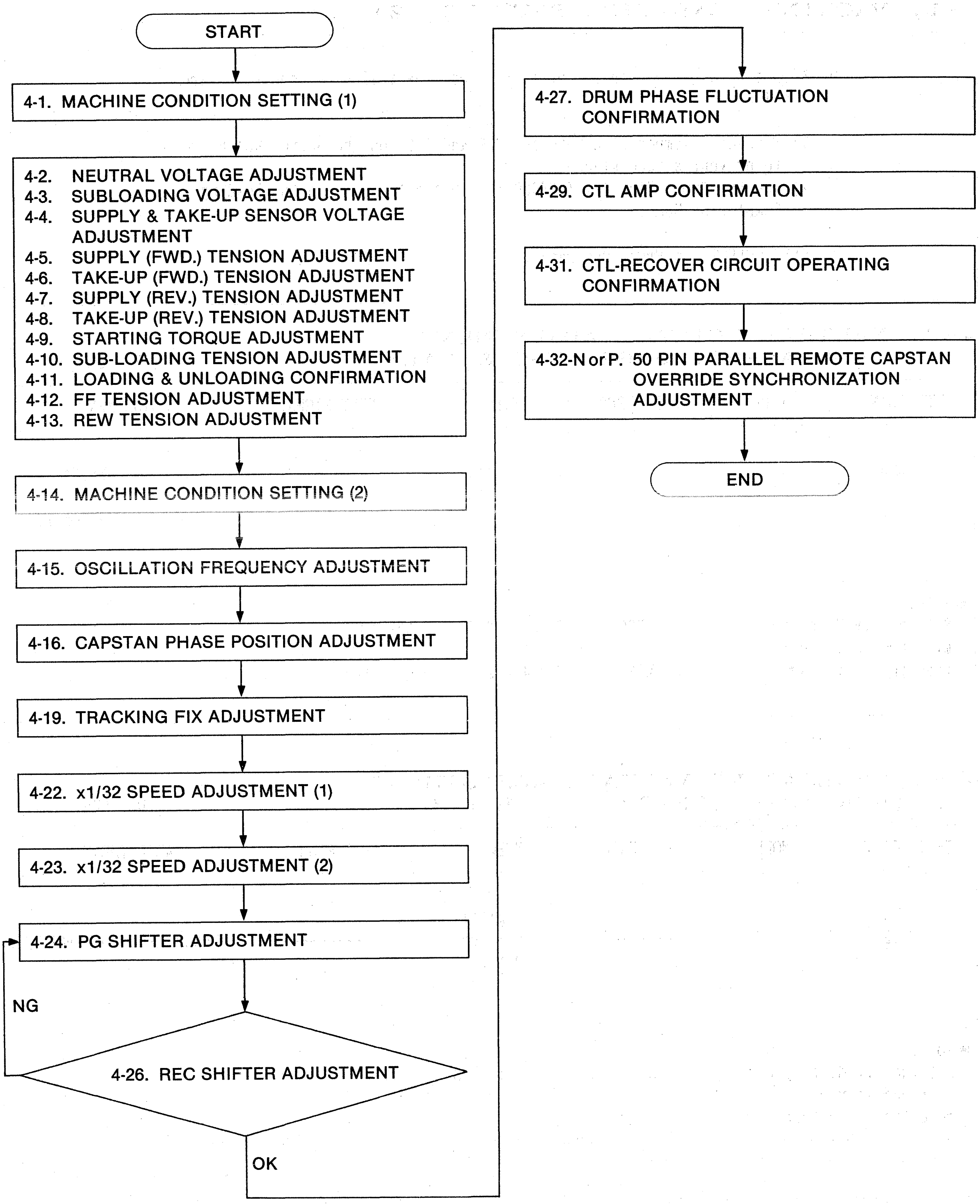
START
4-1. MACHINE CONDITION SETTING (1)
4-2. NEUTRAL VOLTAGE ADJUSTMENT
4-3. SUBLOADING VOLTAGE ADJUSTMENT
4-4. SUPPLY & TAKE-UP SENSOR VOLTAGE ADJUSTMENT
4-5. SUPPLY (FWD.) TENSION ADJUSTMENT
4-6. TAKE-UP (FWD.) TENSION ADJUSTMENT
4-7. SUPPLY (REV.) TENSION ADJUSTMENT
4-8. TAKE-UP (REV.) TENSION ADJUSTMENT
4-9. STARTING TORQUE ADJUSTMENT
4-10. SUB-LOADING TENSION ADJUSTMENT
4-11. LOADING & UNLOADING CONFIRMATION
4-12. FF TENSION ADJUSTMENT
4-13. REW TENSION ADJUSTMENT
4-14. MACHINE CONDITION SETTING (2)
4-15. OSCILLATION FREQUENCY ADJUSTMENT
4-16. CAPSTAN PHASE POSITION ADJUSTMENT
4-19. TRACKING FIX ADJUSTMENT
4-22. x1/32 SPEED ADJUSTMENT (1)
4-23. x1/32 SPEED ADJUSTMENT (2)
4-24. PG SHIFTER ADJUSTMENT
NG
4-26. REC SHIFTER ADJUSTMENT
OK
4-27. DRUM PHASE FLUCTUATION CONFIRMATION
4-29. CTL AMP CONFIRMATION
4-31. CTL-RECOVER CIRCUIT OPERATING CONFIRMATION
4-32-N or P. 50 PIN PARALLEL REMOTE CAPSTAN OVERRIDE SYNCHRONIZATION ADJUSTMENT
END

4. SERVO (W5) BOARD

4-1. MACHINE CONDITION SETTING (2)

1. When the Cassette Compartment is removed, the following conditions are required.

   1) Connect a jumper wire between TP19 and TP20 on the Servo (W5) Board to prevent a tape slack.
   2) Use the Dummy Plug (1) (VFK0361) to place the unit in the Loading Completion Mode.

2. SYNC SELECT (on Front Sub Panel) : AUTO Side

4-2. NEUTRAL VOLTAGE ADJUSTMENT (FOR AU-65/63/62 NTSC & PAL)

(W5: SERVO)

TEST POINT	MODE	TAPE USED	M.EQ.	INPUT SIGNAL	ADJUSTMENT
TP303 TP304	EJECT	-------	Digital Voltage Meter	----------	VR302 (S TENSION FIX) VR303 (T TENSION FIX)

∗Note:
Set the D.V.M to the mV range so you can read the ± voltage.

⊘ VR302 TP303 = 2.5 ± 0.05V (DC)

⊘ VR303 TP304 = 2.5 ± 0.05V (DC)

4-3. SUBLOADING VOLTAGE ADJUSTMENT (FOR AU-65/63/62 NTSC & PAL)

(W5: SERVO)

TEST POINT	MODE	TAPE USED	M.EQ.	INPUT SIGNAL	ADJUSTMENT
TP312	EJECT	-------	Digital Voltage Meter	----------	VR308 (SUB LOAD VOLTAGE)

∗Note:
Set the D.V.M. to the mV range so you can read the ± voltage.

SPECIFICATION : 35 ± 1mV

4-4. SUPPLY & TAKE-UP SENSOR VOLTAGE ADJUSTMENT
(FOR AU-65/63/62 NTSC & PAL)

(W5 SERVO)

TEST POINT	MODE	TAPE USED	M.EQ.	INPUT SIGNAL	ADJUSTMENT
TP303 TP304	EJECT ↓ STOP (LOADING)	-------	Digital Voltage Meter	----------	S & T MAGNETIC SENSOR BASE UNITS

Step 1.
MACHINE CONDITION

1. Remove the Cassette Compartment.
2. Refer to Set Up Conditions at the beginning of this SECTION (SERVO - W5 Machine Condition 4-1).

Step 2

1. Place the Mechanical Neutral Plate as shown in figure.

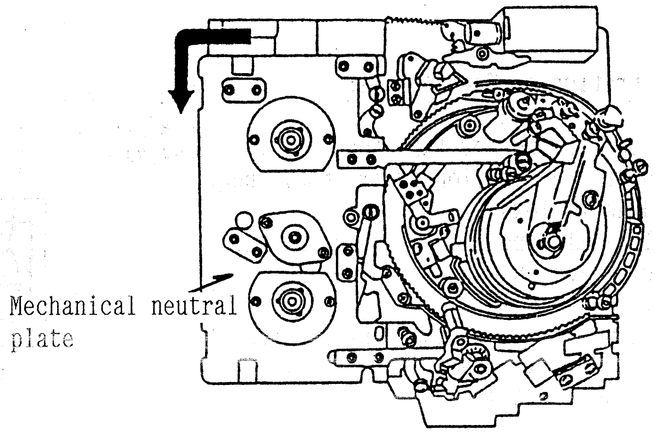
Mechanical neutral plate

Step 3.

1. D. V. M. : TP303
2. Confirm the DC voltage is 2500mV (2.5V) ± 50mV (DC).
3. If it is not, loosen the 2 screws and insert the eccentric screw driver into Hole (B).
4. Adjust the Supply Magnetic Sensor Base Unit so that the DC voltage is 2500mV (2.5V) ± 50mV (DC).

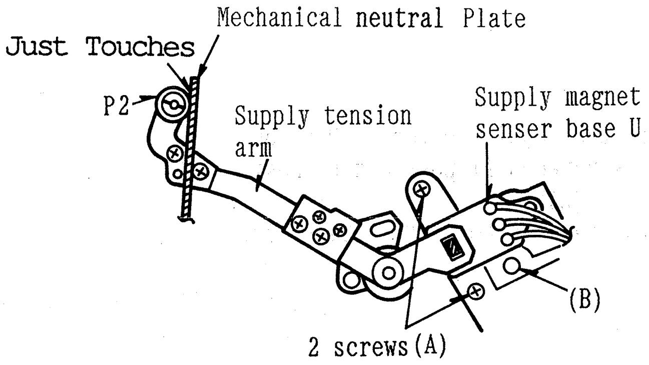
Mechanical neutral Plate
Just Touches
P2
Supply tension arm
Supply magnet senser base U
(B)
2 screws (A)

Step 4.

1. D. V. M. : TP304
2. Confirm the DC voltage is 2500mV (2.5V) ± 50mV (DC).
3. If it is not, insert the eccentric screw driver into Hole (B).
4. Adjust the Take-up Magnetic Sensor Base Unit so that the DC voltage is 2500mV (2.5V) ± 50mV (DC).

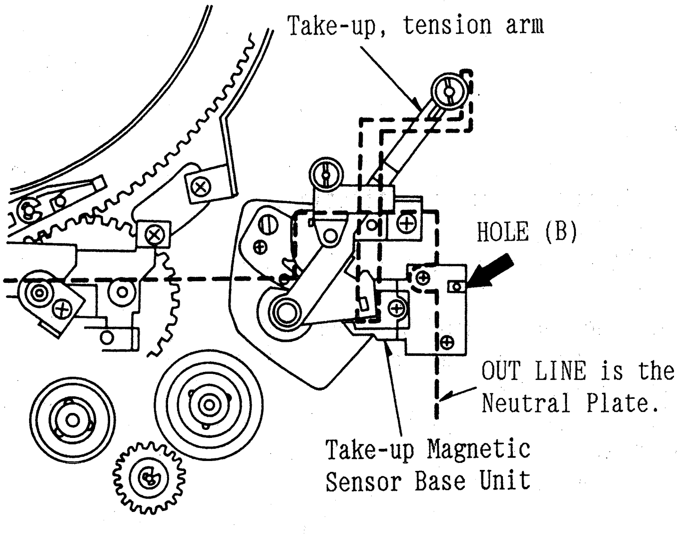
Take-up, tension arm
HOLE (B)
OUT LINE is the Neutral Plate.
Take-up Magnetic Sensor Base Unit

4-5. SUPPLY (FWD.) TENSION ADJUSTMENT (FOR AU-65/63/62 NTSC & PA1)

(W5 SERVO)

TEST POINT	MODE	TAPE USED	M.EQ.	INPUT SIGNAL	ADJUSTMENT
"A" (P1 ~ P2)	PLAY	BLANK 90 min. TAPE BEGINNING PORTION	TENSION METER	----------	SUPPLY STOPPER PIN BASE UNIT

Step 1.
MACHINE CONDITION

1. Remove the Cassette Compartment.
2. Refer to Set Up Conditions at the beginning of this SECTION (SERVO - W5 Machine Condition 4-1).

Step 2.

Calibration of Tentelometer

1. Before performing the tape tension adjustment. The Tension Meter should be checked as follows.
2. Use MII Metal Tape and a 1 ounce weight.
3. Pull up a tape by hand as shown in figure.
4. Adjust a hex screw on the Tension Meter so that the tension meter reading is set for a 1 ounce (28.34g).

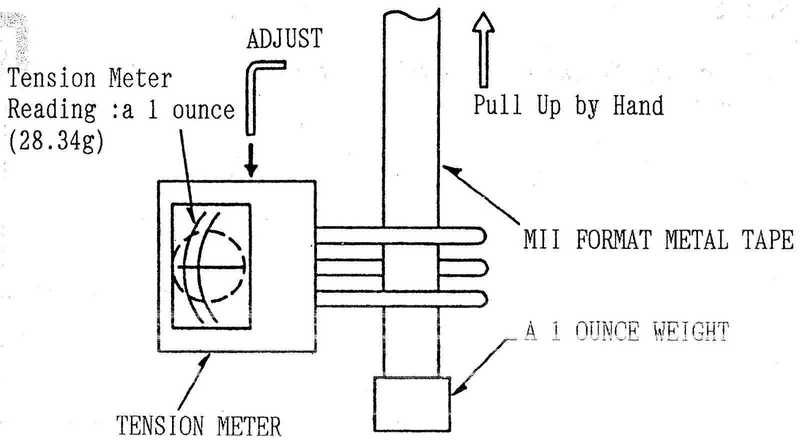
ADJUST
Tension Meter
Reading :a 1 ounce
(28.34g)
Pull Up by Hand
MII FORMAT METAL TAPE
A 1 OUNCE WEIGHT
TENSION METER

STEP 3.

1. Insert the tension meter to Portion "A" that is between P1 post and P2 post.
2. Mode : PLAY
3. Set the tension for "A" = 23g ± 2g.

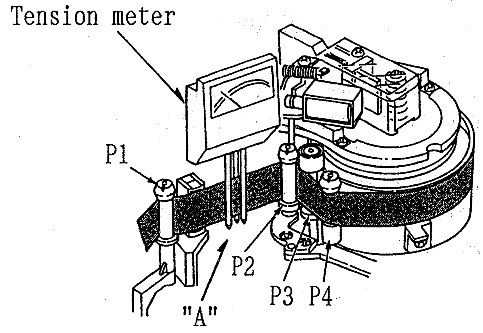
Tension meter
P1
P2
P3 P4
"A"

A = 23g ± 2g

Step 4.

1. If it is not within specification, loosen the screw (A).
2. Insert the eccentric screw driver into Hole (B).
3. Adjust the position of S. Stopper Pin Base Unit so that the tension is 23g ± 2g at portion "A".
4. Finally, tighten the screw (A).
5. Reconfirm the tension after the screw (A) is tightened.

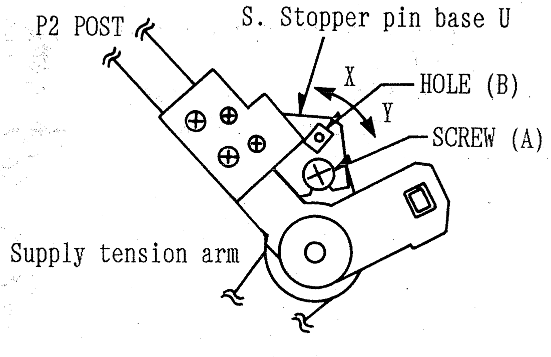
P2 POST
S. Stopper pin base U
X
Y
HOLE (B)
SCREW (A)
Supply tension arm

4-6. TAKE-UP (FWD.) TENSION ADJUSTMENT (FOR AU-65/63/62 NTSC & PAL)

(W5 SERVO)

TEST POINT	MODE	TAPE USED	M.EQ.	INPUT SIGNAL	ADJUSTMENT
"A" (P9 ~ P10)	PLAY	BLANK 90 min. TAPE BEGINNING PORTION	TENSION METER	----------	TAKE-UP STOPPER PIN BASE UNITS

Step 1.
MACHINE CONDITION

1. Remove the Cassette Compartment.
2. Refer to Set Up Conditions at the beginning of this SECTION (SERVO - W5 Machine Condition 4-1).

Step 2.

1. Insert the tension meter to Portion "A" that is between P9 post and P10 post.
2. Mode : PLAY
3. Confirm that the tension meter indicates 23g ± 2g.

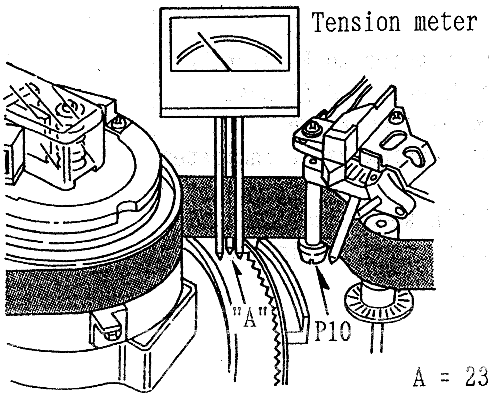

A = 23g ± 2g

Step 3.

1. If it is not within specification, loosen the screw (A).
2. Insert the eccentric screw driver into Hole (B).
3. Adjust the position of T. Stopper Pin Base Unit so that the tension is 23g ± 2g.
4. Finally, tighten the screw (A).
5. Reconfirm the tension after the screw (A) is tightened.

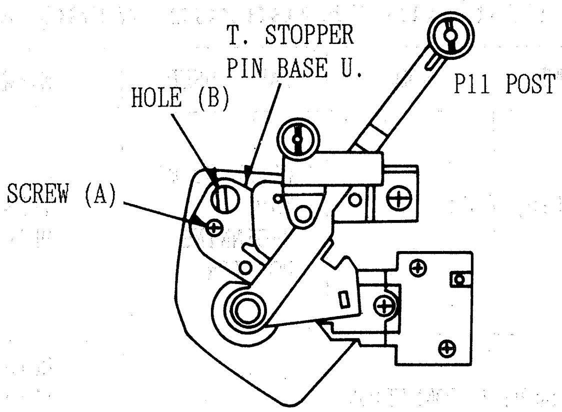

4-7. SUPPLY (REV.) TENSION ADJUSTMENT (FOR AU-65/63/62 NTSC &PAL)

(W5 SERVO)

TEST POINT	MODE	TAPE USED	M.EQ.	INPUT SIGNAL	ADJUSTMENT
"A" (P1 ~ P2)	SHTL × -1	BLANK 90 min. TAPE BEGINNING PORTION	TENSION METER	----------	VR309 (S. REV. TENSION)

Step 1. MACHINE CONDITION	1. Refer to Set Up Conditions at the beginning of this SECTION (SERVO - W5 Machine Condition 4-1).

Step 2.

1. Insert the tension meter to Portion "A" that is between P1 post and P2 post.
2. Mode : SHTL × -1 (See Above)
3. Confirm that the tension meter indicates 25 ± 1 (g).
4. If it is not within specification, adjust VR309 so that the tension is 25 ± 1 (g).

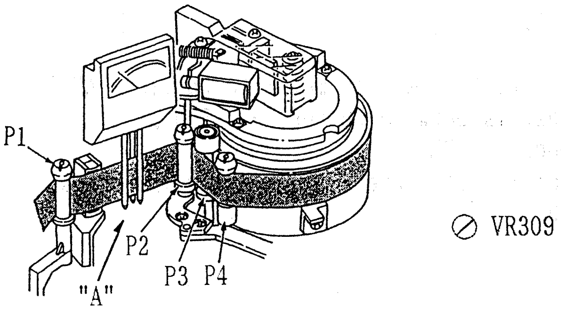

A = 25 ± 1 (g)

4-8. TAKE-UP (REV.) TENSION ADJUSTMENT (FOR AU-65/63/62 NTSC & PAL)

(W5 SERVO)

TEST POINT	MODE	TAPE USED	M.EQ.	INPUT SIGNAL	ADJUSTMENT
"A" (P9 ~ P10)	SHTL × -1	BLANK 90 min. TAPE BEGINNING PORTION	TENSION METER	----------	VR305 (T. REV. TENSION)

Step 1. MACHINE CONDITION	1. Refer to Set Up Conditions at the beginning of this SECTION (SERVO - W5 Machine Condition 4-1).

Step 2.

1. Insert the tension meter to Portion "A" that is between P9 post and P10 post.
2. Mode : SHTL × -1 (See Above)
3. Confirm that the tension meter indicates 30 ~ 35 (g).
4. If it is not within specification, adjust VR309 so that the tension is 30 ~ 35 (g).

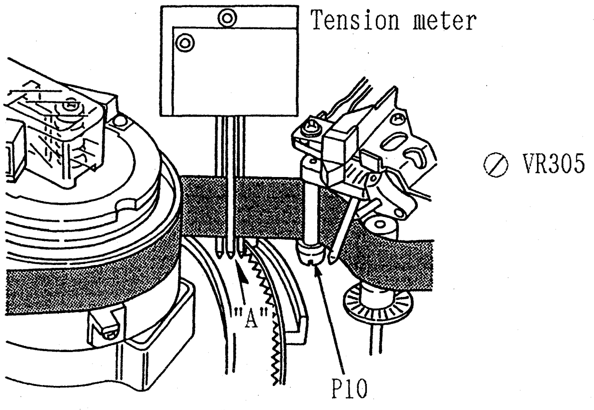

A = 30 ~ 35 (g)

4-9. STARTING TORQUE ADJUSTMENT
(FOR AU-65/63/62 NTSC & PAL)

(W5 SERVO)

TEST POINT	MODE	TAPE USED	M.EQ.	INPUT SIGNAL	ADJUSTMENT
TP302 (HOT) TP310 (GND)	PLAY	BLANK 90 min. TAPE BEGINNING PORTION	Digital Volt Meter	----------	VR301 (START TRQ)

Step 1. MACHINE CONDITION	Refer to Set Up Conditions at the beginning of this SECTION (SERVO - W5 Machine Condition 4-1).
Note: Measure the voltage after the voltage is stabilized. 1. Adjust VR301 so that the voltage at TP302 is -200mV ± 5mV.	⊘ VR301 (TP302) - (TP310) = -200mV ± 5mV

4-10. SUB-LOADING TENSION ADJUSTMENT
(FOR AU-65-63/62 NTSC & PAL)

(W5 SERVO)

TEST POINT	MODE	TAPE USED	M.EQ.	INPUT SIGNAL	ADJUSTMENT
"A" (P9 ~ P10)	PLAY	BLANK 90 min. TAPE BEGINNING PORTION	TENSION METER	----------	VR307 (LOAD TENSION)

Step 1. MACHINE CONDITION	1. Refer to Set Up Conditions at the beginning of this SECTION (SERVO - W5 Machine Condition 4-1). 2. Connect a jumper wire between TP309 and TP311 to make a sub-loading condition after the tape is Loaded.
Step 2. 1. Insert the tension meter to Portion "A" that is between P9 post and P10 post. 2. Mode : PLAY 3. Confirm that the tension meter indicates 8 ~ 10 (g). 4. If it is not within the specification, adjust VR307 so that the tension is 8 ~ 10 (g). 5. Finally, disconnect the jumper wire between TP309 and TP311.	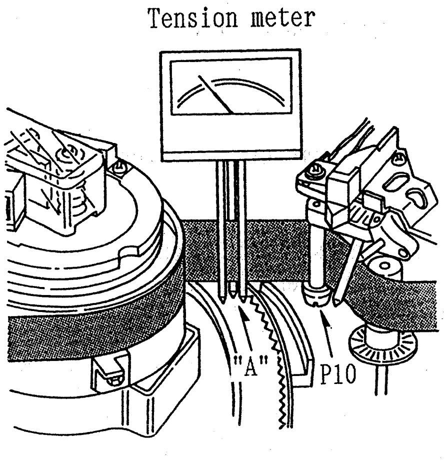 ⊘ VR307 A = 8 ~ 10 (g)

4-11. LOADING & UNLOADING CONFIRMATION
(FOR AU-65/63/62 NTSC & PAL)

(W5 SERVO)

TEST POINT	MODE	TAPE USED	M.EQ.	INPUT SIGNAL	ADJUSTMENT
-------	STOP ↓ ↑ EJECT	BLANK 90 min. TAPE	--------	----------	------------

Step 1.

1. Confirm that the tape is going to Loading mode and Unloading mode properly when the unit is placed in STOP and EJECT at several time.
2. Power Switch : OFF (EJECT mode)
3. Power Switch : ON
4. Confirm STEP 1 again.

Step 2.

1. If it is not, readjust the following items.
   - A. Section 3 - 2 (Sub - Loading Voltage Adjustment)
   - B. Section 3 - 9 (Sub - Loading Tension Adjustment)
2. Repeat STEP 2.

4-12. FF TENSION ADJUSTMENT
(FOR AU-65/63/62 NTSC & PAL)

(W5 SERVO)

TEST POINT	MODE	TAPE USED	M.EQ.	INPUT SIGNAL	ADJUSTMENT
"A" (P1 ~ P2)	FF	BLANK 90 min. TAPE BEGINNING PORTION	TENSION METER	----------	VR304 (S. FF TENSION)

Step 1.

1. Insert the tension meter to Portion "A" that is between P1 post and P2 post.
2. Mode : FF
3. Confirm that the tension meter indicates 15 ~ 20 (g).
4. If it is not within the specification, adjust VR304 so that the tension is 15 ~ 20 (g).

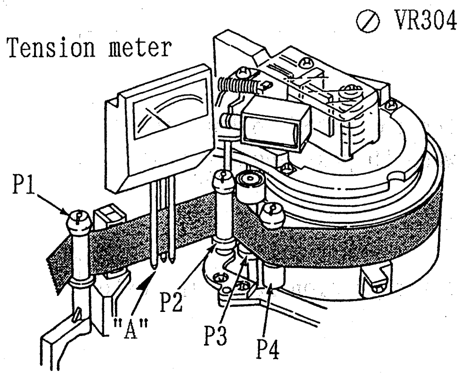

A = 15 ~ 20 (g)

4-13. REW TENSION ADJUSTMENT (FOR AU-65/63/62 NTSC & PAL)

(W5 SERVO)

TEST POINT	MODE	TAPE USED	M.EQ.	INPUT SIGNAL	ADJUSTMENT
"A" (P1 ~ P2)	REW	BLANK 90 min. TAPE END OF TAPE PORTION	TENSION METER	----------	VR306 (S. REW TENSION)

Step 1.

1. Insert the tension meter to Portion "A" that is between P1 post and P2 post.
2. Mode : REW
3. Confirm that the tension meter indicates 40 ~ 50 (g).
4. If it is not within specification, adjust VR306 so that the tension is 40 ~ 50 (g).

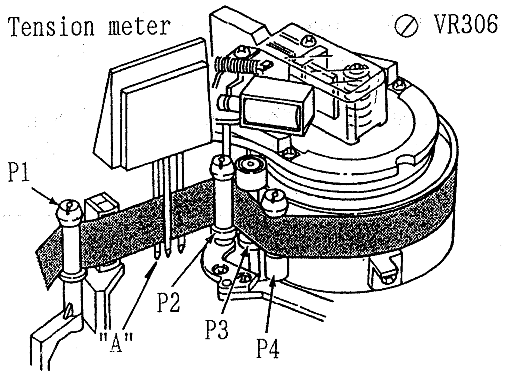

A = 40 ~ 50 (g)

4-14. MACHINE CONDITION SETTING (2) (FOR AU-63 AUTO TRACKING)

(W5 AT)

Set the switches on the Front Sub Panel as follows except special condition.

1. MODE SELECT : EE (FOR AU-65)
2. COLOR FRAMING : 2FMode
3. AT POWER ------------- When servo section is adjusted, for AU-63 please disconnect the connector P10 on the AT Power Board to preset the piezo head for fix AT.

4-15. OSCILLATION FREQUENCY ADJUSTMENT (FOR AU-65/63/62 NTSC & PAL)

(W5 SERVO)

TEST POINT	MODE	TAPE USED	M.EQ.	INPUT SIGNAL	ADJUSTMENT
TP103	PLAY	PRE-RECORDED 90 min. TAPE (MIDDLE PORTION)	FREQUENCY COUNTER	----------	VC101
Step 1. MACHINE CONDITION			Refer to Set Up Conditions at 4-14 Machine Condition Setting (2).		

NTSC : ⊘ VC101 SPECIFICATION : 3579545 ± 50 [Hz]
PAL : ⊘ VC101 SPECIFICATION : 2985940 ± 50 [Hz]

4-16. CAPSTAN PHASE POSITION ADJUSTMENT (FOR AU-65 NTSC & PAL)

(W5 SERVO)

TEST POINT	MODE	TAPE USED	M.EQ.	INPUT SIGNAL	ADJUSTMENT
TP105 TP102	REC	BLANK TAPE (MIDDLE PORTION)	OSCILLOSCOPE	COLOR BAR	VR103 (CAP REF.)
Step 1. MACHINE CONDITION			Refer to Set Up Conditions at 4-14 Machine Condition Setting (2).		

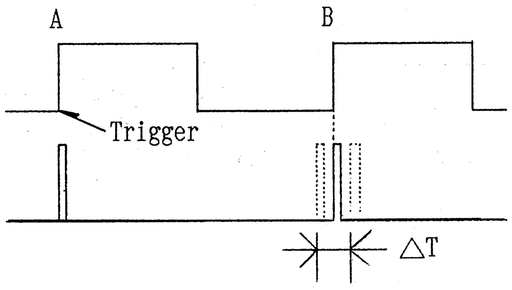

⊘ VR103 ΔT = 0 ± 70 [μsec]

Trigger = "A" point of TP105

4-17. CAPSTAN PHASE POSITION ADJUSTMENT
(FOR AU-62 NTSC & PAL)

(W5 SERVO)

TEST POINT	MODE	TAPE USED	M.EQ.	INPUT SIGNAL	ADJUSTMENT
TP105 TP102	PLAY	PRE-RECORDED 90 min. TAPE (MIDDLE PORTION)	OSCILLOSCOPE	----------	VR103 (CAP REF.)
Step 1. MACHINE CONDITION			Refer to Set Up Conditions at 4-14 Machine Condition Setting (2)		

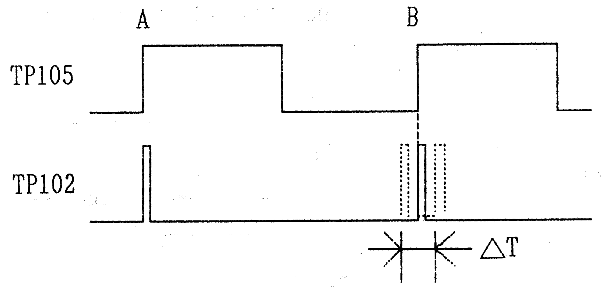

⊘ VR103 ΔT = 0 ± 70 [μsec]

Trigger = "A" point of TP105

4-18. CAPSTAN PHASE POSITION ADJUSTMENT
(FOR AU-63 NTSC & PAL)

(W5 SERVO)

TEST POINT	MODE	TAPE USED	M.EQ.	INPUT SIGNAL	ADJUSTMENT
TP3 TP102	PLAY	PRE-RECORDED 90 min. TAPE (MIDDLE PORTION)	OSCILLOSCOPE	----------	VR103 (CAP REF.)
Step 1. MACHINE CONDITION			Refer to Set Up Conditions at 4-14 Machine Condition Setting (2).		

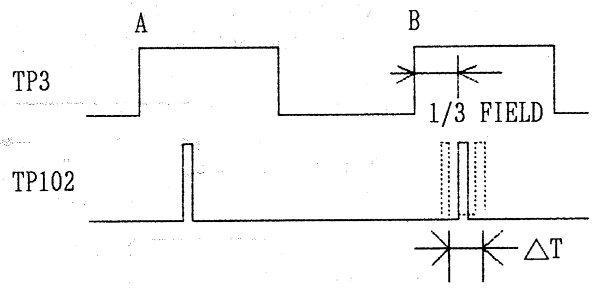

⊘ VR103 ΔT = 0 ± 70 [μsec]

Trigger = "A" point of TP3

4-19. TRACKING FIX ADJUSTMENT
(FOR AU-65 NTSC & PAL)

(W5 SERVO)

TEST POINT	MODE	TAPE USED	M.EQ.	INPUT SIGNAL	ADJUSTMENT
TP3 TP110	SELF REC/PB	BLANK TAPE	OSCILLOSCOPE	COMPONENT COLOR BAR	VR3 (R/P TRACK)

Step 1. MACHINE CONDITION	1. FRONT PANEL TRACKING VR : DETENT POSITION 2. Refer to Set Up Conditions at 4-14 Machine Condition Setting (2).
Step 2. SCOPE CH1 : TP3 (Trigger) CH2 : TP110	⊘ VR3 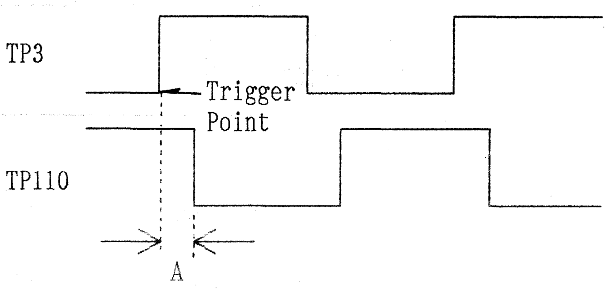 A = 0 ± 100 [μsec]

4-20. TRACKING FIX ADJUSTMENT (FOR AU-63 NTSC & PAL)

(W5 SERVO)

TEST POINT	MODE	TAPE USED	M.EQ.	INPUT SIGNAL	ADJUSTMENT
TP3 TP110	PLAY	ALIGNMENT TAPE (COLOR BAR)	OSCILLOSCOPE	----------	VR3 (R/P TRACK) R/P TRACK is VR's name This is used for AT

Step 1. MACHINE CONDITION	Refer to Set Up Conditions at 4-14 Machine Condition Setting (2).
Step 2. SCOPE CH1 : TP3 (Trigger) CH2 : TP110 1. Set the sweep range of scope so that the "A" width measure across 9 Lines on the oscilloscope face.	⊘ VR3 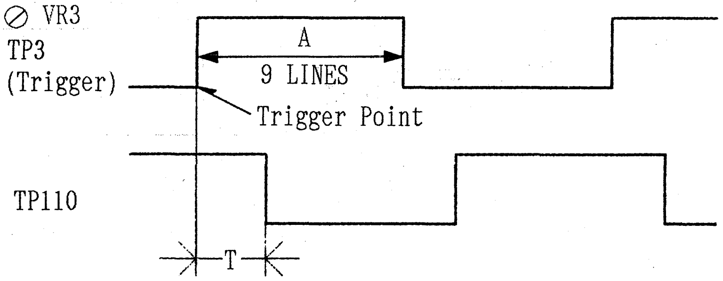 TP3 (Trigger) A 9 LINES Trigger Point TP110 T T = 3 ± 0.1 LINES (A : T = 9 : 3)

4-21. TRACKING FIX ADJUSTMENT (FOR AU-62 NTSC & PAL)

(W5 SERVO)

TEST POINT	MODE	TAPE USED	M.EQ.	INPUT SIGNAL	ADJUSTMENT
TP3 TP110	PLAY	ALIGNMENT TAPE	OSCILLOSCOPE	----------	VR3 (R/P TRACK)
Step 1. MACHINE CONDITION			FRONT PANEL TRACKING VR : DETENT POSITION		
Step 2. SCOPE CH1 : TP3 (Trigger) CH2 : TP110			⊘ VR3 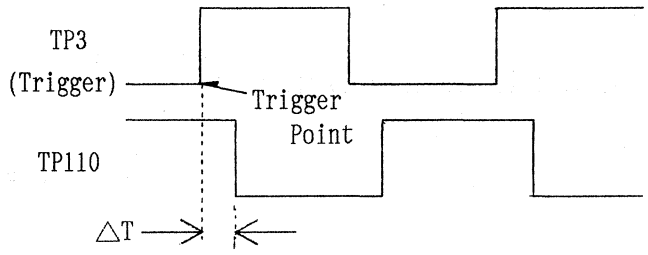 △T = 0 ± 100 [μsec]		

4-22. ×1/32 SPEED ADJUSTMENT (1)
(FOR AU-65/63/62 NTSC & PAL)

(W5 SERVO)

TEST POINT	MODE	TAPE USED	M.EQ.	INPUT SIGNAL	ADJUSTMENT
TP115	SHTL ×1/32	PRE-RECORDED 90 min. TAPE (MIDDLE PORTION)	FREQUENCY COUNTER	----------	VR101 (1/32 C)
Step 1. FREQUENCY COUNTER CONDITION			SW : LOW and L. P. F.		
Step 2. SPECIFICATION			⊘ VR101 NTSC 67.5 ± 5 [Hz] PAL 56.25 ± 5 [Hz]		

4-23. ×1/32 SPEED ADJUSTMENT (2)
(FOR AU-65/63/62 NTSC & PAL)

(W5 SERVO)

TEST POINT	MODE	TAPE USED	M.EQ.	INPUT SIGNAL	ADJUSTMENT
TP113 TP115	SHTL ×1/32	PRE-RECORDED 90 min. TAPE (MIDDLE PORTION)	OSCILLOSCOPE	----------	VR102 (1/32 A) VR101 (1/32 C)

Step 1. MACHINE CONDITION	Refer to Set Up Conditions at 4-14 Machine Condition Setting (2).
Step 2. 1. SCOPE : TP113 2. Confirm that the waveform is duty 50%.	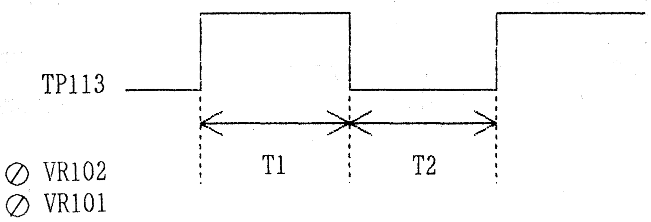 T1 : T2 = 4 : 6 ~ 6 : 4
Step 3. 1. If it is not within specification, adjust VR102 so that T1 : T2 = 5 : 5 2. After that adjust VR101 (Section 4-22 ×1/32 SPEED ADJ.(1)). 3. Reconfirm the Step 2.	

4-24. PG SHIFTER ADJUSTMENT
(FOR AU-65/62 NTSC & PAL)

(W5 SERVO)

TEST POINT	MODE	TAPE USED	M.EQ.	INPUT SIGNAL	ADJUSTMENT
TP13 TP7	PLAY	ALIGNMENT COLOR BAR	OSCILLOSCOPE	----------	SW 1 (FINE) SW 2 (COARSE)

Step 1.

Note:
Confirm that the Y RF envelope is maximized at TP301 on W3 Board.
(The mechanical interchangeability should be completed.)

1. Adjust SW1 and SW2 so that the T = 2.75 ± 0.1 [H] as shown in figure.

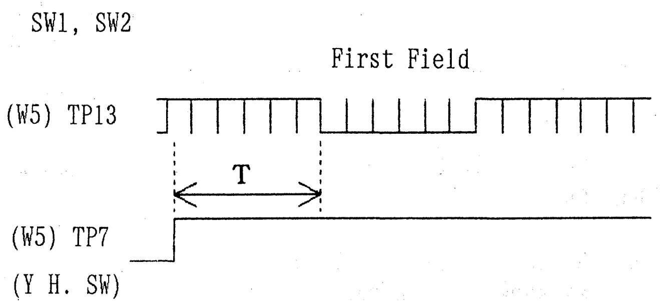

T = 2.75 ± 0.1 [H]

4-25. PG SHIFTER ADJUSTMENT
(FOR AU-63 NTSC & PAL)

(W5 SERVO)

TEST POINT	MODE	TAPE USED	M.EQ.	INPUT SIGNAL	ADJUSTMENT
TP13 TP702	PLAY	ALIGNMENT COLOR BAR	OSCILLOSCOPE	----------	SW 1 (FINE) SW 2 (COARSE)

Step 1.
MACHINE CONDITION

Refer to Set Up Conditions at 4-14 Machine Condition Setting (2).

Step 2.

Note:
Confirm that the Y RF envelope is maximized at TP301 on W3 Board.
(The mechanical interchangeability should be completed.)

1. Adjust SW1 and SW2 so that the T = 2.75 ± 0.1 [H] as shown in figure.

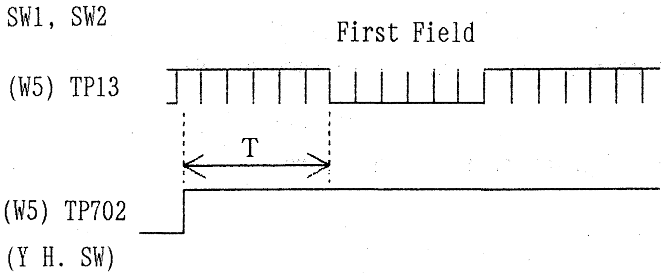

T = 2.75 ± 0.1 [H]

4-26. REC SHIFTER ADJUSTMENT (FOR AU-65 NTSC & PAL)

(W5 SERVO)

TEST POINT	MODE	TAPE USED	M.EQ.	INPUT SIGNAL	ADJUSTMENT
TP13 TP7	REC	BLANK TAPE	OSCILLOSCOPE	COMPONENT COLOR BAR	VR1 (REC SHIFT)

Step 1. MACHINE CONDITION	1. Refer to Set Up Conditions at 4-14 Machine Condition Setting (2). 2. INPUT SELECT : COMPONENT (Pull Out Drawer & Front Sub Panel)
Step 2. SCOPE CH1 : TP13 SCOPE CH2 : TP7 1. Adjust VR1 so that the T = 2.75 ± 0.1 [H] as shown in figure.	⊘ VR1 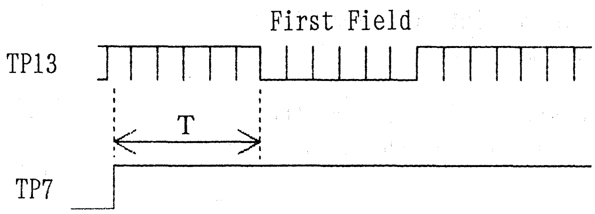 T = 2.75 ± 0.1 [H]

4-27. DRUM PHASE FLUCTUATION CONFIRMATION (FOR AU-65 NTSC & PAL)

(W5 SERVO)

TEST POINT	MODE	TAPE USED	M.EQ.	INPUT SIGNAL	ADJUSTMENT
TP3 TP7	REC	BLANK TAPE	OSCILLOSCOPE	COMPONENT COLOR BAR	------------

Step 1. MACHINE CONDITION	Refer to Set up Conditions at 4-14 Machine Condition Setting (2).
Step 2. SCOPE CH1 : TP3 (Trigger) SCOPE CH2 : TP7 1. Trigger the scope at rising edge of TP3. 2. Confirm that the T fluctuation is less than 6 μsec as shown in figure.	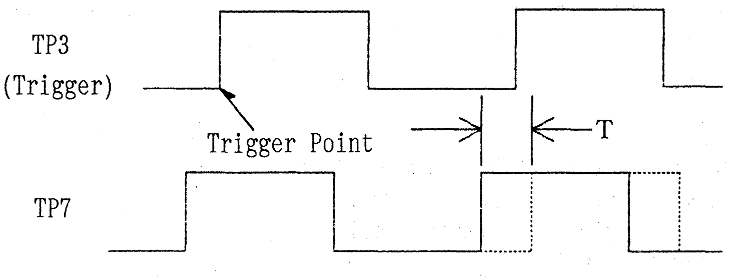 T = less than 6 μsec.
Step 3. 1. If it is not with in specification, readjust from beginning of this section (4-2 ~).	

4-28. DRUM PHASE FLUCTUATION CONFIRMATION (FOR AU-62/63 NTSC & PAL)

(W5 SERVO)

TEST POINT	MODE	TAPE USED	M.EQ.	INPUT SIGNAL	ADJUSTMENT
TP3 TP7	PLAY	PRE-RECORDED TAPE 90 min. MIDDLE PORTION	OSCILLOSCOPE	---------	------------

Step 1. MACHINE CONDITION	Refer to Set Up Conditions at 4-14 Machine Condition Setting (2).
Step 2. SCOPE CH1 : TP3 (Trigger) SCOPE CH2 : TP7 1. Trigger the scope at rising edge of TP3. 2. Confirm that the T fluctuation is less than 6 μsec as shown in figure.	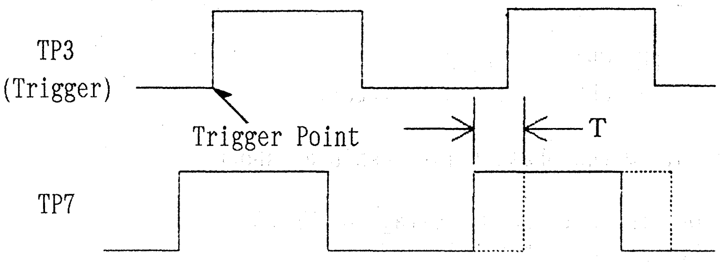 T = less than 6 μsec.
Step 3. 1. If it is not with in specification, readjust from beginning of this section (4-2 ~).	

4-29. CTL AMP CONFIRMATION (FOR AU-65 NTSC & PAL)

(W5 SERVO)

TEST POINT	MODE	TAPE USED	M.EQ.	INPUT SIGNAL	ADJUSTMENT
TP109 TP110	Time Code Insert Recording	BLANK TAPE	OSCILLOSCOPE	COMPONENT COLOR BAR	------------

Step 1. SCOPE CH1 : TP109 SCOPE CH2 : TP110 (Trigger) 1. Confirm that the V1 (Noise level) is less than 400mVp-p. 2. Confirm the phase relationship as shown. 3. Confirm that the DC voltage of TP109 (V2) is less than 2.5V (DC).	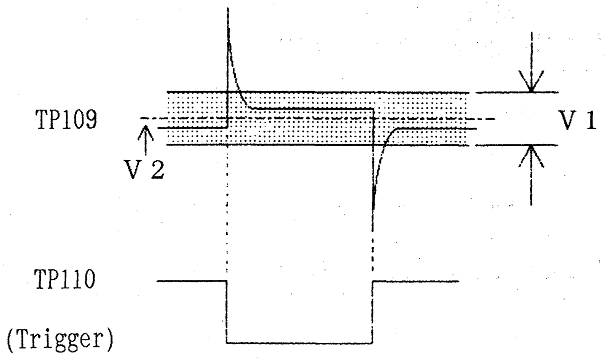

4-30. CTL AMP CONFIRMATION
(FOR AU-62/63 NTSC & PAL)

(W5 SERVO)

TEST POINT	MODE	TAPE USED	M.EQ.	INPUT SIGNAL	ADJUSTMENT
TP109 TP110	PLAY	ALIGNMENT TAPE (COLOR BAR)	OSCILLOSCOPE	COMPONENT COLOR BAR	------------

Step 1.
MACHINE CONDITION

Refer to Set Up Conditions at 4-14 Machine Condition Setting (2).

Step 2.

SCOPE CH1 : TP109
SCOPE CH2 : TP110 (Trigger)

1. Confirm the phase relationship as shown.
2. Confirm that the DC voltage of TP109 (V2) is less than 2.5V (DC).

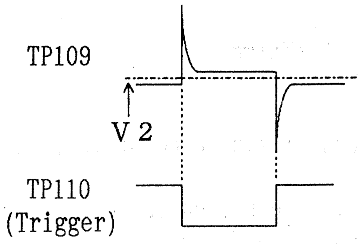

4-31. CTL-RECOVER CIRCUIT OPERATING CONFIRMATION
(FOR AU-65/63/62 NTSC & PAL)

(W5 SERVO)

TEST POINT	MODE	TAPE USED	M.EQ.	INPUT SIGNAL	ADJUSTMENT
TP110 W5 Terminal R18B	SHTL ×1/2 -×1/2	ALIGNMENT TAPE	OSCILLOSCOPE	----------	------------

Step 1.
MACHINE CONDITION

Refer to Set Up Conditions at 4-14 Machine Condition Setting (2).

Step 2.

SCOPE CH1 : TP110
SCOPE CH2 : Terminal R18B
(on W5 Board)

1. MODE : SHTL × 1/2
2. Confirm the phase relationship as shown.

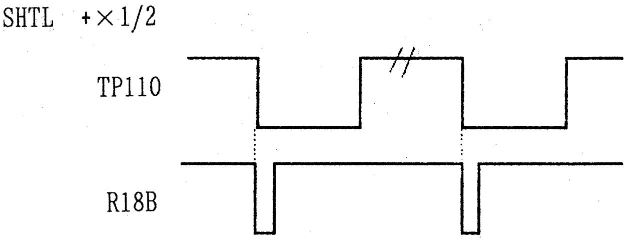

Step 3.

1. MODE : SHTL −× 1/2
2. Confirm the phase relationship as shown.

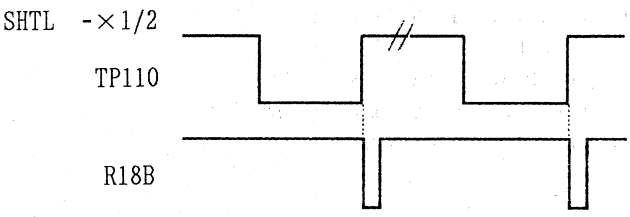

4-32-N. 50 PIN PARALLEL REMOTE CAPSTAN OVERRIDE SYNCRONIZATION ADJUSTMENT (NTSC)

(W5 SERVO)

TEST POINT	MODE	TAPE USED	M.EQ.	INPUT SIGNAL	ADJUSTMENT
TP115	PLAY	PRE-RECORDED TAPE	FREQUENCY COUNTER	----------	VR104 (CAP OVER) VR105

Note:
This adjustment is needed when AU-MK25 is installed with AU-65/63/62 NTSC model.

Step 1.

1. Connect a DC voltage to pin 46 of 50 Pin Remote Connector.
2. Set the DC voltage to 5.2V (DC).
3. FREQUENCY COUNTER : TP115
4. Adjust VR104 so that the frequency becomes 2158 ± 50Hz.
5. Set the DC voltage to 8.2V (DC).
6. Frequency Counter : TP115
7. Adjust VR105 so that the frequency becomes 2590 ± 100Hz.
8. Set the DC voltage to 2.2V (DC).
9. Frequency Counter : TP115
10. Confirm that the frequency becomes 1840 ± 100Hz.
11. If it is not, repeat from item 2 to item 10.

46 Pin (on 50 Pin)	TP115 (Frequency)	VR No.
2.2V (DC)	1840 ± 100Hz	CONFIRMATION
5.2V (DC)	2158 ± 50Hz	VR104
8.2V (DC)	2590 ± 100Hz	VR105

4-32-P. 50 PIN PARALLEL REMOTE CAPSTAN OVERRIDE SYNCRONIZATION ADJUSTMENT (PAL)

(W5 SERVO)

TEST POINT	MODE	TAPE USED	M.EQ.	INPUT SIGNAL	ADJUSTMENT
TP115	PLAY	PRE-RECORDED TAPE	FREQUENCY COUNTER	----------	VR104 (CAP OVER) VR105

Note:
This adjustment is needed when AU-MK25 is installed with AU-65/63/62 PAL model.

Step 1.

1. Connect a DC voltage to pin 46 of 50 Pin Remote Connector.
2. Set the DC voltage to 5.2V (DC).
3. FREQUENCY COUNTER : TP115
4. Adjust VR104 so that the frequency becomes 1800 ± 50Hz.
5. Set the DC voltage to 8.2V (DC).
6. Frequency Counter : TP115
7. Adjust VR105 so that the frequency becomes 2160 ± 100Hz.
8. Set the DC voltage to 2.2V (DC).
9. Frequency Counter : TP115
10. Confirm that the frequency becomes 1535 ± 100Hz.
11. If it is not, repeat from item 2 to item 10.

46 Pin (on 50 Pin)	TP115 (Frequency)	VR No.
2.2V (DC)	1535 ± 100Hz	CONFIRMATION
5.2V (DC)	1800 ± 50Hz	VR104
8.2V (DC)	2160 ± 100Hz	VR105

4-33. SWITCHING POWER SOURCE ADJUSTMENT (FOR AU-63 NTSC & PAL)

(AT POWER)

TEST POINT	MODE	TAPE USED	M.EQ.	INPUT SIGNAL	ADJUSTMENT
TP 5 TP 6	PLAY	BLANK TAPE	VOLTMETER	----------	VR 1

Note: This adjustment is AU-63 only.

SPEC :

TP 5 = +400V ± 10V ⊘ VR1

TP 6 = -400V ± 10V (CONFIRMATION)

4-34. OFFSET ADJUSTMENT (1) (FOR AU-63 NTSC & PAL)

(AT POWER)

TEST POINT	MODE	TAPE USED	M.EQ.	INPUT SIGNAL	ADJUSTMENT
TP 1	PLAY	-------	VOLTMETER	----------	VR 2

Note: This adjustment is AU-63 only.

1. Connect a jumper wire between TPG1 and TP9.
2. Adjust VR2 so that the voltage at TP1 is 0 ± 0.3V.
3. Disconnect the connected jumper wire.

TP1 = 0 ± 0.3V
(When TP9 and TPG1 are shorted.)

4-35. OFFSET ADJUSTMENT (2) (FOR AU-63 NTSC & PAL)

(AT POWER)

TEST POINT	MODE	TAPE USED	M.EQ.	INPUT SIGNAL	ADJUSTMENT
TP 2	PLAY	-------	VOLTMETER	----------	VR 3

Note: This adjustment is AU-63 only.

1. Connect a jumper wire between TPG1 and TP10.
2. Adjust VR3 so that the voltage at TP2 is 0 ± 0.3V.
3. Disconnect the connected jumper wire.

TP2 = 0 ± 0.3V
(When TP10 and TPG1 are shorted.)

4-36. MACHINE CONDITION SETTING (3) (FOR AU-63 AUTO TRACKING)

(W5 AT)

1. This adjustment procedure is required for machines equipped with Auto Tracking Function.

2. Confirm that the connector (P10) is connected to AT Power Board to supply the Auto Tracking voltage.

3. Before this AUTO TRACKING ADJ., the AT POWER BOARD should be adjusted (Refer to Section 4-33 ~ 4-35).

4. Before this AUTO TRACKING ADJ., the following adjustment should be completed.

   (1) Y Playback FM Carrier Level Adjustment (7-1)
   (2) Y Playback RF Level Adjustment (12-18)
   (3) C Playback FM Carrier Level Adjustment (7-2)
   (4) C Playback RF Level Adjustment (12-19)

4-37. CAPSTAN FG ADJUSTMENT (FOR AU-63 NTSC & PAL)

(W5 AT)

TEST POINT	MODE	TAPE USED	M.EQ.	INPUT SIGNAL	ADJUSTMENT
TP713 TP714	PLAY	ALIGNMENT TAPE (COLOR BAR)	OSCILLOSCOPE	----------	VR708 (CAP FG1 OFFSET) VR709 (CAP FG2 OFFSET)

Note: This adjustment is AU-63 only.

Step 1.

SCOPE CH1 : TP713
SCOPE CH2 : TP714

1. Confirm that the "A" level is more than 0.8Vp-p.

2. Adjust VR708 (for TP713) and VR709 (for TP714) so that the DC level "(B)" is 2.5 ± 0.2V (DC).

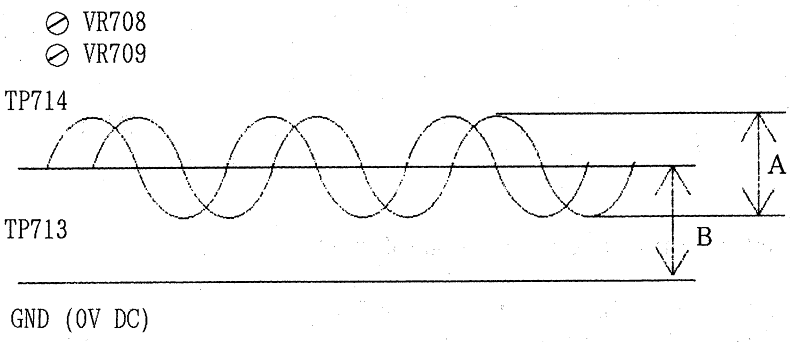

A = More than 0.8Vp-p
B = 2.5V ± 0.2V (DC)

4-38. CTL PHASE SHIFTER ADJUSTMENT (FOR AU-63 NTSC & PAL)

(W5 AT)

TEST POINT	MODE	TAPE USED	M.EQ.	INPUT SIGNAL	ADJUSTMENT
TP705 TP707	PLAY	ALIGNMENT TAPE (COLOR BAR)	OSCILLOSCOPE	----------	VR701 (MR SHIFTER)

Note: This adjustment is AU-63 only. Step 1. MACHINE CONDITION	Refer to Set Up Conditions at the beginning of this SECTION (AT - W5) SW700 (AT TRACKING SW) : PRESET Side
Step 2. SCOPE CH1 : TP705 SCOPE CH2 : TP707 1. Adjust VR701 so that the both waveforms are flat 0 ± 0.2V (DC). 2. After that confirm that the FRM LED (on W5 Board) is "OFF". 3. If it is not, readjust VR701 until the each condition is reached.	⊘ VR701 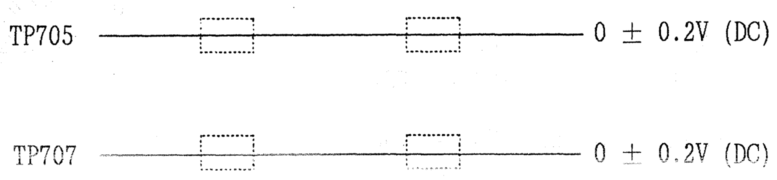

4-39. X-VALUE ADJUSTMENT (FOR AU-63 NTSC & PAL)

(W5 AT)

TEST POINT	MODE	TAPE USED	M.EQ.	INPUT SIGNAL	ADJUSTMENT
TP700 TP702	PLAY	ALIGNMENT TAPE (COLOR BAR)	OSCILLOSCOPE	----------	VR702 (AX) VR703 (BX)

Note: This adjustment is AU-63 only. Step 1. MACHINE CONDITION	Refer to Set Up Conditions at the beginning of this SECTION (AT - W5). SW700 (AT TRACKING SW) : PRESET Side
Step 2. SCOPE CH1 : TP700 SCOPE CH2 : TP702 (Trigger) 1. Turn VR702 and VR703 fully counterclockwise. 2. Adjust VR702 and then VR703 until they reach the 1st maximum position. *Note: Adjust to max. point, even if both channels are unequal.	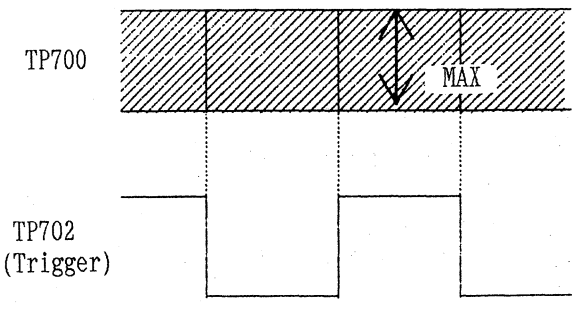 ⊘ VR702 ⊘ VR703

4-40. AT GAIN ADJUSTMENT (1) (FOR AU-63 NTSC & PAL)

(W5 AT)

TEST POINT	MODE	TAPE USED	M.EQ.	INPUT SIGNAL	ADJUSTMENT
TP700 TP702	VAR × 30/32	ALIGNMENT TAPE (COLOR BAR)	OSCILLOSCOPE	----------	VR705 (A COMP) VR707 (B COMP) VR704 (A GAIN) VR706 (B GAIN)

Note: This adjustment is AU-63 only.

Step 1.

MACHINE CONDITION

Refer to Set Up Conditionsat the beginning of this SECTION (AT - W5).

VR705 : Fully Counterclockwise
VR707 : Fully Counterclockwise
SW700 (AT TRACKING SW) : PRESET Side

Step 2.

SCOPE CH1 : TP700
SCOPE CH2 : TP702 (Trigger)

1. Adjust VR704 and VR706 so that the fluctuation of each channel is minimized as shown.

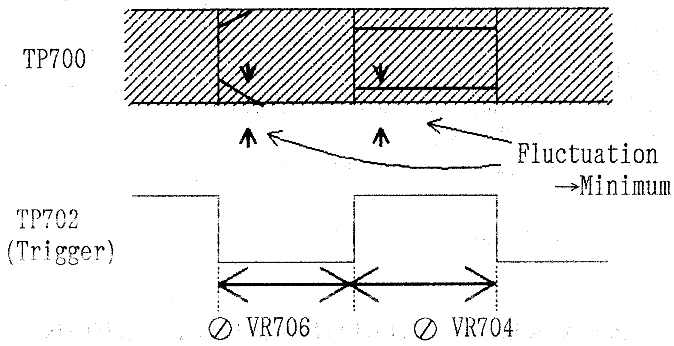

4-41. AT GAIN ADJUSTMENT (2) (FOR AU-63 NTSC & PAL)

(W5 AT)

TEST POINT	MODE	TAPE USED	M.EQ.	INPUT SIGNAL	ADJUSTMENT
TP700 TP702	VAR -×1	ALIGNMENT TAPE (COLOR BAR)	OSCILLOSCOPE	----------	VR705 (A COMP) VR707 (B COMP)

Note: This adjustment is AU-63 only.

Step 1.

MACHINE CONDITION

Refer to Set Up Conditons at the beginning of this SECTION (AT - W5).

SW700 (AT TRACKING SW) : PRESET Side

Step 2.

SCOPE CH1 : TP700
SCOPE CH2 : TP702 (Trigger)

1. Adjust VR705 and VR707 so that the fluctuation of each channel is minimized as shown.

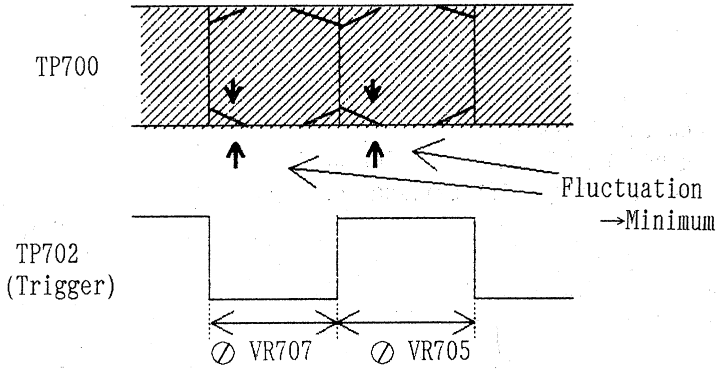

4-42. ENVELOPE INPUT LEVEL ADJUSTMENT (FOR AU-63 NTSC & PAL)

(W5 AT)

TEST POINT	MODE	TAPE USED	M.EQ.	INPUT SIGNAL	ADJUSTMENT
TP701	PLAY	ALIGNMENT TAPE (COLOR BAR)	OSCILLOSCOPE	----------	VR700 (RF LEVEL)

Note: This adjustment is AU-63 only.

Step 1.
MACHINE CONDITION

Refer to Set Up Conditions at the beginning of this SECTION (AT - W5).
SW700 (AT TRACKING SW) : PRESET Side

Step 2.

SCOPE CH1 : TP701

1. Adjust VR700 so that the DC voltage is 3.4 + 0/-0.2V (DC) as shown.

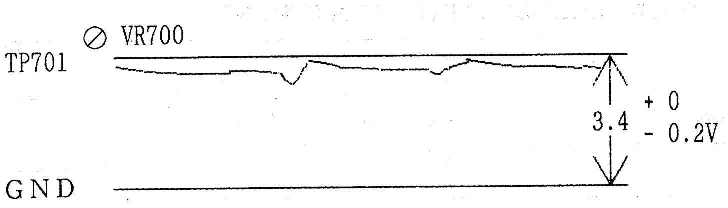

4-43. AUTO TRACKING CONFIRMATION (FOR AU-63 NTSC & PAL)

(W5 AT)

TEST POINT	MODE	TAPE USED	M.EQ.	INPUT SIGNAL	ADJUSTMENT
TP700 TP702	PLAY	ALIGNMENT TAPE	OSCILLOSCOPE	----------	VR702 (AX) VR703 (BX)

Note: This adjustment is AU-63 only.

Step 1.
MACHINE CONDITION

Refer to Set Up Conditions at the beginning of this SECTION (AT - W5).
SW700 (AT TRACKING SW) : PRESET Side

Step 2.

1. SCOPE CH1 : TP700
   SCOPE CH2 : TP702 (Trigger)
2. Adjust VR702 and VR703 so that the RF Level becomes 50% at TP700.
3. Set the SW700 (AT TRACKING SW) to "AUTO" side.
4. Confirm that the RF Level bevomes maximum automatically.
5. Set the SW700 to "PRESET" side again.
6. Readjust VR702 and VR703 so that the RF Level is maximized.
7. Finally, set the SW700 to "AUTO" side.

TP700

"PRESET" — VR702, VR703
↓
"AUTO" — RF LEVEL 100% Automatically
↓
"PRESET" — Readjust VR702 and VR703 so that the RF level is maximized.
↓
"AUTO"

5. AUDIO (W6) BOARD (1/2) — LINEAR AUDIO SECTION —

LINEAR AUDIO SECTION (W6) FLOWCHART FOR AU-65

∗BEFORE ADJUSTMENT
The adjustment with this comment is necessary to adjust after the following adjustments are completed.

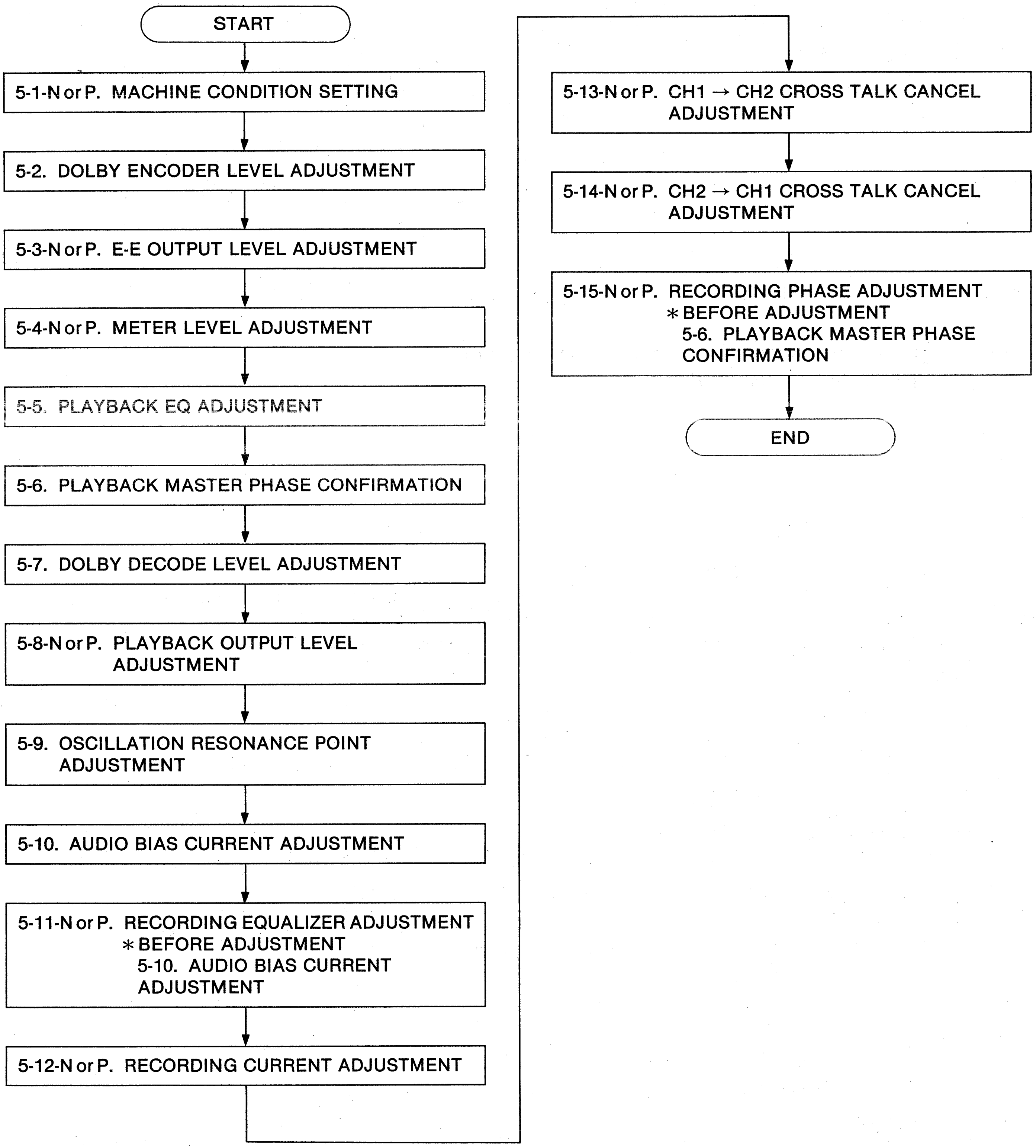
START
5-1-N or P. MACHINE CONDITION SETTING
5-2. DOLBY ENCODER LEVEL ADJUSTMENT
5-3-N or P. E-E OUTPUT LEVEL ADJUSTMENT
5-4-N or P. METER LEVEL ADJUSTMENT
5-5. PLAYBACK EQ ADJUSTMENT
5-6. PLAYBACK MASTER PHASE CONFIRMATION
5-7. DOLBY DECODE LEVEL ADJUSTMENT
5-8-N or P. PLAYBACK OUTPUT LEVEL ADJUSTMENT
5-9. OSCILLATION RESONANCE POINT ADJUSTMENT
5-10. AUDIO BIAS CURRENT ADJUSTMENT
5-11-N or P. RECORDING EQUALIZER ADJUSTMENT ∗BEFORE ADJUSTMENT 5-10. AUDIO BIAS CURRENT ADJUSTMENT
5-12-N or P. RECORDING CURRENT ADJUSTMENT
5-13-N or P. CH1 → CH2 CROSS TALK CANCEL ADJUSTMENT
5-14-N or P. CH2 → CH1 CROSS TALK CANCEL ADJUSTMENT
5-15-N or P. RECORDING PHASE ADJUSTMENT ∗BEFORE ADJUSTMENT 5-6. PLAYBACK MASTER PHASE CONFIRMATION
END

LINEAR AUDIO SECTION (W6) FLOWCHART FOR AU-63 AND AU-62

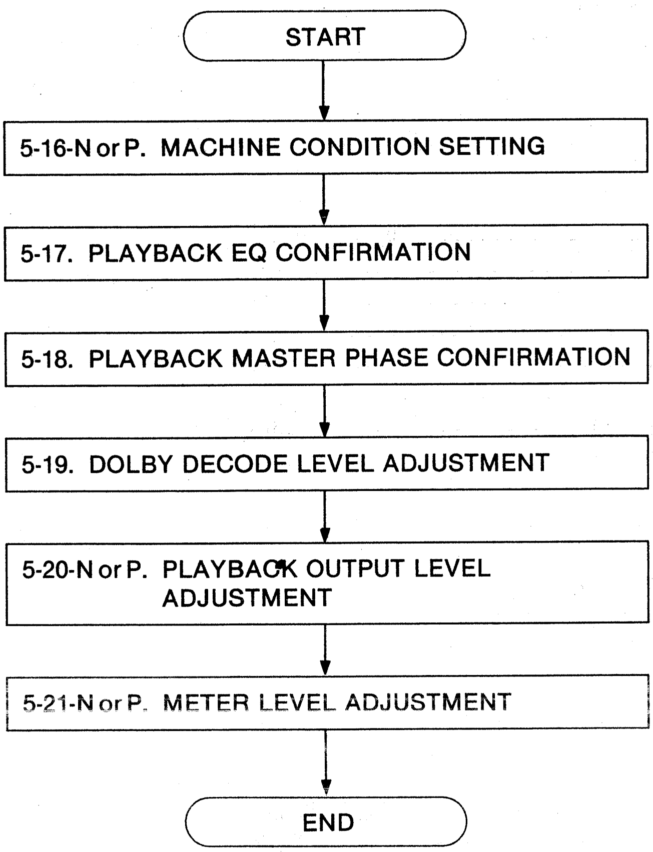
START
5-16-N or P. MACHINE CONDITION SETTING
5-17. PLAYBACK EQ CONFIRMATION
5-18. PLAYBACK MASTER PHASE CONFIRMATION
5-19. DOLBY DECODE LEVEL ADJUSTMENT
5-20-N or P. PLAYBACK OUTPUT LEVEL ADJUSTMENT
5-21-N or P. METER LEVEL ADJUSTMENT
END

5. AUDIO (W6) BOARD (1/2)
— LINEAR AUDIO SECTION —

5-1-N. MACHINE CONDITION SETTING (FOR AU-65 NTSC LINEAR AUDIO)

Set the switches on the Front Panel as follows except special condition for NTSC VTR.

REC & PB VR -- PRESET (PUSH)
METER SELECT --- LINEAR
MODE --- EE
HEAD SELECT --- R/P
DOLBY --- OFF
LIMITER --- OFF
INPUT LEVEL SELECT (on the Audio I/O Board) --------------- +4dBm
OUTPUT LEVEL SELECT (on the Audio I/O Board) --------------- +4dBm

5-1-P. MACHINE CONDITION SETTING (FOR AU-65 PAL LINEAR AUDIO)

Set the switches on the Front Panel as follows except special condition for PAL VTR.

REC & PB VR -- PRESET (PUSH)
METER SELECT --- LINEAR
MODE --- EE
HEAD SELECT --- R/P
DOLBY --- OFF
LIMITER --- OFF
INPUT LEVEL SELECT (on the Audio I/O Board) --------------- +0dBu
OUTPUT LEVEL SELECT (on the Audio I/O Board) --------------- +0dBu

5-2. DOLBY ENCODER LEVEL ADJUSTMENT (FOR AU-65 NTSC & PAL)

(AUDIO VR BOARD)

TEST POINT	MODE	TAPE USED	M.EQ.	INPUT SIGNAL	ADJUSTMENT
TP101 (CH1) on W6 TP301 (CH2) on W6	EJECT	-------	VTVM	1KHz Sinewave Signal NTSC : +4dBm PAL : +0dBu	VR1 (CH1 DOLBY ENC) on AUDIO VR VR5 (CH2 DOLBY ENC) on AUDIO VR
Step 1. MACHINE CONDITION			Refer to Set Up Conditions at the beginning of this SECTION (AUDIO - W6 Machine Condition 5-1-N or 5-1-P).		
Step 2. VTVM : TP101 (CH1) TP301 (CH2)			⊘ VR1, 5 (on AUDIO VR P.C.Board) SPECIFICATION : -6dBm ± 0.2dB (387.5mVrms)		

5-3-N. E-E OUTPUT LEVEL ADJUSTMENT (FOR AU-65 NTSC)

(W6 AUDIO)

TEST POINT	MODE	TAPE USED	M.EQ.	INPUT SIGNAL	ADJUSTMENT
CH1 LINE OUT CH2 LINE OUT	EJECT	-------	VTVM	1KHz Sinewave Signal +4dBm.	VR101 (CH1 E-E OUT) VR301 (CH2 E-E OUT)

Step 1. MACHINE CONDITION	Refer to Set Up Conditions at the beginning of this SECTION (AUDIO - W6 Machine Condition 5-1-N).
Step 2. VTVM : CH1 LINE OUT CH2 LINE OUT	⊘ VR101, 301 SPECIFICATION : +4dBm ± 0.2dB

5-3-P. E-E OUTPUT LEVEL ADJUSTMENT (FOR AU-65 PAL)

(W6 AUDIO)

TEST POINT	MODE	TAPE USED	M.EQ.	INPUT SIGNAL	ADJUSTMENT
CH1 LINE OUT CH2 LINE OUT	EJECT	-------	VTVM	1KHz Sinewave Signal 0dBu.	VR101 (CH1 E-E OUT) VR301 (CH2 E-E OUT)

Step 1. MACHINE CONDITION	Refer to Set Up Conditions at the beginning of this SECTION (AUDIO - W6 Machine Condition 5-1-P).
Step 2. VTVM : CH1 LINE OUT CH2 LINE OUT	⊘ VR101, 301 SPECIFICATION : 0dBu ± 0.2dB

5-4-N. METER LEVEL ADJUSTMENT (FOR AU-65 NTSC)

(FRONT I/F BOARD)

TEST POINT	MODE	TAPE USED	M.EQ.	INPUT SIGNAL	ADJUSTMENT
CH1 METER CH2 METER	EJECT	-------	-------	1KHz Sinewave Signal +4dBm.	VR101 (CH1 METER) on Front Interface VR102 (CH2 METER) on Front Interface
Step 1. MACHINE CONDITION			Refer to Set Up Conditions at the beginning of this SECTION (AUDIO - W6 Machine Condition 5-1-N).		
Step 2. 1.. Adjust VR101 (CH1) and VR102 (CH2) on the Front Interface Board so that the meter indicates "0" VU as shown.			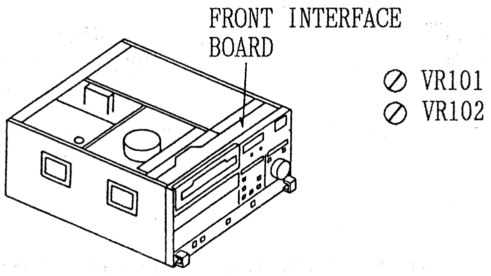 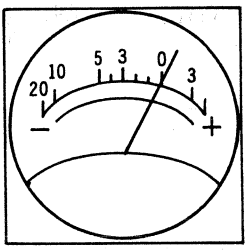		

5-4-P. METER LEVEL ADJUSTMENT (FOR AU-65 PAL)

(FRONT I/F BOARD)

TEST POINT	MODE	TAPE USED	M.EQ.	INPUT SIGNAL	ADJUSTMENT
CH1 METER CH2 METER	EJECT	-------	-------	1KHz Sinewave Signal OdBu.	VR101 (CH1 METER) on Front Interface VR102 (CH2 METER) on Front Interface
Step 1. MACHINE CONDITION			Refer to Set Up Conditions at the beginning of this SECTION (AUDIO - W6 Machine Condition 5-1-P).		
Step 2. 1. Adjust VR101 (CH1) and VR102 (CH2) on the Front Interface Board so that the meter indicates "-4" VU as shown.			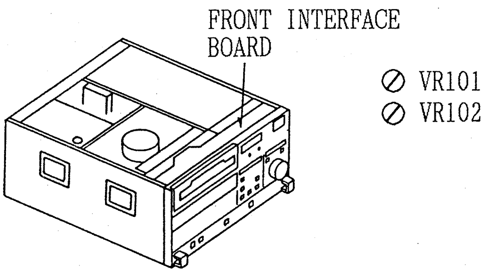 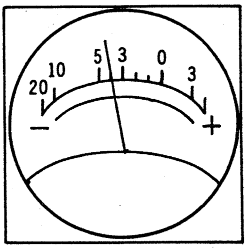		

5-5. PLAYBACK EQ ADJUSTMENT (FOR AU-65 NTSC & PAL)

(W6 AUDIO)

TEST POINT	MODE	TAPE USED	M.EQ.	INPUT SIGNAL	ADJUSTMENT
CH1 LINE OUT CH2 LINE OUT	PLAY	ALIGNMENT TAPE F. RESPONSE ADJ. PORTION	VTVM	----------	SW101 (CH1 PB EQ) SW301 (CH2 PB EQ)

Step 1. MACHINE CONDITION	Refer to Set Up Conditions at the beginning of this SECTION (AUDIO - W6 Machine Condition 5-1-N or 5-1-P).
Step 2. 1. Play back the Frequency Response portion of the Alignment Tape. 2. Confirm that the specification as shown. 3. If it is not within specification, adjust SW101 (CH1) and SW301 (CH2). 4. Repeat Item 1, 2, 3 until the specification is met.	⊘ SW101, 301 SPECIFICATION : 1KHz ~ 7.5KHz = ± 1dB 7.5KHz ~ 15KHz = +1.5dB −2.5dB (1KHz Reference)

5-6. PLAYBACK MASTER PHASE CONFIRMATION (FOR AU-65 NTSC & PAL)

(W6 AUDIO)

TEST POINT	MODE	TAPE USED	M.EQ.	INPUT SIGNAL	ADJUSTMENT
CH1 LINE OUT CH2 LINE OUT	PLAY	ALIGNMENT TAPE 15KHz PORTION	OSCILLOSCOPE	----------	A/C HEAD AZIMUTH ADJUSTMENT (MECHANICAL)

Step 1. MACHINE CONDITION	1. Refer to Set Up Conditions at the beginning of this SECTION (AUDIO - W6 Machine Condition 5-1-N or 5-4-P). 2. The PLAYBACK EQ ADJ. (5-5) should be completed.
Step 2. SCOPE CH1 : CH1 LINE OUT SCOPE CH2 : CH2 LINE OUT 1. Play back the 15KHz portion of the Alignment Tape. 2. Confirm that the phase difference is 0 ± 2.8μsec (±15°). 3. If it is not, readjust the A/C Head Azimuth Mechanically (See Mech. Adj. Section). 4. After this adjustment is finished, readjust the PB EQ ADJ. (5-5).	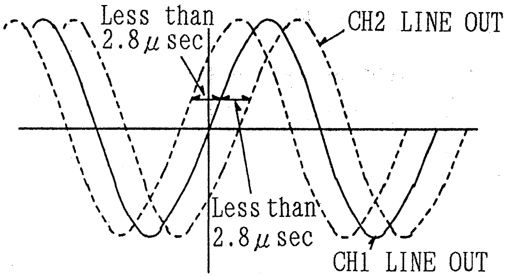 Less than 2.8μsec CH2 LINE OUT Less than 2.8μsec CH1 LINE OUT or Place scope in X-Y mode and observe the pattern. Confirm both circles are in phase. 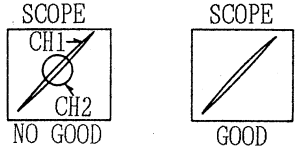

5-7. DOLBY DECODE LEVEL ADJUSTMENT (FOR AU-65 NTSC & PAL)

(W6 AUDIO)

TEST POINT	MODE	TAPE USED	M.EQ.	INPUT SIGNAL	ADJUSTMENT
TP101 (CH1) TP301 (CH2)	PLAY	ALIGNMENT TAPE 1KHz OVU PORTION	VTVM	----------	VR103 (CH1 PB GAIN) VR303 (CH2 PB GAIN)
Step 1. MACHINE CONDITION			Refer to Set Up Conditions at the beginning of this SECTION (AUDIO - W6 Machine Condition 5-1-N or 5-1-P).		
Step 2. VTVM : TP101 (CH1) TP301 (CH2)			⊘ VR103, VR303 SPECIFICATION : -6dBm ± 0.2dB (387.5mVrms)		

5-8-N. PLAYBACK OUTPUT LEVEL ADJUSTMENT (FOR AU-65 NTSC)

(AUDIO VR BOARD)

TEST POINT	MODE	TAPE USED	M.EQ.	INPUT SIGNAL	ADJUSTMENT
CH1 LINE OUT CH2 LINE OUT	PLAY	ALIGNMENT TAPE 1KHz OVU PORTION	VTVM	----------	VR3 (CH1 PB OUT) on Audio VR VR7 (CH2 PB OUT) on Audio VR
Step 1. MACHINE CONDITION			Refer to Set Up Conditions at the beginning of this SECTION (AUDIO - W6 Machine Condition 5-1-N).		
Step 2. VTVM : CH1 LINE OUT CH2 LINE OUT 1. Adjust VR3 and VR7 on the Audio VR Board so that the output level is +4dBm ± 0.2dBm.			⊘ VR3, 7 SPECIFICATION : +4dBm ± 0.2dB.		

5-8-P. PLAYBACK OUTPUT LEVEL ADJUSTMENT (FOR AU-65 PAL)

(AUDIO VR BOARD)

TEST POINT	MODE	TAPE USED	M.EQ.	INPUT SIGNAL	ADJUSTMENT
CH1 LINE OUT CH2 LINE OUT	PLAY	ALIGNMENT TAPE 1KHz 0VU PORTION	VTVM	----------	VR3 (CH1 PB OUT) on Audio VR VR7 (CH2 PB OUT) on Audio VR

Step 1. MACHINE CONDITION	Refer to Set Up Conditions at the beginning of this SECTION (AUDIO - W6 Machine Condition 5-1-P).
Step 2. VTVM : CH1 LINE OUT CH2 LINE OUT 1. Adjust VR3 and VR7 on the Audio VR Board so that the output level is +0dBu ± 0.2dBu.	⊘ VR3, 7 SPECIFICATION : +0dBu ± 0.2dB.

5-9. OSCILLATION RESONANCE POINT ADJUSTMENT (FOR AU-65 NTSC & PAL)

(W6 AUDIO)

TEST POINT	MODE	TAPE USED	M.EQ.	INPUT SIGNAL	ADJUSTMENT
HOT : TP551 TP552 TP553 TP554 TP555 TP556 TP557 TP558 GND : TPG551	REC	BLANK TAPE	OSCILLOSCOPE	----------	T551 (CH1 BIAS) T552 (CH2 BIAS) T553 (CH1 ERASE) T554 (CH2 ERASE) T555 (TC BIAS) T556 (TC ERASE) T557 (CTL ERASE) T558 (FULL ERASE)

Step 1. MACHINE CONDITION	Refer to Set Up Conditions at the beginning of this SECTION (AUDIO - W6 Machine Condition 5-1-N or 5-1-P).
Step 2. SCOPE : The Connect & adjust for each Test Point. 1. Adjust the each coils so that the "A" point of the waveform is in the center between "B" and "C".	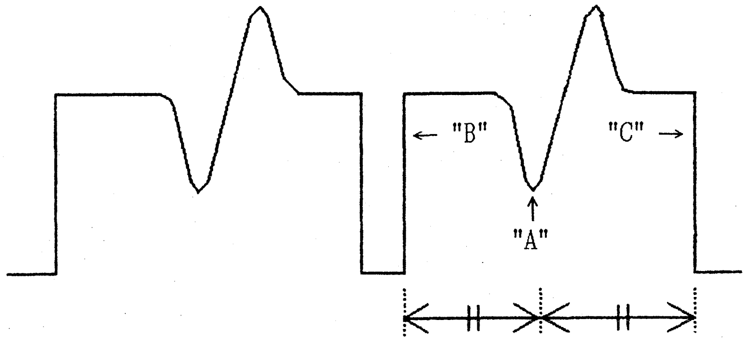

5-10. AUDIO BIAS CURRENT ADJUSTMENT (FOR AU-65 NTSC & PAL)

(W6 AUDIO)

TEST POINT	MODE	TAPE USED	M.EQ.	INPUT SIGNAL	ADJUSTMENT
CH1 LINE OUT CH2 LINE OUT	SELF REC/PB	BLANK TAPE	VTVM	10KHz Sinewave Signal NTSC : +4dBm PAL : +0dBu	VR551 (CH1 BIAS CURR.) VR552 (CH2 BIAS CURR.)

Step 1. MACHINE CONDITION	Refer to Set Up Conditions at the beginning of this SECTION (AUDIO - W6 Machine Condition 5-1-N or 5-1-P).

Step 2.

1. Place the unit in the recording mode.
2. Turn VR551 (CH1) from fully clockwise position to fully counterclockwise position slowly while in the recording.
3. VTVM : CH1 LINE OUT
4. Play back the just recorded portion.
5. Find the audio peak level and notate it.
6. Set VR551 around its center position.
7. Make a recording then, Playback that portion.
8. Confirm that the audio output level is -2.5dB ± 0.5dB (Bias Saturation point) from the Audio Peak Level.
9. If it is not, repeat from Item 6 to 8 until the Audio Bias is -2.5dB ± 0.5dB from the Audio Peak Level.

Note :
CH2 AUDIO BIAS CURR. ADJ. procedure is same as CH1.

⊘ VR551
⊘ VR552

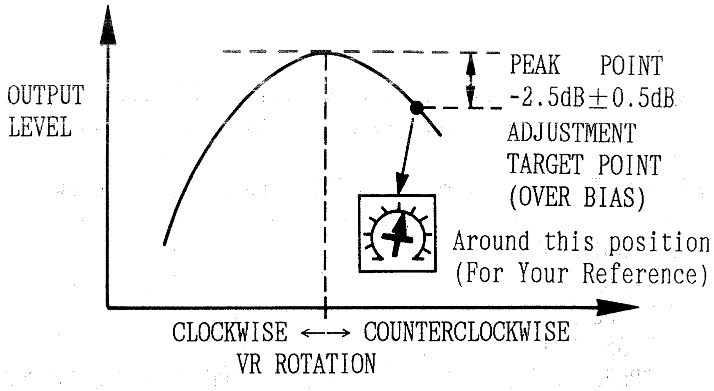
OUTPUT LEVEL
PEAK POINT
-2.5dB±0.5dB
ADJUSTMENT TARGET POINT (OVER BIAS)
Around this position (For Your Reference)
CLOCKWISE ←→ COUNTERCLOCKWISE
VR ROTATION

5-11-N. RECORDING EQUALIZER ADJUSTMENT (FOR AU-65 NTSC)

(W6 AUDIO)

TEST POINT	MODE	TAPE USED	M.EQ.	INPUT SIGNAL	ADJUSTMENT
CH1 LINE OUT CH2 LINE OUT	SELF REC/PB	BLANK TAPE	VTVM	1KHz ~ 15KHz Sinewave Signal -6dBm	VR203 (CH1 REC EQ1) SW201 VR403 (CH2 REC EQ1) SW401

Step 1. MACHINE CONDITION	1. Refer to Set Up Conditions at the beginning of this SECTION (AUDIO - W6 Machine Condition 5-1-N). 2. The Audio Bias Current Adjustment (Section 5-10) should be completed.
Step 2. 1. Supply a 1KHz sinewave signal at -6dBm (387.5 mVrms) to CH1 and CH2 inputs. 2. Insert a work cassette and place the unit in the recording mode. 3. During recording mode, change the Audio Frequency from 1KHz to 7.5KHz, 12.5KHz and 15KHz. 4. Play back the just recorded portion and confirm that the output level is within the specification as shown. 5. If it is not, adjust VR203 and SW201. 6. Repeat from Item 3 to 4 until the output level is in specification. Note : VR203 (VR403) : CH1 REC EQ (CH2 REC EQ) SW201 (SW401) : CH1 REC EQ (CH2 REC EQ) 1. CH2 REC EQ ADJ. procedure is same as CH1.	⊘ VR203 SW201 ⊘ VR403 SW401 SPECIFICATION : 1KHz ~ 7.5KHz = ± 1dB 7.5KHz ~ 15KHz = +1.5/-2.5dB (1KHz Reference)

5-11-P. RECORDING EQUALIZER ADJUSTMENT (FOR AU-65 PAL)

(W6 AUDIO)

TEST POINT	MODE	TAPE USED	M.EQ.	INPUT SIGNAL	ADJUSTMENT
CH1 LINE OUT CH2 LINE OUT	SELF REC/PB	BLANK TAPE	VTVM	1KHz ~ 15KHz Sinewave Signal -10dBu	VR203 (CH1 REC EQ1) SW201 VR403 (CH2 REC EQ1) SW401

Step 1. MACHINE CONDITION	1. Refer to Set Up Conditions at the beginning of this SECTION (AUDIO - W6 Machine Condition 5-1-P). 2. The Audio Bias Current Adjustment (Section 5-10) should be completed.
Step 2. 1. Supply a 1KHz sinewave signal at -10dBu to CH1 and CH2 inputs. 2. Insert a work cassette and place the unit in the recording mode. 3. During recording mode, change the Audio Frequency from 1KHz to 7.5KHz, 12.5KHz and 15KHz. 4. Play back the just recorded portion and confirm that the output level is within the specification as shown. 5. If it is not, adjust VR203 and SW201. 6. Repeat from Item 3 to 4 until the output level is in specification. Note : VR203 (VR403) : CH1 REC EQ (CH2 REC EQ) SW201 (SW401) : CH1 REC EQ (CH2 REC EQ) 1. CH2 REC EQ ADJ. procedure is same as CH1.	⊘ VR203 SW201 ⊘ VR403 SW401 SPECIFICATION : 1KHz ~ 7.5KHz = ± 1dB 7.5KHz ~ 15KHz = +1.5/-2.5dB (1KHz Reference)

5-12-N. RECORDING CURRENT ADJUSTMENT (FOR AU-65 NTSC)

(W6 AUDIO)

TEST POINT	MODE	TAPE USED	M.EQ.	INPUT SIGNAL	ADJUSTMENT
CH1 LINE OUT CH2 LINE OUT	SELF REC/PB	BLANK TAPE	VTVM	1KHz Sinewave Signal +4dBm	VR202 (CH1 REC CURR.) VR402 (CH2 REC CURR.)

Step 1. MACHINE CONDITION	Refer to Set Up Conditions at the beginning of this SECTION (AUDIO - W6 Machine Condition 5-1-N).
Step 2. 1. VTVM : CH1 LINE OUT CH2 LINE OUT 2. Make a recording. 3. Play back the just recorded portion, and confirm that the output level is +4dBm ± 0.2dBm at CH1 and CH2 outputs.	4. If it is not, adjust VR202 (VR402). 5. Repeat the Item 2 and 3 until the output level is +4dBm ± 0.2dB.

5-12-P. RECORDING CURRENT ADJUSTMENT (FOR AU-65 PAL)

(W6 AUDIO)

TEST POINT	MODE	TAPE USED	M.EQ.	INPUT SIGNAL	ADJUSTMENT
CH1 LINE OUT CH2 LINE OUT	SELF REC/PB	BLANK TAPE	VTVM	1KHz Sinewave Signal +0dBu	VR202 (CH1 REC CURR.) VR402 (CH2 REC CURR.)

Step 1. MACHINE CONDITION	Refer to Set Up Conditions at the beginning of this SECTION (AUDIO - W6 Machine Condition 5-1-P).
Step 2. 1. VTVM : CH1 LINE OUT CH2 LINE OUT 2. Make a recording. 3. Play back the just recorded portion, and confirm that the output level is +0dBu ± 0.2dBu at CH1 and CH2 outputs.	4. If it is not, adjust VR202 (VR402). 5. Repeat the Item 2 and 3 until the output level is +0dBu ± 0.2dB.

5-13-N. CH1 → CH2 CROSS TALK CANCEL ADJUSTMENT (FOR AU-65 NTSC)

(W6 AUDIO)

TEST POINT	MODE	TAPE USED	M.EQ.	INPUT SIGNAL	ADJUSTMENT
CH2 LINE OUT	CH1 INSERT	Cassette Shell (Without Tape)	VTVM	1KHz & 9KHz Sinewave Signal +4dBm	VR205 (CH1 HIGH CTC) VR206 (CH1 CTC LEVEL)

Step 1. MACHINE CONDITION	Refer to Set Up Conditions at the beginning of this SECTION (AUDIO - W6 Machine Condition 5-1-N). ∗Tape sides of Cassette Shell where end of tape detection occurs.
Step 2. 1. VTVM : CH2 LINE OUT 2. Supply a 1KHz sinewave signal at +4dBm to CH1 and CH2 Input. 3. Place the unit in the CH1 INSERT mode. 4. Confirm that the CH2 Audio Output Level is Less than -21dBm. 5. If it is not, adjust VR205 so that the CH2 Audio Output Level is less than -21dBm at CH2 LINE OUT.	Step 3. 1. VTVM : CH2 LINE OUT 2. Supply a 9KHz sinewave signal at +4dBm to CH1 and CH2 Input. 3. Place the unit in the CH1 INSERT mode. 4. Confirm that the CH2 Audio Output Level is Less than -21dBm. 5. If it is not, adjust VR206 so that the CH2 Audio Output Level is less than -21dBm at CH2 LINE OUT.

5-13-P. CH1 → CH2 CROSS TALK CANCEL ADJUSTMENT (FOR AU-65 PAL)

(W6 AUDIO)

TEST POINT	MODE	TAPE USED	M.EQ.	INPUT SIGNAL	ADJUSTMENT
CH2 LINE OUT	CH1 INSERT	Cassette Shell (Without Tape)	VTVM	1KHz & 9KHz Sinewave Signal +0dBu	VR205 (CH1 HIGH CTC) VR206 (CH1 CTC LEVEL)

Step 1. MACHINE CONDITION	Refer to Set Up Conditions at the beginning of this SECTION (AUDIO - W6 Machine Condition 5-1-P). ∗Tape sides of Cassette Shell where end of tape detection occurs.

Step 2.

1. VTVM : CH2 LINE OUT
2. Supply a 1KHz sinewave signal at +0dBu to CH1 and CH2 Input.
3. Place the unit in the CH1 INSERT mode.
4. Confirm that the CH2 Audio Output Level is Less than -25dBu.
5. If it is not, adjust VR205 so that the CH2 Audio Output Level is less than -25dBu at CH2 LINE OUT.

Step 3.

1. VTVM : CH2 LINE OUT
2. Supply a 9KHz sinewave signal at +0dBu to CH1 and CH2 Input.
3. Place the unit in the CH1 INSERT mode.
4. Confirm that the CH2 Audio Output Level is Less than -25dBu.
5. If it is not, adjust VR206 so that the CH2 Audio Output Level is less than -25dBu at CH2 LINE OUT.

5-14-N. CH2 → CH1 CROSS TALK CANCEL ADJUSTMENT (FOR AU-65 NTSC)

(W6 AUDIO)

TEST POINT	MODE	TAPE USED	M.EQ.	INPUT SIGNAL	ADJUSTMENT
CH1 LINE OUT	CH2 INSERT	BLANK TAPE (Without Tape)	VTVM	1KHz & 9KHz Sinewave Signal +4dBm	VR405 (CH2 HIGH CTC) VR406 (CH2 CTC LEVEL)

Step 1. MACHINE CONDITION	Refer to Set Up Conditions at the beginning of this SECTION (AUDIO - W6 Machine Condition 5-1-N). ∗Tape sides of Cassette Shell where end of tape detection occurs.

Step 2.	Step 3.
1. VTVM : CH1 LINE OUT	1. VTVM : CH1 LINE OUT
2. Supply a 1KHz sinewave signal at +4dBm to CH1 and CH2 Input.	2. Supply a 9KHz sinewave signal at +4dBm to CH1 and CH2 Input.
3. Place the unit in the CH2 INSERT mode.	3. Place the unit in the CH2 INSERT mode.
4. Confirm that the CH1 Audio Output Level is Less than -21dBm.	4. Confirm that the CH1 Audio Output Level is Less than -21dBm.
5. If it is not, adjust VR405 so that the CH1 Audio Output Level is less than -21dBm at CH1 LINE OUT.	5. If it is not, adjust VR406 so that the CH1 Audio Output Level is less than -21dBm at CH1 LINE OUT.

5-14-P. CH2 → CH1 CROSS TALK CANCEL ADJUSTMENT (FOR AU-65 PAL)

(W6 AUDIO)

TEST POINT	MODE	TAPE USED	M.EQ.	INPUT SIGNAL	ADJUSTMENT
CH1 LINE OUT	CH2 INSERT	BLANK TAPE (Without Tape)	VTVM	1KHz & 9KHz Sinewave Signal +0dBu	VR405 (CH2 HIGH CTC) VR406 (CH2 CTC LEVEL)

Step 1. MACHINE CONDITION	Refer to Set Up Conditions at the beginning of this SECTION (AUDIO - W6 Machine Condition 5-1-P). *Tape sides of Cassette Shell where end of tape detection occurs.
Step 2. 1. VTVM : CH1 LINE OUT 2. Supply a 1KHz sinewave signal at +0dBu to CH1 and CH2 Input. 3. Place the unit in the CH2 INSERT mode. 4. Confirm that the CH1 Audio Output Level is Less than -25dBu. 5. If it is not, adjust VR405 so that the CH1 Audio Output Level is less than -25dBu at CH1 LINE OUT.	Step 3. 1. VTVM : CH1 LINE OUT 2. Supply a 9KHz sinewave signal at +0dBu to CH1 and CH2 Input. 3. Place the unit in the CH2 INSERT mode. 4. Confirm that the CH1 Audio Output Level is Less than -25dBu. 5. If it is not, adjust VR406 so that the CH1 Audio Output Level is less than -25dBu at CH1 LINE OUT.

5-15-N. RECORDING PHASE ADJUSTMENT (FOR AU-65 NTSC)

(W6 AUDIO)

TEST POINT	MODE	TAPE USED	M.EQ.	INPUT SIGNAL	ADJUSTMENT
CH1 LINE OUT CH2 LINE OUT	SELF REC/PB	BLANK TAPE	OSCILLOSCOPE	15KHz Sinewave Signal +4dBm	VR201 (REC P. S.)

Step 1. MACHINE CONDITION	1. Refer to Set Up Conditions at the beginning of this SECTION (AUDIO - W6 Machine Condition 5-1-N). 2. The PLAYBACK MASTER PHASE ADJ. (5-6) should be completed before this adjustment is done.
Step 2. 1. SCOPE CH1 : CH1 LINE OUT SCOPE CH2 : CH2 LINE OUT 2. Make a recording. 3. Play back the just recorded portion. 4. Confirm that the phase difference is 0 ± 3.7μsec (±20°). 5. If it is not, adjust VR201 and repeat from Item 2 to Item 4 until the phase difference becomes 0 ± 3.7μsec (±20°).	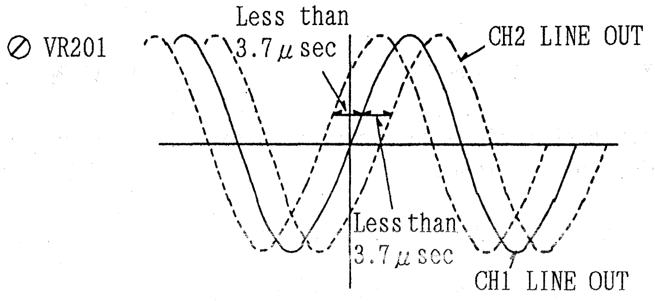 ⊘ VR201 Less than 3.7μsec CH2 LINE OUT Less than 3.7μsec CH1 LINE OUT or Place scope in X-Y mode and observe the pattern. Confirm both circles are in phase. 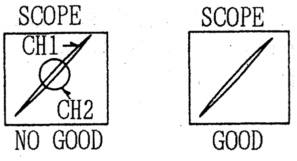 SCOPE CH1 CH2 NO GOOD SCOPE GOOD

5-15-P. RECORDING PHASE ADJUSTMENT (FOR AU-65 PAL)

(W6 AUDIO)

TEST POINT	MODE	TAPE USED	M.EQ.	INPUT SIGNAL	ADJUSTMENT
CH1 LINE OUT CH2 LINE OUT	SELF REC/PB	BLANK TAPE	OSCILLOSCOPE	15KHz Sinewave Signal +0dBu	VR201 (REC P. S.)

Step 1. MACHINE CONDITION	1. Refer to Set Up Conditions at the beginning of this SECTION (AUDIO - W6 Machine Condition 5-1-P). 2. The PLAYBACK MASTER PHASE ADJ. (5-6) should be completed before this adjustment is done.
Step 2. 1. SCOPE CH1 : CH1 LINE OUT SCOPE CH2 : CH2 LINE OUT 2. Make a recording. 3. Play back the just recorded portion. 4. Confirm that the phase difference is 0 ± 3.7μsec (±20°). 5. If it is not, adjust VR201 and repeat from Item 2 to Item 4 until the phase difference becomes 0 ± 3.7μsec (±20°).	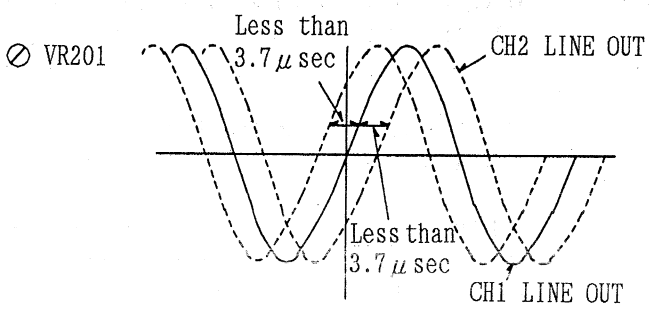 ⊘ VR201 Less than 3.7μsec CH2 LINE OUT Less than 3.7μsec CH1 LINE OUT or Place scope in X-Y mode and observe the pattern. Confirm both circles are in phase. 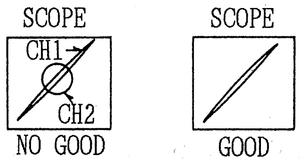 SCOPE CH1 CH2 NO GOOD SCOPE GOOD

5-16-P. MACHINE CONDITION SETTING
(FOR AU-63/62 PAL LINEAR AUDIO)

Set the switches on the Front Panel as follows except special condition for PAL VTR.

PB VR --------------------------------------- PRESET (PUSH)
METER SELECT -- LINEAR
DOLBY -- OFF
OUTPUT LEVEL SELECT (on the Audio I/O Board) --------------- +0dBu

5-16-N. MACHINE CONDITION SETTING
(FOR AU-63/62 NTSC LINEAR AUDIO)

Set the switches on the Front Panel as follows except special condition for NTSC VTR.

PB VR --------------------------------------- PRESET (PUSH)
METER SELECT -- LINEAR
DOLBY -- OFF
OUTPUT LEVEL SELECT (on the Audio I/O Board) --------------- +4dBm

5-17. PLAYBACK EQ CONFIRMATION
(FOR AU-62/63 NTSC & PAL)

(W6 AUDIO)

TEST POINT	MODE	TAPE USED	M.EQ.	INPUT SIGNAL	ADJUSTMENT
CH1 LINE OUT CH2 LINE OUT	PLAY	ALIGNMENT TAPE F. RESPONSE ADJ. PORTION	VTVM	----------	------------

Step 1. MACHINE CONDITION	Refer to Set Up Conditions at 5-16-N or 5-16-P Machine Condition Setting (for AU-63/62).
Step 2. 1. Play back the Frequency Response portion of the Alignment Tape. 2. Confirm that the specification is met.	SPECIFICATION : 1KHz ~ 7.5KHz = ± 1dB 7.5KHz ~ 15KHz = +1.5dB -2.5dB (1KHz Reference)

5-18. PLAYBACK MASTER PHASE CONFIRMATION
(FOR AU-62/63 NTSC & PAL)

(W6 AUDIO)

TEST POINT	MODE	TAPE USED	M.EQ.	INPUT SIGNAL	ADJUSTMENT
CH1 LINE OUT CH2 LINE OUT	PLAY	ALIGNMENT TAPE 15KHz PORTION	OSCILLOSCOPE	----------	A/C HEAD AZIMUTH ADJUSTMENT (MECHANICAL)

Step 1.

MACHINE CONDITION

1. Refer to Set Up Conditions at 5-16-N or 5-16-P Machine Condition Setting (for AU-63/62).
2. The PLAYBACK EQ CONFIRMATION (5-17) should be completed.

Step 2.

SCOPE CH1 : CH1 LINE OUT
SCOPE CH2 : CH2 LINE OUT

1. Play back the 15KHz portion of the Alignment Tape.
2. Confirm that the phase difference is 0 ± 2.8μsec (±15°).
3. If it is not, readjust the A/C Head Azimuth Mechanically (See Mech. Adj. Section).
4. After this adjustment is finished, reconfirm the PB EQ CONFIRMATION (5-17).

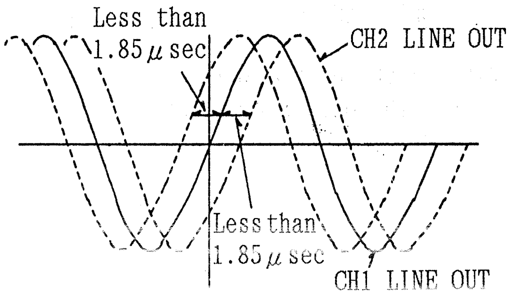

or Place scope in X-Y mode and observe the pattern. Confirm both circles are in phase.

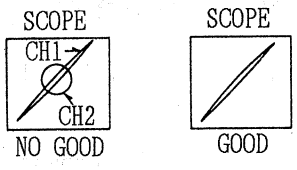

5-19. DOLBY DECODE LEVEL ADJUSTMENT
(FOR AU-62/63 NTSC & PAL)

(W6 AUDIO)

TEST POINT	MODE	TAPE USED	M.EQ.	INPUT SIGNAL	ADJUSTMENT
TP101 (CH1) TP301 (CH2)	PLAY	ALIGNMENT TAPE 1KHz 0VU PORTION	VTVM	----------	VR103 (CH1 PB GAIN) VR303 (CH2 PB GAIN)

Step 1.
MACHINE CONDITION

Refer to Set Up Conditions at 5-16-N or 5-16-P Machine Condition Setting (for AU-63/62).

Step 2.

VTVM : TP101 (CH1)
TP301 (CH2)

⊘ VR103, VR303

SPECIFICATION : -6dBm ± 0.2dB
(387.5mVrms)

5-20-N. PLAYBACK OUTPUT LEVEL ADJUSTMENT (FOR AU-62/63 NTSC)

(W6 AUDIO)

TEST POINT	MODE	TAPE USED	M.EQ.	INPUT SIGNAL	ADJUSTMENT
CH1 LINE OUT CH2 LINE OUT	PLAY	ALIGNMENT TAPE 1KHz OVU PORTION	VTVM	----------	VR3 (CH1 PB OUT) on Audio VR VR7 (CH2 PB OUT) on Audio VR
Step 1. MACHINE CONDITION			Refer to Set Up Conditions at 5-16-N Machine Condition Setting (for AU-63/62).		
Step 2. VTVM : CH1 LINE OUT CH2 LINE OUT 1. Adjust VR3 and VR7 on the Audio VR Board so that the output level is +4dBm ± 0.2dB.			⊘ VR3, 7 SPECIFICATION : +4dBm ± 0.2dB.		

5-20-P. PLAYBACK OUTPUT LEVEL ADJUSTMENT (FOR AU-62/63 PAL)

(W6 AUDIO)

TEST POINT	MODE	TAPE USED	M.EQ.	INPUT SIGNAL	ADJUSTMENT
CH1 LINE OUT CH2 LINE OUT	PLAY	ALIGNMENT TAPE 1KHz OVU PORTION	VTVM	----------	VR3 (CH1 PB OUT) on Audio VR VR7 (CH2 PB OUT) on Audio VR
Step 1. MACHINE CONDITION			Refer to Set up Conditions at 5-16-P Machine Condition Setting (for AU-63/62).		
Step 2. VTVM : CH1 LINE OUT CH2 LINE OUT 1. Adjust VR3 and VR7 on the Audio VR Board so that the output level is +0dBu ± 0.2dB.			⊘ VR3, 7 SPECIFICATION : +0dBu ± 0.2dB.		

5-21-N. METER LEVEL ADJUSTMENT (FOR AU-62/63 NTSC)

(W6 AUDIO)

TEST POINT	MODE	TAPE USED	M.EQ.	INPUT SIGNAL	ADJUSTMENT
CH1 METER CH2 METER	EJECT	ALIGNMENT TAPE 1KHz 0VU PORTION	-------	----------	VR101 (CH1 METER) on Front Interface VR102 (CH2 METER) on Front Interface

Step 1.
MACHINE CONDITION

Refer to Set Up Conditions at 5-16-N Machine Condition Setting (for AU-63/62).

Step 2.

1. Adjust VR101 (CH1) and VR102 (CH2) on the Front Interface Board so that the meter indicates "0" VU as shown.

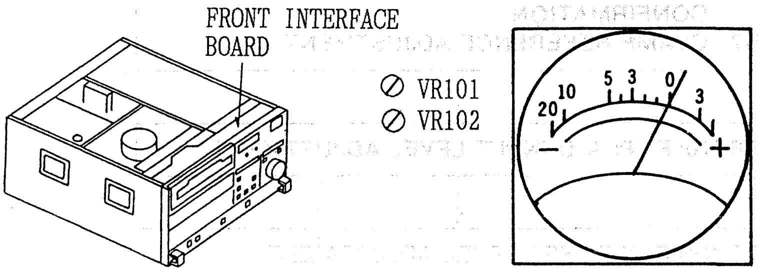

5-21-P. METER LEVEL ADJUSTMENT (FOR AU-62/63 PAL)

(W6 AUDIO)

TEST POINT	MODE	TAPE USED	M.EQ.	INPUT SIGNAL	ADJUSTMENT
CH1 METER CH2 METER	EJECT	ALIGNMENT TAPE 1KHz 0VU PORTION	-------	----------	VR101 (CH1 METER) on Front Interface VR102 (CH2 METER) on Front Interface

Step 1.
MACHINE CONDITION

Refer to Set Up Conditions at 5-16-P Machine Condition Setting (for AU-63/62).

Step 2.

1. Adjust VR101 (CH1) and VR102 (CH2) on the Front Interface Board so that the meter indicates "-4" VU as shown.

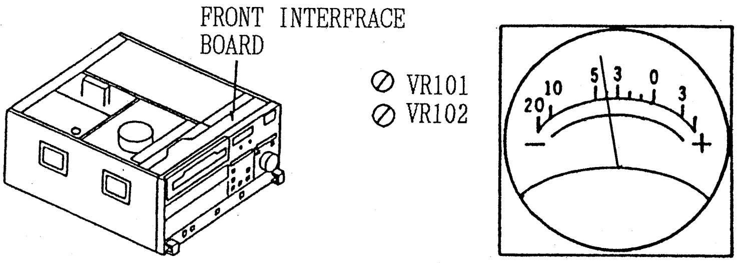

6. DECODER & CTCM (W4) BOARD (1/2) (FOR AU-65 ONLY)

DECODER & CTCM SECTION (1/2) (W4) FLOWCHART FOR AU-65

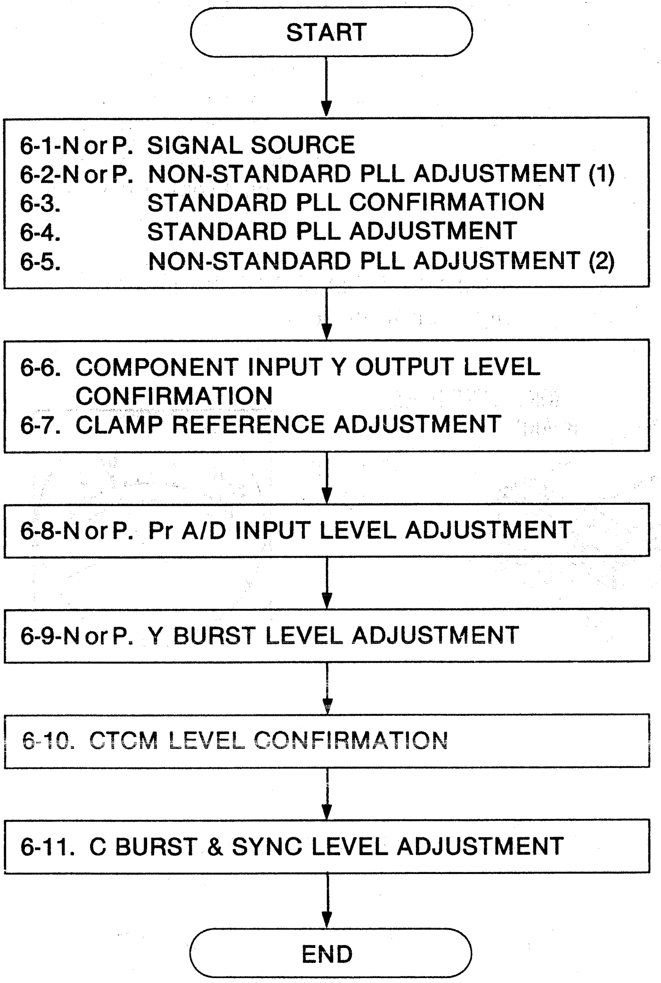

START
6-1-N or P. SIGNAL SOURCE
6-2-N or P. NON-STANDARD PLL ADJUSTMENT (1)
6-3. STANDARD PLL CONFIRMATION
6-4. STANDARD PLL ADJUSTMENT
6-5. NON-STANDARD PLL ADJUSTMENT (2)
6-6. COMPONENT INPUT Y OUTPUT LEVEL CONFIRMATION
6-7. CLAMP REFERENCE ADJUSTMENT
6-8-N or P. Pr A/D INPUT LEVEL ADJUSTMENT
6-9-N or P. Y BURST LEVEL ADJUSTMENT
6-10. CTCM LEVEL CONFIRMATION
6-11. C BURST & SYNC LEVEL ADJUSTMENT
END

6. DECODER & CTCM (W4) BOARD (1/2) (FOR AU-65 ONLY)

6-1-N. SIGNAL SOURCE (NTSC)

(W4 DEC & CTCM)

Confirm the Signal Level of Signal Generator as follows.

1. COMPOSITE SIGNAL (NTSC)
   75% (with 7.5% SET UP)
   VIDEO LEVEL = 0.714Vp-p
   SYNC LEVEL = 0.286Vp-p
2. COMPONENT SIGNAL (NTSC)
   75% (with 7.5% SET UP)
   Y VIDEO LEVEL = 0.7Vp-p
   Y SYNC LEVEL = 0.3Vp-p
   PB LEVEL = 0.486Vp-p
   PR LEVEL = 0.486Vp-p
3. Y/C SIGNAL (NTSC)
   75% (with 7.5% SET UP)
   Y VIDEO LEVEL = 0.714Vp-p
   Y SYNC LEVEL = 0.286Vp-p
   CHROMA LEVEL = 0.629Vp-p
4. DUB (CTCM) SIGNAL (NTSC)
   75% (with 7.5% SET UP)
   Y VIDEO LEVEL = 0.714Vp-p
   Y SYNC LEVEL = 0.286Vp-p
   CTCM (PR) LEVEL = 0.7Vp-p

6-1-P. SIGNAL SOURCE (PAL)

(W4 DEC & CTCM)

Confirm the Signal Level of Signal Generator as follows.

1. COMPOSITE SIGNAL (PAL)
   100% (without SET UP)
   VIDEO LEVEL = 0.7Vp-p
   SYNC LEVEL = 0.3Vp-p
2. COMPONENT SIGNAL (PAL)
   100% (without SET UP)
   Y VIDEO LEVEL = 0.7Vp-p
   Y SYNC LEVEL = 0.3Vp-p
   PB LEVEL = 0.7Vp-p
   PR LEVEL = 0.7Vp-p
3. Y/C SIGNAL (PAL)
   100% (without SET UP)
   Y VIDEO LEVEL = 0.7Vp-p
   Y SYNC LEVEL = 0.3Vp-p
   CHROMA LEVEL = 0.885Vp-p
4. DUB (CTCM) SIGNAL (PAL)
   100% (without SET UP)
   Y VIDEO LEVEL = 0.7Vp-p
   Y SYNC LEVEL = 0.3Vp-p
   CTCM (PR) LEVEL = 0.7Vp-p

6-2-N. NON-STANDARD PLL ADJUSTMENT (1) (FOR AU-65 NTSC)

(W4 DEC & CTCM)

TEST POINT	MODE	TAPE USED	M.EQ.	INPUT SIGNAL	ADJUSTMENT
TP701	E-E (EJECT)	------	Digital Voltage Meter (OSCILLOSCOPE)	COMPONENT 75% COLOR BAR	VL701 (NSTD OFFSET) VR702 (PLL POS 1)

Step 1. MACHINE CONDITION	STD/NSTD SELECT : NSTD (Set Up Menu)
Step 2. 1. D. V. M. (SCOPE) : TP701 2. Adjust VL701 so that the DC voltage is 0 ± 0.2V (DC) at TP701.	⊘ VL701 TP701 = 0 ± 0.2V (DC)
Step 3. 1. Set VR702 as shown in figure.	VR702 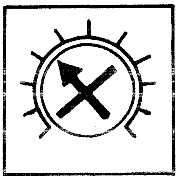

6-2-P. NON-STANDARD PLL ADJUSTMENT (1) (FOR AU-65 PAL)

(W4 DEC & CTCM)

TEST POINT	MODE	TAPE USED	M.EQ.	INPUT SIGNAL	ADJUSTMENT
TP701	E-E (EJECT)	------	Digital Voltage Meter (OSCILLOSCOPE)	COMPONENT 100% COLOR BAR	VL701 (NSTD OFFSET) VR702 (PLL POS 1)

Step 1. MACHINE CONDITION	STD/NSTD SELECT : NSTD (Set Up Menu)
Step 2. 1. D. V. M. (SCOPE) : TP701 2. Adjust VL701 so that the DC voltage is 0 ± 0.2V (DC) at TP701.	⊘ VL701 TP701 = 0 ± 0.2V (DC)
Step 3. 1. Set VR702 as shown in figure.	VR702 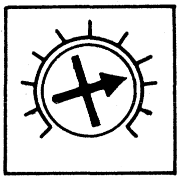

6-3. STANDARD PLL CONFIRMATION (FOR AU-65 NTSC & PAL)

(W4 DEC & CTCM)

<table>
<tr><th>TEST POINT</th><th>MODE</th><th>TAPE USED</th><th>M.EQ.</th><th>INPUT SIGNAL</th><th>ADJUSTMENT</th></tr>
<tr><td>TP702</td><td>E-E
(EJECT)</td><td>------</td><td>OSCILLOSCOPE</td><td>COMPONENT
COLOR BAR</td><td>------------</td></tr>
<tr><td colspan="3">Step 1.
MACHINE CONDITION
(STD mode)</td><td colspan="3">1. Set-up Menu No. 1011 → 00 FRONT SWITCH
2. Input signal is standard signal from signal generator.</td></tr>
<tr><td colspan="3">Step 2.
1. SCOPE : TP702
2. Confirm that the DC voltage is 0 ± 1V (DC) at TP702.</td><td colspan="3">TP702 = 0 ± 1V (DC)</td></tr>
</table>

6-4. STANDARD PLL ADJUSTMENT (FOR AU-65 NTSC & PAL)

(W4 DEC & CTCM)

<table>
<tr><th>TEST POINT</th><th>MODE</th><th>TAPE USED</th><th>M.EQ.</th><th>INPUT SIGNAL</th><th>ADJUSTMENT</th></tr>
<tr><td>TP504</td><td>E-E
(EJECT)</td><td>------</td><td>OSCILLOSCOPE</td><td>COMPONENT
COLOR BAR</td><td>VR703 (PLL POS 2)</td></tr>
<tr><td colspan="3">Step 1.
MACHINE CONDITION
(STD mode)</td><td colspan="3">1. Set-up Menu No. 1011 → 00 FRONT SWITCH
2. Input signal is standard signal from signal generator.</td></tr>
<tr><td colspan="3">Step 2.
1. SCOPE : TP504
2. Trigger the scope at composite sync of signal generator.
3. Change the STD/NSTD by Set-up Menu alternately.
4. Confirm that the phase difference ("A") is less than 10 nsec.</td><td colspan="3">TP504 ⊘ VR703
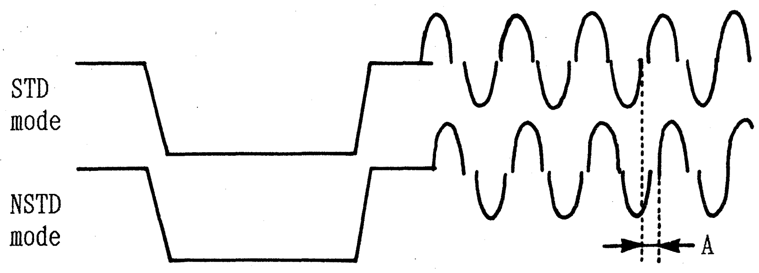
A = Less than 10 nsec.</td></tr>
</table>

6-5. NON-STANDARD PLL ADJUSTMENT (2)
(FOR AU-65 NTSC & PAL)

(W4 DEC & CTCM)

TEST POINT	MODE	TAPE USED	M.EQ.	INPUT SIGNAL	ADJUSTMENT
TP703	E-E (EJECT)	------	OSCILLOSCOPE	COMPONENT COLOR BAR	VR702 (PLL POS 1)

Step 1. MACHINE CONDITION (STD mode)	1. Set-up Menu No. 1011 → 00 FRONT SWITCH 2. Input signal is standard signal from signal generator.
Step 2. 1. SCOPE : TP703 2. Trigger the scope at composite sync of signal generator. 3. Change the STD/NSTD by Set-up Menu alternately. 4. Confirm that the pulse position is same at STD mode and NSTD mode. (STD mode is reference) 5. If it is not, adjust VR702 so that the NSTD pulse position is same as STD pulse position. (Less than ± 10 n sec.)	TP703 ⊘ VR702 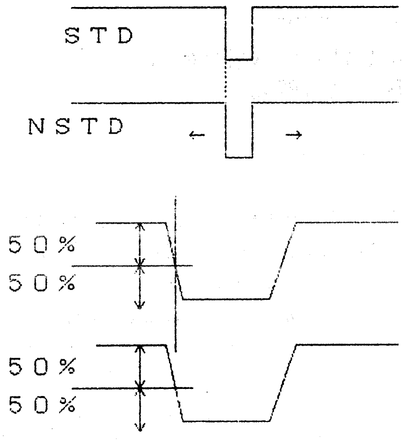

6-6. COMPONENT INPUT Y OUTPUT LEVEL CONFIRMATION (FOR AU-65 NTSC & PAL)

(W4 DEC & CTCM)

TEST POINT	MODE	TAPE USED	M.EQ.	INPUT SIGNAL	ADJUSTMENT
TP504	E-E (EJECT)	------	OSCILLOSCOPE	COMPONENT 100% COLOR BAR	------------

Step 1. MACHINE CONDITION	1. INPUT SELECT : COMPONENT (on Pull Out Drawer) 2. YC/COMPONENT SELECT : COMPONENT (on Front Sub Panel)
Step 2. [NTSC] 1. SCOPE : TP504 2. Confirm that the VIDEO Level (A) is 570 ± 30mVp-p.	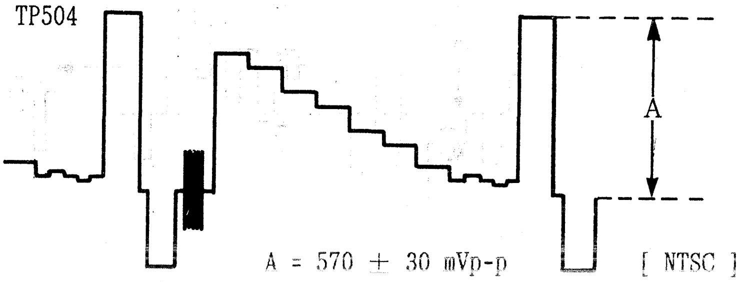 TP504 A A = 570 ± 30 mVp-p [NTSC]
Step 2. [PAL] 1. SCOPE : TP504 2. Confirm that the VIDEO Level (A) is 570 ± 30mVp-p.	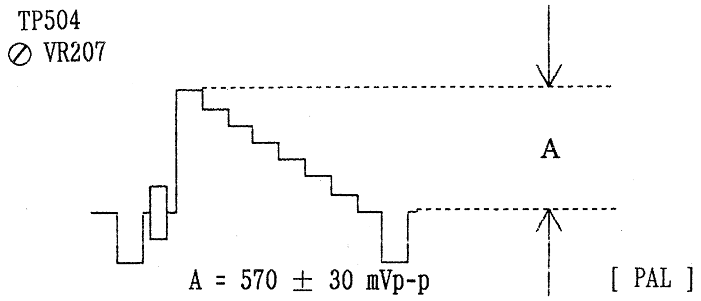 TP504 ⊘ VR207 A A = 570 ± 30 mVp-p [PAL]

6-7. CLAMP REFERENCE ADJUSTMENTENT (FOR AU-65 NTSC & PAL)

(W4 DEC & CTCM)

TEST POINT	MODE	TAPE USED	M.EQ.	INPUT SIGNAL	ADJUSTMENT
TP601	E-E (EJECT)	-------	OSCILLOSCOPE	COMPONENT COLOR BAR	VR601 (PB CLAMP REF) VR602 (PR CLAMP REF)

Step 1.

1. Adjust VR601 and VR602 so that level differences of "A" and "B" portion are minimum as shown in figure.

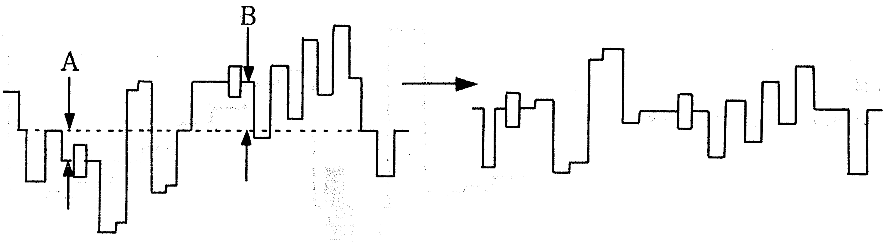

Note:
Expand the level of measurement portion on scope for precise adjustment.

6-8-N. Pr A/D INPUT LEVEL ADJUSTMENT (FOR AU-65 NTSC)

(W4 DEC & CTCM)

TEST POINT	MODE	TAPE USED	M.EQ.	INPUT SIGNAL	ADJUSTMENT
TP601	E-E (EJECT)	-------	OSCILLOSCOPE	COMPONENT 100% COLOR BAR	VR501 (Pr LEV. 2) SW701

Step 1.

CONDITION

SCOPE SETTING
1. This adjustment needs 1 : 1 probe.
2. MODE : ADD

Step 2.

1. SCOPE CH1 : TP601
   SCOPE CH2 : NO SIGNAL
2. SW701 : ADJ side
3. Adjust VR501 so that the cyan portion level becomes just saturated level as shown in figure.

Step 3.

1. SCOPE SETTING : 50mV/DIV.
2. Adjust VR501 so that the cyan portion level is offset by 12mV from the saturated point as shown in figure.
3. SW701 : NORM side

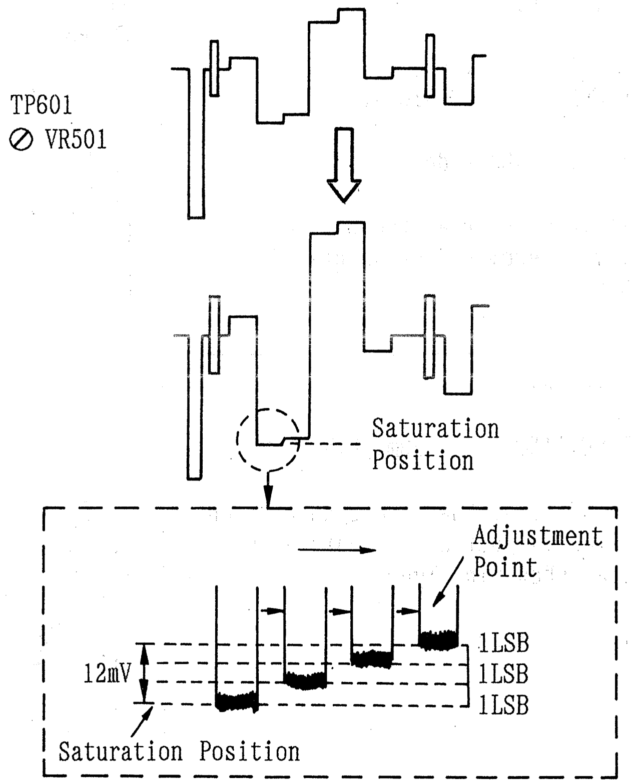

TP601
⊘ VR501
Saturation
Position
Adjustment
Point
12mV
1LSB
1LSB
1LSB
Saturation Position

6-8-P. Pr A/D INPUT LEVEL ADJUSTMENT (FOR AU-65 PAL)

(W4 DEC & CTCM)

TEST POINT	MODE	TAPE USED	M.EQ.	INPUT SIGNAL	ADJUSTMENT
TP601	E-E (EJECT)	-------	OSCILLOSCOPE	COMPONENT OVERSIZE RAMP	VR501 (Pr LEV. 2) SW701

Step 1.

CONDITION

SCOPE SETTING

1. This adjustment needs 1 : 1 probe.
2. MODE : ADD

Step 2. (CORSE)

1. SCOPE CH1 : TP601
   SCOPE CH2 : NO SIGNAL
2. SW701 : ADJ side
3. Adjust VR501 so that the portion (A) level becomes just saturated as shown in figure.

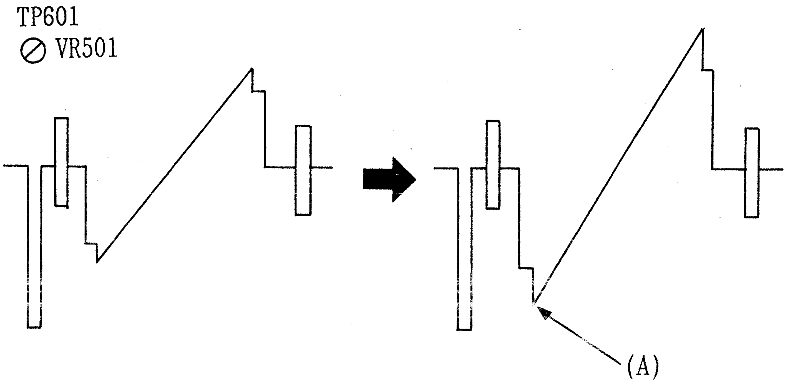

Step 3. (FINE)

1. SCOPE SETTING : 50mV/DIV.
2. Adjust VR501 so that the cyan portion (A) level is just at the saturation point as shown in figure.
3. SW701 : NORM side

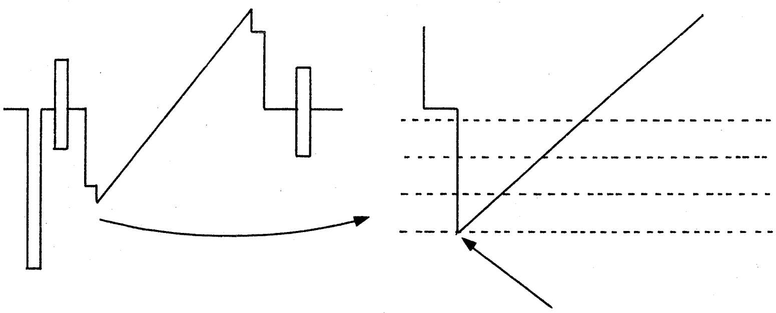

6-9-N. Y BURST LEVEL ADJUSTMENT (FOR AU-65 NTSC)

(W4 DEC & CTCM)

TEST POINT	MODE	TAPE USED	M.EQ.	INPUT SIGNAL	ADJUSTMENT
TP504	E-E (EJECT)	-------	OSCILLOSCOPE	COMPONENT 75% COLOR BAR	VR503 (Y BU LEV.)

Step 1.

1. SCOPE : TP504
2. Adjust VR503 so that A : B = 10 : 3 ± 0.3 as shown in figure.

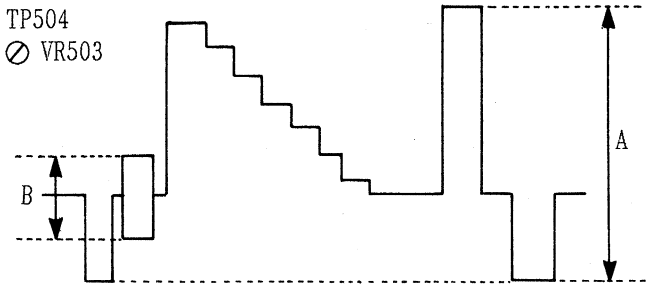

A : B = 10 : 3 ± 0.3

6-9-P. Y BURST LEVEL ADJUSTMENT (FOR AU-65 PAL)

(W4 DEC & CTCM)

TEST POINT	MODE	TAPE USED	M.EQ.	INPUT SIGNAL	ADJUSTMENT
TP504	E-E (EJECT)	-------	OSCILLOSCOPE	COMPONENT 100% COLOR BAR	VR503 (Y BU LEV.)

Step 1.

1. SCOPE : TP504
2. Adjust VR503 so that A : B = 7 : 3 ± 0.3 as shown in figure.

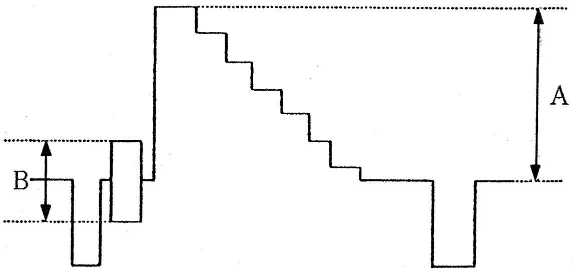

A : B = 7 : 3 ± 0.3

6-10. CTCM LEVEL CONFIRMATION (FOR AU-65 NTSC & PAL)

(W4 DEC & CTCM)

TEST POINT	MODE	TAPE USED	M.EQ.	INPUT SIGNAL	ADJUSTMENT
TP601	E-E (EJECT)	-------	OSCILLOSCOPE	COMPONENT COLOR BAR (NTSC 75%) (PAL 100%)	VR604 (CTCM LEV.)

Step 1.

1. SCOPE : TP601
2. Adjust VR604 so that the Pr peak to peak level (A) is 670 ± 8mVp-p.

TP601

⊘ VR604

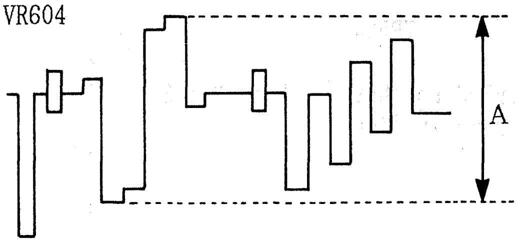

A = 670 ± 8mVp-p

6-11. C BURST & SYNC LEVEL ADJUSTMENT (FOR AU-65 NTSC & PAL)

(W4 DEC & CTCM)

TEST POINT	MODE	TAPE USED	M.EQ.	INPUT SIGNAL	ADJUSTMENT
TP601	E-E (EJECT)	-------	OSCILLOSCOPE	COMPONENT COLOR BAR (NTSC 75%) (PAL 100%)	VR504 (C BU LEV.) VR603 (C SY LEV.)

Step 1.

1. SCOPE : TP601
2. Adjust VR504 so that A : B (C) = 7 : 3 (± 0.09) as shown in figure set A to 7 divisions using uncal contorol.
3. Adjust VR603 so that A : D = 7 : 6.5 (± 0.2) as shown in figure.

Note:
When adjust VR504, expand the time/div of the scope.

TP601

⊘ VR504

⊘ VR603

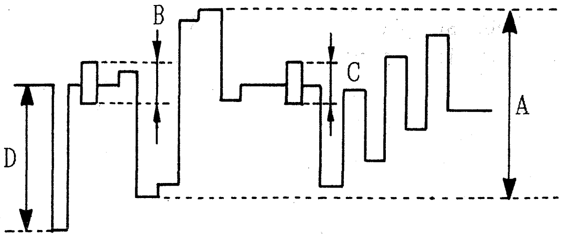

A : B (C) = 7 : 3 (± 0.09)
A : D = 7 : 6.5 (± 0.2)

7. MODULATION & DEMODULATION (W3) BOARD (1/2)

MODULATION & DEMODULATION SECTION (1/2) (W3)
FLOWCHART FOR AU-65

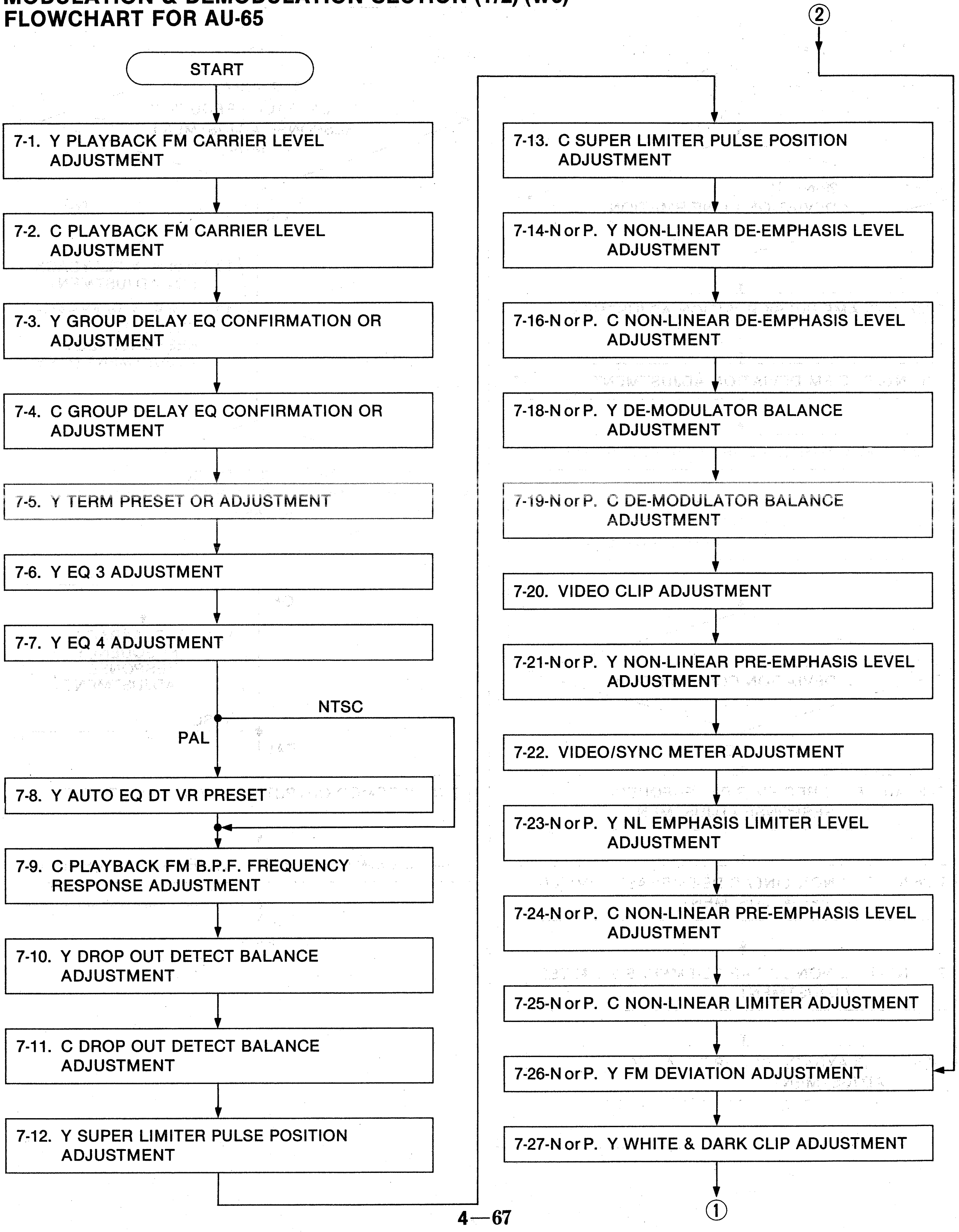
②
START
7-1. Y PLAYBACK FM CARRIER LEVEL ADJUSTMENT
7-2. C PLAYBACK FM CARRIER LEVEL ADJUSTMENT
7-3. Y GROUP DELAY EQ CONFIRMATION OR ADJUSTMENT
7-4. C GROUP DELAY EQ CONFIRMATION OR ADJUSTMENT
7-5. Y TERM PRESET OR ADJUSTMENT
7-6. Y EQ 3 ADJUSTMENT
7-7. Y EQ 4 ADJUSTMENT
NTSC
PAL
7-8. Y AUTO EQ DT VR PRESET
7-9. C PLAYBACK FM B.P.F. FREQUENCY RESPONSE ADJUSTMENT
7-10. Y DROP OUT DETECT BALANCE ADJUSTMENT
7-11. C DROP OUT DETECT BALANCE ADJUSTMENT
7-12. Y SUPER LIMITER PULSE POSITION ADJUSTMENT
7-13. C SUPER LIMITER PULSE POSITION ADJUSTMENT
7-14-N or P. Y NON-LINEAR DE-EMPHASIS LEVEL ADJUSTMENT
7-16-N or P. C NON-LINEAR DE-EMPHASIS LEVEL ADJUSTMENT
7-18-N or P. Y DE-MODULATOR BALANCE ADJUSTMENT
7-19-N or P. C DE-MODULATOR BALANCE ADJUSTMENT
7-20. VIDEO CLIP ADJUSTMENT
7-21-N or P. Y NON-LINEAR PRE-EMPHASIS LEVEL ADJUSTMENT
7-22. VIDEO/SYNC METER ADJUSTMENT
7-23-N or P. Y NL EMPHASIS LIMITER LEVEL ADJUSTMENT
7-24-N or P. C NON-LINEAR PRE-EMPHASIS LEVEL ADJUSTMENT
7-25-N or P. C NON-LINEAR LIMITER ADJUSTMENT
7-26-N or P. Y FM DEVIATION ADJUSTMENT
7-27-N or P. Y WHITE & DARK CLIP ADJUSTMENT
①

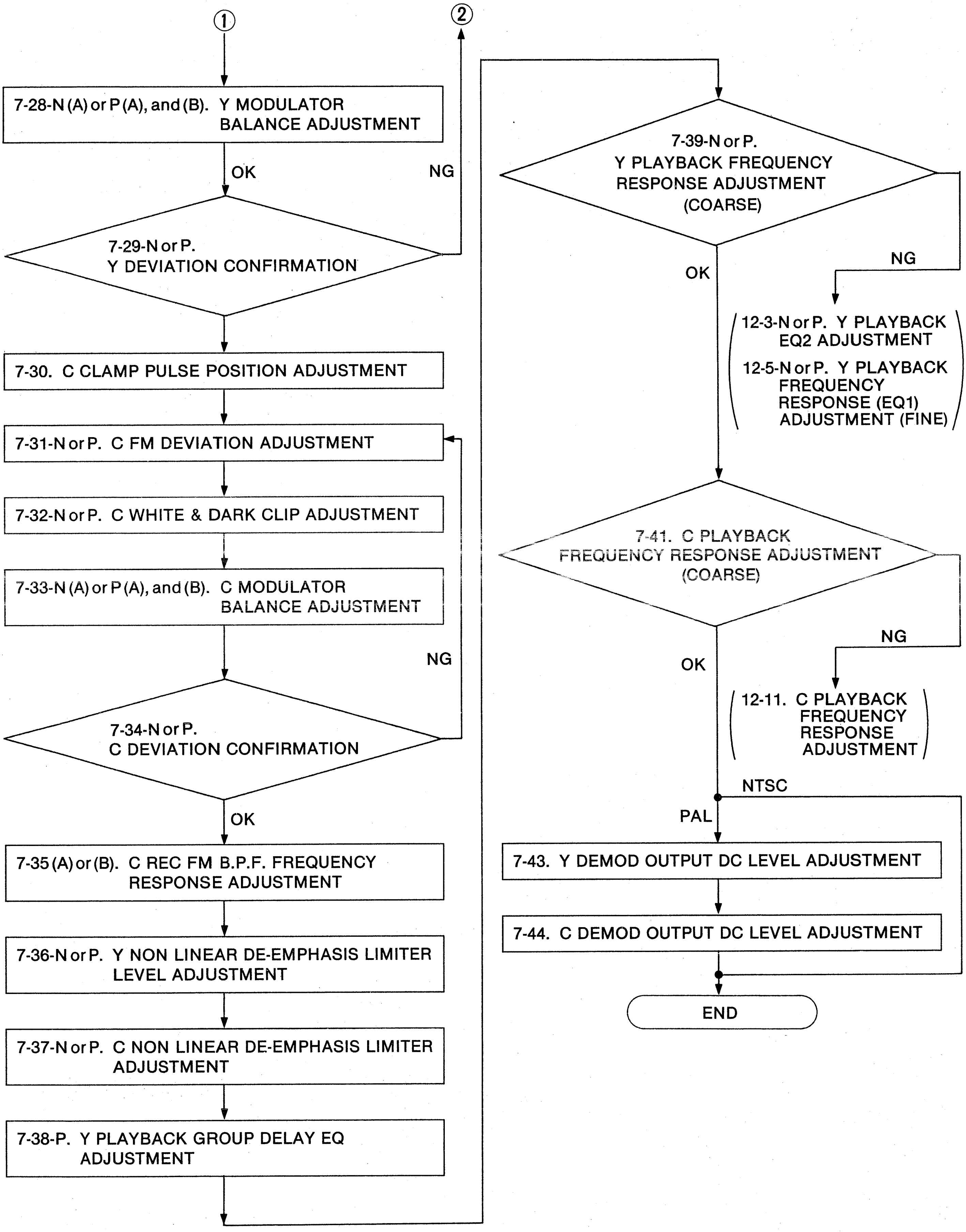
①
②
7-28-N (A) or P (A), and (B). Y MODULATOR BALANCE ADJUSTMENT
OK
NG
7-29-N or P. Y DEVIATION CONFIRMATION
7-30. C CLAMP PULSE POSITION ADJUSTMENT
7-31-N or P. C FM DEVIATION ADJUSTMENT
7-32-N or P. C WHITE & DARK CLIP ADJUSTMENT
7-33-N (A) or P (A), and (B). C MODULATOR BALANCE ADJUSTMENT
NG
7-34-N or P. C DEVIATION CONFIRMATION
OK
7-35 (A) or (B). C REC FM B.P.F. FREQUENCY RESPONSE ADJUSTMENT
7-36-N or P. Y NON LINEAR DE-EMPHASIS LIMITER LEVEL ADJUSTMENT
7-37-N or P. C NON LINEAR DE-EMPHASIS LIMITER ADJUSTMENT
7-38-P. Y PLAYBACK GROUP DELAY EQ ADJUSTMENT
7-39-N or P. Y PLAYBACK FREQUENCY RESPONSE ADJUSTMENT (COARSE)
NG
OK
12-3-N or P. Y PLAYBACK EQ2 ADJUSTMENT
12-5-N or P. Y PLAYBACK FREQUENCY RESPONSE (EQ1) ADJUSTMENT (FINE)
7-41. C PLAYBACK FREQUENCY RESPONSE ADJUSTMENT (COARSE)
NG
OK
12-11. C PLAYBACK FREQUENCY RESPONSE ADJUSTMENT
NTSC
PAL
7-43. Y DEMOD OUTPUT DC LEVEL ADJUSTMENT
7-44. C DEMOD OUTPUT DC LEVEL ADJUSTMENT
END

MODULATION & DEMODULATION SECTION (1/2) FLOWCHART (W3) FOR AU-63

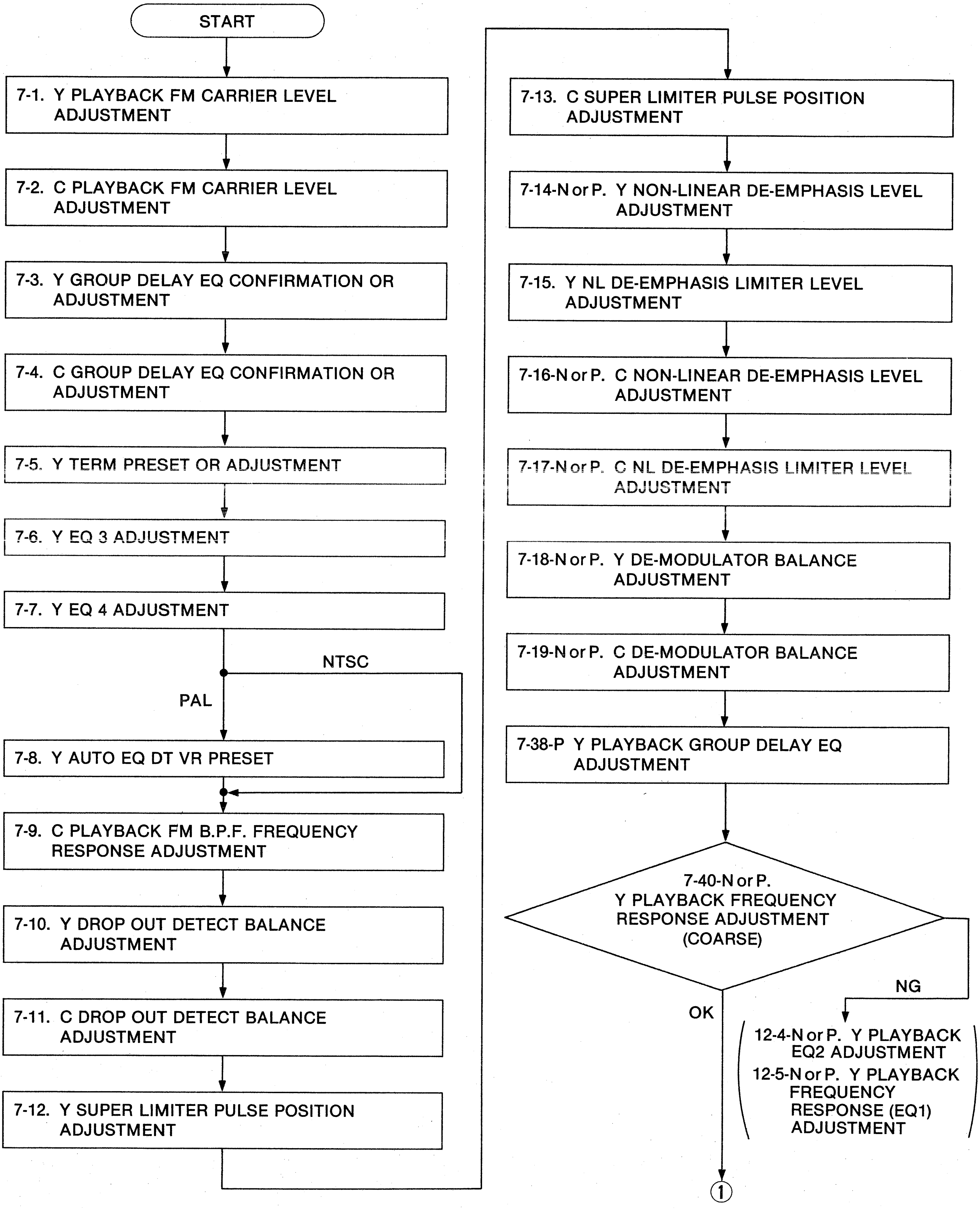
START
7-1. Y PLAYBACK FM CARRIER LEVEL ADJUSTMENT
7-2. C PLAYBACK FM CARRIER LEVEL ADJUSTMENT
7-3. Y GROUP DELAY EQ CONFIRMATION OR ADJUSTMENT
7-4. C GROUP DELAY EQ CONFIRMATION OR ADJUSTMENT
7-5. Y TERM PRESET OR ADJUSTMENT
7-6. Y EQ 3 ADJUSTMENT
7-7. Y EQ 4 ADJUSTMENT
NTSC
PAL
7-8. Y AUTO EQ DT VR PRESET
7-9. C PLAYBACK FM B.P.F. FREQUENCY RESPONSE ADJUSTMENT
7-10. Y DROP OUT DETECT BALANCE ADJUSTMENT
7-11. C DROP OUT DETECT BALANCE ADJUSTMENT
7-12. Y SUPER LIMITER PULSE POSITION ADJUSTMENT
7-13. C SUPER LIMITER PULSE POSITION ADJUSTMENT
7-14-N or P. Y NON-LINEAR DE-EMPHASIS LEVEL ADJUSTMENT
7-15. Y NL DE-EMPHASIS LIMITER LEVEL ADJUSTMENT
7-16-N or P. C NON-LINEAR DE-EMPHASIS LEVEL ADJUSTMENT
7-17-N or P. C NL DE-EMPHASIS LIMITER LEVEL ADJUSTMENT
7-18-N or P. Y DE-MODULATOR BALANCE ADJUSTMENT
7-19-N or P. C DE-MODULATOR BALANCE ADJUSTMENT
7-38-P Y PLAYBACK GROUP DELAY EQ ADJUSTMENT
7-40-N or P. Y PLAYBACK FREQUENCY RESPONSE ADJUSTMENT (COARSE)
NG
OK
12-4-N or P. Y PLAYBACK EQ2 ADJUSTMENT
12-5-N or P. Y PLAYBACK FREQUENCY RESPONSE (EQ1) ADJUSTMENT
①

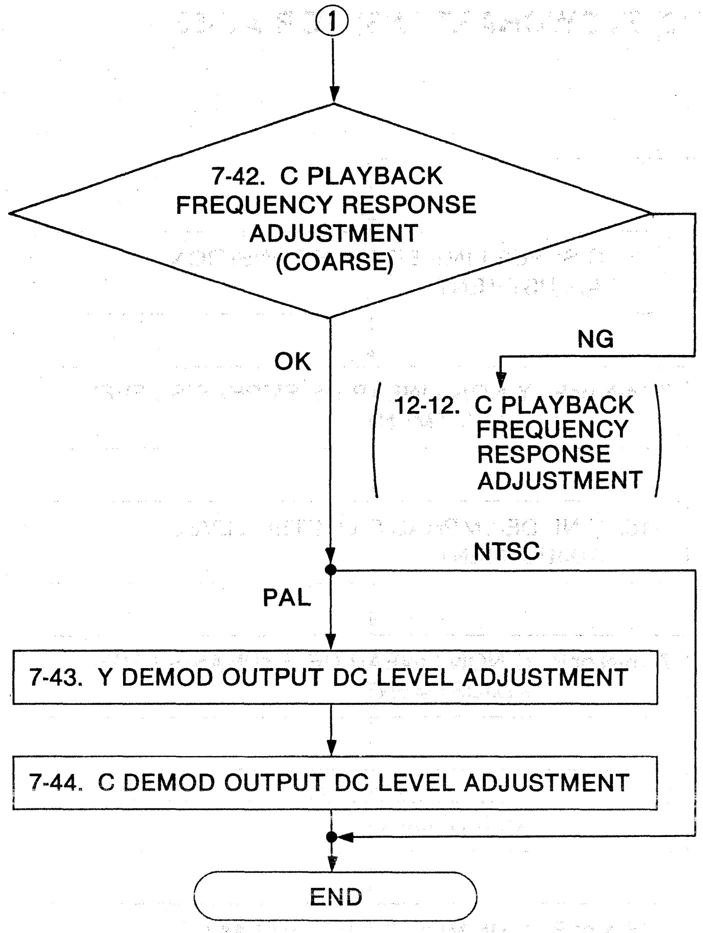
①
7-42. C PLAYBACK FREQUENCY RESPONSE ADJUSTMENT (COARSE)
OK
NG
12-12. C PLAYBACK FREQUENCY RESPONSE ADJUSTMENT
NTSC
PAL
7-43. Y DEMOD OUTPUT DC LEVEL ADJUSTMENT
7-44. C DEMOD OUTPUT DC LEVEL ADJUSTMENT
END

MODULATION & DEMODULATION SECTION (1/2) (W3) FLOWCHART FOR AU-62

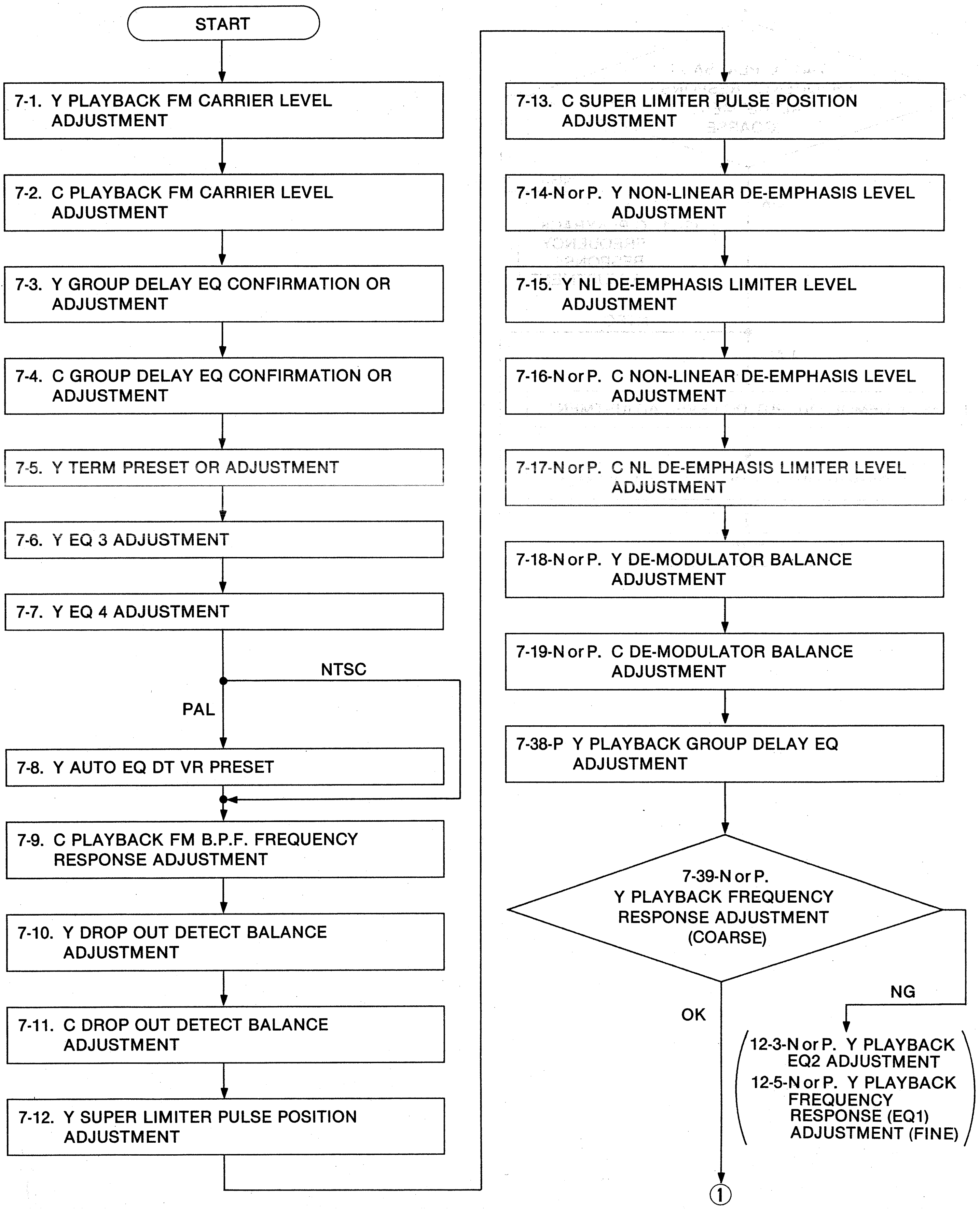
START
7-1. Y PLAYBACK FM CARRIER LEVEL ADJUSTMENT
7-2. C PLAYBACK FM CARRIER LEVEL ADJUSTMENT
7-3. Y GROUP DELAY EQ CONFIRMATION OR ADJUSTMENT
7-4. C GROUP DELAY EQ CONFIRMATION OR ADJUSTMENT
7-5. Y TERM PRESET OR ADJUSTMENT
7-6. Y EQ 3 ADJUSTMENT
7-7. Y EQ 4 ADJUSTMENT
NTSC
PAL
7-8. Y AUTO EQ DT VR PRESET
7-9. C PLAYBACK FM B.P.F. FREQUENCY RESPONSE ADJUSTMENT
7-10. Y DROP OUT DETECT BALANCE ADJUSTMENT
7-11. C DROP OUT DETECT BALANCE ADJUSTMENT
7-12. Y SUPER LIMITER PULSE POSITION ADJUSTMENT
7-13. C SUPER LIMITER PULSE POSITION ADJUSTMENT
7-14-N or P. Y NON-LINEAR DE-EMPHASIS LEVEL ADJUSTMENT
7-15. Y NL DE-EMPHASIS LIMITER LEVEL ADJUSTMENT
7-16-N or P. C NON-LINEAR DE-EMPHASIS LEVEL ADJUSTMENT
7-17-N or P. C NL DE-EMPHASIS LIMITER LEVEL ADJUSTMENT
7-18-N or P. Y DE-MODULATOR BALANCE ADJUSTMENT
7-19-N or P. C DE-MODULATOR BALANCE ADJUSTMENT
7-38-P Y PLAYBACK GROUP DELAY EQ ADJUSTMENT
7-39-N or P. Y PLAYBACK FREQUENCY RESPONSE ADJUSTMENT (COARSE)
OK
NG
12-3-N or P. Y PLAYBACK EQ2 ADJUSTMENT
12-5-N or P. Y PLAYBACK FREQUENCY RESPONSE (EQ1) ADJUSTMENT (FINE)
①

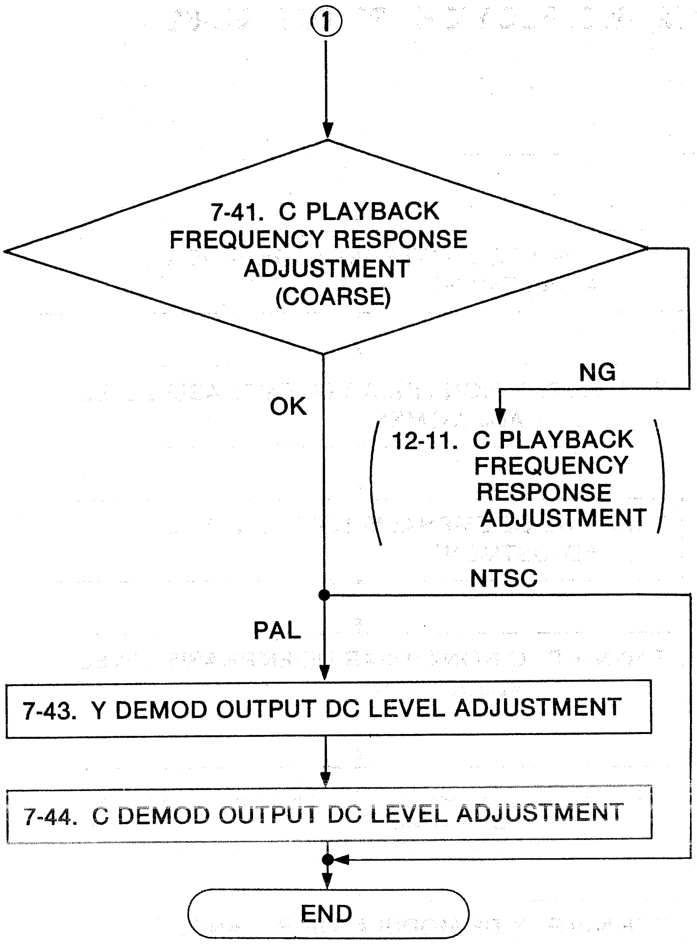
①
7-41. C PLAYBACK FREQUENCY RESPONSE ADJUSTMENT (COARSE)
NG
OK
12-11. C PLAYBACK FREQUENCY RESPONSE ADJUSTMENT
NTSC
PAL
7-43. Y DEMOD OUTPUT DC LEVEL ADJUSTMENT
7-44. C DEMOD OUTPUT DC LEVEL ADJUSTMENT
END

7. MODULATION & DEMODULATION (W3) BOARD (1/2)

7-1. Y PLAYBACK FM CARRIER LEVEL ADJUSTMENT (FOR AU-65/AU-63/AU-62 NTSC & PAL)

(W3: MOD & DEMOD)

TEST POINT	MODE	TAPE USED	M.EQ.	INPUT SIGNAL	ADJUSTMENT
TP301 F29·AB (Trigger)	PLAY	ALIGNMENT TAPE COLOR BAR	OSCILLOSCOPE	-------	VR301 <R/P (AT) CH2 LEV> VR303 <R/P (AT) CH1 LEV>

1. SCOPE CH1 : TP301
   SCOPE CH2 : F29·AB EDGE CONNECTOR (on W3) For Trigger
2. Adjust VR301 and VR303 so that the signal level at TP301 is 400 ± 20mVp-p.

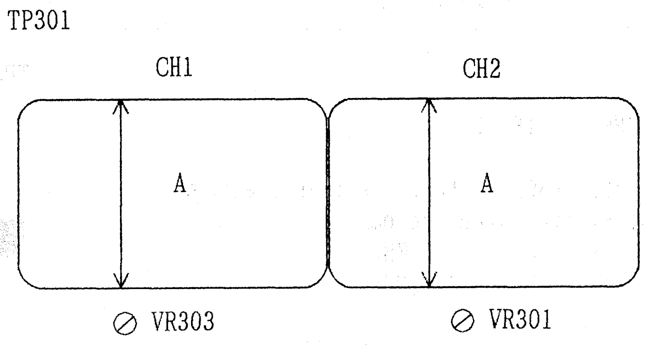

A = 400 ± 20mVp-p

7-2. C PLAYBACK FM CARRIER LEVEL ADJUSTMENT (FOR AU-65/AU-63/AU-62 NTSC & PAL)

(W3: MOD & DEMOD)

TEST POINT	MODE	TAPE USED	M.EQ.	INPUT SIGNAL	ADJUSTMENT
TP701 F33·AB (Trigger)	PLAY	ALIGNMENT TAPE COLOR BAR	OSCILLOSCOPE	-------	VR701 (R/P CH2 LEV) VR702 (R/P CH1 LEV)

1. SCOPE CH1 : TP701
   SCOPE CH2 : F33·AB EDGE CONNECTOR (on W3) For Trigger
2. Adjust VR701 and VR702 so that the signal level at TP701 is 400 ± 20mVp-p.

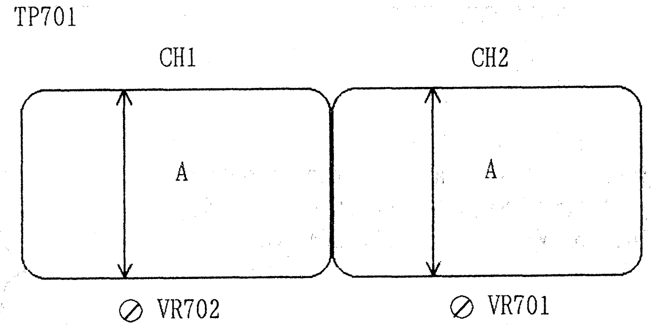

A = 400 ± 20mVp-p

7-3. Y GROUP DELAY EQ CONFIRMATION OR ADJUSTMENT
(FOR AU-65/AU-63/AU-62 NTSC & PAL)

(W3: MOD & DEMOD)

TEST POINT	MODE	TAPE USED	M.EQ.	INPUT SIGNAL	ADJUSTMENT
TP302	PLAY	ALIGNMENT TAPE RF SWEEP	OSCILLOSCOPE	-------	VL301 (Y G-D, EQ)

Step 1. MACHINE CONDITION	TJ301 (on W3) : OPEN CONTACT

Step 2.

1. SCOPE : TP302
2. Adjust VL301 so that the trap frequency (A) of line sweep becomes
   NTSC 8.0 ± 0.1MHz
   PAL 7.7 ± 0.1MHz
3. TJ301 (on W3) : CLOSE CONTACT

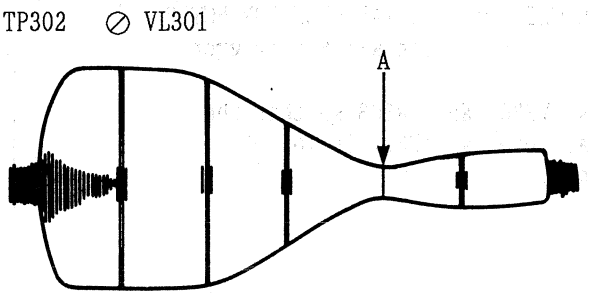

NTSC A = 8.0 ± 0.1MHz
PAL A = 7.7 ± 0.1MHz

7-4. C GROUP DELAY EQ CONFIRMATION OR ADJUSTMENT
(FOR AU-65/AU-63/AU-62 NTSC & PAL)

(W3: MOD & DEMOD)

TEST POINT	MODE	TAPE USED	M.EQ.	INPUT SIGNAL	ADJUSTMENT
TP702	PLAY	ALIGNMENT TAPE RF SWEEP	OSCILLOSCOPE	-------	VL701 (C G, D, EQ)

Step 1. MACHINE CONDITION	TJ701 (on W3) : OPEN CONTACT

Step 2.

1. SCOPE : TP702
2. Adjust VL701 so that the trap frequency (A) of line sweep becomes 6.0 ± 0.1MHz.
3. TJ701 (on W3) : CLOSE CONTACT

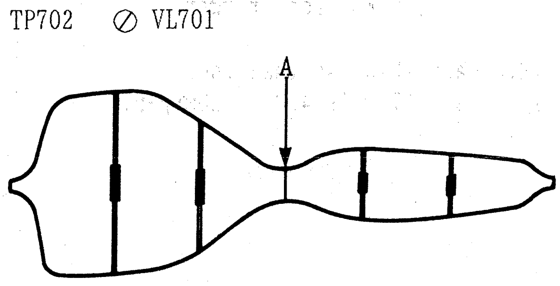

A = 6.0 ± 0.1MHz

7-5. Y TERM PRESET POSITION OR ADJUSTMENT (FOR AU-65/AU-63/AU-62 NTSC & PAL)

(W3: MOD & DEMOD)

Note : Before performing this adjustment STEP, you need to "PRE-SET" the following pots : VR309, VR311, VR310.

Step 1. 1. Preset VR309 (TERM) to the 3 o'clock position.	⊘ VR309 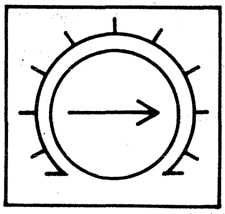

7-6. Y EQ 3 ADJUSTMENT (FOR AU-65/AU-63/AU-62 NTSC & PAL)

(W3: MOD & DEMOD)

Step 1. 1. Preset VR311 (EQ3) to the 10 o'clock position.	⊘ VR311 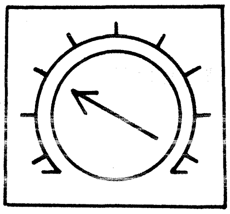

7-7. Y EQ 4 ADJUSTMENT (FOR AU-65/AU-63/AU-62 NTSC & PAL)

(W3: MOD & DEMOD)

Step 1. 1. Turn VR310 fully clockwise.	⊘ VR310 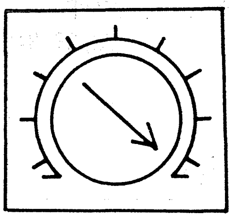

7-8. Y AUTO EQ DT VR PRESET (FOR AU-65/AU-63/AU-62 PAL)

(W3: MOD & DEMOD)

Step 1. Note: This adjustment is PAL model only. 1. Preset VR 328 (A EQ DT V) to the center position.	⊘ VR328 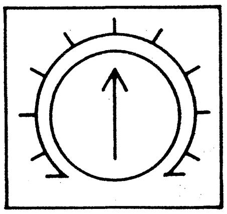

7-9. C PLAYBACK FM B.P.F. FREQUENCY RESPONSE ADJUSTMENT (FOR AU-65/AU-63/AU-62 NTSC & PAL)

(W3: MOD & DEMOD)

TEST POINT	MODE	TAPE USED	M.EQ.	INPUT SIGNAL	ADJUSTMENT
TP703	PLAY	ALIGNMENT TAPE RF SWEEP	OSCILLOSCOPE	-------	VL702 (C BPF F.R.)

Step 1. MACHINE CONDITION	SW704 (on W3) : OFF TJ702 (on W3) : OPEN CONTACT
Step 2. 1. SCOPE : TP703 2. Adjust VL702 so that the trap frequency (A) of line sweep becomes NTSC 6.3 ± 0.1MHz PAL 8.0 ± 0.1MHz	TP703 ⊘ VL702 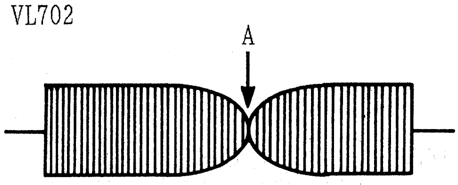 NTSC A = 6.3 ± 0.1MHz PAL A = 8.0 ± 0.1MHz
Step 3. RESET MACHINE CONDITION	SW704 (on W3) [NTSC] : OFF [PAL] : ON TJ702 (on W3) CLOSE CONTACT

7-10. Y DROP OUT DETECT BALANCE ADJUSTMENT (FOR AU-65/AU-63/AU-62 NTSC & PAL)

(W3: MOD & DEMOD)

TEST POINT	MODE	TAPE USED	M.EQ.	INPUT SIGNAL	ADJUSTMENT
TP307 F29·AB (Trigger) TP308	PLAY	ALIGNMENT TAPE COLOR BAR	OSCILLOSCOPE	-------	VR317 (LIM IN RF LEV.) VR321 (Y DO BAL)

Step 1. MACHINE CONDITION	SW304 (on W3) : OFF
Step 2. 1. SCOPE CH1 : TP307 SCOPE CH2 : F29·AB TERMINAL (Trigger) 2. Turn VL317 fully clockwise until the RF level becomes 0 (zero).	TP307 ⊘ VR317 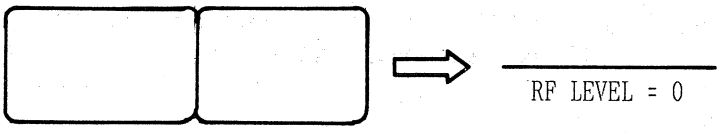
Step 3. 1. SCOPE : TP308 2. SCOPE MODE : DC MODE 3. Adjust VR321 for minimum DC Level.	

Step 4. 1. SCOPE CH1 : TP307 SCOPE CH2 : F29·AB TERMINAL (Trigger) 2. Adjust VR317 so that the RF level becomes 300mVp-p.	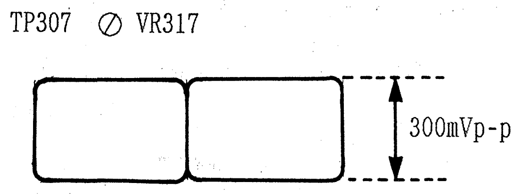
Step 5. 1. SW304 : ON (SUPER LIMITER ON)	

7-11. C DROP OUT DETECT BALANCE ADJUSTMENT (FOR AU-65/AU-63/AU-62 NTSC & PAL)

(W3: MOD & DEMOD)

TEST POINT	MODE	TAPE USED	M.EQ.	INPUT SIGNAL	ADJUSTMENT
TP703 TP704	PLAY	ALIGNMENT TAPE COLOR BAR	OSCILLOSCOPE	-------	VR714 (LIM IN RF LEV.) VR718 (Y DO BAL)

Step 1. MACHINE CONDITION	SW704 (on W3) : OFF
Step 2. 1. SCOPE CH1 : TP703 SCOPE CH2 : F33·AB TERMINAL (Trigger) 2. Turn VR714 fully clockwise until the RF level becomes 0 (zero).	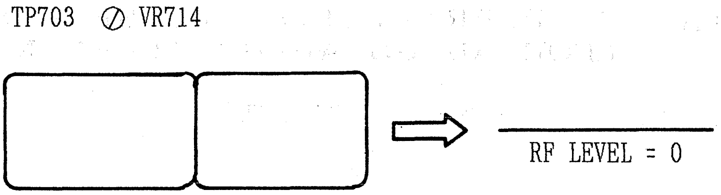
Step 3. 1. SCOPE : TP704 2. SCOPE MODE : DC MODE 3. Adjust VR718 for minimum DC Level.	
Step 4. 1. SCOPE CH1 : TP703 SCOPE CH2 : F33·AB TERMINAL (Trigger) 2. Adjust VR714 so that the RF level becomes 300mVp-p.	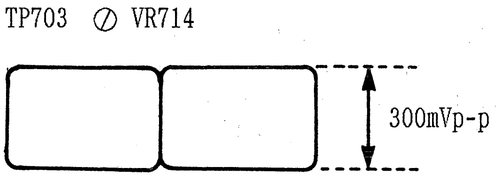
Step 5. 1. SW704 : OFF	At this time, SW704 isn't used, leave it in the OFF position.

7-12. Y SUPER LIMITER PULSE POSITION ADJUSTMENT
(FOR AU-65/AU-63/AU-62 NTSC & PAL)

(W3: MOD & DEMOD)

TEST POINT	MODE	TAPE USED	M.EQ.	INPUT SIGNAL	ADJUSTMENT
TP307	PLAY	ALIGNMENT TAPE COLOR BAR	OSCILLOSCOPE	---------	VC301 (Y P. POS)

Step 1.

1. Play back the color bar portion of the Alignment Tape.
2. SCOPE : TP307
3. SCOPE SETTING : without 20MHz Filter
4. SW304 : ON (Super Limiter function)
5. Adjust VC301 so that the spike pulse is located on the RF peak position as shown in figure.

TP307 ⊘ VC301

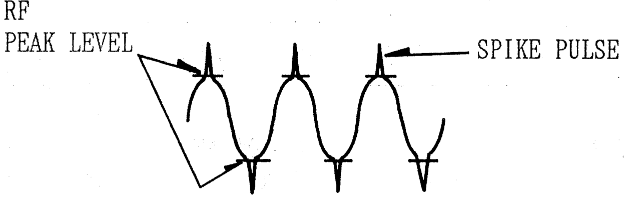

SCOPE TIME/DIV : 5 nsec (Max.)

7-13. C SUPER LIMITER PULSE POSITION ADJUSTMENT
(FOR AU-65/AU-63/AU-62 NTSC & PAL)

(W3: MOD & DEMOD)

TEST POINT	MODE	TAPE USED	M.EQ.	INPUT SIGNAL	ADJUSTMENT
TP703	PLAY	ALIGNMENT TAPE COLOR BAR	OSCILLOSCOPE	---------	VC701 (C P. POS)

Step 1.

1. Play back the color bar portion of the Alignment Tape.
2. SCOPE : TP703
3. SCOPE SETTING : without 20MHz Filter
4. SW704 : ON (Super Limiter function)
5. Adjust VC701 so that the spike pulse is located on the RF peak position as shown in figure.

Note [NTSC]:
The chroma super limiter function is not used at this time in NTSC model.

TP703 ⊘ VC701

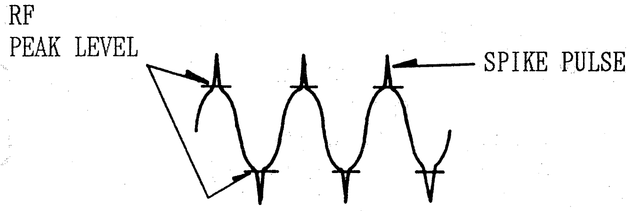

SCOPE TIME/DIV : 5 nsec (Max.)

7-14-N. Y NON-LINEAR DE-EMPHASIS LEVEL ADJUSTMENT (FOR AU-65/AU-63/AU-62 NTSC)

(W3: MOD & DEMOD)

TEST POINT	MODE	TAPE USED	M.EQ.	INPUT SIGNAL	ADJUSTMENT
TP309	PLAY	ALIGNMENT TAPE COLOR BAR	OSCILLOSCOPE	-------	VR322 (NL LEV)

TP309 ⊘ VR322

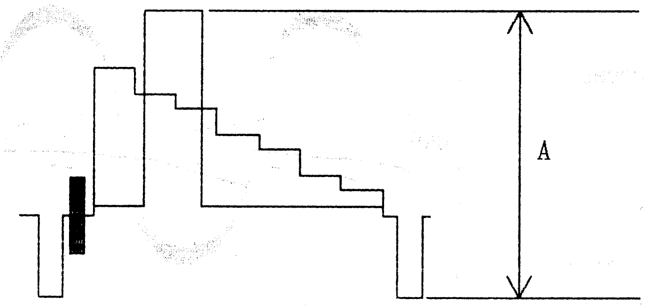

A = 2.5 ± 0.03Vp-p

7-14-P. Y NON-LINEAR DE-EMPHASIS LEVEL ADJUSTMENT (FOR AU-65/AU-63/AU-62 PAL)

(W3: MOD & DEMOD)

TEST POINT	MODE	TAPE USED	M.EQ.	INPUT SIGNAL	ADJUSTMENT
TP309	PLAY	ALIGNMENT TAPE COLOR BAR	OSCILLOSCOPE	-------	VR322 (NL LEV)

TP309 ⊘ VR322

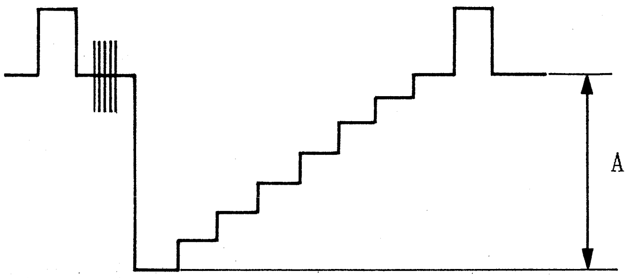

A = 1.1 ± 0.02Vp-p

7-15. Y NL DE-EMPHASIS LIMITER LEVEL ADJUSTMENT (FOR AU-62/63 NTSC & PAL)

(W3: MOD & DEMOD)

TEST POINT	MODE	TAPE USED	M.EQ.	INPUT SIGNAL	ADJUSTMENT
TP310	PLAY	ALIGNMENT TAPE 100% BOW TIE	OSCILLOSCOPE	-------	VR323 (NL LIM BAL) VR324 (NL LIM LEV)

1. Playback 100% BOW TIE signal and expand it.

2. Adjust VR324 so that V1 becomes
   NTSC : 340 ± 5mVp-p
   PAL : 360 ± 5mVp-p

3. SCOPE SETTING : DC Mode

4. Adjust VR323 so that the level V2 equals the level V3 (50 : 50%).

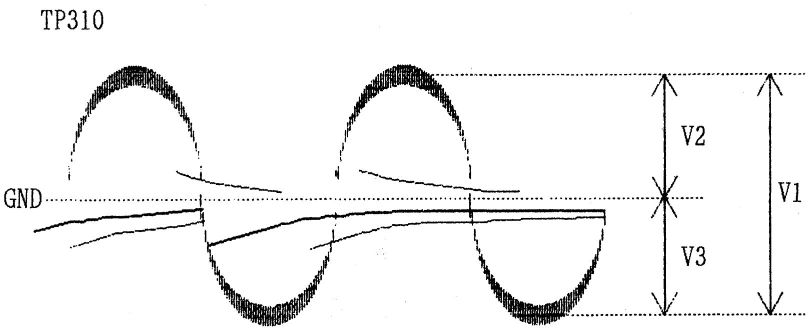

⊘ VR324 : (NTSC) V1 = 340 ± 5mVp-p
(PAL) V1 = 360 ± 5mVp-p
⊘ VR323 : V2 = V3

7-16-N. C NON-LINEAR DE-EMPHASIS LEVEL ADJUSTMENT (FOR AU-65/AU-63/AU-62 NTSC)

(W3: MOD & DEMOD)

TEST POINT	MODE	TAPE USED	M.EQ.	INPUT SIGNAL	ADJUSTMENT
TP706	PLAY	ALIGNMENT TAPE COLOR BAR	OSCILLOSCOPE	-------	VR719 (NL LEV)

1. Adjust VR719 so that the Pr signal level at TP706 is 1.68 ± 0.02Vp-p.

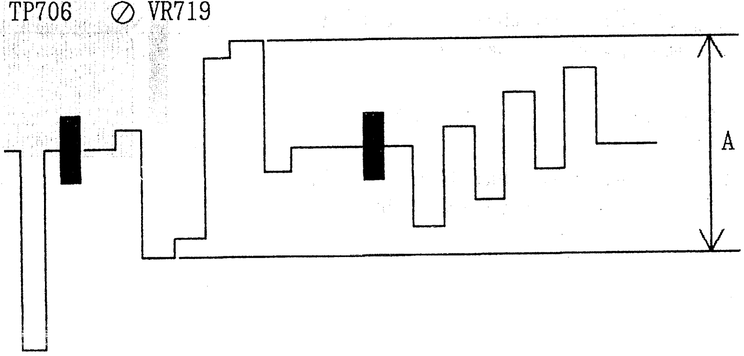

A = 1.68 ± 0.02Vp-p

7-16-P. C NON-LINEAR DE-EMPHASIS LEVEL ADJUSTMENT (FOR AU-65/AU-63/AU-62 PAL)

(W3: MOD & DEMOD)

TEST POINT	MODE	TAPE USED	M.EQ.	INPUT SIGNAL	ADJUSTMENT
TP706	PLAY	ALIGNMENT TAPE COLOR BAR	OSCILLOSCOPE	-------	VR719 (NL LEV)

1. Adjust VR719 so that the Pr signal level at TP706 is 1.1 ± 0.02Vp-p.

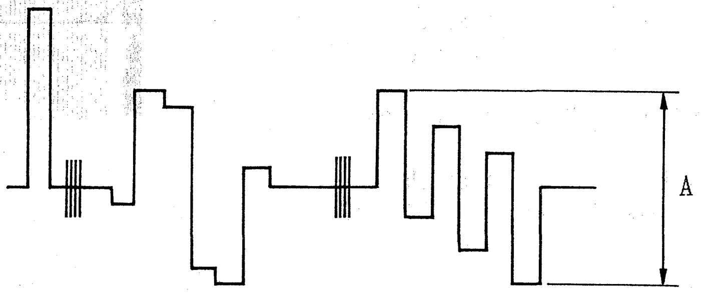

A = 1.1 ± 0.02Vp-p

7-17-N. C NL DE-EMPHASIS LIMITER LEVEL ADJUSTMENT (FOR AU-62/AU-63 NTSC)

(W3 MOD & DEMOD)

TEST POINT	MODE	TAPE USED	M.EQ.	INPUT SIGNAL	ADJUSTMENT
TP707	PLAY	ALIGNMENT TAPE 100% BOW TIE	OSCILLOSCOPE	-------	VR720 (LIM BAL) VR721 (NL LIM LEV)

1. Play back the 100% BOW TIE portion and expand Pb portion.
2. Adjust VR721 so that the level V1 becomes 340mV ± 5mVp-p.
3. SCOPE SETTING : DC mode.
4. Adjust VR720 so that the level V2 equals the level V3 (50 : 50%).

TP707 ⊘ VR720, VR721

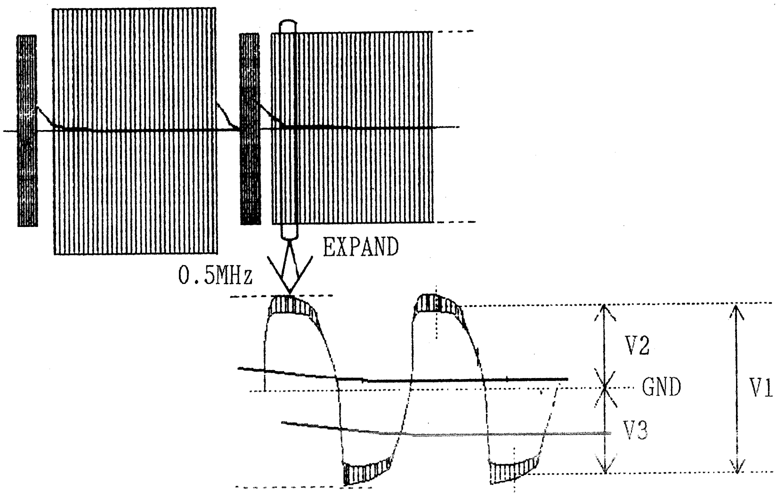

⊘ VR721 : V1 = 340 ± 5mVp-p
⊘ VR720 : V2 = V3

7-17-P. C NL DE-EMPHASIS LIMITER LEVEL ADJUSTMENT (FOR AU-62/AU-63 PAL)

(W3 MOD & DEMOD)

TEST POINT	MODE	TAPE USED	M.EQ.	INPUT SIGNAL	ADJUSTMENT
TP707	PLAY	ALIGNMENT TAPE 100% BOW TIE	OSCILLOSCOPE	-------	VR720 (LIM BAL) VR721 (NL LIM LEV)

1. Play back the 100% BOW TIE portion and expand Pb portion.
2. Adjust VR721 so that the level V1 becomes 400mV ± 5mVp-p.
3. SCOPE SETTING : DC mode.
4. Adjust VR720 so that the level V2 equals the level V3 (50 : 50%).

TP707 ⊘ VR720, VR721

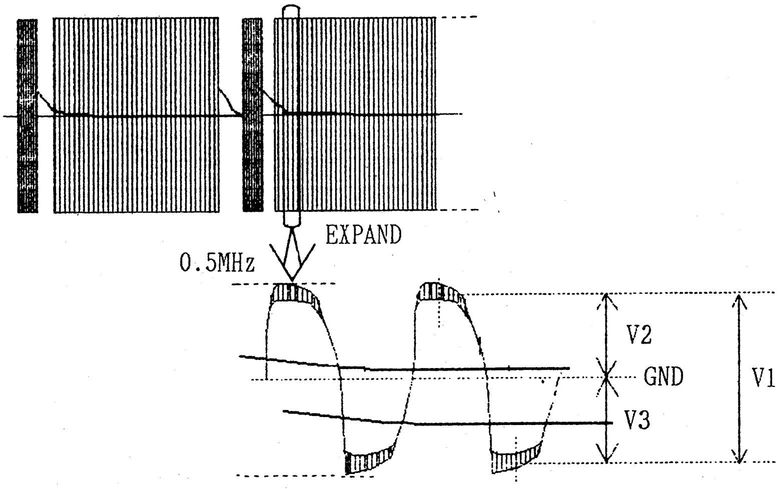

⊘ VR721 : V1 = 400 ± 5mVp-p
⊘ VR720 : V2 = V3

7-18-N. Y DE-MODULATOR BALANCE ADJUSTMENT
(FOR AU-65/63/62 NTSC)

(W3 MOD & DEMOD)

TEST POINT	MODE	TAPE USED	M.EQ.	INPUT SIGNAL	ADJUSTMENT
COMPONENT Y OUT F28·AB TERMINAL (Trigger)	PLAY	ALIGNMENT TAPE SWEEP	WAVE FORM MONITOR (TEK 1750)	----------	VR318 (LIM BAL) VR319 (DEMOD BAL)

<FOR AU-63/62>
1. SCOPE CH1 : COMPONENT Y OUT
   SCOPE CH2 : F28·AB TERMINAL (Trigger)
2. Adjust VR318 and VR319 so that the moire is minimized at lower part of 3 ~ 4 MHz.

<FOR AU-65>
1. Supply a Component 60% H. SWEEP signal to Component Input.
2. MODE : E-E
3. SCOPE CH1 : COMPONENT Y OUT
   SCOPE CH2 : F28·AB (Trigger)
4. Adjust VR318 and VR319 so that the moire is minimized at lower part of 3 ~ 4MHz.

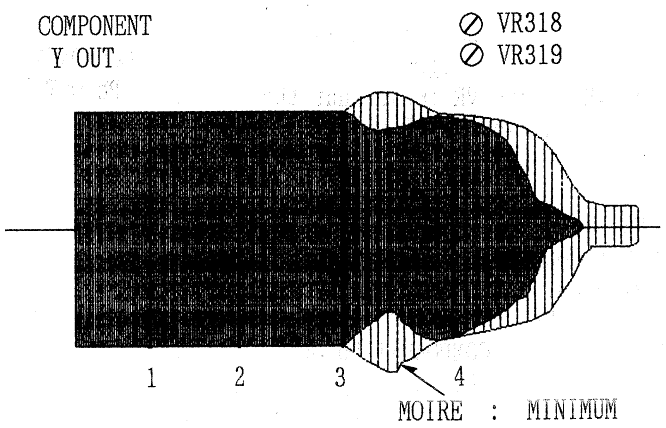

7-18-P. Y DE-MODULATOR BALANCE ADJUSTMENT
(FOR AU-65/63/62 PAL)

(W3 MOD & DEMOD)

TEST POINT	MODE	TAPE USED	M.EQ.	INPUT SIGNAL	ADJUSTMENT
COMPONENT Y OUT F28·AB TERMINAL (Trigger)	PLAY	ALIGNMENT TAPE SWEEP	WAVE FORM MONITOR (TEK 1750)	----------	VR318 (LIM BAL) VR319 (DEMOD BAL)

<FOR AU-63/62>
1. SCOPE CH1 : COMPONENT Y OUT
   SCOPE CH2 : F28·AB TERMINAL (Trigger)
2. Adjust VR318 and VR319 so that the moire is minimized at lower part of 3 ~ 4 MHz.

<FOR AU-65>
1. Supply a Component 60% H. SWEEP signal to Component Input.
2. MODE : E-E
3. SCOPE CH1 : COMPONENT Y OUT
   SCOPE CH2 : F28·AB (Trigger)
4. Adjust VR318 and VR319 so that the moire is minimized at lower part of 3 ~ 4MHz.

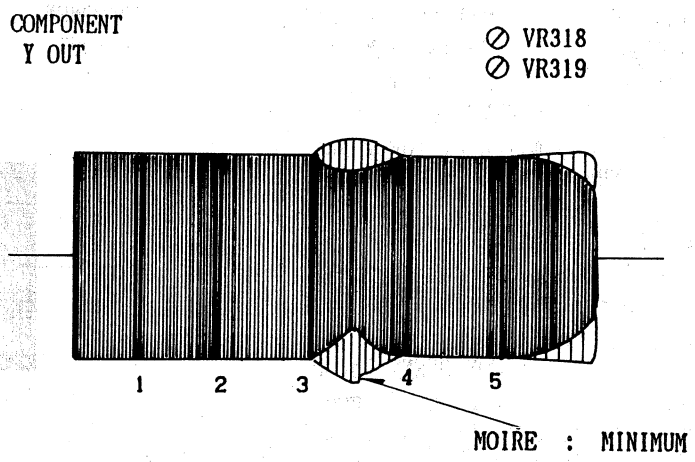

7-19-N. C DE-MODULATOR BALANCE ADJUSTMENT (FOR AU-65/63/62 NTSC)

(W3 MOD & DEMOD)

TEST POINT	MODE	TAPE USED	M.EQ.	INPUT SIGNAL	ADJUSTMENT
COMPONENT Pb OUT F33·AB TERMINAL (Trigger)	PLAY	ALIGNMENT TAPE SWEEP	WAVE FORM MONITOR (TEK 1750)	----------	VR715 (LIM BAL) VR716 (DEMOD BAL)

<FOR AU-63/62>

1. SCOPE CH1 : COMPONENT Pb OUT
   SCOPE CH2 : F33·AB TERMINAL (Trigger)
2. Adjust VR715 and VR716 so that the moire is minimized at lower part of 1 ~ 1.5MHz.

<FOR AU-65>

1. Supply a Component 60% H. SWEEP signal to Component Input.
2. MODE : E-E
3. SCOPE CH1 : COMPONENT Pb OUT
   SCOPE CH2 : F33·AB (Trigger)
4. Adjust VR715 and VR716 so that the moire is minimized at lower part of 1 ~ 1.5MHz.

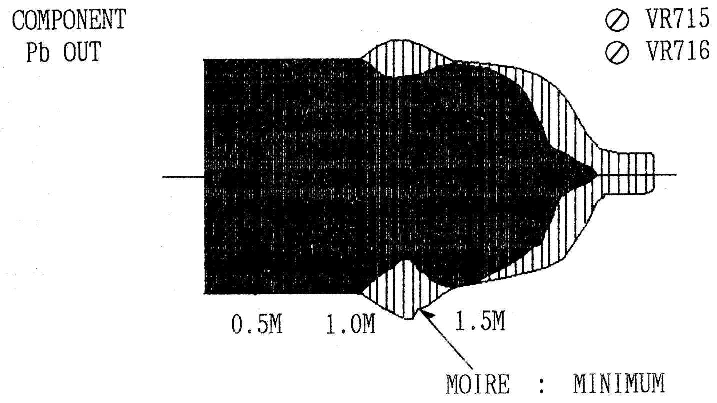

7-19-P. C DE-MODULATOR BALANCE ADJUSTMENT (FOR AU-65/63/62 PAL)

(W3 MOD & DEMOD)

TEST POINT	MODE	TAPE USED	M.EQ.	INPUT SIGNAL	ADJUSTMENT
COMPONENT Pb OUT F33·AB TERMINAL (Trigger)	PLAY	ALIGNMENT TAPE SWEEP	WAVE FORM MONITOR (TEK 1750)	----------	VR715 (LIM BAL) VR716 (DEMOD BAL)

<FOR AU-63/62>

1. SCOPE CH1 : COMPONENT Pb OUT
   SCOPE CH2 : F33·AB TERMINAL (Trigger)
2. Adjust VR715 and VR716 so that the moire is minimized at lower part of 1 ~ 1.5MHz.

<FOR AU-65>

1. Supply a Component 60% H. SWEEP signal to Component Input.
2. MODE : E-E
3. SCOPE CH1 : COMPONENT Pb OUT
   SCOPE CH2 : F33·AB (Trigger)
4. Adjust VR715 and VR716 so that the moire is minimized at lower part of 1 ~ 1.5MHz.

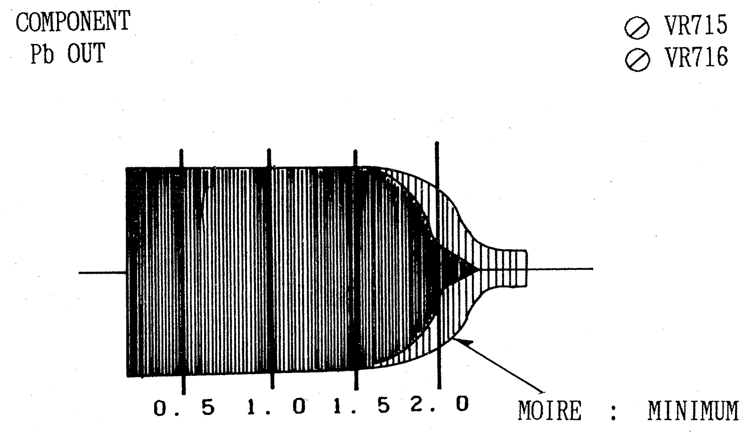

7-20. VIDEO CLIP ADJUSTMENT (FOR AU-65 NTSC & PAL)

(W3: MOD & DEMOD)

TEST POINT	MODE	TAPE USED	M.EQ.	INPUT SIGNAL	ADJUSTMENT
TP1	E-E (EJECT)	-------	WFM OR OSCILLOSCOPE	COMPONENT COLOR BAR LEVEL REFERENCE SIGNAL	VR3 (Y CLIP)

Step 1.

1. SCOPE : TP1
2. Adjust VR3 so that level B as shown in figure.

Note:
Measure from PEDESTAL LEVEL TO PEAK WHITE LEVEL.

TP1 ⊘ VR3

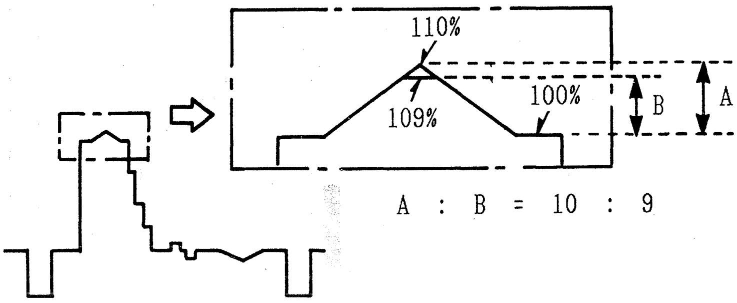

A : B = 10 : 9

7-21-N. Y NON-LINEAR PRE-EMPHASIS LEVEL ADJUSTMENT (FOR AU-65 NTSC)

(W3 MOD & DEMOD)

TEST POINT	MODE	TAPE USED	M.EQ.	INPUT SIGNAL	ADJUSTMENT
TP1	E-E (EJECT)	-------	OSCILLOSCOPE	COMPONENT 75% COLOR BAR	VR1 (Y NLE LEV)

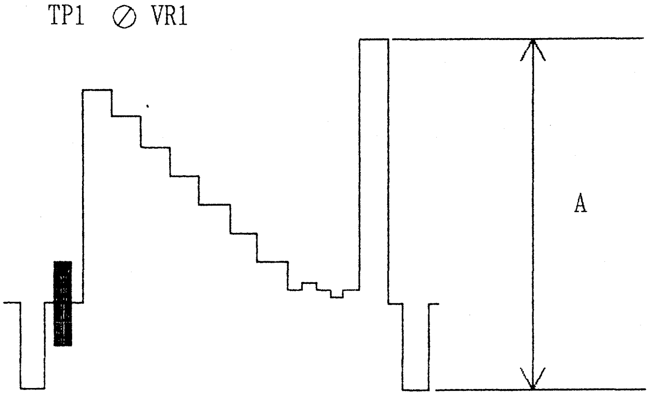

A = 2.45 ± 0.03Vp-p

7-21-P. Y NON-LINEAR PRE-EMPHASIS LEVEL ADJUSTMENT (FOR AU-65 PAL)

(W3 MOD & DEMOD)

TEST POINT	MODE	TAPE USED	M.EQ.	INPUT SIGNAL	ADJUSTMENT
TP 4	E-E (EJECT)	-------	OSCILLOSCOPE	COMPONENT COLOR BAR	VR1 (Y NLE LEV)

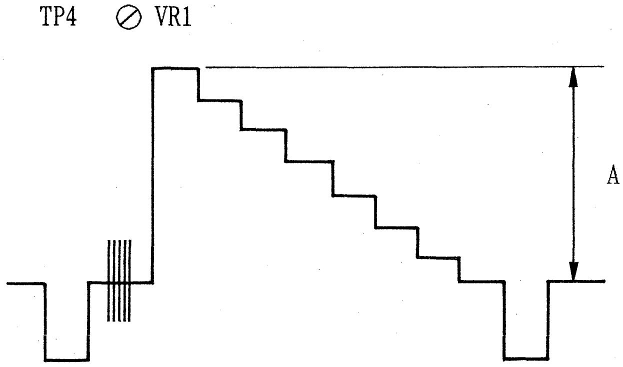

A = 1.1 ± 0.02Vp-p

7-22. VIDEO/SYNC METER ADJUSTMENT (FOR AU-65 NTSC & PAL)

(W3: MOD & DEMOD)

TEST POINT	MODE	TAPE USED	M.EQ.	INPUT SIGNAL	ADJUSTMENT
Video Level Meter (on Front Panel)	PLAY	COMPONENT 100% COLOR BAR	--------	--------	VR7 (V/S LEV.)

Step 1.

1. SW1 (on W3) : VIDEO POSITION
2. Adjust VR7 so that the meter indicates 100% as shown in figure.
3. SW1 (on W3) : SYNC POSITION
4. Confirm that the meter indicates 100 ± 10%.
5. SW1 (on W3) : VIDEO POSITION

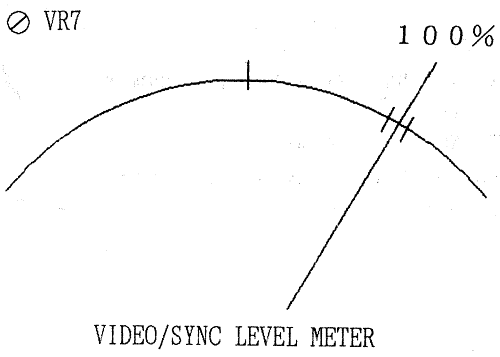

7-23-N. Y NL EMPHASIS LIMITER LEVEL ADJUSTMENT (FOR AU-65 NTSC)

(W3: MOD & DEMOD)

TEST POINT	MODE	TAPE USED	M.EQ.	INPUT SIGNAL	ADJUSTMENT
TP3	E-E (EJECT)	-------	OSCILLOSCOPE	COMPONENT 100% BOW TIE	VR5 (LIM BAL) VR4 (NL LIM LEV)

Step 1.

1. SCOPE : TP3
2. Adjust VR4 so that the level V1 becomes 340mV ± 5mVp-p.
3. SCOPE SETTING : DC mode
4. Adjust VR5 so that the level V2 equals the level V3 (50 - 50%).

TP3

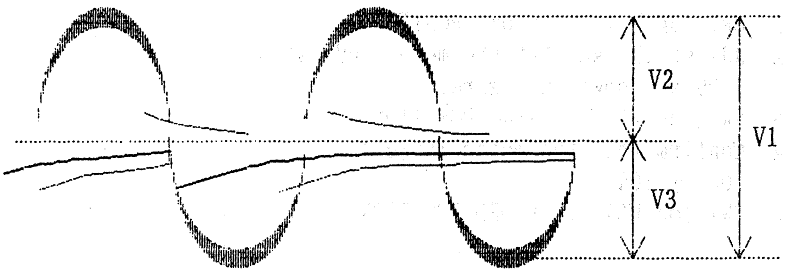

⊘ VR4 : V1 = 340mV ± 5mVp-p
⊘ VR5 : V2 = V3

7-23-P. Y NL EMPHASIS LIMITER LEVEL ADJUSTMENT (FOR AU-65 PAL)

(W3: MOD & DEMOD)

TEST POINT	MODE	TAPE USED	M.EQ.	INPUT SIGNAL	ADJUSTMENT
TP3	E-E (EJECT)	-------	OSCILLOSCOPE	COMPONENT 100% BOW TIE	VR5 (LIM BAL) VR4 (NL LIM LEV)

Step 1.

1. SCOPE : TP3
2. Adjust VR4 so that the level V1 becomes 360mV ± 5mVp-p.
3. SCOPE SETTING : DC mode
4. Adjust VR5 so that the level V2 equals the level V3 (50 - 50%).

TP3

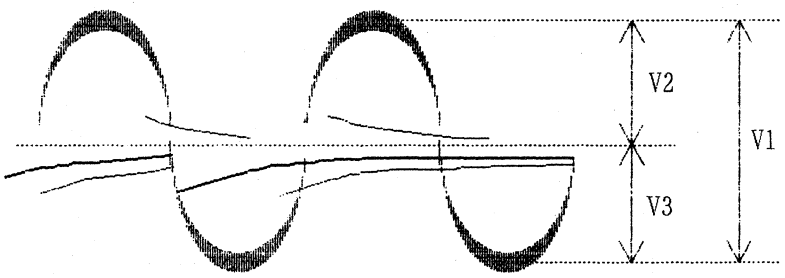

⊘ VR4 : V1 = 360mV ± 5mVp-p
⊘ VR5 : V2 = V3

7-24-N. C NON-LINEAR PRE-EMPHASIS LEVEL ADJUSTMENT (FOR AU-65 NTSC)

(W3 MOD & DEMOD)

TEST POINT	MODE	TAPE USED	M.EQ.	INPUT SIGNAL	ADJUSTMENT
TP201	E-E (EJECT)	-------	OSCILLOSCOPE	COMPONENT 75% COLOR BAR	VR201 (C NL LEV)

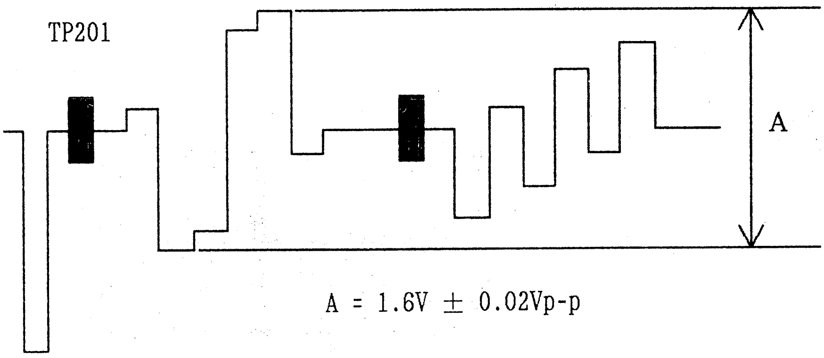

A = 1.6V ± 0.02Vp-p

7-24-P. C NON-LINEAR PRE-EMPHASIS LEVEL ADJUSTMENT (FOR AU-65 PAL)

(W3 MOD & DEMOD)

TEST POINT	MODE	TAPE USED	M.EQ.	INPUT SIGNAL	ADJUSTMENT
TP202	E-E (EJECT)	-------	OSCILLOSCOPE	COMPONENT 100% COLOR BAR	VR201 (C NL LEV)

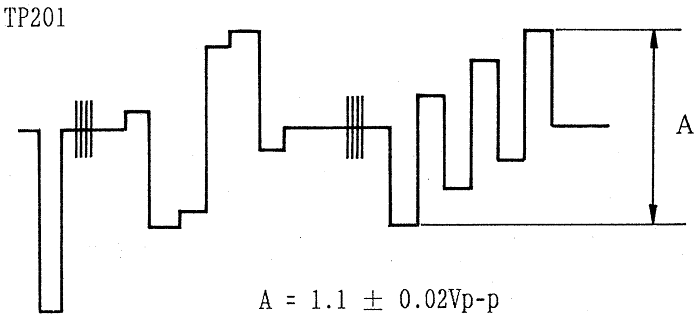

A = 1.1 ± 0.02Vp-p

7-25-N. C NON-LINEAR LIMITER ADJUSTMENT (FOR AU-65 NTSC)

(W3 MOD & DEMOD)

TEST POINT	MODE	TAPE USED	M.EQ.	INPUT SIGNAL	ADJUSTMENT
TP203	E-E (EJECT)	-------	OSCILLOSCOPE	COMPONENT 100% BOW TIE	VR202 (LIM BAL) VR203 (NL LIM LEV)

1. SCOPE : TP203
2. Observe the Pb signal of CTCM signal and expand the Time/Div of Pb signal.
3. Adjust VR203 so that the level V1 becomes 340mV ± 5mVp-p.
4. SCOPE SETTING : DC mode
5. Adjust VR202 so that the level V2 equals the level V3 (50 : 50%).

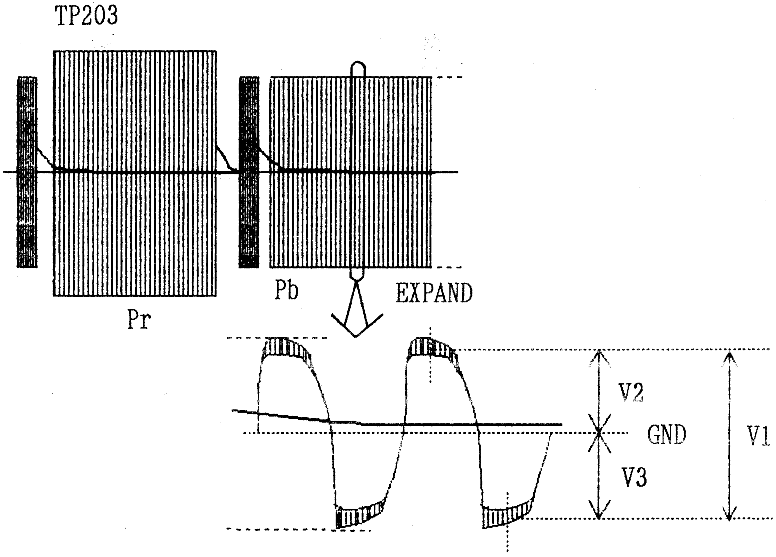

⊘ VR203 : V1 = 340mV ± 5mVp-p
⊘ VR202 : V2 = V3

7-25-P. C NON-LINEAR LIMITER ADJUSTMENT (FOR AU-65 PAL)

(W3 MOD & DEMOD)

TEST POINT	MODE	TAPE USED	M.EQ.	INPUT SIGNAL	ADJUSTMENT
TP203	E-E (EJECT)	-------	OSCILLOSCOPE	COMPONENT 100% BOW TIE	VR202 (LIM BAL) VR203 (NL LIM LEV)

1. SCOPE : TP203
2. Observe the CTCM signal and expand it.
3. Adjust VR203 so that the level V1 becomes 400mV ± 5mVp-p.
4. SCOPE SETTING : DC mode
5. Adjust VR202 so that the level V2 equals the level V3 (50 : 50%).

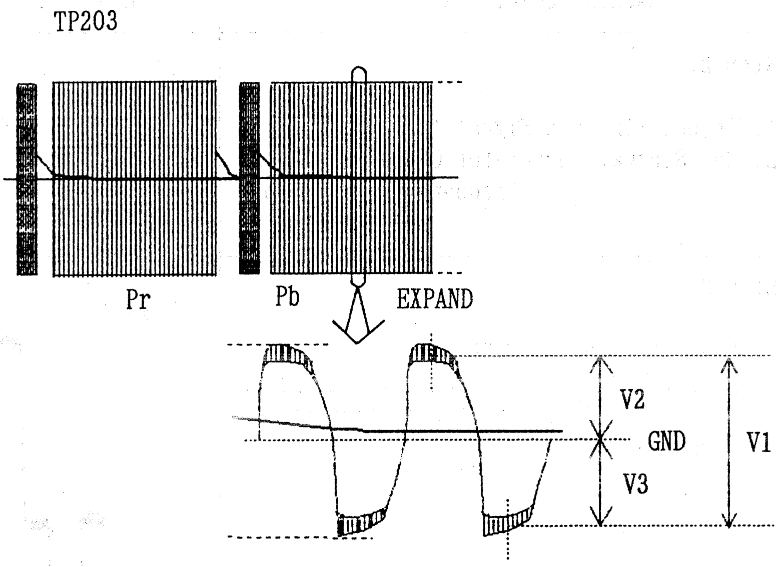

⊘ VR203 : V1 = 400mV ± 5mVp-p
⊘ VR202 : V2 = V3

7-26-N. Y FM DEVIATION ADJUSTMENT (FOR AU-65 NTSC)

(W3 MOD & DEMOD)

TEST POINT	MODE	TAPE USED	M.EQ.	INPUT SIGNAL	ADJUSTMENT
TP316 TP309	E-E (EJECT)	-------	OSCILLOSCOPE	COMPONENT 75% COLOR BAR	VR8 (DARK CLIP) VR10 (WHITE CLIP) VR6 (Y DEV.) VR9 (Y SYNC TIP FREQ.)

Step 1. MACHINE CONDITION	VR8 : Fully Counterclockwise (To release clip) VR10 : Fully Counterclockwise (To release clip)
Step 2. 1. Inject Sinewave Signal to TP316 2. Set Sinewave Generator Output Frequency Setting To :	5.6 MHz ± 0.01 MHz (0.2 ~ 0.4Vp-p)
Step 3. 1. Connect scope to TP309 2. Adjust VR9 so that frequency beat noise is nullified at sync tip portion as shown in figure 1.	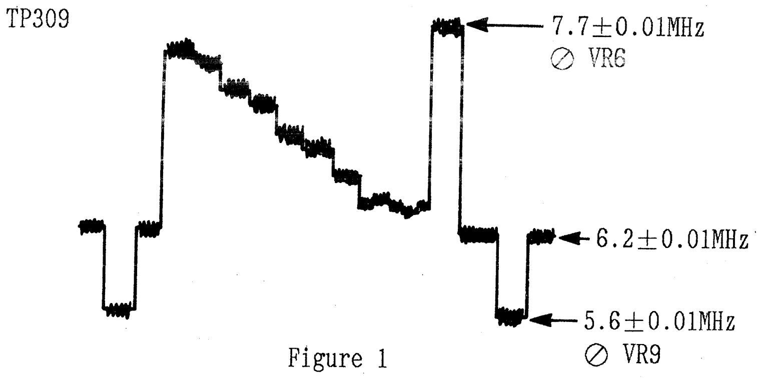 TP309 7.7±0.01MHz ⊘ VR6 6.2±0.01MHz 5.6±0.01MHz ⊘ VR9 Figure 1
Step 4. <SYNC TIP ADJ.> Change Sinewave Generator Output Frequency Setting To :	7.7 MHz ± 0.01 MHz (0.2 ~ 0.4Vp-p)
Step 5. 1. Adjust VR6 so that frequency beat noise is nullified at white peak portion as shown in figure 1.	
Step 6. 1. After this adjustment, the video Clip, White/Dark Clip and Y Modulator Balance Adjustments are required.	Go to SECTION 5-24

7-26-P. Y FM DEVIATION ADJUSTMENT
(FOR AU-65 PAL)

(W3 MOD & DEMOD)

TEST POINT	MODE	TAPE USED	M.EQ.	INPUT SIGNAL	ADJUSTMENT
TP316 TP309	E-E (EJECT)	-------	OSCILLOSCOPE	COMPONENT COLOR BAR	VR8 (DARK CLIP) VR10 (WHITE CLIP) VR6 (Y DEV.) VR9 (Y SYNC TIP FREQ.)

Step 1. MACHINE CONDITION	VR8 : Fully Counterclockwise (To release clip) VR10 : Fully Counterclockwise (To release clip)
Step 2. 1. Inject Sinewave Signal to TP316 2. Set Sinewave Generator Output Frequency Setting To :	6.63 MHz ± 0.01 MHz (0.2 ~ 0.4Vp-p)
Step 3. 1. Connect scope to TP309 2. Adjust VR9 so that frequency beat noise is nullified at sync tip portion as shown in figure 1.	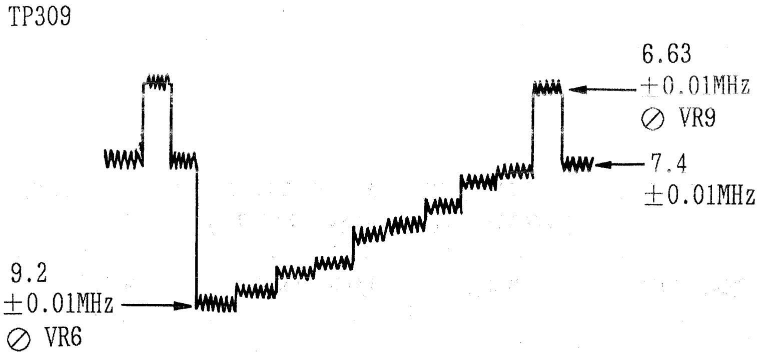 TP309 6.63 ±0.01MHz ⊘ VR9 7.4 ±0.01MHz 9.2 ±0.01MHz ⊘ VR6 Figure 1
Step 4. <SYNC TIP ADJ.> Change Sinewave Generator Output Frequency Setting To :	9.2 MHz ± 0.01 MHz (0.2 ~ 0.4Vp-p)
Step 5. 1. Adjust VR6 so that frequency beat noise is nullified at white peak portion as shown in figure 1.	
Step 6. 1. After this adjustment, the video Clip, White/Dark Clip and Y Modulator Balance Adjustments are required.	Go to SECTION 5-24

7-27-N. Y WHITE & DARK CLIP ADJUSTMENT (FOR AU-65 NTSC)

(W3 MOD & DEMOD)

TEST POINT	MODE	TAPE USED	M.EQ.	INPUT SIGNAL	ADJUSTMENT
TP 5	E-E (EJECT)	-------	OSCILLOSCOPE	COMPONENT Sin2 2T PULSE & BAR	VR10 (WHITE CLIP) VR 8 (DARK CLIP)

Step 1.

1. SCOPE : TP 5
2. Adjust VR10 so that the 2T Pulse (Positive spike) level (A) becomes 280% ± 5% as shown in figure.
3. Adjust VR8 so that the 2T Pulse (Negative spike) level (B) becomes 180% ± 5% as shown in figure.

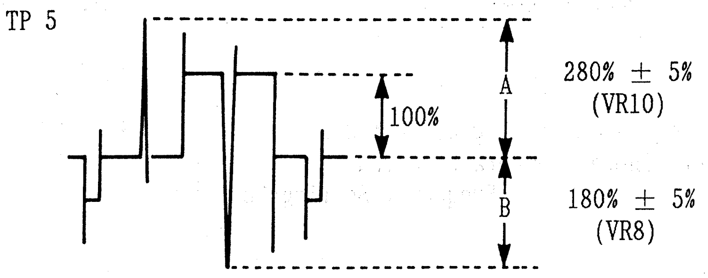

7-27-P. Y WHITE & DARK CLIP ADJUSTMENT (FOR AU-65 PAL)

(W3 MOD & DEMOD)

TEST POINT	MODE	TAPE USED	M.EQ.	INPUT SIGNAL	ADJUSTMENT
TP 5	E-E (EJECT)	-------	OSCILLOSCOPE	COMPONENT Sin2 2T PULSE & BAR	VR10 (WHITE CLIP) VR 8 (DARK CLIP)

Step 1.

1. SCOPE : TP 5
2. Adjust VR10 so that the 2T Pulse (Positive spike) level (A) becomes 260% ± 5% as shown in figure.
3. Adjust VR8 so that the 2T Pulse (Negative spike) level (B) becomes 170% ± 5% as shown in figure.

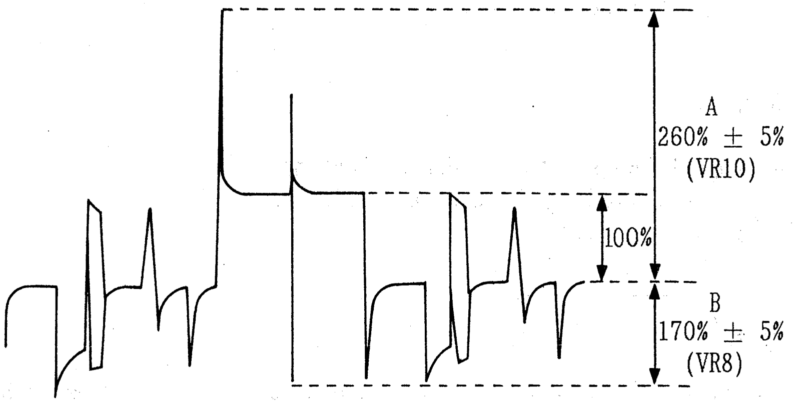

7-28-N(A). Y MODULATOR BALANCE ADJUSTMENT (BY USING SPECTRUM ANALYZER) (FOR AU-65 NTSC)

(W3 MOD & DEMOD)

TEST POINT	MODE	TAPE USED	M.EQ.	INPUT SIGNAL	ADJUSTMENT
TP7	E-E (EJECT)	-------	SPECTRUM ANALYZER	COMPONENT 50% WHITE	VR11 (Y MOD BAL)

1. Adjust VR11 so that the second harmonic (13.9 MHz) carrier level is minimized (Better than -38dB)

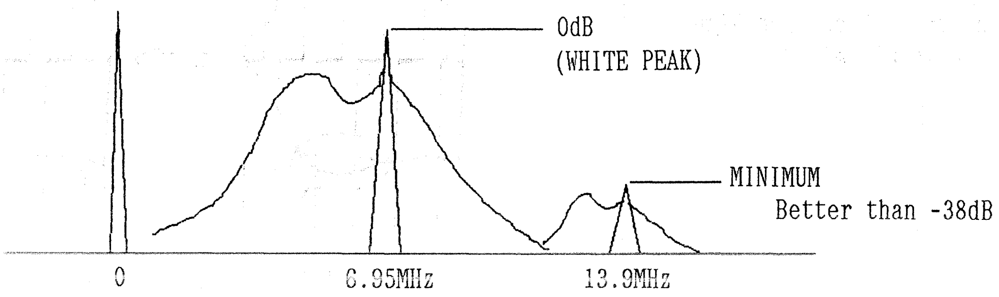

⌀ VR11 : 13.9MHz···MINIMUM

7-28-P(A). Y MODULATOR BALANCE ADJUSTMENT (BY USING SPECTRUM ANALYZER) (FOR AU-65 PAL)

(W3 MOD & DEMOD)

TEST POINT	MODE	TAPE USED	M.EQ.	INPUT SIGNAL	ADJUSTMENT
TP7	E-E (EJECT)	-------	SPECTRUM ANALYZER	COMPONENT 50% WHITE	VR11 (Y MOD BAL)

1. Adjust VR11 so that the second harmonic (16.6 MHz) carrier level is minimized (Better than -38dB)

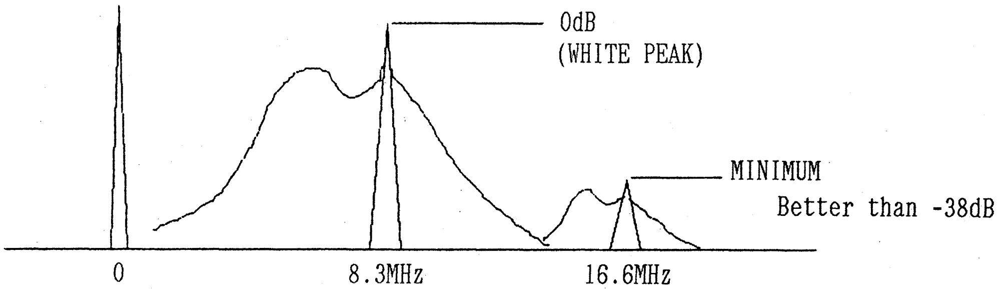

⌀ VR11 : 16.6MHz···MINIMUM

7-28(B). Y MODULATOR BALANCE ADJUSTMENT
(BY USING OSCILLOSCOPE)
(FOR AU-65 NTSC & PAL)

(W3 MOD & DEMOD)

TEST POINT	MODE	TAPE USED	M.EQ.	INPUT SIGNAL	ADJUSTMENT
COMPONENT Y OUT	E-E (EJECT)	-------	OSCILLOSCOPE	COMPONENT 60% H. SWEEP	VR11 (Y MOD BAL)

Step 1.

1. SCOPE : COMPONENT Y OUT

2. Adjust VR11 so the "A" portion High Frequency moire is minimized.

COMPONENT Y OUT

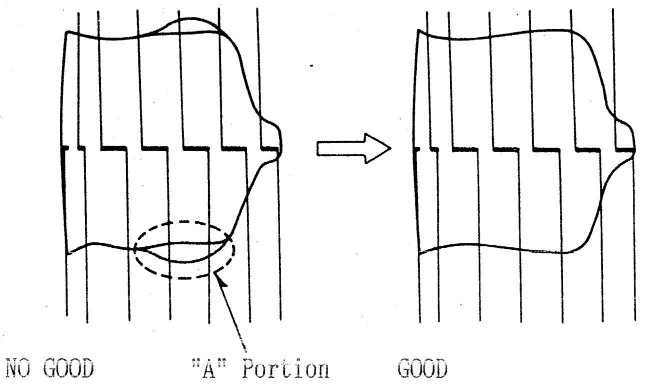

7-29-N. Y DEVIATION CONFIRMATION (FOR AU-65 NTSC)

(W3 MOD & DEMOD)

TEST POINT	MODE	TAPE USED	M.EQ.	INPUT SIGNAL	ADJUSTMENT
TP309	PLAY ↓ STOP	ALIGNMENT TAPE 75% COLOR BAR	OSCILLOSCOPE	COMPONENT 75% COLOR BAR	VR6 (Y DEV)

Step 1.

1. SCOPE : TP309
2. Play back the color bar portion of the Alignment Tape.
3. Measure the level A.
4. Place the unit in the E-E mode. (STOP)
5. Compare the level A of Alignment Tape Play back signal and the level B of E-E color bar.
6. If it is not same level *, adjust VR6 so that the E-E output level (B) becomes same level of Alignemtn Tape Play back color bar level (A).

*Note:
Make sure the Y WHITE & DARK CLIP are readjusted (7-27-N).

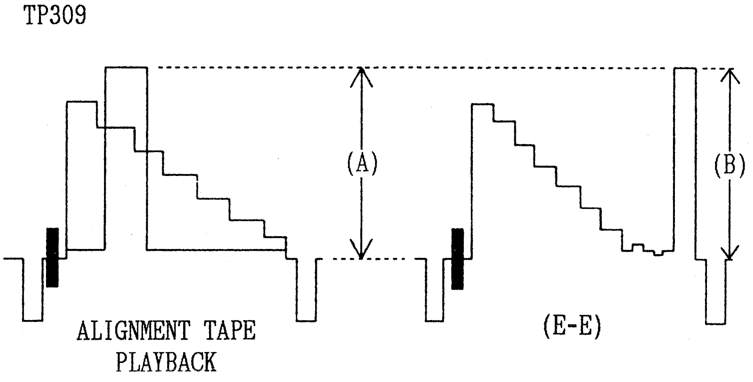

ALIGNMENT TAPE PLAYBACK SIGNAL LEVEL (A)
= E-E OUTPUT SIGNAL LEVEL (B)

7-29-P. Y DEVIATION CONFIRMATION (FOR AU-65 PAL)

(W3 MOD & DEMOD)

TEST POINT	MODE	TAPE USED	M.EQ.	INPUT SIGNAL	ADJUSTMENT
TP309	PLAY ↓ STOP	ALIGNMENT TAPE COLOR BAR	OSCILLOSCOPE	COMPONENT 100% COLOR BAR	VR6 (Y DEV)

Step 1.

1. SCOPE : TP309
2. Play back the color bar portion of the Alignment Tape.
3. Measure the level A.
4. Place the unit in the E-E mode. (STOP)
5. Compare the level of Alignment Tape Play back signal and the level of E-E color bar.
6. If it is not same level *, adjust VR6 so that the E-E output level becomes same level of Alignment Tape Play back color bar level.

*Note:
Make sure the Y WHITE & DARK CLIP are readjusted (7-27-P).

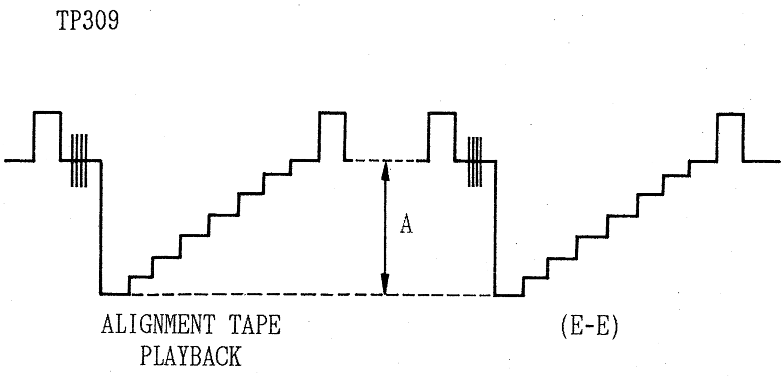

ALIGNMENT TAPE PLAYBACK SIGNAL LEVEL (A)
= E-E OUTPUT SIGNAL LEVEL (B)

7-30. C CLAMP PULSE POSITION ADJUSTMENT
(FOR AU-65 NTSC & PAL)

(W3 MOD & DEMOD)

TEST POINT	MODE	TAPE USED	M.EQ.	INPUT SIGNAL	ADJUSTMENT
TP201 TP204	E-E (EJECT)	-------	OSCILLOSCOPE	COMPONENT 75% (NTSC) 100% (PAL) COLOR BAR	VR205 (C CLAMP POS)

Step 1. MACHINE CONDITION	1. INPUT SELECT : COMPONENT (on Pull Out Drawer) 2. YC/COMPONENT SELECT : COMPONENT (on Front Sub Panel) 3. SW201 : NOT TEST POSITION

Step 2.

1. SCOPE CH1 : TP201
   SCOPE CH2 : TP204
2. Adjust VR205 so that the period (A) is 0.7 ± 0.1μsec.
3. Confirm that the pulse width (B) is 1.2 ± 0.2μsec.
   color bar level (A).

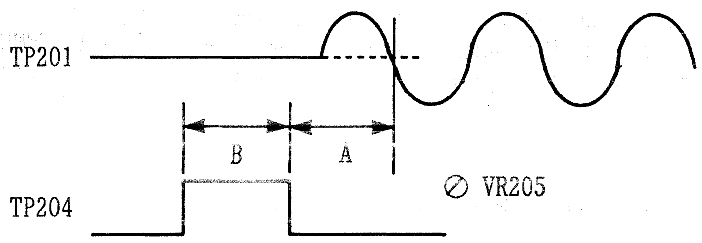

A = 0.7 ± 0.1μS (ADJ)
B = 1.2 ± 0.2μS (CONFIRMATION)

7-31-N. C FM DEVIATION ADJUSTMENT (FOR AU-65 NTSC)

(W3 MOD & DEMOD)

TEST POINT	MODE	TAPE USED	M.EQ.	INPUT SIGNAL	ADJUSTMENT
TP711 TP706	E-E (EJECT)	-------	OSCILLOSCOPE	Y/CTCM COLOR BAR	VR207 (DARK CLIP) VR208 (WHITE CLIP) VR204 (C DEV.) VR206 (C BLK FREQ)

Step 1. MACHINE CONDITION	VR207 : Fully Counterclockwise (To release clip) VR208 : Fully Counterclockwise (To release clip)
Step 2. 1. Sinewave Signal to TP711. 2. Set Sinewave Generator Out put Frequency Setting To :	5.5 MHz ± 0.01 MHz (0.2 ~ 0.4 Vp-p)
Step 3. 1. Connect scope to TP706 2. Adjust VR206 so that frequency beat noise is nullified at blanking portion as shown in figure.	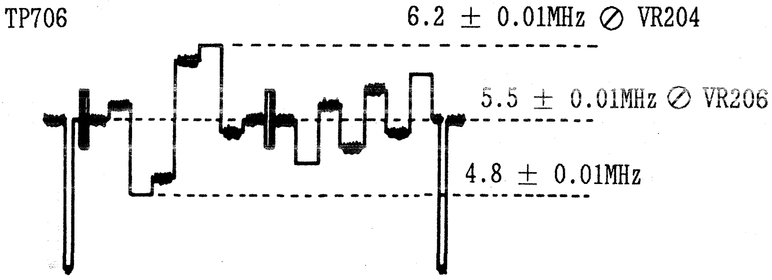 TP706 6.2 ± 0.01MHz ⊘ VR204 5.5 ± 0.01MHz ⊘ VR206 4.8 ± 0.01MHz
Step 4. Change Sinewave Generator Output Frequency Setting To :	6.2MHz ± 0.01MHz (0.2 ~ 0.4Vp-p)
Step 5. 1. Adjust VR204 so that frequency beat noise is nullified at red portion of Pr signal as shown in figure 1.	
Step 6. Then change the frequency of the sinewave generator to 4.8MHz (±0.01KHz) and confirm that the beat does not occur at cyan portion of Pr signal. If it is not, repeat from steps 5 and 6.	
Note: After this adjustment, the C WHITE/DARK CLIP adjustments are required.	Go to SECTION 5-29

7-31-P. C FM DEVIATION ADJUSTMENT (FOR AU-65 PAL)

(W3 MOD & DEMOD)

TEST POINT	MODE	TAPE USED	M.EQ.	INPUT SIGNAL	ADJUSTMENT
TP711 TP706	E-E (EJECT)	-------	OSCILLOSCOPE	Y/CTCM COLOR BAR	VR207 (DARK CLIP) VR208 (WHITE CLIP) VR204 (C DEV.) VR206 (C BLK FREQ)

Step 1. MACHINE CONDITION	VR207 : Fully Counterclockwise (To release clip) VR208 : Fully Counterclockwise (To release clip)
Step 2. 1. Sinewave Signal to TP711. 2. Set Sinewave Generator Out put Frequency Setting To :	6.2 MHz ± 0.01 MHz (0.2 ~ 0.4 Vp-p)
Step 3. 1. Connect scope to TP706 2. Adjust VR206 so that frequency beat noise is nullified at blanking portion as shown in figure.	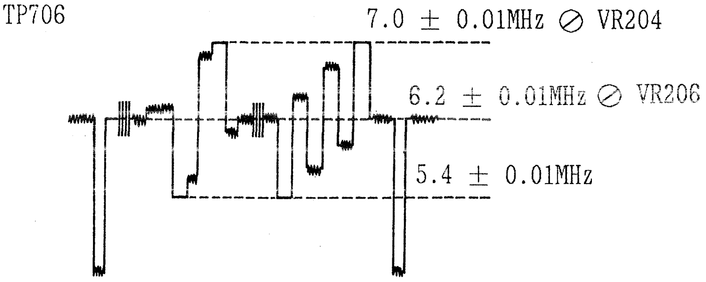 TP706 7.0 ± 0.01MHz ⊘ VR204 6.2 ± 0.01MHz ⊘ VR206 5.4 ± 0.01MHz
Step 4. Change Sinewave Generator Output Frequency Setting To :	7.0MHz ± 0.01MHz (0.2 ~ 0.4Vp-p)
Step 5. 1. Adjust VR204 so that frequency beat noise is nullified at red portion of Pr signal as shown in figure 1.	
Step 6. Then change the frequency of the sinewave generator to 4.8MHz (±0.01KHz) and confirm that the beat does not occur at cyan portion of Pr signal. If it is not, repeat from steps 5 and 6.	
Note: After this adjustment, the C WHITE/DARK CLIP adjustments are required.	Go to SECTION 5-29

7-32-N. C WHITE & DARK CLIP ADJUSTMENT (FOR AU-65 NTSC)

(W3 MOD & DEMOD)

TEST POINT	MODE	TAPE USED	M.EQ.	INPUT SIGNAL	ADJUSTMENT
TP205	E-E (EJECT)	-------	OSCILLOSCOPE	COMPONENT 75% COLOR BAR	VR208 (⊕ CLIP) VR207 (⊖ CLIP)

Step 1.

1. SCOPE : TP205
2. Adjust VR208 so that the A portion is 147.5% ± 5% as shown in figure.
3. Adjust VR207 so that the B portion is 180% ± 5% as shown in figure.

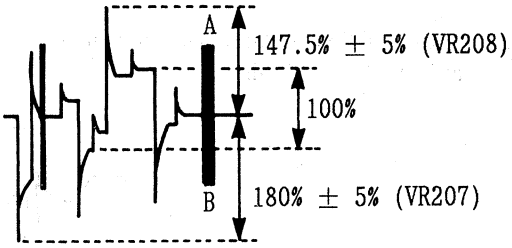

7-32-P. C WHITE & DARK CLIP ADJUSTMENT (FOR AU-65 PAL)

(W3 MOD & DEMOD)

TEST POINT	MODE	TAPE USED	M.EQ.	INPUT SIGNAL	ADJUSTMENT
TP205	E-E (EJECT)	-------	OSCILLOSCOPE	PULSE & BAR 3T 60% H SWEEP	VR208 (⊕ CLIP) VR207 (⊖ CLIP)

Step 1.

1. SCOPE : TP205
2. Adjust VR208 so that the A portion (top of sweep marker) 200 ± 5% as shown in figure .
3. Adjust VR207 so that the B portion is 200% ± 5% as shown in figure.

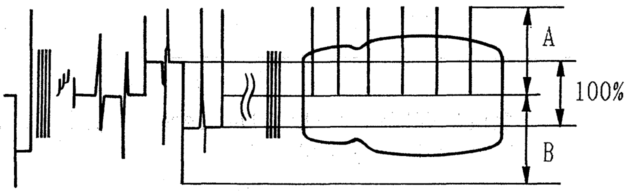

A = 200% ± 5% (VR208)
B = 200% ± 5% (VR207)

7-33-N(A). C MODULATOR BALANCE ADJUSTMENT
(BY USING SPECTRAM ANALYZER)
(FOR AU-65 NTSC)

(W3 MOD & DEMOD)

TEST POINT	MODE	TAPE USED	M.EQ.	INPUT SIGNAL	ADJUSTMENT
TP207	E-E (EJECT)	-------	SPECTRUM ANALYZER	COMPONENT 50% WHITE	VR209 (C MOD BAL)

1. Adjust VR209 so that the second harmonic (11.0 MHz) carrier level is minimized
   (Better than -40dB)

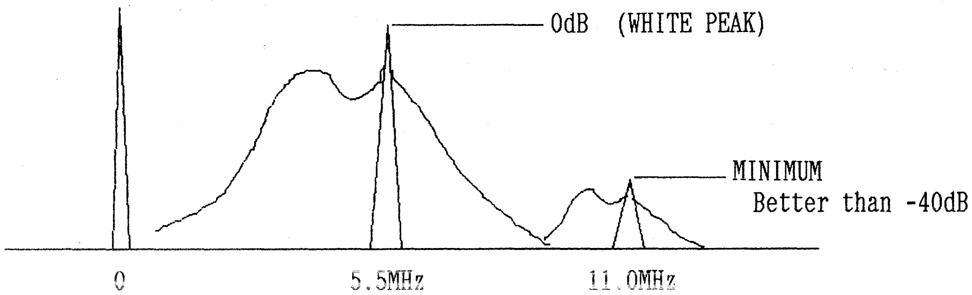

⊘ VR209 : 11.0MHz···MINIMUM

7-33-P(A). C MODULATOR BALANCE ADJUSTMENT
(BY USING SPECTRAM ANALYZER)
(FOR AU-65 PAL)

(W3 MOD & DEMOD)

TEST POINT	MODE	TAPE USED	M.EQ.	INPUT SIGNAL	ADJUSTMENT
TP207	E-E (EJECT)	-------	SPECTRUM ANALYZER	COMPONENT 50% WHITE	VR209 (C MOD BAL)

1. Adjust VR209 so that the second harmonic (12.4 MHz) carrier level is minimized
   (Better than -40dB)

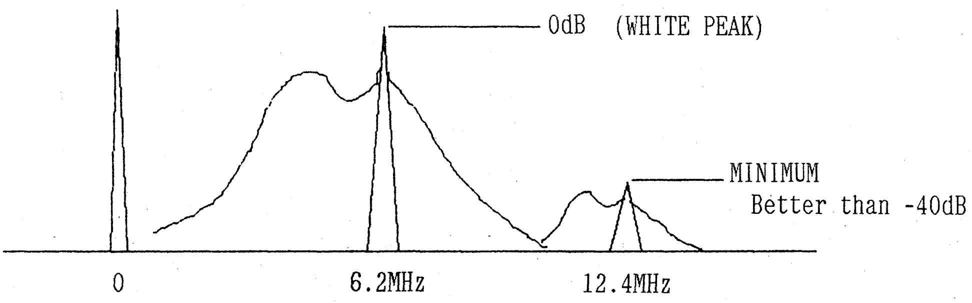

⊘ VR209 : 12.4MHz···MINIMUM

7-33(B). C MODULATOR BALANCE ADJUSTMENT
(BY USING OSCILLOSCOPE)
(FOR AU-65 NTSC & PAL)

(W3 MOD & DEMOD)

TEST POINT	MODE	TAPE USED	M.EQ.	INPUT SIGNAL	ADJUSTMENT
COMPONENT Pr/Pb OUT	E-E (EJECT)	-------	OSCILLOSCOPE	COMPONENT 60% H. SWEEP	VR209 (C MOD BAL)

Step 1.

1. SCOPE : COMPONENT Pr/Pb OUT
2. Adjust VR209 so the "A" portion High Frequency moire is minimized.

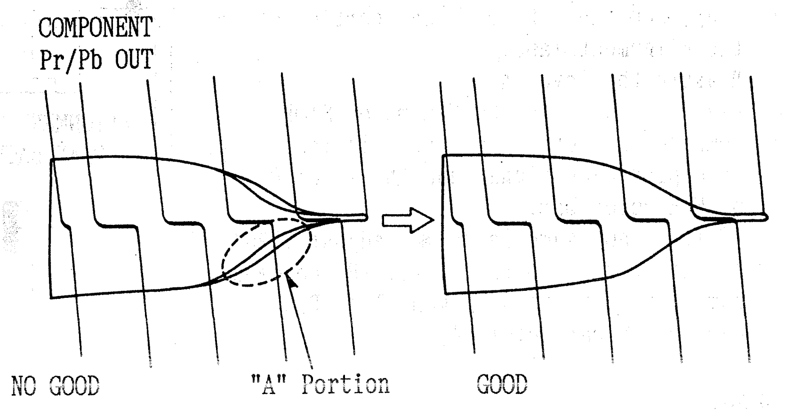
COMPONENT
Pr/Pb OUT
NO GOOD
"A" Portion
GOOD

7-34-N. C DEVIATION CONFIRMATION (FOR AU-65 NTSC)

(W3 MOD & DEMOD)

TEST POINT	MODE	TAPE USED	M.EQ.	INPUT SIGNAL	ADJUSTMENT
TP706	PLAY ↓ STOP	ALIGNMENT TAPE COLOR BAR	OSCILLOSCOPE	COMPONENT 75% COLOR BAR	VR204 (C DEV)

Step 1.

1. SCOPE : TP706
2. Play back the 75% color bar portion of the Alignment Tape.
3. Measure the level A.
4. Place the unit in the E-E mode (STOP).
5. Compare the level A of the Alignment Tape play back signal and the level B of E-E color bar.
6. If it is not same level *, adjust VR204 so that the E-E output level (B) becomes same level of the Alignment Tape Play back color bar level (A).

*Note:
Make sure the C WHITE & DARK CLIP are adjusted (7-32-N).

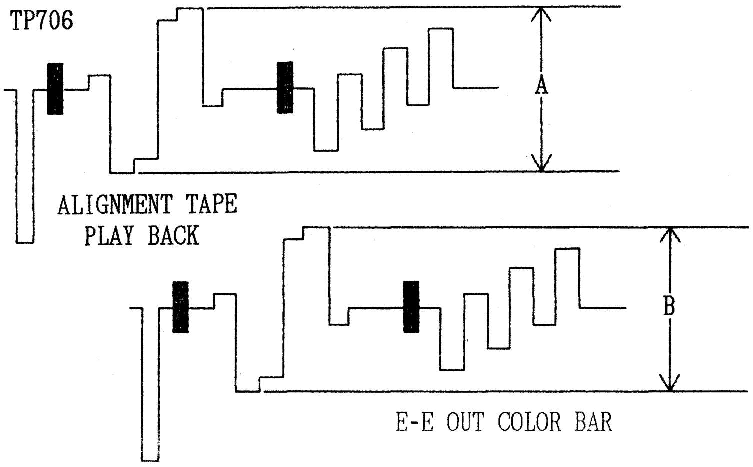

ALIGNMENT TAPE PLAYBACK SIGNAL LEVEL (A)
= E-E OUTPUT SIGNAL LEVEL (B)

7-34-P. C DEVIATION CONFIRMATION (FOR AU-65 PAL)

(W3 MOD & DEMOD)

TEST POINT	MODE	TAPE USED	M.EQ.	INPUT SIGNAL	ADJUSTMENT
TP706	PLAY ↓ STOP	ALIGNMENT TAPE COLOUR BAR	OSCILLOSCOPE	COMPONENT 100% COLOUR BAR	VR204 (C DEV)

Step 1.

1. SCOPE : TP706
2. Play back the 100% colour bar portion of the Alignment Tape.
3. Measure the level A.
4. Place the unit in the E-E mode (STOP).
5. Compare the level A of the Alignment Tape play back signal and the level B of E-E colour bar.
6. If it is not same level *, adjust VR204 so that the E-E output level (B) becomes same level of the Alignment Tape Play back colour bar level (A).

*Note:
Make sure the C WHITE & DARK CLIP are adjusted (7-32-P).

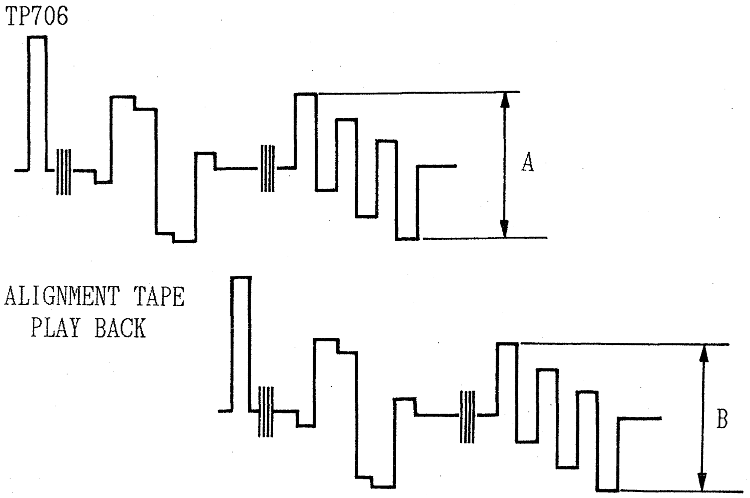

ALIGNMENT TAPE PLAYBACK SIGNAL LEVEL (A)
= E-E OUTPUT SIGNAL LEVEL (B)

7-35(A). C REC FM B.P.F. FREQUENCY RESPONSE ADJUSTMENT (FACTORY ADJ.)(FOR AU-65 NTSC & PAL)

TEST POINT	MODE	TAPE USED	M.EQ.	INPUT SIGNAL	ADJUSTMENT
TP206 TPG202 TP207	E-E (EJECT)	-------	OSCILLOSCOPE	LINE SWEEP (0.1MHz ~ 12MHz) Shibasoku TO TP206 (HOT) TPG202 (GND)	VL201 (C REC BPF F.R.)

Step 1.
MACHINE CONDITION

SW202 (on W3) : TEST POSITION
TJ201 (on W3) : OPEN CONTACT

Step 2.

1. Supply a Line Sweep Signal (0.1MHz ~ 12MHz, 500mVp-p at TP207 to TP206 (HOT) and TPG202 (GND).
2. SCOPE CH1 : TP207
   SCOPE CH2 : Trigger from Generator
3. Adjust VL201 so that the trap frequency (A) of line sweep becomes
   NTSC 7.0 ± 0.1MHz
   PAL 9.0 ± 0.1MHz
4. SW202 (on W3) : NOT TEST POSITION
   TJ201 (on W3) : CLOSE CONTACT

TP207 ⊘ VL201

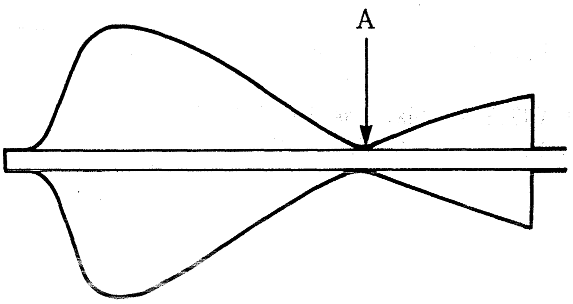

NTSC A = 7.0 ± 0.1MHz
PAL A = 9.0 ± 0.1MHz

7-35(B). C REC FM B.P.F. FREQUENCY RESPONSE ADJUSTMENT (FIELD ADJ.)(FOR AU-65 NTSC & PAL)

TEST POINT	MODE	TAPE USED	M.EQ.	INPUT SIGNAL	ADJUSTMENT
TP207 TP206 TP302	PLAY	ALIGNMENT TAPE RF SWEEP (0 ~ 12 MHz)	OSCILLOSCOPE	----------	VL201 (C REC BPF F.R.)

Step 1.
MACHINE CONDITION

SW202 (on W3) : TEST POSITION
TJ201 (on W3) : OPEN CONTACT

Step 2.

1. Connect a jumper wire between TP302 and TP206.
2. Play back the RF SWEEP portion of the Alignment Tape.
3. SCOPE : TP207
4. Adjust VL201 so that the trap frequency (A) of line sweep becomes
   NTSC 7.0 ± 0.1MHz
   PAL 9.0 ± 0.1MHz
5. SW202 (on W3) : NOT TEST POSITION
   TJ201 (on W3) : CLOSE CONTACT

TP207 ⊘ VL201

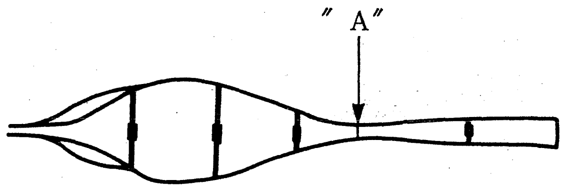

7-36-N.Y NON LINEAR DE-EMPHASIS LIMITER LEVEL ADJUSTMENT (FOR AU-65 NTSC)

(W3: MOD & DEMOD)

TEST POINT	MODE	TAPE USED	M.EQ.	INPUT SIGNAL	ADJUSTMENT
TP310	E-E (EJECT)	-------	OSCILLOSCOPE	COMPONENT 100% BOW TIE	VR323 (NL LIM BAL) VR324 (NL LIM LEV)

1. SCOPE : TP310
2. Adjust VR324 so that the level V1 becomes 340mV ± 5mVp-p.
3. SCOPE SETTING : DC mode
4. Adjust VR323 so that the level V2 equals the level V3 (50 : 50%).

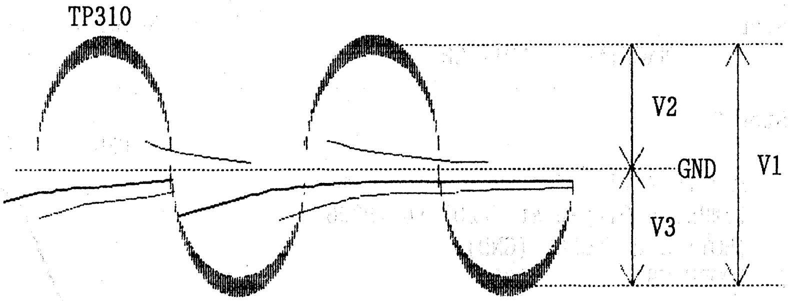

⊘ VR324 : V1 = 340mV ± 5mVp-p
⊘ VR323 : V2 = V3

7-36-P.Y NON LINEAR DE-EMPHASIS LIMITER LEVEL ADJUSTMENT (FOR AU-65 PAL)

(W3: MOD & DEMOD)

TEST POINT	MODE	TAPE USED	M.EQ.	INPUT SIGNAL	ADJUSTMENT
TP310	E-E (EJECT)	-------	OSCILLOSCOPE	COMPONENT 100% BOW TIE	VR323 (NL LIM BAL) VR324 (NL LIM LEV)

1. SCOPE : TP310
2. Adjust VR324 so that the level V1 becomes 360mV ± 5mVp-p.
3. SCOPE SETTING : DC mode
4. Adjust VR323 so that the level V2 equals the level V3 (50 : 50%).

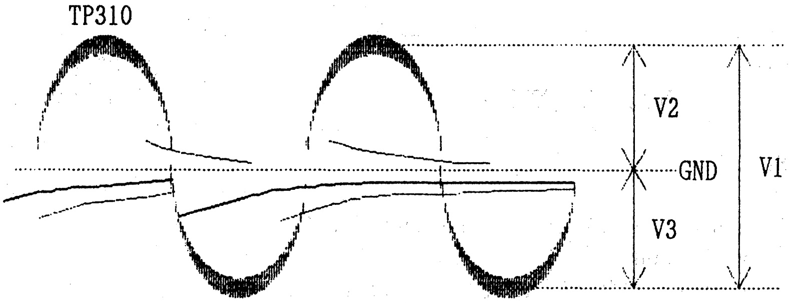

⊘ VR324 : V1 = 360mV ± 5mVp-p
⊘ VR323 : V2 = V3

7-37-N. C NON LINEAR DE-EMPHASIS LIMITER ADJUSTMENT (FOR AU-65 NTSC)

(W3 MOD & DEMOD)

TEST POINT	MODE	TAPE USED	M.EQ.	INPUT SIGNAL	ADJUSTMENT
TP707	E-E (EJECT)	-------	OSCILLOSCOPE	COMPONENT 100% BOW TIE	VR720 (LIM BAL) VR721 (NL LIM LEV)

1. Observe the Pb signal of CTCM signal and exapand the Time/Div. of Pb signal.
2. Adjust VR721 so that the level V1 becomes 340mV ± 5mVp-p.
3. SCOPE SETTING : DC mode
4. Adjust VR720 so that the level V2 equals the level V3 (50 : 50%).

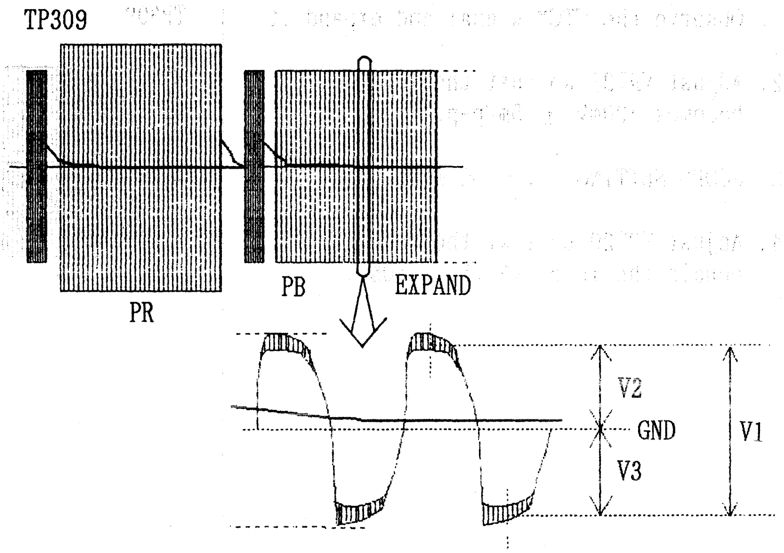

⊘ VR721 : V1 = 340mV ± 5mVp-p
⊘ VR720 : V2 = V3

7-37-P. C NON LINEAR DE-EMPHASIS LIMITER ADJUSTMENT (FOR AU-65 PAL)

(W3 MOD & DEMOD)

TEST POINT	MODE	TAPE USED	M.EQ.	INPUT SIGNAL	ADJUSTMENT
TP707	E-E (EJECT)	-------	OSCILLOSCOPE	COMPONENT 100% BOW TIE	VR720 (LIM BAL) VR721 (NL LIM LEV)

1. Observe the CTCM signal and expand it.
2. Adjust VR721 so that the level V1 becomes 400mV ± 5mVp-p.
3. SCOPE SETTING : DC mode
4. Adjust VR720 so that the level V2 equals the level V3 (50 : 50%).

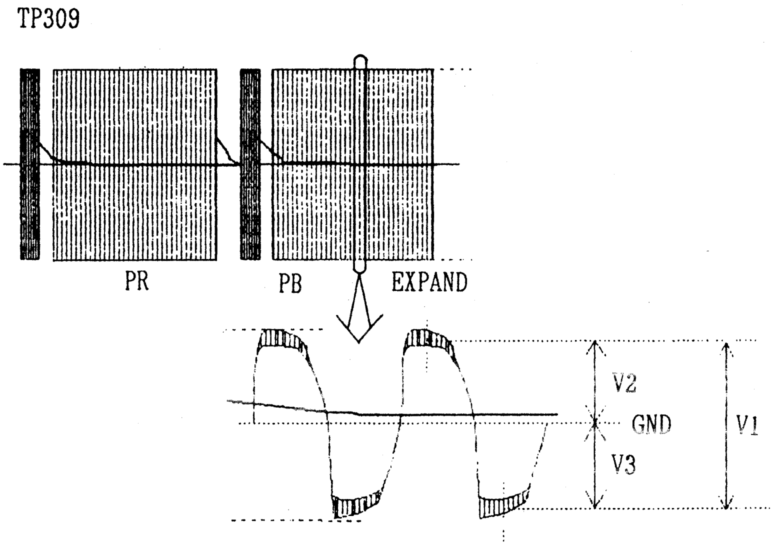

⊘ VR721 : V1 = 400mV ± 5mVp-p
⊘ VR720 : V2 = V3

7-38-P. Y PLAYBACK GROUP DELAY EQ ADJUSTMENT (FOR AU-65/63/62 PAL)

(W3 MOD & DEMOD)

TEST POINT	MODE	TAPE USED	M.EQ.	INPUT SIGNAL	ADJUSTMENT
TP309	PALY	ALIGNMENT SWEEP	OSCILLOSCOPE	---------	VL302

Note: This adjustment is PAL model only. Step 1. 1. Open the jumper TJ302.	TJ302 → OPEN
Step 2. 1. Adjust VL302 so that trap frequency (A) is 4.5 ± 0.1MHz.	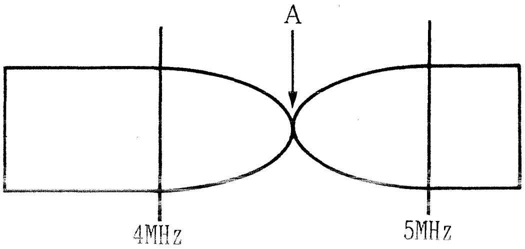 A = 4.5 ± 0.1 MHz
Step 3. 1. After this adjustment short the jumper TJ302.	TJ302 → SHORT

7-39-N. Y PLAYBACK FREQUENCY RESPONSE ADJUSTMENT (COARSE) (FOR AU-62/AU-65 NTSC)

(W3: MOD & DEMOD)

TEST POINT	MODE	TAPE USED	M.EQ.	INPUT SIGNAL	ADJUSTMENT
TP309 F29·AB EDGE CONNECTOR (Trigger)	PLAY	ALIGNMENT TAPE SWEEP	OSCILLOSCOPE	-------	VR315 R/P 1 (CH1) VR316 R/P 2 (CH2)

1. SCOPE CH1 : TP309
   SCOPE CH2 : F29·AB EDGE CONNECTOR (Trigger)
2. SCOPE SETTING : Trigger Slope (+)
3. Adjust VR315 so that the Y R/P CH1 frequency response is 95% ± 10% at 4.0MHz portion.
4. SCOPE SETTING : Trigger Slope (-)
5. Adjust VR316 so that the Y R/P CH2 frequency response is 95% ± 10% at 4.0MHz portion.

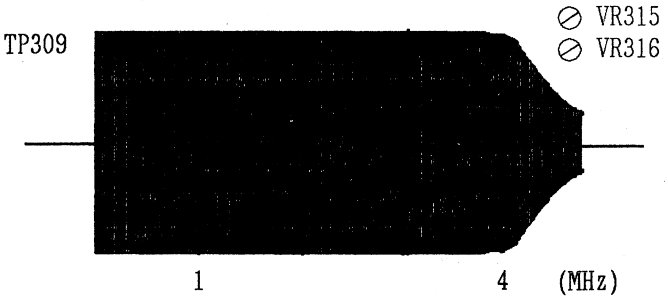

REF : 0.5MHz = 100%
SPEC : 4MHz = 95% ± 10%

7-39-P. Y PLAYBACK FREQUENCY RESPONSE ADJUSTMENT (COARSE) (FOR AU-62/AU-65 PAL)

(W3: MOD & DEMOD)

TEST POINT	MODE	TAPE USED	M.EQ.	INPUT SIGNAL	ADJUSTMENT
TP309 F29·AB EDGE CONNECTOR (Trigger)	PLAY	ALIGNMENT TAPE SWEEP	OSCILLOSCOPE	-------	VR315 R/P 1 (CH1) VR316 R/P 2 (CH2)

1. SCOPE CH1 : TP309
   SCOPE CH2 : F29·AB EDGE CONNECTOR (Trigger)
2. SCOPE SETTING : Trigger Slope (+)
3. Adjust VR315 so that the Y R/P CH1 frequency response is 95% ± 10% at 5.0MHz portion.
4. SCOPE SETTING : Trigger Slope (-)
5. Adjust VR316 so that the Y R/P CH2 frequency response is 95% ± 10% at 5.0MHz portion.

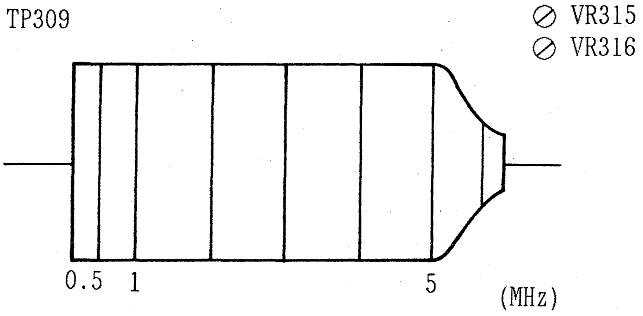

REF : 0.5MHz = 100%
SPEC : 5MHz = 95% ± 10%

7-40-N. Y PLAYBACK FREQUENCY RESPONSE ADJUSTMENT (COARSE) (FOR AU-63 NTSC)

(W3: MOD & DEMOD)

TEST POINT	MODE	TAPE USED	M.EQ.	INPUT SIGNAL	ADJUSTMENT
TP309 F28·AB EDGE CONNECTOR (Trigger)	PLAY	ALIGNMENT TAPE SWEEP	OSCILLOSCOPE	-------	VR313 AT 1 (CH1) VR314 AT 2 (CH2)

1. SCOPE CH1 : TP309
   SCOPE CH2 : F28·AB EDGE CONNECTOR (Trigger)
2. SCOPE SETTING : Trigger Slope (+)
3. Adjust VR313 so that the Y AT CH1 frequency response is 95% ± 10% at 4.0MHz portion.
4. SCOPE SETTING : Trigger Slope (-)
5. Adjust VR314 so that the Y AT CH2 frequency response is 95% ± 10% at 4.0MHz portion.

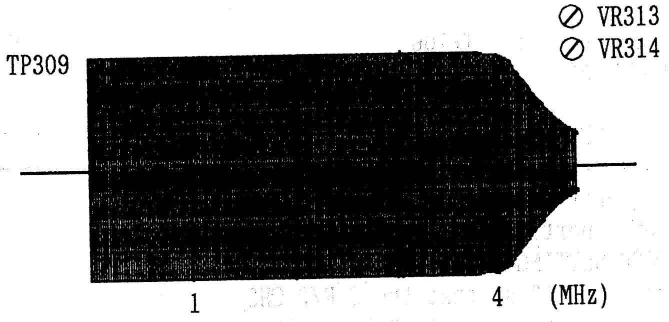

REF : 0.5MHz = 100%
SPEC : 4MHz = 95% ± 10%

7-40-P. Y PLAYBACK FREQUENCY RESPONSE ADJUSTMENT (COARSE) (FOR AU-63 PAL)

(W3: MOD & DEMOD)

TEST POINT	MODE	TAPE USED	M.EQ.	INPUT SIGNAL	ADJUSTMENT
TP309 F28·AB EDGE CONNECTOR (Trigger)	PLAY	ALIGNMENT TAPE SWEEP	OSCILLOSCOPE	-------	VR313 AT 1 (CH1) VR314 AT 2 (CH2)

1. SCOPE CH1 : TP309
   SCOPE CH2 : F28·AB EDGE CONNECTOR (Trigger)
2. SCOPE SETTING : Trigger Slope (+)
3. Adjust VR313 so that the Y AT CH1 frequency response is 95% ± 10% at 5.0MHz portion.
4. SCOPE SETTING : Trigger Slope (-)
5. Adjust VR314 so that the Y AT CH2 frequency response is 95% ± 10% at 5.0MHz portion.

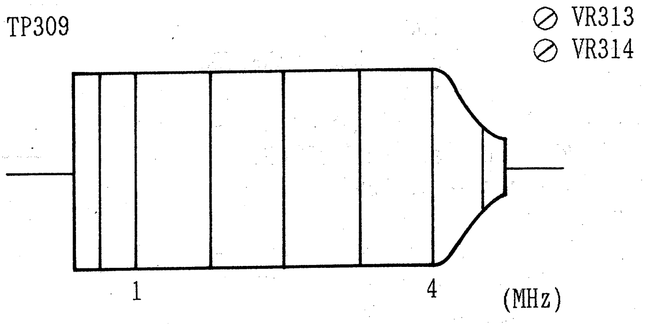

REF : 0.5MHz = 100%
SPEC : 5MHz = 95% ± 10%

7-41. C PLAYBACK FREQUENCY RESPONSE ADJUSTMENT (COARSE) (FOR AU-62/AU-65 NTSC & PAL)

TEST POINT	MODE	TAPE USED	M.EQ.	INPUT SIGNAL	ADJUSTMENT
TP706 F33·AB EDGE CONNECTOR (Trigger)	PLAY	ALIGNMENT TAPE SWEEP	OSCILLOSCOPE	-------	VR712 R/P 1 (CH1) VR713 R/P 2 (CH2)

1. SCOPE CH1 : TP706
   SCOPE CH2 : F33·AB EDGE CONNECTOR (Trigger)
2. SCOPE SETTING : Trigger Slope (+)
3. Adjust VR712 so that the C R/P CH1 frequency response is 95% ± 10% at 1.5MHz portion.
4. SCOPE SETTING : Trigger Slope (-)
5. Adjust VR713 so that the C R/P CH2 frequency response is 95% ± 10% at 1.5MHz portion.

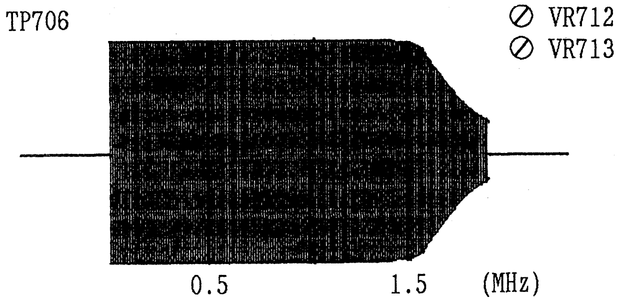

REF : 0.25MHz = 100%
SPEC : 1.5MHz = 95% ± 10%

7-42. C PLAYBACK FREQUENCY RESPONSE ADJUSTMENT (COARSE) (FOR AU-63 NTSC & PAL)

(W3: MOD & DEMOD)

TEST POINT	MODE	TAPE USED	M.EQ.	INPUT SIGNAL	ADJUSTMENT
TP706 F32·AB EDGE CONNECTOR (Trigger)	PLAY	ALIGNMENT TAPE SWEEP	OSCILLOSCOPE	-------	VR710 AT 1 (CH1) VR711 AT 2 (CH2)

1. SCOPE CH1 : TP706
   SCOPE CH2 : F32·AB EDGE CONNECTOR (Trigger)
2. SCOPE SETTING : Trigger Slope (+)
3. Adjust VR710 so that the C AT CH1 frequency response is 95% ± 10% at 1.5MHz portion.
4. SCOPE SETTING : Trigger Slope (-)
5. Adjust VR711 so that the C AT CH2 frequency response is 95% ± 10% at 1.5MHz portion.

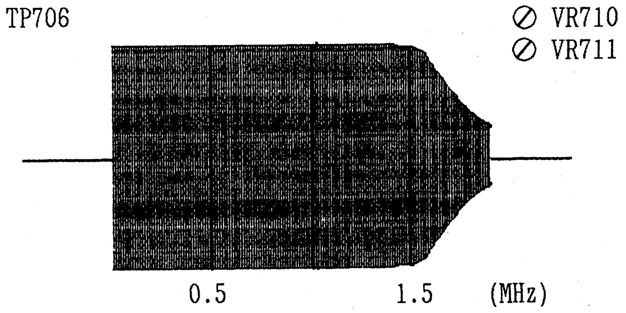

REF : 0.25MHz = 100%
SPEC : 1.5MHz = 95% ± 10%

7-43. Y DEMOD OUTPUT DC LEVEL ADJUSTMENT (FOR AU-65/63/62 PAL)

(W3: MOD & DEMOD)

TEST POINT	MODE	TAPE USED	M.EQ.	INPUT SIGNAL	ADJUSTMENT
TP311	PLAY	ALIGNMENT COLOUR BAR	OSCILLOSCOPE	-------	VR325 (OUT DC)

Note: This adjustment is PAL model only.

1. Adjust VR325 so that the pedestal level is DC 0 ± 0.1V.

7-44. C DEMOD OUTPUT DC LEVEL ADJUSTMENT (FOR AU-65/63/62 PAL)

(W3: MOD & DEMOD)

TEST POINT	MODE	TAPE USED	M.EQ.	INPUT SIGNAL	ADJUSTMENT
TP708	PLAY	ALIGNMENT COLOUR BAR	OSCILLOSCOPE	-------	VR722 (OUT DC)

Note:
This adjustment is PAL model only.

1. Adjust VR722 so that blanking DC level is DC 0 ± 0.1V.

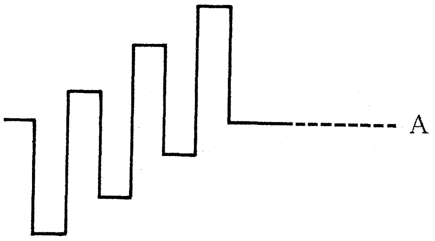

A = 0 ± 0.1V (DC)

8. TBC & SYNC GEN. (W1) BOARD (1/2)

TBC & SYNC GEN. SECTION (1/2) (W1) FLOWCHART FOR AU-65, AU-63 AND AU-62

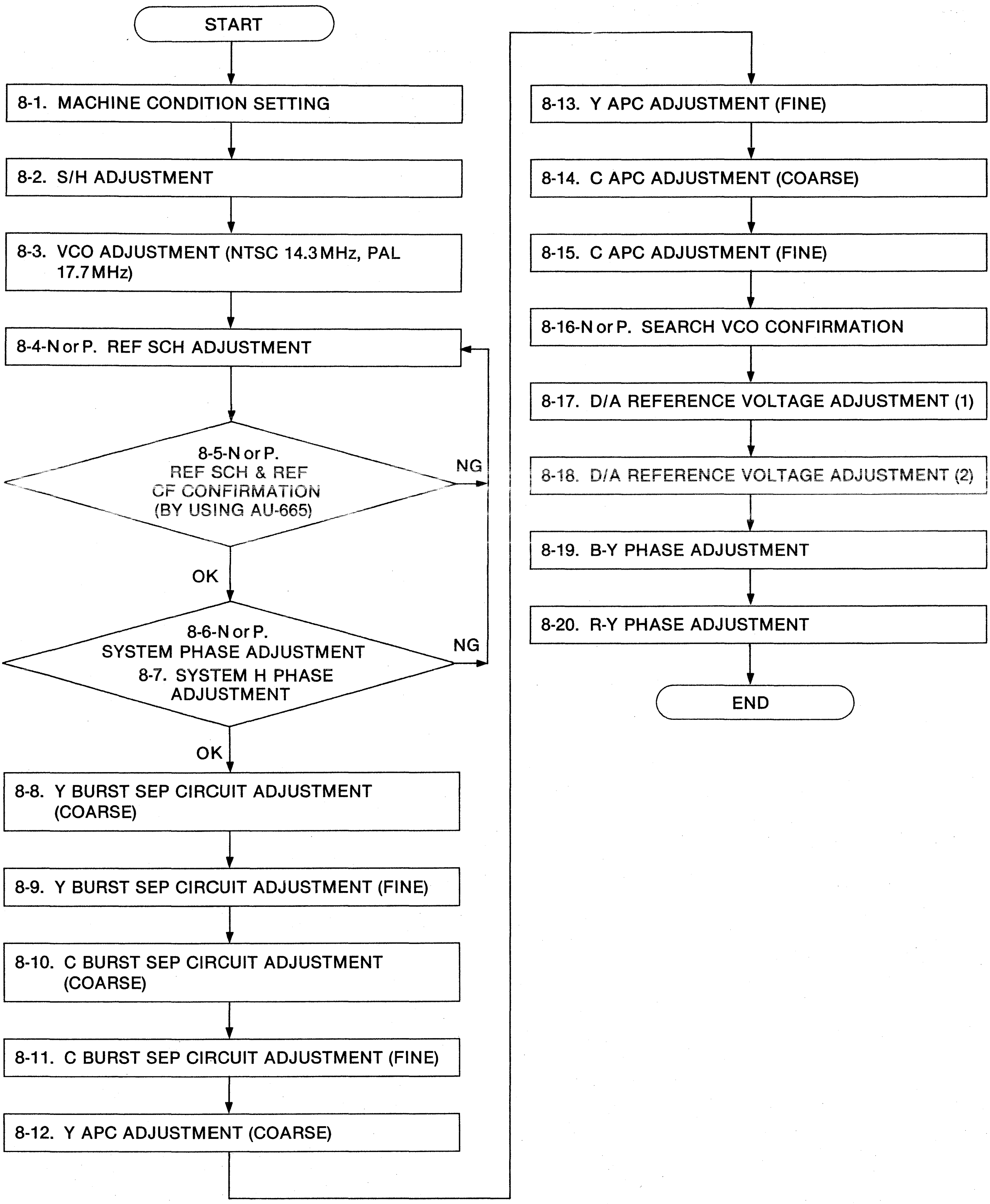
START
8-1. MACHINE CONDITION SETTING
8-2. S/H ADJUSTMENT
8-3. VCO ADJUSTMENT (NTSC 14.3MHz, PAL 17.7MHz)
8-4-N or P. REF SCH ADJUSTMENT
8-5-N or P. REF SCH & REF CF CONFIRMATION (BY USING AU-665)
NG
OK
8-6-N or P. SYSTEM PHASE ADJUSTMENT
8-7. SYSTEM H PHASE ADJUSTMENT
NG
OK
8-8. Y BURST SEP CIRCUIT ADJUSTMENT (COARSE)
8-9. Y BURST SEP CIRCUIT ADJUSTMENT (FINE)
8-10. C BURST SEP CIRCUIT ADJUSTMENT (COARSE)
8-11. C BURST SEP CIRCUIT ADJUSTMENT (FINE)
8-12. Y APC ADJUSTMENT (COARSE)
8-13. Y APC ADJUSTMENT (FINE)
8-14. C APC ADJUSTMENT (COARSE)
8-15. C APC ADJUSTMENT (FINE)
8-16-N or P. SEARCH VCO CONFIRMATION
8-17. D/A REFERENCE VOLTAGE ADJUSTMENT (1)
8-18. D/A REFERENCE VOLTAGE ADJUSTMENT (2)
8-19. B-Y PHASE ADJUSTMENT
8-20. R-Y PHASE ADJUSTMENT
END

8. TBC & SYNC GEN. (W1) BOARD (1/2)

8-1. MACHINE CONDITION SETTING (FOR AU-65/63/62 NTSC & PAL)

To change the Input SCH Phase, another MII VTR is required Use the SCH Phase Adjustment Fixture as following adjustment section.

*NOTE:

1. When AU-665 is used for SCH Adjustment, use SYSTEM SC PHASE (COARSE & FINE) VR on the Front Sub Panel (Behind the Front Panel).

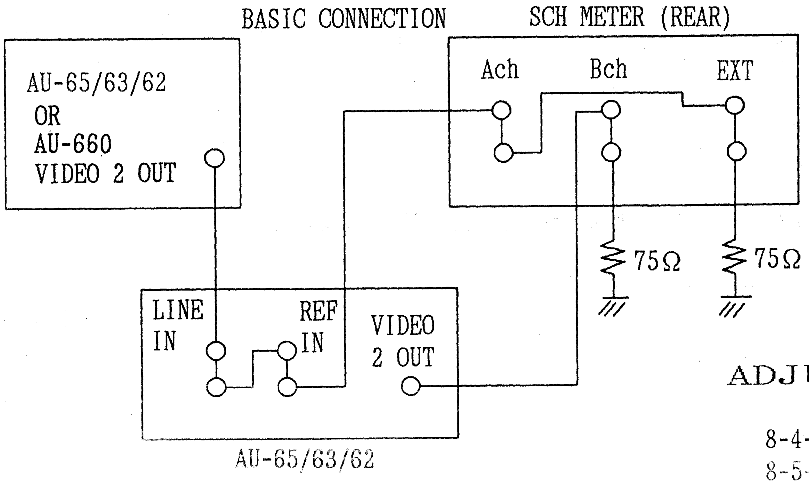
BASIC CONNECTION
SCH METER (REAR)
Ach
Bch
EXT
AU-65/63/62
OR
AU-660
VIDEO 2 OUT
75Ω
75Ω
LINE IN
REF IN
VIDEO 2 OUT
AU-65/63/62

ADJUSTMENT SECTION

8-4-N or 8-4-P. REFERENCE SCH ADJUSTMENT
8-5-N or 8-5-P. REFERENCE SCH & REFERENCE CF CONFIRMATION
8-6-N or 8-6-P. SYSTEM PHASE ADJUSTMENT
8-7. SYSTEM H PHASE ADJUSTMENT

8-2. S/H ADJUSTMENT (FOR AU-65/63/62 NTSC & PAL)

(W1 TBC & SYNC GEN)

TEST POINT	MODE	TAPE USED	M.EQ.	INPUT SIGNAL	ADJUSTMENT
TP203 TP204	E-E (EJECT)	-----	OSCILLOSCOPE	COMPOSITE REF. VIDEO SIGNAL TO REF. VIDEO IN	VR201 (S/H PHASE)

Step 1. MACHINE CONDITION	Refer to SET UP Conditions at the beginning of this SECTION (TBC & SYNC GEN W1).
Step 2. 1. SCOPE CH1 : TP203 SCOPE CH2 : TP204 (Trigger) 2. Adjust VR201 so that the center point of S/H pulse at TP204 is in the center point of the burst signal at TP203.	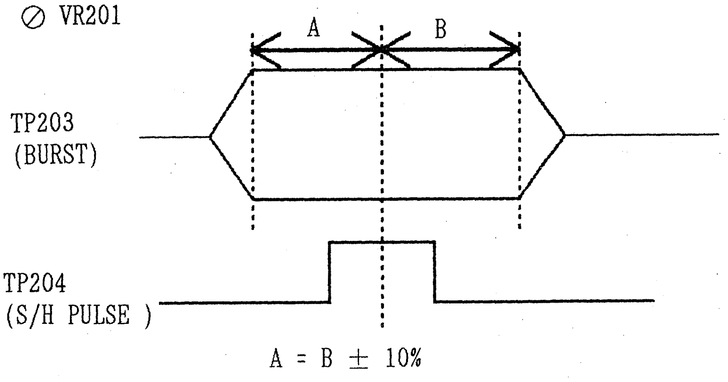 ⊘ VR201 A B TP203 (BURST) TP204 (S/H PULSE) A = B ± 10%

8-3. VCO ADJUSTMENT (NTSC 14.3MHz, PAL 17.7MHz) (FOR AU-65/63/62 NTSC & PAL)

(W1 TBC & SYNC GEN)

TEST POINT	MODE	TAPE USED	M.EQ.	INPUT SIGNAL	ADJUSTMENT
TP206	E-E (EJECT)	-------	OSCILLOSCOPE	COMPOSITE REF. VIDEO SIGNAL TO REF. VIDEO IN	C234

1. Connect the SCOPE to TP206.
2. Adjust C234 so that D.C. voltage at TP206 is 0V.
3. Confirm C234 so that D.C. voltage at TP206 is 0V with no reference VIDEO signal.

8-4-N. REF SCH DET ADJUSTMENT
(FOR AU-65/63/62 NTSC)

(W1 TBC & SYNC GEN)

TEST POINT	MODE	TAPE USED	M.EQ.	INPUT SIGNAL	ADJUSTMENT
TP207 TP208 VIDEO 2 OUT	EJECT	-------	OSCILLOSCOPE SCH METER	REF VIDEO	VR202 (SCH DET)

Step 1. 1. Input reference signal to REF VIDEO input with SCH 0°.	
Step 2. 1. Connect the scope to TP207 and TP208 with H rate. 2. Adjust VR202 so that rising dege at TP208 pulse is center of the pulse at TP208 as shown in figure.	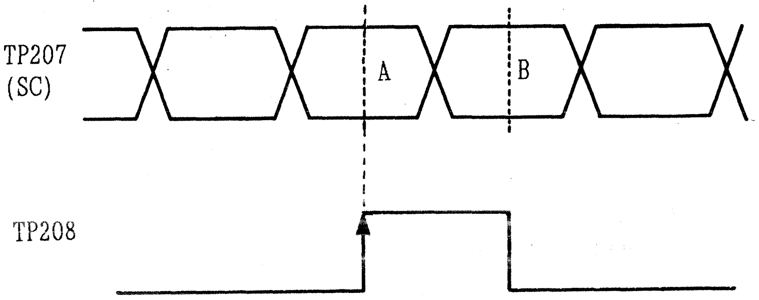
Step 3. 1. Connectthe SCH meter to VIDEO 2 OUT. 2. Confirm that SCH phase of VIDEO 2 OUT is near 0° with EXT REF mode. 3. If the SCH phase of VIDEO 2 OUT is near 180°, readjust Step 2. (When adjustment point of TP207 is "A", readjustment point is "B" as shown in figure.)	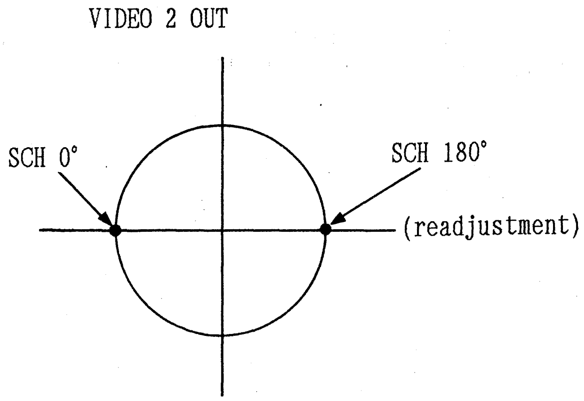

8-4-P. REF SCH DET ADJUSTMENT (FOR AU-65/63/62 PAL)

(W1 TBC & SYNC GEN)

TEST POINT	MODE	TAPE USED	M.EQ.	INPUT SIGNAL	ADJUSTMENT
FIELD REF AT SIGNAL GEN TP207 TP208 TP214	E-E (EJECT)	-------	OSCILLOSCOPE	REF VIDEO	VR202 (SCH DET)

Step 1. (CORASE)

1. Preset VR202 (SCH DET) to the 10 o'clock position.

⊘ VR202

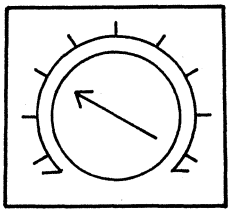

Step 2.

1. Confirm input reference signal to REF VIDEO input with SCH 0°.

2. Connect the scope to TP207 and TP208 with V rate.

3. Adjust VR202 so that the pulse at TP208 is center of the pulse at TP207 as shwon in figure.

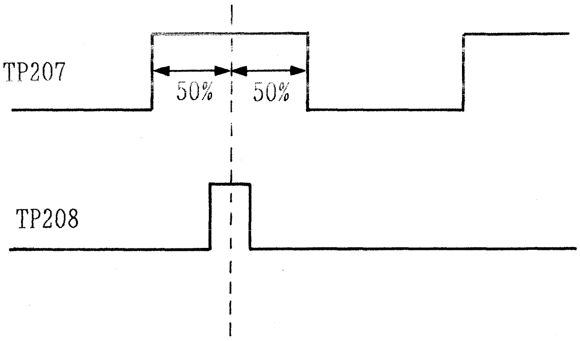

8-5-N. REF SCH & REF CF CONFIRMATION (BY USING AU-665) (FOR AU-65/63/62 NTSC)

(W1 TBC & SYNC GEN)

TEST POINT	MODE	TAPE USED	M.EQ.	INPUT SIGNAL	ADJUSTMENT
REF SCH LAMP (on Front Panel) TP214	EJECT (E-E)	------	OSCILLOSCOPE	REF. INPUT	------------

Note: This confirmation in case of having AU-665 only, for fine tune-up. Step 1. MACHINE CONDITION	Refer to Set Up Conditions at the beginning of this SECTION (TBC & SYNC GEN W1).
Step 2. 1. Set the REF. SCH Phase to +50° and -50°. 2. Confirm that the REF. SCH LAMP on the Front Panel turns "ON".	SCH PHASE = ±50° REF. SCH ☐ ON
Step 3. 1. CONNECTION 2. CONFIRMATION 1) Confirm that the CF Pulse of the Composite Signal Generator and TP214 (on W1) are the same phase.	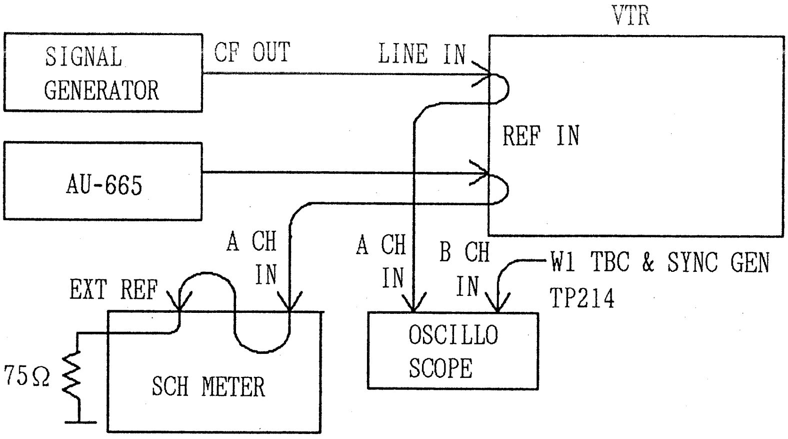 VTR SIGNAL GENERATOR CF OUT LINE IN REF IN AU-665 A CH IN A CH IN B CH IN W1 TBC & SYNC GEN TP214 EXT REF 75Ω SCH METER OSCILLO SCOPE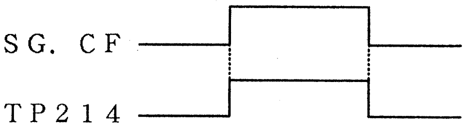
Step 4. 1. Set the REF. SCH Phase to +75° and -75°. 2. Confirm that the REF. SCH LAMP on the Front Panel turns "OFF".	SCH PHASE = ±75° REF. SCH ☐ OFF

8-5-P. REF SCH CONFIRMATION (BY USING AU-665)
(FOR AU-65/63/62 PAL)

(W1 TBC & SYNC GEN)

TEST POINT	MODE	TAPE USED	M.EQ.	INPUT SIGNAL	ADJUSTMENT
REF SCH LAMP (on Front Panel)	EJECT (E-E)	-------	OSCILLOSCOPE	REF VIDEO	------------

Note: This confirmation in case of having AU-665 only. Step 1. MACHINE CONDITION	Refer to Set Up Conditions at the beginning of this SECTION (TBC & SYNC GEN W1).
Step 2. 1. Change the REF SCH phase from -45° TO +45° by signal generator (TEK1411). 2. Confirm that the REF SCH LAMP on the Front Panel turns "ON".	REF. SCH ☐ ON SCH PHASE = ±45°
Step 3. 1. Change the REF SCH phase less than -65° and more than +65° by signal generator (TEK1411). 2. Confirm that the REF SCH LAMP on the Front Panel turns "OFF".	REF. SCH ☐ OFF SCH PHASE = Less than -65° = more than +65°
Step 4. 1. If it is not satisfied above condition, readjust, the REF. SCH adjustment 8-4-P and 8-5-P. (This adjustment.)	

8-6-N. SYSTEM PHASE ADJUSTMENT (FOR AU-65/63/62 NTSC)

(W1 TBC & SYNC GEN)

TEST POINT	MODE	TAPE USED	M.EQ.	INPUT SIGNAL	ADJUSTMENT
REF VIDEO VIDEO 2	E-E (EJECT) FOR AU-65 PLAY (FOR AU-63/62)	ALIGNMENT TAPE 75% COLOR BAR (FOR AU-63/62)	SCH METER	REF. VIDEO (SCH 0°)	VR203 (SYS SC PHASE) VR204 (SCH PHASE)

Step 1.
MACHINE CONDITION

Refer to the Set Up Conditions at the beginning of this SECTION (TBC & SYNC GEN W1).

Step 2.

1. Set the REF. SCH Phase to 0° with the another MII VTR.
2. SYS SC FINE (Pull Out Drawer) : DETENT POSITION
3. SCH METER'S trigger is EXT.
4. Change the SCH INPUT SELECT (A and B) alternatly.
5. Adjust VR203 so that the A channel REF VIDEO H phase and the B channel VIDEO 2 OUT H phase are the same phase on the SCH METER (0° ± 2°)
6. Adjust VR204 so that the burst phase becomes 0° ± 2° (Trigger : INT).

Note:
SCH ADJ. VR on the front pull out drawer is in detend position.

CONNECTION

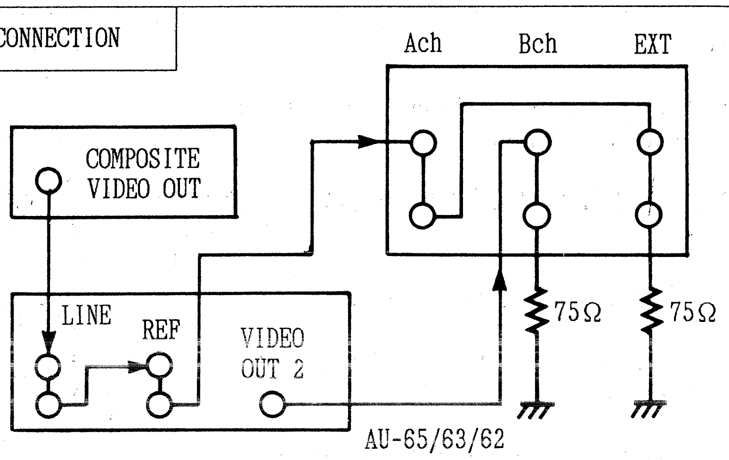

SPEC

SCH METER
(Trigger : EXT)

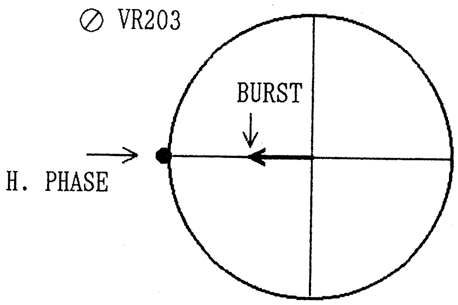

SPECIFICATION = 0° ± 2°

8-6-P. SYSTEM PHASE ADJUSTMENT (FOR AU-65/63/62 PAL)

(W1 TBC & SYNC GEN)

TEST POINT	MODE	TAPE USED	M.EQ.	INPUT SIGNAL	ADJUSTMENT
REF VIDEO VIDEO 2	E-E (EJECT) FOR AU-65 PLAY (FOR AU-63/62)	ALIGNMENT TAPE COLOR BAR (FOR AU-63/62)	SCH METER	REF. VIDEO (SCH 0°)	VR206 (CK1 PHASE) VR204 (SCH PHASE)

Step 1.
MACHINE CONDITION

Refer to the Set Up Conditions at the beginning of this SECTION (TBC & SYNC GEN W1).

Step 2.

1. Set the REF. SCH Phase to 0° with the another MII VTR.
2. SYS SC FINE (Pull Out Drawer) : DETENT POSITION
3. SCH METER'S trigger is EXT.
4. Change the SCH INPUT SELECT (A and B) alternatly.
5. Adjust VR204 and VR206 so that the A channel REF VIDEO H phase and the B channel VIDEO 2 OUT H phase are the same (0° ± 2°).

CONNECTION

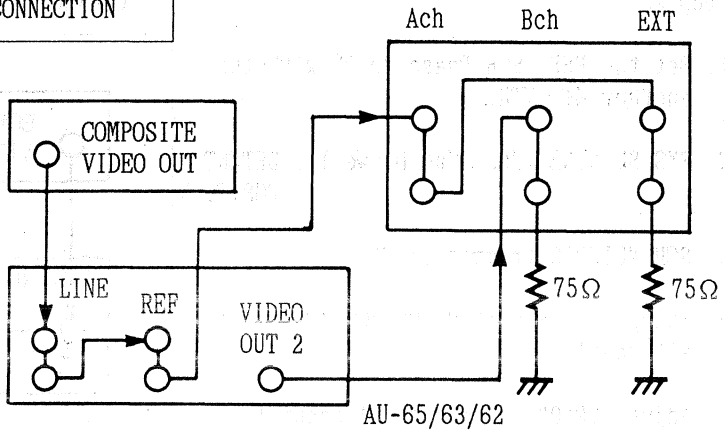
Ach
Bch
EXT
COMPOSITE VIDEO OUT
LINE
REF
VIDEO OUT 2
75Ω
75Ω
AU-65/63/62

SPEC

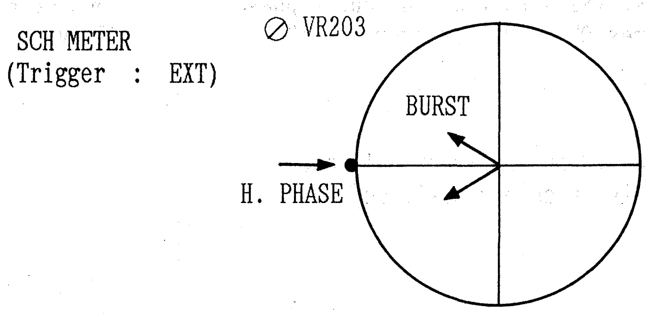
SCH METER
(Trigger : EXT)
⊘ VR203
BURST
H. PHASE

SPECIFICATION = 0° ± 2°

8-7. SYSTEM H PHASE ADJUSTMENT (FOR AU-65/63/62 NTSC & PAL)

(W1 TBC & SYNC GEN)

TEST POINT	MODE	TAPE USED	M.EQ.	INPUT SIGNAL	ADJUSTMENT
VIDEO 2 REF VIDEO	E-E (EJECT) FOR AU-65 PLAY (FOR AU-63/62)	ALIGNMENT TAPE COLOR BAR (FOR AU-63/62)	SCH METER (WFM Mode)	REF. VIDEO (SCH 0°)	VR205 (H PHASE)

1. CONNECTION

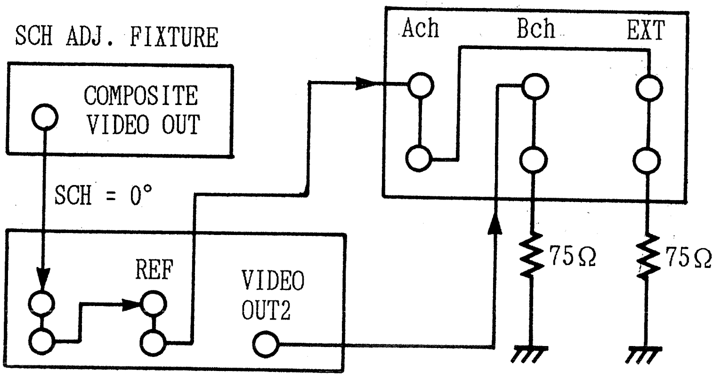
SCH ADJ. FIXTURE
COMPOSITE VIDEO OUT
SCH = 0°
REF
VIDEO OUT2
Ach
Bch
EXT
75Ω
75Ω

AU-62/AU-63/AU-65

2. MACHINE CONDITION
   Refer to the Machine Set Up Condition for TBC & SYNC GEN (W1).

3. SCH METER : WFM Mode
4. Change the channel A and B alternately.
5. Adjust VR205 so that the B channel's falling edge of Sync becomes the same as the A channel falling edge of Sync as shown.

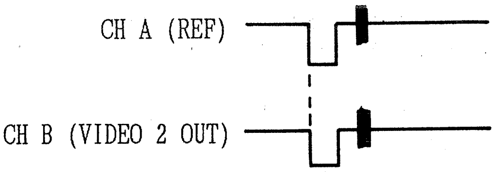
CH A (REF)
CH B (VIDEO 2 OUT)

6. CONFIRMATION

(1) REF VIDEO and VIDEO 2, H phase converge on same point when the power is turned ON and OFF.

(2) When the SYSTEM SC COARSE (on Front Pull Out Drawer) is changed to ±90°, SYSTEM SC phase moves
NTSC ± 70 n sec.
PAL ± 57 n sec.

7. If it is not within specification, readjust VR205.

8-8. Y BURST SEP CIRCUIT ADJUSTMENT (COARSE)
(FOR AU-65/63/62 NTSC & PAL)

(W1 TBC & SYNC GEN)

TEST POINT	MODE	TAPE USED	M.EQ.	INPUT SIGNAL	ADJUSTMENT
F15B (CONNECTOR) TP412	PLAY	ALIGNMENT TAPE COLOR BAR	OSCILLOSCOPE	-------	VR401 (Y SYNC PHASE)

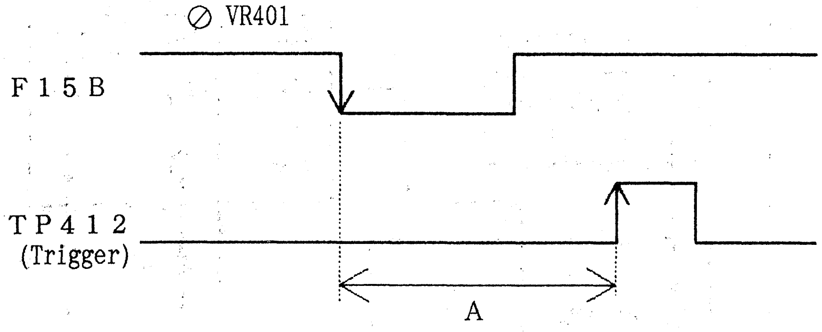

⊘ VR401
F15B
TP412
(Trigger)
A

NTSC A = 7.2 μsec.
PAL A = 7.0 μsec.
(Trigger : TP412)

8-9. Y BURST SEP CIRCUIT ADJUSTMENT (FINE)
(FOR AU-65/63/62 NTSC & PAL)

(W1 TBC & SYNC GEN)

TEST POINT	MODE	TAPE USED	M.EQ.	INPUT SIGNAL	ADJUSTMENT
TP412 TP413	PLAY	ALIGNMENT TAPE COLOR BAR	OSCILLOSCOPE	----------	VR401 (Y SYNC PHASE)

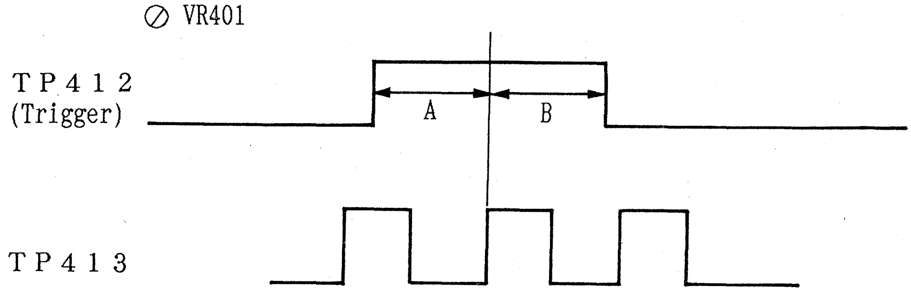

⊘ VR401
TP412
(Trigger)
A
B
TP413

A = B ± 10%

(Trigger : TP412)

8-10. C BURST SEP CIRCUIT ADJUSTMENT (COARSE)
(FOR AU-65/63/62 NTSC & PAL)

(W1 TBC & SYNC GEN)

TEST POINT	MODE	TAPE USED	M.EQ.	INPUT SIGNAL	ADJUSTMENT
F16B (CONNECTOR) TP416	PLAY	ALIGNMENT TAPE COLOR BAR	OSCILLOSCOPE	----------	VR409 (C SYNC PHASE)

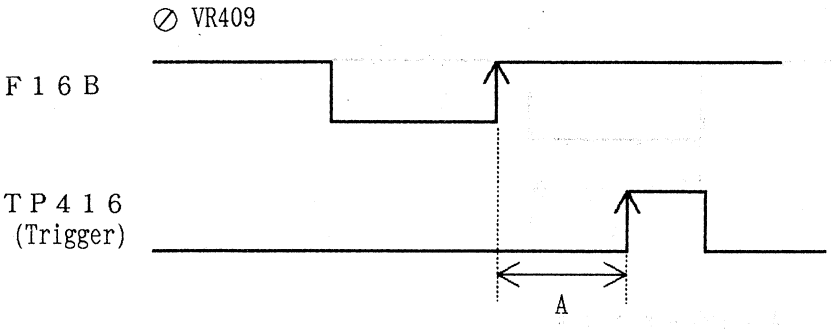
⊘ VR409
F16B
TP416
(Trigger)
A

NTSC A = 1.6 μsec.
PAL A = 1.5 μsec.
(Trigger : TP416)

8-11. C BURST SEP CIRCUIT ADJUSTMENT (FINE)
(FOR AU-65/63/62 NTSC & PAL)

(W1 TBC & SYNC GEN)

TEST POINT	MODE	TAPE USED	M.EQ.	INPUT SIGNAL	ADJUSTMENT
TP416 TP417	PLAY	ALIGNMENT TAPE COLOR BAR	OSCILLOSCOPE	----------	VR409 (C SYNC PHASE)

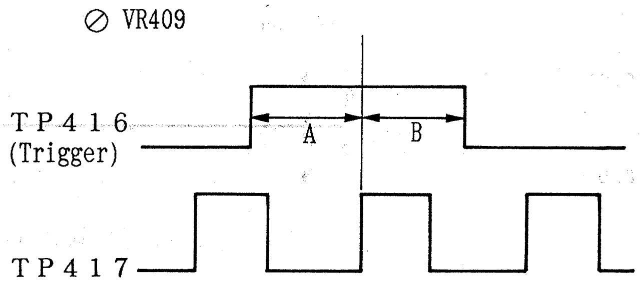
⊘ VR409
TP416
(Trigger)
A
B
TP417

A = B ± 10%

(Trigger : TP416)

8-12. Y APC ADJUSTMENT (COARSE)
(FOR AU-65/63/62 NTSC & PAL)

(W1 TBC & SYNC GEN)

TEST POINT	MODE	TAPE USED	M.EQ.	INPUT SIGNAL	ADJUSTMENT
TP427	PLAY	ALIGNMENT TAPE COLOR BAR	OSCILLOSCOPE	----------	VR403 (Y APC)

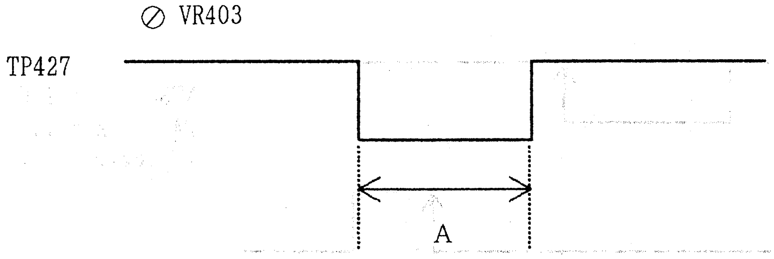

A = 150 n s ± 5 n s

8-13. Y APC ADJUSTMENT (FINE)
(FOR AU-65/63/62 NTSC & PAL)

(W1 TBC & SYNC GEN)

TEST POINT	MODE	TAPE USED	M.EQ.	INPUT SIGNAL	ADJUSTMENT
TP425	PLAY	ALIGNMENT TAPE COLOR BAR	OSCILLOSCOPE	----------	VR403 (Y APC)

1. SCOPE SETTING : GND
2. Set the scan line to the center position on the scope.
3. SCOPE SETTING : AC MODE
4. Adjust VR403 so that the A and B are balanced as shown.

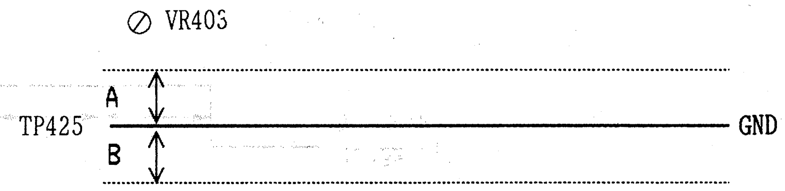

A = B ± 10% (V RATE)

8-14. C APC ADJUSTMENT (COARSE) (FOR AU-65/63/62 NTSC & PAL)

(W1 TBC & SYNC GEN)

TEST POINT	MODE	TAPE USED	M.EQ.	INPUT SIGNAL	ADJUSTMENT
TP426	PLAY	ALIGNMENT TAPE COLOR BAR	OSCILLOSCOPE	----------	VR408 (C APC)

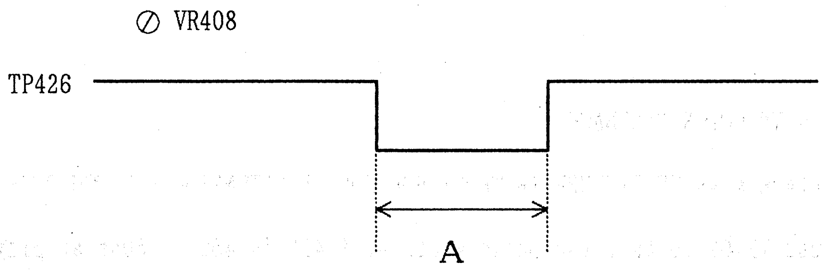

A = 150 n s ± 5 n s

8-15. C APC ADJUSTMENT (FINE) (FOR AU-65/63/62 NTSC & PAL)

(W1 TBC & SYNC GEN)

TEST POINT	MODE	TAPE USED	M.EQ.	INPUT SIGNAL	ADJUSTMENT
TP424	PLAY	ALIGNMENT TAPE COLOR BAR	OSCILLOSCOPE	----------	VR408 (C APC)

1. SCOPE SETTING : GND
2. Set the scan line to the center position on the scope.
3. SCOPE SETTING : AC MODE
4. Adjust VR408 so that the A and B are balanced as shown in figure.

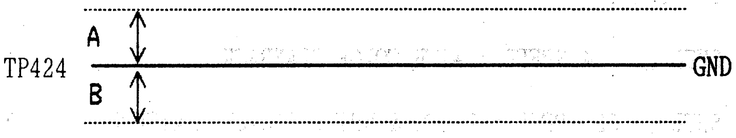

A = B ± 10% (V LATE)

8-16-N. SEARCH VCO CONFIRMATION (FOR AU-65/63/62 NTSC)

(W1: TBC & SYNC GEN)

TEST POINT	MODE	TAPE USED	M.EQ.	INPUT SIGNAL	ADJUSTMENT
TP422	SHTL & PLAY	ALIGNMENT TAPE COLOR BAR	OSCILLOSCOPE	----------	VR402 (SEARCH VCO)

CONFIRMATION

1. SHTL ± ×4 SPEED = WITH COLOR PLAYBACK.
2. SHTL ± 32 SPEED = BLACK & WHITE PICTURE (WITHOUT HORIZONTAL EXTENSION AND COMPRESSION)

If it is not, readjust VR402 so that the pulse width at TP422 is 450 ± 50ns at playback.

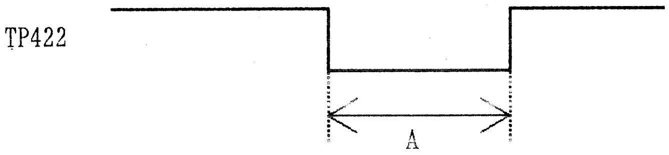

8-16-P. SEARCH VCO CONFIRMATION (FOR AU-65/63/62 PAL)

(W1: TBC & SYNC GEN)

TEST POINT	MODE	TAPE USED	M.EQ.	INPUT SIGNAL	ADJUSTMENT
TP422 F15B (W1 connector)	SHTL & PLAY	ALIGNMENT TAPE COLOR BAR	OSCILLOSCOPE	----------	VR402 (SEARCH VCO)

CONFIRMATION

1. SHTL ± ×4 SPEED = WITH COLOR PLAYBACK.
2. SHTL ± 32 SPEED = BLACK & WHITE PICTURE (WITHOUT HORIZONTAL EXTENSION AND COMPRESSION)

If it is not, readjust VR402 so that the pulse width at TP422 is as shown in Figure at playback.

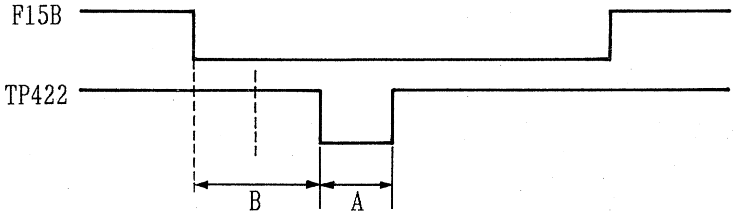

A × 2 = B ± 10%

8-17. D/A REFERENCE VOLTAGE ADJUSTMENT (1)
(FOR AU-65/63/62 NTSC & PAL)

(W1 TBC & SYNC GEN)

TEST POINT	MODE	TAPE USED	M.EQ.	INPUT SIGNAL	ADJUSTMENT
TP1	PLAY	ALIGNMENT TAPE COLOR BAR	Digital Voltage Meter	-------	VR1 (AJ. REF. 1)

Step 1. MACHINE CONDITION	VIDEO LEVEL VR = CENTER (on Pull Out Drawer)
Step 2. 1. Connect D.V.M. to TP1 and adjust VR1.	⊘ VR1 SPECIFICATION = 4.1 ± 0.01V (DC)

8-18. D/A REFERENCE VOLTAGE ADJUSTMENT (2)
(FOR AU-65/63/62 NTSC & PAL)

(W1 TBC & SYNC GEN)

TEST POINT	MODE	TAPE USED	M.EQ.	INPUT SIGNAL	ADJUSTMENT
TP2	PLAY	ALIGNMENT TAPE COLOR BAR	Digital Voltage Meter	-------	VR2 (AJ. REF. 2)

Step 1. MACHINE CONDITION	Set the switches on the Pull Out Drawer as follows. 1. VIDEO LEVEL VR : CENTER 2. CHROMA LEVEL : CENTER 3. PR LEVEL : CENTER 4. PB LEVEL : CENTER
Step 2. 1. Connect D.V.M. to TP2 and adjust VR2.	⊘ VR2 SPECIFICATION = 4.1 ± 0.01V (DC)

8-19. B-Y PHASE ADJUSTMENT (FOR AU-65/63/62 NTSC & PAL)

(W1 TBC & SYNC GEN)

Step 1.

1. Turn VR405 center position.

Note:
VR405 is for user, so confirm the user setting.

VR406

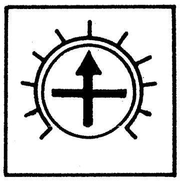

8-20. R-Y PHASE ADJUSTMENT (FOR AU-65/63/62 NTSC & PAL)

(W1 TBC & SYNC GEN)

Step 1.

1. Turn VR406 center position.

Note:
VR406 is for user, so confirm the user setting.

VR406

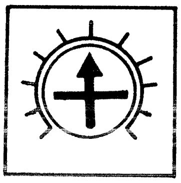

9. ENCODER (W2) BOARD (1/2)

ENCODER SECTION (1/2) (W2) FLOWCHART FOR AU-65, AU-63 AND AU-62

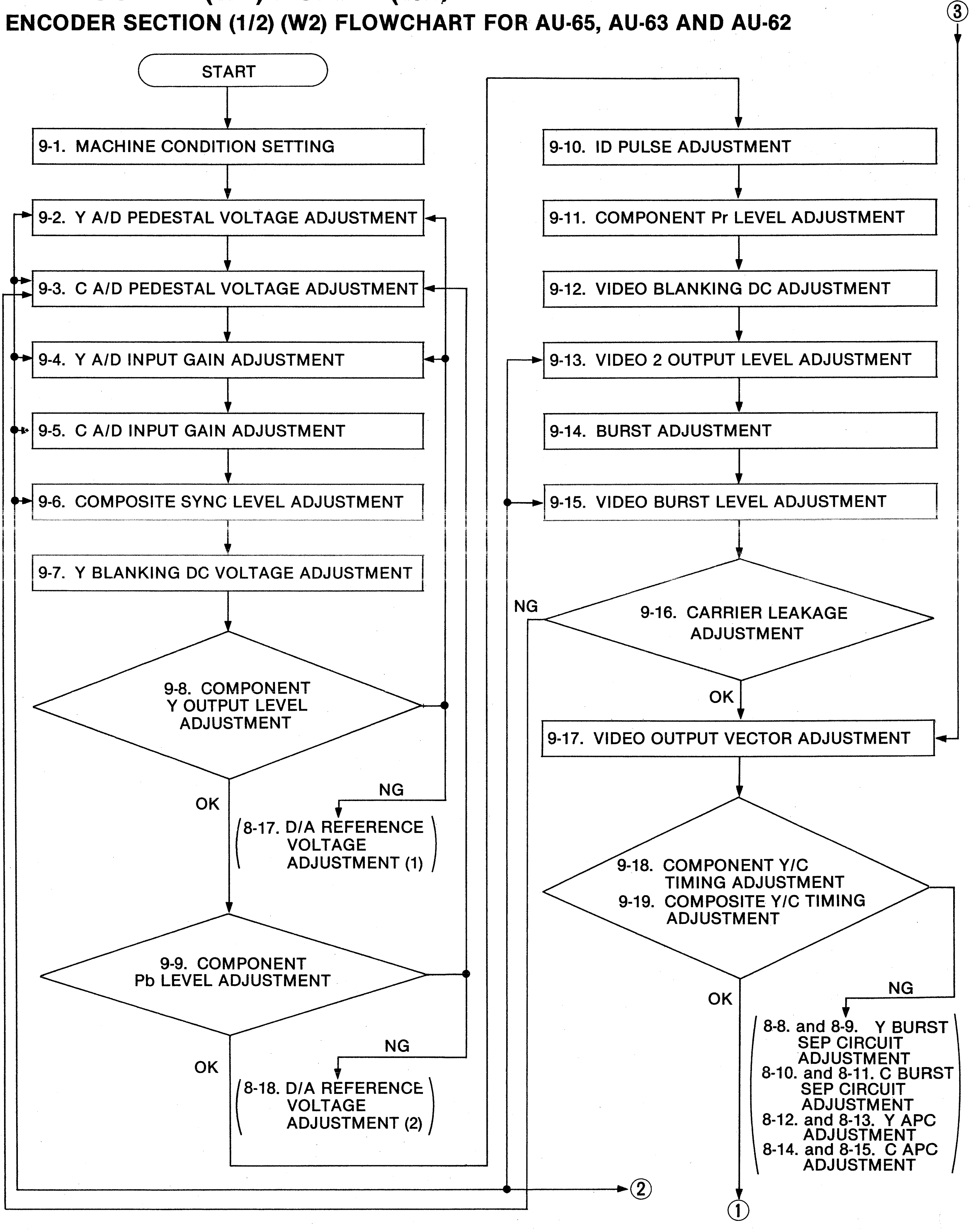
③
START
9-1. MACHINE CONDITION SETTING
9-2. Y A/D PEDESTAL VOLTAGE ADJUSTMENT
9-3. C A/D PEDESTAL VOLTAGE ADJUSTMENT
9-4. Y A/D INPUT GAIN ADJUSTMENT
9-5. C A/D INPUT GAIN ADJUSTMENT
9-6. COMPOSITE SYNC LEVEL ADJUSTMENT
9-7. Y BLANKING DC VOLTAGE ADJUSTMENT
9-8. COMPONENT Y OUTPUT LEVEL ADJUSTMENT
OK
NG
8-17. D/A REFERENCE VOLTAGE ADJUSTMENT (1)
9-9. COMPONENT Pb LEVEL ADJUSTMENT
OK
NG
8-18. D/A REFERENCE VOLTAGE ADJUSTMENT (2)
9-10. ID PULSE ADJUSTMENT
9-11. COMPONENT Pr LEVEL ADJUSTMENT
9-12. VIDEO BLANKING DC ADJUSTMENT
9-13. VIDEO 2 OUTPUT LEVEL ADJUSTMENT
9-14. BURST ADJUSTMENT
9-15. VIDEO BURST LEVEL ADJUSTMENT
NG
9-16. CARRIER LEAKAGE ADJUSTMENT
OK
9-17. VIDEO OUTPUT VECTOR ADJUSTMENT
9-18. COMPONENT Y/C TIMING ADJUSTMENT
9-19. COMPOSITE Y/C TIMING ADJUSTMENT
OK
NG
8-8. and 8-9. Y BURST SEP CIRCUIT ADJUSTMENT
8-10. and 8-11. C BURST SEP CIRCUIT ADJUSTMENT
8-12. and 8-13. Y APC ADJUSTMENT
8-14. and 8-15. C APC ADJUSTMENT
②
①

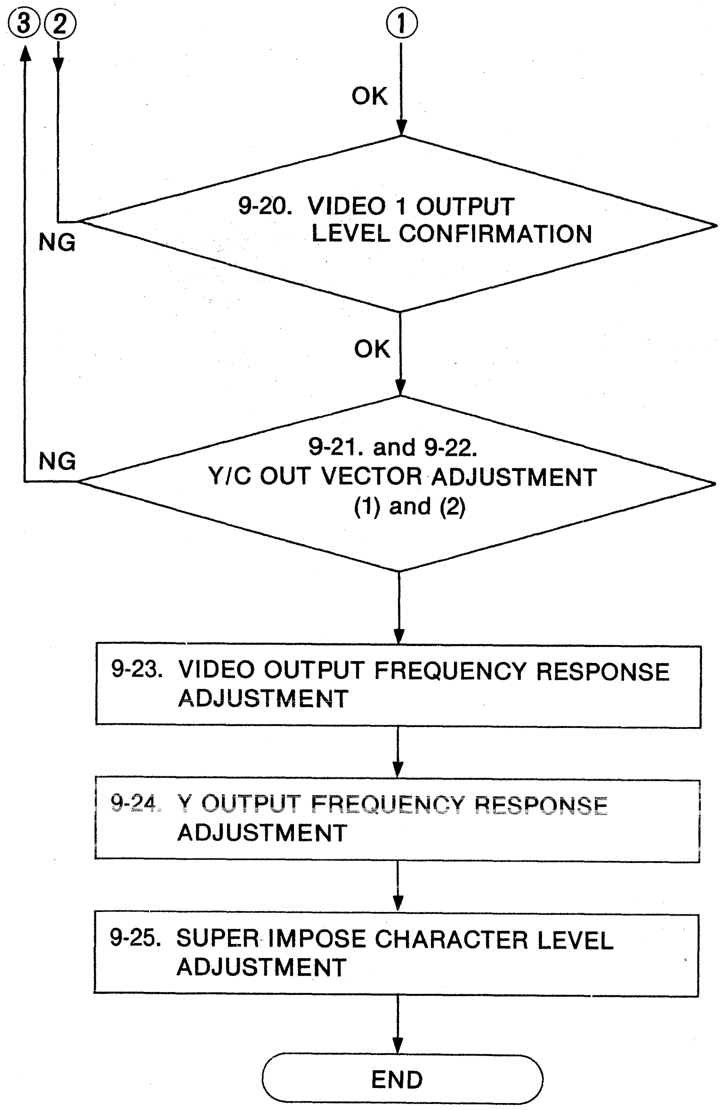
③
②
①
OK
9-20. VIDEO 1 OUTPUT LEVEL CONFIRMATION
NG
OK
9-21. and 9-22. Y/C OUT VECTOR ADJUSTMENT (1) and (2)
NG
9-23. VIDEO OUTPUT FREQUENCY RESPONSE ADJUSTMENT
9-24. Y OUTPUT FREQUENCY RESPONSE ADJUSTMENT
9-25. SUPER IMPOSE CHARACTER LEVEL ADJUSTMENT
END

9. ENCODER (W2) BOARD (1/2)

9-1. MACHINE CONDITION SETTING (FOR AU-65/63/62 NTSC & PAL)

Use 75Ω terminator with Waveform Monitor or Oscilloscope for level adjustment.

1. CF SELECT SW (on Front Sub Panel) ------------- NTSC 4F, PAL 8F
2. SYNC SELECT SW (on Front Sub Panel) ----------------------- AUTO
3. COMPONENT Y/Pr/Pb LEVEL VR (on Pull Out Drawer) --- DETENT POSITION
4. VIDEO LEVEL VR ----------------------------------- DETENT POSITION
5. SET UP LEVEL VR ----------------------------------- DETENT POSITION
6. CHROMA LEVEL VR ----------------------------------- DETENT POSITION
7. HUE VR ----------------------------------- DETENT POSITION

9-2. Y A/D PEDESTAL VOLTAGE ADJUSTMENT (FOR AU-65/63/62 NTSC & PAL)

(W2 ENCODER)

TEST POINT	MODE	TAPE USED	M.EQ.	INPUT SIGNAL	ADJUSTMENT
TP201	PLAY	ALIGNMENT TAPE 100% COLOR BAR	OSCILLOSCOPE	----------	VR 2 (Y REF)

1. SCOPE : TP201
2. When VR2 is turned, a step will appear at pedestal.
3. Adjust VR2 so that "A" part is "FLAT".

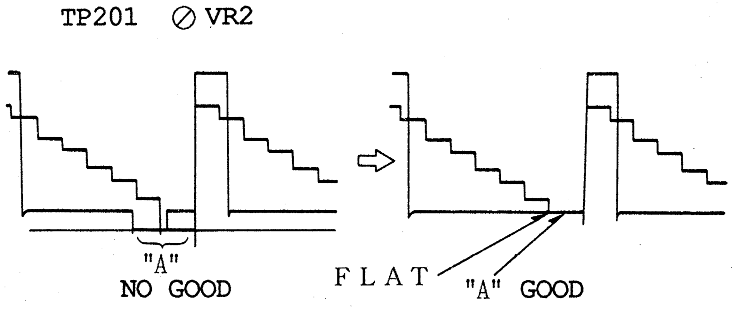

9-3. C A/D PEDESTAL VOLTAGE ADJUSTMENT (FOR AU-65/63/62 NTSC & PAL)

(W2 ENCODER)

TEST POINT	MODE	TAPE USED	M.EQ.	INPUT SIGNAL	ADJUSTMENT
COMPONENT Pb OUT	PLAY	ALIGNMENT TAPE 100% COLOR BAR	OSCILLOSCOPE	---------	VR 4 (C REF)

1. SCOPE : COMPONENT Pb OUT
2. When VR4 is turned, a step will appear appear at pedestal.
3. Adjust VR4 so that the step at pedestal is "FLAT".

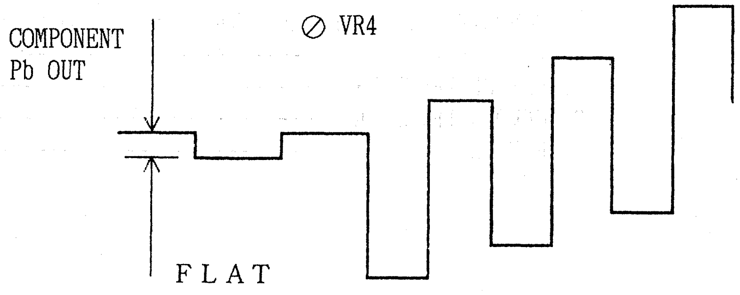

9-4. Y A/D INPUT GAIN ADJUSTMENT (FOR AU-65/63/62 NTSC & PAL)

(W2 ENCODER)

TEST POINT	MODE	TAPE USED	M.EQ.	INPUT SIGNAL	ADJUSTMENT
COMPONENT Y OUT	E-E (For AU-65) PLAY (For AU-63/62)	Pre-recorded Level Reference Color Bar (For AU-63/62)	WAVEFORM MONITOR OR OSCILLOSCOPE	COMPONENT COLOR BAR LEVEL REFERENCE SIGNAL	VR 1 (Y. G)

Step 1. (For AU-65)

1. SCOPE : COMPONENT Y OUT
2. Adjust VR1 so that the Top portion is clipped as shown in figure.

Step 2. (For AU-63/62)

1. SCOPE : COMPONENT Y OUT
2. Play back the Pre-recorded Color Bar Level Reference Signal.
3. Adjust VR1 so that the Top Portion of the Color Bar Level Reference Signal is clipped as shown in figure.

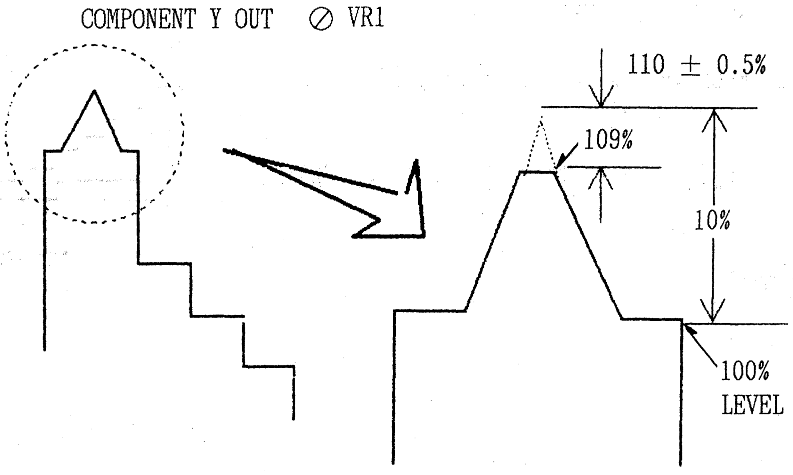

9-5. C A/D INPUT GAIN ADJUSTMENT (FOR AU-65/63/62 NTSC & PAL)

(W2 ENCODER)

TEST POINT	MODE	TAPE USED	M.EQ.	INPUT SIGNAL	ADJUSTMENT
TP 4	PLAY	ALIGNMENT COLOR BAR NTSC 75% PAL 100%	OSCILLOSCOPE	---------	VR 3 (C. G)

1. Adjust VR3 so that R-Y level is

NTSC : 1.22 ± 0.02Vp-p
PAL : 1.75 ± 0.02Vp-p

TP4 ⊘ VR3

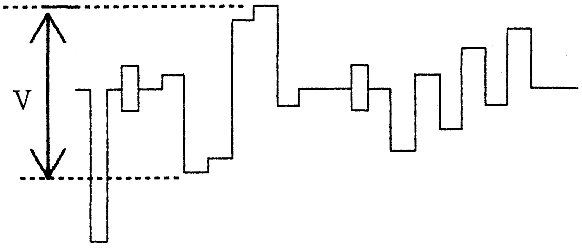

V = NTSC : 1.22 ± 0.02Vp-p
PAL : 1.75 ± 0.02Vp-p

9-6. COMPOSITE SYNC LEVEL ADJUSTMENT (FOR AU-65/63/62 NTSC & PAL)

(W2 ENCODER)

TEST POINT	MODE	TAPE USED	M.EQ.	INPUT SIGNAL	ADJUSTMENT
VIDEO 2 OUT	E-E (EJECT)	-------	OSCILLOSCOPE (with 75Ω terminator)	---------	VR210 (SYNC. G)

1. Adjust VR210 so that H-SYNC level is

NTSC : 0.286 ± 0.004Vp-p
PAL : 0.3 ± 0.006Vp-p

VIDEO 2 OUT

⊘ VR210

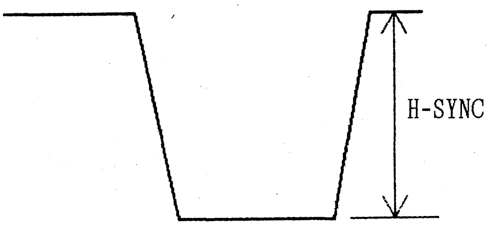

NTSC : H. SYNC LEVEL = 0.286 ± 0.004Vp-p
PAL : H. SYNC LEVEL = 0.3 ± 0.006Vp-p

9-7. Y BLANKING DC VOLTAGE ADJUSTMENT (FOR AU-65/63/62 NTSC & PAL)

(W2 ENCODER)

TEST POINT	MODE	TAPE USED	M.EQ.	INPUT SIGNAL	ADJUSTMENT
COMPONENT Y OUT	E-E (EJECT)	-----	OSCILLOSCOPE	---------	VR202 (Y. BLK DC)

1. Adjust VR202 so that H-BLANKING DC level is 0 ± 20mV at COMPONENT Y OUT.

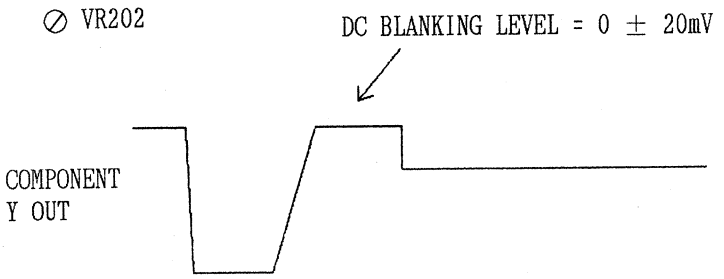
⊘ VR202
DC BLANKING LEVEL = 0 ± 20mV
COMPONENT
Y OUT

9-8. COMPONENT Y OUTPUT LEVEL ADJUSTMENT (FOR AU-65/63/62 NTSC & PAL)

(W2 ENCODER)

TEST POINT	MODE	TAPE USED	M.EQ.	INPUT SIGNAL	ADJUSTMENT
COMPONENT Y OUT	PLAY	ALIGNMENT TAPE COLOR BAR	OSCILLOSCOPE (with 75Ω terminator)	---------	VR200 (Y. G) VR201 (Y. DC)

1. Confirm that the sync level is 0.3 ± 0.005Vp-p.
2. If sync level is incorrect, readjust COMPOSITE SYNC LEVEL ADJ. (9-6)
3. Adjust VR200 so that the Y signal level is 0.7 ± 0.007Vp-p.
4. Adjust VR201 so that Y pedestal DC is 0 ± 5mV.

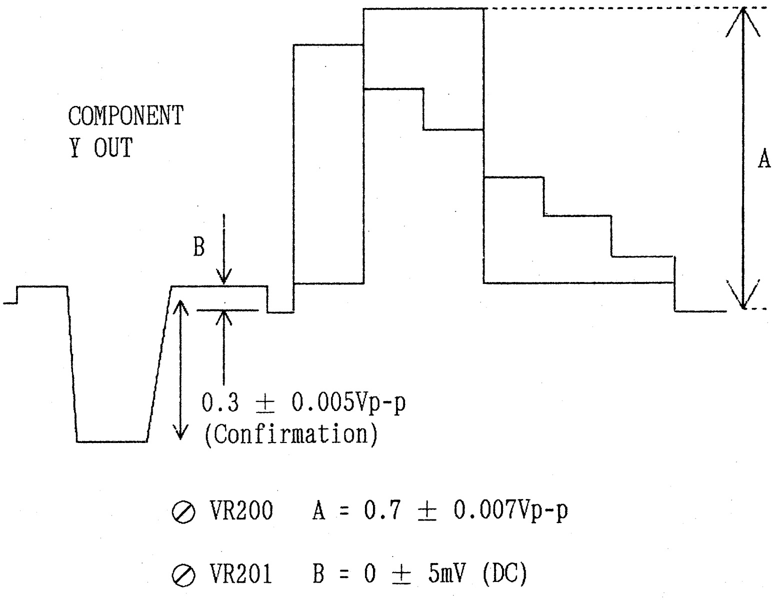
COMPONENT
Y OUT
A
B
0.3 ± 0.005Vp-p
(Confirmation)
⊘ VR200 A = 0.7 ± 0.007Vp-p
⊘ VR201 B = 0 ± 5mV (DC)

9-9. COMPONENT Pb LEVEL ADJUSTMENT (FOR AU-65/63/62 NTSC & PAL)

(W2 ENCODER)

TEST POINT	MODE	TAPE USED	M.EQ.	INPUT SIGNAL	ADJUSTMENT
COMPONENT Pb OUT	PLAY	ALIGNMENT TAPE COLOR BAR (NTSC 75%) (PAL 100%)	OSCILLOSCOPE (with 75Ω terminator)	---------	VR203 (PB. G) VR204 (PB. DC)

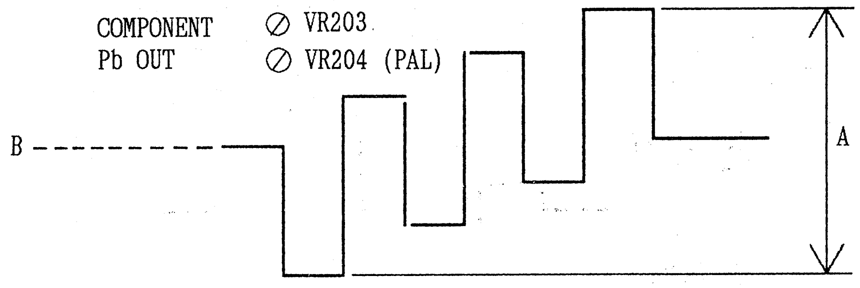

NTSC : A = 0.486 ± 0.005Vp-p
PAL : A = 0.7 ± 0.007Vp-p
"B" portion DC voltage = 0 ± 20mV

9-10. ID PULSE ADJUSTMENT (FOR AU-65/63/62 NTSC & PAL)

(W2 ENCODER)

TEST POINT	MODE	TAPE USED	M.EQ.	INPUT SIGNAL	ADJUSTMENT
COMPONENT Pb OUT	PLAY	ALIGNMENT TAPE COLOR BAR VISC	OSCILLOSCOPE (with 75Ω terminator)	----------	VR212 (ID BAL)

Step 1. MACHINE CONDITION	Refer to SET UP Conditions at the beginning of this SECTION (ENCODER - W2).
Step 2. 1. Adjust VR212 so that the ID pulse levels A and B are equal (See fig.) 2. Confirm that the ID pulse level is NTSC : A = B = 0.26 ~ 0.35V. PAL : A = B = 0.3 ~ 0.35V	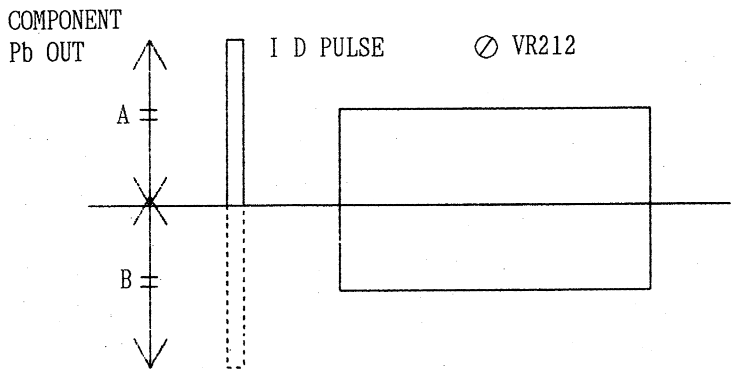 COMPONENT Pb OUT I D PULSE ⊘ VR212 A B NTSC A = B = 0.26 ~ 0.35Vp-p PAL A = B = 0.3 ~ 0.35Vp-p

9-11. COMPONENT Pr LEVEL ADJUSTMENT (FOR AU-65/63/62 NTSC & PAL)

(W2 ENCODER)

TEST POINT	MODE	TAPE USED	M.EQ.	INPUT SIGNAL	ADJUSTMENT
COMPONENT Pr OUT	PLAY	ALIGNMENT TAPE COLOR BAR (NTSC 75%) (PAL 100%)	OSCILLOSCOPE (with 75Ω terminator)	---------	VR205 (PR. G) VR206 (PR. DC)

Step 1. MACHINE CONDITION	Refer to SET UP Conditions at the beginning of this SECTION (ENCODER - W2).

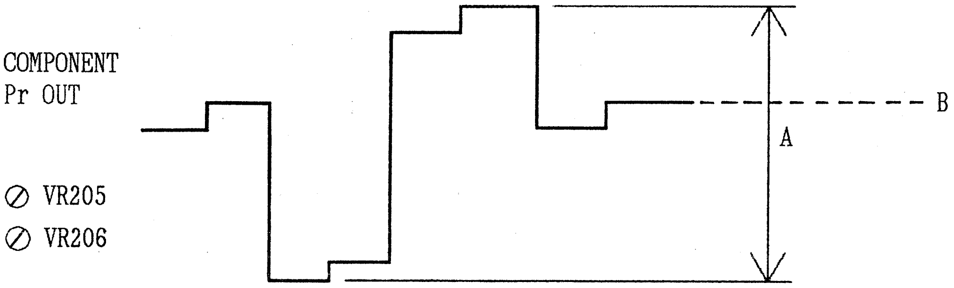
COMPONENT
Pr OUT
⊘ VR205
⊘ VR206
B
A

NTSC A = 0.486 ± 0.005Vp-p
PAL A = 0.7 ± 0.007Vp-p
"B" portion DC voltage 0 ± 20mVp-p

9-12. VIDEO BLANKING DC ADJUSTMENT (FOR AU-65/63/62 NTSC & PAL)

(W2 ENCODER)

TEST POINT	MODE	TAPE USED	M.EQ.	INPUT SIGNAL	ADJUSTMENT
VIDEO 2 OUT	EJECT	-----	OSCILLOSCOPE	---------	VR503 (V1, BLK, DC)

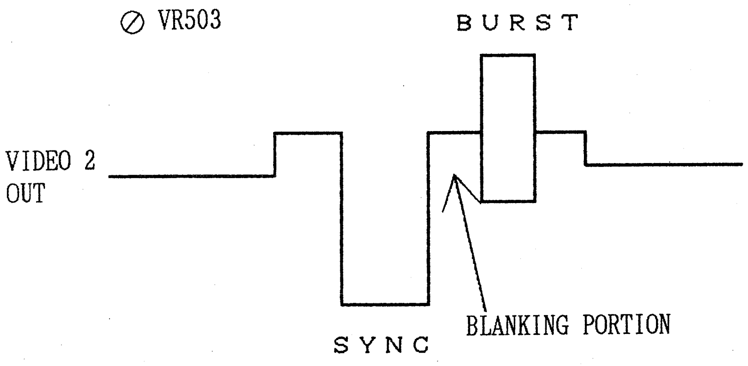
⊘ VR503
BURST
VIDEO 2
OUT
SYNC
BLANKING PORTION

VIDEO DC BLANKING LEVEL = 0 ± 20mV

9-13. VIDEO 2 OUTPUT LEVEL ADJUSTMENT
(FOR AU-65/63/62 NTSC & PAL)

(W2 ENCODER)

TEST POINT	MODE	TAPE USED	M.EQ.	INPUT SIGNAL	ADJUSTMENT
VIDEO 2 OUT	PLAY	ALIGNMENT TAPE COLOR BAR (NTSC 75%) (PAL 100%)	OSCILLOSCOPE (with 75Ω terminator)	---------	VR501 (VIDEO. G) VR502 (VIDEO. DC)

Step 1. MACHINE CONDITION	Refer to SET UP Conditions at the beginning of this SECTION (ENCODER - W2).

Step 2. [NTSC]

1. Adjust VR501 so that the video level (A) is 0.714 ± 0.007Vp-p. (NTSC)

2. Adjust VR502 so that the video DC LEVEL (B) is 0 ± 5mV DC.

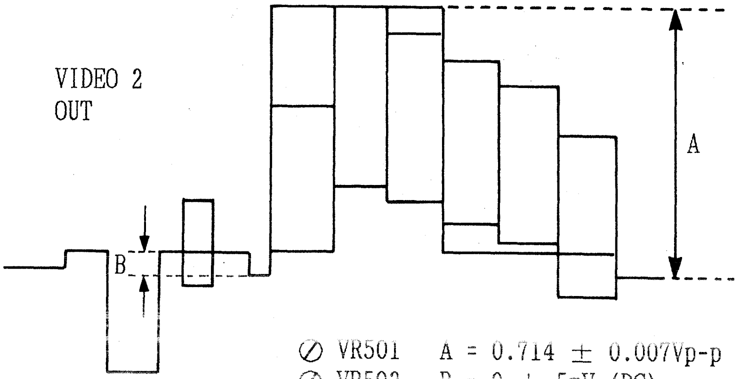

⊘ VR501 A = 0.714 ± 0.007Vp-p
⊘ VR502 B = 0 ± 5mV (DC)

Step 2. [PAL]

1. Adjust VR501 so that the video level (A) is 0.7 ± 0.007Vp-p (PAL).

2. Adjust VR502 so that the Vidoe DC level (B) is 0 ± 5mV DC.

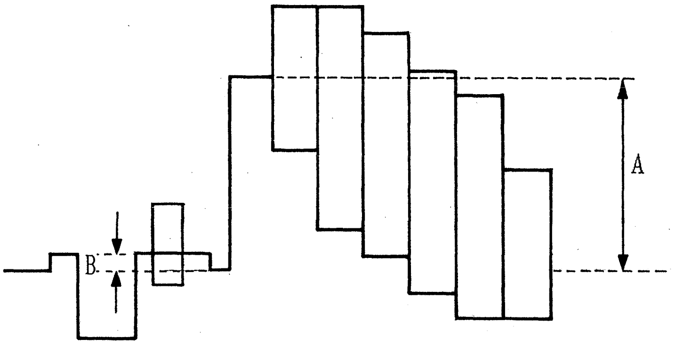

⊘ VR501 A = 0.7 ± 0.007Vp-p
⊘ VR502 B = 0 ± 5mV (DC)

9-14. BURST ADJUSTMENT (FOR AU-65/63/62 NTSC & PAL)

(W2 ENCODER)

TEST POINT	MODE	TAPE USED	M.EQ.	INPUT SIGNAL	ADJUSTMENT
VIDEO 2 OUT	E-E (EJECT)	-----	OSCILLOSCOPE	COMPONENT 100% COLOR BAR	VR510 (BF ϕ) VR511 (BF. WID)

NTSC SPECIFICATIONS

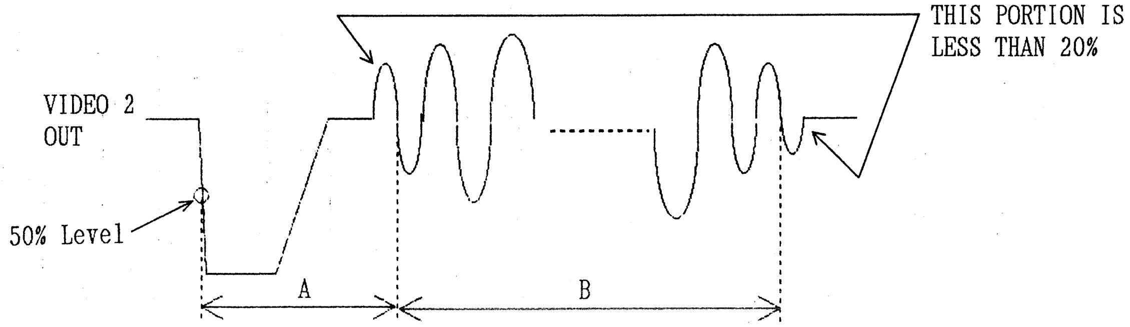
THIS PORTION IS LESS THAN 20%
VIDEO 2 OUT
50% Level
A
B

VIDEO 2 OUT THIS PORTION IS LESS THAN 20%

BURST POSITION : A = 5.3 ± 0.1μsec.
(⊘ VR510)

BURST WIDTH : B = 9 ± 1 cycle
(⊘ VR511) (2.51 ± 0.29μsec).

PAL SPECIFICATIONS

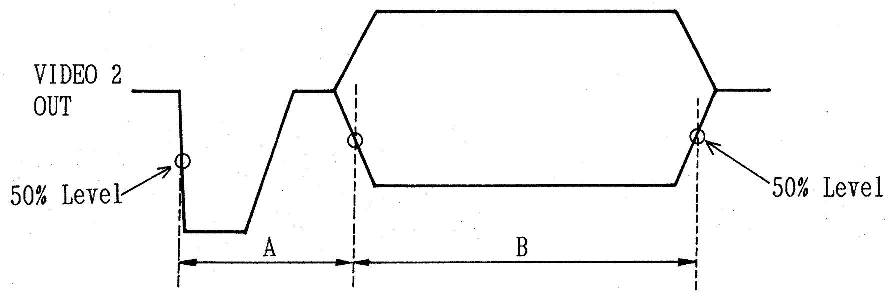
VIDEO 2 OUT
50% Level
50% Level
A
B

BURST POSITION : A = 5.6 ± 0.1μsec.
(⊘ VR510)

BURST WIDTH : B = 2.25 ± 0.23μsec.
(⊘ VR511)

9-15. VIDEO BURST LEVEL ADJUSTMENT (FOR AU-65/63/62 NTSC & PAL)

(W2 ENCODER)

TEST POINT	MODE	TAPE USED	M.EQ.	INPUT SIGNAL	ADJUSTMENT
VIDEO 2 OUT	E-E (EJECT)	-----	OSCILLOSCOPE (with 75Ω terminator)	---------	VR513 (V1. BURST. G) VR512 (BURST BAL)

1. Adjust VR513 so that the burst level (A) is
   NTSC 0.286 ± 0.004Vp-p
   PAL 0.3 ± 0.004Vp-p

2. Adjust VR512 so that the carrier leak is nulled.

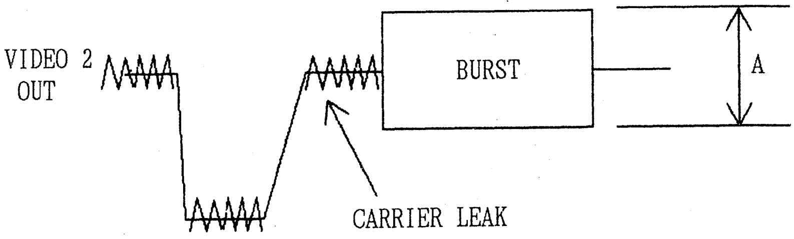

BURST LEVEL (⊘ VR513) : NTSC A = 0.286 ± 0.004Vp-p
PAL A = 0.3 ± 0.004Vp-p

CARRIER LEAK (⊘ VR512) → NULLED (less than 3mVp-p)

9-16. CARRIER LEAKAGE ADJUSTMENT (FOR AU-65/63/62 NTSC & PAL)

(W2 ENCODER)

TEST POINT	MODE	TAPE USED	M.EQ.	INPUT SIGNAL	ADJUSTMENT
VIDEO 2 OUT	PLAY	ALIGNMENT TAPE COLOR BAR	OSCILLOSCOPE (with 75Ω terminator)	---------	VR505 (PB BAL) VR506 (PR BAL)

1. Adjust VR505 and VR506 so that the carrier leakage of the white portion is nulled.

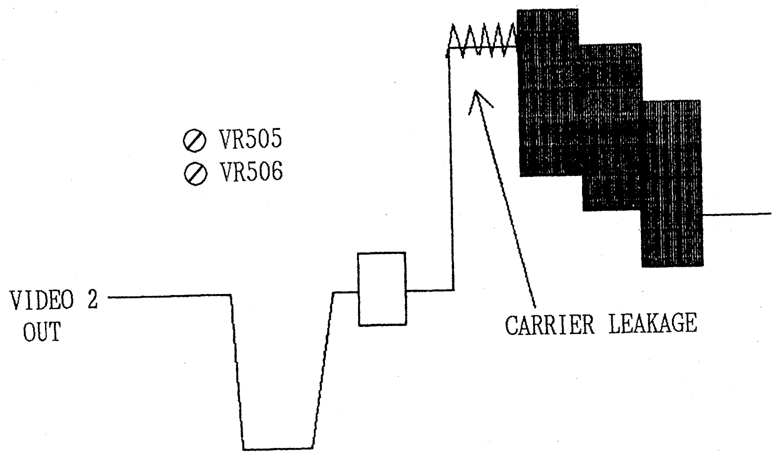

SPEC : CARRIER LEAKAGE IS LESS THAN 3mVp-p

2. If it is not, check the C A/D PEDESTAL VOLTAGE ADJ. (9-3)

9-17. VIDEO OUTPUT VECTOR ADJUSTMENT (FOR AU-65/63/62 NTSC & PAL)

(W2 ENCODER)

TEST POINT	MODE	TAPE USED	M.EQ.	INPUT SIGNAL	ADJUSTMENT
VIDEO 2 OUT	PLAY	ALIGNMENT COLOR BAR (NTSC 75%) (PAL 100%)	VECTOR SCOPE (or TEK 1750)	---------	VR209 (UV BAL) VR507 (VIDEO. CG) VR515 (HUE. OFS1) VR516 (QUAD) VR517 (HUE. OFS2)

Step 1.
MACHINE CONDITION

Refer to SET UP Conditions at the beginning of this SECTION (ENCODER - W2).

Step 2. [NTSC]

1. VR517 : SET TO CENTER POSITION (FOR USER VR)
2. Adjust VR209/VR507/VR515/VR516 so that each of the vectors phase and levels are in the 2% Box of the vector scope.

VIDEO OUT 2

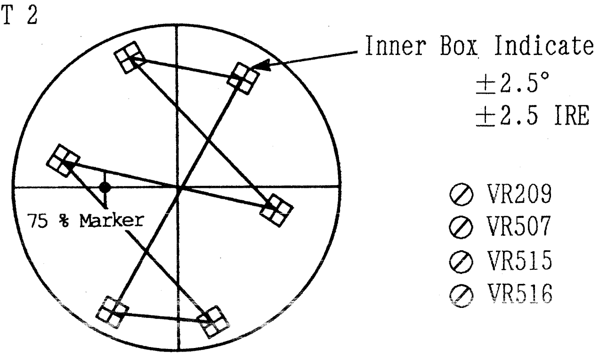

[NTSC]

Step 2. [PAL]

1. VR517 : CENTER POSITION (FOR USER VR)
2. Adjust VR209/VR507/VR515/VR516 so that each of the vectors phase and levels are in the 2% Box of the vector scope.

VIDEO OUT 2

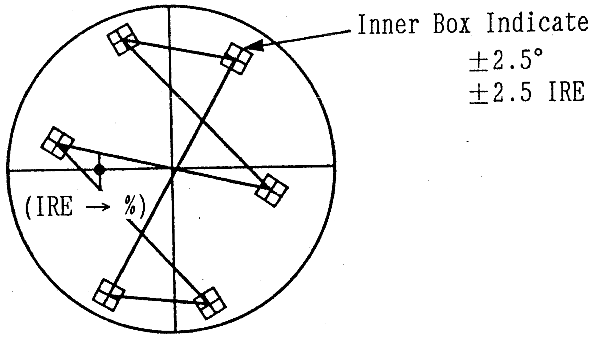

[PAL]

9-18. COMPONENT Y/C TIMING ADJUSTMENT (FOR AU-65/63/62 NTSC & PAL)

(W2 ENCODER)

TEST POINT	MODE	TAPE USED	M.EQ.	INPUT SIGNAL	ADJUSTMENT
COMPONENT Y OUT Pr OUT	PLAY	ALIGNMENT TAPE COLOR BAR	OSCILLOSCOPE OR W.F.M.	---------	VR213 (Y/Pr) Y/C TIMING PRESET VR (on Front Sub Panel) Y/C TIMING MANUAL VR (on Front Sub Panel)

Step 1.

1. Set the Y/C DELAY SW on the Front Sub Panel to MANUAL mode.

2. SCOPE CH1 : COMPONENT Y OUT (Ref.)
   SCOPE CH2 : COMPONENT Pb OUT

3. Adjust VR211 so that center of range which be able to be control by Y/C DELAY MANUAL VR, is Y/Pb timing 0sec. point.

4. Set the Y/C DELAY SW on the Front Sub Panel to PRESET mode.

5. Adjust the Y/C DELAY PRESET VR on the Front Sub Panel so that Y/Pb timing is 0 ± 10nsec.

6. SCOPE CH1 : COMPONENT Y OUT (Ref.)
   SCOPE CH2 : COMPONENT Pr OUT

7. Adjust VR213 so that Y/Pr timing is 0 ± 10nsec.

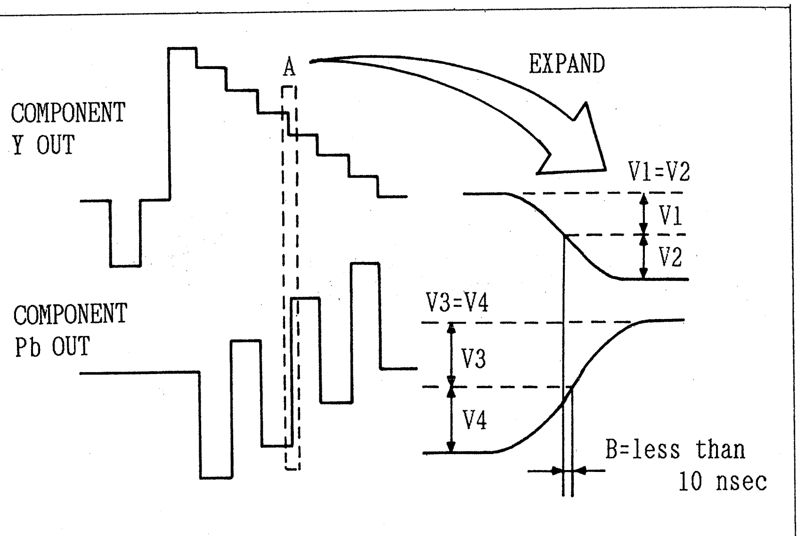
A
EXPAND
COMPONENT
Y OUT
V1=V2
V1
V2
COMPONENT
Pb OUT
V3=V4
V3
V4
B=less than
10 nsec

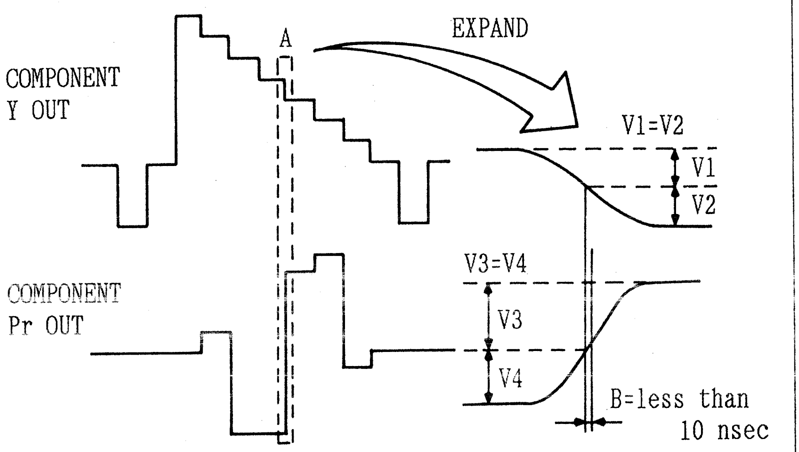
A
EXPAND
COMPONENT
Y OUT
V1=V2
V1
V2
COMPONENT
Pr OUT
V3=V4
V3
V4
B=less than
10 nsec

9-19. COMPOSITE Y/C TIMING ADJUSTMENT (FOR AU-65/63/62 NTSC & PAL)

(W2 ENCODER)

TEST POINT	MODE	TAPE USED	M.EQ.	INPUT SIGNAL	ADJUSTMENT
VIDEO 2 OUT	PLAY	ALIGNMENT TAPE PULSE & BAR (Y/C TIMING)	WAVEFORM MONITOR	---------	VR207 (Y/U) VR208 (Y/V)

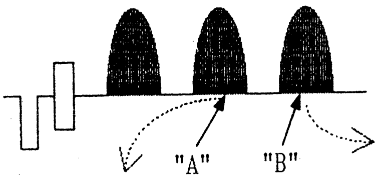

Adjust VR207 so the "B" portion is flat

Adjust VR208 so the "A" portion is flat

9-20. VIDEO 1 OUTPUT LEVEL CONFIRMATION (FOR AU-65/63/62 NTSC & PAL)

(W2 ENCODER)

TEST POINT	MODE	TAPE USED	M.EQ.	INPUT SIGNAL	ADJUSTMENT
VIDEO 1 OUT	PLAY	ALIGNMENT TAPE COLOR BAR (NTSC 75%) (PAL 100%)	OSCILLOSCOPE (with 75Ω termination)	---------	VR210 (SYNC G.) VR501 (VIDEO G.) VR513 (BURST G.)

Step 1. MACHINE CONDITION	Refer to SET UP Conditions at the beginning of this SECTION (ENCODER - W2).
Step 2. [NTSC] 1. Confirm the following specifications. [NTSC] 1) VIDEO LEVEL (A) = 0.714 ± 0.01Vp-p 2) SYNC LEVEL (B) = 0.286 ± 0.004Vp-p 3) BURST LEVEL (C) = 0.286 ± 0.004Vp-p 2. If it is not within specification, readjust VR210, VR501, VR513 (9-6 COMPOSITE SYNC LEVEL, 9-13 VIDEO 2 OUTPUT LEVEL, 9-15 VIDEO BURST LEVEL.)	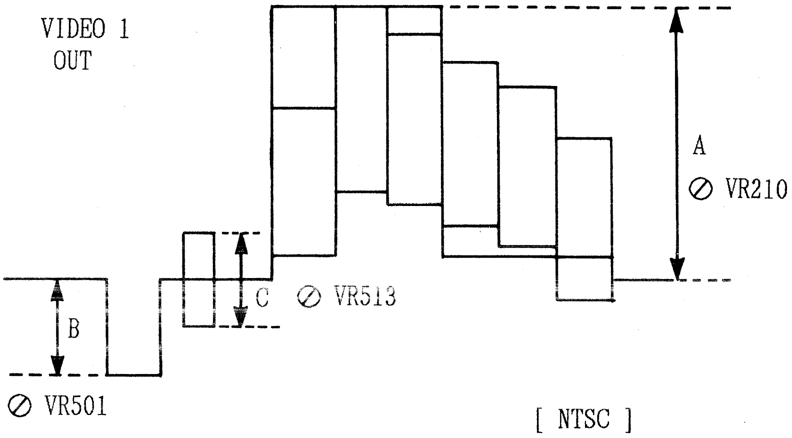 VIDEO 1 OUT A ⊘ VR210 C ⊘ VR513 B ⊘ VR501 [NTSC]
Step 2. [PAL] 1. Confirm the following specifications. [PAL] 1) VIDEO LEVEL (A) = 0.7 ± 0.01Vp-p 2) SYNC LEVEL (B) = 0.3 ± 0.006Vp-p 3) BURST LEVEL (C) = 0.3 ± 0.004Vp-p 2. If it is not within specification, readjust VR210, VR501, VR513 (9-6 COMPOSITE SYNC LEVEL, 9-13 VIDEO 2 OUTPUT LEVEL, 9-15 VIDEO BURST LEVEL.)	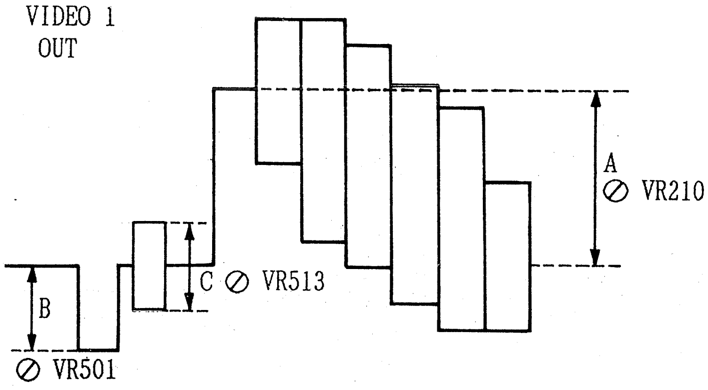 [PAL]

9-21. Y/C OUT VECTOR ADJUSTMENT (1)
(FOR AU-65/63/62 NTSC & PAL)

(W2 ENCODER)

TEST POINT	MODE	TAPE USED	M.EQ.	INPUT SIGNAL	ADJUSTMENT
Y/C OUT (S-VIDEO)	PLAY	ALIGNMENT COLOR BAR (NTSC 75%) (PAL 100%)	VECTOR SCOPE	---------	VR508 (Y/C C. PHASE) VR509 (Y/C C. G)

Step 1. [CONNECTION]

1. Please use S-Video to BNC Conversion CONNECTOR (4P→BNC).
2. Connect the vector scope to Y & C Output through the conversion cable as shown in figure.

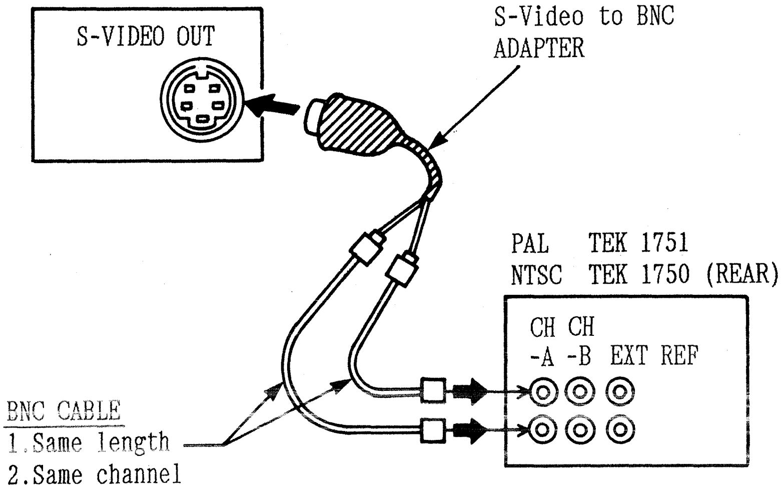
S-VIDEO OUT
S-Video to BNC ADAPTER
PAL TEK 1751
NTSC TEK 1750 (REAR)
CH -A
CH -B
EXT REF
BNC CABLE
1.Same length
2.Same channel

Step 2. [NTSC]

1. Adjust VR508 and VR509 so that the each vector is within the 2% box on the vector scope.

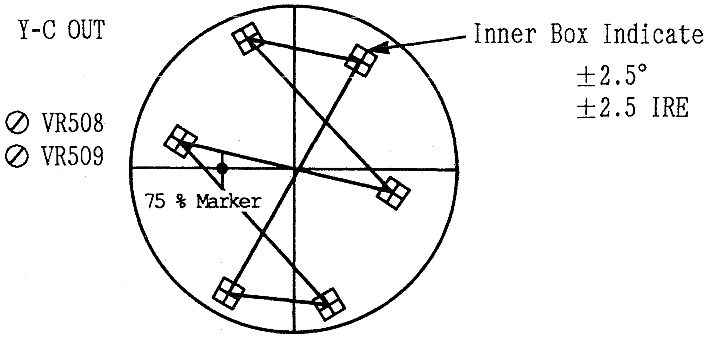
Y-C OUT
⊘ VR508
⊘ VR509
Inner Box Indicate
±2.5°
±2.5 IRE
75 % Marker

[NTSC]

Step 2. [PAL]

1. Connect the vector scope to signal generator, and set the vector scope the burst level 100%
2. Reconnect the vector scope to S-VIDEO OUT on the Rear Panel. (Refer to Step 1.)
3. Adjust VR508 and VR509 so that the each vector is within the 2% box on the vector scope.

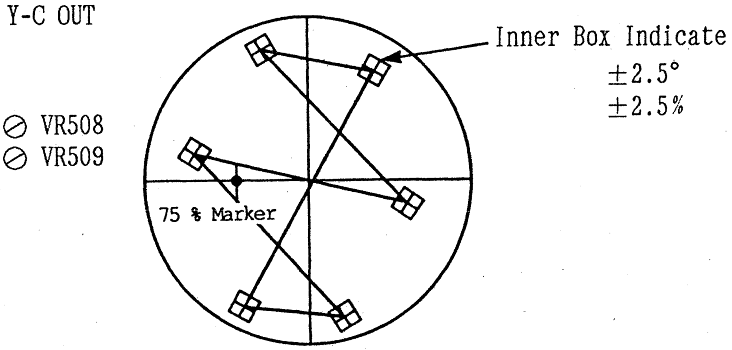
Y-C OUT
⊘ VR508
⊘ VR509
Inner Box Indicate
±2.5°
±2.5%
75 % Marker

[PAL]

9-22. Y/C OUT VECTOR ADJUSTMENT (2)
(FOR AU-65/63/62 NTSC & PAL)

(W2 ENCODER)

TEST POINT	MODE	TAPE USED	M.EQ.	INPUT SIGNAL	ADJUSTMENT
Y/C OUT	PLAY	ALIGNMENT COLOR BAR (NTSC 75%) (PAL 100%)	OSCILLOSCOPE (with 75Ω terminator)	---------	VR514 (Y/C BURST. G)
NTSC : BURST LEVEL = 0.286 ± 0.004Vp-p PAL : BURST LEVEL = 0.3 ± 0.004Vp-p					

9-23. VIDEO OUTPUT FREQUENCY RESPONSE ADJUSTMENT
(FOR AU-65/63/62 NTSC & PAL)

(W2 ENCODER)

TEST POINT	MODE	TAPE USED	M.EQ.	INPUT SIGNAL	ADJUSTMENT
TP502 TP 1	PLAY	ALIGNMENT TAPE SWEEP	OSCILLOSCOPE	---------	VC501 (VIDEO F.R.)

Step 1. MACHINE CONDITION	1. Refer to SET UP Conditions at the beginning of this SECTION (ENCODER - W2). 2. Connect a jumper wire between F15A (card edge) and GND to cut chroma signal.
Step 2. [NTSC] 1. SCOPE CH1 : TP 1 (Ref.) SCOPE CH2 : TP502 2. Adjust VC501 so that the frequency response at TP502 is the same as it at TP1.	⊘ VC501 SPECIFICATION [NTSC] TP502 = TP1 Frequency Characteristic is same. (0.5MHz = 100%) (4MHz = 100% ± 2%)
Step 2. [PAL] 1. SCOPE CH1 : TP 1 (Ref.) SCOPE CH2 : TP502 2. Adjust VC501 so that the frequency response at TP502 is the same as it at TP1.	⊘ VC501 SPECIFICATION [PAL] TP502 = TP1 Frequency Characteristic is same. (0.5MHz = 100%) (4MHz = 100% ± 3%)

9-24. Y OUTPUT FREQUENCY RESPONSE ADJUSTMENT (FOR AU-65/63/62 NTSC & PAL)

(W2 ENCODER)

TEST POINT	MODE	TAPE USED	M.EQ.	INPUT SIGNAL	ADJUSTMENT
TP202 TP 1	PLAY	ALIGNMENT TAPE SWEEP	OSCILLOSCOPE	---------	VC201 (Y FREQ. RES.)

Step 1. [NTSC]

1. SCOPE CH1 : TP 1 (Ref.)
   SCOPE CH2 : TP202
2. Adjust VC201 so that the frequency response at TP502 is the same as it at TP1.

⊘ VC201

SPECIFICATION [NTSC]
TP202 = TP1
Frequency Characteristic is same.
(0.5MHz = 100%)
(4MHz = 100% ± 2%)

Step 1. [PAL]

1. SCOPE CH1 : TP 1 (Ref.)
   SCOPE CH2 : TP202
2. Adjust VC201 so that the frequency response at TP502 is the same as it at TP1.

⊘ VC201

SPECIFICATION [PAL]
TP202 = TP1
Frequency Characteristic is same.
(0.5MHz = 100%)
(4MHz = 100% ± 3%)

9-25. SUPER IMPOSE CHARACTER LEVEL ADJUSTMENT (FOR AU-65/63/62 NTSC & PAL)

(W2 ENCODER)

TEST POINT	MODE	TAPE USED	M.EQ.	INPUT SIGNAL	ADJUSTMENT
TP503	PLAY	ALIGNMENT TAPE COLOR BAR	OSCILLOSCOPE (with 75Ω terminator)	---------	VR504 (V3 BLK. DC.)

Step 1.

1. SCOPE : TP503
2. Check that the Character Level "A" is 1.14 ± 0.1Vp-p as shown.
3. Adjust VR504 so that the DC level of Character is same as DC level of H. Blanking.

TP503

⊘ VR504

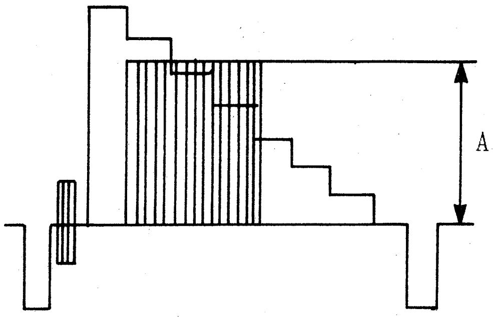

10. TBC & SYNC GEN (W1) BOARD (2/2)

TBC & SYNC GEN. SECTION (2/2) (W1) FLOWCHART FOR AU-65

* BEFORE ADJUSTMENT
The adjustment with this comment is necessary to adjust after the following adjustments are completed.

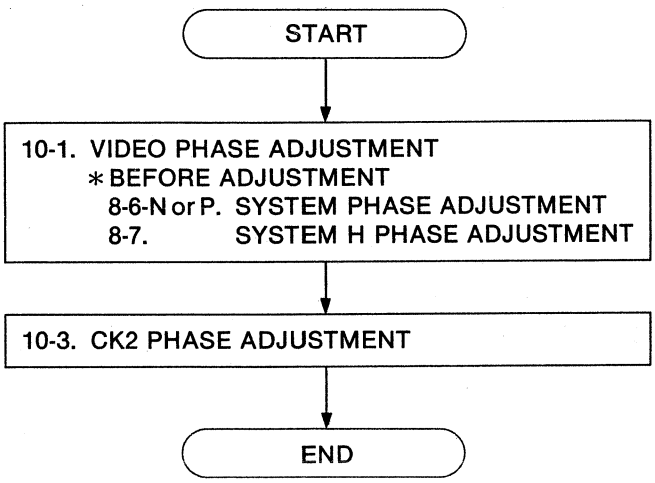
START
10-1. VIDEO PHASE ADJUSTMENT
* BEFORE ADJUSTMENT
8-6-N or P. SYSTEM PHASE ADJUSTMENT
8-7. SYSTEM H PHASE ADJUSTMENT
10-3. CK2 PHASE ADJUSTMENT
END

TBC & SYNC GEN. SECTION (2/2) (W1) FLOWCHART FOR AU-63 AND AU-62

* BEFORE ADJUSTMENT
The adjustment with this comment is necessary to adjust after the following adjustments are completed.

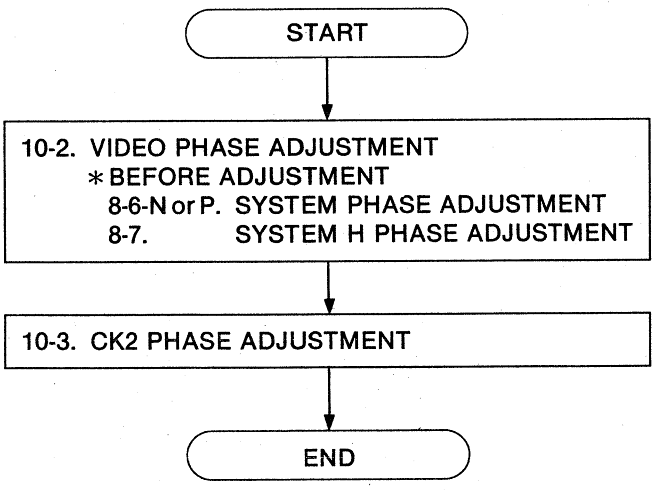
START
10-2. VIDEO PHASE ADJUSTMENT
* BEFORE ADJUSTMENT
8-6-N or P. SYSTEM PHASE ADJUSTMENT
8-7. SYSTEM H PHASE ADJUSTMENT
10-3. CK2 PHASE ADJUSTMENT
END

10. TBC & SYNC GEN (W1) BOARD (2/2)

10-1. VIDEO PHASE ADJUSTMENT (FOR AU-65 NTSC & PAL)

TEST POINT	MODE	TAPE USED	M.EQ.	INPUT SIGNAL	ADJUSTMENT
VIDEO 2 OUT	E-E (EJECT)	------	SCH METER (NTSC TEK 1750) (PAL TEK 1751)	LINE IN	SW203 (V. PHASE COARSE) VR207 (V. PHASE FINE)

Step 1.

CONNECTION METHOD

SCH METER TRIGGER : EXT

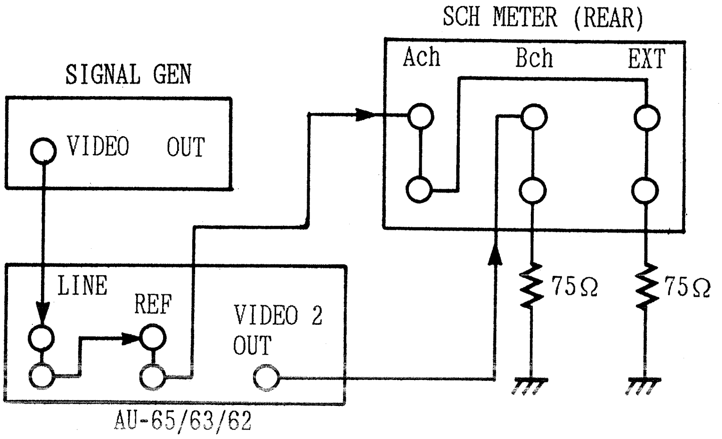
SCH METER (REAR)
Ach
Bch
EXT
SIGNAL GEN
VIDEO OUT
LINE
REF
VIDEO 2 OUT
75Ω
75Ω
AU-65/63/62

Step 2.

1. Confirm the SYSTEM PHASE Adjustments in TBC & SYNC GEN (W1) 1/2 section.

Step 3.

1. Confirm that the VIDEO phase of VIDEO 2 OUTPUT (B ch of WFM Monitor) is same as VIDEO phase of REF. VIDEO (A ch of WFM Monitor).
2. If it is not, adjust SW203 and VR207 so that the VIDEO phase of VIDEO 2 OUTPUT (Bch of WFM Monitor) and the REF. VIDEO (A ch of WFM Monitor) are the same phase as shown.

Note:
Don't check (A) portion, because this edge is mode by blanking circuit.
So, check other portion.

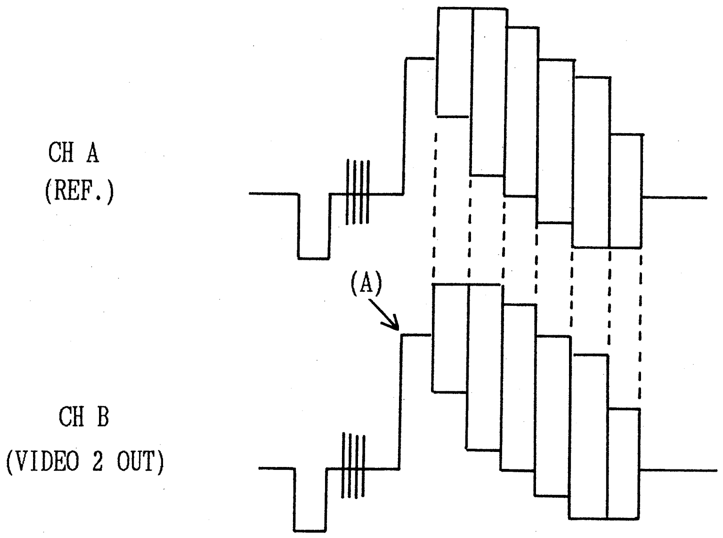
CH A
(REF.)
(A)
CH B
(VIDEO 2 OUT)

10-2. VIDEO PHASE ADJUSTMENT (FOR AU-63/62 NTSC & PAL)

TEST POINT	MODE	TAPE USED	M.EQ.	INPUT SIGNAL	ADJUSTMENT
VIDEO 2 OUT	PLAY	ALIGNMENT TAPE COLOR BAR	SCH METER (NTSC TEK 1750) (PAL TEK 1751)	SCH ADJ. FIXTURE TO REF. IN	SW203 (V. PHASE COARSE) VR207 (V. PHASE FINE)

Step 1.

CONNECTION METHOD

SCH METER TRIGGER : EXT

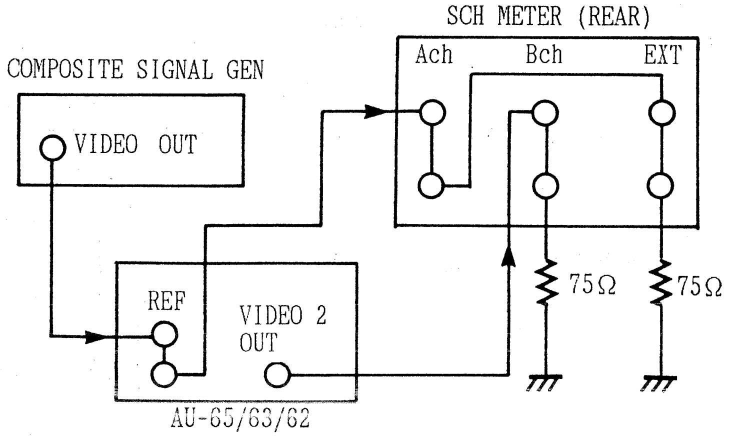
SCH METER (REAR)
Ach
Bch
EXT
COMPOSITE SIGNAL GEN
VIDEO OUT
REF
VIDEO 2 OUT
75Ω
75Ω
AU-65/63/62

Step 2.

1. Confirm the SYSTEM PHASE Adjustments in TBC & SYNC GEN (W1) 1/2 section.

Step 3.

1. Confirm that the VIDEO phase of VIDEO 2 OUTPUT (B ch of WFM Monitor) is same as VIDEO phase of REF. VIDEO (A ch of WFM Monitor).
2. If it is not, adjust SW203 and VR207 so that the VIDEO phase of VIDEO 2 OUTPUT (Bch of WFM Monitor) and the REF. VIDEO (A ch of WFM Monitor) are the same phase as shown.

Note:
1. Don't check (A) portion, because this edge is made by blacking circuit. So, check other portion.
2. If the VIDEO phase is not same perfectly, adjust the average is the same.

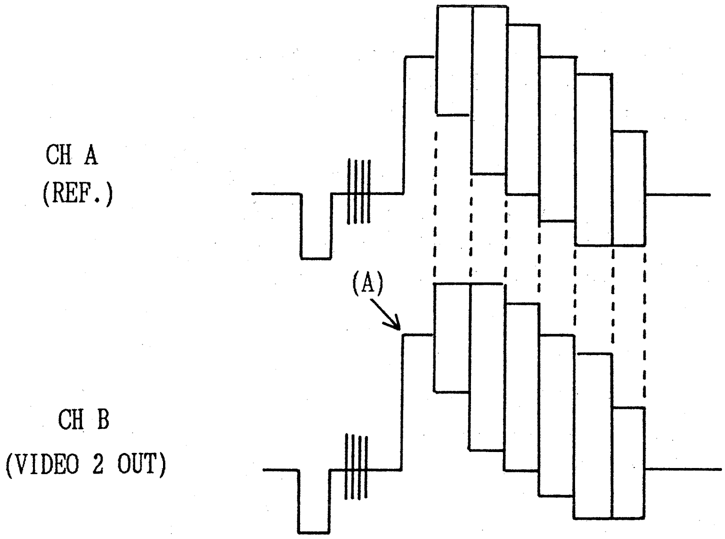
CH A
(REF.)
(A)
CH B
(VIDEO 2 OUT)

10-3. CK 2 PHASE ADJUSTMENT
(FOR AU-65/63/62 NTSC & PAL)

(W1 TBC & SYNC GEN)

TEST POINT	MODE	TAPE USED	M.EQ.	INPUT SIGNAL	ADJUSTMENT
VIDEO 2 OUT	PLAY	ALIGNMENT TAPE VISC	VECTOR SCOPE	---------	VR207 (CK2 PHASE)

Step 1.

MACHINE CONDITION

SW7 (on W1) : OFF

Step 2.

CONNECTION METHOD

SCH METER TRIGGER : EXT

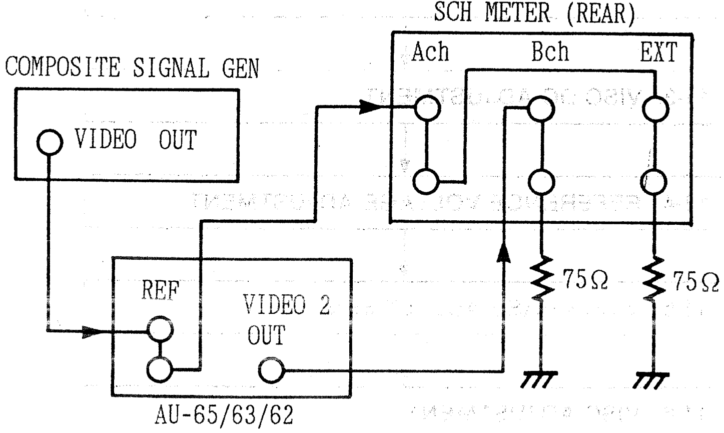
SCH METER (REAR)
Ach
Bch
EXT
COMPOSITE SIGNAL GEN
VIDEO OUT
75Ω
75Ω
REF
VIDEO 2 OUT
AU-65/63/62

Step 3.

1. Adjust VR207 so that the VISC signal phase is center of Burst axis. (0° ±2°)
2. SW7 : ON

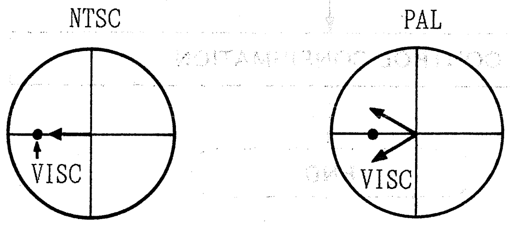
NTSC
VISC
PAL
VISC

11. ENCODER (W2) BOARD (2/2)
— VISC CONTROL SECTION (PAL ONLY) —

VISC CONTROL SECTION (2/2) (W2) FLOWCHART FOR AU-65, AU-63 AND AU-62, PAL MODEL

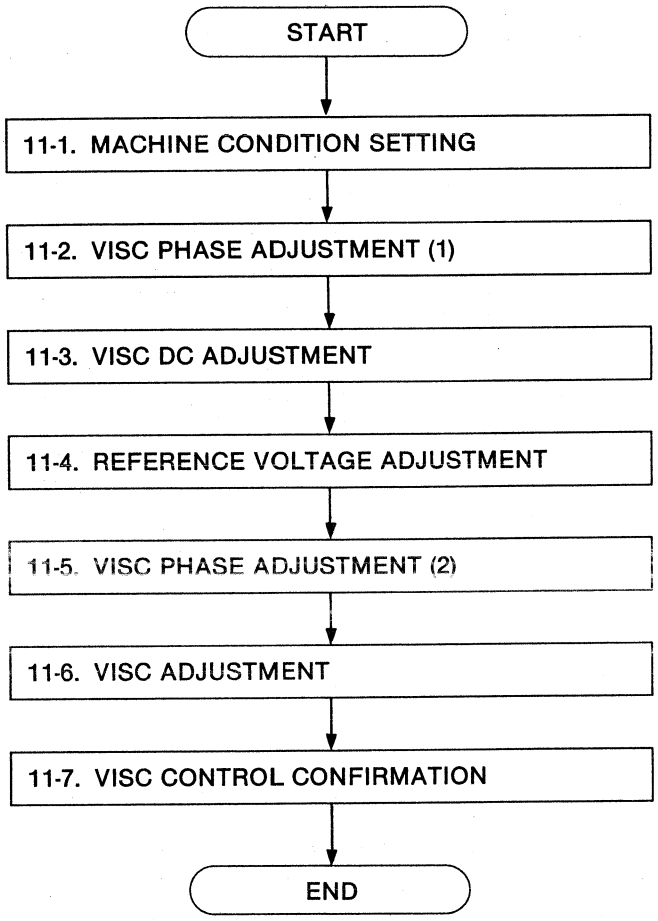
START
11-1. MACHINE CONDITION SETTING
11-2. VISC PHASE ADJUSTMENT (1)
11-3. VISC DC ADJUSTMENT
11-4. REFERENCE VOLTAGE ADJUSTMENT
11-5. VISC PHASE ADJUSTMENT (2)
11-6. VISC ADJUSTMENT
11-7. VISC CONTROL CONFIRMATION
END

∗This Section is PAL only. This Section have no connection with NTSC.

11. ENCODER (W2 BOARD (2/2)

— VISC CONTROL SECTION (PAL ONLY) —

11-1. MACHINE CONDITION SETTING (FOR AU-65/63/62 PAL)

1. CF SELECT SW (on Front Sub Panel) ---------------------- 8F
2. TAPE/EE SELECT (on Pull Out Drawer) ---------------------- EE
3. HEAD SELECT (on Pull Out Drawer) ---------------------- R/P
4. SYNC SELECT SW (on Front Sub Panel) ---------------------- AUTO
5. COMPONENT Y/Pr/Pb LEVEL VR (on Pull Out Drawer) --- DETENT POSITION
6. VIDEO LEVEL VR ---------------------------------- DETENT POSITION
7. SET UP LEVEL VR ---------------------------------- DETENT POSITION
8. CHROMA LEVEL VR ---------------------------------- DETENT POSITION
9. HUE VR ---------------------------------- DETENT POSITION

11-2. VISC PHASE ADJUSTMENT (1) (FOR AU-65/63/62 PAL)

(W2 ENCODER)

TEST POINT	MODE	TAPE USED	M.EQ.	INPUT SIGNAL	ADJUSTMENT
TP801 TP802	PLAY	ALIGNMENT TAPE VISC	VECTORSCOPE	---------	VR800 (VISC ϕ1)

Step 1. MACHINE CONDITION	SW800 (on W2) : OFF SW801 (on W2) : OFF
Step 2. CONNECTION METHOD	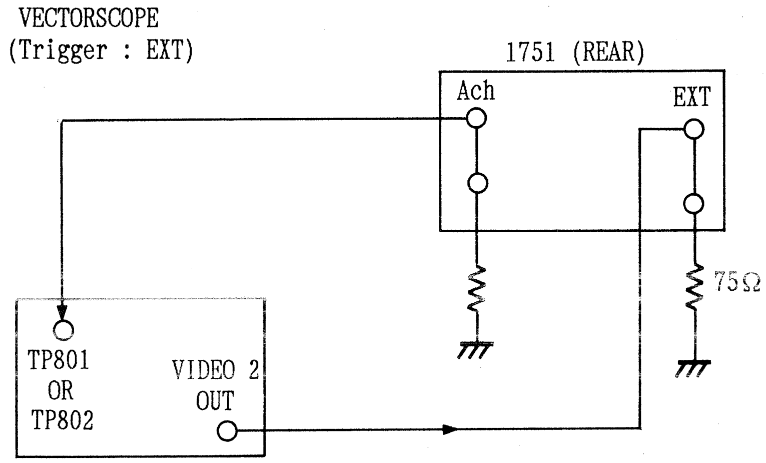 VECTORSCOPE (Trigger : EXT) 1751 (REAR) Ach EXT 75Ω TP801 OR TP802 VIDEO 2 OUT
Step 3. 1. Connect the vectorscope to TP801 and set the vectorscope to 12 o'clock position. 2. Connect the vectorscope to TP802 and adjust VR800 so that the phase at TP802 comes to 9 o'clock position.	VR800 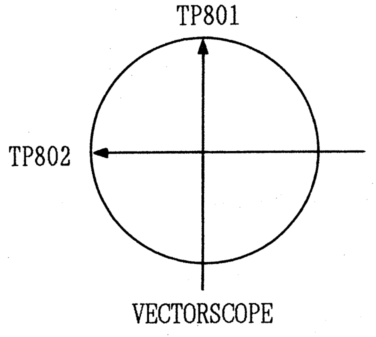 TP801 TP802 VECTORSCOPE

11-3. VISC DC ADJUSTMENT (FOR AU-65/63/62 PAL)

(W2 ENCODER)

TEST POINT	MODE	TAPE USED	M.EQ.	INPUT SIGNAL	ADJUSTMENT
TP803	PLAY	ALIGNMENT TAPE VISC	OSCILLOSCOPE	---------	VR802 (VISC. DC)
Step 1. MACHINE CONDITION			SW800 (on W2) : OFF SW801 (on W2) : OFF		
Step 2. SCOPE : TP803 1. Adjust VR802 so that the reading of DC voltage is 0 ± 0.005V.			⊘ VR802 SPECIFICATION : 0 ± 0.005V DC		

11-4. REFERENCE VOLTAGE ADJUSTMENT (FOR AU-65/63/62 PAL)

(W2 ENCODER)

TEST POINT	MODE	TAPE USED	M.EQ.	INPUT SIGNAL	ADJUSTMENT
SW801	PLAY	ALIGNMENT TAPE VISC	OSCILLOSCLPE AND VECTORSCOPE	---------	VR803 (REF. VOLT)
Step 1. MACHINE CONDITION			SW800 (on W2) : OFF		
Step 2. 1. Adjust VR803 so that the voltage in difference between leads of SW801 becomes 0 ± 0.005V. 2. Confirm that the phase of VISC is not changed even if the SW801 is on and off.			⊘ VR803 SPECIFICATION : 0 ± 0.005V DC		

11-5. VISC PHASE ADJUSTMENT (2)
(FOR AU-65/63/62 PAL)

(W2 ENCODER)

TEST POINT	MODE	TAPE USED	M.EQ.	INPUT SIGNAL	ADJUSTMENT
VIDEO 2 OUT	PLAY	ALIGNMENT TAPE VISC	VECTOR SCOPE	---------	VR801 (VISC. φ2)

Note:
Confirm the Adjustment of W1 and W2 (1/2), completeness.

Step 1.

MACHINE CONDITION

1. Refer to Machine Condition at the beginning of this section. (W2-ENCODER 2/2)
2. SW800 (on W2) → OFF
   SW801 (on W2) → ON
   SW 7 (on W1) → OFF

Step 2.

1. Check and mark VR207 on the W1 P.C.Board, and set so that the VISC phase is on the R-Y axis upper portion.

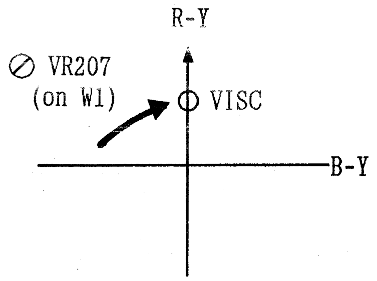

Step 3.

1. Observe the vector scope the VISC phase is pulled in the horizontal axis between the burst when SW800 is "ON" mode.
2. Check the moving speed of VISC with SW800 "ON".
   It has 2 pattern.

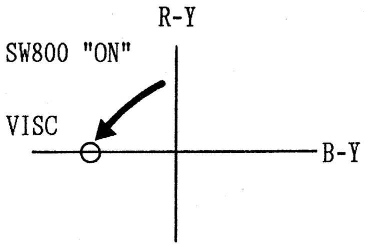

VISC MOVING PATTERN
(1) Pulling in VISC is slowly by Analog Control.
(2) Pulling in VISC is quick by Digital Control.

Step 4.

1. When VR801 is turned, changing point of moving pattern is appeared in range of VR801.

2. Adjust VR801 so that the VR position is changing point of VISC moving pattern.

Note:
In this adjustment, repeat SW800 "ON" and "OFF".

SW800 → ON

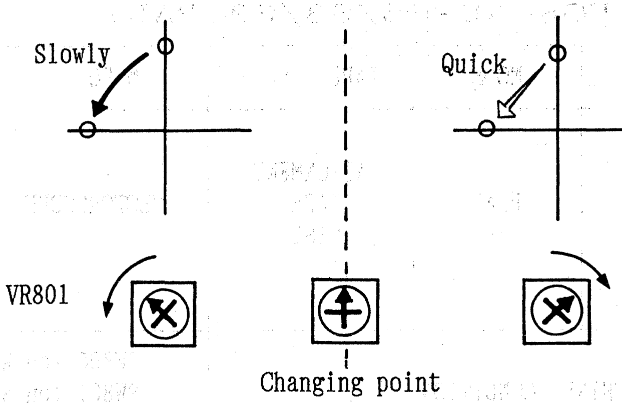
Slowly
Quick
VR801
Changing point

Step 5.

If the changing point of moving pattern is 2 in the range of VR801, adjust this procedure as following.

1. Set the VR801 (on W2) changing points of moving pattern.
2. Reset the VR207 on W1 P.C.Board so that VISC phase is 45°.
3. VR801 have 2 changing points (A) and (B) at VISC 90° condition. When VISC is 45° and SW800 is "ON", one is pulled in U axis slowly but another is quick it.
4. Adjustment position VR is changing point at VISC 90° and slowly pulling as VISC 45°.

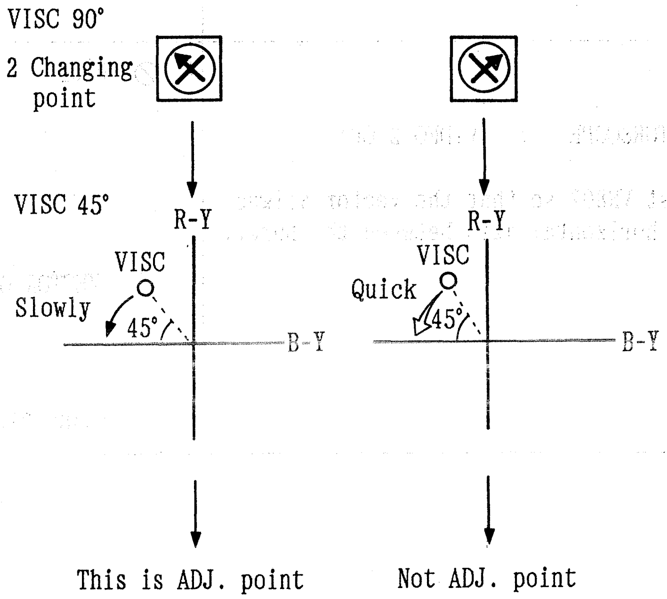
VISC 90°
2 Changing point
VISC 45°
R-Y
VISC
Slowly
45°
B-Y
R-Y
VISC
Quick
45°
B-Y
This is ADJ. point
Not ADJ. point

Step 6.

1. Set VR207 on W1 P.C.Board so that VISC phase is R-Y under side.
2. Confirm the function of VISC control is same of Step 3, 4 and 5.

Step 7.

1. After adjustment, set SW800 "OFF" mode.
2. Adjust VR207 on W1 P.C.Board so that the VISC signal is horizontal axis (B-Y) between the burst.

SW800 → OFF

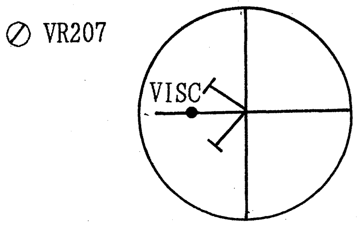

Step 8.

1. Reset SW800 "ON" mode.
2. Reset SW7 on W1 P.C.Board "ON" mode.

SW800 (on W2) → ON

SW 7 (on W1) → ON

11-6. VISC ADJUSTMENT
(FOR AU-65/63/62 PAL)

(W2 ENCODER)

TEST POINT	MODE	TAPE USED	M.EQ.	INPUT SIGNAL	ADJUSTMENT
VIDEO 2 OUT	PLAY	ALIGNMENT TAPE VISC	VECTORSCOPE	---------	VR802 (VISC. DC)

Step 1. MACHINE CONDITION	SW800 (on W2) : ON SW801 (on W2) : ON
Step 2. VECTORSCOPE : VIDEO 2 OUT 1. Adjust VR802 so that the vector aligns with horizontal axis between the burst.	⊘ VR802 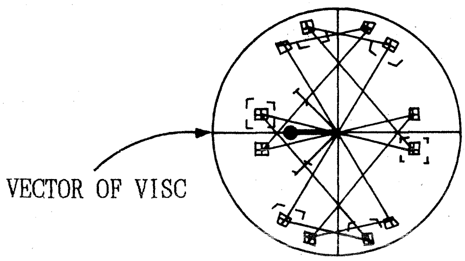 PHASE DIFFERENCE BTWEEN BURST AND VISC = 0 ± 5°

11-7. VISC CONTROL CONFIRMATION (FOR AU-65/63/62 PAL)

(W2 ENCODER)

TEST POINT	MODE	TAPE USED	M.EQ.	INPUT SIGNAL	ADJUSTMENT
VIDEO 2 OUT	PLAY	ALIGNMENT TAPE VISC	VECTOR SCOPE	---------	VR206 (on W1) (CK2 PHASE)

Step 1.
MACHINE CONDITION

SW800 (on W2) : OFF → ON
SW801 (on W2) : OFF → ON

Step 2.

CONNECTION METHOD

1. Set the SW800 to off and set the CK2 phase VR206 so that the VISC phase is -120° apart from burst phase. Then confirm that the VISC phase aligns to horizontal axis between the burst when turning SW800 on.
2. Next, set the SW801 to off and set the CK2 phase VR206 so that the VISC phase is +120° apart from burst phase. Then confirm that the VISC phase aligns to horizontal axis between the barst when turning SW800 on.
3. If it does not work correctly, repeat the CK2 phase adjustment (VR206).

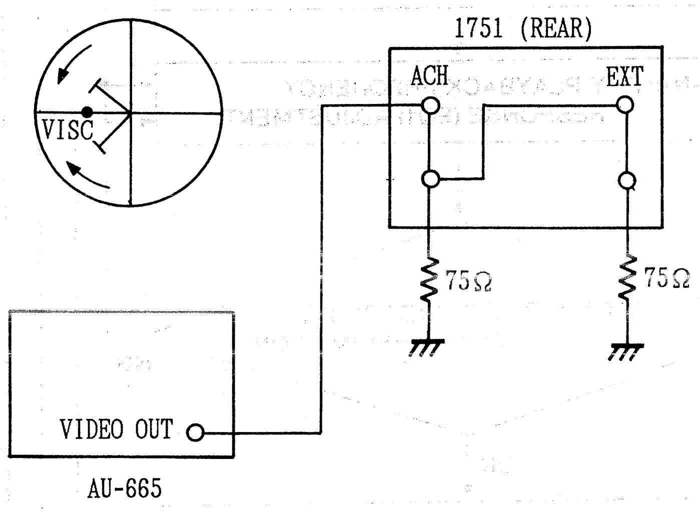

12. MODULATION & DEMODULATION (W3) BOARD (2/2)

MODULATION & DEMODULATION SECTION (2/2) (W3) FLOWCHART FOR AU-65

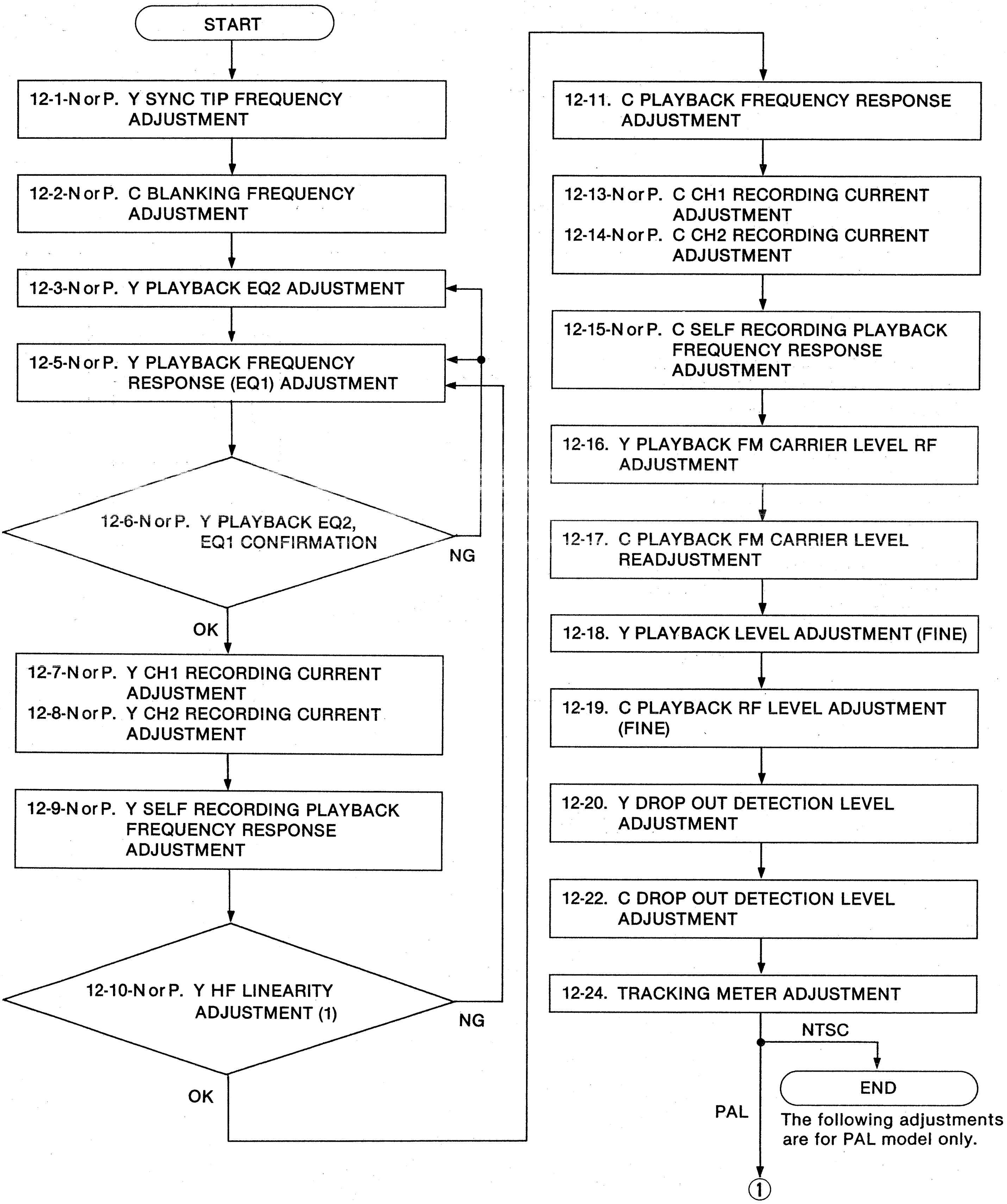

START
12-1-N or P. Y SYNC TIP FREQUENCY ADJUSTMENT
12-2-N or P. C BLANKING FREQUENCY ADJUSTMENT
12-3-N or P. Y PLAYBACK EQ2 ADJUSTMENT
12-5-N or P. Y PLAYBACK FREQUENCY RESPONSE (EQ1) ADJUSTMENT
12-6-N or P. Y PLAYBACK EQ2, EQ1 CONFIRMATION
NG
OK
12-7-N or P. Y CH1 RECORDING CURRENT ADJUSTMENT
12-8-N or P. Y CH2 RECORDING CURRENT ADJUSTMENT
12-9-N or P. Y SELF RECORDING PLAYBACK FREQUENCY RESPONSE ADJUSTMENT
12-10-N or P. Y HF LINEARITY ADJUSTMENT (1)
NG
OK
12-11. C PLAYBACK FREQUENCY RESPONSE ADJUSTMENT
12-13-N or P. C CH1 RECORDING CURRENT ADJUSTMENT
12-14-N or P. C CH2 RECORDING CURRENT ADJUSTMENT
12-15-N or P. C SELF RECORDING PLAYBACK FREQUENCY RESPONSE ADJUSTMENT
12-16. Y PLAYBACK FM CARRIER LEVEL RF ADJUSTMENT
12-17. C PLAYBACK FM CARRIER LEVEL READJUSTMENT
12-18. Y PLAYBACK LEVEL ADJUSTMENT (FINE)
12-19. C PLAYBACK RF LEVEL ADJUSTMENT (FINE)
12-20. Y DROP OUT DETECTION LEVEL ADJUSTMENT
12-22. C DROP OUT DETECTION LEVEL ADJUSTMENT
12-24. TRACKING METER ADJUSTMENT
NTSC
END
PAL
①

The following adjustments are for PAL model only.

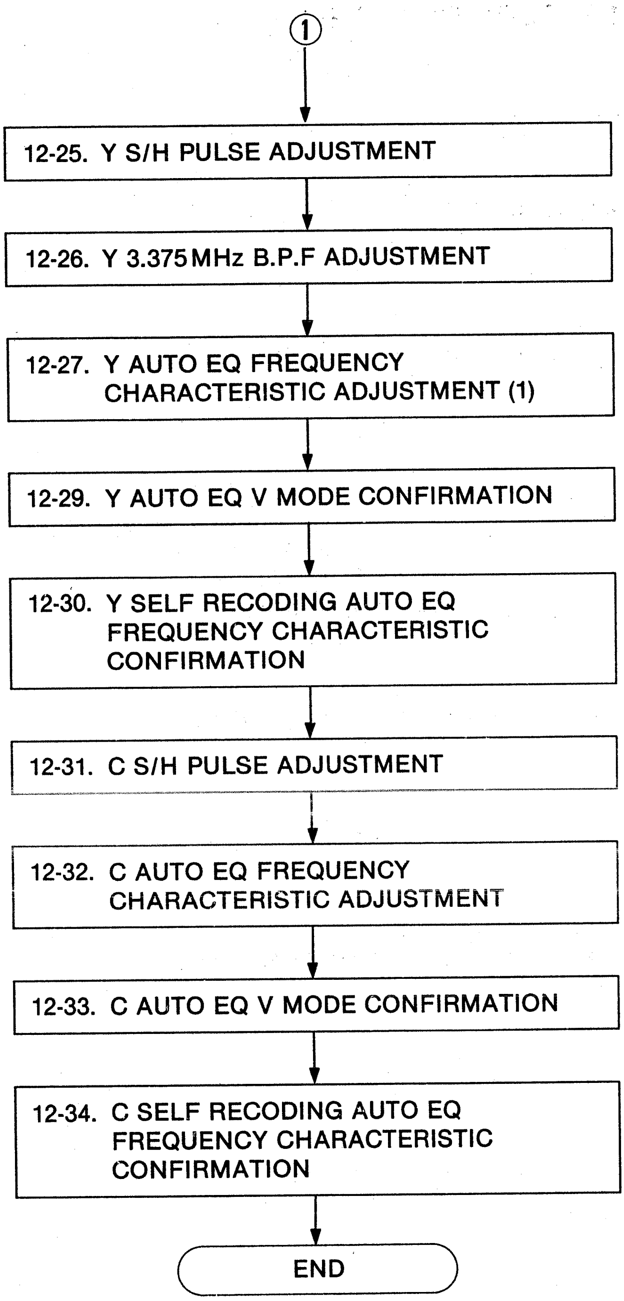
①
12-25. Y S/H PULSE ADJUSTMENT
12-26. Y 3.375 MHz B.P.F ADJUSTMENT
12-27. Y AUTO EQ FREQUENCY CHARACTERISTIC ADJUSTMENT (1)
12-29. Y AUTO EQ V MODE CONFIRMATION
12-30. Y SELF RECODING AUTO EQ FREQUENCY CHARACTERISTIC CONFIRMATION
12-31. C S/H PULSE ADJUSTMENT
12-32. C AUTO EQ FREQUENCY CHARACTERISTIC ADJUSTMENT
12-33. C AUTO EQ V MODE CONFIRMATION
12-34. C SELF RECODING AUTO EQ FREQUENCY CHARACTERISTIC CONFIRMATION
END

MODULATION & DEMODULATION SECTION (2/2) (W3) FLOWCHART FOR AU-63

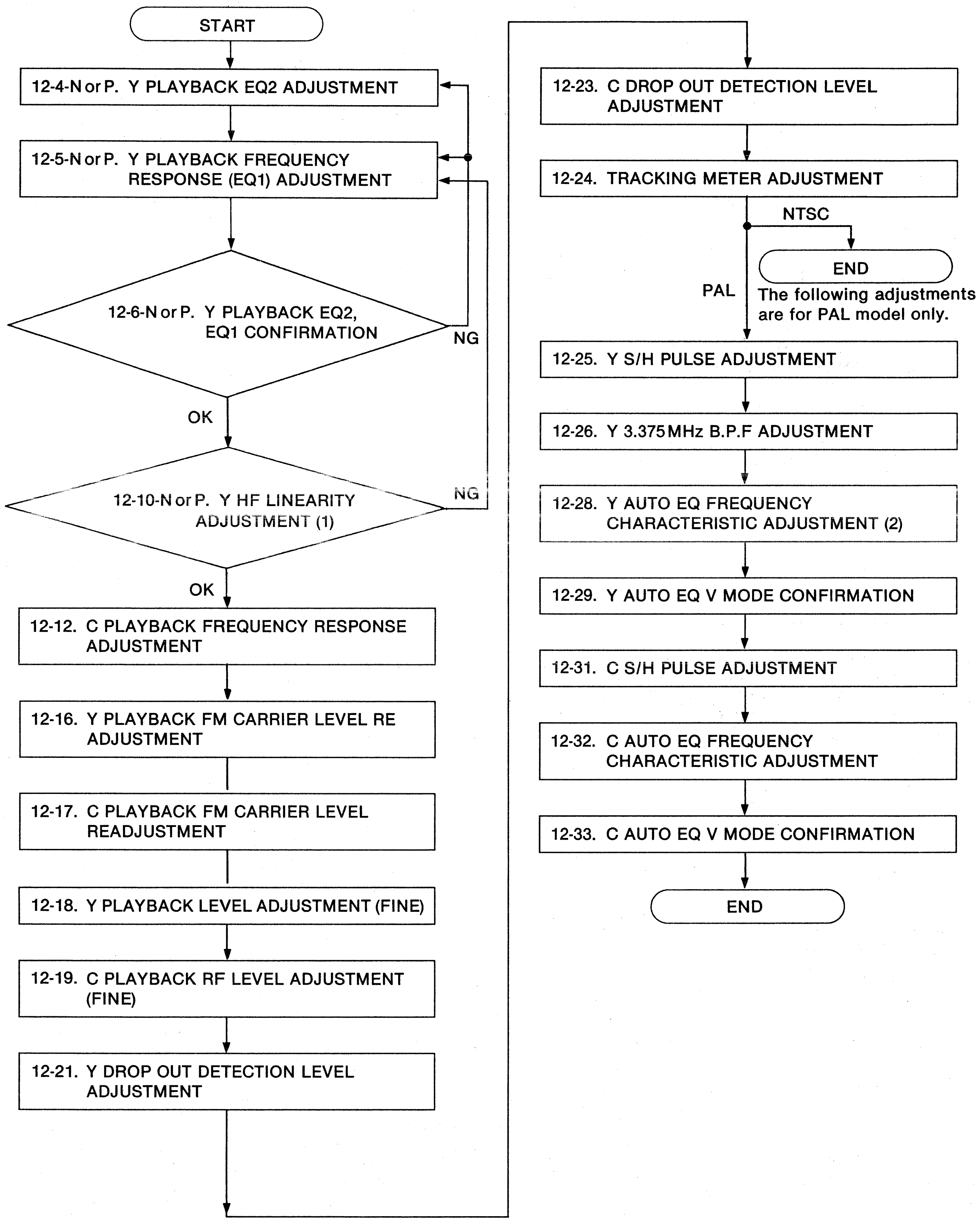
START
12-4-N or P. Y PLAYBACK EQ2 ADJUSTMENT
12-5-N or P. Y PLAYBACK FREQUENCY RESPONSE (EQ1) ADJUSTMENT
12-6-N or P. Y PLAYBACK EQ2, EQ1 CONFIRMATION
NG
OK
12-10-N or P. Y HF LINEARITY ADJUSTMENT (1)
NG
OK
12-12. C PLAYBACK FREQUENCY RESPONSE ADJUSTMENT
12-16. Y PLAYBACK FM CARRIER LEVEL RE ADJUSTMENT
12-17. C PLAYBACK FM CARRIER LEVEL READJUSTMENT
12-18. Y PLAYBACK LEVEL ADJUSTMENT (FINE)
12-19. C PLAYBACK RF LEVEL ADJUSTMENT (FINE)
12-21. Y DROP OUT DETECTION LEVEL ADJUSTMENT
12-23. C DROP OUT DETECTION LEVEL ADJUSTMENT
12-24. TRACKING METER ADJUSTMENT
NTSC
END
PAL
The following adjustments are for PAL model only.
12-25. Y S/H PULSE ADJUSTMENT
12-26. Y 3.375MHz B.P.F ADJUSTMENT
12-28. Y AUTO EQ FREQUENCY CHARACTERISTIC ADJUSTMENT (2)
12-29. Y AUTO EQ V MODE CONFIRMATION
12-31. C S/H PULSE ADJUSTMENT
12-32. C AUTO EQ FREQUENCY CHARACTERISTIC ADJUSTMENT
12-33. C AUTO EQ V MODE CONFIRMATION
END

MODULATION & DEMODULATION SECTION (2/2) (W3) FLOWCHART FOR AU-62

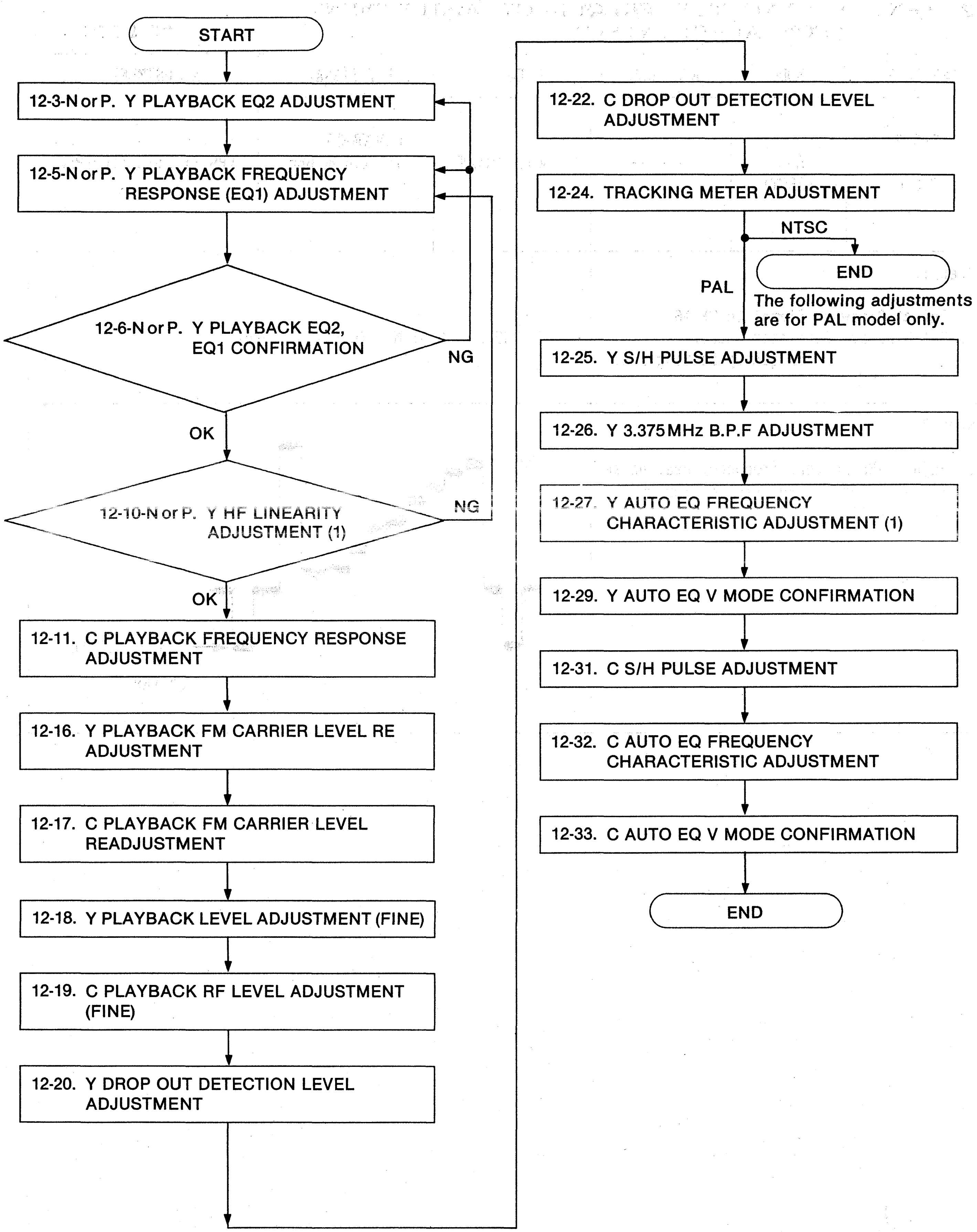
START
12-3-N or P. Y PLAYBACK EQ2 ADJUSTMENT
12-5-N or P. Y PLAYBACK FREQUENCY RESPONSE (EQ1) ADJUSTMENT
12-6-N or P. Y PLAYBACK EQ2, EQ1 CONFIRMATION
NG
OK
12-10-N or P. Y HF LINEARITY ADJUSTMENT (1)
NG
OK
12-11. C PLAYBACK FREQUENCY RESPONSE ADJUSTMENT
12-16. Y PLAYBACK FM CARRIER LEVEL RE ADJUSTMENT
12-17. C PLAYBACK FM CARRIER LEVEL READJUSTMENT
12-18. Y PLAYBACK LEVEL ADJUSTMENT (FINE)
12-19. C PLAYBACK RF LEVEL ADJUSTMENT (FINE)
12-20. Y DROP OUT DETECTION LEVEL ADJUSTMENT
12-22. C DROP OUT DETECTION LEVEL ADJUSTMENT
12-24. TRACKING METER ADJUSTMENT
NTSC
END
PAL
The following adjustments are for PAL model only.
12-25. Y S/H PULSE ADJUSTMENT
12-26. Y 3.375 MHz B.P.F ADJUSTMENT
12-27. Y AUTO EQ FREQUENCY CHARACTERISTIC ADJUSTMENT (1)
12-29. Y AUTO EQ V MODE CONFIRMATION
12-31. C S/H PULSE ADJUSTMENT
12-32. C AUTO EQ FREQUENCY CHARACTERISTIC ADJUSTMENT
12-33. C AUTO EQ V MODE CONFIRMATION
END

12. MODULATION & DEMODULATION (W3) BOARD (2/2)

12-1-N. Y SYNC TIP FREQUENCY ADJUSTMENT (FOR AU-65 NTSC)

(W3 MOD & DEMOD)

TEST POINT	MODE	TAPE USED	M.EQ.	INPUT SIGNAL	ADJUSTMENT
TP309 TP316	E-E (EJECT)	-------	OSCILLOSCOPE	COMPONENT 75% COLOR BAR	VR9 (Y SYNC TIP FREQ.)

Step 1. 1. Inject Sinewave Signal to TP316 2. Set Sinewave Generator Output Frequency Setting To :	5.6 MHz ± 0.01 MHz (0.2 ~ 0.4Vp-p)
Step 2. 1. Adjust VR9 so that frequency beat noise is nullified at sync tip portion as shown in figure.	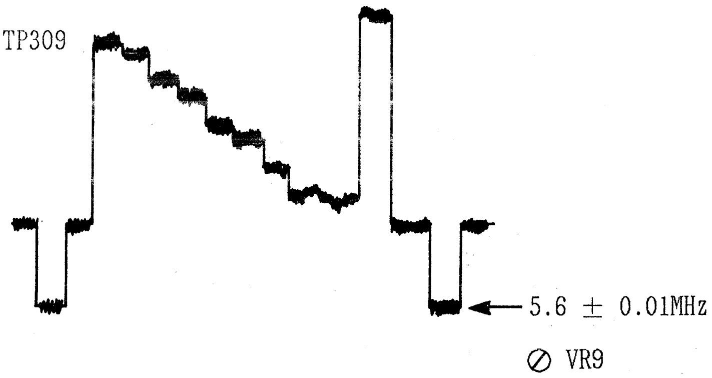

12-1-P. Y SYNC TIP FREQUENCY ADJUSTMENT (FOR AU-65 PAL)

(W3 MOD & DEMOD)

TEST POINT	MODE	TAPE USED	M.EQ.	INPUT SIGNAL	ADJUSTMENT
TP309 TP316	E-E (EJECT)	-------	OSCILLOSCOPE	COMPONENT COLOR BAR	VR9 (Y SYNC TIP FREQ.)

Step 1. 1. Inject Sinewave Signal to TP316 2. Set Sinewave Generator Output Frequency Setting To :	6.63 MHz ± 0.01 MHz (0.2 ~ 0.4Vp-p)
Step 2. 1. Adjust VR9 so that frequency beat noise is nullified at sync tip portion as shown in figure.	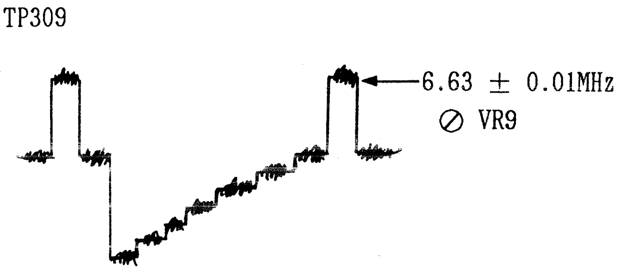

12-2-N. C BLANKING FREQUENCY ADJUSTMENT (FOR AU-65 NTSC)

(W3 MOD & DEMOD)

TEST POINT	MODE	TAPE USED	M.EQ.	INPUT SIGNAL	ADJUSTMENT
TP706 TP711	E-E (EJECT)	-------	OSCILLOSCOPE	Y/CTCM 75% COLOR BAR	VR206 (C BLK FREQ.)

Step 1. 1. Inject Sinewave Signal to TP711 2. Set Sinewave Generator Output Frequency Setting To :	4.8 MHz ± 0.01 MHz (0.2 ~0.4Vp-p)
Step 2. 1. SCOPE : TP706 2. Adjust VR206 so that frequency beat noise is nullified at cyan portion of Pr signal as shown in figure.	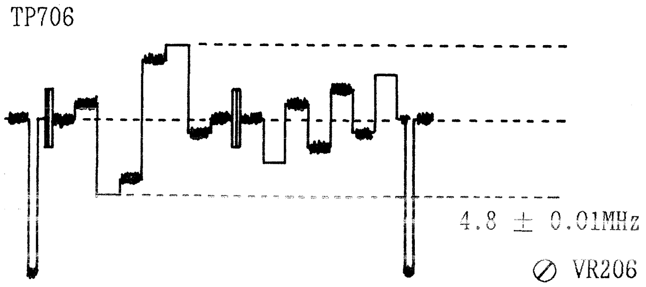

12-2-P. C BLANKING FREQUENCY ADJUSTMENT (FOR AU-65 PAL)

(W3 MOD & DEMOD)

TEST POINT	MODE	TAPE USED	M.EQ.	INPUT SIGNAL	ADJUSTMENT
TP706 TP711	E-E (EJECT)	-------	OSCILLOSCOPE	Y/CTCM COLOR BAR	VR206 (C BLK FREQ.)

Step 1. 1. Inject Sinewave Signal to TP711 2. Set Sinewave Generator Output Frequency Setting To :	5.4 MHz ± 0.01 MHz (0.2 ~0.4Vp-p)
Step 2. 1. SCOPE : TP706 2. Adjust VR206 so that frequency beat noise is nullified at cyan portion of Pr signal as shown in figure.	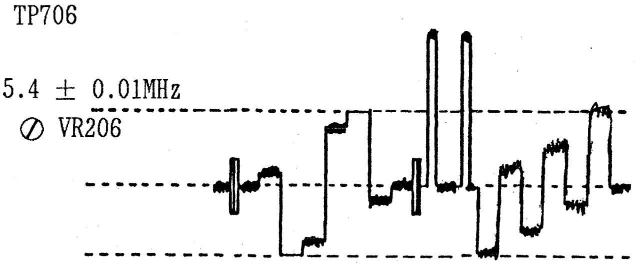

12-3-N. Y PLAYBACK EQ2 ADJUSTMENT (FOR AU-62/AU-65 NTSC)

(W3 MOD & DEMOD)

TEST POINT	MODE	TAPE USED	M.EQ.	INPUT SIGNAL	ADJUSTMENT
TP307 F28·AB TERMINAL (Trigger)	PLAY	ALIGNMENT TAPE RF SWEEP	OSCILLOSCOPE	----------	VR315 (Y PB EQ2 R/P1) VR316 (Y PB EQ2 R/P2)

1. SW304 (on W3) : OFF
2. SCOPE CH1 : TP307
   SCOPE CH2 : F28·AB TERMINAL (Trigger)
3. Adjust VR315 and VR316 (CH1 and CH2)
   RF signals For :
   6MHz Level = 100%
   10MHz Level = 65%
4. SW304 (on W3) : ON

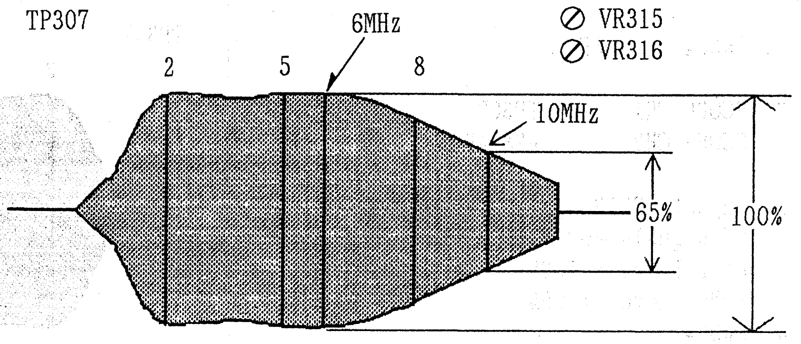

6MHz : 10MHz = 100 : 65

12-3-P. Y PLAYBACK EQ2 ADJUSTMENT (FOR AU-62/AU-65 PAL)

(W3 MOD & DEMOD)

TEST POINT	MODE	TAPE USED	M.EQ.	INPUT SIGNAL	ADJUSTMENT
TP307 F28·AB TERMINAL (Trigger)	PLAY	ALIGNMENT TAPE RF SWEEP	OSCILLOSCOPE	----------	VR315 (Y PB EQ2 R/P1) VR316 (Y PB EQ2 R/P2)

1. SW304 (on W3) : OFF
2. SCOPE CH1 : TP307
   SCOPE CH2 : F28·AB TERMINAL (Trigger)
3. Adjust VR315 and VR316 (CH1 and CH2)
   RF signals For :
   8MHz Level = 100%
   12MHz Level = 40% ± 5%
4. SW304 (on W3) : ON

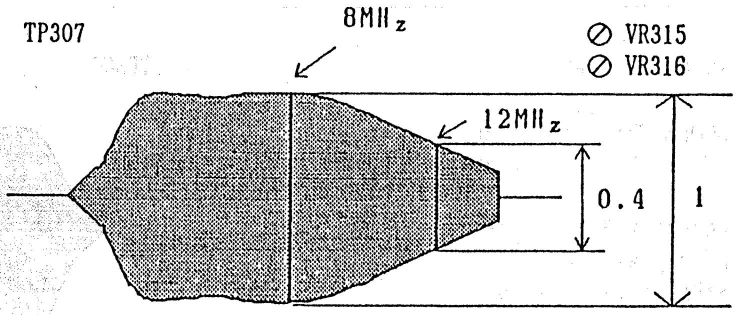

8MHz : 12MHz = 100 : 40 ± 5

12-4-N. Y PLAYBACK EQ2 ADJUSTMENT (FOR AU-63 NTSC)

(W3 MOD & DEMOD)

TEST POINT	MODE	TAPE USED	M.EQ.	INPUT SIGNAL	ADJUSTMENT
TP307 F28·AB EDGE CONNECTOR (Trigger)	PLAY	ALIGNMENT TAPE RF. SWEEP	OSCILLOSCOPE	----------	VR313 (Y PB EQ2 AT1) VR314 (Y PB EQ2 AT2)

1. SW304 : OFF
2. SCOPE CH1 : TP307
   SCOPE CH2 : F28·AB (Trigger)
3. Adjust VR313 and VR314 (CH1 and CH2)
   RF signals For :
   6MHz Level = 100%
   10MHz Level = 65%
4. SW304 : ON

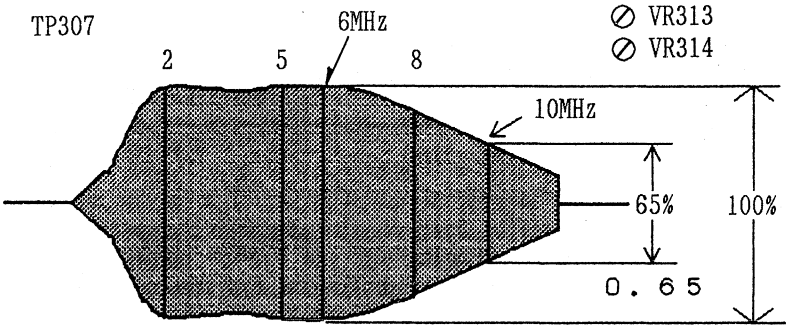

6MHz : 10MHz = 100 : 65

12-4-P. Y PLAYBACK EQ2 ADJUSTMENT (FOR AU-63 PAL)

(W3 MOD & DEMOD)

TEST POINT	MODE	TAPE USED	M.EQ.	INPUT SIGNAL	ADJUSTMENT
TP307 F28·AB EDGE CONNECTOR (Trigger)	PLAY	ALIGNMENT TAPE RF. SWEEP	OSCILLOSCOPE	----------	VR313 (Y PB EQ2 AT1) VR314 (Y PB EQ2 AT2)

1. SW304 : OFF
2. SCOPE CH1 : TP307
   SCOPE CH2 : F28·AB (Trigger)
3. Adjust VR313 and VR314 (CH1 and CH2)
   RF signals For :
   8MHz Level = 100%
   12MHz Level = 40% ± 5%
4. SW304 : ON

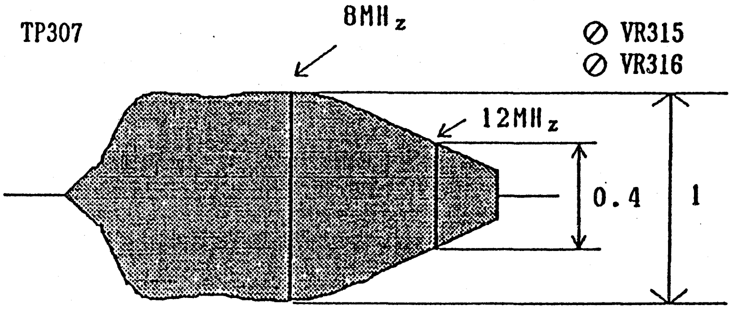

8MHz : 12MHz = 100 : 40 ± 5

12-5-N. Y PLAYBACK FREQUENCY RESPONSE (EQ1) ADJUSTMENT (FINE) (FOR AU-62/AU-63/AU-65 NTSC) (W3 MOD & DEMOD)

TEST POINT	MODE	TAPE USED	M.EQ.	INPUT SIGNAL	ADJUSTMENT
COMPONENT Y OUT F28·AB TERMINAL (Trigger)	PLAY	ALIGNMENT TAPE SWEEP	WAVE FORM MONITOR (TEK 1750)	-------	VR302 (R/P CH2) VR304 (R/P CH1)

1. SW304 : ON
2. SCOPE CH1 : COMPONENT Y OUT
   SCOPE CH2 : F28·AB (Trigger)
3. Adjust VR302 and VR304 so that the frequency response becomes For :
   0.5MHz = 100%
   4.0MHz = 95 ~ 100%

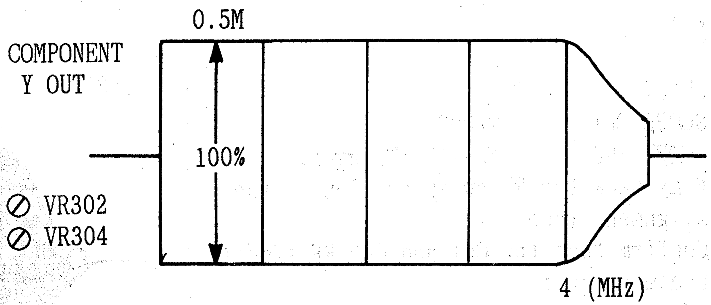

REFERENCE : 0.5MHz = 100%
SPEC : 4MHz = 95 ~ 100%

12-5-P. Y PLAYBACK FREQUENCY RESPONSE (EQ1) ADJUSTMENT (FINE) (FOR AU-62/AU-63/AU-65 PAL) (W3 MOD & DEMOD)

TEST POINT	MODE	TAPE USED	M.EQ.	INPUT SIGNAL	ADJUSTMENT
COMPONENT Y OUT F28·AB TERMINAL (Trigger)	PLAY	ALIGNMENT TAPE SWEEP	WAVE FORM MONITOR (TEK 1751)	-------	VR302 (R/P CH2) VR304 (R/P CH1)

1. SW304 : ON
2. SCOPE CH1 : COMPONENT Y OUT
   SCOPE CH2 : F28·AB (Trigger)
3. Adjust VR302 and VR304 so that the frequency response becomes For :
   0.5MHz = 100%
   5.0MHz = 95% ± 5%

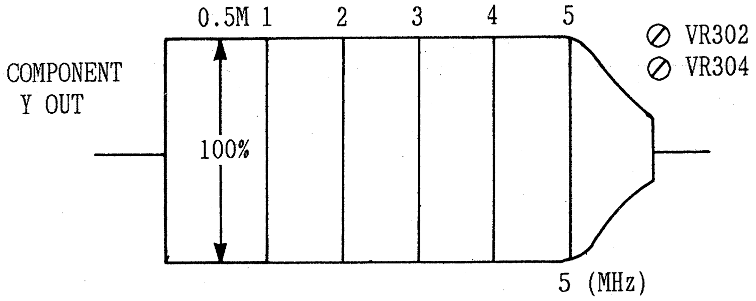

REFERENCE : 0.5MHz = 100%
SPEC : 5MHz = 95 ± 5%

12-6-N. Y PLAYBACK EQ2·EQ1 CONFIRMATION (FOR AU-65/63/62 NTSC)

(W3 MOD & DEMOD)

TEST POINT	MODE	TAPE USED	M.EQ.	INPUT SIGNAL	ADJUSTMENT
TP307 COMPONENT Y OUT F28·AB TERMINAL (Trigger)	PLAY	ALIGNMENT TAPE RF SWEEP & VIDEO SWEEP	WAVE FORM MONITOR (TEK OR 1750) OSCILLOSCOPE	-------	------------

Step 1.

1. SW304 : OFF
2. SCOPE CH1 : TP307
   SCOPE CH2 : F28·AB (Trigger)
3. Play back the RF sweep portion of the Alignment Tape.
4. Confirm that the CH1 and CH2 RF signals becomes For :
   6MHz Level = 100%
   10MHz Level = 65%
5. If it is not, readjust VR315/316 (AU-65/62), VR313/314 (AU-63).
6. SW304 : ON

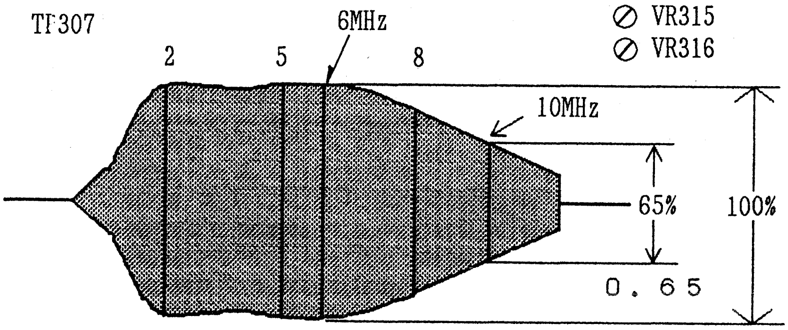

6MHz : 10MHz = 100 : 65

Step 2.

1. SW304 : ON
2. SCOPE CH1 : COMPONENT Y OUT
   SCOPE CH2 : F28·AB (Trigger)
3. Play back the Sweep portion of the Alignment Tape.
4. Comfirm that the frequency response becomes For :
   0.5MHz = 100%
   4MHz = 95 ~ 100%
5. If it is not, readjust VR302 and VR304.

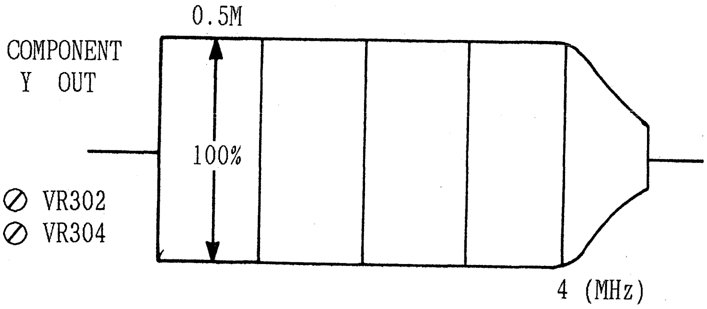

REFIRENCE : 0.5MHz = 100%
SPEC : 4MHz = 95 ~ 100%

12-6-P. Y PLAYBACK EQ2·EQ1 CONFIRMATION (FOR AU-65/63/62 PAL)

(W3 MOD & DEMOD)

TEST POINT	MODE	TAPE USED	M.EQ.	INPUT SIGNAL	ADJUSTMENT
TP307 COMPONENT Y OUT F28·AB TERMINAL (Trigger)	PLAY	ALIGNMENT TAPE RF SWEEP & VIDEO SWEEP	WAVE FORM MONITOR (TEK1751) OR OSCILLOSCOPE	-------	------------

Step 1.

1. SW304 : OFF
2. SCOPE CH1 : TP307
   SCOPE CH2 : F28·AB (Trigger)
3. Play back the RF sweep portion of the Alignment Tape.
4. Confirm that the CH1 and CH2 RF signals becomes For :
   8MHz Level = 100%
   12MHz Level = 40%
5. If it is not, readjust VR315/316 (AU-65/62), VR313/314 (AU-63).
6. SW304 : ON

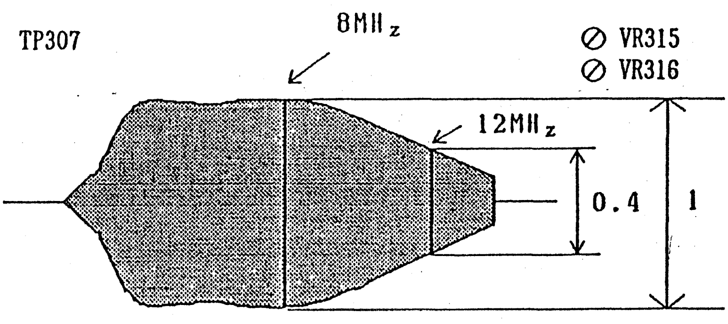

8MHz : 12MHz = 100 : 40

Step 2.

1. SW304 : ON
2. SCOPE CH1 : COMPONENT Y OUT
   SCOPE CH2 : F28·AB (Trigger)
3. Play back the Sweep portion of the Alignment Tape.
4. Confirm that the frequency response becomes For :
   0.5MHz = 100%
   5MHz = 95% ± 5%
5. If it is not, readjust VR302 and VR304.

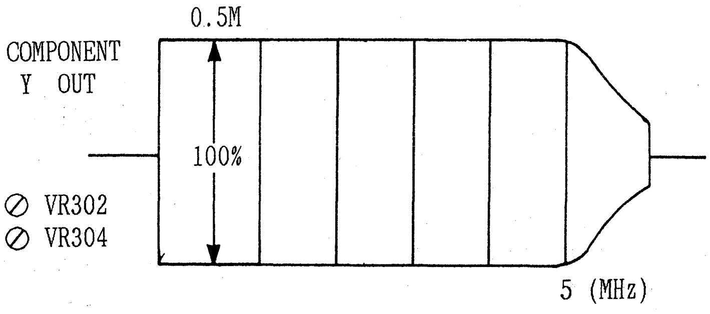

REFIRENCE : 0.5MHz = 100%
SPEC : 5MHz = 95 ± 5%

12-7-N. Y CH1 RECORDING CURRENT ADJUSTMENT (FOR AU-65 NTSC)

(RA / HA BOARD)

TEST POINT	MODE	TAPE USED	M.EQ.	INPUT SIGNAL	ADJUSTMENT
TP3 (on RA/HA) TP201 (on RA/HA) F28·AB (on W3) (Trigger)	SELF REC/PLAY	BLANK TAPE	OSCILLOSCOPE	COMPONENT 50% WHITE	VC1 (Y CH1 REC EQ) (on RA/HA BOARD) VR3 (Y CH1 CURR) (on RA/HA BOARD)

Step 1.

1. VR3 : CENTER
2. Place the unit in the recording mode.
3. SCOPE CH1 : TP3 (on RA/HA)
   SCOPE CH2 : F28·AB (Trigger) (on W3)
4. During the recording mode, turn VC1 and measure the maximum level and minimum level.
5. Adjust VC1 for the carrier level becomes middle level as shown.

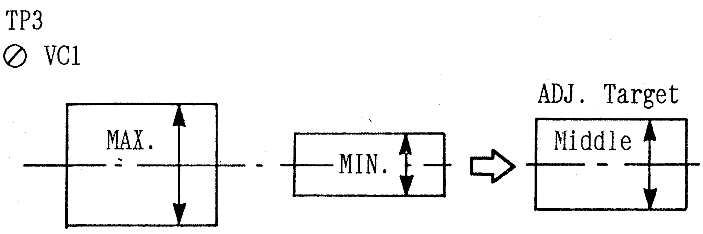

Step 2.

1. SCOPE CH1 : TP3 (on RA/HA)
   SCOPE CH2 : F28·AB (Trigger) (W3)
2. Place the unit in the recording mode.
3. Turn VR3 so that the FM Carrier level of 50% White portion becomes 640mVp-p, 800mVp-p and 960mVp-p record about 10 sec. for each level.
4. SCOPE : TP201 (on RA/HA)
5. Play back the just recorded portion.
6. Find the maximum playback level.
7. Set VR3 to maximum playback level point (640mVp-p, 800mVp-p or 960mVp-p) at TP3.

Note:
If the playback maximum level is all the same level (±1.5%), set VR3 to lower playback level point. (640mVp-p or 800mVp-p)

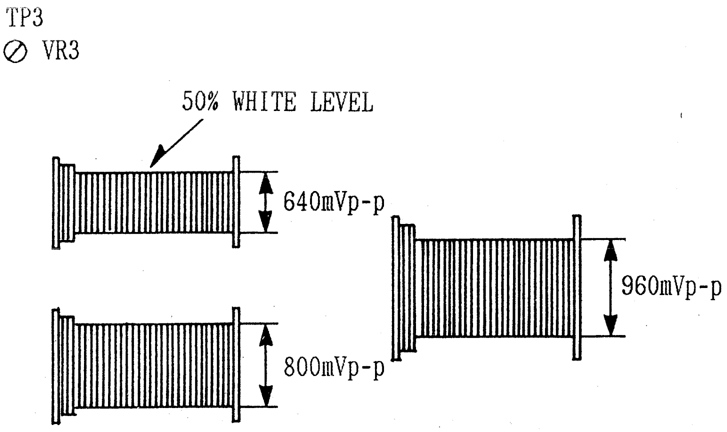

Note:
This is because AU-65 doesn't have a Confidence PB Head.

12-7-P. Y CH1 RECORDING CURRENT ADJUSTMENT (FOR AU-65 PAL)

(RA / HA BOARD)

TEST POINT	MODE	TAPE USED	M.EQ.	INPUT SIGNAL	ADJUSTMENT
TP3 (on RA/HA) TP201 (on RA/HA) F28·AB (on W3) (Trigger)	SELF REC/PLAY	BLANK TAPE	OSCILLOSCOPE	COMPONENT 50% WHITE	VC1 (Y CH1 REC EQ) (on RA/HA BOARD) VR3 (Y CH1 CURR) (on RA/HA BOARD)

Step 1.

1. VR3 : CENTER
2. Place the unit in the recording mode.
3. SCOPE CH1 : TP3 (on RA/HA)
   SCOPE CH2 : F28·AB (Trigger) (on W3)
4. During the recording mode, turn VC1 and measure the maximum level and minimum level.
5. Adjust VC1 for the carrier level becomes middle level as shown.

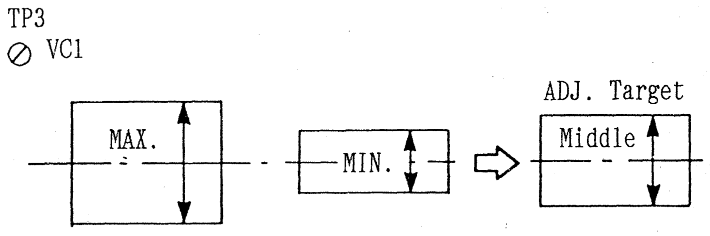

Step 2.

1. SCOPE CH1 : TP3 (on RA/HA)
   SCOPE CH2 : F28·AB (Trigger) (W3)
2. Place the unit in the recording mode.
3. Turn VR3 so that the FM Carrier level of 50% White portion becomes 630mVp-p, 780mVp-p and 940mVp-p record about 10 sec. for each level.
4. SCOPE : TP201 (on RA/HA)
5. Play back the just recorded portion.
6. Find the maximum playback level.
7. Set VR3 to maximum playback level point (630mVp-p, 780mVp-p or 940mVp-p) at TP3.

Note:
If the playback maximum level is all the same level (±1.5%), set VR3 to lower playback level point. (630mVp-p or 780mVp-p)

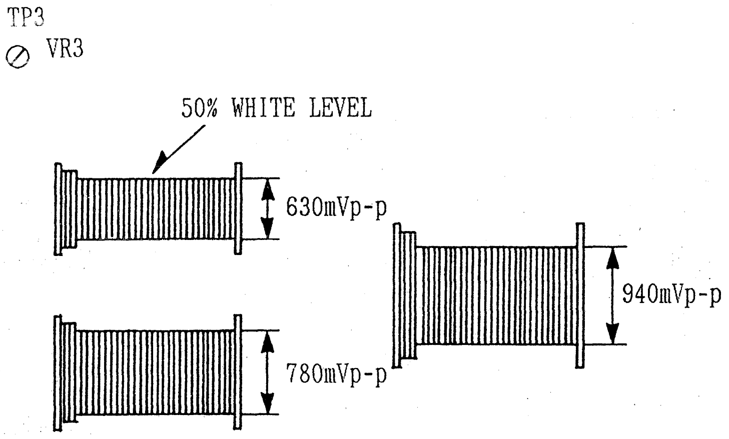

Note:
This is because AU-65 doesn't have a Confidence PB Head.

12-8-N. Y CH2 RECORDING CURRENT ADJUSTMENT (FOR AU-65 NTSC)

(RA / HA BOARD)

TEST POINT	MODE	TAPE USED	M.EQ.	INPUT SIGNAL	ADJUSTMENT
TP4 (on RA/HA) TP202 (on RA/HA) F33·AB (on W3) (Trigger)	SELF REC/PLAY	BLANK TAPE	OSCILLOSCOPE	COMPONENT 50% WHITE	VC2 (Y CH2 REC EQ) (on RA/HA BOARD) VR4 (Y CH2 CURR) (on RA/HA BOARD)

Step 1.

1. VR4 : CENTER
2. Place the unit in the recording mode.
3. SCOPE CH1 : TP4 (on RA/HA)
   SCOPE CH2 : F33·AB (Trigger) (on W3)
4. During the recording mode, turn VC2 and measure the maximum level and minimum level.
5. Adjust VC2 for the carrier level becomes middle level as shown.

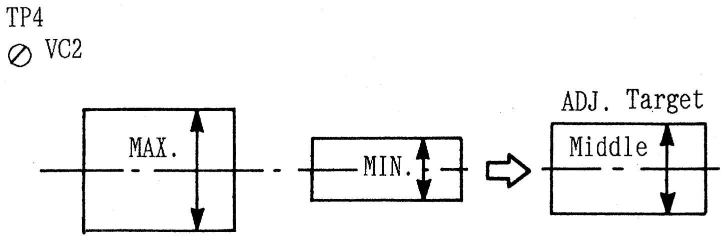

Step 2.

1. SCOPE CH1 : TP4 (on RA/HA)
   SCOPE CH2 : F33·AB (Trigger) (on W3)
2. Place the unit in the recording mode.
3. Turn VR4 so that the FM Carrier level of 50% White portion becomes 640mVp-p, 800mVp-p and 960mVp-p record about 10 sec. for each level.
4. SCOPE : TP202 (on RA/HA)
5. Play back the just recorded portion.
6. Find the maximum playback level.
7. Set VR4 to maximum playback level point (640mVp-p, 800mVp-p or 960mVp-p) at TP3.

Note:
If the playback maximum level is all the same level (±1.5%), set VR4 to lower playback level point. (640mVp-p or 800mVp-p)

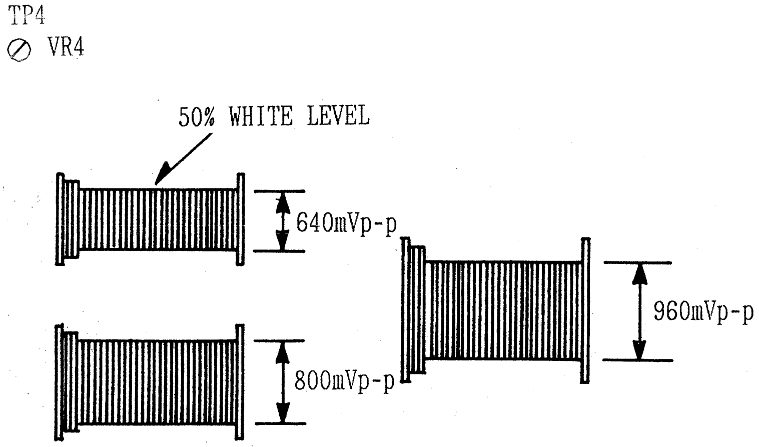

Note:
This is because AU-65 doesn't have a Confidence PB Head.

12-8-P. Y CH2 RECORDING CURRENT ADJUSTMENT (FOR AU-65 PAL)

(RA / HA BOARD)

TEST POINT	MODE	TAPE USED	M.EQ.	INPUT SIGNAL	ADJUSTMENT
TP4 (on RA/HA) TP202 (on RA/HA) F33·AB (on W3) (Trigger)	SELF REC/PLAY	BLANK TAPE	OSCILLOSCOPE	COMPONENT 50% WHITE	VC2 (Y CH2 REC EQ) (on RA/HA BOARD) VR4 (Y CH2 CURR) (on RA/HA BOARD)

Step 1.

1. VR4 : CENTER
2. Place the unit in the recording mode.
3. SCOPE CH1 : TP4 (on RA/HA)
   SCOPE CH2 : F33·AB (Trigger) (on W3)
4. During the recording mode, turn VC2 and measure the maximum level and minimum level.
5. Adjust VC2 for the carrier level becomes middle level as shown.

TP4
⊘ VC2

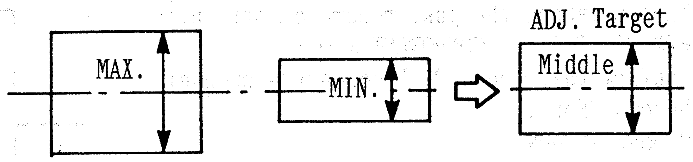

Step 2.

1. SCOPE CH1 : TP4 (on RA/HA)
   SCOPE CH2 : F33·AB (Trigger) (on W3)
2. Place the unit in the recording mode.
3. Turn VR4 so that the FM Carrier level of 50% White portion becomes 630mVp-p, 780mVp-p and 940mVp-p record about 10 sec. for each level.
4. SCOPE : TP202 (on RA/HA)
5. Play back the just recorded portion.
6. Find the maximum playback level.
7. Set VR4 to maximum playback level point (630mVp-p, 780mVp-p or 940mVp-p) at TP3.

Note:
If the playback maximum level is all the same level (±1.5%), set VR4 to lower playback level point. (630mVp-p or 780mVp-p)

TP4
⊘ VR4

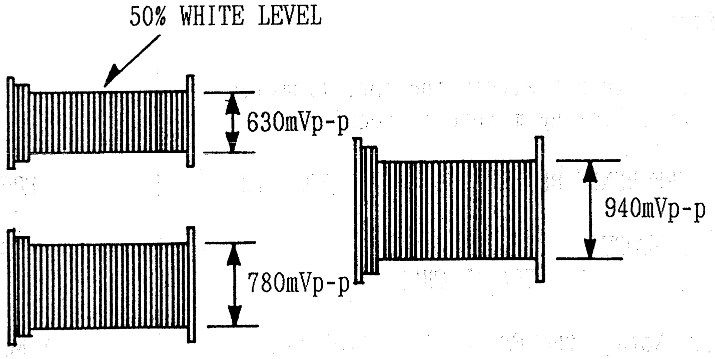

Note:
This is because AU-65 doesn't have a Confidence PB Head.

12-9-N. Y SELF RECORDING PLAYBACK FREQUENCY RESPONSE ADJUSTMENT (FOR AU-65 NTSC)

(RA / HA BOARD)

TEST POINT	MODE	TAPE USED	M.EQ.	INPUT SIGNAL	ADJUSTMENT
COMPONENT Y OUT TP3(CH1) (on RA/HA) TP4(CH2) (on RA/HA)	SELF REC/PLAY	BLANK TAPE	OSCILLOSCOPE WAVEFORM MONITOR	COMPONENT 60% H. SWEEP	VC1, VR3 (CH1) (on RA/HA BOARD) VC2, VR4 (CH2) (on RA/HA BOARD)

Step 1.

1. Make a recording.
2. Then playback the just recorded portion.
3. WFM MONITOR : COMPONENT Y OUT
4. Confirm that the Y PB Frequency Response becomes For :
   0.5MHz = 100%
   4MHz = 95% ± 5%

COMPONENT Y OUT

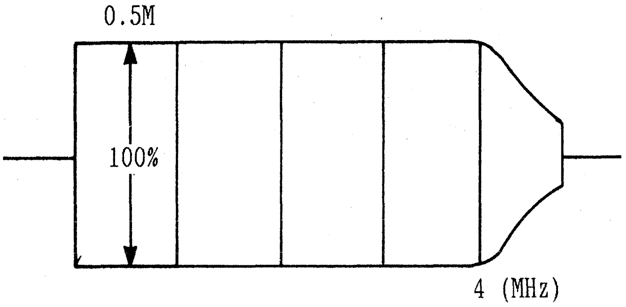

REF : 0.5MHz = 100%
SPEC : 4MHz = 90 ~ 95%

Step 2.

If it is not within the specification, the following method is required.

FREQUENCY RESPONSE LEVEL IS TOO HIGH.

1) SCOPE : TP3 (Y CH1)
   TP4 (Y CH2)
2) Notate the FM Carrier Level at TP3 (CH1) and TP4 (CH2) on RA/HA.
3) Turn VC1 (CH1) and VC2 (CH2) slightly to increase the FM Carrier Level at TP3 (CH1) and TP4 (CH2).
4) Adjust VR3 (CH1) and VR4 (CH2) so that the FM Carrier Level matches the notated FM Carrier Level in item 2.

FREQUENCY RESPONSE IS COMPRESSED.

1) SCOPE : TP3 (Y CH1)
   TP4 (Y CH2)
2) Notate the FM Carrier Level at TP3 (CH1) and TP4 (CH2) on RA/HA.
3) Turn VC1 (CH1) and VC2 (CH2) slightly to decrease the FM Carrier Level at TP3 (CH1) and TP4 (CH2).
4) Adjust VR3 (CH1) and VR4 (CH2) so that the FM Carrier Level matches notated FM Carrier Level in item 2.

Step 3.

1. Finally confirm the Y Self Rec Frequency Response (Step1).

12-9-P. Y SELF RECORDING PLAYBACK FREQUENCY RESPONSE ADJUSTMENT
(FOR AU-65 PAL)

(RA / HA BOARD)

TEST POINT	MODE	TAPE USED	M.EQ.	INPUT SIGNAL	ADJUSTMENT
COMPONENT Y OUT TP3 (on RA/HA) TP4 (on RA/HA)	SELF REC/PLAY	BLANK TAPE	OSCILLOSCOPE WAVEFORM MONITOR	COMPONENT 60% H. SWEEP	VC1, VR3 (CH1) (on RA/HA BOARD) VC2, VR4 (CH2) (on RA/HA BOARD)

Step 1.

1. Make a recording.
2. Then playback the just recorded portion.
3. WFM MONITOR : COMPONENT Y OUT
4. Confirm that the Y PB Frequency Response becomes For :
   0.5MHz = 100%
   5MHz = 95% ± 5%

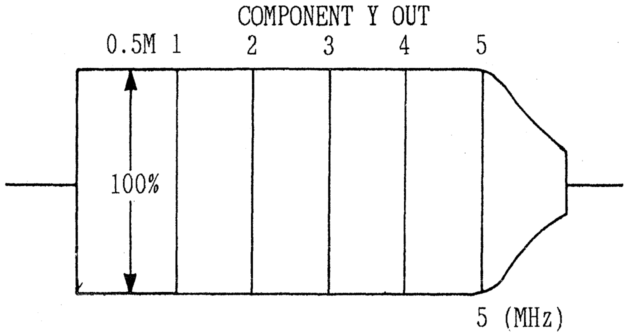

REF : 0.5MHz = 100%
SPEC : 5MHz = 95% ± 5%

Step 2.

If it is not within the specification, the following method is required.

FREQUENCY RESPONSE LEVEL IS TOO HIGH.

1) SCOPE : TP3 (Y CH1)
   TP4 (Y CH2)
2) Notate the FM Carrier Level at TP3 (CH1) and TP4 (CH2) on RA/HA.
3) Turn VC1 (CH1) and VC2 (CH2) slightly to increase the FM Carrier Level at TP3 (CH1) and TP4 (CH2).
4) Adjust VR3 (CH1) and VR4 (CH2) so that the FM Carrier Level matches the notated FM Carrier Level in item 2.

FREQUENCY RESPONSE IS COMPRESSED.

1) SCOPE : TP3 (Y CH1)
   TP4 (Y CH2)
2) Notate the FM Carrier Level at TP3 (CH1) and TP4 (CH2) on RA/HA.
3) Turn VC1 (CH1) and VC2 (CH2) slightly to decrease the FM Carrier Level at TP3 (CH1) and TP4 (CH2).
4) Adjust VR3 (CH1) and VR4 (CH2) so that the FM Carrier Level matches notated FM Carrier Level in item 2.

Step 3.

1. Finally confirm the Y Self Rec Frequency Response (Step1).

12-10-N. Y HF LINEARITY ADJUSTMENT (1)
(FOR AU-65/63/62 NTSC)

(W3 MOD & DEMOD)

TEST POINT	MODE	TAPE USED	M.EQ.	INPUT SIGNAL	ADJUSTMENT
COMPONENT Y OUT	PLAY	ALIGNMENT TAPE 80IRE RAMP SIGNAL	WFM/VECTOR MONITOR (TEK 1750)	----------	VR310 (EQ4)

Step 1.
WFM MONITOR CONDITION

1. MODE : WFM mode
2. FILTER : CHROMA

Step 2.

1. WFM MONITOR : COMPONENT Y OUT
2. Adjust VR310 so that the HF linearity becomes for :
   A = 100% B = 100 ± 10%
3. Confirm the Y PLAYBACK FREQUENCY RESPONSE (EQ1) ADJUSTMENT (FINE) (12-5-N).
4. If it is not, readjust Section 12-5-N and 12-10-N.

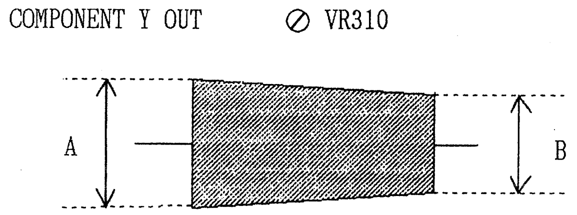

A : B = 100 : 100 ± 10

12-10-P. Y HF LINEARITY ADJUSTMENT (1)
(FOR AU-65/63/62 PAL)

(W3 MOD & DEMOD)

TEST POINT	MODE	TAPE USED	M.EQ.	INPUT SIGNAL	ADJUSTMENT
COMPONENT Y OUT	PLAY	ALIGNMENT TAPE RAMP SIGNAL	WFM/VECTOR MONITOR (TEK 1751)	----------	VR310 (EQ4)

Step 1.
WFM MONITOR CONDITION

1. MODE : WFM mode
2. FILTER : CHROMA

Step 2.

1. WFM MONITOR : COMPONENT Y OUT
2. Adjust VR310 so that the HF linearity becomes for :
   A = 100% B = 100 ± 10%
3. Confirm the Y PLAYBACK FREQUENCY RESPONSE (EQ1) ADJUSTMENT (FINE) (12-5-P).
4. If it is not, readjust Section 12-5-P and 12-10-P.

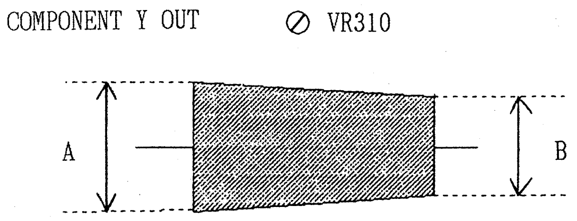

A : B = 100 : 100 ± 10

12-11. C PLAYBACK FREQUENCY RESPONSE ADJUSTMENT (FINE)(FOR AU-65/AU-62 NTSC & PAL)

(W3 MOD & DEMOD)

TEST POINT	MODE	TAPE USED	M.EQ.	INPUT SIGNAL	ADJUSTMENT
COMPONENT Pr/Pb OUT F33·AB (Trigger)	PLAY	ALIGNMENT TAPE SWEEP	WAVEFORM MONITOR OR OSCILLOSCOPE	-------	VR712 (R/P 1) VR713 (R/P 2)

1. SCOPE CH1 : COMPONENT Pr/Pb OUT
   SCOPE CH2 : F33·AB (Trigger)
2. Adjust VR712 and VR713 so that the frequency response becomes for :
   0.25MHz = 100%
   1.5MHz = 95% ± 5%

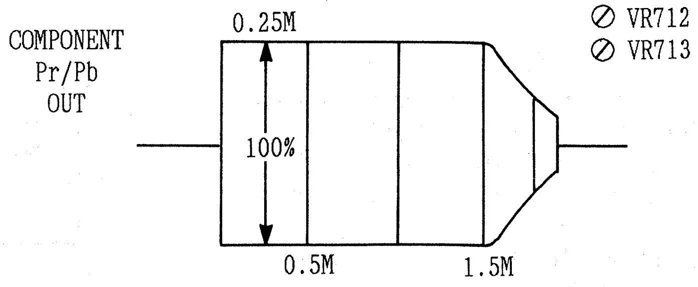

REF : 0.25MHz = 100%
SPEC : 1.5MHz = 95% ± 5%

12-12. C PLAYBACK FREQUENCY RESPONSE ADJUSTMENT (FINE)(FOR AU-63 NTSC & PAL)

(W3 MOD & DEMOD)

TEST POINT	MODE	TAPE USED	M.EQ.	INPUT SIGNAL	ADJUSTMENT
COMPONENT Pr/Pb OUT F33·AB (Trigger)	PLAY	ALIGNMENT TAPE SWEEP	WAVEFORM MONITOR (TEK 1750)	-------	VR710 (AT1) VR711 (AT1)

1. SCOPE CH1 : COMPONENT Pr/Pb OUT
   SCOPE CH2 : F33·AB (Trigger)
2. Adjust VR710 and VR711 so that the frequency response becomes for :
   0.25MHz = 100%
   1.5MHz = 95% ± 5%

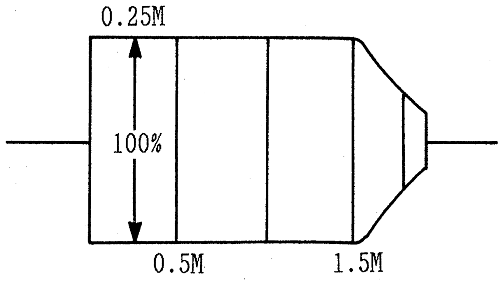

REF : 0.25MHz =100%
SPEC : 1.5MHz = 95% ± 5%

12-13-N.C CH1 RECORDING CURRENT ADJUSTMENT (FOR AU-65 NTSC)

(RA / HA BOARD)

TEST POINT	MODE	TAPE USED	M.EQ.	INPUT SIGNAL	ADJUSTMENT
TP5 (on RA/HA) TP203 (on RA/HA)	SELF REC/PLAY	BLANK TAPE	OSCILLOSCOPE	COMPONENT 50% WHITE	VC3 (C CH1 REC EQ) (on RA/HA BOARD) VR5 (C CH1 CURR) (on RA/HA BOARD)

Step 1.

1. VR5 : CENTER
2. Place the unit in the recording mode.
3. SCOPE : TP5 (on RA/HA)
4. During the recording mode, turn VC3 and measure the maximum level and minimum level.
5. Adjust VC3 for the carrier level becomes middle level as shown.

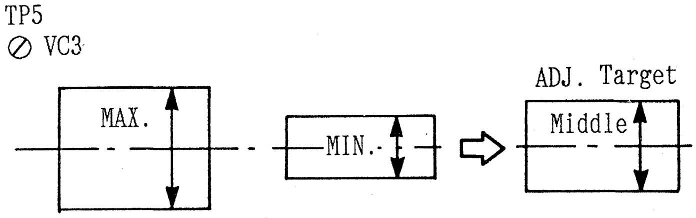

Step 2.

1. SCOPE : TP5 (on RA/HA)
2. Place the unit in the recording mode.
3. Turn VR5 so that the FM Carrier A level becomes 640mVp-p, 800mVp-p and 960mVp-p record about 10 sec. for each level.
4. SCOPE : TP203 (on RA/HA)
5. Play back the just recorded portion.
6. Find the maximum playback level.
7. Set VR5 to maximum playback level point (640mVp-p, 800mVp-p or 960mVp-p) at TP5.

Note:
If the playback maximum level is all the same level (±1.5%), set VR5 to lower playback level point.

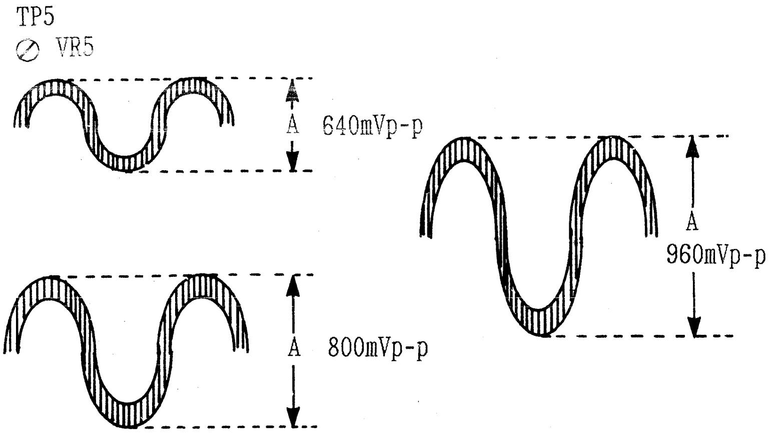

Note : This is because AU-65 doesn't have a Confidence PB Head.

12-13-P. C CH1 RECORDING CURRENT ADJUSTMENT (FOR AU-65 PAL)

(RA / HA BOARD)

TEST POINT	MODE	TAPE USED	M.EQ.	INPUT SIGNAL	ADJUSTMENT
TP5 (on RA/HA) TP203 (on RA/HA)	SELF REC/PLAY	BLANK TAPE	OSCILLOSCOPE	COMPONENT 50% WHITE	VC3 (C CH1 REC EQ) (on RA/HA BOARD) VR5 (C CH1 CURR) (on RA/HA BOARD)

Step 1.

1. VR5 : CENTER
2. Place the unit in the recording mode.
3. SCOPE : TP5 (on RA/HA)
4. During the recording mode, turn VC3 and measure the maximum level and minimum level.
5. Adjust VC3 for the carrier level becomes middle level as shown.

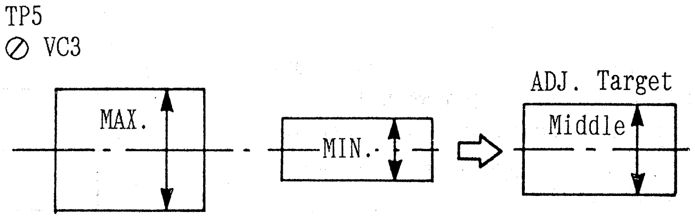

Step 2.

1. SCOPE : TP5 (on RA/HA)
2. Place the unit in the recording mode.
3. Turn VR5 so that the FM Carrier A level becomes 530mVp-p, 660mVp-p and 800mVp-p record about 10 sec. for each level.
4. SCOPE : TP203 (on RA/HA)
5. Play back the just recorded portion.
6. Find the maximum playback level.
7. Set VR5 to maximum playback level point (530mVp-p, 660mVp-p or 800mVp-p) at TP5.

Note:
If the playback maximum level is all the same level (±1.5%), set VR5 to lower playback level point.

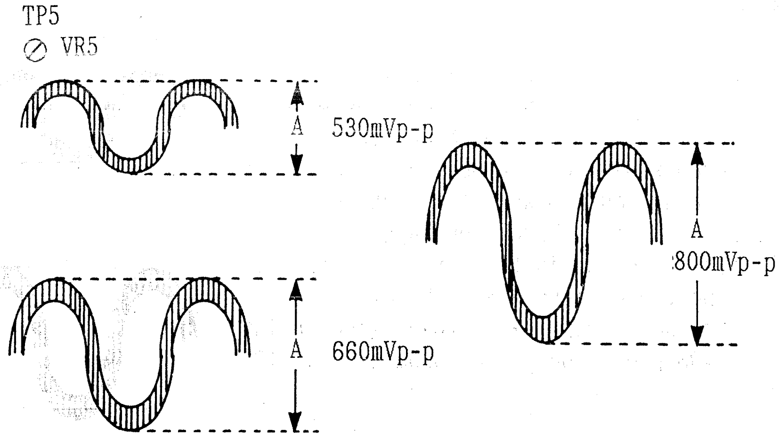

Note : This is because AU-65 doesn't have a Confidence PB Head.

12-14-N. C CH2 RECORDING CURRENT ADJUSTMENT (FOR AU-65 NTSC)

(RA / HA BOARD)

TEST POINT	MODE	TAPE USED	M.EQ.	INPUT SIGNAL	ADJUSTMENT
TP6 (on RA/HA) TP204 (on RA/HA)	SELF REC/PLAY	BLANK TAPE	OSCILLOSCOPE	COMPONENT 50% WHITE	VC4 (C CH2 REC EQ) (on RA/HA BOARD) VR6 (C CH2 CURR) (on RA/HA BOARD)

Step 1.

1. VR6 : CENTER
2. Place the unit in the recording mode.
3. SCOPE : TP6 (on RA/HA)
4. During the recording mode, turn VC4 and measure the maximum level and minimum level.
5. Adjust VC4 for the carrier level becomes middle level as shown in figure.

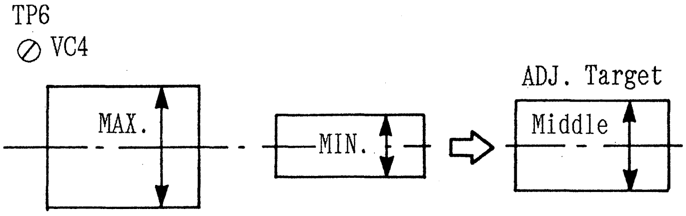

Step 2.

1. SCOPE : TP6 (on RA/HA)
2. Place the unit in the recording mode.
3. Turn VR6 so that the FM Carrier A level becomes 640mVp-p, 800mVp-p and 960mVp-p record about 10 sec. for each level.
4. SCOPE : TP204 (on RA/HA)
5. Play back the just recorded portion.
6. Find the maximum playback level.
7. Set VR6 to maximum playback level point (640mVp-p, 800mVp-p or 960mVp-p) at TP6.

Note:
If the playback maximum level is all the same level (±1.5%), set VR6 to lower playback level point.

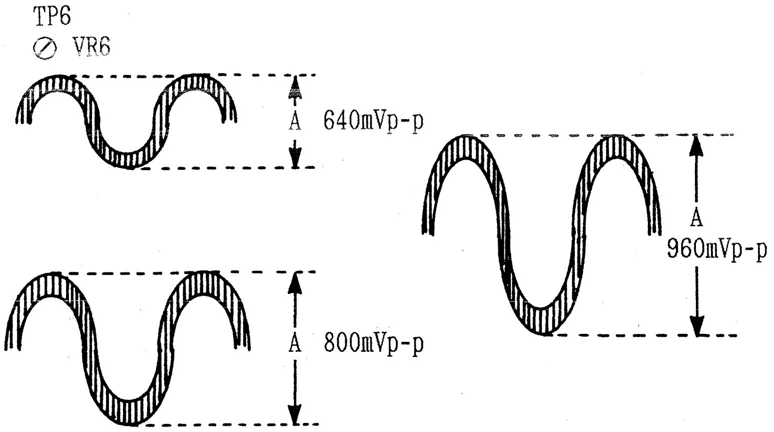

Note : This is because AU-65 doesn't have a Confidence PB Head.

12-14-P. C CH2 RECORDING CURRENT ADJUSTMENT (FOR AU-65 PAL)

(RA / HA BOARD)

TEST POINT	MODE	TAPE USED	M.EQ.	INPUT SIGNAL	ADJUSTMENT
TP6 (on RA/HA) TP204 (on RA/HA)	SELF REC/PLAY	BLANK TAPE	OSCILLOSCOPE	COMPONENT 50% WHITE	VC4 (C CH2 REC EQ) (on RA/HA BOARD) VR6 (C CH2 CURR) (on RA/HA BOARD)

Step 1.

1. VR6 : CENTER
2. Place the unit in the recording mode.
3. SCOPE : TP6 (on RA/HA)
4. During the recording mode, turn VC4 and measure the maximum level and minimum level.
5. Adjust VC4 for the carrier level becomes middle level as shown in figure.

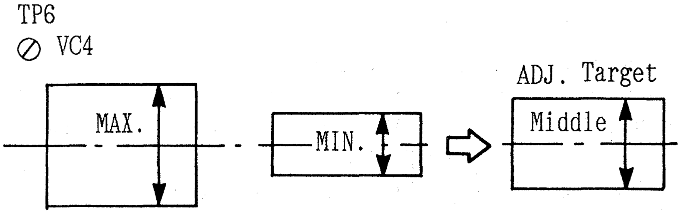

Step 2.

1. SCOPE : TP6 (on RA/HA)
2. Place the unit in the recording mode.
3. Turn VR6 so that the FM Carrier A level becomes 530mVp-p, 660mVp-p and 800mVp-p record about 10 sec. for each level.
4. SCOPE : TP204 (on RA/HA)
5. Play back the just recorded portion.
6. Find the maximum playback level.
7. Set VR6 to maximum playback level point (530mVp-p, 660mVp-p or 800mVp-p) at TP6.

Note:
If the playback maximum level is all the same level (±1.5%), set VR6 to lower playback level point.

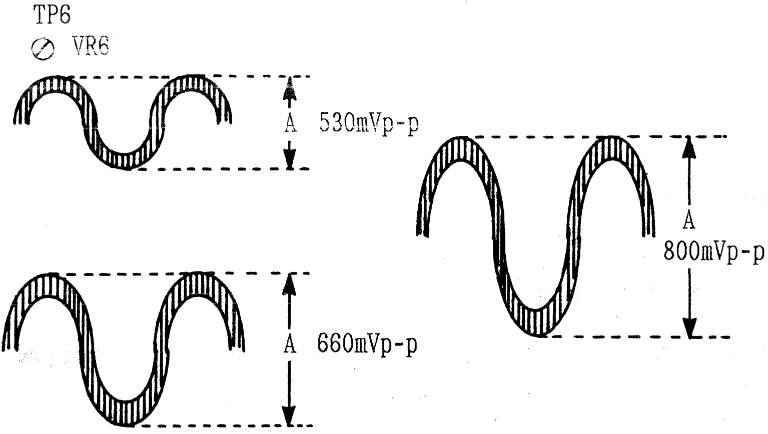

Note : This is because AU-65 doesn't have a Confidence PB Head.

12-15-N. C SELF RECORDING PLAYBACK FREQUENCY RESPONSE ADJUSTMENT (FOR AU-65 NTSC)

(RA / HA BOARD)

TEST POINT	MODE	TAPE USED	M.EQ.	INPUT SIGNAL	ADJUSTMENT
COMPONENT Pr/Pb OUT TP5 (on RA/HA) TP6 (on RA/HA)	SELF REC/PLAY	BLANK	OSCILLOSCOPE WAVEFORM MONITOR	COMPONENT 60% H. SWEEP	VC3, VR5 (CH1) (on RA/HA BOARD) VC4, VR6 (CH2) (on RA/HA BOARD)

Step 1.

1. Make a recording for a few minutes.
2. Then playback the just recorded portion.
3. WFM MONITOR : COMPONENT Pr OUT
   COMPONENT Pb OUT
4. Confirm that the C PB Frequency Response becomes for :
   0.25MHz = 100%
   1.5MHz = 80% ± 5%

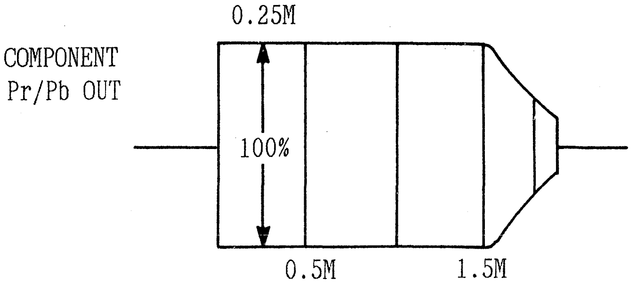

REF : 0.25MHz = 100%
SPEC : 1.5MHz = 80% ± 5%

Step 2.

If it is not within the specification, the following method is required.

* FREQUENCY RESPONSE LEVEL IS TOO HIGH AT 1.5MHz PORTION.

1) SCOPE : TP5 (C CH1)
   TP6 (C CH2)

2) Notate the FM Carrier Level at TP5 (CH1) and TP6 (CH2).

3) Turn VC3 (CH1) and VC4 (CH2) slightly to increase the FM Carrier Level at TP5 (CH1) and TP6 (CH2).
4) Adjust VR5 (CH1) and VR6 (CH2) so that the FM Carrier Level matches the notated FM Carrier Level in item 2.

* FREQUENCY RESPONSE IS COMPRESSED AT 1.5MHz PORTION.

1) SCOPE : TP5 (C CH1)
   TP6 (C CH2)

2) Notate the FM Carrier Level at TP5 (CH1) and TP6 (CH2).

3) Turn VC3 (CH1) and VC4 (CH2) slightly to decrease the FM Carrier Level at TP5 (CH1) and TP6 (CH2).
4) Adjust VR5 (CH1) and VR6 (CH2) so that the FM Carrier Level matches the notated FM Carrier Level in item 2.

12-15-P. C SELF RECORDING PLAYBACK FREQUENCY RESPONSE ADJUSTMENT (FOR AU-65 PAL)

(RA / HA BOARD)

TEST POINT	MODE	TAPE USED	M.EQ.	INPUT SIGNAL	ADJUSTMENT
COMPONENT Pr/Pb OUT TP5 (on RA/HA) TP6 (on RA/HA)	SELF REC/PLAY	BLANK	OSCILLOSCOPE WAVEFORM MONITOR	COMPONENT 60% H. SWEEP	VC3, VR5 (CH1) (on RA/HA BOARD) VC4, VR6 (CH2) (on RA/HA BOARD)

Step 1.

1. Make a recording for a few minutes.
2. Then playback the just recorded portion.
3. WFM MONITOR : COMPONENT Pr OUT
   COMPONENT Pb OUT
4. Confirm that the C PB Frequency Response becomes for :
   0.25MHz = 100%
   1.5MHz = 95% ± 5%

COMPONENT
Pr/Pb OUT

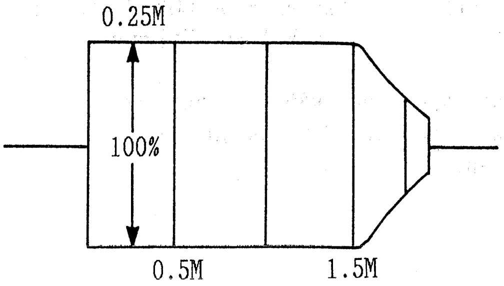

REF : 0.25MHz = 100%
SPEC : 1.5MHz = 95% ± 5%

Step 2.

If it is not within the specification, the following method is required.

* FREQUENCY RESPONSE LEVEL IS TOO HIGH AT 1.5MHz PORTION.

1) SCOPE : TP5 (C CH1)
   TP6 (C CH2)
2) Notate the FM Carrier Level at TP5 (CH1) and TP6 (CH2).
3) Turn VC3 (CH1) and VC4 (CH2) slightly to increase the FM Carrier Level at TP5 (CH1) and TP6 (CH2).
4) Adjust VR5 (CH1) and VR6 (CH2) so that the FM Carrier Level matches the notated FM Carrier Level in item 2.

* FREQUENCY RESPONSE IS COMPRESSED AT 1.5MHz PORTION.

1) SCOPE : TP5 (C CH1)
   TP6 (C CH2)
2) Notate the FM Carrier Level at TP5 (CH1) and TP6 (CH2).
3) Turn VC3 (CH1) and VC4 (CH2) slightly to decrease the FM Carrier Level at TP5 (CH1) and TP6 (CH2).
4) Adjust VR5 (CH1) and VR6 (CH2) so that the FM Carrier Level matches the notated FM Carrier Level in item 2.

12-16. Y PLAYBACK FM CARRIER LEVEL READJUSTMENT (FOR AU-65/AU-63/AU-62 NTSC & PAL)

(W3: MOD & DEMOD)

TEST POINT	MODE	TAPE USED	M.EQ.	INPUT SIGNAL	ADJUSTMENT
TP301 F29·AB (Trigger)	PLAY	ALIGNMENT TAPE COLOR BAR	OSCILLOSCOPE	-------	VR301 <R/P (AT) CH2 LEV> VR303 <R/P (AT) CH1 LEV>

1. SCOPE CH1 : TP301
   SCOPE CH2 : F29·AB EDGE CONNECTOR (on W3) For Trigger
2. Adjust VR301 and VR303 so that the signal level at TP301 is 400 ± 20mVp-p.

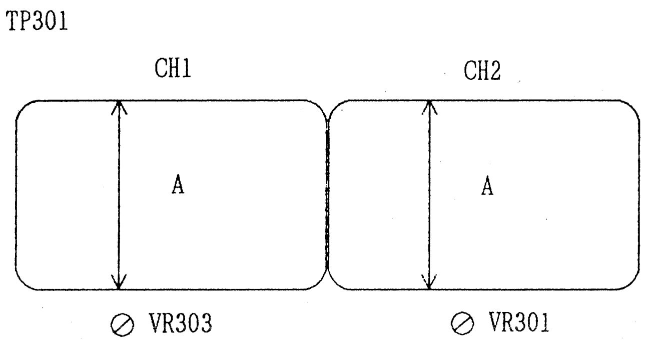

A = 400 ± 50mVp-p

12-17. C PLAYBACK FM CARRIER LEVEL READJUSTMENT (FOR AU-65/AU-63/AU-62 NTSC & PAL)

(W3: MOD & DEMOD)

TEST POINT	MODE	TAPE USED	M.EQ.	INPUT SIGNAL	ADJUSTMENT
TP701 F33·AB (Trigger)	PLAY	ALIGNMENT TAPE COLOR BAR	OSCILLOSCOPE	-------	VR701 (R/P CH2 LEV) VR702 (R/P CH1 LEV)

1. SCOPE CH1 : TP701
   SCOPE CH2 : F33·AB EDGE CONNECTOR (on W3) For Trigger
2. Adjust VR701 and VR702 so that the signal level at TP701 is 400 ± 20mVp-p.

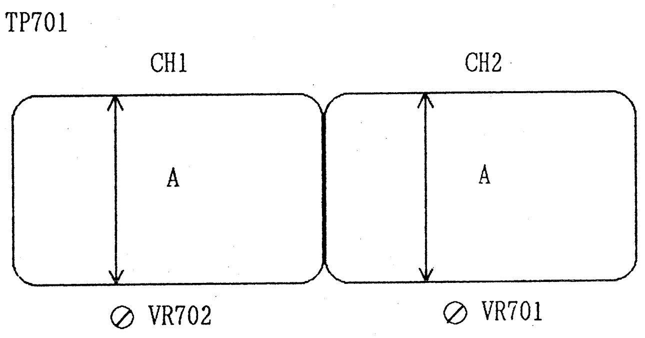

A = 400 ± 50mVp-p

12-18. Y PLAYBACK RF LEVEL ADJUSTMENT (FINE)
(FOR AU-65/63/62 NTSC & PAL)

(W3 MOD & DEMOD)

TEST POINT	MODE	TAPE USED	M.EQ.	INPUT SIGNAL	ADJUSTMENT
TP307	PLAY	ALIGNMENT TAPE COLOR BAR	OSCILLOSCOPE	-------	VR317 (LIM RF LEV)
Step 1. MACHINE CONDITION			SW304 → OFF		
Step 2. Adjust VR317 so that the RF level at TP307 is 300 ± 20mVp-p.			⊘ VR317 TP307 : 300 ± 20mVp-p		
Step 3. SW304 → ON					

12-19. C PLAYBACK RF LEVEL ADJUSTMENT (FINE)
(FOR AU-65/63/62 NTSC & PAL)

(W3 MOD & DEMOD)

TEST POINT	MODE	TAPE USED	M.EQ.	INPUT SIGNAL	ADJUSTMENT
TP703	PLAY	ALIGNMENT TAPE COLOR BAR	OSCILLOSCOPE	-------	VR714 (LIM IN RF LEV)
Step 1. MACHINE CONDITION			SW704 → OFF		
Step 2. Adjust VR714 so that the signal level at TP703 is 300 ± 20mVp-p.			⊘ VR714 TP703 : 300 ± 20mVp-p		
Step 3. SW704 → OFF Note: The Chroma Super Limiter Function is not used at this time.					

12-20. Y DROP OUT DETECTION LEVEL ADJUSTMENT (FOR AU-65/62 NTSC & PAL)

(W3 MOD & DEMOD)

TEST POINT	MODE	TAPE USED	M.EQ.	INPUT SIGNAL	ADJUSTMENT
TP307 TP315	JOG (STILL)	ALIGNMENT TAPE COLOR BAR	OSCILLOSCOPE	-------	VR320 (D.O. DET)

Step 1. MACHINE CONDITION	SW304 → OFF MODE : JOG (STOP) in the Color Bar portion.
Step 2. 1. Place the unit in the JOG STILL mode.	
Step 3. 1. SCOPE CH1 : TP307 SCOPE CH2 : TP315 2. Adjust VR320 so that the DO pulses appear when level A is 50 ± 5mVp-p at TP307. 3. Finally reset SW304 to "ON".	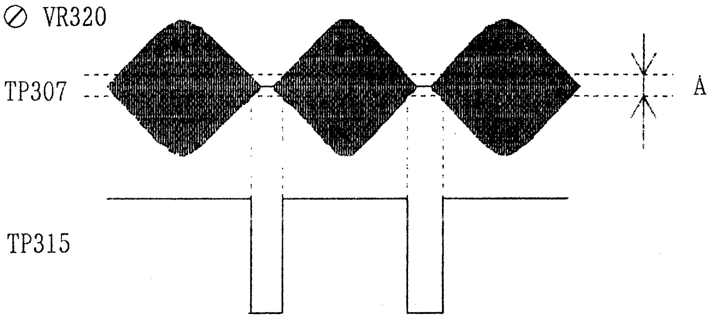 A = 50 ± 5mVp-p

12-21.Y DROP OUT DETECTION LEVEL ADJUSTMENT (FOR AU-63 NTSC & PAL)

(W3 MOD & DEMOD)

TEST POINT	MODE	TAPE USED	M.EQ.	INPUT SIGNAL	ADJUSTMENT
TP307 TP315	PLAY	ALIGNMENT TAPE COLOR BAR	OSCILLOSCOPE	-------	VR317 (LIM IN RF LEV) VR320 (D.O. DET)

Step 1. MACHINE CONDITION	SW304 → OFF
Step 2. 1. SCOPE : TP307 2. Adjust VR317 so that the RF level (A) becomes 50 ± 5mVp-p as shown in figure.	⊘ VR317 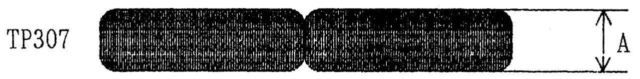 A = 50 ± 5mVp-p
Step 3. 1. SCOPE SETTING : 1) Set GND LEVEL 2) Set AC Mode 2. SCOPE : TP315 3. Adjust VR320 so that level (A) equals level (B). 4. After that adjust VR317 so that the RF level becomes 300 ± 20mVp-p at TP307. 5. SW304 → ON	⊘ VR320 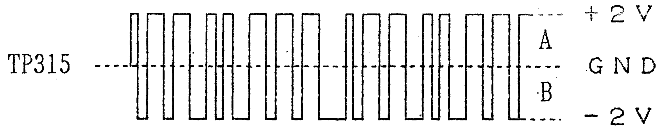 A = B

12-22. C DROP OUT DETECTION LEVEL ADJUSTMENT (FOR AU-65/62 NTSC & PAL)

(W3 MOD & DEMOD)

TEST POINT	MODE	TAPE USED	M.EQ.	INPUT SIGNAL	ADJUSTMENT
TP703 TP705	JOG (STILL)	ALIGNMENT TAPE COLOR BAR	OSCILLOSCOPE	-------	VR717 (D.O. DET)

Step 1.

MACHINE CONDITION

SW704 → OFF
MODE : JOG (STOP) at Color Bar portion.

Step 2.

1. Place the unit in the JOG STILL mode.

Step 3.

1. SCOPE CH1 : TP703
   SCOPE CH2 : TP705
2. Adjust VR717 so that the DO pulses are appeared when level A of TP703 is 50 ± 5mVp-p.
3. SW704 : NTSC : OFF
   PAL : ON

Note [NTSC]:
The Chroma Super Limiter Function is not used at this time in NTSC model.

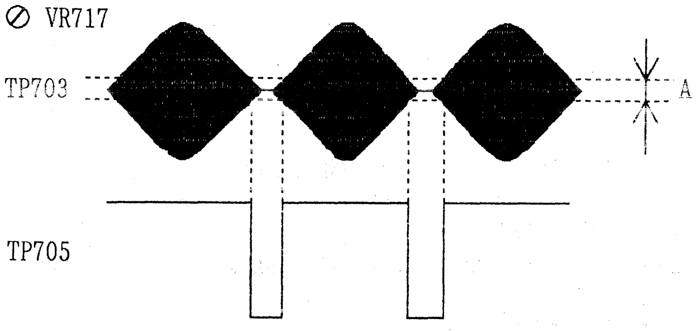

A = 50 ± 5mVp-p

12-23. C DROP OUT DETECTION LEVEL ADJUSTMENT (FOR AU-63 NTSC & PAL)

(W3 MOD & DEMOD)

TEST POINT	MODE	TAPE USED	M.EQ.	INPUT SIGNAL	ADJUSTMENT
TP703 TP705	PLAY	ALIGNMENT TAPE COLOR BAR	OSCILLOSCOPE	-------	VR714 (LIM IN RF LEV) VR717 (D.O. DET)

Step 1. MACHINE CONDITION	SW704 → OFF
Step 2. 1. SCOPE : TP703 2. Adjust VR714 so that the RF level (A) becomes 50 ± 5mVp-p as shown in figure.	⊘ VR714 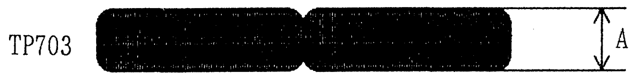 A = 50 ± 5mVp-p
Step 3. 1. SCOPE SETTING : AC Mode 2. SCOPE : TP705 3. Adjust VR717 so that (A) level equals (B) level. 4. After that adjust VR714 so that the RF level becomes 300 ± 20mVp-p at TP703.	⊘ VR717 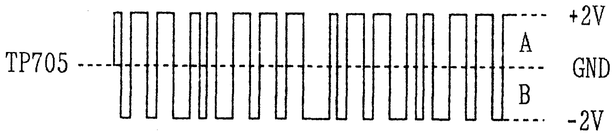
Step 4. SW704 : NTSC : OFF PAL : ON Note [NTSC] : The Chroma Super Limiter Function is is not used in NTSC model.	

12-24. TRACKING METER ADJUSTMENT
(FOR AU-65/63/62 NTSC & PAL)

(W3 MOD & DEMOD)

TEST POINT	MODE	TAPE USED	M.EQ.	INPUT SIGNAL	ADJUSTMENT
TRACKING METER	PLAY	ALIGNMENT COLOR BAR	--------	-------	VR312

1. Adjust VR312 so that the TRACKING METER indicates 100% point.

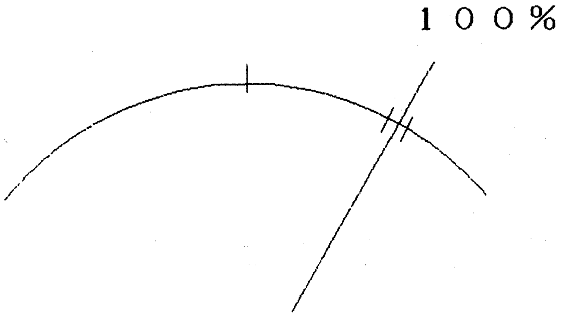

12-2 . Y S/H PULSE ADJUSTMENT
(FOR AU-65/63/62 PAL)

(W3 MOD & DEMOD)

TEST POINT	MODE	TAPE USED	M.EQ.	INPUT SIGNAL	ADJUSTMENT
TP312 TP313	PLAY	ALIGNMENT SWEEP	OSCILLOSCOPE	-------	VR331 (S/H POS)

Note:
This adjustment is PAL model only.

1. Adjust VR311 as shown in figure.

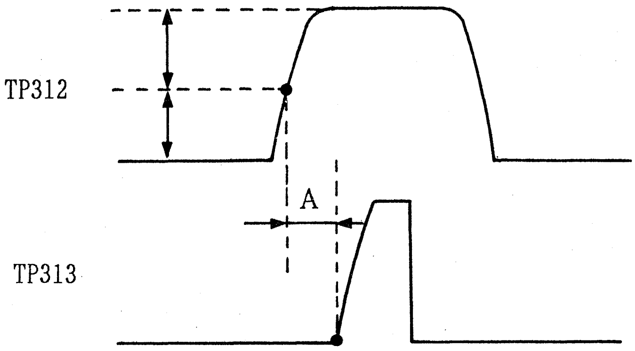

⊘ VR311
A = 0.8 ± 0.1 μsec.

12-26. Y 3.375MHz B.P.F ADJUSTMENT (FOR AU-65/63/62 PAL)

(W3 MOD & DEMOD)

TEST POINT	MODE	TAPE USED	M.EQ.	INPUT SIGNAL	ADJUSTMENT
TP312	PLAY	ALIGNMENT SWEEP	OSCILLOSCOPE	-------	VL303 (VR326)

Note:
This adjustment is PAL model only.

Step 1.

1. Connect the scope TP312 and set VR326 so that signal level at TP312 is minimum.
2. Adjust VL303 so that the signal peak is 3.375MHz.

12-27. Y AUTO EQ FREQUENCY CHARACTERISTIC ADJUSTMENT (1) (FOR AU-65/62 PAL)

(W3 MOD & DEMOD)

TEST POINT	MODE	TAPE USED	M.EQ.	INPUT SIGNAL	ADJUSTMENT
TP317 COMPONENT Y OUT	PLAY	ALIGNMENT SWEEP	OSCILLOSCOPE AND WAVE FORM MONITOR	-------	VR326 (A EQ PS) VR329 (A EQ R/P BAL)

Note:
This adjustment is PAL model only.

Step 1.

1. Set the machine condition SW306 "ON" and SW305 "OFF" mode.

SW306 ―――――→ ON
(A EQ SW)
SW305 ―――――→ OFF
(A EQ VAR)

Step 2.

1. Set the oscilloscope DC mode and playback alignment tape sweep portion.
2. Adjust VR329 and VR326 so that the channel DC difference is minimum (less than 0.5V) and center level of DC difference is GND at TP317.

TP317

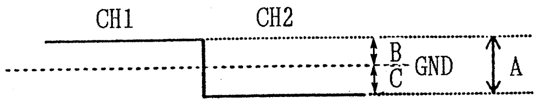

⊘ VR329 A = MINIMUM
⊘ VR326 B = C

Step 3. 1. Confirm COMPONENT Y OUT waveform by waveform monitor so that the frequency characteristic is not change with SW306 "ON" and "OFF". 2. If it is not same frequency characteristic with SW306 "ON" and "OFF", readjust Step 2.	
Step 4. 1. After adjustment reset the SW305 and the SW306 user setting mode. Note: Initial setting in factory is SW305 and SW306 "OFF" mode.	SW305, SW306 → USER SETTING MODE

12-28. Y AUTO EQ FREQUENCY CHARACTERISTIC ADJUSTMENT (2) (FOR AU-63 PAL)

(W3 MOD & DEMOD)

TEST POINT	MODE	TAPE USED	M.EQ.	INPUT SIGNAL	ADJUSTMENT
TP317 COMPONENT Y OUT	PLAY	ALIGNMENT SWEEP	OSCILLOSCOPE AND WAVE FORM MONITOR	-------	VR326 (A EQ PS) VR330 (A EQ DT BAL)

Note: This adjustment is PAL model only.	
Step 1. 1. Set the machine condition SW306 "ON" and SW305 "OFF" mode.	SW306 ————→ ON (A EQ SW) SW305 ————→ OFF (A EQ VAR)
Step 2. 1. Set the oscilloscope DC mode and playback alignment tape sweep portion. 2. Adjust VR330 and VR326 so that the channel DC difference is minimum (less than 0.5V) and center level of DC difference is GND at TP317.	TP317 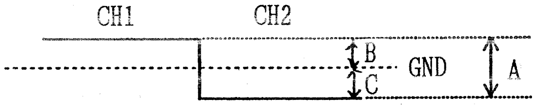 ⊘ VR330 A = MINIMUM ⊘ VR326 B = C
Step 3. 1. Confirm COMPONENT Y OUT waveform by waveform monitor so that the frequency characteristic is not change with SW306 "ON" and "OFF". 2. If it is not same frequency characteristic with SW306 "ON" and "OFF", readjust Step 2.	
Step 4. 1. After adjustment reset the SW305 and the SW306 user setting mode. Note: Initial setting in factory is SW305 and SW306 "OFF" mode.	SW305, SW306 → USER SETTING MODE

12-29. Y AUTO EQ V MODE CONFIRMATION (FOR AU-65/63/62 PAL)

(W3 MOD & DEMOD)

TEST POINT	MODE	TAPE USED	M.EQ.	INPUT SIGNAL	ADJUSTMENT
COMPONENT Y OUT	PLAY	ALIGNMENT SWEEP	WAVEFORM MONITOR	-------	VR327 (A EQ V)

Note:
This adjustment is PAL model only.

1. Set the machine condition SW306 and SW305 "ON" mode.
2. Confirm so that frequency characteristic is able to be changed by VR327.
3. After adjustment, reset the SW306 and SW305 user setting mode.

12-30. Y SELF RECODING AUTO EQ FREQUENCY CHARACTERISTIC COMFIRMATION (FOR AU-65 PAL)

(W3 MOD & DEMOD)

TEST POINT	MODE	TAPE USED	M.EQ.	INPUT SIGNAL	ADJUSTMENT
TP317 (on W3 P.C.Board) CONPONENT Y OUT	REC ↓ PLAY	BLANK TAPE	OSCILLOSCOPE AND WAVEFORM MONITOR	COMPONENT 60% SWEEP	VR503 (Y BU LEV.) (on W4 P.C.Board)

Note:
This adjustment AU-65 PAL only.

Step 1.

1. Set the machine condition SW306 "ON" and SW305 "OFF" mode.

SW306 ⟶ ON
(A EQ SW)
SW305 ⟶ OFF
(A EQ VAR)

Step 2.

1. Make a recording sweep signal.
2. Then playback the just recording portion.
3. Connect the scope to TP317 and confirm that DC level difference is less than 1V and center point of the DC level difference is GND.

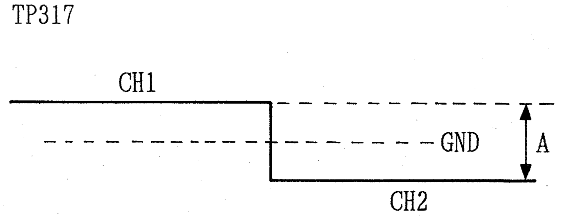

A = Less than 1V

Step 3. 1. Connect the waveform monitor to COMPONENT Y OUT and confirm that the frequency characteristic is same with SW306 "ON" and "OFF". 2. If it is not same frequency characteristic, adjust VR503 so that the selfrecording and playback frequency characteristic with SW306 "ON" and "OFF" is same.	
Step 4. 1. However if the frequency characteristic is unbalance between CH1 and CH2, adjust VR503 so that the frequency characteristic of two channels average with SW306 "ON" and with SW306 "OFF" are same. And adjust recording current without channels difference. 2. When Step 4 adjustment is done readjust recording frequency adjustment.	

12-31. C S/H PULSE ADJUSTMENT (FOR AU-65/63/62 PAL)

(W3 MOD & DEMOD)

TEST POINT	MODE	TAPE USED	M.EQ.	INPUT SIGNAL	ADJUSTMENT
TP709 TP710	PLAY	ALIGNMENT SWEEP	OSCILLOSCOPE	-------	VR726 (S/H POS)

Note:
This adjustment is PAL model only.

1. Adjust VR726 as shown in figure.

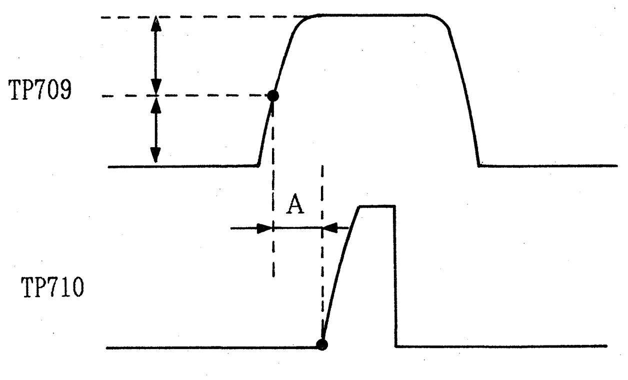

A = 0.5 ± 0.1μ sec.

12-32.C AUTO EQ FREQUENCY CHARACTERISTIC ADJUSTMENT (FOR AU-65/63/62 PAL)

(W3 MOD & DEMOD)

TEST POINT	MODE	TAPE USED	M.EQ.	INPUT SIGNAL	ADJUSTMENT
TP712 COMPONENT Pb OUT	PLAY	ALIGNMENT SWEEP	OSCILLOSCOPE AND WAVEFORM MONITOR	-------	VR723 (A EQ PS) VR725 (A EQ BAL)

Note: This adjustment is PAL model only.	
Step 1. 1. Set the machine condition SW306 "ON" and SW305 "OFF".	SW306 ——→ ON (A EQ SW) SW305 ——→ OFF (A EQ VAR)
Step 2. 1. Set the oscilloscope DC mode and playback alignment tape sweep portion. 2. Adjust VR725 and VR723 so that the channel DC difference is minimum (less than 0.5V) and center level of DC difference is GND at TP721.	TP712 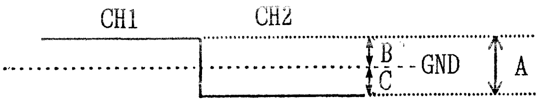 ⊘ VR725 A = MINIMUM ⊘ VR723 B = C
Step 3. 1. Confirm COMPONENT Pb OUT waveform by waveform monitor so that the frequency characteristic is not change with SW306 "ON" and "OFF". 2. If it is not same frequency characteristic with SW306 "ON" and "OFF", readjust Step 2.	
Step 4. 1. After adjustment reset the SW305 and the SW306 user setting mode. Note: Initial setting in factory is SW305 and SW306 "OFF".	SW305, SW306 → USER SETTING MODE

12-33. C AUTO EQ V MODE CONFIRMATION (FOR AU-65/63/62 PAL)

(W3 MOD & DEMOD)

TEST POINT	MODE	TAPE USED	M.EQ.	INPUT SIGNAL	ADJUSTMENT
COMPONENT Pb OUT	PLAY	ALIGNMENT SWEEP	WAVEFORM MONITOR	-------	VR724 (A EQ V)

Note:
This adjustment is PAL model only.

1. Set the machine condition SW306 and SW305 "ON" mode.
2. Confirm so that frequency characteristic is able to be change by VR724
3. After adjustment, reset the SW306 and SW305 user setting mode.

12-34. C SELF RECODING AUTO EQ FREQUENCY CHARACTERISTIC COMFIRMATION (FOR AU-65 PAL)

(W3 MOD & DEMOD)

TEST POINT	MODE	TAPE USED	M.EQ.	INPUT SIGNAL	ADJUSTMENT
TP712 (on W3 P.C.Board) CONPONENT Pb OUT	REC ↓ PLAY	BLANK TAPE	OSCILLOSCOPE AND WAVEFORM MONITOR	COMPONENT 60% SWEEP	VR504 (C BU LEV.) (on W4 P.C.Board)

Note: This adjustment AU-65 PAL only.	
Step 1. 1. Set the machine condition SW306 "ON" and SW305 "OFF" mode.	SW306 -----→ ON (A EQ SW) SW305 -----→ OFF (A EQ VAR)
Step 2. 1. Make a recording sweep signal. 2. Then playback the just recording portion. 3. Connect the scope to TP712 and confirm that DC level difference is less than 1V and center point of the DC level difference is GND.	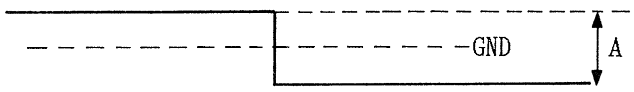 A = Less than 1V
Step 3. 1. Connect the waveform monitor to COMPONENT Pb OUT and confirm that the frequency characteristic is same with SW306 "ON" and "OFF". 2. If it is not same frequency characteristic, adjust VR504 so that the selfrecording and playback frequency characteristic with SW306 "ON" and "OFF" is same.	
Step 4. 1. However if the frequency characteristic is unbalance between CH1 and CH2, adjust VR504 so that the frequency characteristic of two channels average with SW306 "ON" and with SW306 "OFF" are same. And adjust recording current without channels difference. 2. When Step 4 adjustment is done readjust recording frequency adjustment.	
Step 5. 1. After adjustment reset the SW305 and the SW306 user setting mode. Note: Initial setting in factory is SW305 and SW306 "OFF".	SW305, SW306 → USER SETTING MODE

13. DECODER & CTCM (W4) BOARD (2/2)

DECODER & CTCM SECTION (2/2) (W4) FLOWCHART FOR AU-65

∗ BEFORE ADJUSTMENT
The adjustment with this comment is necessary to adjust after the following adjustments are completed.

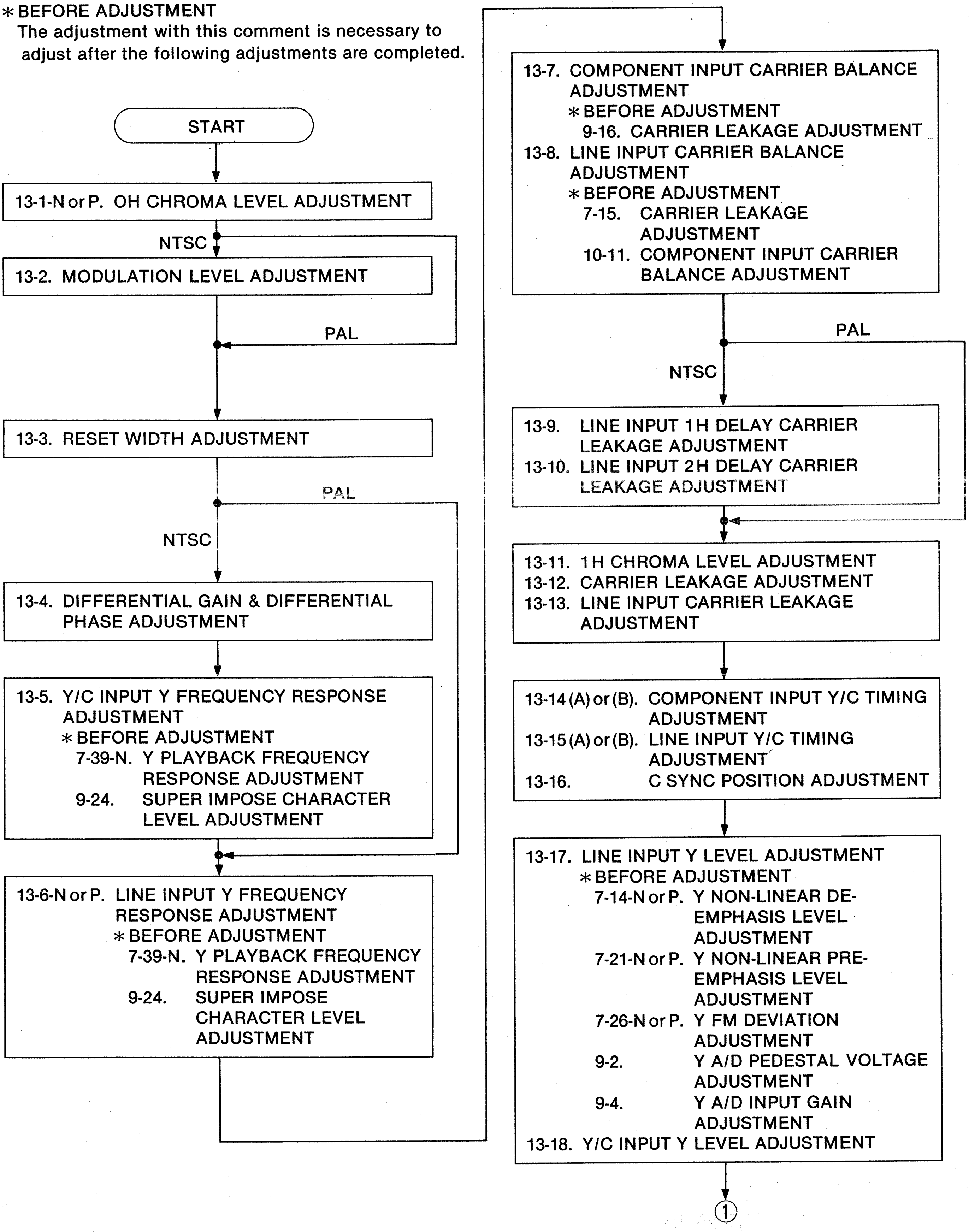
START
13-1-N or P. OH CHROMA LEVEL ADJUSTMENT
NTSC
13-2. MODULATION LEVEL ADJUSTMENT
PAL
13-3. RESET WIDTH ADJUSTMENT
PAL
NTSC
13-4. DIFFERENTIAL GAIN & DIFFERENTIAL PHASE ADJUSTMENT
13-5. Y/C INPUT Y FREQUENCY RESPONSE ADJUSTMENT
∗ BEFORE ADJUSTMENT
7-39-N. Y PLAYBACK FREQUENCY RESPONSE ADJUSTMENT
9-24. SUPER IMPOSE CHARACTER LEVEL ADJUSTMENT
13-6-N or P. LINE INPUT Y FREQUENCY RESPONSE ADJUSTMENT
∗ BEFORE ADJUSTMENT
7-39-N. Y PLAYBACK FREQUENCY RESPONSE ADJUSTMENT
9-24. SUPER IMPOSE CHARACTER LEVEL ADJUSTMENT
13-7. COMPONENT INPUT CARRIER BALANCE ADJUSTMENT
∗ BEFORE ADJUSTMENT
9-16. CARRIER LEAKAGE ADJUSTMENT
13-8. LINE INPUT CARRIER BALANCE ADJUSTMENT
∗ BEFORE ADJUSTMENT
7-15. CARRIER LEAKAGE ADJUSTMENT
10-11. COMPONENT INPUT CARRIER BALANCE ADJUSTMENT
PAL
NTSC
13-9. LINE INPUT 1 H DELAY CARRIER LEAKAGE ADJUSTMENT
13-10. LINE INPUT 2 H DELAY CARRIER LEAKAGE ADJUSTMENT
13-11. 1 H CHROMA LEVEL ADJUSTMENT
13-12. CARRIER LEAKAGE ADJUSTMENT
13-13. LINE INPUT CARRIER LEAKAGE ADJUSTMENT
13-14 (A) or (B). COMPONENT INPUT Y/C TIMING ADJUSTMENT
13-15 (A) or (B). LINE INPUT Y/C TIMING ADJUSTMENT
13-16. C SYNC POSITION ADJUSTMENT
13-17. LINE INPUT Y LEVEL ADJUSTMENT
∗ BEFORE ADJUSTMENT
7-14-N or P. Y NON-LINEAR DE-EMPHASIS LEVEL ADJUSTMENT
7-21-N or P. Y NON-LINEAR PRE-EMPHASIS LEVEL ADJUSTMENT
7-26-N or P. Y FM DEVIATION ADJUSTMENT
9-2. Y A/D PEDESTAL VOLTAGE ADJUSTMENT
9-4. Y A/D INPUT GAIN ADJUSTMENT
13-18. Y/C INPUT Y LEVEL ADJUSTMENT
①

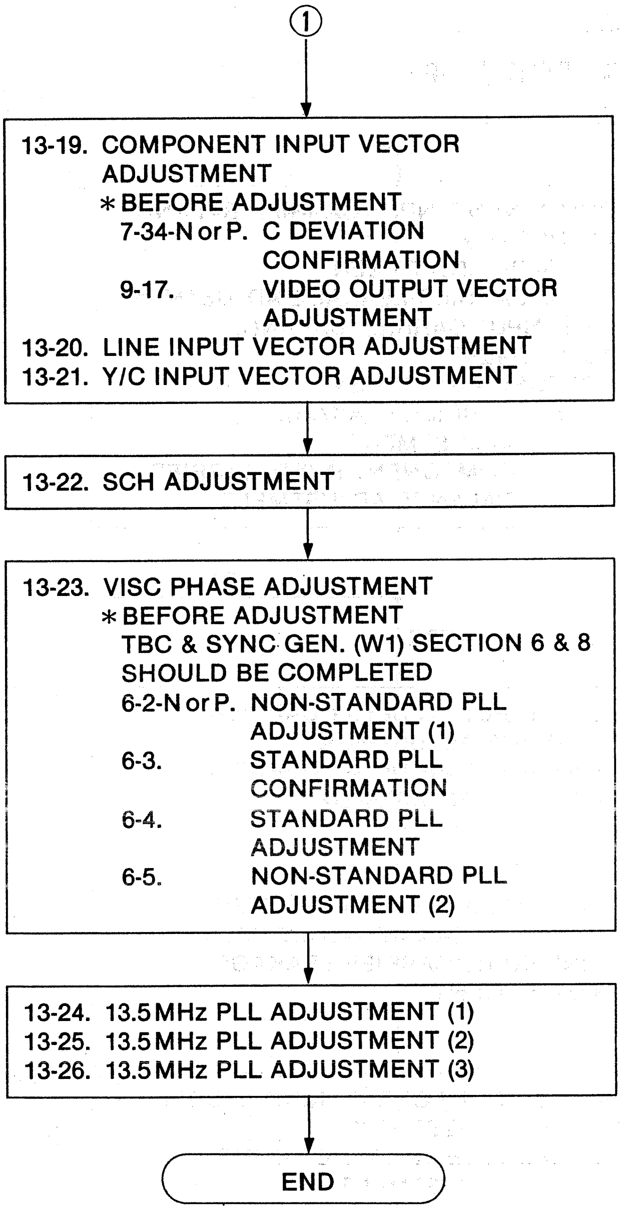
①
13-19. COMPONENT INPUT VECTOR ADJUSTMENT
＊BEFORE ADJUSTMENT
7-34-N or P. C DEVIATION CONFIRMATION
9-17. VIDEO OUTPUT VECTOR ADJUSTMENT
13-20. LINE INPUT VECTOR ADJUSTMENT
13-21. Y/C INPUT VECTOR ADJUSTMENT
13-22. SCH ADJUSTMENT
13-23. VISC PHASE ADJUSTMENT
＊BEFORE ADJUSTMENT
TBC & SYNC GEN. (W1) SECTION 6 & 8 SHOULD BE COMPLETED
6-2-N or P. NON-STANDARD PLL ADJUSTMENT (1)
6-3. STANDARD PLL CONFIRMATION
6-4. STANDARD PLL ADJUSTMENT
6-5. NON-STANDARD PLL ADJUSTMENT (2)
13-24. 13.5MHz PLL ADJUSTMENT (1)
13-25. 13.5MHz PLL ADJUSTMENT (2)
13-26. 13.5MHz PLL ADJUSTMENT (3)
END

13. DECODER & CTCM (W4) BOARD (2/2)

13-1-N. OH CHROMA LEVEL ADJUSTMENT (FOR AU-65 NTSC)

(W4 DEC & CTCM)

TEST POINT	MODE	TAPE USED	M.EQ.	INPUT SIGNAL	ADJUSTMENT
TP3	E-E (EJECT)	-------	OSCILLOSCOPE	LINE INPUT 75% COLOR BAR	VR1 (INPUT LEV.)

Step 1.

1. SCOPE : TP3

2. Adjust VR1 so that the level (A) is 0.8 ± 0.01Vp-p as shown in figure.

NOTE:
BAND WIDTH FILTER of SCOPE = 20MHz

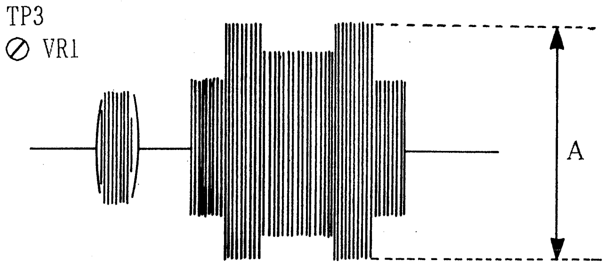

A = 0.8 ± 0.01Vp-p

13-1-P. OH CHROMA LEVEL ADJUSTMENT (FOR AU-65 PAL)

(W4 DEC & CTCM)

TEST POINT	MODE	TAPE USED	M.EQ.	INPUT SIGNAL	ADJUSTMENT
TP3	E-E (EJECT)	-------	OSCILLOSCOPE	LINE INPUT 100% COLOR BAR	VR1 (INPUT LEV.)

Step 1.

1. SCOPE : TP3

2. Adjust VR1 so that the level (A) is 1.14 ± 0.01Vp-p as shown in figure.

Note:
BAND WIDTH FILTER of SCOPE = 20MHz

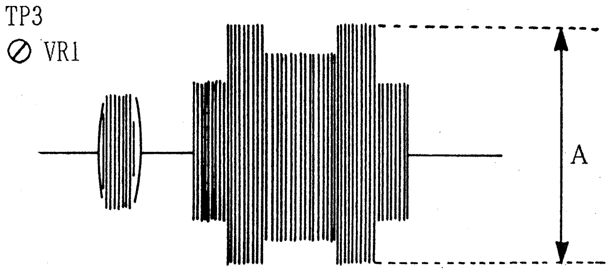

A = 1.14 ± 0.01Vp-p

13-2. MODULATION LEVEL ADJUSTMENT
(FOR AU-65 NTSC)

(W4 DEC & CTCM)

TEST POINT	MODE	TAPE USED	M.EQ.	INPUT SIGNAL	ADJUSTMENT
TP1	E-E (EJECT)	-------	OSCILLOSCOPE	LINE INPUT 75% COLOR BAR	VR2 (MOD. LEV.)

Note:
This adjustment is NTSC only.

Step 1.

1. SCOPE : TP1
2. Adjust VR2 so that the level (A) is 0.6 ± 0.01Vp-p as shown in figure.

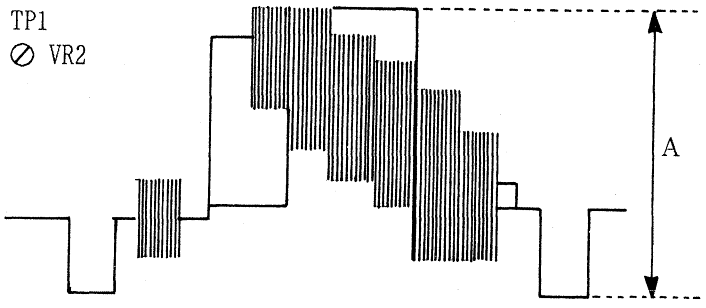

A = 0.6 ± 0.01Vp-p

13-3. RESET WIDTH ADJUSTMENT
(FOR AU-65 NTSC & PAL)

(W4 DEC & CTCM)

TEST POINT	MODE	TAPE USED	M.EQ.	INPUT SIGNAL	ADJUSTMENT
IC401 Pin 12	E-E (EJECT)	-------	OSCILLOSCOPE	LINE INPUT COLOR BAR	VR403 (RSTW)

Step 1.

1. SCOPE : IC401
2. Adjust VR403 so that the pulse width (A) is 4.0 ± 0.05 μsec as shown in figure.

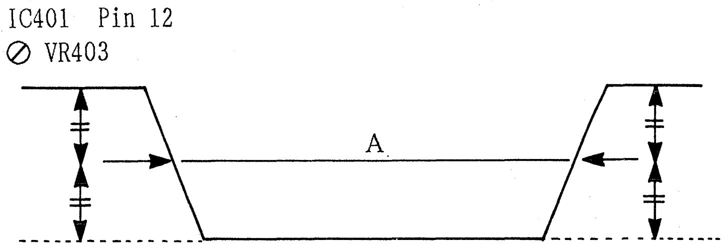

A = 4.0 ± 0.05μsec

13-4. DIFFERENCIAL GAIN & DIFFERENCIAL PHASE ADJUSTMENT (FOR AU-65 NTSC)

(W4 DEC & CTCM)

TEST POINT	MODE	TAPE USED	M.EQ.	INPUT SIGNAL	ADJUSTMENT
TP501 TP502	E-E (EJECT)	-------	OSCILLOSCOPE	COMPOSITE 80IRE MOD. RAMP TO LINE INPUT	VR3 (LIN.)

Note:
This adjustment is NTSC only.

Step 1.

1. SCOPE CH1 : TP501
   SCOPE CH2 : TP502
2. Adjust VR3 so that the B and C are flat.
3. Confirm that the B and C are less than 1.5% against the level (A).
4. If it is not, readjust VR3.

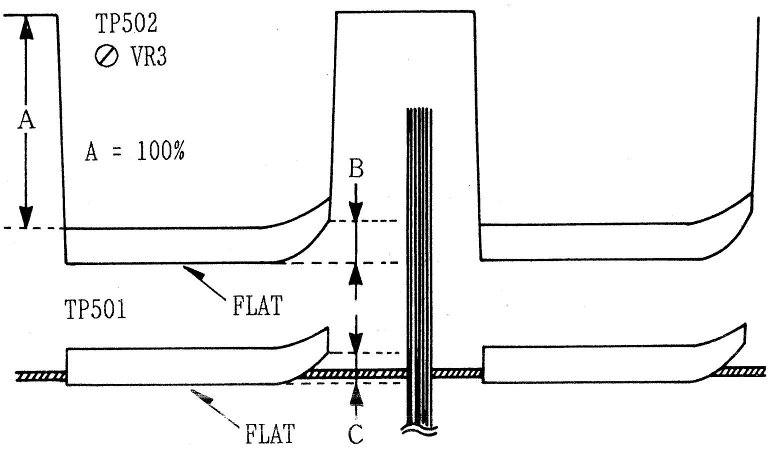

B = C = Less than 1.5%

13-5. Y/C INPUT Y FREQUENCY RESPONSE ADJUSTMENT (FINE) (FOR AU-65 NTSC)

(W4 DEC & CTCM)

TEST POINT	MODE	TAPE USED	M.EQ.	INPUT SIGNAL	ADJUSTMENT
COMPONENT Y OUT	E-E (EJECT)	-----	WAVEFORM MONITOR OR SCOPE	H SWEEP (Y/C INPUT)	VC201 (Y/C FREQ. RESP.)

Note:
This adjustment is NTSC only.

Step 1.

MACHINE CONDITION

1. INPUT SELECT : Y/C side
   (on Pull Out Drawer)
2. YC/COMPONENT SELECT : YC side
   (on Front Sub Panel)

Step 2.

The following adjustments should be completed before this adjustment.
1) 7-39-N Y PLAYBACK FREQUENCY RESPONSE ADJ. (W3)
2) 9-24 Y OUT FREQUENCY RESPONSE ADJ. (W2)

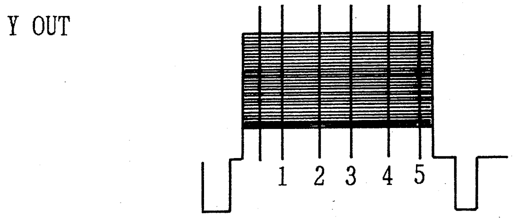

0.1MHz : 4MHz = 100 : 100 ± 2

13-6-N. LINE INPUT Y FREQUENCY RESPONSE ADJUSTMENT (FINE) (FOR AU-65 NTSC)

(W4 DEC & CTCM)

TEST POINT	MODE	TAPE USED	M.EQ.	INPUT SIGNAL	ADJUSTMENT
COMPONENT Y OUT	E-E (EJECT)	-----	WAVEFORM MONITOR OR SCOPE	H SWEEP (LINE INPUT)	VC1 (FREQ)

Note:
This adjustment is NTSC mode only.

Step 1.
MACHINE CONDITION

INPUT SELECT : LINE

Step 2.
Note:
The following adjustments should be completed before this adjustment.
1) 7-39-N Y PLAYBACK FREQUENCY RESPONSE ADJ. (W3)
2) 9-24 Y OUT FREQUENCY RESPONSE ADJ. (W2)
3) 13-5 Y/C INPUT Y FREQUENCY RESPONSE ADJ. (W4)

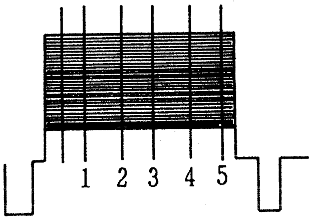

0.1MHz : 4MHz = 100 : 100 ± 2

13-6-P. LINE INPUT Y FREQUENCY RESPONSE ADJUSTMENT (FINE) (FOR AU-65 PAL)

(W4 DEC & CTCM)

TEST POINT	MODE	TAPE USED	M.EQ.	INPUT SIGNAL	ADJUSTMENT
VIDEO 2 OUT	E-E (EJECT)	-----	WAVEFORM MONITOR OR SCOPE	SWEEP (LINE INPUT)	VC201 (Y FREQ)

Step 1.
MACHINE CONDITION

INPUT SELECT : LINE

Connect a jumper wire between F15 and GND on W2 P.C.Board to out chroma signal.

Step 2.

Note:
The following adjustments should be completed before this adjustment.
1) 7-39-P Y PLAYBACK FREQUENCY RESPONSE ADJ. (W3)
2) 9-24 Y OUT FREQUENCY RESPONSE ADJ. (W2)

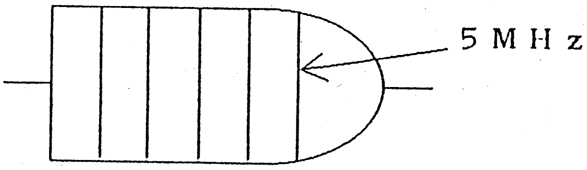

0.1 ~ 5MHz : FLAT (± 1.0dB)

13-7. COMPONENT INPUT CARRIER BALANCE ADJUSTMENT (FINE) (FOR AU-65 NTSC & PAL)

(W4 DEC & CTCM)

TEST POINT	MODE	TAPE USED	M.EQ.	INPUT SIGNAL	ADJUSTMENT
COMPONENT Pr/Pb OUT	E-E (EJECT)	-----	OSCILLOSCOPE	COMPONENT COLOR BAR	VR601 (Pb CLAMP REF) VR602 (Pr CLAMP REF)
Step 1. CARRIER LEAKAGE ADJ. (9-16) (W2) should be completed.			(PR OUT) (PB OUT) 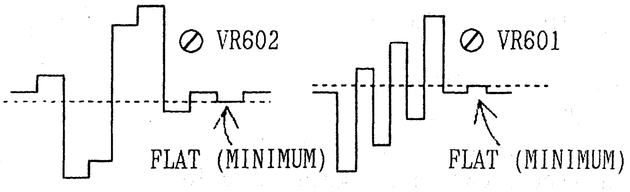 ⊘ VR602 FLAT (MINIMUM) ⊘ VR601 FLAT (MINIMUM)		

13-8. LINE INPUT CARRIER BALANCE ADJUSTMENT (FINE) (FOR AU-65 NTSC & PAL)

(W4 DEC & CTCM)

TEST POINT	MODE	TAPE USED	M.EQ.	INPUT SIGNAL	ADJUSTMENT
COMPONENT Pr/Pb OUT	E-E (EJECT)	-----	WAVEFORM MONITOR	LINE INPUT COLOR BAR	VR216 (Pb BLK DC) VR217 (Pr BLK DC)
Step 1. The following adjustments should be completed before this adjustment. 1) CARRIER LEAKAGE ADJ. (9-16) (W2) 2) COMPONENT INPUT CARRIER BALANCE ADJ. (13-7) (W4)			(PR OUT) (PB OUT) 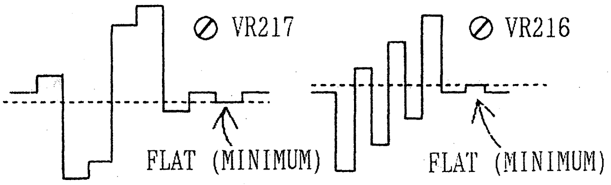 ⊘ VR217 FLAT (MINIMUM) ⊘ VR216 FLAT (MINIMUM)		

13-9. LINE INPUT 1H DELAY CARRIER LEAKAGE ADJUSTMENT (FINE) (FOR AU-65 NTSC)

(W4 DEC & CTCM)

TEST POINT	MODE	TAPE USED	M.EQ.	INPUT SIGNAL	ADJUSTMENT
TP3 TP4	EJECT	-----	OSCILLOSCOPE	LINE INPUT 75% COLOR BAR	VR6 (1H DELAY) VR7 (1H LEV)

Note:
This adjustment is NTSC only.

1. SCOPE CH1 : TP3
   SCOPE CH2 : TP4

Set CH1 & CH2's range to be equal VOLTS/DIV.

2. Set the scope CH2 to INV mode and select ADD mode.
3. Adjust VR6 and VR7 so that the level (A) is minimized as shown in figure.

⊘ VR6, VR7

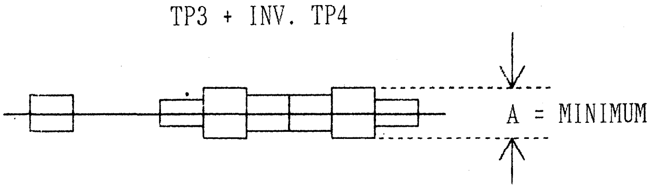

13-10. LINE INPUT 2H DELAY CARRIER LEAKAGE ADJUSTMENT (FINE) (FOR AU-65 NTSC)

(W4 DEC & CTCM)

TEST POINT	MODE	TAPE USED	M.EQ.	INPUT SIGNAL	ADJUSTMENT
TP3 TP5	EJECT	-----	OSCILLOSCOPE	LINE INPUT 75% COLOR BAR	VR8 (2H DELAY) VR9 (2H LEV)

Note:
This adjustment is NTSC only.

1. SCOPE CH1 : TP3
   SCOPE CH2 : TP5

Set CH1 & CH2's range to be equal VOLTS/DIV.

2. Set the scope CH2 to INV mode and select ADD mode.

⊘ VR8, VR9

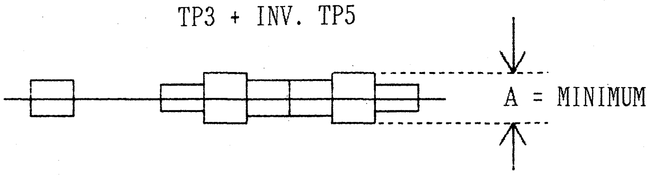

13-11. 1H CHROMA LEVEL ADJUSTMENT
(FOR AU-65 NTSC & PAL)

(W4 DEC & CTCM)

TEST POINT	MODE	TAPE USED	M.EQ.	INPUT SIGNAL	ADJUSTMENT
TP202	E-E (EJECT)	-----	OSCILLOSCOPE	LINE INPUT COLOR BAR (NTSC 75%) (PAL 100%)	VR204 (C LEV.)

Step 1.

1. SCOPE CH1 : TP202

2. Adjust VR204 so that the level (A) is
   NTSC 1.1 ± 0.05Vp-p
   PAL 1.4 ± 0.05Vp-p

Note:
BAND WIDTH FILTER of SCOPE = 20MHz

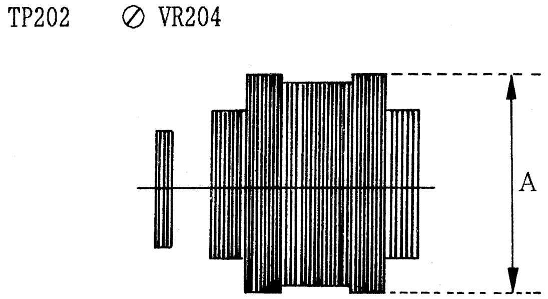

13-12. CARRIER LEAKAGE ADJUSTMENT
(FOR AU-65 NTSC & PAL)

(W4 DEC & CTCM)

TEST POINT	MODE	TAPE USED	M.EQ.	INPUT SIGNAL	ADJUSTMENT
COMPONENT Y OUT	E-E (EJECT)	-----	OSCILLOSCOPE	LINE INPUT COLOR BAR	SW201 VR205 (C REJ.) VR202 (1H V TMG)

Step 1.

MACHINE CONDITION
(STD mode)

1. Set-up Menu No. 1011 → 00 FRONT SWITCH

2. Input signal is standard signal from signal generator.

Step 2.

1. SCOPE CH1 : COMPONENT Y OUT

2. SW201 : ADJ. side

3. Adjust VR205 and VR202 and nullify the carrier leakage.

4. SW201 : NORM side

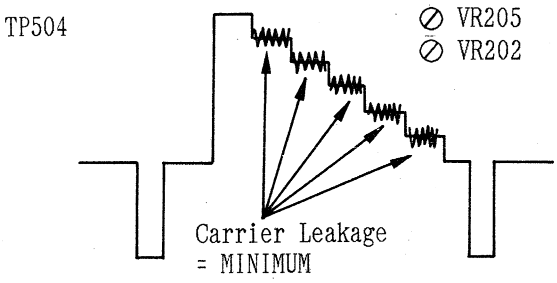

13-13. LINE INPUT CARRIER LEAKAGE ADJUSTMENT (FINE) (3) (FOR AU-65 NTSC & PAL)

(W4 DEC & CTCM)

TEST POINT	MODE	TAPE USED	M.EQ.	INPUT SIGNAL	ADJUSTMENT
COMPONENT Y OUT TP201	E-E (EJECT)	-----	OSCILLOSCOPE	LINE IN COLOR BAR	SW201 VR203 (1H ADJ) VR205 (C REJ) VR202 (1HV TMG) VR10 (NSTD C LEV)

Step 1.

MACHINE CONDITION
(STD mode)

1. Set-up Menu No. 1011 → 00 FRONT SWITCH
2. Input signal is standard signal from signal generator.

Step 2.

1. SCOPE : COMPONENT Y OUT
2. SW201 : NORM side

- Adjust VR203 and VR205 so that the carrier leakage is minimized (Less than 10mVp-p).
- SCOPE : TP201
- Adjust VR202 so that the DC level is 0 ± 0.1Vp-p.

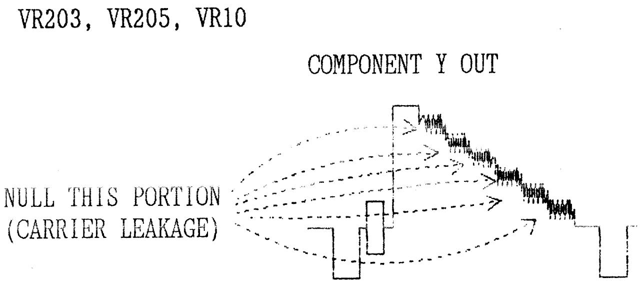

Step 3. (NTSC only)

MACHINE CONDITION
(NSTD mode)

1. Set-up Menu No. 1011 → 01 NON-STD

Step 4. (NTSC only)

1. SCOPE : COMPONENT Y OUT
2. Adjust VR10 so that the carrier leakage is minimized (Less than 10mVp-p).

13-14(A). COMPONENT INPUT Y/C TIMING ADJUSTMENT (FINE) (BY USING WAVEFORM MONITOR) (FOR AU-65 NTSC & PAL)

(W4 DEC & CTCM)

TEST POINT	MODE	TAPE USED	M.EQ.	INPUT SIGNAL	ADJUSTMENT
COMPONENT Y OUT Pb OUT Pr OUT	SELF REC/PLAY	BLANK TAPE	WAVEFORM MONITOR	COMPONENT PULSE & BAR (MOD. 20T)	VR505 (Y/C TMG)

Step 1.

1. WAVEFORM MONITOR CONDITION

RESPONSE : DIFFD STEP
VOLTS FULL SCALE : MAX (UNCAL)
DISPLAY : ×1 (5)
MAGNIFIER : ×50 (0.1)
TRIGGER : VIDEO OUT OF VTR

Step 2.

1. Make a recording, then play back the recorded portion.
2. WFM MONITOR

   CHA : COMPONENT Y OUT

   CHB : COMPONENT Pr (Pb) OUT

   EXT SYNC CH1 : VIDEO OUT
   CH2 : VIDEO OUT

3. COMPONENT OUTPUT CABLE LENGTH : Same Length
4. Observe the falling portion of modulated 20T pulse signal.
5. Adjust the vertical and horizontal position of WFM Monitor so that the center of falling edge is set to 0.3 axis as shown in figure.
6. Change the Input Select of WFM Monitor from A ch (COMPONENT Y OUT) to B ch (COMPONENT Pr OUT).
7. Measure the difference between Y and Pr (Pb) signal timing.
8. If it is not within ± 20nsec, readjust VR505 and repeat item 1 to 8 of Step 2.

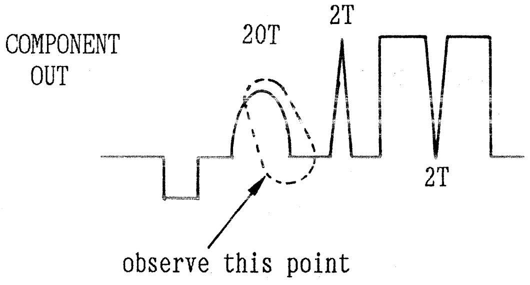

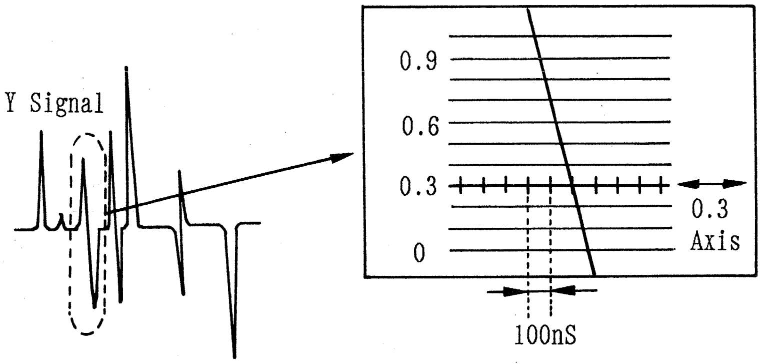

13-14(B). COMPONENT INPUT Y/C TIMING ADJUSTMENT (FINE) (BY USING OSCILLOSCOPE) (FOR AU-65 NTSC & PAL)

(W4 DEC & CTCM)

TEST POINT	MODE	TAPE USED	M.EQ.	INPUT SIGNAL	ADJUSTMENT
COMPONENT Y OUT Pb OUT Pr OUT	SELF REC/PLAY	BLANK TAPE	OSCILLOSCOPE	COMPONENT COLOR BAR	VR505 (Y/C TMG)

Step 1.

1. Make a recording.
2. Then play back the recorded portion.
3. SCOPE CH1 : COMPONENT Y OUT

   SCOPE CH2 : COMPONENT Pr (Pb) OUT

*Note:
COMPONENT OUTPUT CABLE LENGTH
should be the Same Length.

4. Confirm that the Y/C Timing of component output is less than 20nsec.
5. If it is not, readjust VR505 and repeat from item 1 to 4.

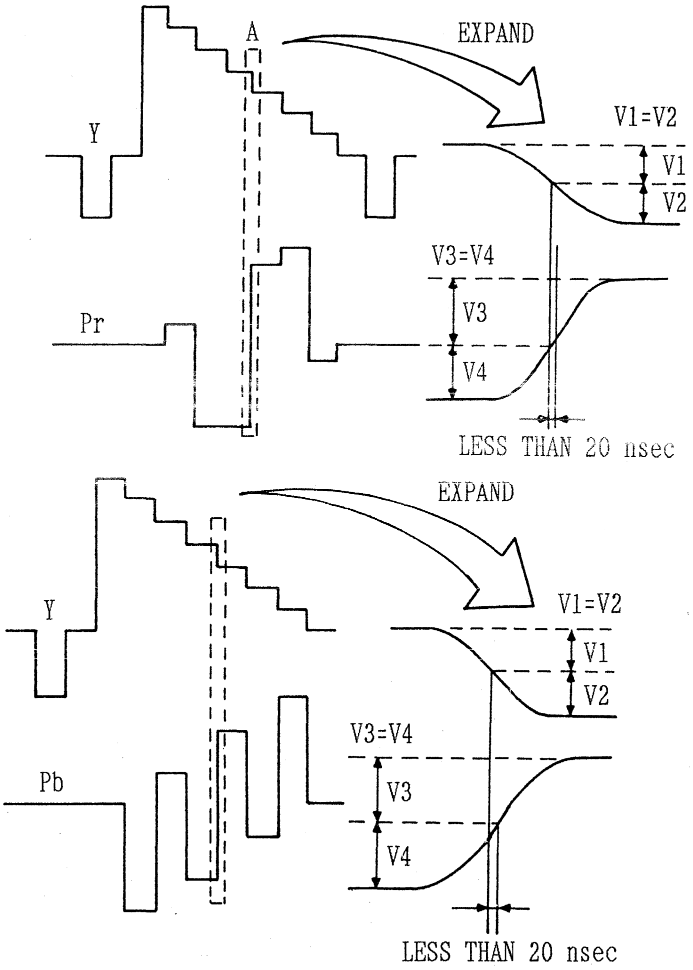
A
EXPAND
Y
V1=V2
V1
V2
Pr
V3=V4
V3
V4
LESS THAN 20 nsec
EXPAND
Y
V1=V2
V1
V2
Pb
V3=V4
V3
V4
LESS THAN 20 nsec

13-15(A). LINE INPUT Y/C TIMING ADJUSTMENT (FINE)
(BY USING WAVEFORM MONITOR)
(FOR AU-65 NTSC & PAL)

(W4 DEC & CTCM)

TEST POINT	MODE	TAPE USED	M.EQ.	INPUT SIGNAL	ADJUSTMENT
COMPONENT Y OUT Pb OUT Pr OUT	SELF REC/PLAY	BLANK TAPE	WAVEFORM MONITOR	LINE IN Mod. 12.5T W/RAMP SIGNAL	VR214 (Pr TMG) VR212 (Pb TMG)

Step 1.

1. WAVEFORM MONITOR CONDITION

RESPONSE : DIFFD STEP
VOLTS FULL SCALE : MAX (UNCAL)
DISPLAY : ×1 (5)
MAGNIFIER : ×50 (0.1)
TRIGGER : VIDEO OUT OF VTR

Step 2.

1. Make a recording then, play back the just recorded portion.
2. WFM MONITOR

   CH A INPUT : COMPONENT Y OUT

   CH B INPUT : COMPONENT Pr (Pb) OUT

   EXT SYNC CH A : VIDEO OUT
   CH B : VIDEO OUT

3. Observe the falling portion of modulated 12.5T pulse signal.
4. Adjust the vertical and horizontal position of WFM Monitor so that the center of falling edge is set to 0.3 axis as shown in figure.
5. Change the Input Select of WFM Monitor from A ch (COMPONENT Y OUT) to B ch (COMPONENT Pr OUT).
6. Measure the difference between Y and Pr (Pb) signal timing.
7. If it is not within ± 20nsec, readjust VR214 (Pr) and VR212 (Pb) and repeat item 1 to 7 of STEP 2.

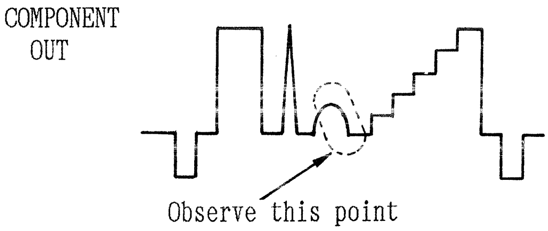

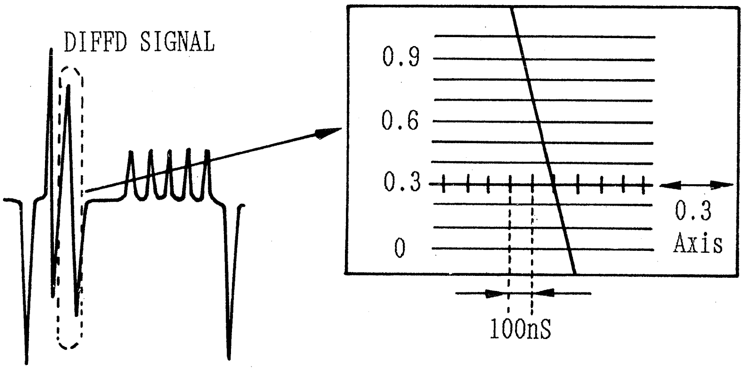

13-15(B). LINE INPUT Y/C TIMING ADJUSTMENT (FINE)
(BY USING OSCILLOSCOPE)
(FOR AU-65 NTSC & PAL)

(W4 DEC & CTCM)

TEST POINT	MODE	TAPE USED	M.EQ.	INPUT SIGNAL	ADJUSTMENT
COMPONENT Y OUT Pb OUT Pr OUT	SELF REC/PLAY	BLANK TAPE	OSCILLOSCOPE	LINE IN COLOR BAR	VR214 (Pr TMG) VR212 (Pb TMG)

Step 1.

1. Make a recording for a few minutes.

2. Play back the just recorded portion.

3. SCOPE CH1 : COMPONENT Y OUT

   SCOPE CH2 : COMPONENT Pr (Pb) OUT

*Note :
COMPONENT OUTPUT CABLE LENGTH should be the Same Length.

4. Confirm that the Y/C Timing of component output is less than 20nse.

5. If it is not, readjust VR214 (Pr), VR212 (Pb) and repeat from item 1 to 4.

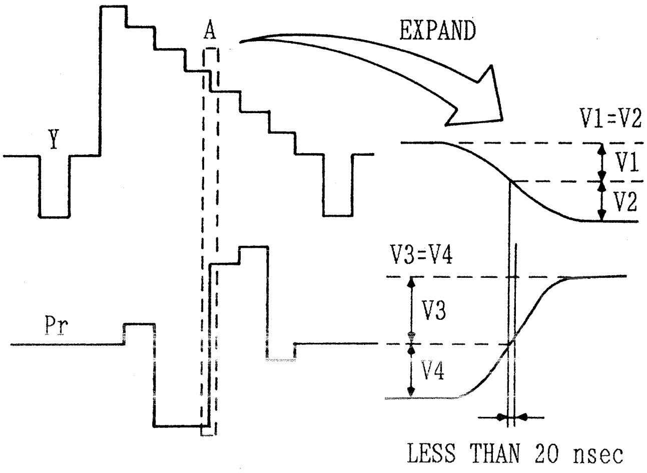
A
EXPAND
Y
V1=V2
V1
V2
V3=V4
Pr
V3
V4
LESS THAN 20 nsec

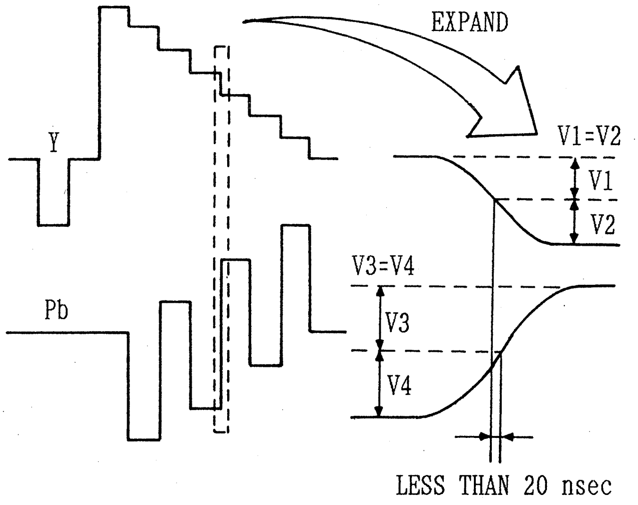
EXPAND
Y
V1=V2
V1
V2
V3=V4
Pb
V3
V4
LESS THAN 20 nsec

13-16. C SYNC POSITION ADJUSTMENT (FINE)
(FOR AU-65 NTSC & PAL)

(W4 DEC & CTCM)

TEST POINT	MODE	TAPE USED	M.EQ.	INPUT SIGNAL	ADJUSTMENT
TP601 TP704	E-E (EJECT)	------	OSCILLOSCOPE	COMPONENT COLOR BAR	VR704 (C SY POS)

Step 1. MACHINE CONDITION (STD mode)	1. Set-up Menu No. 1011 → 00 FRONT SWITCH 2. Input signal is standard signal from signal generator.
Step 2. 1. SCOPE CH1 : TP601 SCOPE CH2 : TP704 2. Delay the scope at C Sync and Burst portion. 3. Adjust VR704 so that the B period is 18 cycles ± 5 nsec. Note: When the scope CH1 and CH2 is connected to TP601 and TP704 at the same time, a beat noise occurs the waveform. Please measure the period "A" separately.	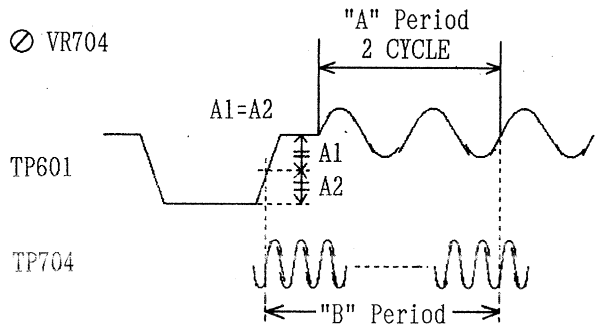 ⊘ VR704 "A" Period 2 CYCLE A1=A2 A1 A2 TP601 TP704 "B" Period "B" = 18 cycles ± 5 nsec

13-17. LINE INPUT Y LEVEL ADJUSTMENT (FINE)
(FOR AU-65 NTSC & PAL)

(W4 DEC & CTCM)

TEST POINT	MODE	TAPE USED	M.EQ.	INPUT SIGNAL	ADJUSTMENT
VIDEO 2 OUT	E-E (EJECT)	------	WAVEFORM MONITOR	LINE IN COLOR BAR (NTSC 75%) (PAL 100%)	VR207 (Y LEV)

Step 1. MACHINE CONDITION	The following adjustments should be completed before this adjustment is done. Please confirm them. 1) Y NON LINEAR DE-EMPHASIS LEVEL (7-14-N or P) 2) Y NON LINEAR PRE-EMPHASIS LEVEL (7-21-N or P) 3) Y FM DEVIATION (7-26-N or P) 4) Y A/D PEDESTAL VOLTAGE (9-2) 5) Y A/D INPUT GAIN (9-4) 6) VIDEO 2 OUT LEVEL (9-13) 7) OH CHROMA LEVEL (13-1-N or P)

Step 2. [NTSC] 1. VIDEO VR : Push In to PRESET POSITION 2. Adjust VR207 so that the Video Level (V) becomes 0.714 ± 0.007Vp-p.	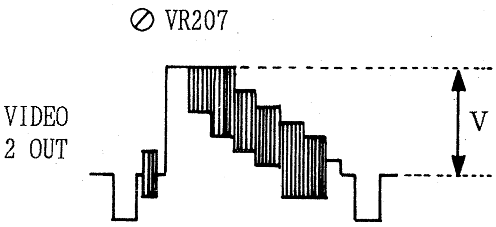 NTSC V = 0.714V
Step 2 [PAL] 1. VIDEO VR : Push In to PRESET POSITION 2. Adjust VR207 so that the Video Level (V) becomes 0.7V ± 0.007Vp-p.	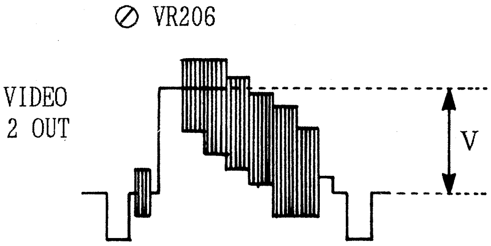 PAL V = 0.7V

13-18. Y/C INPUT Y LEVEL ADJUSTMENT (FINE) (FOR AU-65 NTSC & PAL)

(W4 DEC & CTCM)

TEST POINT	MODE	TAPE USED	M.EQ.	INPUT SIGNAL	ADJUSTMENT
VIDEO 2 OUT	E-E (EJECT)	------	WAVEFORM MONITOR	Y/C IN COLOR BAR (NTSC 75%) (PAL 100%)	VR206 (4P Y LEV)

Step 1. MACHINE CONDITION	The following adjustments should be completed before this adjustment is done. Please confirm them. 1) COMPOSITE Y INPUT LEVEL ADJUSTMENT (3-17) 2) Y NON LINEAR DE-EMPHASIS LEVEL (7-14-N or P) 3) Y NON LINEAR PRE-EMPHASIS LEVEL (7-21-N or P) 4) Y FM DEVIATION (7-26-N or P) 5) Y A/D PEDESTAL VOLTAGE (9-2) 6) Y A/D INPUT GAIN (9-4) 7) VIDEO 2 OUT LEVEL (9-13)
Step 2. 1. VIDEO VR : Push In to PRESET POSITION 2. Adjust VR206 so that the Video Level (V) becomes 0.714 ± 0.007Vp-p. NTSC 0.714V (± 2%) PAL 0.7V (± 2%)	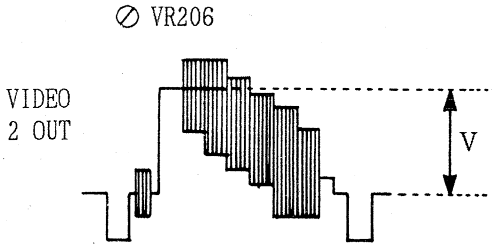 NTSC V = 0.714V (± 2%) PAL V = 0.7V (± 2%)

13-19. COMPONENT INPUT VECTOR ADJUSTMENT (FINE)
(FOR AU-65 NTSC & PAL)

(W4 DEC & CTCM)

TEST POINT	MODE	TAPE USED	M.EQ.	INPUT SIGNAL	ADJUSTMENT
VIDEO 2 OUT	E-E (EJECT)	------	VECTOR SCOPE	COMPONENT COLOR BAR (NTSC 75%) (PAL 100%)	VR502 (Pb LEV 2)

Step 1. MACHINE CONDITION	The following adjustments should be completed before this adjustment is done. 1) C DEVIATION CONFIRMATION (7-34-N or P) 2) VIDEO OUTPUT VECTOR (9-17)
Step 2. [NTSC] 1. Adjust VR502 so that the each Vector is within its inner box on the Vector scope. (2%)	VIDEO 2 OUT ⊘ VR502 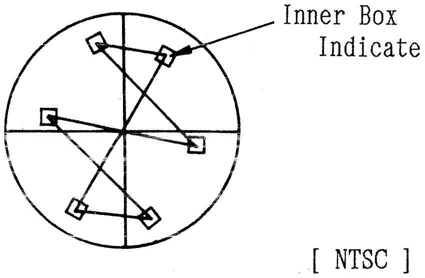 [NTSC] 75%
Step 2. [PAL] 1. Connect the vector scope to signal generator, and set the vector scope the burst level 100%. 2. Reconnect the vector scope to VIDEO 2 OUT on the Rear Panel. 1. Adjust VR502 so that the each Vector is within its inner box on the Vector scope. (2%)	VIDEO 2 OUT ⊘ VR502 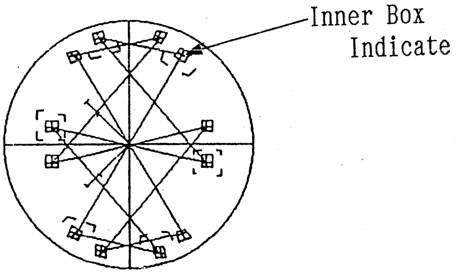 [PAL] 100%

13-20. LINE INPUT VECTOR ADJUSTMENT (FINE)
(FOR AU-65 NTSC & PAL)

(W4 DEC & CTCM)

TEST POINT	MODE	TAPE USED	M.EQ.	INPUT SIGNAL	ADJUSTMENT
[NTSC & PAL] VIDEO 2 OUT [PAL] COMPONENT Pb, Pr OUT	E-E (EJECT)	------	[NTSC & PAL] VECTOR SCOPE [PAL] WAVEFORM MONITOR	LINE IN COLOR BAR (NTSC 75%) (PAL 100%)	VR213 (Pb LEV 1) VR215 (Pr LEV 1) VR218 (AXIS PHASE) VC401

Step 1.

MACHINE CONDITION

1. The following adjustments should be completed before this adjustment is done.
   1) C DEVIATION CONFIRMATION (7-34-N or P)
   2) VIDEO OUTPUT VECTOR (9-17)
   3) COMPONENT INPUT VECTOR (13-19)
2. VIDEO VR : Push In to PRESET POSITION

Step 2. [NTSC]

1. Adjust VR213, VR215, VR218 and VC401 so that the each Vector is within its inner box on the Vector Scope. (2%)

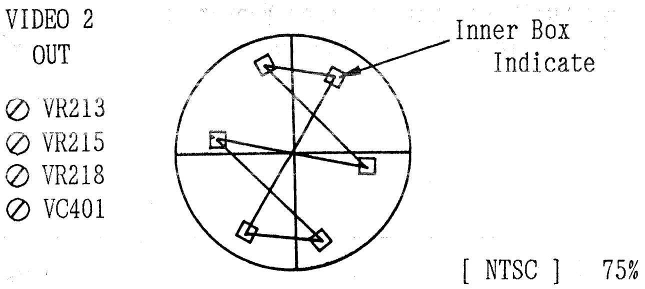

Step 2. [PAL]

1. Connect the waveform monitor to COMPONENT Pb and Pr OUT.
2. Adjust VR218 and VC401 so that the clouble portion of waveoform is minimum.

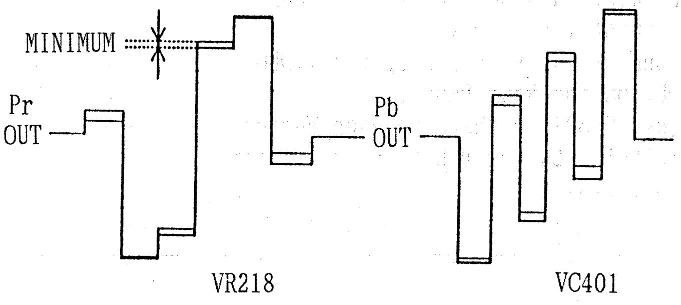

Step 3. [PAL]

1. Connect the vector scope to signal generator, and set the vector scope the burst level 100%.
2. Reconnect the vector scope to VIDEO 2 OUT on the Rear Panel.
3. Adjust VR213 and VR215 so that the each Vector is within its inner box on the Vector Scope. (2%)

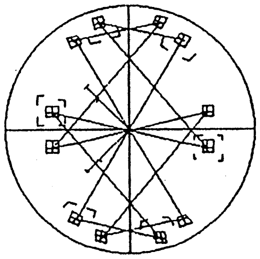

[PAL] 100%

13-21. Y/C INPUT VECTOR ADJUSTMENT (FINE) (FOR AU-65 NTSC & PAL)

(W4 DEC & CTCM)

TEST POINT	MODE	TAPE USED	M.EQ.	INPUT SIGNAL	ADJUSTMENT
VIDEO 2 OUT	E-E (EJECT)	------	VECTOR SCOPE	Y/C IN COLOR BAR (NTSC 75%) (PAL 100%)	VR201 (4P C LEV)

Step 1. MACHINE CONDITION	1. The following adjustments should be completed before this adjustment is done. 1) C DEVIATION CONFIRMATION (7-34-N or P) 2) VIDEO OUTPUT VECTOR (9-17) 3) COMPONENT INPUT VECTOR (13-19) 4) LINE INPUT VECTOR (13-20) 2. INPUT SELECT : Y/C side (on Pull Out Drawer) 3. YC/COMPONENT SELECT : YC side (on Front Sub Panel)
Step 2. [NTSC] 1. Adjust VR201 so that the each vector is within its inner box on the vector scope. (2%)	VIDEO 2 OUT ⊘ VR201 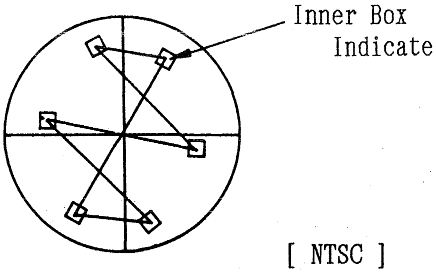 [NTSC]
Step 2. [PAL] 1. Connect the vector scope to signal generator, and set the vector scope the burst level 100%. 2. Reconnect the vector scope to VIDEO 2 OUT on the Rear Panel. 3. Adjust VR201 so that the each vector is within its inner box on the vector scope. (2%)	VIDEO 2 OUT ⊘ VR201 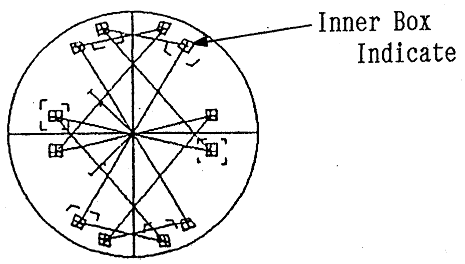 [PAL]

13-22-N(A). SCH ADJUSTMENT (BY USING AU-665)
(FOR AU-65 NTSC)

(W4 DEC & CTCM)

TEST POINT	MODE	TAPE USED	M.EQ.	INPUT SIGNAL	ADJUSTMENT
TP404	E-E (EJECT)	------	SCH METER (TEK 1750)	LINE IN COMPOSITE SIGNAL FROM AU-665	VR401 (SCH -) VR402 (SCH +)

Step 1.

CONNECTION METHOD

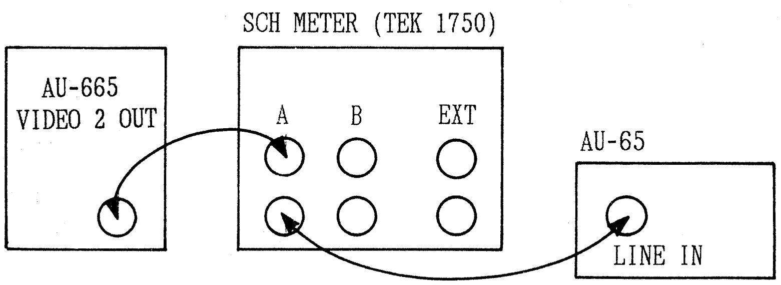
SCH METER (TEK 1750)
AU-665
VIDEO 2 OUT
A
B
EXT
AU-65
LINE IN

Step 2.

1. STD/NSTD SELECT : STD
   (on Set Up Menu & Front Sub Panel)
2. SCH METER : SCH Mode
   (TEK 1750)
3. Adjust the SCH Phase VR of AU-665
   so that the SCH phase becomes -70°
   at SCH Meter.
4. SCOPE : TP404
5. Confirm the DC voltage can be changed
   (H ←→ L) by turning VR401.
6. VR401 : Fully Counterclockwise
7. Adjust VR401 so that the DC Level just
   becomes 1st Max. POINT at TP404.

Note:
There are 2 adjustment points. Adjust VR401 so that the DC Level comes up to the first high level point from full counterclockwise position.

8. Adjust VR401 so that the DC Level just
   becomes High level at TP404.

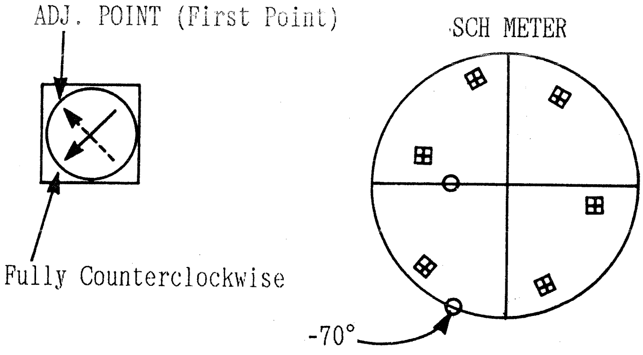
ADJ. POINT (First Point)
Fully Counterclockwise
SCH METER
-70°

Step 3.

1. Adjust the SCH Phase VR of AU-665 so that the SCH phase becomes +70° at SCH Meter.
2. VR402 : Fully Counterclockwise
3. Adjust VR402 so that the DC Level just becomes High Level at TP404.

Note:
There are 2 adjustment points. Adjust VR402 so the DC Level comes up to the first high level point from full counterclockwise position.

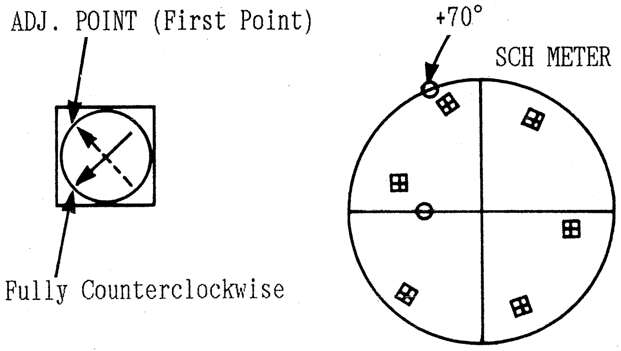
ADJ. POINT (First Point)
Fully Counterclockwise
+70°
SCH METER

13-22-N(B). SCH ADJUSTMENT (BY USING AU-65) (FOR AU-65 NTSC)

(W4 DEC & CTCM)

TEST POINT	MODE	TAPE USED	M.EQ.	INPUT SIGNAL	ADJUSTMENT
IC402 (4) IC403 (9) IC404 (6)	E-E (EJECT)	-------	SCH METER OSCILLOSCOPE	LINE IN (SCH 0°)	VR401 (SCH -) VR402 (SCH +)

Step 1.

CONNECTION METHOD

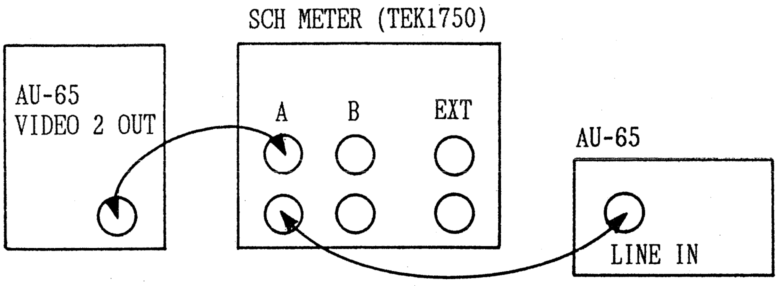
SCH METER (TEK1750)
AU-65
VIDEO 2 OUT
A
B
EXT
AU-65
LINE IN

Step 2.

1. STD/NSTD SELECT : STD
   (on Set Up Menu & Front Sub Panel)
2. SCH METER
   (TEK 1750)
3. Adjust the SCH Phase VR of AU-65 so that the SCH phase becomes 0° at SCH Meter.
4. Connect the scope 9 pin of IC403, 3 pin and 6 pin of IC404.
5. Adjust VR401 and VR402 so that pulse timing is as shown in figure.

Note:
The pulse of 9 pin of IC403 is burst SC. Therefore pulse phase is inverted each feild.

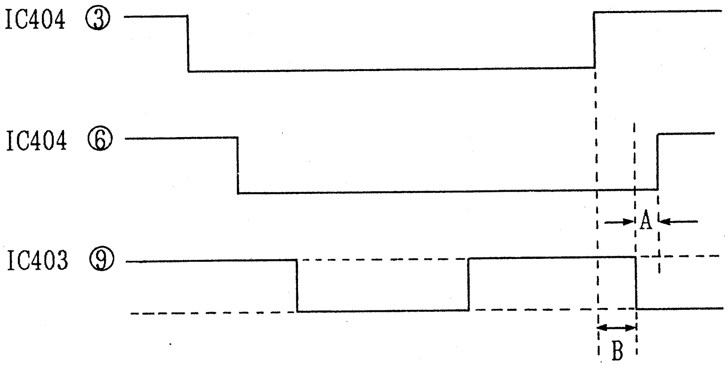
IC404 ③
IC404 ⑥
IC403 ⑨
A
B

A = 12 ± 2 nsec.
B = 24 ± 2 nsec.
(Trigger IC403 - 9)

13-22-P. SCH ADJUSTMENT (FOR AU-65 PAL)

(W4 DEC & CTCM)

TEST POINT	MODE	TAPE USED	M.EQ.	INPUT SIGNAL	ADJUSTMENT
TP401 TP402	E-E (EJECT)	-------	SCH METER (TEK 1751) OSCILLOSCOPE	LINE IN COMPOSITE SIGNAL (SCH 0°)	VR401 (SCH -)

Step 1.

CONNECTION METHOD

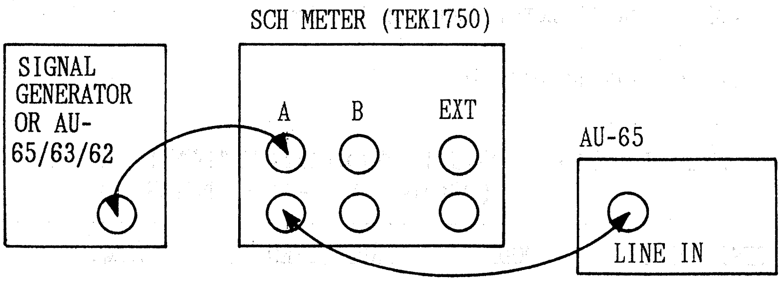
SCH METER (TEK1750)
SIGNAL GENERATOR OR AU-65/63/62
A
B
EXT
AU-65
LINE IN

Step 2.

1. STD/NSTD SELECT : STD
   (on Set Up Menu & Front Sub Panel)
2. SCH METER (METER 1751) : SCH Mode
3. Adjust SIGNAL GEN or another MII VTR so that the SCH phase becomes ± 0°.
4. Connect the oscilloscope to TP401 and TP402.
5. Adjust VR401 so that the (A) equal (B) as shown in figure.

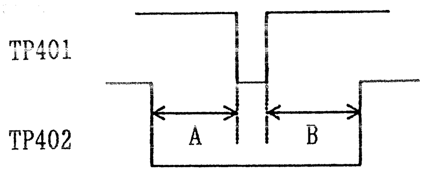
TP401
TP402
A
B

A = B ± 0.5 msec

13-23. VISC PHASE ADJUSTMENT
(FOR AU-65 NTSC & PAL)

(W4 DEC & CTCM)

TEST POINT	MODE	TAPE USED	M.EQ.	INPUT SIGNAL	ADJUSTMENT
VIDEO 2 OUT	E-E (EJECT)	------	SCH METER (VECTOR Mode)	LINE IN COLOR BAR (with VITS Signal that have Pb axis SC)	VR11 (VSC ⊘)

Step 1.

MACHINE CONDITION

1. TBC & SYNC GEN (W1) Adjustment should be completed.
2. ENCODER (W2) Adjustment should be completed.
3. SW7 (on W1) : OFF
4. STD/NSTD SELECT : STD
   (Set-up Menu No. 1011 → 00 FRONT SWITCH)
   (Input Signal is standard from signal generator)

Step 2. [NTSC]

1. VECTOR SCOPE : VIDEO 2 OUT
2. Confirm that the VISC signal phase is same as VIR signal phase as shown in figure. (± 2°)
3. If it is not, readjust VR11 so that the each phase becomes same phase.
4. SW7 (on W1) : ON

VIDEO 2 OUT

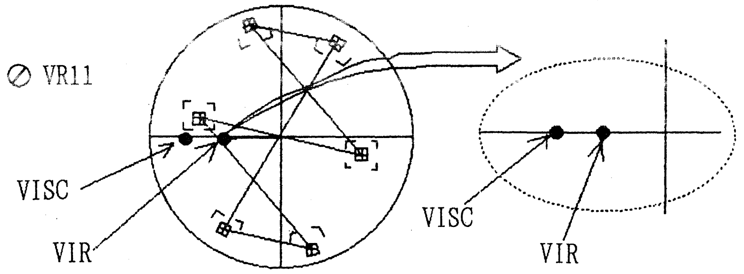

VISC PHASE & VIR PHASE should be the same

Step 2. [PAL]

1. VECTOR SCOPE : VIDEO 2 OUT
2. Confirm that the VISC signal phase is same as VITS (Pb axis Sub Carrier) signal phase as shwon in figure. (± 2°)
3. If it is not, readjust VR11 so that the each phase becomes same phase.
4. SW7 (on W1) : ON

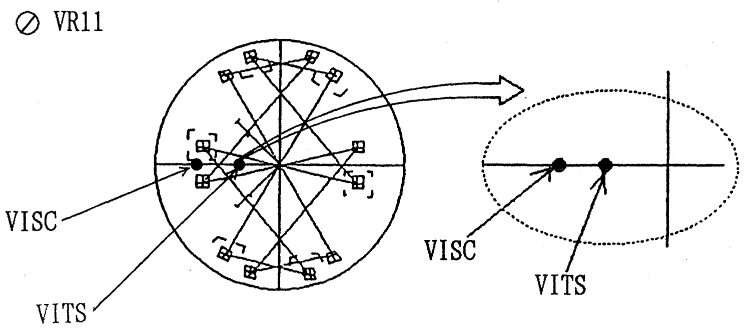

VISC PHASE & VITS PHASE should be the same

13-24. 13.5 MHz PLL ADJUSTMENT (1)
(FOR AU-65 NTSC & PAL)

(W4 DEC & CTCM)

TEST POINT	MODE	TAPE USED	M.EQ.	INPUT SIGNAL	ADJUSTMENT
VIDEO 2 OUT	E-E (EJECT)	------	VECTOR SCOPE	LINE IN COLOR BAR (with VITS Signal that have Pb axis SC)	VR701 (SYNC φ)

Step 1. MACHINE CONDITION	1. TBC & SYNC GEN (W1) Adjustment should be completed before this adjustment is done. 2. ENCODER (W2) Adjustment should be completed. before this adjustment is done. 3. STD/NSTD SELECT : NSTD (Set-up Menu No. 1011 → 01 NON-STD) 4. SW7 (on W1) : OFF
Step 2. [NTSC] 1. VECTOR SCOPE : VIDEO 2 OUT 2. Confirm that the VIR Phase is NTSC : VIR phase = phase 3. If it is not, adjust VR701 so that the Burst Phase is the same as VIR Phase (Phase Difference = 0 ± 2°). 4. SW7 (on W1) : ON	VIDEO 2 OUT ⊘ VR701 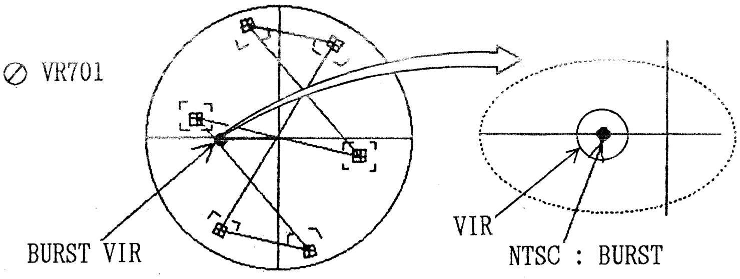 [NTSC]
Step 2. [PAL] 1. VECTOR SCOPE : VIDEO 2 OUT 2. Set the vector scope burst, level 100% and burst phase on the burst line of the vector scope. 3. Confirm that the VITS (Pb axis Sub Carrier) Phase is PAL : VITS Phase = U axis 4. If it is not, adjust VR701 so that the VITS Phase is on U axis. (Phase Difference = 0 ± 2°) 5. SW7 (on W1) : ON	VIDEO 2 OUT ⊘ VR701 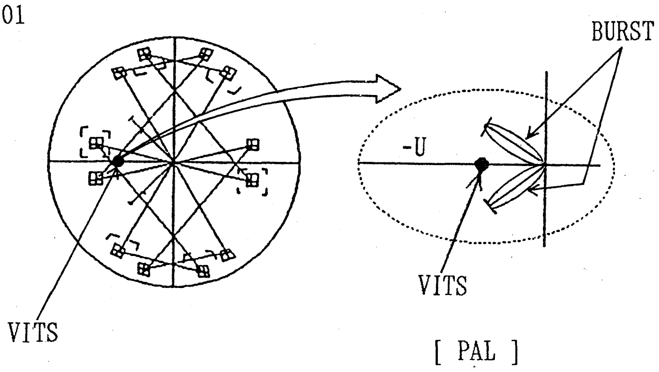 [PAL]

13-25. 13.5 MHz PLL ADJUSTMENT (2)
(FOR AU-65 NTSC & PAL)

(W4 DEC & CTCM)

TEST POINT	MODE	TAPE USED	M.EQ.	INPUT SIGNAL	ADJUSTMENT
VIDEO 2 OUT	E-E (EJECT)	------	VECTOR SCOPE	LINE IN COLOR BAR (with VITS Signal that have Pb axis SC)	VR703 (PLL POS 2)

Step 1.

MACHINE CONDITION

1. TBC & SYNC GEN (W1) Adjustment should be completed before this adjustment is done.
2. ENCODER (W2) Adjustment should be completed before this adjustment is done.
3. STD/NSTD SELECT : STD
   (Set-up Menu No. 1101 → 00 FRONT SWITCH)
   (Input signal is standard from signal generator)
4. SW7 (on W1) : OFF

Step 2. [NTSC]

1. VECTOR SCOPE : VIDEO 2 OUT
2. Confirm that the VIR Phase is
   NTSC : VIR phase = Burst phase
   PAL : VIR phase = -U axis
3. If it is not, adjust VR703 so that the Burst Phase is the same as VIR Phase (Phase Difference = 0 ± 2°).
4. SW7 (on W1) : ON

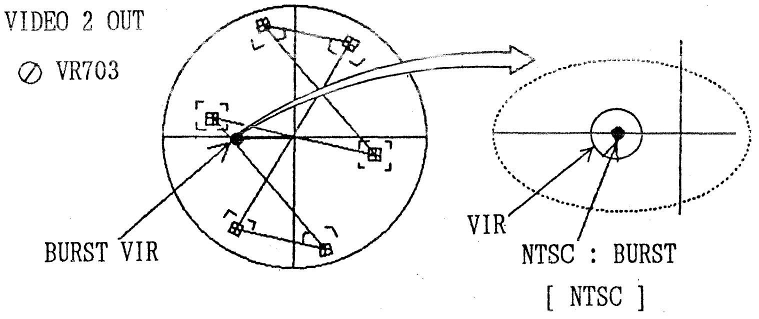

Step 2. [PAL]

1. VECTOR SCOPE : VIDEO 2 OUT
2. Set the vector scope, burst level 100% and burst phase on the burst line of the vector scope.
3. Confirm that the VITS (Pb axis sub Carrier) Phase is
   PAL : VITS Phase = - U axis
4. If it is not, adjust VR703 so that the VITS is on U axis.
   (Phase Difference = 0 ± 2°)
5. SW7 (on W1) : ON

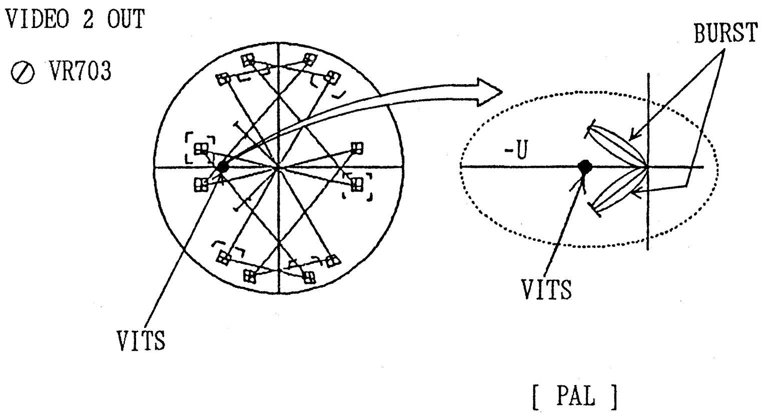

13-26. 13.5 MHz PLL ADJUSTMENT (3) (FOR AU-65 NTSC & PAL)

(W4 DEC & CTCM)

TEST POINT	MODE	TAPE USED	M.EQ.	INPUT SIGNAL	ADJUSTMENT
TP703	E-E (EJECT)	------	OSCILLOSCOPE	LINE IN COLOR BAR	VR702 (PLL POS 1)

Step 1. MACHINE CONDITION	1. TBC & SYNC GEN (W1) Adjustment should be completed before this adjustment is done. 2. ENCODER (W2) Adjustment should be completed before this adjustment is done. 3. STD/NSTD SELECT : STD (Set-up Menu No. 1011 → 00 FRONT SWITCH) (Input Signal is standard from Signal generator)
Step 2. 1. SCOPE : TP703 2. Trigger the scope with the composite sync out of the signal generator. 3. Memorize the sync position in STD mode. 4. STD/NSTD SELECT : NSTD (Set-up Menu No. 1011 → 01 NON-STD) 5. Confirm that the sync position of NSTD mode is same as STD mode. 6. If it is not, adjust VR702 so that the NSTD sync position is same as STD sync position. 7. After adjustment SW800 (W2) set "ON" mode.	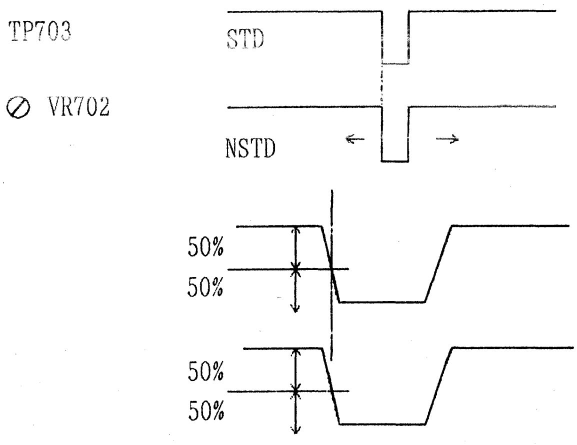 TP703 ⊘ VR702 STD NSTD ← → 50% 50% 50% 50%

14. AUDIO (W6) BOARD (2/2)

FM AUDIO SECTION (W6) FLOWCHART FOR AU-65

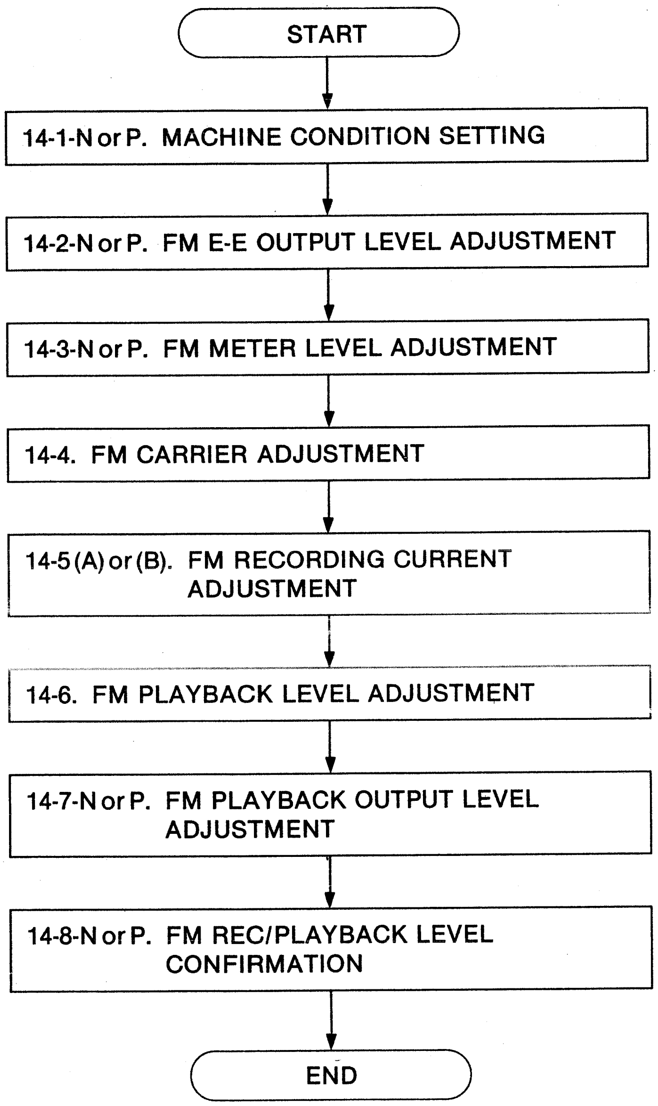
START
14-1-N or P. MACHINE CONDITION SETTING
14-2-N or P. FM E-E OUTPUT LEVEL ADJUSTMENT
14-3-N or P. FM METER LEVEL ADJUSTMENT
14-4. FM CARRIER ADJUSTMENT
14-5 (A) or (B). FM RECORDING CURRENT ADJUSTMENT
14-6. FM PLAYBACK LEVEL ADJUSTMENT
14-7-N or P. FM PLAYBACK OUTPUT LEVEL ADJUSTMENT
14-8-N or P. FM REC/PLAYBACK LEVEL CONFIRMATION
END

FM AUDIO SECTION (W6) FLOWCHART FOR AU-63 AND AU-62

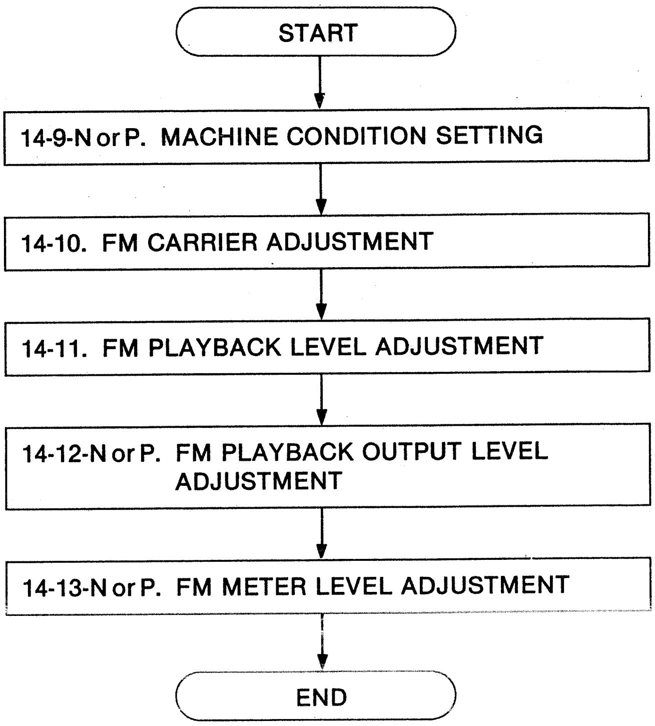
START
14-9-N or P. MACHINE CONDITION SETTING
14-10. FM CARRIER ADJUSTMENT
14-11. FM PLAYBACK LEVEL ADJUSTMENT
14-12-N or P. FM PLAYBACK OUTPUT LEVEL ADJUSTMENT
14-13-N or P. FM METER LEVEL ADJUSTMENT
END

14. AUDIO (W6) BOARD (2/2)
— FM AUDIO SECTION —

14-1-N. MACHINE CONDITION SETTING (FOR AU-65 NTSC FM AUDIO)

Set the switches on the Front Panel as shown except certain steps for NTSC VTR (See Machine Condition).

PB VR -- PRESET side
METER SELECT -- FM
MODE -- E-E
INPUT LEVEL SELECT (on the Audio I/O Board) --------------- +4dBm
OUTPUT LEVEL SELECT (on the Audio I/O Board) --------------- +4dBm

14-1-P. MACHINE CONDITION SETTING (FOR AU-65 PAL FM AUDIO)

Set the switches on the Front Panel as shown except certain steps for PAL VTR (See Machine Condition).

PB VR -- PRESET side
METER SELECT -- FM
MODE -- E-E
INPUT LEVEL SELECT (on the Audio I/O Board) --------------- +0dBu
OUTPUT LEVEL SELECT (on the Audio I/O Board) --------------- +0dBu

14-2-N. FM E-E OUTPUT LEVEL ADJUSTMENT (FOR AU-65 NTSC)

(W6 AUDIO)

TEST POINT	MODE	TAPE USED	M.EQ.	INPUT SIGNAL	ADJUSTMENT
CH3 LINE OUT CH4 LINE OUT	EJECT	-------	VTVM	1KHz Sinewave Signal +4dBm	VR701 (CH3 EE) VR801 (CH4 EE)

Step 1. MACHINE CONDITION	Refer to Set Up Conditions at the beginning of this SECTION (AUDIO - W6 Machine Condition 14-1-N).
Step 2. VTVM : CH3 LINE OUT CH4 LINE OUT	SPECIFICATION : +4dBm ± 0.2dB

14-2-P. FM E-E OUTPUT LEVEL ADJUSTMENT (FOR AU-65 PAL)

(W6 AUDIO)

TEST POINT	MODE	TAPE USED	M.EQ.	INPUT SIGNAL	ADJUSTMENT
CH3 LINE OUT CH4 LINE OUT	EJECT	-------	VTVM	1KHz Sinewave Signal +0dBu	VR701 (CH3 EE) VR801 (CH4 EE)

Step 1. MACHINE CONDITION	Refer to Set Up Conditions at the beginning of this SECTION (AUDIO - W6 Machine Condition 14-1-P).
Step 2. VTVM : CH3 LINE OUT CH4 LINE OUT	SPECIFICATION : +0dBu ± 0.2dB

14-3-N. FM METER LEVEL ADJUSTMENT (FOR AU-65 NTSC)

(FRONT I/F BOARD)

TEST POINT	MODE	TAPE USED	M.EQ.	INPUT SIGNAL	ADJUSTMENT
CH3 METER CH4 METER	EJECT	-------	-------	1KHz Sinewave Signal +4dBm	VR103 (CH3 METER) on Front Interface Board VR104 (CH4 METER) on Front Interface Board

Step 1. MACHINE CONDITION	Refer to Set Up Conditions at the beginning of this SECTION (AUDIO - W6 Machine Condition 14-1-N).
Step 2. 1. Adjust VR103 (CH1) and VR104 (CH3) on the Front Interface Board so that the meter indicates "0" VU as shown.	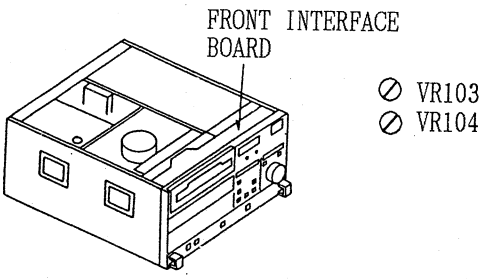 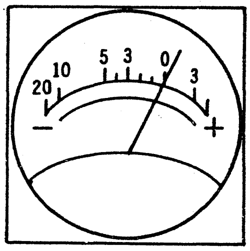

14-3-P. FM METER LEVEL ADJUSTMENT (FOR AU-65 PAL)

(FRONT I/F BOARD)

TEST POINT	MODE	TAPE USED	M.EQ.	INPUT SIGNAL	ADJUSTMENT
CH3 METER CH4 METER	EJECT	-------	-------	1KHz Sinewave Signal 0dBu	VR103 (CH3 METER) on Front Interface Board VR104 (CH4 METER) on Front Interface Board

Step 1. MACHINE CONDITION	Refer to Set Up Conditions at the beginning of this SECTION (AUDIO - W6 Machine Condition 14-1-P).
Step 2. 1. Adjust VR103 (CH1) and VR104 (CH3) on the Front Interface Board so that the meter indicates "-4" VU as shown.	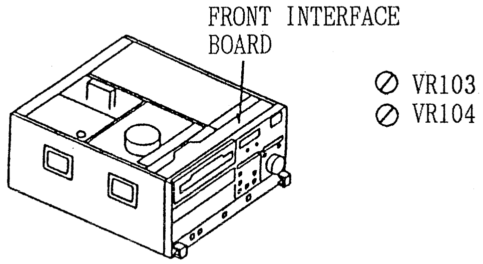 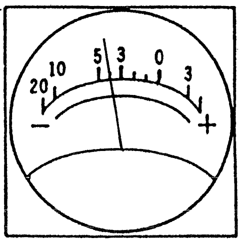

14-4. FM CARRIER ADJUSTMENT
(FOR AU-65 NTSC & PAL)

(W6 AUDIO)

TEST POINT	MODE	TAPE USED	M.EQ.	INPUT SIGNAL	ADJUSTMENT
TP704 (CH3) TP804 (CH4)	EJECT	-------	FREQUENCY COUNTER	----------	VR704 (CH3 FO) VR804 (CH4 FO)

Step 1. MACHINE CONDITION	Refer to Set Up Conditions at the beginning of this SECTION (AUDIO - W6 Machine Condition 14-1-N or 14-1-P).
Step 2. Frequency Counter : TP704 (CH3) TP804 (CH4)	SPECIFICATION : TP704 = 400KHz ± 1KHz TP804 = 700KHz ± 1KHz

14-5(A). FM RECORDING CURRENT ADJUSTMENT
(BY USING SPECTRUM ANALYZER)
(FOR AU-65 NTSC & PAL)

TEST POINT	MODE	TAPE USED	M.EQ.	INPUT SIGNAL	ADJUSTMENT
TP2 on RA & HA P. C. Board	EJECT	-------	SPECTRUM ANALYZER	COMPOSITE 50% FLAT FIELD TO LINE INPUT	VR901 (FM CURR.)

Step 1. MACHINE CONDITION	1. Refer to Set Up Conditions at the beginning of this SECTION (AUDIO - W6 Machine Condition 14-1-N or 14-1-P). 2. The Video Head must be degaussed with a magnetic eraser. 3. The C REC CURRENT ADJ. (12-13-N or 12-13-P and 12-14-N or 12-14-P) should be completed.
Step 2. 1. ANALYZER : TP2 (on RA & HA P.C.B.) 2. Adjust VR901 so that the FM Carrier Level is -27dB ± 0.5dB against the chroma carrier level as shown.	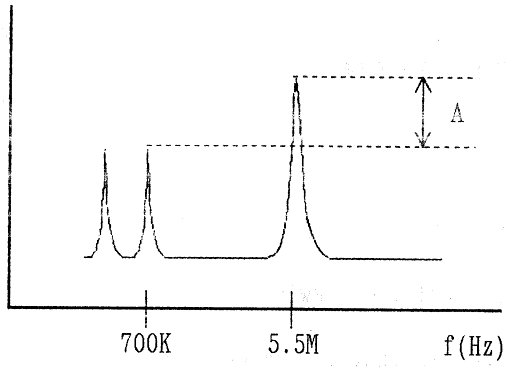 A = -27dB ± 0.5dB

14-5(B). FM RECORDING CURRENT ADJUSTMENT
(BY USING OSCILLOSCOPE)
(FOR AU-65 NTSC & PAL)

TEST POINT	MODE	TAPE USED	M.EQ.	INPUT SIGNAL	ADJUSTMENT
TP2 on RA & HA P. C. Board	EJECT	-------	OSCILLOSCOPE	COMPOSITE 50% FLAT FIELD TO LINE INPUT	VR901 (FM CURR.)

Step 1. MACHINE CONDITION	1. Refer to Set Up Conditions at the beginning of this SECTION (AUDIO - W6 Machine Condition 14-1-N or 14-1-P). 2. The Video Head must be degaussed with a magnetic eraser. 3. The C REC CURRENT ADJ. (12-13-N or 12-13-P and 12-14-N or 12-14-P) should be completed.
Step 2. SCOPE CONDITION	VOLTS/DIV. = 50mV or 20mV TIME /DIV. = 20nsec BAND FILTER = OFF
Step 3. SCOPE : TP2 (on RA & HA P.C.B.) 1. VR901 : Fully Clockwise 2. Adjust VR901 so that the FM Carrier (A) level becomes 35mV ± 5mVp-p as shown.	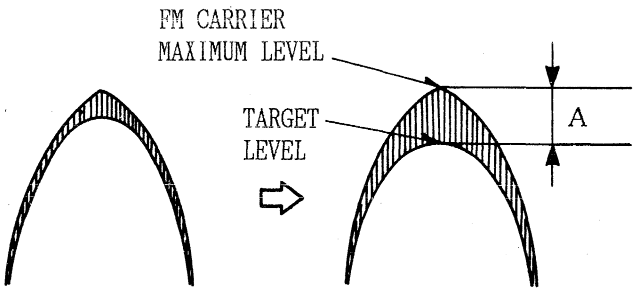 A = 35 ± 5mVp-p

14-6. FM PLAYBACK LEVEL ADJUSTMENT (FOR AU-65 NTSC & PAL)

(W6 AUDIO)

TEST POINT	MODE	TAPE USED	M.EQ.	INPUT SIGNAL	ADJUSTMENT
TP702 TP802	PLAY	ALIGNMENT TAPE 1KHz 0VU PORTION	VTVM	----------	VR703 (CH3 PB) VR803 (CH4 PB)

Step 1. MACHINE CONDITION VTVM CONDITION	Refer to Set Up Conditions at the beginning of this SECTION (AUDIO - W6 Machine Condition 14-1-N or 14-1-P). FILTER : 20KHz L.P.F. (DIN AUDIO)
Step 2. 1. Play back the 1KHz 0VU portion of the Alignment Tape. 2. Adjust VR703 and VR803 so that the TP702 and TP802 becomes -16dB ± 0.2dB.	⊘ VR703 VR803 SPECIFICATION : -16dB ± 0.2dB

14-7-N. FM PLAYBACK OUTPUT LEVEL ADJUSTMENT (FOR AU-65 NTSC)

(FRONT I/F BOARD)

TEST POINT	MODE	TAPE USED	M.EQ.	INPUT SIGNAL	ADJUSTMENT
CH3 LINE OUT CH4 LINE OUT	PLAY	ALIGNMENT TAPE	VTVM	----------	VR12 (CH3 PB LEVEL) (on Front I/F Board) VR13 (CH4 PB LEVEL) (on Front I/F Board)

Step 1. MACHINE CONDITION	1. Refer to Set Up Conditions at the beginning of this SECTION (AUDIO - W6 Machine Condition 14-1-N). 2. FM AUDIO PB LEVEL SW (CH3 & CH4) : PRESET (on Front Interface Board)
Step 2. 1. Play back the 1KHz 0VU portion of the Alignment Tape. 2. Adjust VR12 and VR13 so that the CH3 and CH4 PB LEVEL is +4dBm ± 0.2dB.	⊘ VR 12/13 (on Front I/F Board) SPECIFICATION : +4dBm ± 0.2dB

14-7-P. FM PLAYBACK OUTPUT LEVEL ADJUSTMENT (FOR AU-65 PAL)

(FRONT I/F BOARD)

TEST POINT	MODE	TAPE USED	M.EQ.	INPUT SIGNAL	ADJUSTMENT
CH3 LINE OUT CH4 LINE OUT	PLAY	ALIGNMENT TAPE	VTVM	----------	VR12 (CH3 PB LEVEL) (on Front I/F Board) VR13 (CH4 PB LEVEL) (on Front I/F Board)

Step 1. MACHINE CONDITION	1. Refer to Set Up Conditions at the beginning of this SECTION (AUDIO - W6 Machine Condition 14-1-P). 2. FM AUDIO PB LEVEL SW (CH3 & CH4) : PRESET (on Front Interface Board)
Step 2. 1. Play back the 1KHz 0VU portion of the Alignment Tape. 2. Adjust VR12 and VR13 so that the CH3 and CH4 PB LEVEL is +0dBu ± 0.2dB.	⊘ VR 12/13 (on Front I/F Board) SPECIFICATION : +0dBu ± 0.2dB

14-8-N. FM REC/PLAYBACK LEVEL CONFIRMATION (FOR AU-65 NTSC)

(W6 AUDIO)

TEST POINT	MODE	TAPE USED	M.EQ.	INPUT SIGNAL	ADJUSTMENT
CH3 LINE OUT CH4 LINE OUT	SELF REC/PLAY	BLANK TAPE	VTVM	1KHz Sinewave Signal +4dBm	VR705 (CH3 DEV.) VR805 (CH4 DEV.)

Step 1. MACHINE CONDITION	Refer to Set Up Conditions at the beginning of this SECTION (AUDIO - W6 Machine Condition 14-1-N).
Step 2. 1. Make a recording for a few minutes. 2. Play back the just recorded portion. 3. Confirm that the Line Output Level is +4dBm ± 0.2dB. 4. If it is not, adjust VR705 and VR805 and repeat from Item 1 to Item 3 until the output level becomes +4dBm ± 0.2dB.	SPECIFICATION : +4dBm ± 0.2dB

14-8-P. FM REC/PLAYBACK LEVEL CONFIRMATION
(FOR AU-65 PAL)

(W6 AUDIO)

TEST POINT	MODE	TAPE USED	M.EQ.	INPUT SIGNAL	ADJUSTMENT
CH3 LINE OUT CH4 LINE OUT	SELF REC/PLAY	BLANK TAPE	VTVM	1KHz Sinewave Signal +0dBu	VR705 (CH3 DEV.) VR805 (CH4 DEV.)

Step 1. MACHINE CONDITION	Refer to Set Up Conditions at the beginning of this SECTION (AUDIO - W6 Machine Condition 14-1-P).
Step 2. 1. Make a recording for a few minutes. 2. Play back the just recorded portion. 3. Confirm that the Line Output Level is +0dBu ± 0.2dB. 4. If it is not, adjust VR705 and VR805 and repeat from Item 1 to Item 3 until the output level becomes +0dBu ± 0.2dB.	SPECIFICATION : +0dBu ± 0.2dB

14-9-N. MACHINE CONDITION SETTING (FOR AU-63/62 NTSC FM AUDIO)

Set the switches on the Front Panel as flollows except special condition for NTSC VTR.

PB VR -- PRESET side
METER SELECT -- FM
OUTPUT LEVEL SELECT (on the Audio I/O Board) --------------- +4dBm

14-9-P. MACHINE CONDITION SETTING (FOR AU-63/62 PAL FM AUDIO)

Set the switches on the Front Panel as flollows except special condition for PAL VTR.

PB VR -- PRESET side
METER SELECT -- FM
OUTPUT LEVEL SELECT (on the Audio I/O Board) --------------- +0dBu

14-10. FM CARRIER ADJUSTMENT (FOR AU-62/63) (FOR AU-62/63 PAL & NTSC)

(W6 AUDIO)

TEST POINT	MODE	TAPE USED	M.EQ.	INPUT SIGNAL	ADJUSTMENT
TP704 (CH3) TP804 (CH4)	EJECT	-------	FREQUENCY COUNTER	----------	VR704 (CH3 FO) VR804 (CH4 FO)

Step 1. MACHINE CONDITION	1. Refer to Set Up Conditions at 14-9-N or 14-9-P Machine Condition Setting (for AU-62/63). 2. Short a jumper wire between TP902 and TP903.
Step 2. Frequency Counter : TP704 (CH3) TP804 (CH4)	SPECIFICATION : TP704 = 400KHz ± 1KHz TP804 = 700KHz ± 1KHz

14-11. FM PLAYBACK LEVEL ADJUSTMENT (FOR AU-62/63 NTSC & PAL)

(W6 AUDIO)

TEST POINT	MODE	TAPE USED	M.EQ.	INPUT SIGNAL	ADJUSTMENT
CH3 TP702 CH4 TP802	PLAY	ALIGNMENT TAPE 1KHz OVU	VTVM	----------	VR703 (CH3 PB) VR803 (CH4 PB)

Step 1. MACHINE CONDITION	Refer to Set Up Conditions at 14-9-N or 14-9-P Machine Condition Setting (for Au-62/63).
Step 2. 1. Play back the 1KHz OVU portion of the Alignment Tape. 2. Adjust VR703 and VR803 so that the Line output level becomes -16dB ± 0.2dB.	⊘ VR703 VR803 SPECIFICATION : -16dB ± 0.2dB

14-12-N. FM PLAYBACK OUTPUT LEVEL ADJUSTMENT (FOR AU-62/63 NTSC)

(W6 AUDIO)

TEST POINT	MODE	TAPE USED	M.EQ.	INPUT SIGNAL	ADJUSTMENT
CH3 LINE OUT CH4 LINE OUT	PLAY	ALIGNMENT TAPE 1KHz OVU	VTVM	----------	VR12 (CH3 PB LEVEL) (on Front I/F Board) VR13 (CH4 PB LEVEL) (on Front I/F Board)

Step 1. MACHINE CONDITION	1. Refer to Set Up Conditions at 14-9-N Machine Condition Setting (for AU-62/63). 2. FM AUDIO PB LEVEL SW (CH3 & CH4) : PRESET (on Front Interface Board)
Step 2. 2. Play back the 1KHz OVU portion of the Alignment Tape. 3. Adjust VR12 and VR13 so that the CH3 and CH4 PB LEVEL is +4dBm ± 0.2dB.	⊘ VR 12 (on Front I/F Board) ⊘ VR 13 SPECIFICATION : +4dBm ± 0.2dB

14-12-P. FM PLAYBACK OUTPUT LEVEL ADJUSTMENT (FOR AU-62/63 PAL)

(W6 AUDIO)

TEST POINT	MODE	TAPE USED	M.EQ.	INPUT SIGNAL	ADJUSTMENT
CH3 LINE OUT CH4 LINE OUT	PLAY	ALIGNMENT TAPE 1KHz 0VU	VTVM	----------	VR12 (CH3 PB LEVEL) (on Front I/F Board) VR13 (CH4 PB LEVEL) (on Front I/F Board)

Step 1. MACHINE CONDITION	1. Refer to Set Up Conditions at 14-9-P Machine Condition Setting (for AU-62/63). 2. FM AUDIO PB LEVEL SW (CH3 & CH4) : PRESET (on Front Interface Board)
Step 2. 2. Play back the 1KHz 0VU portion of the Alignment Tape. 3. Adjust VR12 and VR13 so that the CH3 and CH4 PB LEVEL is +0dBu ± 0.2dB.	⊘ VR 12 (on Front I/F Board) ⊘ VR 13 SPECIFICATION : +0dBu ± 0.2dB

14-13-N. FM METER LEVEL ADJUSTMENT (FOR AU-62/63 NTSC)

(W6 AUDIO)

TEST POINT	MODE	TAPE USED	M.EQ.	INPUT SIGNAL	ADJUSTMENT
CH3 METER CH4 METER	EJECT	-------	-------	1KHz Sinewave Signal +4dBm	VR103 (CH3 METER) on Front Interface Board VR104 (CH4 METER) on Front Interface Board

Step 1. MACHINE CONDITION	Refer to Set Up Conditions at 14-9-N Machine Condition Setting (for AU-62/63).
Step 2. 1. Adjust VR103 (CH1) and VR104 (CH3) on the Front Interface Board so that the meter indicates "0" VU as shown in figure.	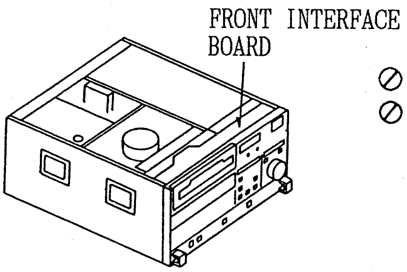 ⊘ VR103 ⊘ VR104 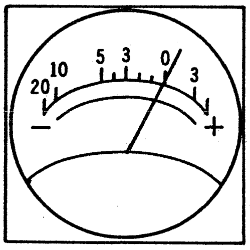

14-13-P. FM METER LEVEL ADJUSTMENT (FOR AU-62/63 PAL)

(W6 AUDIO)

TEST POINT	MODE	TAPE USED	M.EQ.	INPUT SIGNAL	ADJUSTMENT
CH3 METER CH4 METER	EJECT	-------	-------	1KHz Sinewave Signal +0dBu	VR103 (CH3 METER) on Front Interface Board VR104 (CH4 METER) on Front Interface Board

Step 1. MACHINE CONDITION	Refer to Set up Conditions at 14-9-P Machine Condition Setting (for AU-62/63).
Step 2. 1. Adjust VR103 (CH1) and VR104 (CH3) on the Front Interface Board so that the meter indicates "-4" VU as shown in figure.	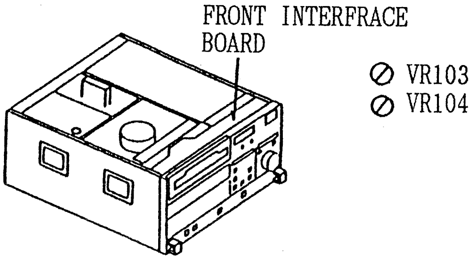 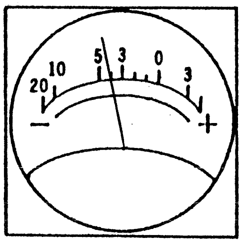

15. FRONT PANEL

15-1. ALARM OSC & LEVEL ADJUSTMENT (NTSC & PAL)

(FRONT PANEL C)

TEST POINT	MODE	TAPE USED	M.EQ.	INPUT SIGNAL	ADJUSTMENT
TP14 TP15	EJECT		OSCILLOSCOPE	----------	VR 1 (ALARM OSC) VR 2 (ALARM LEVEL)

Step 1.
MACHINE CONDITION

SW4 - 8 : ON
VR2 : Fully CCW

Step 2.

Adjust VR1 so that the period A is 250μsec. (±10μsec.) as shown in figure.

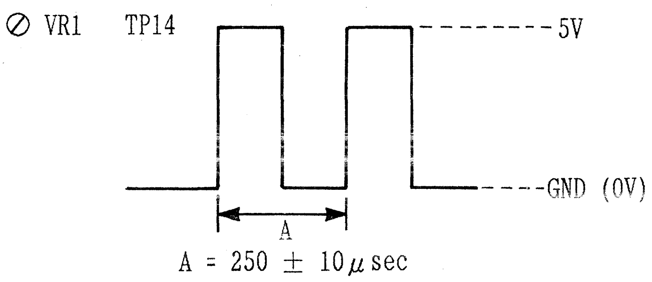
⊘ VR1
TP14
5V
GND (0V)
A
A = 250 ± 10μsec

Step 3.

Confirm that the voltage level is from 4.5V to 4.7V as shown in figure.

Step 4.

Set VR2 fully CW and confirm that the voltage level is from 2.5V to 2.7V as shown in figure.

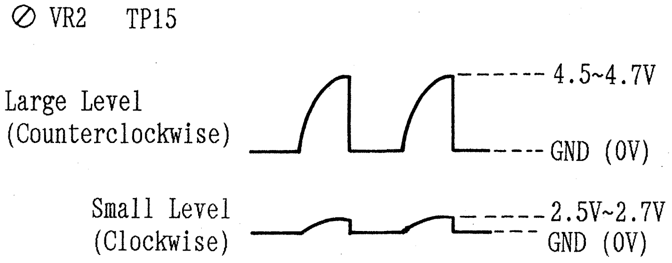
⊘ VR2
TP15
Large Level
(Counterclockwise)
4.5~4.7V
GND (0V)
Small Level
(Clockwise)
2.5V~2.7V
GND (0V)

Step 5.

Reset SW4-8 to OFF and reset VR2 fully CCW to set the maximum audio level.

16. AU-F65 (OPTION TCG/TCR)

16-1. TRIMMER ADJUSTMENT (NTSC & PAL)

(AU-F65 TCG/TCR)

TEST POINT	MODE	TAPE USED	M.EQ.	INPUT SIGNAL	ADJUSTMENT
TP 6	EJECT	-------	FREQUENCY COUNTER	----------	C19
1. Confirm that the frequency at TP6 is 512.000 ± 0.002Hz. 2. If it is not specification, adjust C19 as mentioned above.			TP6 : 512.000 ± 0.002Hz		

PARTS LIST

- Electrical Parts List
- Exploded View
- Mechanical Parts List

This section provides the exploded views, mechanical parts lists and electrical parts lists.

Panasonic

Note:

1. *Be sure to make your orders of replacement parts according to this list.
2. Unless ohterwise specified, all resistors are in OHMS, K = 1,000 OHMS, all capacitors are in MICROFARADS (uF), P = uuF.
3. The P.C.Board units marked with "■" show below the main assembled parts.
4. The parts marked with E on the exploded view show the electric parts.
5. IMPORTANT SAFETY NOTICE
   Components identified with the mark <!> have the special characteristics for safety. When replacing any of these components, use only the same type.

<< Abbreviations for parts >>

< NAME >	< DESCRIPTIONS >
C.CAPACITOR	: CERAMIC CAPACITOR
C.CAPACITOR CH	: CERAMIC CHIP CAPACITOR
E.CAPACITOR	: ELECTROLYTIC CAPACITOR
G.CAPACITOR	: GLASS CAPACITOR
M.CAPACITOR	: MICA CAPACITOR
P.CAPACITOR	: PLASTIC FILM CAPACITOR
S.CAPACITOR	: SEMI-CONDUCTOR CAPACITOR
T.CAPACITOR	: TANTALUM CAPACITOR
TRIMMER	: TRIMMER
C.RESISTOR	: CARBON RESISTOR
F.RESISTOR	: FUSE RESISTOR
M.RESISTOR	: METAL OXSIDE RESISTOR
M.RESISTOR CH	: METAL OXSIDE CHIP RESISTOR
S.RESISTOR	: SOLID RESISTOR
V.RESISTOR	: VARIABLE RESISTOR
W.RESISTOR	: WIRE WOUND RESISTOR
COMBI.TR-R	: TRANSISTOR-RESISTOR COMBINATION PARTS
COMBI.R-R	: RESISTOR-RESISTOR COMBINATION PARTS
COMBI.C-R	: CAPACITOR-RESISTOR COMBINATION PARTS
COMBI.C-R-R	: CAPACITOR-RESISTOR-COIL COMBINATION P
P.C.BOARD	: PRINTED CIRCUIT BOARD
W/COMPONENT	: WITH COMPONENT

CONTENTS

P.C.BOARDS LIST 6-1-1

ELECTRICAL REPLACEMENT PARTS LIST

W0 MOTHER 1 (AU-65-P,E,B) 6-1-7
W0 MOTHER 1 (AU-62-P,E,B) 6-1-7
W0 MOTHER 1 (AU-63-P,E,B) 6-1-8
W1 TBC & SYNC GEN (AU-65/63/62-P) 6-1-9
W1 TBC & SYNC GEN (AU-65/63/62-E,B) 6-1-13
W2 ENCODER (AU-65/63/62-P) 6-1-17
W2 ENCODER (AU-65/63/62-E,B) 6-1-24
W3 MOD & DEMOD (AU-65-P) 6-1-32
W3 MOD & DEMOD (AU-62-P) 6-1-39
W3 MOD & DEMOD (AU-63-P) 6-1-43
W3 MOD & DEMOD (AU-65-E,B) 6-1-49
W3 MOD & DEMOD (AU-63-E,B) 6-1-58
W3 MOD & DEMOD (AU-62-E,B) 6-1-65
W4 DEC & CTCM (AU-65-P) 6-1-72
W4 DEC & CTCM (AU-65-E,B) 6-1-80
W5 SERVO (AU-65-P) 6-1-86
W5 SERVO (AU-62-P) 6-1-91
W5 SERVO (AU-63-P) 6-1-96
W5 SERVO (AU-65/62-E,B) 6-1-103
W5 SERVO (AU-63-E,B) 6-1-109
W6 AUDIO (AU-65-P) 6-1-116
W6 AUDIO (AU-63/62-P) 6-1-123
W6 AUDIO (AU-65-E,B) 6-1-127
W6 AUDIO (AU-63/62-E,B) 6-1-134
B0 MOTHER 2 (AU-65/62-P,E,B) 6-1-138
B0 MOTHER 2 (AU-63-P,E,B) 6-1-138
B1 SYSTEM CONTROL (AU-65-P) 6-1-139
B1 SYSTEM CONTROL (AU-62-P) 6-1-142
B1 SYSTEM CONTROL (AU-63-P) 6-1-145
B1 SYSTEM CONTROL (AU-65-E,B) 6-1-148
B1 SYSTEM CONTROL (AU-63-E,B) 6-1-151
B1 SYSTEM CONTROL (AU-62-E,B) 6-1-154
AT POWER (AU-63-P,E,B) 6-1-157
AUDIO IN/OUT (AU-65-P,E,B) 6-1-157
AUDIO IN/OUT (AU-63/62-P,E,B) 6-1-160
AUDIO VR (AU-65-P,E,B) 6-1-162
AUDIO VR (AU-62-P,E,B) 6-1-162
AUDIO VR (AU-63-P,E,B) 6-1-162
AUTO OFF LED 6-1-163
CASSETTE CARRIAGE LAMP 6-1-163
CASSETTE DETECT 6-1-163
EJECT INTERFACE 6-1-163
EJECT SW 6-1-163
FRONT INTERFACE (AU-65-P) 6-1-163
FRONT INTERFACE (AU-62-P) 6-1-165
FRONT INTERFACE (AU-63-P) 6-1-166
FRONT INTERFACE (AU-65-E,B) 6-1-167
FRONT INTERFACE (AU-63-E,B) 6-1-168
FRONT INTERFACE (AU-62-E,B) 6-1-169
FRONT LOADING 6-1-170
FRONT MODE SELECT CIRCUIT (AU-65-P,E,B) 6-1-170
FRONT MODE SELECT CIRCUIT (AU-62-P,E,B) 6-1-171
FRONT MODE SELECT CIRCUIT (AU-63-P,E,B) 6-1-171
FRONT PANEL A (AU-65-P) 6-1-171
FRONT PANEL A (AU-65-E,B) 6-1-172
FRONT PANEL A (AU-63/62-P,E,B) 6-1-173

FRONT PANEL B (AU-65-P,E,B) 6-1-174
FRONT PANEL B (AU-63/62-P) 6-1-174
FRONT PANEL B (AU-63/62-E,B) 6-1-175
FRONT PANEL C (AU-65-P) 6-1-176
FRONT PANEL C (AU-65-E,B) 6-1-177
FRONT SW VR 6-1-179
HEADPHONE VR (AU-65/63/62-P) 6-1-179
HEADPHONE VR (AU-65/63/62-E,B) 6-1-179
LOADING PHOTO 6-1-179
MECHA INTERFACE CIRCUIT 6-1-179
METER LAMP 6-1-180
POWER FILTER (AU-65/63/62-P) 6-1-181
POWER FILTER (AU-65/63/62-E,B) 6-1-181
POWER SUPPLY UNIT (AU-65/63/62-P) 6-1-181
POWER SUPPLY UNIT (AU-65/63/62-E,B) 6-1-183
RA & HA (AU-65-P) 6-1-185
RA & HA (AU-62-P) 6-1-187
RA & HA (AU-63-P) 6-1-188
RA & HA (AU-65-E,B) 6-1-189
RA & HA (AU-62-E,B) 6-1-192
RA & HA (AU-63-E,B) 6-1-193
TR SENSOR (1) 6-1-194
TR SENSOR (2) 6-1-194
UNLOADING PHOTO 6-1-194
VIDEO IN/OUT (AU-65-P) 6-1-194
VIDEO IN/OUT (AU-63/62-P,E,B) 6-1-195
VIDEO IN/OUT (AU-65-E,B) 6-1-196
YC IN/OUT 6-1-198
9P REMOTE 6-1-198

MECHANICAL REPLACEMENT PARTS LIST

CASING FRAME ASSEMBLY 6-2-1
MECHANICAL CHASSIS ASSEMBLY (1) 6-2-2
MECHANICAL CHASSIS ASSEMBLY (2) 6-2-5
MECHANICAL CHASSIS ASSEMBLY (3) 6-2-6
MECHANICAL CHASSIS ASSEMBLY (4) 6-2-8
FRONT PANEL ASSEMBLY (AU-65-P,E,B) 6-2-10
FRONT PANEL ASSEMBLY (AU-63/62-P,E,B) 6-2-12
REAR JACK PANEL ASSEMBLY 6-2-14
CHASSIS FRAME ASSEMBLY 6-2-17
CASSETTE COMPARTMENT ASSEMBLY 6-2-18
PACKING 6-2-20

P.C.BOARDS LIST (TREE STYLE)

P.C.BOARD NAME	VEP NUMBER (AU−65 NTSC)	VEP NUMBER (AU−63 NTSC)	VEP NUMBER (AU−62 NTSC)
1. W0 MOTHER 1	VEP80548A	VEP80548D	VEP80548C
2. W1 TBC & SYNCGEN	VEP88062A	VEP88062A	VEP88062A
3. W2 ENCODER	VEP88063A	VEP88063A	VEP88063A
4. W3 MOD & DEMOD	VEP83098A	VEP83098D	VEP83098C
5. W4 DEC & CTCM	VEP83099A	-----	-----
6. W5 SERVO	VEP82061A	VEP82061D	VEP82061C
7. W6 AUDIO	VEP84095A	VEP84095C	VEP84095C
8. W6S TC TRAP SUB	VEP80635A	-----	-----
9. B0 MOTHER 2	VEP80549A	VEP80549B	VEP80549A
10. B1 SYSTEM CONTROL	VEP86088A	VEP86088D	VEP86088C
11. AT POWER	-----	VEP82062A	-----
12. AUDIO IN/OUT	VEP84094A	VEP84094C	VEP84094C
13. AUDIO IN/OUT SUB	VEP80573A	VEP80573A	VEP80573A
14. AUDIO VR	VEP84101A	VEP84101C	VEP84101B
15. AUTO OFF LED	VEP00E08C	VEP00E08C	VEP00E08C
16. CASSETTE CARRIAGE LAMP	VEP00E72A	VEP00E72A	VEP00E72A
17. CASSETTE DETECT	VEP00E30A	VEP00E30A	VEP00E30A
18. EJECT INTERFACE	VEP80422B	VEP80422B	VEP80422B
19. EJECT SW	VEP80232A	VEP80232A	VEP80232A
20. FRONT INTERFACE	VEP80553A	VEP80553C	VEP80553B
21. FRONT LOADING	VEP80440A	VEP80440A	VEP80440A
22. FRONT MODE SELECT CIRCUIT	VEP80559A	VEP80559D	VEP80559C
23. FRONT PANEL A	VEP86050C	VEP86086A	VEP86086A
24. FRONT PANEL B	VEP66022A	VEP86076C	VEP86076C

P.C.BOARD NAME	VEP NUMBER (AU−65 NTSC)	VEP NUMBER (AU−63 NTSC)	VEP NUMBER (AU−62 NTSC)
25. FRONT PANEL C	VEP86048F	-----	-----
26. FRONT SW VR	VEP80552A	VEP80552A	VEP80552A
27. HEADPHONE VR	VEP80108A	VEP80108A	VEP80108A
28. LOADING PHOTO	VEP00E04B	VEP00E04B	VEP00E04B
29. MECHA INTERFACE CIRCUIT	VEP80550A	VEP80550A	VEP80550A
30. METER LAMP	VEP80333B	VEP80333B	VEP80333B
31. POWER FILTER	VEP81042A	VEP81042A	VEP81042A
32. POWER SUPPLY UNIT	VYK3004	VYK3004	VYK3004
33. RA & HA	VEP85015A	VEP85015C	VEP85015B
34. TR SENSOR (1)	VEP00E27C	VEP00E27C	VEP00E27C
35. TR SENSOR (2)	VEP00E28C	VEP00E28C	VEP00E28C
36. UNLOADING PHOTO	VEP00E25C	VEP00E25C	VEP00E25C
37. VIDEO IN/OUT	VEP83097A	VEP83097B	VEP83097B
38. YC IN/OUT	VEP80574A	VEP80574A	VEP80574A
39. 9P REMOTE	VEP80551A	VEP80551A	VEP80551A

P.C.BOARDS LIST (TREE STYLE)

P.C.BOARD NAME	VEP NUMBER (AU−65 PAL)	VEP NUMBER (AU−63 PAL)	VEP NUMBER (AU−62 PAL)
1. W0 MOTHER 1	VEP80548A	VEP80548D	VEP80548C
2. W1 TBC & SYNCGEN	VEP88062C	VEP88062C	VEP88062C
3. W2 ENCODER	VEP88063C	VEP88063C	VEP88063C
4. W2S SC SUB	└ VEP80632A	└ VEP80632A	└ VEP80632A
5. W3 MOD & DEMOD	VEP83098E	VEP83098F	VEP83098G
6. W3 SUB	└ VEP80667A	-----	-----
7. W4 DEC & CTCM	VEP83099B	-----	-----
8. W5 SERVO	VEP82061E	VEP82061F	VEP82061E
9. W6 AUDIO	VEP84095D	VEP84095E	VEP84095E
10. W6S TC TRAP SUB	└ VEP80635A	-----	-----
11. B0 MOTHER 2	VEP80549A	VEP80549B	VEP80549A
12. B1 SYSTEM CONTROL	VEP86088E	VEP86088F	VEP86088M
13. AT POWER	-----	VEP82062A	-----
14. AUDIO IN/OUT	VEP84094A	VEP84094C	VEP84094C
15. AUDIO IN/OUT SUB	└ VEP80573A	└ VEP80573A	└ VEP80573A
16. AUDIO VR	VEP84101A	VEP84101C	VEP84101B
17. AUTO OFF LED	VEP00E08C	VEP00E08C	VEP00E08C
18. CASSETTE CARRIAGE LAMP	VEP00E72A	VEP00E72A	VEP00E72A
19. CASSETTE DETECT	VEP00E30A	VEP00E30A	VEP00E30A
20. EJECT INTERFACE	VEP80422B	VEP80422B	VEP80422B
21. EJECT SW	VEP80232A	VEP80232A	VEP80232A
22. FRONT INTERFACE	VEP80631A	VEP80631B	VEP80631C
23. FRONT LOADING	VEP80440A	VEP80440A	VEP80440A
24. FRONT MODE SELECT CIRCUIT	VEP80559A	VEP80559D	VEP80559C

P.C.BOARD NAME	VEP NUMBER (AU−65 PAL)	VEP NUMBER (AU−63 PAL)	VEP NUMBER (AU−62 PAL)
25. FRONT PANEL A	VEP86050D	VEP86086A	VEP86086A
26. FRONT PANEL B	VEP66022A	VEP86076D	VEP86076D
27. FRONT PANEL C	VEP86048G	-----	-----
28. FRONT SW VR	VEP80552A	VEP80552A	VEP80552A
29. HEADPHONE VR	VEP80616A	VEP80616A	VEP80616A
30. LOADING PHOTO	VEP00E04B	VEP00E04B	VEP00E04B
31. MECHA INTERFACE CIRCUIT	VEP80550A	VEP80550A	VEP80550A
32. METER LAMP	VEP80333B	VEP80333B	VEP80333B
33. POWER FILTER	VEP81058A	VEP81058A	VEP81058A
34. POWER SUPPLY UNIT	VYK3637	VYK3637	VYK3637
35. RA & HA	VEP85015D	VEP85015F	VEP85015E
36. TR SENSOR (1)	VEP00E27C	VEP00E27C	VEP00E27C
37. TR SENSOR (2)	VEP00E28C	VEP00E28C	VEP00E28C
38. UNLOADING PHOTO	VEP00E25C	VEP00E25C	VEP00E25C
39. VIDEO IN/OUT	VEP83097C	VEP83097B	VEP83097B
40. YC IN/OUT	VEP80574A	VEP80574A	VEP80574A
41. 9P REMOTE	VEP80551A	VEP80551A	VEP80551A

ELECTRICAL REPLACEMENT PARTS LIST

Ref.No.		Part No.	Part Name & Description	Pcs	Remarks
		VEP80548A	P.C.BOARD W/COMPONENT	1	FOR AU-65-P,E.B
			WO MOTHER 1		
		VEP80548C	P.C.BOARD W/COMPONENT	1	FOR AU-62-P,E.B
			WO MOTHER 1		
		VEP80548D	P.C.BOARD W/COMPONENT	1	FOR AU-63-P,E.B
			WO MOTHER 1		
		VEP88062A	P.C.BOARD W/COMPONENT	1	
			W1 TBC & SYNCGEN		
		VEP88062C	P.C.BOARD W/COMPONENT	1	
			W1 TBC & SYNCGEN		
		VEP88063A	P.C.BOARD W/COMPONENT	1	
			W2 ENCODER		
		VEP88063C	P.C.BOARD W/COMPONENT	1	
			W2 ENCODER		
		VEP80632A	P.C.BOARD W/COMPONENT	1	ON VEP88063C
			W2S SC SUB		
		VEP83098A	P.C.BOARD W/COMPONENT	1	FOR AU-65-P
			W3 MOD & DEMOD		
		VEP83098C	P.C.BOARD W/COMPONENT	1	FOR AU-62-P
			W3 MOD & DEMOD		
		VEP83098D	P.C.BOARD W/COMPONENT	1	FOR AU-63-P
			W3 MOD & DEMOD		
		VEP83098E	P.C.BOARD W/COMPONENT	1	FOR AU-65-E,B
			W3 MOD & DEMOD		
		VEP83098F	P.C.BOARD W/COMPONENT	1	FOR AU-63-E,B
			W3 MOD & DEMOD		
		VEP83098G	P.C.BOARD W/COMPONENT	1	FOR AU-62-E,B
			W3 MOD & DEMOD		
		VEP80667A	P.C.BOARD W/COMPONENT	1	FOR AU-65-E,B
			W3 SUB		ON VEP83098E
		VEP83099A	P.C.BOARD W/COMPONENT	1	FOR AU-65-P
			W4 DEC & CTCM		
		VEP83099B	P.C.BOARD W/COMPONENT	1	FOR AU-65-E,B
			W4 DEC & CTCM		
		VEP82061A	P.C.BOARD W/COMPONENT	1	FOR AU-65-P
			W5 SERVO		
		VEP82061C	P.C.BOARD W/COMPONENT	1	FOR AU-62-P
			W5 SERVO		
		VEP82061D	P.C.BOARD W/COMPONENT	1	FOR AU-63-P
			W5 SERVO		
		VEP82061E	P.C.BOARD W/COMPONENT	1	FOR AU-65-E,B
			W5 SERVO		AU-62-E,B
		VEP82061F	P.C.BOARD W/COMPONENT	1	FOR AU-63-E,B
			W5 SERVO		
		VEP84095A	P.C.BOARD W/COMPONENT	1	FOR AU-65-P
			W6 AUDIO		
		VEP84095C	P.C.BOARD W/COMPONENT	1	FOR AU-63-P
			W6 AUDIO		AU-62-P
		VEP84095D	P.C.BOARD W/COMPONENT	1	FOR AU-65-E,B
			W6 AUDIO		
		VEP84095E	P.C.BOARD W/COMPONENT	1	FOR AU-63-E,B
			W6 AUDIO		AU-62-E,B
		VEP80635A	P.C.BOARD W/COMPONENT	1	FOR AU-65-E,B
			W6S TC TRAP SUB		ON VEP84095D
		VEP80549A	P.C.BOARD W/COMPONENT	1	FOR AU-65-P,E,B
			BO MOTHER 2		AU-62-P,E,B
		VEP80549B	P.C.BOARD W/COMPONENT	1	FOR AU-63-P,E,B
			BO MOTHER 2		
		VEP86088A	P.C.BOARD W/COMPONENT	1	FOR AU-65-P
			B1 SYSTEM CONTROL		
		VEP86088C	P.C.BOARD W/COMPONENT	1	FOR AU-62-P
			B1 SYSTEM CONTROL		
		VEP86088D	P.C.BOARD W/COMPONENT	1	FOR AU-63-P
			B1 SYSTEM CONTROL		
		VEP86088E	P.C.BOARD W/COMPONENT	1	FOR AU-65-E,B
			B1 SYSTEM CONTROL		
		VEP86088F	P.C.BOARD W/COMPONENT	1	FOR AU-63-E,B

Ref.No.		Part No.	Part Name & Description	Pcs	Remarks
			B1 SYSTEM CONTROL		
		VEP86088M	P.C.BOARD W/COMPONENT	1	FOR AU-62-E,B
			B1 SYSTEM CONTROL		
		VEP82062A	P.C.BOARD W/COMPONENT	1	FOR AU-63-P,E,B
			AT POWER		
		VEP84094A	P.C.BOARD W/COMPONENT	1	FOR AU-65-P,E,B
			AUDIO IN/OUT		
		VEP84094C	P.C.BOARD W/COMPONENT	1	FOR AU-63-P,E,B
			AUDIO IN/OUT		AU-62-P,E,B
		VEP80573A	P.C.BOARD W/COMPONENT	1	
			AUDIO IN/OUT SUB		
		VEP84101A	P.C.BOARD W/COMPONENT	1	FOR AU-65-P,E,B
			AUDIO VR		
		VEP84101B	P.C.BOARD W/COMPONENT	1	FOR AU-62-P,E,B
			AUDIO VR		
		VEP84101C	P.C.BOARD W/COMPONENT	1	FOR AU-63-P,E,B
			AUDIO VR		
		VEP00E08C	P.C.BOARD W/COMPONENT	1	
			AUTO OFF LED		
		VEP00E72A	P.C.BOARD W/COMPONENT	1	
			CASSETTE CARRIAGE LAMP		
		VEP00E30A	P.C.BOARD W/COMPONENT	1	
			CASSETTE DETECT		
		VEP80422B	P.C.BOARD W/COMPONENT	1	
			EJECT INTERFACE		
		VEP80232A	P.C.BOARD W/COMPONENT	1	
			EJECT SW		
		VEP80553A	P.C.BOARD W/COMPONENT	1	FOR AU-65-P
			FRONT INTERFACE		
		VEP80553B	P.C.BOARD W/COMPONENT	1	FOR AU-62-P
			FRONT INTERFACE		
		VEP80553C	P.C.BOARD W/COMPONENT	1	FOR AU-63-P
			FRONT INTERFACE		
		VEP80631A	P.C.BOARD W/COMPONENT	1	FOR AU-65-E,B
			FRONT INTERFACE		
		VEP80631B	P.C.BOARD W/COMPONENT	1	FOR AU-63-E,B
			FRONT INTERFACE		
		VEP80631C	P.C.BOARD W/COMPONENT	1	FOR AU-62-E,B
			FRONT INTERFACE		
		VEP80440A	P.C.BOARD W/COMPONENT	1	
			FRONT LOADING		
		VEP80559A	P.C.BOARD W/COMPONENT	1	FOR AU-65-P,E,B
			FRONT MODE SELECT CIRCUIT		
		VEP80559C	P.C.BOARD W/COMPONENT	1	FOR AU-62-P,E,B
			FRONT MODE SELECT CIRCUIT		
		VEP80559D	P.C.BOARD W/COMPONENT	1	FOR AU-63-P,E,B
			FRONT MODE SELECT CIRCUIT		
		VEP86050C	P.C.BOARD W/COMPONENT	1	FOR AU-65-P
			FRONT PANEL A		
		VEP86050D	P.C.BOARD W/COMPONENT	1	FOR AU-65-E,B
			FRONT PANEL A		
		VEP86086A	P.C.BOARD W/COMPONENT	1	FOR AU-63-P,E,B
			FRONT PANEL A		FOR AU-62-P,E,B
		VEP66022A	P.C.BOARD W/COMPONENT	1	FOR AU-65-P,E,B
			FRONT PANEL B		
		VEP86076C	P.C.BOARD W/COMPONENT	1	FOR AU-63-P
			FRONT PANEL B		FOR AU-62-P
		VEP86076D	P.C.BOARD W/COMPONENT	1	FOR AU-63-E,B
			FRONT PANEL B		FOR AU-62-E,B
		VEP86048F	P.C.BOARD W/COMPONENT	1	FOR AU-65-P
			FRONT PANEL C		

Refer to the P.C.BOARDS LIST, page 6-1-1, before using this page.

Ref.No.		Part No.	Part Name & Description	Pcs	Remarks
		VEP86048G	P.C.BOARD W/COMPONENT	1	FOR AU-65-E,B
			FRONT PANEL C		
		VEP80552A	P.C.BOARD W/COMPONENT	1	
			FRONT SW VR		
		VEP80108A	P.C.BOARD W/COMPONENT	1	
			HEADPHONE VR		
		VEP80616A	P.C.BOARD W/COMPONENT	1	
			HEADPHONE VR		
		VEP00E04B	P.C.BOARD W/COMPONENT	1	
			LOADING PHOTO		
		VEP80550A	P.C.BOARD W/COMPONENT	1	
			MECHA INTERFACE CIRCUIT		
		VEP80333B	P.C.BOARD W/COMPONENT	1	
			METER LAMP		
		VEP81042A	P.C.BOARD W/COMPONENT	1	
			POWER FILTER		
		VEP81058A	P.C.BOARD W/COMPONENT	1	
			POWER FILTER		
		VYK3004	P.C.BOARD W/COMPONENT	1	
			POWER SUPPLY UNIT		
		VYK3637	P.C.BOARD W/COMPONENT	1	
			POWER SUPPLY UNIT		
		VEP85015A	P.C.BOARD W/COMPONENT	1	FOR AU-65-P
			RA & HA		
		VEP85015B	P.C.BOARD W/COMPONENT	1	FOR AU-62-P
			RA & HA		
		VEP85015C	P.C.BOARD W/COMPONENT	1	FOR AU-63-P
			RA & HA		
		VEP85015D	P.C.BOARD W/COMPONENT	1	FOR AU-65-E,B
			RA & HA		
		VEP85015E	P.C.BOARD W/COMPONENT	1	FOR AU-62-E,B
			RA & HA		
		VEP85015F	P.C.BOARD W/COMPONENT	1	FOR AU-63-E,B
			RA & HA		
		VEP00E27C	P.C.BOARD W/COMPONENT	1	
			TR SENSOR (1)		
		VEP00E28C	P.C.BOARD W/COMPONENT	1	
			TR SENSOR (2)		
		VEP00E25C	P.C.BOARD W/COMPONENT	1	
			UNLOADING PHOTO		
		VEP83097A	P.C.BOARD W/COMPONENT	1	FOR AU-65-P
			VIDEO IN/OUT		
		VEP83097B	P.C.BOARD W/COMPONENT	1	FOR AU-63-P,E,B
			VIDEO IN/OUT		FOR AU-62-P,E,B
		VEP83097C	P.C.BOARD W/COMPONENT	1	FOR AU-65-E,B
			VIDEO IN/OUT		
		VEP80574A	P.C.BOARD W/COMPONENT	1	
			YC IN/OUT		
		VEP80551A	P.C.BOARD W/COMPONENT	1	
			9P REMOVE		

Ref.No.		Part No.	Part Name & Description	Pcs	Remarks

Refer to the P.C.BOARDS LIST, page 6-1-1, before using this page.

Ref.No.		Part No.	Part Name & Description	Pcs	Remarks
	■	VEP80548A	P.C.BOARD W/COMPONENT WO MOTHER 1		FOR AU-65-P,E,B
			CAPACITORS		
C1,C2		ECEA1CU221	E.CAPACITOR 16V 220U	2	
CN8		VJP1229T	CONNECTOR(MALE) 2P	1	
CN9		VJP1230T	CONNECTOR(MALE)	1	
CN12-14		VJP1511T	CONNECTOR(MALE)	3	
CN15		VJP1932T	CONNECTOR (MALE)	1	
CN17		VJP1235T	CONNECTOR(MALE) 8P	1	
CN20		VJP2893A064	CONNECTOR (MALE)	1	
CN21		VJP1233T	CONNECTOR(MALE) 6P	1	
CN22,23		VJP1232T	CONNECTOR(MALE) 5P	2	
CN24		VJP1931T	CONNECTOR (MALE)	1	
CN25		VJP1237T	CONNECTOR(MALE) 10P	1	
CN26		VJP1931T	CONNECTOR (MALE)	1	
CN28		VJP1231T	CONNECTOR(MALE) 4P	1	
CN30,31		VJP1932T	CONNECTOR (MALE)	2	
CN36		VJP1239T	CONNECTOR(MALE) 12P	1	
CN39		VJP1239T	CONNECTOR(MALE) 12P	1	
CN40		VJP1929T	CONNECTOR (MALE)	1	
CN41,42		VJP1932T	CONNECTOR (MALE)	2	
CN46		VJP1252T	CONNECTOR(MALE) 12P	1	
CN48		VJP1237T	CONNECTOR(MALE) 10P	1	
CN600		VJP1230T	CONNECTOR(MALE) 3P	1	
POWER1		VJP1709	CONNECTOR (MALE)	1	
POWER2		VJP1627	CONNECTOR(MALE)	1	
W4F		VJS2898A100	CONNECTOR (FEMALE)	1	
W4R		VJS2898A100	CONNECTOR (FEMALE)	1	
			MISCELLANEOUS		
		VJF0004	CLAMPER	1	
		VMP2617	P.C.B. HOLDER ANGLE	1	
		VMP2618	P.C.B. HOLDER ANGLE	1	
		VMP2619	P.C.B. HOLDER ANGLE	1	
		XNG26E	NUT	8	
		XTV26+10F	SCREW	24	
		XWA26B	WASHER	8	
		XWG26	NUT	8	

Refer to the P.C.BOARDS LIST, page 6-1-1, before using this page.

Ref.No.		Part No.	Part Name & Description	Pcs	Remarks
	■	VEP80548C	P.C.BOARD W/COMPONENT WO MOTHER 1		FOR AU-62-P,E,B
			CAPACITORS		
C1,C2		ECEA1CU221	E.CAPACITOR 16V 220U	2	
CN8		VJP1229T	CONNECTOR(MALE) 2P	1	
CN12-14		VJP1511T	CONNECTOR(MALE)	3	
CN15		VJP1932T	CONNECTOR (MALE)	1	
CN17		VJP1235T	CONNECTOR(MALE) 8P	1	
CN20		VJP2893A064	CONNECTOR (MALE)	1	
CN21		VJP1233T	CONNECTOR(MALE) 6P	1	
CN22,23		VJP1232T	CONNECTOR(MALE) 5P	2	
CN24		VJP1931T	CONNECTOR (MALE)	1	
CN25		VJP1237T	CONNECTOR(MALE) 10P	1	
CN26		VJP1931T	CONNECTOR (MALE)	1	
CN28		VJP1231T	CONNECTOR(MALE) 4P	1	
CN30,31		VJP1932T	CONNECTOR (MALE)	2	
CN36		VJP1239T	CONNECTOR(MALE) 12P	1	
CN39		VJP1239T	CONNECTOR(MALE) 12P	1	
CN40		VJP1929T	CONNECTOR (MALE)	1	
CN41,42		VJP1932T	CONNECTOR (MALE)	2	
CN46		VJP1252T	CONNECTOR(MALE) 12P	1	
CN48		VJP1237T	CONNECTOR(MALE) 10P	1	
CN600		VJP1230T	CONNECTOR(MALE) 3P	1	
POWER1		VJP1709	CONNECTOR (MALE)	1	
POWER2		VJP1627	CONNECTOR(MALE)	1	
			MISCELLANEOUS		
		VJF0004	CLAMPER	1	
		VJF0304	CLAMPER	4	
		VMP2617	P.C.B. HOLDER ANGLE	1	
		VMP2618	P.C.B. HOLDER ANGLE	1	
		VMP2619	P.C.B. HOLDER ANGLE	1	
		XNG26E	NUT	8	
		XTV26+10F	SCREW	20	
		XWA26B	WASHER	8	
		XWG26	WASHER	8	

Refer to the P.C.BOARDS LIST, page 6-1-1, before using this page.

Ref.No.		Part No.	Part Name & Description	Pcs	Remarks
	■	VEP80548D	P.C.BOARD W/COMPONENT WO MOTHER 1		FOR AU-63-P,E,B
			CAPACITORS		
C1,C2		ECEA1CU221	E.CAPACITOR 16V 220U	2	
CN8		VJP1229T	CONNECTOR(MALE) 2P	1	
CN12-14		VJP1511T	CONNECTOR(MALE)	3	
CN15		VJP1932T	CONNECTOR (MALE)	1	
CN17		VJP1235T	CONNECTOR(MALE) 8P	1	
CN20		VJP2893A064	CONNECTOR (MALE)	1	
CN21		VJP1233T	CONNECTOR(MALE) 6P	1	
CN22,23		VJP1232T	CONNECTOR(MALE) 5P	2	
CN24		VJP1931T	CONNECTOR (MALE)	1	
CN25		VJP1237T	CONNECTOR(MALE) 10P	1	
CN26		VJP1931T	CONNECTOR (MALE)	1	
CN28		VJP1231T	CONNECTOR(MALE) 4P	1	
CN30,31		VJP1932T	CONNECTOR (MALE)	2	
CN34		VJP1246T	CONNECTOR(MALE) 6P	1	
CN35		VJP1251T	CONNECTOR(MALE) 11P	1	
CN36		VJP1239T	CONNECTOR(MALE) 12P	1	
CN39		VJP1239T	CONNECTOR(MALE) 12P	1	
CN40		VJP1929T	CONNECTOR (MALE)	1	
CN41,42		VJP1932T	CONNECTOR (MALE)	2	
CN46		VJP1252T	CONNECTOR(MALE) 12P	1	
CN48		VJP1237T	CONNECTOR(MALE) 10P	1	
CN600		VJP1230T	CONNECTOR(MALE) 3P	1	
POWER1		VJP1709	CONNECTOR (MALE)	1	
POWER2		VJP1627	CONNECTOR(MALE)	1	
			MISCELLANEOUS		
		VJF0004	CLAMPER	1	
		VJF0304	CLAMPER	4	
		VMP2617	P.C.B. HOLDER ANGLE	1	
		VMP2618	P.C.B. HOLDER ANGLE	1	
		VMP2619	P.C.B. HOLDER ANGLE	1	
		XNG26E	NUT	8	
		XTV26+10F	SCREW	20	
		XWA26B	WASHER	8	
		XWG26	NUT	8	

Refer to the P.C.BOARDS LIST, page 6-1-1, before using this page.

Ref.No.		Part No.	Part Name & Description	Pcs	Remarks
	■	VEP88062A	P.C.BOARD W/COMPONENT		
			W1 TBC & SYNCGEN		
			CAPACITORS		
C1		ECUM1E104ZFN	C.CAPACITOR CH 25V 0.1U	1	
C2		ECEA0JU101	E.CAPACITOR 6.3V 100U	1	
C3		ECUM1E104ZFN	C.CAPACITOR CH 25V 0.1U	1	
C4		ECEA0JU101	E.CAPACITOR 6.3V 100U	1	
C5		ECUM1E104ZFN	C.CAPACITOR CH 25V 0.1U	1	
C6		ECEA1CU101	E.CAPACITOR 16V 100U	1	
C7		ECUM1E104ZFN	C.CAPACITOR CH 25V 0.1U	1	
C8		ECEA1CU101	E.CAPACITOR 16V 100U	1	
C9		ECUM1E104ZFN	C.CAPACITOR CH 25V 0.1U	1	
C10		ECEA1AU101	E.CAPACITOR 10V 100U	1	
C11		ECUM1E104ZFN	C.CAPACITOR CH 25V 0.1U	1	
C12		ECEA1CU101	E.CAPACITOR 16V 100U	1	
C13		ECUM1E104ZFN	C.CAPACITOR CH 25V 0.1U	1	
C14		ECEA1AU101	E.CAPACITOR 10V 100U	1	
C15,16		ECUM1E104ZFN	C.CAPACITOR CH 25V 0.1U	2	
C17		ECUM1C104KBN	C.CAPACITOR CH 16V 0.1U	1	
C18-22		ECUM1E104ZFN	C.CAPACITOR CH 25V 0.1U	5	
C23		ECEA1CU220	E.CAPACITOR 16V 22U	1	
C24		ECUM1E104ZFN	C.CAPACITOR CH 25V 0.1U	1	
C25		ECEA1HU2R2	E.CAPACITOR 50V 2.2U	1	
C26		ECEA1CU220	E.CAPACITOR 16V 22U	1	
C27		ECUM1E104ZFN	C.CAPACITOR CH 25V 0.1U	1	
C28		ECEA1CU220	E.CAPACITOR 16V 22U	1	
C29-33		ECUM1E104ZFN	C.CAPACITOR CH 25V 0.1U	5	
C34		ECEA1HU2R2	E.CAPACITOR 50V 2.2U	1	
C35		ECEA1CU220	E.CAPACITOR 16V 22U	1	
C36		ECUM1E104ZFN	C.CAPACITOR CH 25V 0.1U	1	
C37		ECEA1AU221	E.CAPACITOR 10V 220U	1	
C38		ECEA1HU2R2	E.CAPACITOR 50V 2.2U	1	
C39		ECUM1E104ZFN	C.CAPACITOR CH 25V 0.1U	1	
C40		ECEA0JU101	E.CAPACITOR 6.3V 100U	1	
C41-48		ECUM1C104KBN	C.CAPACITOR CH 16V 0.1U	8	
C49-52		ECUM1E104ZFN	C.CAPACITOR CH 25V 0.1U	4	
C53		ECUM1C104KBN	C.CAPACITOR CH 16V 0.1U	1	
C57,58		ECUM1H101JCN	C.CAPACITOR CH 50V 100P	2	
C59,60		ECUM1C104KBN	C.CAPACITOR CH 16V 0.1U	2	
C61-64		ECUM1E104ZFN	C.CAPACITOR CH 25V 0.1U	4	
C65		ECUM1C104KBN	C.CAPACITOR CH 16V 0.1U	1	
C66		ECUM1E104ZFN	C.CAPACITOR CH 25V 0.1U	1	
C67-73		ECUM1C104KBN	C.CAPACITOR CH 16V 0.1U	7	
C74-78		ECUM1E104ZFN	C.CAPACITOR CH 25V 0.1U	5	
C79		ECEA1CU220	E.CAPACITOR 16V 22U	1	
C81		ECQV1H474JZ	P.CAPACITOR 50V 0.47U	1	
C201		ECEA1AU470	E.CAPACITOR 10V 47U	1	
C202,03		ECUM1H103KBN	C.CAPACITOR CH 50V 0.01U	2	
C204		ECUM1H181JCN	C.CAPACITOR CH 50V 180P	1	
C205		ECUM1H103KBN	C.CAPACITOR CH 50V 0.01U	1	
C206		ECUM1H180JCN	C.CAPACITOR CH 50V 18P	1	
C207		ECUM1H680JCN	C.CAPACITOR CH 50V 68P	1	
C208,09		ECUM1C104KBN	C.CAPACITOR CH 16V 0.1U	2	
C210		ECEA1HN010S	E.CAPACITOR 50V 1U	1	
C211		ECUM1E104ZFN	C.CAPACITOR CH 25V 0.1U	1	
C212		ECEA1CU470	E.CAPACITOR 16V 47U	1	
C213		ECUM1H330JCN	C.CAPACITOR CH 50V 33P	1	
C214		ECUM1H101JCN	C.CAPACITOR CH 50V 100P	1	
C215		ECUM1H181JCN	C.CAPACITOR CH 50V 180P	1	
C216		ECUM1H101JCN	C.CAPACITOR CH 50V 100P	1	
C217		ECUM1H220JCN	C.CAPACITOR CH 50V 22P	1	
C218		ECUM1H470JCN	C.CAPACITOR CH 50V 47P	1	
C219-22		ECUM1E104ZFN	C.CAPACITOR CH 25V 0.1U	4	
C223,24		ECUM1H150JCN	C.CAPACITOR CH 50V 15P	2	
C225		ECUM1H820JCN	C.CAPACITOR CH 50V 82P	1	
C226		ECEA1CU100	E.CAPACITOR 16V 10U	1	
C227		ECEA1CU470	E.CAPACITOR 16V 47U	1	

Ref.No.		Part No.	Part Name & Description	Pcs	Remarks
C228		ECUM1E104ZFN	C.CAPACITOR CH 25V 0.1U	1	
C229		ECUM1H103KBN	C.CAPACITOR CH 50V 0.01U	1	
C230		ECUM1E104ZFN	C.CAPACITOR CH 25V 0.1U	1	
C231		ECEA1HN2R2S	E.CAPACITOR 50V 2.2U	1	
C232		ECUM1E104ZFN	C.CAPACITOR CH 25V 0.1U	1	
C233		ECUM1H270JCN	C.CAPACITOR CH 50V 27P	1	
C234		ECV1ZW20X53T	V.CAPACITOR 20P	1	
C235		ECUM1H102JCN	C.CAPACITOR CH 50V 1000P	1	
C236		ECUM1E104ZFN	C.CAPACITOR CH 25V 0.1U	1	
C237		ECEA1CU100	E.CAPACITOR 16V 10U	1	
C238,39		ECUM1H470JCN	C.CAPACITOR CH 50V 47P	2	
C240		ECUM1H103KBN	C.CAPACITOR CH 50V 0.01U	1	
C241,42		ECUM1E104ZFN	C.CAPACITOR CH 25V 0.1U	2	
C243		ECUM1C104KBN	C.CAPACITOR CH 16V 0.1U	1	
C244-46		ECUM1E104ZFN	C.CAPACITOR CH 25V 0.1U	3	
C247		ECUM1H390JCN	C.CAPACITOR CH 50V 39P	1	
C248		ECUM1E104ZFN	C.CAPACITOR CH 25V 0.1U	1	
C249		ECUM1H270JCN	C.CAPACITOR CH 50V 27P	1	
C250		ECEA1CU470	E.CAPACITOR 16V 47U	1	
C251		ECEA1AU470	E.CAPACITOR 10V 47U	1	
C252		ECUM1E104ZFN	C.CAPACITOR CH 25V 0.1U	1	
C253		ECEA1CU100	E.CAPACITOR 16V 10U	1	
C254,55		ECUM1E104ZFN	C.CAPACITOR CH 25V 0.1U	2	
C256		ECUM1H103KBN	C.CAPACITOR CH 50V 0.01U	1	
C257		ECUM1E104ZFN	C.CAPACITOR CH 25V 0.1U	1	
C258		ECEA1HN010S	E.CAPACITOR 50V 1U	1	
C259		ECUM1E104ZFN	C.CAPACITOR CH 25V 0.1U	1	
C260		ECEA1AU470	E.CAPACITOR 10V 47U	1	
C261		ECUM1E104ZFN	C.CAPACITOR CH 25V 0.1U	1	
C262		ECEA1AU470	E.CAPACITOR 10V 47U	1	
C263		ECUM1E104ZFN	C.CAPACITOR CH 25V 0.1U	1	
C264		ECEA1CN100S	E.CAPACITOR 16V 10U	1	
C265		ECUM1H102JCN	C.CAPACITOR CH 50V 1000P	1	
C266		ECUM1H150JCN	C.CAPACITOR CH 50V 15P	1	
C267,68		ECUM1E104ZFN	C.CAPACITOR CH 25V 0.1U	2	
C270		ECUM1H103KBN	C.CAPACITOR CH 50V 0.01U	1	
C271-73		ECUM1E104ZFN	C.CAPACITOR CH 25V 0.1U	3	
C274		ECUM1C104KBN	C.CAPACITOR CH 16V 0.1U	1	
C275		ECUM1H102JCN	C.CAPACITOR CH 50V 1000P	1	
C276		ECUM1E104ZFN	C.CAPACITOR CH 25V 0.1U	1	
C277		ECEA1AU470	E.CAPACITOR 10V 47U	1	
C279		ECUM1H103KBN	C.CAPACITOR CH 50V 0.01U	1	
C280,81		ECUM1E104ZFN	C.CAPACITOR CH 25V 0.1U	2	
C282		ECUM1C104KBN	C.CAPACITOR CH 16V 0.1U	1	
C283		ECUM1H102JCN	C.CAPACITOR CH 50V 1000P	1	
C284		ECUM1E104ZFN	C.CAPACITOR CH 25V 0.1U	1	
C286-91		ECUM1E104ZFN	C.CAPACITOR CH 25V 0.1U	6	
C292		ECUM1H100DCN	C.CAPACITOR CH 50V 10P	1	
C401		ECQM1H222JF	P.CAPACITOR 50V 2200P	1	
C402		ECQM1H223JF	P.CAPACITOR 50V 0.022U	1	
C403		ECQM1H222JF	P.CAPACITOR 50V 2200P	1	
C404		ECEA1AU101	E.CAPACITOR 10V 100U	1	
C406		ECQM1H102JF	P.CAPACITOR 50V 1000P	1	
C409		ECUM1E104ZFN	C.CAPACITOR CH 25V 0.1U	1	
C410,11		ECUM1H820JCN	C.CAPACITOR CH 50V 82P	2	
C412		ECUM1E104ZFN	C.CAPACITOR CH 25V 0.1U	1	
C413		ECUM1H820JCN	C.CAPACITOR CH 50V 82P	1	
C414-18		ECUM1E104ZFN	C.CAPACITOR CH 25V 0.1U	5	
C423		ECUM1H391JCN	C.CAPACITOR CH 50V 390P	1	
C424		ECUM1E104ZFN	C.CAPACITOR CH 25V 0.1U	1	
C425		ECQM1H102JF	P.CAPACITOR 50V 1000P	1	
C426		ECUM1H221JCN	C.CAPACITOR CH 50V 220P	1	
C427		ECQM1H102JF	P.CAPACITOR 50V 1000P	1	
C438		ECUM1H221JCN	C.CAPACITOR CH 50V 220P	1	
C441		ECQM1H102JF	P.CAPACITOR 50V 1000P	1	
C442		ECUM1H221JCN	C.CAPACITOR CH 50V 220P	1	
C443,44		ECUM1E104ZFN	C.CAPACITOR CH 25V 0.1U	2	
C452		ECUM1H151JCN	C.CAPACITOR CH 50V 150P	1	
C453		ECQM1H223JF	P.CAPACITOR 50V 0.022U	1	
C454		ECQM1H122JF	P.CAPACITOR 50V 1200P	1	
C455		ECQM1H104JF	P.CAPACITOR 50V 0.1U	1	
C456		ECEA1CN100S	E.CAPACITOR 16V 10U	1	
C457		ECUM1H561JCN	C.CAPACITOR CH 50V 560P	1	
C458		ECUM1E104ZFN	C.CAPACITOR CH 25V 0.1U	1	
C459		ECEA1AU220	E.CAPACITOR 10V 22U	1	

Refer to the P.C.BOARDS LIST, page 6-1-1, before using this page.

Ref.No.		Part No.	Part Name & Description	Pcs	Remarks
C460,61		ECUM1H101JCN	C.CAPACITOR CH 50V 100P	2	
C462		ECUM1E104ZFN	C.CAPACITOR CH 25V 0.1U	1	
C463		ECEA1AU220	E.CAPACITOR 10V 22U	1	
C464		ECUM1H103ZFN	C.CAPACITOR CH 50V 0.01U	1	
C465		ECUM1H560JCN	C.CAPACITOR CH 50V 56P	1	
C467		ECUM1E104ZFN	C.CAPACITOR CH 25V 0.1U	1	
C468		ECEA1AU220	E.CAPACITOR 10V 22U	1	
C469,70		ECUM1E104ZFN	C.CAPACITOR CH 25V 0.1U	2	
C471		ECUM1H151JCN	C.CAPACITOR CH 50V 150P	1	
C473		ECUM1E104ZFN	C.CAPACITOR CH 25V 0.1U	1	
C474		ECEA1AU101	E.CAPACITOR 10V 100U	1	
C475		ECUM1E104ZFN	C.CAPACITOR CH 25V 0.1U	1	
C476		ECEA1CU101	E.CAPACITOR 16V 100U	1	
C477		ECUM1E104ZFN	C.CAPACITOR CH 25V 0.1U	1	
C478		ECEA1CU101	E.CAPACITOR 16V 100U	1	
C479		ECQM1H103JF	P.CAPACITOR 50V 0.01U	1	
C480		ECUM1H470JCN	C.CAPACITOR CH 50V 47P	1	
C481		ECUM1H181JCN	C.CAPACITOR CH 50V 180P	1	
C482		ECQM1H122JF	P.CAPACITOR 50V 1200P	1	
C483		ECQM1H103JF	P.CAPACITOR 50V 0.01U	1	
C484		ECUM1E104ZFN	C.CAPACITOR CH 25V 0.1U	1	
C485		ECEA1AU220	E.CAPACITOR 10V 22U	1	
C486		ECUM1E104ZFN	C.CAPACITOR CH 25V 0.1U	1	
C487		ECEA1HUR47	E.CAPACITOR 50V 0.47U	1	
C488		ECEA1HN010S	E.CAPACITOR 50V 1U	1	
C489		ECEA1HU2R2	E.CAPACITOR 50V 2.2U	1	
C490		ECUM1H330JCN	C.CAPACITOR CH 50V 33P	1	
C491		ECQM1H223JF	P.CAPACITOR 50V 0.022U	1	
C504		ECUM1H470JCN	C.CAPACITOR CH 50V 47P	1	
C514		ECUM1E104ZFN	C.CAPACITOR CH 25V 0.1U	1	
C517		ECUM1H470JCN	C.CAPACITOR CH 50V 47P	1	
C518-20		ECUM1E104ZFN	C.CAPACITOR CH 25V 0.1U	3	
C521		ECEA1CU101	E.CAPACITOR 16V 100U	1	
C522		ECUM1E104ZFN	C.CAPACITOR CH 25V 0.1U	1	
C523		ECEA1CU101	E.CAPACITOR 16V 100U	1	
C524		ECUM1E104ZFN	C.CAPACITOR CH 25V 0.1U	1	
C525		ECEA1AU101	E.CAPACITOR 10V 100U	1	
C528		ECEA1AU220	E.CAPACITOR 10V 22U	1	
C529		ECUM1E104ZFN	C.CAPACITOR CH 25V 0.1U	1	
C551		ECUM1E104ZFN	C.CAPACITOR CH 25V 0.1U	1	
C600-09		ECUM1E104ZFN	C.CAPACITOR CH 25V 0.1U	10	
C614,15		ECUM1E104ZFN	C.CAPACITOR CH 25V 0.1U	2	
D201		MA151WA	DIODE	1	
D202		MA335R	DIODE	1	
D203-10		MA151K	DIODE	8	
D211		MA151WK	DIODE	1	
D212		MA151K	DIODE	1	
D401		1SS101	DIODE	1	
D402		MA151K	DIODE	1	
D404		MA153	DIODE	1	
D406		MA151K	DIODE	1	
D407		MA335R	DIODE	1	
D408-10		MA151K	DIODE	3	
D416,17		MA151K	DIODE	2	
IC1,C2		CY7C128-45PC	IC	2	
IC4,C5		MC74HC574F	IC	2	(R)
IC7		UPD65013F101	IC	1	
IC9		MC74HC574F	IC	1	(R)
IC11		MC74HC08AF	IC	1	
IC13,14		CY7C128-45PC	IC	2	
IC15,16		MC74HC574F	IC	2	(R)
IC17		UPD65012F475	IC	1	
IC18,19		MC74HC574F	IC	2	(R)
IC20		N74F02D	IC	1	
IC21		N74F04D	IC	1	
IC22		MC74HC574F	IC	1	(R)
IC24		MSM77H021GSK	IC	1	
IC25		MSM71056	IC	1	
IC26		VSI0192	IC	1	

Ref.No.		Part No.	Part Name & Description	Pcs	Remarks
IC27		N74F02D	IC	1	
IC28-35		MB8464A80LPF	IC	8	
IC36		MC74HC574F	IC	1	(R)
IC37		MSM76H012GSK	IC	1	
IC38-44		MB8464A80LPF	IC	7	
IC45		UPD65013FA44	IC	1	
IC46-48		MB40778PF	IC	3	
IC49		AN78L09	IC	1	
IC50		AN79L09	IC	1	
IC51		AN78N05	IC	1	
IC53		N74F109D	IC	1	
IC54,55		RC082BM	IC	2	
IC57		RC082BM	IC	1	
IC59		RC082BM	IC	1	
IC201		AN91A12S	IC	1	
IC202		MN53015VZW	IC	1	
IC203		UPD65024F152	IC	1	
IC204		UPD65040F144	IC	1	
IC205		NE521D	IC	1	
IC206,07		MN74HC221S	IC	2	
IC208		MC74HC32AF	IC	1	
IC209		MC14053BF	IC	1	(R)
IC210		RC082BM	IC	1	
IC211		NE521D	IC	1	
IC212		MC74HC04AF	IC	1	
IC213		MC74HC125AF	IC	1	
IC214		MC74HC02AF	IC	1	
IC216,17		UPC4082G	IC	2	
IC218		DN74LS04NS	IC	1	
IC220		MC74HC74AF	IC	1	
IC221,22		RC082BM	IC	2	
IC223		MC74HC04AF	IC	1	
IC224		MC74HC08AF	IC	1	
IC225,26		MC74HC04AF	IC	2	
IC228		AN78L09	IC	1	
IC229		AN79L05	IC	1	
IC230		AN78L09	IC	1	
IC231-33		AN78L05	IC	3	
IC401		MC74HC86F	IC	1	
IC402		SN74LS221NS	IC	1	
IC403		MC74HC00AF	IC	1	
IC405		UPD65022B264	IC	1	
IC409		MC74HC00AF	IC	1	
IC410		SN75452BPS	IC	1	
IC411		UPC319G2	IC	1	
IC412		MC74HC04AF	IC	1	
IC413		SN74LS123NS	IC	1	
IC415		SN74LS123NS	IC	1	
IC416		UPD65022C252	IC	1	
IC418		SN74LS123NS	IC	1	
IC419		MC74HC4053F	IC	1	
IC420,21		RC082BM	IC	2	
IC422		AN79L05	IC	1	
IC423		AN78L05	IC	1	
IC424		MC1648P	IC	1	
IC425		MC10125L	IC	1	
IC426		N74F86D	IC	1	
IC427,28		N74F109D	IC	2	
IC429		SN74LS221NS	IC	1	
IC430		AN79L05	IC	1	
IC431		AN79L09	IC	1	
IC432		AN78L09	IC	1	
IC433		SN74LS123NS	IC	1	
IC434		SN74LS221NS	IC	1	
IC435		RC082BM	IC	1	
IC436		MC74HC4053F	IC	1	
IC437		AN78L05	IC	1	
IC438		UPC358G2	IC	1	
IC439		SN74LS624NS	IC	1	
IC441		MC74HC74AF	IC	1	
IC442		MC74HC125AF	IC	1	
IC443		MC74HC00AF	IC	1	
IC444		RC082BM	IC	1	
IC445		NE521D	IC	1	
IC446		MC74HC00AF	IC	1	

Refer to the P.C.BOARDS LIST, page 6-1-1, before using this page.

Ref.No.		Part No.	Part Name & Description	Pcs	Remarks
IC470		UPD65022F258	IC	1	
IC471		N74F04D	IC	1	
IC472		SN74LS04NS	IC	1	
IC473		MC74HC164F	IC	1	
IC474		AN79L09	IC	1	
IC475		AN78L09	IC	1	
IC476		AN79L05	IC	1	
IC477		N74F157AD	IC	1	
IC478		MC74HC00AF	IC	1	
IC479		UPD65025B030	IC	1	
IC480		AN78L05	IC	1	
IC481		RC082BM	IC	1	
L1-L8		VLP0017	COIL	8	
L201		VLQEL05S101J	COIL 100UH	1	
L202		VLQEL05S221J	COIL 220UH	1	
L203		VLQEL05S680J	COIL 68UH	1	
L204		VLQEL05S221J	COIL 220UH	1	
L205		VLQEL05S470J	COIL 47UH	1	
L404		VLQ0211M1R8	COIL 1.8UH	1	
Q201		UN2212	TRANSISTOR-RESISTOR	1	
Q202		2SB709	TRANSISTOR CHIP	1	(Q,R)
Q203,04		2SK606	TRANSISTOR	2	
Q402,03		2SD601	TRANSISTOR CHIP	2	(Q,R)
Q404-06		2SB709	TRANSISTOR CHIP	3	(Q,R)
Q408		2SB709	TRANSISTOR CHIP	1	(Q,R)
			RESISTORS		
R1		ERJ6GEYJ101	M.RESISTOR CH 1/10W 100	1	
R2		ERJ6GEYG472	M.RESISTOR CH1/10W 4.7K	1	
R3,R4		ERJ6GEYG103	M.RESISTOR CH 1/10W 10K	2	
R5		ERJ6GEYG270	M.RESISTOR CH 1/10W 27	1	
R6,R7		ERJ6GEYJ393	M.RESISTOR CH 1/10W 39K	2	
R11,12		ERJ6GEYJ272	M.RESISTOR CH 1/10W 2.7K	2	
R13		ERJ6GEYG270	M.RESISTOR CH 1/10W 27	1	
R14		ERJ6GEYG103	M.RESISTOR CH 1/10W 10K	1	
R16		ERJ6GEY0R00	M.RESISTOR CH 1/10W 0	1	
R18		ERJ6GEY0R00	M.RESISTOR CH 1/10W 0	1	
R19,20		ERJ6GEYJ272	M.RESISTOR CH 1/10W 2.7K	2	
R21		ERJ6GEY0R00	M.RESISTOR CH 1/10W 0	1	
R22		ERJ6GEYG270	M.RESISTOR CH 1/10W 27	1	
R23		ERJ6GEY0R00	M.RESISTOR CH 1/10W 0	1	
R25		ERJ6GEY0R00	M.RESISTOR CH 1/10W 0	1	
R28,29		ERJ6GEYG103	M.RESISTOR CH 1/10W 10K	2	
R30		ERJ6GEYG182	M.RESISTOR CH 1/10W 1.8K	1	
R31		ERJ6GEYG103	M.RESISTOR CH 1/10W 10K	1	
R34,35		ERJ6GEYJ101	M.RESISTOR CH 1/10W 100	2	
R36-40		ERJ6GEYJ393	M.RESISTOR CH 1/10W 39K	5	
R42,43		ERJ6GEYJ105	M.RESISTOR CH 1/10W 1M	2	
R45		ERJ6GEY0R00	M.RESISTOR CH 1/10W 0	1	
R47-50		ERJ6GEYJ393	M.RESISTOR CH 1/10W 39K	4	
R51,52		ERJ6GEYG472	M.RESISTOR CH1/10W 4.7K	2	
R53		ERJ6GEYG223	M.RESISTOR CH 1/10W 22K	1	
R55		ERJ6GEYG682	M.REISITOR CH 1/10W 6.8K	1	
R57		ERJ6GEYG682	M.REISITOR CH 1/10W 6.8K	1	
R58		ERJ6GEY0R00	M.RESISTOR CH 1/10W 0	1	
R60		ERJ6GEYG152	M.RESISTOR CH 1/10W 1.5K	1	
R61		ERJ6GEYG102	M.RESISTOR CH 1/10W 1K	1	
R62		ERJ6GEYG182	M.RESISTOR CH 1/10W 1.8K	1	
R63		ERJ6GEYG472	M.RESISTOR CH1/10W 4.7K	1	
R64		ERJ6GEYG152	M.RESISTOR CH 1/10W 1.5K	1	
R65		ERJ6GEYG472	M.RESISTOR CH1/10W 4.7K	1	
R66		ERJ6GEYG102	M.RESISTOR CH 1/10W 1K	1	
R67		ERJ6GEYG152	M.RESISTOR CH 1/10W 1.5K	1	
R68		ERJ6GEYG472	M.RESISTOR CH1/10W 4.7K	1	
R69		ERJ6GEYG102	M.RESISTOR CH 1/10W 1K	1	
R70		ERJ6GEYJ393	M.RESISTOR CH 1/10W 39K	1	
R201		ERJ6GEYJ224	M.RESISTOR CH 1/10W 220K	1	

Ref.No.		Part No.	Part Name & Description	Pcs	Remarks
R202		ERJ6GEYJ684	M.RESISTOR CH 1/10W 680K	1	
R203		ERJ6GEYJ103	M.RESISTOR CH 1/10W 10K	1	
R204,05		ERJ6GEYJ822	M.RESISTOR CH 1/10W 8.2K	2	
R206-10		ERJ6GEYJ222	M.RESISTOR CH 1/10W 2.2K	5	
R211		ERJ6GEYJ683	M.RESISTOR CH 1/10W 68K	1	
R212		ERJ6GEYJ222	M.RESISTOR CH 1/10W 2.2K	1	
R213,14		ERJ6GEYJ103	M.RESISTOR CH 1/10W 10K	2	
R215		ERJ6GEYJ333	M.RESISTOR CH 1/10W 33K	1	
R216		ERJ6GEYJ682	M.RESISTOR CH 1/10W 6.8K	1	
R217		ERJ6GEYJ103	M.RESISTOR CH 1/10W 10K	1	
R218		ERJ6GEYJ563	M.RESISTOR CH 1/10W 56K	1	
R219		ERJ6GEYJ681	M.RESISTOR CH 1/10W 680	1	
R220		ERJ6GEYJ184	M.RESISTOR CH1/10W 180K	1	
R221		ERJ6GEYJ392	M.RESISTOR CH 1/10W 3.9K	1	
R222,23		ERJ6GEYJ102	M.RESISTOR CH 1/10W 1K	2	
R224		ERJ6GEYJ222	M.RESISTOR CH 1/10W 2.2K	1	
R225		ERJ6GEYJ152	M.RESISTOR CH 1/10W 1.5K	1	
R226		ERJ6GEYJ333	M.RESISTOR CH 1/10W 33K	1	
R227		ERJ6GEYJ273	M.RESISTOR CH1/10W 27K	1	
R228		ERJ6GEYJ223	M.RESISTOR CH 1/10W 22K	1	
R229		ERJ6GEYJ105	M.RESISTOR CH 1/10W 1M	1	
R230		ERJ6GEYJ102	M.RESISTOR CH 1/10W 1K	1	
R231		ERJ6GEYJ473	M.RESISTOR CH 1/10W 47K	1	
R232		ERJ6GEYJ123	M.RESISTOR CH1/10W 12K	1	
R233		ERJ6GEYJ103	M.RESISTOR CH 1/10W 10K	1	
R234,35		ERJ6GEYJ473	M.RESISTOR CH 1/10W 47K	2	
R236,37		ERJ6GEYJ332	M.RESISTOR CH 1/10W 3.3K	2	
R238,39		ERJ6GEYJ102	M.RESISTOR CH 1/10W 1K	2	
R240		ERJ6GEYJ103	M.RESISTOR CH 1/10W 10K	1	
R241		ERJ6GEYJ221	M.RESISTOR CH 1/10W 220	1	
R247		ERJ6GEYJ332	M.RESISTOR CH 1/10W 3.3K	1	
R248		ERJ6GEYJ822	M.RESISTOR CH 1/10W 8.2K	1	
R249		ERJ6GEYJ821	M.RESISTOR CH 1/10W 820	1	
R250		ERJ6GEYJ152	M.RESISTOR CH 1/10W 1.5K	1	
R251-60		ERJ6GEYJ393	M.RESISTOR CH 1/10W 39K	10	
R261		ERJ6GEYJ473	M.RESISTOR CH 1/10W 47K	1	
R262-64		ERJ6GEYJ223	M.RESISTOR CH 1/10W 22K	3	
R265		ERJ6GEYJ104	M.RESISTOR CH 1/10W 100K	1	
R266		ERJ6GEYJ122	M.RESISTOR CH1/10W 1.2K	1	
R267		ERJ6GEYJ823	M.RESISTOR CH 1/10W 82K	1	
R268		ERJ6GEYJ123	M.RESISTOR CH1/10W 12K	1	
R269		ERJ6GEYJ153	M.RESISTOR CH 1/10W 15K	1	
R270		ERJ6GEYJ223	M.RESISTOR CH 1/10W 22K	1	
R272		ERJ6GEYJ473	M.RESISTOR CH 1/10W 47K	1	
R273		ERJ6GEYJ105	M.RESISTOR CH 1/10W 1M	1	
R274		ERJ6GEYJ104	M.RESISTOR CH 1/10W 100K	1	
R275		ERJ6GEYJ682	M.RESISTOR CH 1/10W 6.8K	1	
R276		ERJ6GEYJ103	M.RESISTOR CH 1/10W 10K	1	
R277		ERJ6GEYJ333	M.RESISTOR CH 1/10W 33K	1	
R278		ERJ6GEYJ823	M.RESISTOR CH 1/10W 82K	1	
R279		ERJ6GEYJ822	M.RESISTOR CH 1/10W 8.2K	1	
R280		ERJ6GEYJ682	M.RESISTOR CH 1/10W 6.8K	1	
R281		ERJ6GEY0R00	M.RESISTOR CH 1/10W 0	1	
R282		ERJ6GEYJ471	M.RESISTOR CH 1/10W 470	1	
R283		ERJ6GEYJ473	M.RESISTOR CH 1/10W 47K	1	
R286		ERJ6GEYJ183	M.RESISTOR CH 1/10W 18K	1	
R287		ERJ6GEYJ153	M.RESISTOR CH 1/10W 15K	1	
R288		ERJ6GEYJ105	M.RESISTOR CH 1/10W 1M	1	
R289		ERJ6GEYJ223	M.RESISTOR CH 1/10W 22K	1	
R290		ERJ6GEYJ102	M.RESISTOR CH 1/10W 1K	1	
R291		ERJ6GEYJ471	M.RESISTOR CH 1/10W 470	1	
R292		ERJ6GEYJ473	M.RESISTOR CH 1/10W 47K	1	
R293		ERJ6GEYJ822	M.RESISTOR CH 1/10W 8.2K	1	
R294		ERJ6GEYJ103	M.RESISTOR CH 1/10W 10K	1	
R295		ERJ6GEYJ105	M.RESISTOR CH 1/10W 1M	1	
R296		ERJ6GEYJ223	M.RESISTOR CH 1/10W 22K	1	
R297		ERJ6GEYJ102	M.RESISTOR CH 1/10W 1K	1	
R298-00		ERJ6GEYJ223	M.RESISTOR CH 1/10W 22K	3	
R301		ERJ6GEYJ101	M.RESISTOR CH 1/10W 100	1	
R352		ERJ6GEY0R00	M.RESISTOR CH 1/10W 0	1	
R354		ERJ6GEY0R00	M.RESISTOR CH 1/10W 0	1	
R357,58		ERJ6GEY0R00	M.RESISTOR CH 1/10W 0	2	
R361		ERJ6GEY0R00	M.RESISTOR CH 1/10W 0	1	
R366-68		ERJ6GEY0R00	M.RESISTOR CH 1/10W 0	3	
R375		ERJ6GEY0R00	M.RESISTOR CH 1/10W 0	1	

Refer to the P.C.BOARDS LIST, page 6-1-1, before using this page.

Ref.No.		Part No.	Part Name & Description	Pcs	Remarks
R379		ERJ6GEY0R00	M.RESISTOR CH 1/10W 0	1	
R401		ERJ6GEYJ103	M.RESISTOR CH 1/10W 10K	1	
R402		ERJ6GEYJ102	M.RESISTOR CH 1/10W 1K	1	
R403		ERJ6GEYJ393	M.RESISTOR CH 1/10W 39K	1	
R404		ERJ6GEYJ472	M.RESISTOR CH 1/10W 4.7K	1	
R405		ERJ6GEYJ562	M.RESISTOR CH 1/10W 5.6K	1	
R406		ERJ6GEYJ103	M.RESISTOR CH 1/10W 10K	1	
R407		ERDS2TJ334	C.RESISTOR 1/4W 330K	1	
R408		ERJ6GEYJ183	M.RESISTOR CH 1/10W 18K	1	
R409		ERJ6GEYJ681	M.RESISTOR CH 1/10W 680	1	
R410		ERJ6GEYJ682	M.RESISTOR CH 1/10W 6.8K	1	
R411-17		ERJ6GEYJ393	M.RESISTOR CH 1/10W 39K	7	
R418,19		ERJ6GEYJ101	M.RESISTOR CH 1/10W 100	2	
R420		ERJ6GEYJ103	M.RESISTOR CH 1/10W 10K	1	
R421,22		ERJ6GEYJ392	M.RESISTOR CH 1/10W 3.9K	2	
R423		ERJ6GEYJ562	M.RESISTOR CH 1/10W 5.6K	1	
R424		ERJ6GEYJ272	M.RESISTOR CH 1/10W 2.7K	1	
R425		ERJ6GEYJ562	M.RESISTOR CH 1/10W 5.6K	1	
R426		ERJ6GEYJ392	M.RESISTOR CH 1/10W 3.9K	1	
R427		ERJ6GEYJ272	M.RESISTOR CH 1/10W 2.7K	1	
R428		ERJ6GEYJ563	M.RESISTOR CH 1/10W 56K	1	
R429		ERJ6GEYJ562	M.RESISTOR CH 1/10W 5.6K	1	
R430		ERJ6GEYJ103	M.RESISTOR CH 1/10W 10K	1	
R431		ERJ6GEYJ183	M.RESISTOR CH 1/10W 18K	1	
R432		ERJ6GEYJ681	M.RESISTOR CH 1/10W 680	1	
R433		ERJ6GEYJ393	M.RESISTOR CH 1/10W 39K	1	
R434		ERJ6GEYJ471	M.RESISTOR CH 1/10W 470	1	
R435		ERJ6GEYJ273	M.RESISTOR CH1/10W 27K	1	
R436		ERJ6GEYJ823	M.RESISTOR CH 1/10W 82K	1	
R439-41		ERJ6GEY0R00	M.RESISTOR CH 1/10W 0	3	
R443		ERJ6GEY0R00	M.RESISTOR CH 1/10W 0	1	
R445		ERJ6GEYJ152	M.RESISTOR CH 1/10W 1.5K	1	
R446		ERJ6GEYJ392	M.RESISTOR CH 1/10W 3.9K	1	
R447		ERJ6GEYJ562	M.RESISTOR CH 1/10W 5.6K	1	
R448		ERJ6GEY0R00	M.RESISTOR CH 1/10W 0	1	
R450		ERJ6GEYJ393	M.RESISTOR CH 1/10W 39K	1	
R451		ERJ6GEYJ471	M.RESISTOR CH 1/10W 470	1	
R452		ERJ6GEYJ682	M.RESISTOR CH 1/10W 6.8K	1	
R453		ERJ6GEYJ183	M.RESISTOR CH 1/10W 18K	1	
R454,55		ERJ6GEY0R00	M.RESISTOR CH 1/10W 0	2	
R456		ERJ6GEYJ563	M.RESISTOR CH 1/10W 56K	1	
R457		ERJ6GEYJ472	M.RESISTOR CH 1/10W 4.7K	1	
R461		ERJ6GEYJ273	M.RESISTOR CH1/10W 27K	1	
R462		ERJ6GEYJ101	M.RESISTOR CH 1/10W 100	1	
R464		ERJ6GEYJ562	M.RESISTOR CH 1/10W 5.6K	1	
R465		ERJ6GEYJ183	M.RESISTOR CH 1/10W 18K	1	
R466,67		ERJ6GEYJ182	M.RESISTOR CH 1/10W 1.8K	2	
R468		ERJ6GEYJ153	M.RESISTOR CH 1/10W 15K	1	
R469		ERJ6GEYJ681	M.RESISTOR CH 1/10W 680	1	
R470		ERJ6GEYJ123	M.RESISTOR CH1/10W 12K	1	
R471		ERJ6GEYJ821	M.RESISTOR CH 1/10W 820	1	
R472		ERJ6GEYJ153	M.RESISTOR CH 1/10W 15K	1	
R473		ERJ6GEYJ182	M.RESISTOR CH 1/10W 1.8K	1	
R474		ERJ6GEYJ153	M.RESISTOR CH 1/10W 15K	1	
R475,76		ERJ6GEYJ332	M.RESISTOR CH 1/10W 3.3K	2	
R477		ERJ6GEYJ222	M.RESISTOR CH 1/10W 2.2K	1	
R478		ERJ6GEYJ562	M.RESISTOR CH 1/10W 5.6K	1	
R480		ERJ6GEYJ273	M.RESISTOR CH1/10W 27K	1	
R481		ERJ6GEYJ153	M.RESISTOR CH 1/10W 15K	1	
R482		ERJ6GEYJ682	M.RESISTOR CH 1/10W 6.8K	1	
R483		ERJ6GEYJ152	M.RESISTOR CH 1/10W 1.5K	1	
R484,85		ERJ6GEYJ102	M.RESISTOR CH 1/10W 1K	2	
R486,87		ERJ6GEYJ103	M.RESISTOR CH 1/10W 10K	2	
R488		ERJ6GEYJ123	M.RESISTOR CH1/10W 12K	1	
R489		ERJ6GEYJ183	M.RESISTOR CH 1/10W 18K	1	
R491		ERJ6GEY0R00	M.RESISTOR CH 1/10W 0	1	
R494		ERJ6GEY0R00	M.RESISTOR CH 1/10W 0	1	
R497		ERJ6GEY0R00	M.RESISTOR CH 1/10W 0	1	
R498		ERJ6GEYJ562	M.RESISTOR CH 1/10W 5.6K	1	
R499		ERJ6GEYJ472	M.RESISTOR CH 1/10W 4.7K	1	
R502		ERJ6GEYJ152	M.RESISTOR CH 1/10W 1.5K	1	
R503,04		ERJ6GEYJ102	M.RESISTOR CH 1/10W 1K	2	
R524		ERJ6GEYJ152	M.RESISTOR CH 1/10W 1.5K	1	
R525		ERJ6GEYJ101	M.RESISTOR CH 1/10W 100	1	
R529		ERJ6GEY0R00	M.RESISTOR CH 1/10W 0	1	

Ref.No.		Part No.	Part Name & Description	Pcs	Remarks
R530		ERJ6GEYJ102	M.RESISTOR CH 1/10W 1K	1	
R531		ERJ6GEYJ101	M.RESISTOR CH 1/10W 100	1	
R532		ERJ6GEY0R00	M.RESISTOR CH 1/10W 0	1	
R569		ERJ6GEYJ562	M.RESISTOR CH 1/10W 5.6K	1	
RA1,A2		EXBF9E332J	COMBI.R-R 33K	2	
RA4-A9		EXBF9E332J	COMBI.R-R 33K	6	
RA10-18		EXBF9E332J	COMBI.R-R 33K	9	
SW7		VSS0126	SWITCH	1	
SW201		VSS0126	SWITCH	1	
SW203		VSR0045	SWITCH	1	
TP1,P2		VJR0582	PACK PIN	2	
TP201-08		VJR0582	PACK PIN	8	
TP210-15		VJR0582	PACK PIN	6	
TP412,13		VJR0582	PACK PIN	2	
TP416,17		VJR0582	PACK PIN	2	
TP422-27		VJR0582	PACK PIN	6	
TPG201		VJR0582	PACK PIN	1	
TPG401,02		VJR0582	PACK PIN	2	
VR1		VRV0109B103	V.RESISTOR 10K	1	
VR2		VRV0109B202	V.RESISTOR 2K	1	
VR201		VRV0109B203	V.RESISTOR 20K	1	
VR202		VRV0109B103	V.RESISTOR 10K	1	
VR203		VRV0064B202	V.RESISTOR 2K	1	
VR204		VRV0064B502	V.RESISTOR 5K	1	
VR205		VRV0109B502	V.RESISTOR 5K	1	
VR207		VRV0064B502	V.RESISTOR 5K	1	
VR401,02		VRV0109B502	V.RESISTOR 5K	2	
VR403		VRV0109B202	V.RESISTOR 2K	1	
VR405,06		VRV0064B502	V.RESISTOR 5K	2	
VR408		VRV0109B202	V.RESISTOR 2K	1	
VR409		VRV0109B502	V.RESISTOR 5K	1	
X201		VSX0081	CRYSTAL OSCILLATOR	1	
X202		VSX0338	CRYSTAL OSCILLATOR	1	
X203,04		VSX0280	CRYSTAL OSCILLATOR	2	
X501		VSX0211	CRYSTAL OSCILLATOR	1	
			MISCELLANEOUS		
		VML2143	CARD PULLER	1	
		VML2144	CARD PULLER	1	
		VMS4174	PIN	6	
		VMZ1547	BARRIER	1	
		VSC3056	SHIELD CASE	1	
		VXA3966	P.C.B. SHIELD PLATE	1	
		XNG26E	NUT	4	
		XWGV25D5G	NUT	4	
		XYNV3+K6FR	SCREW	6	
		XYN26+C12	SCREW	4	

Refer to the P.C.BOARDS LIST, page 6-1-1, before using this page.

Ref.No.		Part No.	Part Name & Description	Pcs	Remarks
	■	VEP88062C	P.C.BOARD W/COMPONENT		
			W1 TBC & SYNCGEN		
			CAPACITORS		
C1		ECUM1E104ZFN	C.CAPACITOR CH 25V 0.1U	1	
C2		ECEA0JU101	E.CAPACITOR 6.3V 100U	1	
C3		ECUM1E104ZFN	C.CAPACITOR CH 25V 0.1U	1	
C4		ECEA0JU101	E.CAPACITOR 6.3V 100U	1	
C5		ECUM1E104ZFN	C.CAPACITOR CH 25V 0.1U	1	
C6		ECEA1CU101	E.CAPACITOR 16V 100U	1	
C7		ECUM1E104ZFN	C.CAPACITOR CH 25V 0.1U	1	
C8		ECEA1CU101	E.CAPACITOR 16V 100U	1	
C9		ECUM1E104ZFN	C.CAPACITOR CH 25V 0.1U	1	
C10		ECEA1AU101	E.CAPACITOR 10V 100U	1	
C11		ECUM1E104ZFN	C.CAPACITOR CH 25V 0.1U	1	
C12		ECEA1CU101	E.CAPACITOR 16V 100U	1	
C13		ECUM1E104ZFN	C.CAPACITOR CH 25V 0.1U	1	
C14		ECEA1AU101	E.CAPACITOR 10V 100U	1	
C15,16		ECUM1E104ZFN	C.CAPACITOR CH 25V 0.1U	2	
C17		ECUM1C104KBN	C.CAPACITOR CH 16V 0.1U	1	
C18-22		ECUM1E104ZFN	C.CAPACITOR CH 25V 0.1U	5	
C23		ECEA1CU220	E.CAPACITOR 16V 22U	1	
C24		ECUM1E104ZFN	C.CAPACITOR CH 25V 0.1U	1	
C25		ECEA1HU2R2	E.CAPACITOR 50V 2.2U	1	
C26		ECEA1CU220	E.CAPACITOR 16V 22U	1	
C27		ECUM1E104ZFN	C.CAPACITOR CH 25V 0.1U	1	
C28		ECEA1CU220	E.CAPACITOR 16V 22U	1	
C29-33		ECUM1E104ZFN	C.CAPACITOR CH 25V 0.1U	5	
C34		ECEA1HU2R2	E.CAPACITOR 50V 2.2U	1	
C35		ECEA1CU220	E.CAPACITOR 16V 22U	1	
C36		ECUM1E104ZFN	C.CAPACITOR CH 25V 0.1U	1	
C37		ECEA1AU221	E.CAPACITOR 10V 220U	1	
C38		ECEA1HU2R2	E.CAPACITOR 50V 2.2U	1	
C39		ECUM1E104ZFN	C.CAPACITOR CH 25V 0.1U	1	
C40		ECEA0JU101	E.CAPACITOR 6.3V 100U	1	
C41-48		ECUM1C104KBN	C.CAPACITOR CH 16V 0.1U	8	
C49-52		ECUM1E104ZFN	C.CAPACITOR CH 25V 0.1U	4	
C53		ECUM1C104KBN	C.CAPACITOR CH 16V 0.1U	1	
C57,58		ECUM1H101JCN	C.CAPACITOR CH 50V 100P	2	
C59,60		ECUM1C104KBN	C.CAPACITOR CH 16V 0.1U	2	
C61-64		ECUM1E104ZFN	C.CAPACITOR CH 25V 0.1U	4	
C65		ECUM1C104KBN	C.CAPACITOR CH 16V 0.1U	1	
C66		ECUM1E104ZFN	C.CAPACITOR CH 25V 0.1U	1	
C67-73		ECUM1C104KBN	C.CAPACITOR CH 16V 0.1U	7	
C74-78		ECUM1E104ZFN	C.CAPACITOR CH 25V 0.1U	5	
C79		ECEA1CU220	E.CAPACITOR 16V 22U	1	
C81		ECQV1H474JZ	P.CAPACITOR 50V 0.47U	1	
C201		ECEA1AU470	E.CAPACITOR 10V 47U	1	
C202,03		ECUM1H103KBN	C.CAPACITOR CH 50V 0.01U	2	
C204		ECUM1H181JCN	C.CAPACITOR CH 50V 180P	1	
C205		ECUM1H103KBN	C.CAPACITOR CH 50V 0.01U	1	
C206		ECUM1H180JCN	C.CAPACITOR CH 50V 18P	1	
C207		ECUM1H680JCN	C.CAPACITOR CH 50V 68P	1	
C208,09		ECUM1C104KBN	C.CAPACITOR CH 16V 0.1U	2	
C210		ECEA1HN010S	E.CAPACITOR 50V 1U	1	
C211		ECUM1E104ZFN	C.CAPACITOR CH 25V 0.1U	1	
C212		ECEA1CU470	E.CAPACITOR 16V 47U	1	
C213		ECUM1H330JCN	C.CAPACITOR CH 50V 33P	1	
C214		ECUM1H101JCN	C.CAPACITOR CH 50V 100P	1	
C215		ECUM1H181JCN	C.CAPACITOR CH 50V 180P	1	
C216		ECUM1H101JCN	C.CAPACITOR CH 50V 100P	1	
C217		ECUM1H220JCN	C.CAPACITOR CH 50V 22P	1	
C218		ECUM1H470JCN	C.CAPACITOR CH 50V 47P	1	
C219-22		ECUM1E104ZFN	C.CAPACITOR CH 25V 0.1U	4	
C225		ECUM1H820JCN	C.CAPACITOR CH 50V 82P	1	
C226		ECEA1CU100	E.CAPACITOR 16V 10U	1	
C227		ECEA1CU470	E.CAPACITOR 16V 47U	1	
C228		ECUM1E104ZFN	C.CAPACITOR CH 25V 0.1U	1	
C229		ECUM1H103KBN	C.CAPACITOR CH 50V 0.01U	1	
C230		ECUM1E104ZFN	C.CAPACITOR CH 25V 0.1U	1	
C231		ECEA1HN2R2S	E.CAPACITOR 50V 2.2U	1	
C232		ECUM1E104ZFN	C.CAPACITOR CH 25V 0.1U	1	
C233		ECUM1H270JCN	C.CAPACITOR CH 50V 27P	1	
C234		ECV1ZW20X53T	V.CAPACITOR 20P	1	
C235		ECUM1H102JCN	C.CAPACITOR CH 50V 1000P	1	
C236		ECUM1E104ZFN	C.CAPACITOR CH 25V 0.1U	1	
C237		ECEA1CU100	E.CAPACITOR 16V 10U	1	
C238		ECUM1H150JCN	C.CAPACITOR CH 50V 15P	1	
C239		ECUM1H220JCN	C.CAPACITOR CH 50V 22P	1	
C240		ECUM1H103KBN	C.CAPACITOR CH 50V 0.01U	1	
C241,42		ECUM1E104ZFN	C.CAPACITOR CH 25V 0.1U	2	
C243		ECUM1C104KBN	C.CAPACITOR CH 16V 0.1U	1	
C244-46		ECUM1E104ZFN	C.CAPACITOR CH 25V 0.1U	3	
C247		ECUM1H390JCN	C.CAPACITOR CH 50V 39P	1	
C248		ECUM1E104ZFN	C.CAPACITOR CH 25V 0.1U	1	
C250		ECEA1CU470	E.CAPACITOR 16V 47U	1	
C251		ECEA1AU470	E.CAPACITOR 10V 47U	1	
C252		ECUM1E104ZFN	C.CAPACITOR CH 25V 0.1U	1	
C253		ECEA1CU100	E.CAPACITOR 16V 10U	1	
C254,55		ECUM1E104ZFN	C.CAPACITOR CH 25V 0.1U	2	
C256		ECUM1H103KBN	C.CAPACITOR CH 50V 0.01U	1	
C257		ECUM1E104ZFN	C.CAPACITOR CH 25V 0.1U	1	
C258		ECEA1HN010S	E.CAPACITOR 50V 1U	1	
C259		ECUM1E104ZFN	C.CAPACITOR CH 25V 0.1U	1	
C260		ECEA1AU470	E.CAPACITOR 10V 47U	1	
C261		ECUM1E104ZFN	C.CAPACITOR CH 25V 0.1U	1	
C262		ECEA1AU470	E.CAPACITOR 10V 47U	1	
C263		ECUM1E104ZFN	C.CAPACITOR CH 25V 0.1U	1	
C264		ECEA1CN100S	E.CAPACITOR 16V 10U	1	
C265		ECUM1H102JCN	C.CAPACITOR CH 50V 1000P	1	
C266		ECUM1H150JCN	C.CAPACITOR CH 50V 15P	1	
C267,68		ECUM1E104ZFN	C.CAPACITOR CH 25V 0.1U	2	
C270		ECUM1H103KBN	C.CAPACITOR CH 50V 0.01U	1	
C271-73		ECUM1E104ZFN	C.CAPACITOR CH 25V 0.1U	3	
C274		ECUM1C104KBN	C.CAPACITOR CH 16V 0.1U	1	
C275		ECUM1H102JCN	C.CAPACITOR CH 50V 1000P	1	
C276		ECUM1H104ZFN	C.CAPACITOR CH 50V 0.1U	1	
C277		ECEA1AU470	E.CAPACITOR 10V 47U	1	
C279		ECUM1H103KBN	C.CAPACITOR CH 50V 0.01U	1	
C280,81		ECUM1E104ZFN	C.CAPACITOR CH 25V 0.1U	2	
C282		ECUM1C104KBN	C.CAPACITOR CH 16V 0.1U	1	
C283		ECUM1H102JCN	C.CAPACITOR CH 50V 1000P	1	
C284		ECUM1E104ZFN	C.CAPACITOR CH 25V 0.1U	1	
C286-91		ECUM1E104ZFN	C.CAPACITOR CH 25V 0.1U	6	
C401		ECQM1H222JF	P.CAPACITOR 50V 2200P	1	
C402		ECQM1H223JF	P.CAPACITOR 50V 0.022U	1	
C403		ECQM1H222JF	P.CAPACITOR 50V 2200P	1	
C406		ECQM1H102JF	P.CAPACITOR 50V 1000P	1	
C407,08		ECCF1H221JC	C.CAPACITOR 50V 220P	2	
C409		ECUM1E104ZFN	C.CAPACITOR CH 25V 0.1U	1	
C410,11		ECUM1H820JCN	C.CAPACITOR CH 50V 82P	2	
C412		ECUM1E104ZFN	C.CAPACITOR CH 25V 0.1U	1	
C413		ECUM1H820JCN	C.CAPACITOR CH 50V 82P	1	
C414-18		ECUM1E104ZFN	C.CAPACITOR CH 25V 0.1U	5	
C423		ECUM1H391JCN	C.CAPACITOR CH 50V 390P	1	
C424		ECUM1E104ZFN	C.CAPACITOR CH 25V 0.1U	1	
C425		ECQM1H102JF	P.CAPACITOR 50V 1000P	1	
C426		ECUM1H221JCN	C.CAPACITOR CH 50V 220P	1	
C427		ECQM1H102JF	P.CAPACITOR 50V 1000P	1	
C438		ECUM1H681JCN	C.CAPACITOR CH 50V 680P	1	
C441		ECQM1H102JF	P.CAPACITOR 50V 1000P	1	
C442		ECUM1H221JCN	C.CAPACITOR CH 50V 220P	1	
C443,44		ECUM1E104ZFN	C.CAPACITOR CH 25V 0.1U	2	
C450		ECQM1H103JF	P.CAPACITOR 50V 0.01U	1	
C452		ECUM1H151JCN	C.CAPACITOR CH 50V 150P	1	
C453		ECQM1H223JF	P.CAPACITOR 50V 0.022U	1	
C454		ECQM1H122JF	P.CAPACITOR 50V 1200P	1	
C455		ECQM1H104JF	P.CAPACITOR 50V 0.1U	1	
C456		ECEA1CN100S	E.CAPACITOR 16V 10U	1	
C457		ECUM1H561JCN	C.CAPACITOR CH 50V 560P	1	
C458		ECUM1E104ZFN	C.CAPACITOR CH 25V 0.1U	1	
C459		ECEA1AU220	E.CAPACITOR 10V 22U	1	
C460,61		ECUM1H101JCN	C.CAPACITOR CH 50V 100P	2	

Refer to the P.C.BOARDS LIST, page 6-1-1, before using this page.

Ref.No.		Part No.	Part Name & Description	Pcs	Remarks
C462		ECUM1E104ZFN	C.CAPACITOR CH 25V 0.1U	1	
C463		ECEA1AU220	E.CAPACITOR 10V 22U	1	
C464		ECUM1H103ZFN	C.CAPACITOR CH 50V 0.01U	1	
C465		ECUM1H560JCN	C.CAPACITOR CH 50V 56P	1	
C467		ECUM1E104ZFN	C.CAPACITOR CH 25V 0.1U	1	
C468		ECEA1AU220	E.CAPACITOR 10V 22U	1	
C469,70		ECUM1E104ZFN	C.CAPACITOR CH 25V 0.1U	2	
C471		ECUM1H151JCN	C.CAPACITOR CH 50V 150P	1	
C473		ECUM1E104ZFN	C.CAPACITOR CH 25V 0.1U	1	
C474		ECEA1AU101	E.CAPACITOR 10V 100U	1	
C475		ECUM1E104ZFN	C.CAPACITOR CH 25V 0.1U	1	
C476		ECEA1CU101	E.CAPACITOR 16V 100U	1	
C477		ECUM1E104ZFN	C.CAPACITOR CH 25V 0.1U	1	
C478		ECEA1CU101	E.CAPACITOR 16V 100U	1	
C479		ECQM1H103JF	P.CAPACITOR 50V 0.01U	1	
C480		ECUM1H470JCN	C.CAPACITOR CH 50V 47P	1	
C481		ECUM1H181JCN	C.CAPACITOR CH 50V 180P	1	
C482		ECQM1H122JF	P.CAPACITOR 50V 1200P	1	
C483		ECQM1H103JF	P.CAPACITOR 50V 0.01U	1	
C484		ECUM1E104ZFN	C.CAPACITOR CH 25V 0.1U	1	
C485		ECEA1AU220	E.CAPACITOR 10V 22U	1	
C486		ECUM1E104ZFN	C.CAPACITOR CH 25V 0.1U	1	
C487		ECEA1HUR47	E.CAPACITOR 50V 0.47U	1	
C488		ECEA1HN010S	E.CAPACITOR 50V 1U	1	
C489		ECEA1HU2R2	E.CAPACITOR 50V 2.2U	1	
C490		ECUM1H330JCN	C.CAPACITOR CH 50V 33P	1	
C491		ECQM1H223JF	P.CAPACITOR 50V 0.022U	1	
C504		ECUM1H470JCN	C.CAPACITOR CH 50V 47P	1	
C514		ECUM1E104ZFN	C.CAPACITOR CH 25V 0.1U	1	
C517		ECUM1H470JCN	C.CAPACITOR CH 50V 47P	1	
C518-20		ECUM1E104ZFN	C.CAPACITOR CH 25V 0.1U	3	
C521		ECEA1CU101	E.CAPACITOR 16V 100U	1	
C522		ECUM1E104ZFN	C.CAPACITOR CH 25V 0.1U	1	
C523		ECEA1CU101	E.CAPACITOR 16V 100U	1	
C524		ECUM1E104ZFN	C.CAPACITOR CH 25V 0.1U	1	
C525		ECEA1AU101	E.CAPACITOR 10V 100U	1	
C528		ECEA1AU220	E.CAPACITOR 10V 22U	1	
C529		ECUM1E104ZFN	C.CAPACITOR CH 25V 0.1U	1	
C551		ECUM1E104ZFN	C.CAPACITOR CH 25V 0.1U	1	
C600-09		ECUM1E104ZFN	C.CAPACITOR CH 25V 0.1U	10	
C614,15		ECUM1E104ZFN	C.CAPACITOR CH 25V 0.1U	2	
D201		MA151WA	DIODE	1	
D202		MA335-R	DIODE	1	
D203		MA151K	DIODE	1	
D206-10		MA151K	DIODE	5	
D211		MA151WK	DIODE	1	
D212		MA151K	DIODE	1	
D402		MA151K	DIODE	1	
D404		MA153	DIODE	1	
D406		MA151K	DIODE	1	
D407		MA335-R	DIODE	1	
D408-10		MA151K	DIODE	3	
D416,17		MA151K	DIODE	2	
IC1,C2		CY7C128-45PC	IC	2	
IC4,C5		MC74HC574F	IC	2	
IC7		UPD65013F101	IC	1	
IC8		UPD41101C	IC	1	
IC9		MC74HC574F	IC	1	
IC10		MC74HC574F	IC	1	
IC11		MC74HC08AF	IC	1	
IC13,14		CY7C128-45PC	IC	2	
IC15,16		MC74HC574F	IC	2	
IC17		UPD65012F475	IC	1	
IC18,19		MC74HC574F	IC	2	
IC20		M74F02FP	IC	1	
IC21		M74F04FP	IC	1	
IC22		MC74HC574F	IC	1	
IC24		MSM77H021GSK	IC	1	
IC25		MSM71056	IC	1	

Ref.No.		Part No.	Part Name & Description	Pcs	Remarks
IC26		VSI0192	IC	1	
IC27		M74F02FP	IC	1	
IC28-35		MB8464A80LPF	IC	8	
IC36		MC74HC574F	IC	1	
IC37		MSM76H012GSK	IC	1	
IC38-44		MB8464A80LPF	IC	7	
IC45		UPD65013FA44	IC	1	
IC46-48		MB40778PF	IC	3	
IC49		AN78L09	IC	1	
IC50		AN79L09	IC	1	
IC51		AN78N05	IC	1	
IC53		M74F109FP	IC	1	
IC54,55		RC082BM	IC	2	
IC57		RC082BM	IC	1	
IC59		RC082BM	IC	1	
IC201		AN91A12S	IC	1	
IC202		MN53015VZW	IC	1	
IC203		UPD65024F152	IC	1	
IC204		UPD65040F144	IC	1	
IC205		NE521D	IC	1	
IC206,07		MN74HC221S	IC	2	
IC208		MC74HC32AF	IC	1	
IC209		MC14053BF	IC	1	(R)
IC210		RC082BM	IC	1	
IC211		NE521D	IC	1	
IC212		MC74HC04AF	IC	1	
IC213		MC74HC125AF	IC	1	
IC214		MC74HC02AF	IC	1	
IC216,17		UPC4082G	IC	2	
IC218		DN74LS04NS	IC	1	
IC220		MC74HC74AF	IC	1	
IC221,22		RC082BM	IC	2	
IC223		MC74HC04AF	IC	1	
IC224		MC74HC08AF	IC	1	
IC225,26		MC74HC04AF	IC	2	
IC228		AN78L09	IC	1	
IC229		AN79L05	IC	1	
IC230		AN78L09	IC	1	
IC231-33		AN78L05	IC	3	
IC401		MC74HC86F	IC	1	
IC402		SN74LS221NS	IC	1	
IC403		MC74HC00AF	IC	1	
IC404		MC74HC02AF	IC	1	
IC405		UPD65022B264	IC	1	
IC409		MC74HC00AF	IC	1	
IC410		SN75452BPS	IC	1	
IC411		UPC319G2	IC	1	
IC412		MC74HC04AF	IC	1	
IC413		SN74LS123NS	IC	1	
IC415		SN74LS123NS	IC	1	
IC416		UPD65022C252	IC	1	
IC418		SN74LS123NS	IC	1	
IC419		MC74HC4053F	IC	1	
IC420,21		RC082BM	IC	2	
IC422		AN79L05	IC	1	
IC423		AN78L05	IC	1	
IC424		MC1648P	IC	1	
IC425		MC10125L	IC	1	
IC426		M74F86FP	IC	1	
IC427,28		M74F109FP	IC	2	
IC429		SN74LS221NS	IC	1	
IC430		AN79L05	IC	1	
IC431		AN79L09	IC	1	
IC432		AN78L09	IC	1	
IC433		SN74LS123NS	IC	1	
IC434		SN74LS221NS	IC	1	
IC435		RC082BM	IC	1	
IC436		MC74HC4053F	IC	1	
IC437		AN78L05	IC	1	
IC438		UPC358G2	IC	1	
IC439		SN74LS624NS	IC	1	
IC441		MC74HC74AF	IC	1	
IC442		MC74HC125F	IC	1	
IC443		MC74HC00AF	IC	1	
IC444		RC082BM	IC	1	

Refer to the P.C.BOARDS LIST, page 6-1-1, before using this page.

Ref.No.		Part No.	Part Name & Description	Pcs	Remarks
IC445		NE521D	IC	1	
IC446		MC74HC00AF	IC	1	
IC470		UPD65022F258	IC	1	
IC471		M74F04FP	IC	1	
IC472		SN74LS04NS	IC	1	
IC473		MC74HC164F	IC	1	
IC474		AN79L09	IC	1	
IC475		AN78L09	IC	1	
IC476		AN79L05	IC	1	
IC477		M74F157AF	IC	1	
IC478		MC74HC00AF	IC	1	
IC479		UPD65025B030	IC	1	
IC480		AN78L05	IC	1	
IC481		RC082BM	IC	1	
L1-L8		VLP0017	COIL	8	
L201		VLQEL05S101J	COIL 100UH	1	
L202		VLQEL05S221J	COIL 220UH	1	
L203		VLQEL05S390J	COIL 39UH	1	
L204		VLQEL05S221J	COIL 220UH	1	
L205		VLQEL05S470J	COIL 47UH	1	
L404		VLQ0211M1R8	COIL 1.8UH	1	
Q201		UN2212	TRANSISTOR-RESISTOR	1	
Q202		2SB709	TRANSISTOR CHIP	1	(Q,R)
Q203,04		2SK606	TRANSISTOR	2	
Q402,03		2SD601	TRANSISTOR CHIP	2	(Q,R)
Q404-06		2SB709	TRANSISTOR CHIP	3	(Q,R)
Q408		2SB709	TRANSISTOR CHIP	1	(Q,R)
			RESISTORS		
R1		ERJ6GEYJ101	M.RESISTOR CH 1/10W 100	1	
R2		ERJ6GEYG472	M.RESISTOR CH 1/10W 4.7K	1	
R3,R4		ERJ6GEYG103	M.RESISTOR CH 1/10W 10K	2	
R5		ERJ6GEYG270	M.RESISTOR CH 1/10W 27	1	
R6,R7		ERJ6GEYJ393	M.RESISTOR CH 1/10W 39K	2	
R11,12		ERJ6GEYJ272	M.RESISTOR CH 1/10W 2.7K	2	
R13		ERJ6GEYG270	M.RESISTOR CH 1/10W 27	1	
R14		ERJ6GEYG103	M.RESISTOR CH 1/10W 10K	1	
R16		ERJ6GEY0R00	M.RESISTOR CH 1/10W 0	1	
R18		ERJ6GEY0R00	M.RESISTOR CH 1/10W 0	1	
R19,20		ERJ6GEYJ272	M.RESISTOR CH 1/10W 2.7K	2	
R21		ERJ6GEY0R00	M.RESISTOR CH 1/10W 0	1	
R22		ERJ6GEYG270	M.RESISTOR CH 1/10W 27	1	
R23		ERJ6GEY0R00	M.RESISTOR CH 1/10W 0	1	
R25		ERJ6GEY0R00	M.RESISTOR CH 1/10W 0	1	
R28,29		ERJ6GEYG103	M.RESISTOR CH 1/10W 10K	2	
R30		ERJ6GEYG182	M.RESISTOR CH 1/10W 1.8K	1	
R31		ERJ6GEYG103	M.RESISTOR CH 1/10W 10K	1	
R33		ERJ6GEYJ393	M.RESISTOR CH 1/10W 39K	1	
R34,35		ERJ6GEYJ101	M.RESISTOR CH 1/10W 100	2	
R36-40		ERJ6GEYJ393	M.RESISTOR CH 1/10W 39K	5	
R42,43		ERJ6GEYJ105	M.RESISTOR CH 1/10W 1M	2	
R44,45		ERJ6GEY0R00	M.RESISTOR CH 1/10W 0	2	
R47-50		ERJ6GEYJ393	M.RESISTOR CH 1/10W 39K	4	
R51,52		ERJ6GEYG472	M.RESISTOR CH 1/10W 4.7K	2	
R53		ERJ6GEYG223	M.RESISTOR CH 1/10W 22K	1	
R55		ERJ6GEYG682	M.REISITOR CH 1/10W 6.8K	1	
R57		ERJ6GEYG682	M.REISITOR CH 1/10W 6.8K	1	
R58		ERJ6GEY0R00	M.RESISTOR CH 1/10W 0	1	
R60		ERJ6GEYG152	M.RESISTOR CH 1/10W 1.5K	1	
R61		ERJ6GEYG102	M.RESISTOR CH 1/10W 1K	1	
R62		ERJ6GEYG182	M.RESISTOR CH 1/10W 1.8K	1	
R63		ERJ6GEYG472	M.RESISTOR CH 1/10W 4.7K	1	
R64		ERJ6GEYG152	M.RESISTOR CH 1/10W 1.5K	1	
R65		ERJ6GEYG472	M.RESISTOR CH 1/10W 4.7K	1	
R66		ERJ6GEYG102	M.RESISTOR CH 1/10W 1K	1	
R67		ERJ6GEYG152	M.RESISTOR CH 1/10W 1.5K	1	
R68		ERJ6GEYG472	M.RESISTOR CH 1/10W 4.7K	1	

Ref.No.		Part No.	Part Name & Description	Pcs	Remarks
R69		ERJ6GEYG102	M.RESISTOR CH 1/10W 1K	1	
R70		ERJ6GEYJ393	M.RESISTOR CH 1/10W 39K	1	
R201		ERJ6GEYJ224	M.RESISTOR CH 1/10W 220K	1	
R202		ERJ6GEYJ684	M.RESISTOR CH 1/10W 680K	1	
R203		ERJ6GEYJ103	M.RESISTOR CH 1/10W 10K	1	
R204,05		ERJ6GEYJ822	M.RESISTOR CH 1/10W 8.2K	2	
R206-10		ERJ6GEYJ222	M.RESISTOR CH 1/10W 2.2K	5	
R211		ERJ6GEYJ683	M.RESISTOR CH 1/10W 68K	1	
R212		ERJ6GEYJ222	M.RESISTOR CH 1/10W 2.2K	1	
R213,14		ERJ6GEYJ103	M.RESISTOR CH 1/10W 10K	2	
R215		ERJ6GEYJ333	M.RESISTOR CH 1/10W 33K	1	
R216		ERJ6GEYJ682	M.RESISTOR CH 1/10W 6.8K	1	
R217		ERJ6GEYJ103	M.RESISTOR CH 1/10W 10K	1	
R218		ERJ6GEYJ563	M.RESISTOR CH 1/10W 56K	1	
R219		ERJ6GEYJ681	M.RESISTOR CH 1/10W 680	1	
R220		ERJ6GEYJ184	M.RESISTOR CH 1/10W 180K	1	
R221		ERJ6GEYJ392	M.RESISTOR CH 1/10W 3.9K	1	
R222,23		ERJ6GEYJ102	M.RESISTOR CH 1/10W 1K	2	
R224		ERJ6GEYJ222	M.RESISTOR CH 1/10W 2.2K	1	
R225		ERJ6GEYJ102	M.RESISTOR CH 1/10W 1K	1	
R226		ERJ6GEYJ333	M.RESISTOR CH 1/10W 33K	1	
R227		ERJ6GEYJ273	M.RESISTOR CH 1/10W 27K	1	
R228		ERJ6GEYJ223	M.RESISTOR CH 1/10W 22K	1	
R229		ERJ6GEYJ105	M.RESISTOR CH 1/10W 1M	1	
R230		ERJ6GEYJ102	M.RESISTOR CH 1/10W 1K	1	
R231		ERJ6GEYJ473	M.RESISTOR CH 1/10W 47K	1	
R232		ERJ6GEYJ123	M.RESISTOR CH 1/10W 12K	1	
R233		ERJ6GEYJ103	M.RESISTOR CH 1/10W 10K	1	
R234,35		ERJ6GEYJ473	M.RESISTOR CH 1/10W 47K	2	
R236,37		ERJ6GEYJ332	M.RESISTOR CH 1/10W 3.3K	2	
R238		ERJ6GEYJ102	M.RESISTOR CH 1/10W 1K	1	
R239		ERDS2TJ123	C.RESISTOR 1/4W 12K	1	
R240		ERJ6GEYJ103	M.RESISTOR CH 1/10W 10K	1	
R241		ERJ6GEYJ221	M.RESISTOR CH 1/10W 220	1	
R247		ERJ6GEYJ332	M.RESISTOR CH 1/10W 3.3K	1	
R248		ERJ6GEYJ123	M.RESISTOR CH 1/10W 12K	1	
R249		ERJ6GEYJ821	M.RESISTOR CH 1/10W 820	1	
R251-60		ERJ6GEYJ393	M.RESISTOR CH 1/10W 39K	10	
R261		ERJ6GEYJ473	M.RESISTOR CH 1/10W 47K	1	
R262-64		ERJ6GEYJ223	M.RESISTOR CH 1/10W 22K	3	
R265		ERJ6GEYJ104	M.RESISTOR CH 1/10W 100K	1	
R266		ERJ6GEYJ122	M.RESISTOR CH 1/10W 1.2K	1	
R267		ERJ6GEYJ473	M.RESISTOR CH 1/10W 47K	1	
R268		ERJ6GEYJ153	M.RESISTOR CH 1/10W 15K	1	
R269		ERJ6GEYJ103	M.RESISTOR CH 1/10W 10K	1	
R270		ERJ6GEYJ223	M.RESISTOR CH 1/10W 22K	1	
R272		ERJ6GEYJ473	M.RESISTOR CH 1/10W 47K	1	
R273		ERJ6GEYJ105	M.RESISTOR CH 1/10W 1M	1	
R274		ERJ6GEYJ104	M.RESISTOR CH 1/10W 100K	1	
R275		ERJ6GEYJ682	M.RESISTOR CH 1/10W 6.8K	1	
R276		ERJ6GEYJ223	M.RESISTOR CH 1/10W 22K	1	
R277		ERJ6GEYJ153	M.RESISTOR CH 1/10W 15K	1	
R278		ERJ6GEYJ273	M.RESISTOR CH 1/10W 27K	1	
R279		ERJ6GEYJ332	M.RESISTOR CH 1/10W 3.3K	1	
R280		ERJ6GEYJ682	M.RESISTOR CH 1/10W 6.8K	1	
R281		ERJ6GEY0R00	M.RESISTOR CH 1/10W 0	1	
R282		ERJ6GEYJ471	M.RESISTOR CH 1/10W 470	1	
R283		ERJ6GEYJ103	M.RESISTOR CH 1/10W 10K	1	
R283		ERJ6GEYJ473	M.RESISTOR CH 1/10W 47K	1	
R284		ERJ6GEYJ822	M.RESISTOR CH 1/10W 8.2K	1	
R285		ERJ6GEYJ103	M.RESISTOR CH 1/10W 10K	1	
R288		ERJ6GEYJ105	M.RESISTOR CH 1/10W 1M	1	
R289		ERJ6GEYJ223	M.RESISTOR CH 1/10W 22K	1	
R290		ERJ6GEYJ102	M.RESISTOR CH 1/10W 1K	1	
R291		ERJ6GEYJ471	M.RESISTOR CH 1/10W 470	1	
R292		ERJ6GEYJ473	M.RESISTOR CH 1/10W 47K	1	
R293		ERJ6GEYJ822	M.RESISTOR CH 1/10W 8.2K	1	
R294		ERJ6GEYJ103	M.RESISTOR CH 1/10W 10K	1	
R295		ERJ6GEYJ105	M.RESISTOR CH 1/10W 1M	1	
R296		ERJ6GEYJ223	M.RESISTOR CH 1/10W 22K	1	
R297		ERJ6GEYJ102	M.RESISTOR CH 1/10W 1K	1	
R298-00		ERJ6GEYJ223	M.RESISTOR CH 1/10W 22K	3	
R301		ERJ6GEYJ101	M.RESISTOR CH 1/10W 100	1	
R351		ERJ6GEY0R00	M.RESISTOR CH 1/10W 0	1	
R353		ERJ6GEY0R00	M.RESISTOR CH 1/10W 0	1	

Refer to the P.C.BOARDS LIST, page 6-1-1, before using this page.

Ref.No.		Part No.	Part Name & Description	Pcs	Remarks
R355-58		ERJ6GEY0R00	M.RESISTOR CH 1/10W 0	4	
R361		ERJ6GEY0R00	M.RESISTOR CH 1/10W 0	1	
R366-68		ERJ6GEY0R00	M.RESISTOR CH 1/10W 0	3	
R375		ERJ6GEY0R00	M.RESISTOR CH 1/10W 0	1	
R380		ERJ6GEY0R00	M.RESISTOR CH 1/10W 0	1	
R401		ERJ6GEYJ103	M.RESISTOR CH 1/10W 10K	1	
R402		ERJ6GEYJ102	M.RESISTOR CH 1/10W 1K	1	
R403		ERJ6GEYJ393	M.RESISTOR CH 1/10W 39K	1	
R404		ERJ6GEYJ472	M.RESISTOR CH 1/10W 4.7K	1	
R405		ERJ6GEYJ562	M.RESISTOR CH 1/10W 5.6K	1	
R406		ERJ6GEYJ103	M.RESISTOR CH 1/10W 10K	1	
R408		ERJ6GEYJ183	M.RESISTOR CH 1/10W 18K	1	
R409		ERJ6GEYJ681	M.RESISTOR CH 1/10W 680	1	
R410		ERJ6GEYJ682	M.RESISTOR CH 1/10W 6.8K	1	
R411-17		ERJ6GEYJ393	M.RESISTOR CH 1/10W 39K	7	
R418,19		ERJ6GEYJ101	M.RESISTOR CH 1/10W 100	2	
R420		ERJ6GEYJ103	M.RESISTOR CH 1/10W 10K	1	
R421,22		ERJ6GEYJ392	M.RESISTOR CH 1/10W 3.9K	2	
R423		ERJ6GEYJ562	M.RESISTOR CH 1/10W 5.6K	1	
R424		ERJ6GEYJ272	M.RESISTOR CH 1/10W 2.7K	1	
R425		ERJ6GEYJ562	M.RESISTOR CH 1/10W 5.6K	1	
R426		ERJ6GEYJ392	M.RESISTOR CH 1/10W 3.9K	1	
R427		ERJ6GEYJ272	M.RESISTOR CH 1/10W 2.7K	1	
R428		ERJ6GEYJ563	M.RESISTOR CH 1/10W 56K	1	
R429		ERJ6GEYJ562	M.RESISTOR CH 1/10W 5.6K	1	
R430		ERJ6GEYJ103	M.RESISTOR CH 1/10W 10K	1	
R431		ERJ6GEYJ183	M.RESISTOR CH 1/10W 18K	1	
R432		ERJ6GEYJ681	M.RESISTOR CH 1/10W 680	1	
R433		ERJ6GEYJ393	M.RESISTOR CH 1/10W 39K	1	
R434		ERJ6GEYJ471	M.RESISTOR CH 1/10W 470	1	
R435		ERJ6GEYJ273	M.RESISTOR CH 1/10W 27K	1	
R436		ERJ6GEYJ823	M.RESISTOR CH 1/10W 82K	1	
R438-41		ERJ6GEY0R00	M.RESISTOR CH 1/10W 0	4	
R444		ERJ6GEY0R00	M.RESISTOR CH 1/10W 0	1	
R445		ERJ6GEYJ152	M.RESISTOR CH 1/10W 1.5K	1	
R446		ERJ6GEYJ392	M.RESISTOR CH 1/10W 3.9K	1	
R447		ERJ6GEYJ562	M.RESISTOR CH 1/10W 5.6K	1	
R448		ERJ6GEY0R00	M.RESISTOR CH 1/10W 0	1	
R450		ERJ6GEYJ393	M.RESISTOR CH 1/10W 39K	1	
R451		ERJ6GEYJ471	M.RESISTOR CH 1/10W 470	1	
R452		ERJ6GEYJ682	M.RESISTOR CH 1/10W 6.8K	1	
R453		ERJ6GEYJ183	M.RESISTOR CH 1/10W 18K	1	
R454,55		ERJ6GEY0R00	M.RESISTOR CH 1/10W 0	2	
R456		ERJ6GEYJ563	M.RESISTOR CH 1/10W 56K	1	
R457		ERJ6GEYJ472	M.RESISTOR CH 1/10W 4.7K	1	
R458		ERJ6GEYJ683	M.RESISTOR CH 1/10W 68K	1	
R459		ERJ6GEYJ103	M.RESISTOR CH 1/10W 10K	1	
R461		ERJ6GEYJ273	M.RESISTOR CH 1/10W 27K	1	
R462		ERJ6GEYJ101	M.RESISTOR CH 1/10W 100	1	
R464		ERJ6GEYJ562	M.RESISTOR CH 1/10W 5.6K	1	
R465		ERJ6GEYJ183	M.RESISTOR CH 1/10W 18K	1	
R466,67		ERJ6GEYJ182	M.RESISTOR CH 1/10W 1.8K	2	
R468		ERJ6GEYJ153	M.RESISTOR CH 1/10W 15K	1	
R469		ERJ6GEYJ681	M.RESISTOR CH 1/10W 680	1	
R470		ERJ6GEYJ123	M.RESISTOR CH 1/10W 12K	1	
R471		ERJ6GEYJ821	M.RESISTOR CH 1/10W 820	1	
R472		ERJ6GEYJ153	M.RESISTOR CH 1/10W 15K	1	
R473		ERJ6GEYJ182	M.RESISTOR CH 1/10W 1.8K	1	
R474		ERJ6GEYJ153	M.RESISTOR CH 1/10W 15K	1	
R475,76		ERJ6GEYJ332	M.RESISTOR CH 1/10W 3.3K	2	
R477		ERJ6GEYJ222	M.RESISTOR CH 1/10W 2.2K	1	
R478		ERJ6GEYJ562	M.RESISTOR CH 1/10W 5.6K	1	
R480		ERJ6GEYJ273	M.RESISTOR CH 1/10W 27K	1	
R481		ERJ6GEYJ153	M.RESISTOR CH 1/10W 15K	1	
R482		ERJ6GEYJ682	M.RESISTOR CH 1/10W 6.8K	1	
R483		ERJ6GEYJ152	M.RESISTOR CH 1/10W 1.5K	1	
R484,85		ERJ6GEYJ102	M.RESISTOR CH 1/10W 1K	2	
R486,87		ERJ6GEYJ103	M.RESISTOR CH 1/10W 10K	2	
R488		ERJ6GEYJ123	M.RESISTOR CH 1/10W 12K	1	
R489		ERJ6GEYJ183	M.RESISTOR CH 1/10W 18K	1	
R491		ERJ6GEY0R00	M.RESISTOR CH 1/10W 0	1	
R493		ERJ6GEY0R00	M.RESISTOR CH 1/10W 0	1	
R495,96		ERJ6GEY0R00	M.RESISTOR CH 1/10W 0	2	
R498		ERJ6GEYJ562	M.RESISTOR CH 1/10W 5.6K	1	
R499		ERJ6GEYJ472	M.RESISTOR CH 1/10W 4.7K	1	

Ref.No.		Part No.	Part Name & Description	Pcs	Remarks
R502		ERJ6GEYJ152	M.RESISTOR CH 1/10W 1.5K	1	
R503,04		ERJ6GEYJ102	M.RESISTOR CH 1/10W 1K	2	
R524		ERJ6GEYJ152	M.RESISTOR CH 1/10W 1.5K	1	
R525		ERJ6GEYJ101	M.RESISTOR CH 1/10W 100	1	
R529		ERJ6GEY0R00	M.RESISTOR CH 1/10W 0	1	
R530		ERJ6GEYJ102	M.RESISTOR CH 1/10W 1K	1	
R531		ERJ6GEYJ101	M.RESISTOR CH 1/10W 100	1	
R532		ERJ6GEY0R00	M.RESISTOR CH 1/10W 0	1	
R569		ERJ6GEYJ562	M.RESISTOR CH 1/10W 5.6K	1	
RA1,A2		EXBF9E332J	COMBI.R-R 33K	2	
RA4-A9		EXBF9E332J	COMBI.R-R 33K	6	
RA10-18		EXBF9E332J	COMBI.R-R 33K	9	
SW7,W8		VSS0126	SWITCH	2	
SW201		VSS0126	SWITCH	1	
SW203		VSR0045	SWITCH	1	
TP1,P2		VJR0646	TEST POINT	2	
TP201-08		VJR0646	TEST POINT	8	
TP210-15		VJR0646	TEST POINT	6	
TP412,13		VJR0646	TEST POINT	2	
TP416,17		VJR0646	TEST POINT	2	
TP422-27		VJR0646	TEST POINT	6	
TPG201		VJR0646	TEST POINT	1	
TPG401,02		VJR0646	TEST POINT	2	
VR1		VRV0109B103	V.RESISTOR 10K	1	
VR2		VRV0109B202	V.RESISTOR 2K	1	
VR201		VRV0109B203	V.RESISTOR 20K	1	
VR202		VRV0109B103	V.RESISTOR 10K	1	
VR204		VRV0064B502	V.RESISTOR 5K	1	
VR205		VRV0109B502	V.RESISTOR 5K	1	
VR206,07		VRV0064B502	V.RESISTOR 5K	2	
VR401,02		VRV0109B502	V.RESISTOR 5K	2	
VR403		VRV0109B202	V.RESISTOR 2K	1	
VR405,06		VRV0064B502	V.RESISTOR 5K	2	
VR408		VRV0109B202	V.RESISTOR 2K	1	
VR409		VRV0109B502	V.RESISTOR 5K	1	
X201		VSX0114	CRYSTAL OSCILLATOR	1	
X202		VSX0270	CRYSTAL OSCILLATOR	1	
X203,04		VSX0280	CRYSTAL OSCILLATOR	2	
X501		VSX0211	CRYSTAL OSCILLATOR	1	
			MISCELLANEOUS		
		VML2143	CARD PULLER	1	
		VML2144	CARD PULLER	1	
		VMS4174	PIN	6	
		VMZ1091	BARRIER	1	
		VMZ1547	BARRIER	1	
		VSC3056	SHIELD CASE	1	
		VXA3966	P.C.B. SHIELD PLATE	1	
		XNG26E	NUT	4	
		XYNV3+K6FR	SCREW	6	
		XYN26+C12	SCREW	4	

Refer to the P.C.BOARDS LIST, page 6-1-1, before using this page.

Ref.No.		Part No.	Part Name & Description	Pcs	Remarks
	■	VEP88063A	P.C.BOARD W/COMPONENT		
			W2 ENCODER		
			CAPACITORS		
C1		ECUM1H103KBN	C.CAPACITOR CH 50V 0.01U	1	
C2		ECEA1CU221	E.CAPACITOR 16V 220U	1	
C3		ECUM1H103KBN	C.CAPACITOR CH 50V 0.01U	1	
C4		ECEA0JU101	E.CAPACITOR 6.3V 100U	1	
C5		ECUM1H103KBN	C.CAPACITOR CH 50V 0.01U	1	
C6		ECEA1CU221	E.CAPACITOR 16V 220U	1	
C7-C9		ECUM1H103KBN	C.CAPACITOR CH 50V 0.01U	3	
C10		ECUM1H103KBN	C.CAPACITOR CH 50V 0.01U	1	
C11		ECEA1AU101	E.CAPACITOR 10V 100U	1	
C12,13		ECUM1H103KBN	C.CAPACITOR CH 50V 0.01U	2	
C14		ECEA1AU101	E.CAPACITOR 10V 100U	1	
C15		ECUM1H470JCN	C.CAPACITOR CH 50V 47P	1	
C16		ECUM1H103KBN	C.CAPACITOR CH 50V 0.01U	1	
C17		ECUM1H330JCN	C.CAPACITOR CH 50V 33P	1	
C18		ECUM1H103KBN	C.CAPACITOR CH 50V 0.01U	1	
C19,20		ECEA1CU221	E.CAPACITOR 16V 220U	2	
C21,22		ECUM1H103KBN	C.CAPACITOR CH 50V 0.01U	2	
C23		ECUM1H470JCN	C.CAPACITOR CH 50V 47P	1	
C24,25		ECUM1H151JCN	C.CAPACITOR CH 50V 150P	2	
C26		ECUM1E104ZFN	C.CAPACITOR CH 25V 0.1U	1	
C27		ECUM1H270JCN	C.CAPACITOR CH 50V 27P	1	
C28		ECQM1H183JF	P.CAPACITOR 50V 0.018U	1	
C29		ECUM1H103KBN	C.CAPACITOR CH 50V 0.01U	1	
C30		ECEA1EN4R7S	E.CAPACITOR 25V 4.7U	1	
C31		ECEA1HN2R2S	E.CAPACITOR 50V 2.2U	1	
C32		ECUM1H103KBN	C.CAPACITOR CH 50V 0.01U	1	
C33		ECEA0JU101	E.CAPACITOR 6.3V 100U	1	
C35		ECEA0JU221	E.CAPACITOR 6.3V 220U	1	
C36		ECUM1H103KBN	C.CAPACITOR CH 50V 0.01U	1	
C37		ECEA0JU221	E.CAPACITOR 6.3V 220U	1	
C38-46		ECUM1H103KBN	C.CAPACITOR CH 50V 0.01U	9	
C49,50		ECUM1H103KBN	C.CAPACITOR CH 50V 0.01U	2	
C51		ECEA1AU101	E.CAPACITOR 10V 100U	1	
C52		ECUM1E104ZFN	C.CAPACITOR CH 25V 0.1U	1	
C53		ECUM1H103KBN	C.CAPACITOR CH 50V 0.01U	1	
C54		ECEA1AU101	E.CAPACITOR 10V 100U	1	
C56		ECUM1H103KBN	C.CAPACITOR CH 50V 0.01U	1	
C57		ECUM1H150JCN	C.CAPACITOR CH 50V 15P	1	
C58		ECUM1H103KBN	C.CAPACITOR CH 50V 0.01U	1	
C59		ECEA0JU101	E.CAPACITOR 6.3V 100U	1	
C60		ECUM1H120JCN	C.CAPACITOR CH 50V 12P	1	
C61		ECEA0JU221	E.CAPACITOR 6.3V 220U	1	
C62		ECUM1H103KBN	C.CAPACITOR CH 50V 0.01U	1	
C63		ECEA0JU221	E.CAPACITOR 6.3V 220U	1	
C64-73		ECUM1H103KBN	C.CAPACITOR CH 50V 0.01U	10	
C76		ECUM1H270JCN	C.CAPACITOR CH 50V 27P	1	
C77		ECUM1E104ZFN	C.CAPACITOR CH 25V 0.1U	1	
C78		ECQM1H223JF	P.CAPACITOR 50V 0.022U	1	
C79		ECUM1H103KBN	C.CAPACITOR CH 50V 0.01U	1	
C80		ECEA1HN100S	E.CAPACITOR 50V 10U	1	
C81		ECEA1HN2R2S	E.CAPACITOR 50V 2.2U	1	
C82,83		ECUM1E104ZFN	C.CAPACITOR CH 25V 0.1U	2	
C84		ECEA0JU470	E.CAPACITOR 6.3V 47U	1	
C85,86		ECUM1E104ZFN	C.CAPACITOR CH 25V 0.1U	2	
C87		ECUM1H103KBN	C.CAPACITOR CH 50V 0.01U	1	
C88		ECUM1E104ZFN	C.CAPACITOR CH 25V 0.1U	1	
C113		ECUM1E104ZFN	C.CAPACITOR CH 25V 0.1U	1	
C114-17		ECUM1H103KBN	C.CAPACITOR CH 50V 0.01U	4	
C120		ECUM1H103KBN	C.CAPACITOR CH 50V 0.01U	1	
C121		ECEA1AU470	E.CAPACITOR 10V 47U	1	
C122		ECUM1H103KBN	C.CAPACITOR CH 50V 0.01U	1	
C123		ECUM1C104KBN	C.CAPACITOR CH 16V 0.1U	1	
C124		ECUM1H181JCN	C.CAPACITOR CH 50V 180P	1	
C125		ECUM1E104ZFN	C.CAPACITOR CH 25V 0.1U	1	
C126		ECUM1C104KBN	C.CAPACITOR CH 16V 0.1U	1	
C127		ECUM1H180JCN	C.CAPACITOR CH 50V 18P	1	
C128		ECUM1H680JCN	C.CAPACITOR CH 50V 68P	1	
C129,30		ECUM1C104KBN	C.CAPACITOR CH 16V 0.1U	2	
C131		ECEA1HN010S	E.CAPACITOR 50V 1U	1	
C132		ECUM1H103KBN	C.CAPACITOR CH 50V 0.01U	1	
C133		ECEA1AU470	E.CAPACITOR 10V 47U	1	
C134		ECUM1H820JCN	C.CAPACITOR CH 50V 82P	1	
C135		ECUM1H122JN	C.CAPACITOR CH 50V 1200P	1	
C137		ECUM1H470JCN	C.CAPACITOR CH 50V 47P	1	
C138		ECUM1H821JCN	C.CAPACITOR CH 50V 820P	1	
C139-41		ECUM1H103KBN	C.CAPACITOR CH 50V 0.01U	3	
C142		ECEA1AU470	E.CAPACITOR 10V 47U	1	
C143,44		ECUM1C104KBN	C.CAPACITOR CH 16V 0.1U	2	
C145		ECUM1H121JCN	C.CAPACITOR CH 50V 120P	1	
C146		ECUM1E104ZFN	C.CAPACITOR CH 25V 0.1U	1	
C147-49		ECUM1C104KBN	C.CAPACITOR CH 16V 0.1U	3	
C150		ECEA1HN010S	E.CAPACITOR 50V 1U	1	
C151		ECUM1H103KBN	C.CAPACITOR CH 50V 0.01U	1	
C152		ECEA1AU470	E.CAPACITOR 10V 47U	1	
C154		ECUM1H820JCN	C.CAPACITOR CH 50V 82P	1	
C155		ECUM1H122JN	C.CAPACITOR CH 50V 1200P	1	
C157		ECUM1H470JCN	C.CAPACITOR CH 50V 47P	1	
C158-60		ECUM1H821JCN	C.CAPACITOR CH 50V 820P	3	
C161,62		ECEA1AN470S	E.CAPACITOR 10V 47U	2	
C163		ECEA1CU470	E.CAPACITOR 16V 47U	1	
C164		ECQM1H104JF	P.CAPACITOR 50V 0.1U	1	
C165		ECEA1AN470S	E.CAPACITOR 10V 47U	1	
C200		ECUM1H103KBN	C.CAPACITOR CH 50V 0.01U	1	
C201		ECEA1AU101	E.CAPACITOR 10V 100U	1	
C202,03		ECUM1H103KBN	C.CAPACITOR CH 50V 0.01U	2	
C204		ECEA1AU101	E.CAPACITOR 10V 100U	1	
C205		ECUM1H103KBN	C.CAPACITOR CH 50V 0.01U	1	
C206		ECUM1H150JCN	C.CAPACITOR CH 50V 15P	1	
C207		ECUM1H470JCN	C.CAPACITOR CH 50V 47P	1	
C209		ECUM1H220JCN	C.CAPACITOR CH 50V 22P	1	
C210		ECUM1H100DCN	C.CAPACITOR CH 50V 10P	1	
C211		ECUM1C104KBN	C.CAPACITOR CH 16V 0.1U	1	
C212		ECUM1E104ZFN	C.CAPACITOR CH 25V 0.1U	1	
C213		ECUM1H221JCN	C.CAPACITOR CH 50V 220P	1	
C214		ECUM1H270JCN	C.CAPACITOR CH 50V 27P	1	
C215		ECUM1H103KBN	C.CAPACITOR CH 50V 0.01U	1	
C219		ECUM1H560JCN	C.CAPACITOR CH 50V 56P	1	
C220		ECUM1E104ZFN	C.CAPACITOR CH 25V 0.1U	1	
C223		ECUM1H221JCN	C.CAPACITOR CH 50V 220P	1	
C224		ECUM1H030DCN	C.CAPACITOR CH 50V 3P	1	
C226		ECEA1HNR47S	E.CAPACITOR 50V 0.47U	1	
C227,28		ECUM1H103KBN	C.CAPACITOR CH 50V 0.01U	2	
C229		ECEA1AU101	E.CAPACITOR 10V 100U	1	
C230,31		ECUM1H103KBN	C.CAPACITOR CH 50V 0.01U	2	
C232		ECEA1AU101	E.CAPACITOR 10V 100U	1	
C233		ECUM1H103KBN	C.CAPACITOR CH 50V 0.01U	1	
C235		ECUM1H120JCN	C.CAPACITOR CH 50V 12P	1	
C236		ECUM1H560JCN	C.CAPACITOR CH 50V 56P	1	
C238		ECUM1H100DCN	C.CAPACITOR CH 50V 10P	1	
C239		ECUM1H680JCN	C.CAPACITOR CH 50V 68P	1	
C240		ECUM1H121JCN	C.CAPACITOR CH 50V 120P	1	
C241		ECUM1H100DCN	C.CAPACITOR CH 50V 10P	1	
C242		ECEA1HNR47S	E.CAPACITOR 50V 0.47U	1	
C243		ECUM1C104KBN	C.CAPACITOR CH 16V 0.1U	1	
C245		ECUM1H103KBN	C.CAPACITOR CH 50V 0.01U	1	
C247		ECUM1H103KBN	C.CAPACITOR CH 50V 0.01U	1	
C248		ECEA0JU470	E.CAPACITOR 6.3V 47U	1	
C249		ECUM1H103KBN	C.CAPACITOR CH 50V 0.01U	1	
C257,58		ECUM1E104ZFN	C.CAPACITOR CH 25V 0.1U	2	
C260		ECUM1H221JCN	C.CAPACITOR CH 50V 220P	1	
C261		ECUM1H030DCN	C.CAPACITOR CH 50V 3P	1	
C263		ECUM1H103KBN	C.CAPACITOR CH 50V 0.01U	1	
C264		ECEA1HNR47S	E.CAPACITOR 50V 0.47U	1	
C266,67		ECUM1E104ZFN	C.CAPACITOR CH 25V 0.1U	2	
C268		ECUM1H103KBN	C.CAPACITOR CH 50V 0.01U	1	
C269		ECEA1AU101	E.CAPACITOR 10V 100U	1	
C270,71		ECUM1H103KBN	C.CAPACITOR CH 50V 0.01U	2	
C272		ECEA1AU101	E.CAPACITOR 10V 100U	1	
C273		ECUM1H103KBN	C.CAPACITOR CH 50V 0.01U	1	

Refer to the P.C.BOARDS LIST, page 6-1-1, before using this page.

Ref.No.		Part No.	Part Name & Description	Pcs	Remarks
C275		ECUM1H120JCN	C.CAPACITOR CH 50V 12P	1	
C276		ECUM1H560JCN	C.CAPACITOR CH 50V 56P	1	
C278		ECUM1H100DCN	C.CAPACITOR CH 50V 10P	1	
C279		ECUM1H680JCN	C.CAPACITOR CH 50V 68P	1	
C280		ECUM1H121JCN	C.CAPACITOR CH 50V 120P	1	
C281		ECUM1H100DCN	C.CAPACITOR CH 50V 10P	1	
C282		ECUM1C104KBN	C.CAPACITOR CH 16V 0.1U	1	
C284		ECUM1H103KBN	C.CAPACITOR CH 50V 0.01U	1	
C291		ECUM1H103KBN	C.CAPACITOR CH 50V 0.01U	1	
C292		ECEA1CU221	E.CAPACITOR 16V 220U	1	
C293		ECUM1H103KBN	C.CAPACITOR CH 50V 0.01U	1	
C294		ECEA0JU101	E.CAPACITOR 6.3V 100U	1	
C297,98		ECUM1E104ZFN	C.CAPACITOR CH 25V 0.1U	2	
C299		ECUM1H103KBN	C.CAPACITOR CH 50V 0.01U	1	
C300		ECEA1AU101	E.CAPACITOR 10V 100U	1	
C301		ECUM1H103KBN	C.CAPACITOR CH 50V 0.01U	1	
C302		ECUM1H120JCN	C.CAPACITOR CH 50V 12P	1	
C303		ECUM1H121JCN	C.CAPACITOR CH 50V 120P	1	
C304		ECUM1H180JCN	C.CAPACITOR CH 50V 18P	1	
C305,06		ECEA1HNR47S	E.CAPACITOR 50V 0.47U	2	
C307,08		ECQM1H104JF	P.CAPACITOR 50V 0.1U	2	
C311		ECUM1H560JCN	C.CAPACITOR CH 50V 56P	1	
C312,13		ECUM1H120JCN	C.CAPACITOR CH 50V 12P	2	
C314		ECUM1H560JCN	C.CAPACITOR CH 50V 56P	1	
C501,02		ECEA1CU101	E.CAPACITOR 16V 100U	2	
C503		ECUM1H330JCN	C.CAPACITOR CH 50V 33P	1	
C504		ECUM1C104KBN	C.CAPACITOR CH 16V 0.1U	1	
C505		ECUM1H103KBN	C.CAPACITOR CH 50V 0.01U	1	
C506		ECEA1HNR47S	E.CAPACITOR 50V 0.47U	1	
C507,08		ECUM1H103KBN	C.CAPACITOR CH 50V 0.01U	2	
C510		ECUM1H103KBN	C.CAPACITOR CH 50V 0.01U	1	
C517		ECUM1H103KBN	C.CAPACITOR CH 50V 0.01U	1	
C518		ECUM1H330JCN	C.CAPACITOR CH 50V 33P	1	
C520		ECUM1H103KBN	C.CAPACITOR CH 50V 0.01U	1	
C521		ECEA0JU470	E.CAPACITOR 6.3V 47U	1	
C522		ECUM1H220JCN	C.CAPACITOR CH 50V 22P	1	
C523		ECUM1H181JCN	C.CAPACITOR CH 50V 180P	1	
C524		ECUM1H103KBN	C.CAPACITOR CH 50V 0.01U	1	
C525		ECEA0JU101	E.CAPACITOR 6.3V 100U	1	
C526		ECUM1H103KBN	C.CAPACITOR CH 50V 0.01U	1	
C527,28		ECEA1CU101	E.CAPACITOR 16V 100U	2	
C531		ECEA1CU101	E.CAPACITOR 16V 100U	1	
C532		ECUM1H103KBN	C.CAPACITOR CH 50V 0.01U	1	
C533		ECEA1CU101	E.CAPACITOR 16V 100U	1	
C534,35		ECUM1H103KBN	C.CAPACITOR CH 50V 0.01U	2	
C536,37		ECUM1H560JCN	C.CAPACITOR CH 50V 56P	2	
C538,39		ECUM1H103KBN	C.CAPACITOR CH 50V 0.01U	2	
C540		ECUM1E104ZFN	C.CAPACITOR CH 25V 0.1U	1	
C541		ECUM1H330JCN	C.CAPACITOR CH 50V 33P	1	
C542		ECUM1H271JCN	C.CAPACITOR CH 50V 270P	1	
C543		ECUM1H680JCN	C.CAPACITOR CH 50V 68P	1	
C544		ECUM1H070DCN	C.CAPACITOR CH 50V 7P	1	
C545		ECUM1H220JCN	C.CAPACITOR CH 50V 22P	1	
C546		ECUM1H121JCN	C.CAPACITOR CH 50V 120P	1	
C547		ECUM1H100DCN	C.CAPACITOR CH 50V 10P	1	
C550		ECUM1H103KBN	C.CAPACITOR CH 50V 0.01U	1	
C551		ECUM1H471JCN	C.CAPACITOR CH 50V 470P	1	
C552		ECUM1H270JCN	C.CAPACITOR CH 50V 27P	1	
C553		ECUM1H103KBN	C.CAPACITOR CH 50V 0.01U	1	
C554		ECUM1E104ZFN	C.CAPACITOR CH 25V 0.1U	1	
C555		ECUM1H103KBN	C.CAPACITOR CH 50V 0.01U	1	
C559		ECEA0JU470	E.CAPACITOR 6.3V 47U	1	
C560		ECUM1H103KBN	C.CAPACITOR CH 50V 0.01U	1	
C561		ECEA0JN330S	E.CAPACITOR 6.3V 33U	1	
C562		ECUM1H680JCN	C.CAPACITOR CH 50V 68P	1	
C563		ECUM1H271JCN	C.CAPACITOR CH 50V 270P	1	
C564		ECUM1H151JCN	C.CAPACITOR CH 50V 150P	1	
C565		ECUM1H471JCN	C.CAPACITOR CH 50V 470P	1	
C566		ECEA1CU470	E.CAPACITOR 16V 47U	1	
C567-69		ECUM1H103KBN	C.CAPACITOR CH 50V 0.01U	3	
C570		ECEA1CU470	E.CAPACITOR 16V 47U	1	
C571		ECUM1H103KBN	C.CAPACITOR CH 50V 0.01U	1	
C572		ECUM1E104ZFN	C.CAPACITOR CH 25V 0.1U	1	
C573		ECUM1H103KBN	C.CAPACITOR CH 50V 0.01U	1	
C574,75		ECUM1H220JCN	C.CAPACITOR CH 50V 22P	2	

Ref.No.		Part No.	Part Name & Description	Pcs	Remarks
C576,77		ECUM1H103KBN	C.CAPACITOR CH 50V 0.01U	2	
C578		ECEA0JU101	E.CAPACITOR 6.3V 100U	1	
C579		ECUM1E104ZFN	C.CAPACITOR CH 25V 0.1U	1	
C580,81		ECUM1H220JCN	C.CAPACITOR CH 50V 22P	2	
C582		ECEA0JU101	E.CAPACITOR 6.3V 100U	1	
C583		ECUM1E104ZFN	C.CAPACITOR CH 25V 0.1U	1	
C584		ECUM1H103KBN	C.CAPACITOR CH 50V 0.01U	1	
C585		ECUM1H820JCN	C.CAPACITOR CH 50V 82P	1	
C586		ECUM1H100DCN	C.CAPACITOR CH 50V 10P	1	
C587,88		ECUM1H103KBN	C.CAPACITOR CH 50V 0.01U	2	
C589		ECUM1H271JCN	C.CAPACITOR CH 50V 270P	1	
C590		ECUM1H221JCN	C.CAPACITOR CH 50V 220P	1	
C591		ECUM1H820JCN	C.CAPACITOR CH 50V 82P	1	
C592-97		ECUM1H103KBN	C.CAPACITOR CH 50V 0.01U	6	
C598		ECEA1CU101	E.CAPACITOR 16V 100U	1	
C599,00		ECUM1H103KBN	C.CAPACITOR CH 50V 0.01U	2	
C601		ECEA1CU101	E.CAPACITOR 16V 100U	1	
C602		ECUM1H103KBN	C.CAPACITOR CH 50V 0.01U	1	
C603		ECEA1AU101	E.CAPACITOR 10V 100U	1	
C604		ECUM1H103KBN	C.CAPACITOR CH 50V 0.01U	1	
C605		ECEA1AU101	E.CAPACITOR 10V 100U	1	
C606		ECUM1H103KBN	C.CAPACITOR CH 50V 0.01U	1	
C607		ECEA0JU101	E.CAPACITOR 6.3V 100U	1	
C608		ECUM1H103KBN	C.CAPACITOR CH 50V 0.01U	1	
C609		ECEA0JU101	E.CAPACITOR 6.3V 100U	1	
C610		ECUM1H103KBN	C.CAPACITOR CH 50V 0.01U	1	
C611		ECUM1E104ZFN	C.CAPACITOR CH 25V 0.1U	1	
C612		ECUM1H103KBN	C.CAPACITOR CH 50V 0.01U	1	
C615-18		ECUM1H103KBN	C.CAPACITOR CH 50V 0.01U	4	
C619		ECUM1H221JCN	C.CAPACITOR CH 50V 220P	1	
C620		ECQM1H104JF	P.CAPACITOR 50V 0.1U	1	
C621		ECEA1CU100	E.CAPACITOR 16V 10U	1	
C622		ECQM1H104JF	P.CAPACITOR 50V 0.1U	1	
C623		ECEA1CU470	E.CAPACITOR 16V 47U	1	
C624		ECQM1H104JF	P.CAPACITOR 50V 0.1U	1	
C625		ECEA1CU470	E.CAPACITOR 16V 47U	1	
C626		ECQM1H104JF	P.CAPACITOR 50V 0.1U	1	
C627,28		ECUM1H122JN	C.CAPACITOR CH 50V 1200P	2	
C629		ECUM1H221JCN	C.CAPACITOR CH 50V 220P	1	
C630,31		ECUM1H122JN	C.CAPACITOR CH 50V 1200P	2	
C632		ECUM1H103KBN	C.CAPACITOR CH 50V 0.01U	1	
C634,35		ECCF1H270JC	C.CAPACITOR 50V 27P	2	
C839		ECUM1H222KBN	C.CAPACITOR CH 50V 2200P	1	
C840		ECUM1H682KBN	C.CAPACITOR CH 50V 6800P	1	
C1001		ECEA1HU010	E.CAPACITOR 50V 1U	1	
C1003,04		ECEA1CN100S	E.CAPACITOR 16V 10U	2	
C1005		ECKF1H221KB	C.CAPACITOR 50V 220P	1	
C1006		ECUM1H470JCN	C.CAPACITOR CH 50V 47P	1	
D1		1SZ51	DIODE	1	
D2		MA153	DIODE	1	
D4		MA153	DIODE	1	
D8		MA151WK	DIODE	1	
D11		MA151WK	DIODE	1	
D200,01		RD4.7EB2	ZENER 4.7V	2	
D203,04		MA151K	DIODE	2	
D210		MA151K	DIODE	1	
D501		RD3.6EB	ZENER 3.6V	1	
D508		RD4.7EB2	ZENER 4.7V	1	
D509		MA151K	DIODE	1	
D510,11		MA335R	DIODE	2	
D514		MA151K	DIODE	1	
FL1		VLF0650	FILTER	1	
FL3		VLF0754	FILTER	1	
FL200		VLF0712	FILTER	1	
FL201,02		VLF0753	FILTER	2	
IC1		AN78N09	IC	1	

Refer to the P.C.BOARDS LIST, page 6-1-1, before using this page.

Ref.No.		Part No.	Part Name & Description	Pcs	Remarks
IC2		AN79N09	IC	1	
IC3		MC74HC4053F	IC	1	
IC4-C6		TL082CPS	IC	3	
IC7		HA19211BNT	IC	1	
IC8		MC74HC574F	IC	1	(R)
IC9		TL082CPS	IC	1	
IC10-12		TL082CPS	IC	3	
IC13		HA19211BNT	IC	1	
IC14		MC74HC574F	IC	1	(R)
IC15		AN78N09	IC	1	
IC16		AN79N09	IC	1	
IC17		AN79L05	IC	1	
IC18,19		AN78N05	IC	2	
IC26,27		AN91A12S	IC	2	
IC28		MC74HC08AF	IC	1	
IC29		SN74LS123NS	IC	1	
IC30		NE521D	IC	1	
IC32		AN78N05	IC	1	
IC33		AN79N05	IC	1	
IC200		AN78N09	IC	1	
IC201		AN79N09	IC	1	
IC202		AN78N09	IC	1	
IC203		AN79N09	IC	1	
IC204		AN78N09	IC	1	
IC205		AN79N09	IC	1	
IC206		TL082CPS	IC	1	
IC207		CA3054	IC	1	
IC208-10		TL082CPS	IC	3	
IC211		AN78L05	IC	1	
IC215		TL082CPS	IC	1	
IC216		AN79L09	IC	1	
IC501		TL082CPS	IC	1	
IC502,03		CA3054	IC	2	
IC504,05		NJM1496M	IC	2	
IC506		10116D	IC	1	
IC507		MC74HC04AF	IC	1	
IC508		NJM1496M	IC	1	
IC509		MC74HC00AF	IC	1	
IC510		MC74HC74AF	IC	1	
IC511		SN74LS123NS	IC	1	
IC512		10116D	IC	1	
IC517		AN78N09	IC	1	
IC518		AN79N09	IC	1	
IC519		AN78N05	IC	1	
IC520		AN79N05	IC	1	
IC521		AN78N09	IC	1	
IC522		AN79N09	IC	1	
IC523		MC74HC04AF	IC	1	
IC822		SN74LS221NS	IC	1	
IC823		MC74HC00AF	IC	1	
L1-L3		VLP0017	COIL	3	
L5		VLQEL05S821J	COIL 820UH	1	
L6-L9		VLP0017	COIL	4	
L10		VLQEL05S221J	COIL 220UH	1	
L11		VLQEL05S560J	COIL 56UH	1	
L12		VLQEL05S3R9J	COIL 3.9UH	1	
L13		VLQEL05S101J	COIL 100UH	1	
L15		VLQEL05S6R8J	COIL 6.8UH	1	
L16		VLQEL05S560J	COIL 56UH	1	
L17		VLQEL05S3R9J	COIL 3.9UH	1	
L18		VLQEL05S101J	COIL 100UH	1	
L20		VLQEL05S6R8J	COIL 6.8UH	1	
L200		VLQEL05S6R8J	COIL 6.8UH	1	
L201		ERDS2T0	C.RESISTOR 1/4W 0	1	
L203		ERDS2T0	C.RESISTOR 1/4W 0	1	
L205,06		VLP0017	COIL	2	
L208,09		VLQEL05S6R8J	COIL 6.8UH	2	
L210		VLQEL05S470J	COIL 47UH	1	
L211,12		VLQEL05S6R8J	COIL 6.8UH	2	
L501,02		VLQEL05F101K	COIL 100UH	2	
L503		VLQEL05S6R8J	COIL 6.8UH	1	
L505		VLQEL05F101K	COIL 100UH	1	

Ref.No.		Part No.	Part Name & Description	Pcs	Remarks
L506		VLQEL05S680J	COIL 68UH	1	
L507,08		VLQEL05F101K	COIL 100UH	2	
L511		VLQEL05S270J	COIL 27UH	1	
L512		VLQEL05S6R8J	COIL 6.8UH	1	
L513		VLQEL05S5R6J	COIL 5.6UH	1	
L514		VLQEL05S180J	COIL 18UH	1	
L515		VLQEL05S560J	COIL 56UH	1	
L518,19		VLQEL05F101K	COIL 100UH	2	
L520,21		VLQEL05S470J	COIL 47UH	2	
L522,23		VLP0017	COIL	2	
Q1		2SD601	TRANSISTOR CHIP	1	(Q,R)
Q2		2SB709	TRANSISTOR CHIP	1	(Q,R)
Q3		2SD601	TRANSISTOR CHIP	1	(Q,R)
Q4,Q5		2SB709	TRANSISTOR CHIP	2	(Q,R)
Q6,Q7		2SC2404	TRANSISTOR CHIP	2	(C,D)
Q8		2SA1022	TRANSISTOR CHIP	1	(B,C)
Q9		2SC2295	TRANSISTOR CHIP	1	(B,C)
Q10		2SA1022	TRANSISTOR CHIP	1	(B,C)
Q11		2SK374	TRANSISTOR	1	
Q12		2SB709	TRANSISTOR CHIP	1	(Q,R)
Q13		2SD601	TRANSISTOR CHIP	1	(Q,R)
Q14		2SB709	TRANSISTOR CHIP	1	(Q,R)
Q15		2SD601	TRANSISTOR CHIP	1	(Q,R)
Q16		2SB709	TRANSISTOR CHIP	1	(Q,R)
Q17,18		2SC2404	TRANSISTOR CHIP	2	(C,D)
Q19		2SA1022	TRANSISTOR CHIP	1	(B,C)
Q20		2SC2295	TRANSISTOR CHIP	1	(B,C)
Q21		2SA1022	TRANSISTOR CHIP	1	(B,C)
Q22		2SK374	TRANSISTOR	1	
Q23		2SB709	TRANSISTOR CHIP	1	(Q,R)
Q24		2SD601	TRANSISTOR CHIP	1	(Q,R)
Q25		2SA1022	TRANSISTOR CHIP	1	(B,C)
Q26-28		2SD601	TRANSISTOR CHIP	3	(Q,R)
Q200		2SD601	TRANSISTOR CHIP	1	(Q,R)
Q201,02		2SB709	TRANSISTOR CHIP	2	(Q,R)
Q203,04		2SD601	TRANSISTOR CHIP	2	(Q,R)
Q205,06		2SC2404	TRANSISTOR CHIP	2	(C,D)
Q207		2SA1022	TRANSISTOR CHIP	1	(B,C)
Q208		2SC2295	TRANSISTOR CHIP	1	(B,C)
Q209		2SD601	TRANSISTOR CHIP	1	(Q,R)
Q210		2SK198	TRANSISTOR	1	(Q,R)
Q211-15		2SD601	TRANSISTOR CHIP	5	(Q,R)
Q219		2SD601	TRANSISTOR CHIP	1	(Q,R)
Q220,21		2SB709	TRANSISTOR CHIP	2	(Q,R)
Q222		2SD601	TRANSISTOR CHIP	1	(Q,R)
Q223,24		2SC2404	TRANSISTOR CHIP	2	(C,D)
Q225		2SA1022	TRANSISTOR CHIP	1	(B,C)
Q226		2SC2295	TRANSISTOR CHIP	1	(B,C)
Q227		2SD601	TRANSISTOR CHIP	1	(Q,R)
Q229		2SB709	TRANSISTOR CHIP	1	(Q,R)
Q230		2SD601	TRANSISTOR CHIP	1	(Q,R)
Q232,33		2SB709	TRANSISTOR CHIP	2	(Q,R)
Q234		2SD601	TRANSISTOR CHIP	1	(Q,R)
Q235,36		2SC2404	TRANSISTOR CHIP	2	(C,D)
Q237		2SK198	TRANSISTOR	1	(Q,R)
Q238,39		2SB709	TRANSISTOR CHIP	2	(Q,R)
Q240		2SD601	TRANSISTOR CHIP	1	(Q,R)
Q241,42		2SC2404	TRANSISTOR CHIP	2	(C,D)
Q243		2SA1022	TRANSISTOR CHIP	1	(B,C)
Q244		2SC2295	TRANSISTOR CHIP	1	(B,C)
Q245		2SD601	TRANSISTOR CHIP	1	(Q,R)
Q246		2SK198	TRANSISTOR	1	(Q,R)
Q247		2SB709	TRANSISTOR CHIP	1	(Q,R)
Q248,49		2SD601	TRANSISTOR CHIP	2	(Q,R)
Q250,51		2SB709	TRANSISTOR CHIP	2	(Q,R)
Q252		2SD601	TRANSISTOR CHIP	1	(Q,R)
Q253,54		2SC2404	TRANSISTOR CHIP	2	(C,D)
Q255		2SK198	TRANSISTOR	1	(Q,R)
Q256		2SC2404	TRANSISTOR CHIP	1	(C,D)
Q257		2SB709	TRANSISTOR CHIP	1	(Q,R)
Q258		2SA1022	TRANSISTOR CHIP	1	(B,C)
Q259-63		2SC2295	TRANSISTOR CHIP	5	(B,C)

Refer to the P.C.BOARDS LIST, page 6-1-1, before using this page.

Ref.No.		Part No.	Part Name & Description	Pcs	Remarks
Q265		2SC2295	TRANSISTOR CHIP	1	(B,C)
Q266,67		2SD601	TRANSISTOR CHIP	2	(Q,R)
Q284		2SK198	TRANSISTOR	1	(Q,R)
Q285		2SC2295	TRANSISTOR CHIP	1	(B,C)
Q286,87		2SD601	TRANSISTOR CHIP	2	(Q,R)
Q288,89		2SB709	TRANSISTOR CHIP	2	(Q,R)
Q290		2SD601	TRANSISTOR CHIP	1	(Q,R)
Q291,92		2SB709	TRANSISTOR CHIP	2	(Q,R)
Q501,02		2SC2295	TRANSISTOR CHIP	2	(B,C)
Q503,04		2SD601	TRANSISTOR CHIP	2	(Q,R)
Q505		2SK198	TRANSISTOR	1	(Q,R)
Q506		2SB709	TRANSISTOR CHIP	1	(Q,R)
Q507-09		2SD601	TRANSISTOR CHIP	3	(Q,R)
Q514-16		2SD601	TRANSISTOR CHIP	3	(Q,R)
Q518		2SD601	TRANSISTOR CHIP	1	(Q,R)
Q519		2SC2295	TRANSISTOR CHIP	1	(B,C)
Q520		2SD601	TRANSISTOR CHIP	1	(Q,R)
Q521,22		2SC2295	TRANSISTOR CHIP	2	(B,C)
Q523		2SD601	TRANSISTOR CHIP	1	(Q,R)
Q524,25		2SB709	TRANSISTOR CHIP	2	(Q,R)
Q526,27		2SC2295	TRANSISTOR CHIP	2	(B,C)
Q528		2SD601	TRANSISTOR CHIP	1	(Q,R)
Q532		2SB709	TRANSISTOR CHIP	1	(Q,R)
Q533-37		2SD601	TRANSISTOR CHIP	5	(Q,R)
Q538		2SB709	TRANSISTOR CHIP	1	(Q,R)
Q539		2SD601	TRANSISTOR CHIP	1	(Q,R)
Q540		2SB709	TRANSISTOR CHIP	1	(Q,R)
Q541		2SD601	TRANSISTOR CHIP	1	(Q,R)
Q542		2SB709	TRANSISTOR CHIP	1	(Q,R)
Q543		2SD601	TRANSISTOR CHIP	1	(Q,R)
Q544		2SB709	TRANSISTOR CHIP	1	(Q,R)
Q545-48		2SD601	TRANSISTOR CHIP	4	(Q,R)
Q551,52		2SD601	TRANSISTOR CHIP	2	(Q,R)
			RESISTORS		
R1		ERJ6GEYG222	M.RESISTOR CH 1/10W 2.2K	1	
R2,R3		ERJ6GEYG220	M.RESISTOR CH 1/10W 22	2	
R4,R5		ERJ6GEYG152	M.RESISTOR CH 1/10W 1.5K	2	
R6,R7		VRE0034E561	M.RESISTOR CH 1/10W 560	2	
R8		ERJ6GEYG150	M.RESISTOR CH1/10W 15	1	
R9		ERJ6GEYG473	M.RESISTOR CH1/10W 47K	1	
R10		VRE0034E301	M.RESISTOR CH 1/10W 300	1	
R11		ERJ6GEYG220	M.RESISTOR CH 1/10W 22	1	
R12		ERJ6GEYG122	M.RESISTOR CH 1/10W 1.2K	1	
R13		ERJ6GEYG121	M.RESISTOR CH 1/10W 120	1	
R14		ERJ6GEYG680	M.RESISTOR CH 1/10W 68	1	
R15		ERJ6GEYG221	M.RESISTOR CH 1/10W 220	1	
R16		ERJ6GEYG683	M.RESISTOR CH 1/10W 68K	1	
R17		ERJ6GEYG332	M.RESISTOR CH 1/10W 3.3K	1	
R18		ERJ6GEYG151	M.RESISTOR CH 1/10W 150	1	
R19		ERJ6GEYG101	M.RESISTOR CH 1/10W 100	1	
R20		ERJ6GEYG472	M.RESISTOR CH1/10W 4.7K	1	
R21		ERJ6GEYG183	M.RESISTOR CH 1/10W 18K	1	
R22		ERJ6GEYG821	M.RESISTOR CH 1/10W 820	1	
R23,24		ERJ6GEYG102	M.RESISTOR CH 1/10W 1K	2	
R25,26		ERJ6GEYG101	M.RESISTOR CH 1/10W 100	2	
R27		ERJ6GEYG122	M.RESISTOR CH 1/10W 1.2K	1	
R28		ERJ6GEYG471	M.RESISTOR CH 1/10W 470	1	
R29		ERJ6GEYG222	M.RESISTOR CH 1/10W 2.2K	1	
R30		ERJ6GEYG272	M.RESISTOR CH 1/10W 2.7K	1	
R31		VRE0034E333	M.RESISTOR CH 1/10W 33K	1	
R32		VRE0034E103	M.RESISTOR CH 1/10W 10K	1	
R33		ERJ6GEYG222	M.RESISTOR CH 1/10W 2.2K	1	
R34		ERJ6GEYG223	M.RESISTOR CH 1/10W 22K	1	
R35		ERJ6GEYG562	M.RESISTOR CH 1/10W 5.6K	1	
R36,37		ERJ6GEYG332	M.RESISTOR CH 1/10W 3.3K	2	
R38		ERJ6GEYG823	M.RESISTOR CH 1/10W 82K	1	
R39		ERJ6GEYG332	M.RESISTOR CH 1/10W 3.3K	1	
R40		ERJ6GEYG222	M.RESISTOR CH 1/10W 2.2K	1	
R41		ERJ6GEYG563	M.RESISTOR CH 1/10W 56K	1	
R42		ERJ6GEYG333	M.RESISTOR CH1/10W 33K	1	
R43		ERJ6GEYG332	M.RESISTOR CH 1/10W 3.3K	1	
R44		ERJ6GEYG272	M.RESISTOR CH 1/10W 2.7K	1	

Ref.No.		Part No.	Part Name & Description	Pcs	Remarks
R45		ERJ6GEYG273	M.RESISTOR CH 1/10W 27K	1	
R46		ERJ6GEYG224	M.RESISTOR CH 1/10W 220K	1	
R47		ERJ6GEYG472	M.RESISTOR CH1/10W 4.7K	1	
R48		ERJ6GEYG272	M.RESISTOR CH 1/10W 2.7K	1	
R49		ERJ6GEYG221	M.RESISTOR CH 1/10W 220	1	
R50		ERJ6GEYG391	M.RESISTOR CH 1/10W 390	1	
R51		VRE0034E273	M.RESISTOR CH 1/10W 27K	1	
R52		VRE0034E203	M.RESISTOR CH 1/10W 20K	1	
R53		VRE0034E153	M.RESISTOR CH 1/10W 15K	1	
R54		ERJ6GEYG220	M.RESISTOR CH 1/10W 22	1	
R55		ERJ6GEYG222	M.RESISTOR CH 1/10W 2.2K	1	
R56		ERJ6GEYG332	M.RESISTOR CH 1/10W 3.3K	1	
R57		ERJ6GEYG222	M.RESISTOR CH 1/10W 2.2K	1	
R58,59		ERJ6GEYG220	M.RESISTOR CH 1/10W 22	2	
R60,61		ERJ6GEYG152	M.RESISTOR CH 1/10W 1.5K	2	
R62,63		VRE0034E561	M.RESISTOR CH 1/10W 560	2	
R64		ERJ6GEYG150	M.RESISTOR CH1/10W 15	1	
R65		VRE0034E301	M.RESISTOR CH 1/10W 300	1	
R66		ERJ6GEYG220	M.RESISTOR CH 1/10W 22	1	
R67		ERJ6GEYG222	M.RESISTOR CH 1/10W 2.2K	1	
R68		ERJ6GEYG102	M.RESISTOR CH 1/10W 1K	1	
R69		ERJ6GEYG471	M.RESISTOR CH 1/10W 470	1	
R70		ERJ6GEYG681	M.RESISTOR CH 1/10W 680	1	
R71		ERJ6GEYG101	M.RESISTOR CH 1/10W 100	1	
R72		ERJ6GEYG472	M.RESISTOR CH1/10W 4.7K	1	
R73		ERJ6GEYG183	M.RESISTOR CH 1/10W 18K	1	
R74		ERJ6GEYG102	M.RESISTOR CH 1/10W 1K	1	
R75		ERJ6GEYG101	M.RESISTOR CH 1/10W 100	1	
R76		ERJ6GEYG102	M.RESISTOR CH 1/10W 1K	1	
R77		ERJ6GEYG101	M.RESISTOR CH 1/10W 100	1	
R78		ERJ6GEYG122	M.RESISTOR CH 1/10W 1.2K	1	
R79		ERJ6GEYG471	M.RESISTOR CH 1/10W 470	1	
R80		ERJ6GEYG222	M.RESISTOR CH 1/10W 2.2K	1	
R81		ERJ6GEYG272	M.RESISTOR CH 1/10W 2.7K	1	
R82		ERJ6GEYG223	M.RESISTOR CH 1/10W 22K	1	
R83		ERJ6GEYG222	M.RESISTOR CH 1/10W 2.2K	1	
R84		ERJ6GEYG220	M.RESISTOR CH 1/10W 22	1	
R85		ERJ6GEYG562	M.RESISTOR CH 1/10W 5.6K	1	
R86,87		ERJ6GEYG332	M.RESISTOR CH 1/10W 3.3K	2	
R88		ERJ6GEYG823	M.RESISTOR CH 1/10W 82K	1	
R89		ERJ6GEYG332	M.RESISTOR CH 1/10W 3.3K	1	
R90		ERJ6GEYG222	M.RESISTOR CH 1/10W 2.2K	1	
R91		ERJ6GEYG563	M.RESISTOR CH 1/10W 56K	1	
R92		ERJ6GEYG333	M.RESISTOR CH1/10W 33K	1	
R93		ERJ6GEYG332	M.RESISTOR CH 1/10W 3.3K	1	
R94		ERJ6GEYG273	M.RESISTOR CH 1/10W 27K	1	
R95		ERJ6GEYG272	M.RESISTOR CH 1/10W 2.7K	1	
R96		ERJ6GEYG472	M.RESISTOR CH1/10W 4.7K	1	
R97		ERJ6GEYG224	M.RESISTOR CH 1/10W 220K	1	
R98		ERJ6GEYG272	M.RESISTOR CH 1/10W 2.7K	1	
R99		ERJ6GEYG221	M.RESISTOR CH 1/10W 220	1	
R100		ERJ6GEYG222	M.RESISTOR CH 1/10W 2.2K	1	
R101		ERJ6GEYG332	M.RESISTOR CH 1/10W 3.3K	1	
R102		ERJ6GEYG272	M.RESISTOR CH 1/10W 2.7K	1	
R103		VRE0034E223	M.RESISTOR CH 1/10W 22K	1	
R104		VRE0034E153	M.RESISTOR CH 1/10W 15K	1	
R105		ERJ6GEYG272	M.RESISTOR CH 1/10W 2.7K	1	
R109,10		ERJ6GEY0R00	M.RESISTOR CH 1/10W 0	2	
R133		ERJ6GEYG224	M.RESISTOR CH 1/10W 220K	1	
R135,36		ERJ6GEYG822	M.RESISTOR CH1/10W 8.2K	2	
R137		ERJ6GEYG222	M.RESISTOR CH 1/10W 2.2K	1	
R138		ERJ6GEYG102	M.RESISTOR CH 1/10W 1K	1	
R139		ERJ6GEYG222	M.RESISTOR CH 1/10W 2.2K	1	
R140		ERJ6GEYG104	M.RESISTOR CH 1/10W 100K	1	
R141		ERJ6GEYG470	M.RESISTOR CH 1/10W 47	1	
R142		ERJ6GEYG681	M.RESISTOR CH 1/10W 680	1	
R143,44		ERJ6GEYG301	M.RESISTOR CH 1/10W 300	2	
R145		ERJ6GEYG153	M.RESISTOR CH 1/10W 15K	1	
R146		ERJ6GEYG105	M.RESISTOR CH 1/10W 1M	1	
R148,49		ERJ6GEYG103	M.RESISTOR CH 1/10W 10K	2	
R150		ERJ6GEYG104	M.RESISTOR CH 1/10W 100K	1	
R151		ERJ6GEYG102	M.RESISTOR CH 1/10W 1K	1	
R152		ERJ6GEYG222	M.RESISTOR CH 1/10W 2.2K	1	
R153		ERJ6GEYG333	M.RESISTOR CH1/10W 33K	1	
R154		ERJ6GEYG104	M.RESISTOR CH 1/10W 100K	1	

Refer to the P.C.BOARDS LIST, page 6-1-1, before using this page.

Ref.No.		Part No.	Part Name & Description	Pcs	Remarks
R155		ERJ6GEYG332	M.RESISTOR CH 1/10W 3.3K	1	
R156		ERJ6GEYG472	M.RESISTOR CH1/10W 4.7K	1	
R157		ERJ6GEYG103	M.RESISTOR CH 1/10W 10K	1	
R158		ERJ6GEYG221	M.RESISTOR CH 1/10W 220	1	
R159		ERJ6GEYG681	M.RESISTOR CH 1/10W 680	1	
R160,61		ERJ6GEYG301	M.RESISTOR CH 1/10W 300	2	
R162,63		ERJ6GEYG103	M.RESISTOR CH 1/10W 10K	2	
R166,67		ERJ6GEYG102	M.RESISTOR CH 1/10W 1K	2	
R168		ERJ6GEYG470	M.RESISTOR CH 1/10W 47	1	
R169,70		ERJ6GEYG272	M.RESISTOR CH 1/10W 2.7K	2	
R171		ERJ6GEYG102	M.RESISTOR CH 1/10W 1K	1	
R172		ERJ6GEYG272	M.RESISTOR CH 1/10W 2.7K	1	
R173		ERJ6GEYG470	M.RESISTOR CH 1/10W 47	1	
R174		ERJ6GEY0R00	M.RESISTOR CH 1/10W 0	1	
R200		ERJ6GEYG272	M.RESISTOR CH 1/10W 2.7K	1	
R201		ERJ6GEYG222	M.RESISTOR CH 1/10W 2.2K	1	
R202,03		VRE0034E331	M.RESISTOR CH 1/10W 330	2	
R204		ERJ6GEYG470	M.RESISTOR CH 1/10W 47	1	
R205		ERJ6GEYG272	M.RESISTOR CH 1/10W 2.7K	1	
R206,07		VRE0034E102	M.RESISTOR CH 1/10W 1K	2	
R209		VRE0034E621	M.RESISTOR CH 1/10W 620	1	
R210,11		ERJ6GEYG272	M.RESISTOR CH 1/10W 2.7K	2	
R212		ERJ6GEYG102	M.RESISTOR CH 1/10W 1K	1	
R213		ERJ6GEYG221	M.RESISTOR CH 1/10W 220	1	
R214		ERJ6GEYG681	M.RESISTOR CH 1/10W 680	1	
R215		ERJ6GEYG101	M.RESISTOR CH 1/10W 100	1	
R216		ERJ6GEYG102	M.RESISTOR CH 1/10W 1K	1	
R217		ERJ6GEYG101	M.RESISTOR CH 1/10W 100	1	
R218		ERJ6GEYG102	M.RESISTOR CH 1/10W 1K	1	
R219		ERJ6GEYG152	M.RESISTOR CH 1/10W 1.5K	1	
R220		ERJ6GEYG222	M.RESISTOR CH 1/10W 2.2K	1	
R221		ERJ6GEYG471	M.RESISTOR CH 1/10W 470	1	
R222,23		ERJ6GEYG222	M.RESISTOR CH 1/10W 2.2K	2	
R224		ERJ6GEYG101	M.RESISTOR CH 1/10W 100	1	
R225		ERJ6GEYG683	M.RESISTOR CH 1/10W 68K	1	
R226		ERJ6GEYG272	M.RESISTOR CH 1/10W 2.7K	1	
R227,28		ERJ6GEYG103	M.RESISTOR CH 1/10W 10K	2	
R229		ERJ6GEYG102	M.RESISTOR CH 1/10W 1K	1	
R230		ERJ6GEYG222	M.RESISTOR CH 1/10W 2.2K	1	
R231		ERJ6GEYG470	M.RESISTOR CH 1/10W 47	1	
R233		ERJ6GEYG102	M.RESISTOR CH 1/10W 1K	1	
R234		ERJ6GEYG681	M.RESISTOR CH 1/10W 680	1	
R235		ERJ6GEYG561	M.RESISTOR CH1/10W 560	1	
R236		ERJ6GEYG121	M.RESISTOR CH 1/10W 120	1	
R237		ERJ6GEYG391	M.RESISTOR CH 1/10W 390	1	
R238		ERJ6GEYG473	M.RESISTOR CH1/10W 47K	1	
R240		ERJ6GEYG182	M.RESISTOR CH 1/10W 1.8K	1	
R241		ERJ6GEYG273	M.RESISTOR CH 1/10W 27K	1	
R242		ERJ6GEYG470	M.RESISTOR CH 1/10W 47	1	
R243		ERJ6GEYG182	M.RESISTOR CH 1/10W 1.8K	1	
R244		VRE0034E151	M.RESISTOR CH 1/10W 150	1	
R245		ERJ6GEYG152	M.RESISTOR CH 1/10W 1.5K	1	
R246		ERJ6GEYG331	M.RESISTOR CH 1/10W 330	1	
R257		VRE0034E331	M.RESISTOR CH 1/10W 330	1	
R258-60		VRE0034E301	M.RESISTOR CH 1/10W 300	3	
R262,63		VRE0034E102	M.RESISTOR CH 1/10W 1K	2	
R264		VRE0034E821	M.RESISTOR CH 1/10W 820	1	
R265,66		VRE0034E102	M.RESISTOR CH 1/10W 1K	2	
R268		VRE0034E471	M.RESISTOR CH 1/10W 470	1	
R269		ERJ6GEYG272	M.RESISTOR CH 1/10W 2.7K	1	
R270		ERJ6GEY0R00	M.RESISTOR CH 1/10W 0	1	
R271		ERJ6GEYG331	M.RESISTOR CH 1/10W 330	1	
R272		ERJ6GEYG272	M.RESISTOR CH 1/10W 2.7K	1	
R273		ERJ6GEYG102	M.RESISTOR CH 1/10W 1K	1	
R274		ERJ6GEYG101	M.RESISTOR CH 1/10W 100	1	
R275		ERJ6GEYG102	M.RESISTOR CH 1/10W 1K	1	
R276		ERJ6GEYG101	M.RESISTOR CH 1/10W 100	1	
R277		ERJ6GEYG152	M.RESISTOR CH 1/10W 1.5K	1	
R278		ERJ6GEYG471	M.RESISTOR CH 1/10W 470	1	
R279		ERJ6GEYG222	M.RESISTOR CH 1/10W 2.2K	1	
R280		ERJ6GEYG152	M.RESISTOR CH 1/10W 1.5K	1	
R281		ERJ6GEYG222	M.RESISTOR CH 1/10W 2.2K	1	
R282		ERJ6GEYG101	M.RESISTOR CH 1/10W 100	1	
R288		ERJ6GEYG102	M.RESISTOR CH 1/10W 1K	1	
R290		ERJ6GEYG470	M.RESISTOR CH 1/10W 47	1	
R291		ERJ6GEYG222	M.RESISTOR CH 1/10W 2.2K	1	
R292		ERJ6GEYG102	M.RESISTOR CH 1/10W 1K	1	
R293		ERJ6GEYG152	M.RESISTOR CH 1/10W 1.5K	1	
R294		ERJ6GEYG470	M.RESISTOR CH 1/10W 47	1	
R298		ERJ6GEYG470	M.RESISTOR CH 1/10W 47	1	
R299		ERJ6GEYG272	M.RESISTOR CH 1/10W 2.7K	1	
R300,01		VRE0034E102	M.RESISTOR CH 1/10W 1K	2	
R302		VRE0034E391	M.RESISTOR CH 1/10W 390	1	
R303		ERJ6GEYG272	M.RESISTOR CH 1/10W 2.7K	1	
R306		ERJ6GEYG683	M.RESISTOR CH 1/10W 68K	1	
R307		ERJ6GEYG821	M.RESISTOR CH 1/10W 820	1	
R308		ERJ6GEYG273	M.RESISTOR CH 1/10W 27K	1	
R309		ERJ6GEYG272	M.RESISTOR CH 1/10W 2.7K	1	
R310		ERJ6GEYG682	M.RESISTOR CH 1/10W 6.8K	1	
R311		ERJ6GEYG272	M.RESISTOR CH 1/10W 2.7K	1	
R312		ERJ6GEYG222	M.RESISTOR CH 1/10W 2.2K	1	
R313		ERJ6GEYG101	M.RESISTOR CH 1/10W 100	1	
R314		ERJ6GEYG683	M.RESISTOR CH 1/10W 68K	1	
R316-18		VRE0034E301	M.RESISTOR CH 1/10W 300	3	
R320,21		VRE0034E102	M.RESISTOR CH 1/10W 1K	2	
R322		VRE0034E821	M.RESISTOR CH 1/10W 820	1	
R323.34		VRE0034E102	M.RESISTOR CH 1/10W 1K	2	
R326		VRE0034E471	M.RESISTOR CH 1/10W 470	1	
R327		ERJ6GEYG272	M.RESISTOR CH 1/10W 2.7K	1	
R328		ERJ6GEYG152	M.RESISTOR CH 1/10W 1.5K	1	
R329		ERJ6GEY0R00	M.RESISTOR CH 1/10W 0	1	
R330		ERJ6GEYG331	M.RESISTOR CH 1/10W 330	1	
R331		ERJ6GEYG102	M.RESISTOR CH 1/10W 1K	1	
R332		ERJ6GEYG101	M.RESISTOR CH 1/10W 100	1	
R333		ERJ6GEYG102	M.RESISTOR CH 1/10W 1K	1	
R334		ERJ6GEYG101	M.RESISTOR CH 1/10W 100	1	
R335		ERJ6GEYG152	M.RESISTOR CH 1/10W 1.5K	1	
R336		ERJ6GEYG471	M.RESISTOR CH 1/10W 470	1	
R337		ERJ6GEYG222	M.RESISTOR CH 1/10W 2.2K	1	
R338,39		ERJ6GEYG152	M.RESISTOR CH 1/10W 1.5K	2	
R340		ERJ6GEYG101	M.RESISTOR CH 1/10W 100	1	
RR342		ERJ6GEYG683	M.RESISTOR CH 1/10W 68K	1	
R346		ERJ6GEYG102	M.RESISTOR CH 1/10W 1K	1	
R347		ERJ6GEYG470	M.RESISTOR CH 1/10W 47	1	
R348		ERJ6GEYG222	M.RESISTOR CH 1/10W 2.2K	1	
R349		ERJ6GEYG470	M.RESISTOR CH 1/10W 47	1	
R350		ERJ6GEYG152	M.RESISTOR CH 1/10W 1.5K	1	
R351		ERJ6GEYG391	M.RESISTOR CH 1/10W 390	1	
R355		ERJ6GEYG470	M.RESISTOR CH 1/10W 47	1	
R356		ERJ6GEYG222	M.RESISTOR CH 1/10W 2.2K	1	
R357,58		VRE0034E102	M.RESISTOR CH 1/10W 1K	2	
R359		VRE0034E271	M.RESISTOR CH 1/10W 270	1	
R360		ERJ6GEYG272	M.RESISTOR CH 1/10W 2.7K	1	
R364		ERJ6GEYG561	M.RESISTOR CH 1/10W 560	1	
R365		ERJ6GEYG273	M.RESISTOR CH 1/10W 27K	1	
R366		ERJ6GEYG272	M.RESISTOR CH 1/10W 2.7K	1	
R367		ERJ6GEYG682	M.RESISTOR CH 1/10W 6.8K	1	
R368		ERJ6GEYG272	M.RESISTOR CH 1/10W 2.7K	1	
R369		ERJ6GEYG222	M.RESISTOR CH 1/10W 2.2K	1	
R370		ERJ6GEYG101	M.RESISTOR CH 1/10W 100	1	
R371		ERJ6GEYG683	M.RESISTOR CH 1/10W 68K	1	
R372		ERJ6GEYG332	M.RESISTOR CH 1/10W 3.3K	1	
R373		ERJ6GEYG562	M.RESISTOR CH 1/10W 5.6K	1	
R374,75		ERJ6GEYG223	M.RESISTOR CH 1/10W 22K	2	
R376		ERJ6GEYG332	M.RESISTOR CH 1/10W 3.3K	1	
R396		ERJ6GEYG332	M.RESISTOR CH 1/10W 3.3K	1	
R397		ERJ6GEYG472	M.RESISTOR CH1/10W 4.7K	1	
R398		ERJ6GEYG153	M.RESISTOR CH 1/10W 15K	1	
R399		ERJ6GEYG221	M.RESISTOR CH 1/10W 220	1	
R400		ERJ6GEYG472	M.RESISTOR CH1/10W 4.7K	1	
R401,02		ERJ6GEYG102	M.RESISTOR CH 1/10W 1K	2	
R404		ERJ6GEYG102	M.RESISTOR CH 1/10W 1K	1	
R405,06		ERJ6GEYG221	M.RESISTOR CH 1/10W 220	2	
R409		VRE0034E331	M.RESISTOR CH 1/10W 330	1	
R410		ERJ6GEYG390	M.RESISTOR CH 1/10W 39	1	
R411		ERJ6GEYG221	M.RESISTOR CH 1/10W 220	1	
R412		VRE0034E391	M.RESISTOR CH 1/10W 390	1	
R413-16		ERJ6GEYG223	M.RESISTOR CH 1/10W 22K	4	
R417		VRE0034E391	M.RESISTOR CH 1/10W 390	1	
R418		ERJ6GEYG151	M.RESISTOR CH 1/10W 150	1	

Refer to the P.C.BOARDS LIST, page 6-1-1, before using this page.

Ref.No.		Part No.	Part Name & Description	Pcs	Remarks
R421		ERJ6GEYG221	M.RESISTOR CH 1/10W 220	1	
R422		VRE0034E391	M.RESISTOR CH 1/10W 390	1	
R423		ERJ6GEY0R00	M.RESISTOR CH 1/10W 0	1	
R424		ERJ6GEYG101	M.RESISTOR CH 1/10W 100	1	
R425,26		ERJ6GEYG470	M.RESISTOR CH 1/10W 47	2	
R427		ERJ6GEYG221	M.RESISTOR CH 1/10W 220	1	
R428		VRE0034E391	M.RESISTOR CH 1/10W 390	1	
R429		ERJ6GEYG392	M.RESISTOR CH 1/10W 3.9K	1	
R430		ERJ6GEYG102	M.RESISTOR CH 1/10W 1K	1	
R431		VRE0034E821	M.RESISTOR CH 1/10W 820	1	
R432,33		ERJ6GEYG102	M.RESISTOR CH 1/10W 1K	2	
R434		ERJ6GEYG123	M.RESISTOR CH1/10W 12K	1	
R435		ERJ6GEYG682	M.REISITOR CH 1/10W 6.8K	1	
R436		ERJ6GEYG822	M.RESISTOR CH1/10W 8.2K	1	
R437		ERJ6GEYG123	M.RESISTOR CH1/10W 12K	1	
R438		ERJ6GEYG152	M.RESISTOR CH 1/10W 1.5K	1	
R439		ERJ6GEYG102	M.RESISTOR CH 1/10W 1K	1	
R440		VRE0034E821	M.RESISTOR CH 1/10W 820	1	
R441		ERJ6GEYG102	M.RESISTOR CH 1/10W 1K	1	
R442		ERJ6GEYG222	M.RESISTOR CH 1/10W 2.2K	1	
R443		ERJ6GEY0R00	M.RESISTOR CH 1/10W 0	1	
R501		ERJ6GEYG102	M.RESISTOR CH 1/10W 1K	1	
R502		ERJ6GEYG330	M.RESISTOR CH 1/10W 33	1	
R503,04		ERJ6GEYG222	M.RESISTOR CH 1/10W 2.2K	2	
R505,06		ERJ6GEYG102	M.RESISTOR CH 1/10W 1K	2	
R507		ERJ6GEYG331	M.RESISTOR CH 1/10W 330	1	
R508		ERJ6GEYG221	M.RESISTOR CH 1/10W 220	1	
R509		ERJ6GEYG152	M.RESISTOR CH 1/10W 1.5K	1	
R510		ERJ6GEYG391	M.RESISTOR CH 1/10W 390	1	
R511		ERJ6GEYG102	M.RESISTOR CH 1/10W 1K	1	
R512		ERJ6GEYG152	M.RESISTOR CH 1/10W 1.5K	1	
R513		ERJ6GEYG683	M.RESISTOR CH 1/10W 68K	1	
R514		ERJ6GEYG182	M.RESISTOR CH 1/10W 1.8K	1	
R515		ERJ6GEYG101	M.RESISTOR CH 1/10W 100	1	
R516		ERJ6GEYG152	M.RESISTOR CH 1/10W 1.5K	1	
R517		ERJ6GEYG470	M.RESISTOR CH 1/10W 47	1	
R518		ERJ6GEYG273	M.RESISTOR CH 1/10W 27K	1	
R519		ERJ6GEYG331	M.RESISTOR CH 1/10W 330	1	
R520		ERJ6GEYG681	M.RESISTOR CH 1/10W 680	1	
R521		ERJ6GEYG391	M.RESISTOR CH 1/10W 390	1	
R522		ERJ6GEYG102	M.RESISTOR CH 1/10W 1K	1	
R523		ERJ6GEYG681	M.RESISTOR CH 1/10W 680	1	
R524		ERJ6GEYG561	M.RESISTOR CH1/10W 560	1	
R525		ERJ6GEYG182	M.RESISTOR CH 1/10W 1.8K	1	
R526		ERJ6GEYG470	M.RESISTOR CH 1/10W 47	1	
R527		ERJ6GEYG182	M.RESISTOR CH 1/10W 1.8K	1	
R528		VRE0034E151	M.RESISTOR CH 1/10W 150	1	
R529		ERJ6GEYG152	M.RESISTOR CH 1/10W 1.5K	1	
R530		ERJ6GEYG470	M.RESISTOR CH 1/10W 47	1	
R542		ERJ6GEYG821	M.RESISTOR CH 1/10W 820	1	
R543		ERJ6GEYG392	M.RESISTOR CH 1/10W 3.9K	1	
R544		ERJ6GEYG561	M.RESISTOR CH1/10W 560	1	
R545		ERJ6GEYG391	M.RESISTOR CH 1/10W 390	1	
R546		ERJ6GEYG561	M.RESISTOR CH1/10W 560	1	
R547		ERJ6GEYG391	M.RESISTOR CH 1/10W 390	1	
R549		ERJ6GEYG273	M.RESISTOR CH 1/10W 27K	1	
R551		ERJ6GEYG391	M.RESISTOR CH 1/10W 390	1	
R552		ERJ6GEYG102	M.RESISTOR CH 1/10W 1K	1	
R553		ERJ6GEYG681	M.RESISTOR CH 1/10W 680	1	
R554		ERJ6GEYG561	M.RESISTOR CH1/10W 560	1	
R555		ERJ6GEYG182	M.RESISTOR CH 1/10W 1.8K	1	
R556		ERJ6GEYG470	M.RESISTOR CH 1/10W 47	1	
R557		ERJ6GEYG182	M.RESISTOR CH 1/10W 1.8K	1	
R558		VRE0034E151	M.RESISTOR CH 1/10W 150	1	
R559		ERJ6GEYG152	M.RESISTOR CH 1/10W 1.5K	1	
R560		ERJ6GEYG470	M.RESISTOR CH 1/10W 47	1	
R564		ERJ6GEYG102	M.RESISTOR CH 1/10W 1K	1	
R565		ERJ6GEYG222	M.RESISTOR CH 1/10W 2.2K	1	
R566		ERJ6GEYG122	M.RESISTOR CH 1/10W 1.2K	1	
R567		ERJ6GEYG221	M.RESISTOR CH 1/10W 220	1	
R568		ERJ6GEYG470	M.RESISTOR CH 1/10W 47	1	
R569		ERJ6GEYG153	M.RESISTOR CH 1/10W 15K	1	
R570		ERJ6GEYG223	M.RESISTOR CH 1/10W 22K	1	
R571		ERJ6GEYG470	M.RESISTOR CH 1/10W 47	1	
R572		ERJ6GEYG472	M.RESISTOR CH1/10W 4.7K	1	

Ref.No.		Part No.	Part Name & Description	Pcs	Remarks
R573,74		ERJ6GEYG102	M.RESISTOR CH 1/10W 1K	2	
R576		ERJ6GEYG103	M.RESISTOR CH 1/10W 10K	1	
R577		ERJ6GEYG102	M.RESISTOR CH 1/10W 1K	1	
R578		ERJ6GEYG472	M.RESISTOR CH1/10W 4.7K	1	
R579,80		ERJ6GEYG121	M.RESISTOR CH 1/10W 120	2	
R581,82		ERJ6GEYG821	M.RESISTOR CH 1/10W 820	2	
R583		ERJ6GEYG470	M.RESISTOR CH 1/10W 47	1	
R584		ERJ6GEYG153	M.RESISTOR CH 1/10W 15K	1	
R585		ERJ6GEYG223	M.RESISTOR CH 1/10W 22K	1	
R586		ERJ6GEYG470	M.RESISTOR CH 1/10W 47	1	
R587		ERJ6GEYG472	M.RESISTOR CH1/10W 4.7K	1	
R588		ERJ6GEYG102	M.RESISTOR CH 1/10W 1K	1	
R590		ERJ6GEYG103	M.RESISTOR CH 1/10W 10K	1	
R591		ERJ6GEYG102	M.RESISTOR CH 1/10W 1K	1	
R592		ERJ6GEYG472	M.RESISTOR CH1/10W 4.7K	1	
R593,94		ERJ6GEYG121	M.RESISTOR CH 1/10W 120	2	
R595,96		ERJ6GEYG821	M.RESISTOR CH 1/10W 820	2	
R597		ERJ6GEYG102	M.RESISTOR CH 1/10W 1K	1	
R598		ERJ6GEYG103	M.RESISTOR CH 1/10W 10K	1	
R599		ERJ6GEYG822	M.RESISTOR CH1/10W 8.2K	1	
R600		ERJ6GEYG102	M.RESISTOR CH 1/10W 1K	1	
R601,02		VRE0034E301	M.RESISTOR CH 1/10W 300	2	
R603		ERJ6GEYG152	M.RESISTOR CH 1/10W 1.5K	1	
R604		ERJ6GEYG151	M.RESISTOR CH 1/10W 150	1	
R605		ERJ6GEYG102	M.RESISTOR CH 1/10W 1K	1	
R606		ERJ6GEYG182	M.RESISTOR CH 1/10W 1.8K	1	
R607		ERJ6GEYG332	M.RESISTOR CH 1/10W 3.3K	1	
R608		ERJ6GEYG470	M.RESISTOR CH 1/10W 47	1	
R609,10		ERJ6GEYG122	M.RESISTOR CH 1/10W 1.2K	2	
R611		ERJ6GEY0R00	M.RESISTOR CH 1/10W 0	1	
R612		ERJ6GEYG272	M.RESISTOR CH 1/10W 2.7K	1	
R613		ERJ6GEYG182	M.RESISTOR CH 1/10W 1.8K	1	
R614		ERJ6GEYG392	M.RESISTOR CH 1/10W 3.9K	1	
R615		ERJ6GEYG151	M.RESISTOR CH 1/10W 150	1	
R616		ERJ6GEYG222	M.RESISTOR CH 1/10W 2.2K	1	
R617		ERJ6GEYG330	M.RESISTOR CH 1/10W 33	1	
R618		ERJ6GEYG222	M.RESISTOR CH 1/10W 2.2K	1	
R619		ERJ6GEYG102	M.RESISTOR CH 1/10W 1K	1	
R620		ERJ6GEYG151	M.RESISTOR CH 1/10W 150	1	
R621		ERJ6GEYG821	M.RESISTOR CH 1/10W 820	1	
R622		ERJ6GEYG152	M.RESISTOR CH 1/10W 1.5K	1	
R623		ERJ6GEYG470	M.RESISTOR CH 1/10W 47	1	
R630		ERJ6GEYG272	M.RESISTOR CH 1/10W 2.7K	1	
R632		ERJ6GEY0R00	M.RESISTOR CH 1/10W 0	1	
R634		ERJ6GEYG683	M.RESISTOR CH 1/10W 68K	1	
R635		ERJ6GEYG104	M.RESISTOR CH 1/10W 100K	1	
R636		ERJ6GEYG562	M.RESISTOR CH 1/10W 5.6K	1	
R637		ERJ6GEYG183	M.RESISTOR CH 1/10W 18K	1	
R642		ERJ6GEYG332	M.RESISTOR CH 1/10W 3.3K	1	
R643		ERJ6GEYG101	M.RESISTOR CH 1/10W 100	1	
R644		ERJ6GEYG183	M.RESISTOR CH 1/10W 18K	1	
R645		ERJ6GEYG182	M.RESISTOR CH 1/10W 1.8K	1	
R646		ERJ6GEYG681	M.RESISTOR CH 1/10W 680	1	
R647		ERJ6GEYG471	M.RESISTOR CH 1/10W 470	1	
R648,49		ERJ6GEYG473	M.RESISTOR CH1/10W 47K	2	
R650		ERJ6GEYG221	M.RESISTOR CH 1/10W 220	1	
R651		ERJ6GEYG682	M.REISITOR CH 1/10W 6.8K	1	
R652		ERJ6GEYG182	M.RESISTOR CH 1/10W 1.8K	1	
R653		ERJ6GEYG102	M.RESISTOR CH 1/10W 1K	1	
R654,55		ERJ6GEYG101	M.RESISTOR CH 1/10W 100	2	
R656		ERJ6GEYG122	M.RESISTOR CH 1/10W 1.2K	1	
R657		ERJ6GEYG182	M.RESISTOR CH 1/10W 1.8K	1	
R658		ERJ6GEYG102	M.RESISTOR CH 1/10W 1K	1	
R659		ERJ6GEYG681	M.RESISTOR CH 1/10W 680	1	
R660		ERJ6GEYG102	M.RESISTOR CH 1/10W 1K	1	
R661		ERJ6GEYG222	M.RESISTOR CH 1/10W 2.2K	1	
R662		ERJ6GEYG182	M.RESISTOR CH 1/10W 1.8K	1	
R663		ERJ6GEYG222	M.RESISTOR CH 1/10W 2.2K	1	
R664		ERJ6GEYG682	M.REISITOR CH 1/10W 6.8K	1	
R665		ERJ6GEYG122	M.RESISTOR CH 1/10W 1.2K	1	
R666		ERJ6GEYG102	M.RESISTOR CH 1/10W 1K	1	
R667		ERJ6GEYG182	M.RESISTOR CH 1/10W 1.8K	1	
R668		ERJ6GEYG102	M.RESISTOR CH 1/10W 1K	1	
R669		ERJ6GEYG681	M.RESISTOR CH 1/10W 680	1	
R670		ERJ6GEYG331	M.RESISTOR CH 1/10W 330	1	

Refer to the P.C.BOARDS LIST, page 6-1-1, before using this page.

Ref.No.		Part No.	Part Name & Description	Pcs	Remarks
R671		ERJ6GEYG152	M.RESISTOR CH 1/10W 1.5K	1	
R672,73		ERJ6GEYG102	M.RESISTOR CH 1/10W 1K	2	
R674		ERJ6GEYG561	M.RESISTOR CH1/10W 560	1	
R675		ERJ6GEYJ271	M.RESISTOR CH 1/10W 270	1	
R676		ERJ6GEYG152	M.RESISTOR CH 1/10W 1.5K	1	
R677		ERJ6GEYG102	M.RESISTOR CH 1/10W 1K	1	
R678		ERJ6GEYG152	M.RESISTOR CH 1/10W 1.5K	1	
R679		ERJ6GEYG102	M.RESISTOR CH 1/10W 1K	1	
R680		ERJ6GEYG561	M.RESISTOR CH1/10W 560	1	
R681		ERJ6GEYG330	M.RESISTOR CH 1/10W 33	1	
R682		ERJ6GEYG681	M.RESISTOR CH 1/10W 680	1	
R683		ERJ6GEYG124	M.RESISTOR CH1/10W 120K	1	
R684		ERJ6GEYG152	M.RESISTOR CH 1/10W 1.5K	1	
R685		ERJ6GEYG102	M.RESISTOR CH 1/10W 1K	1	
R686		ERJ6GEYG181	M.RESISTOR CH 1/10W 180	1	
R687		ERJ6GEYG102	M.RESISTOR CH 1/10W 1K	1	
R688		ERJ6GEYG561	M.RESISTOR CH1/10W 560	1	
R689		ERJ6GEYG152	M.RESISTOR CH 1/10W 1.5K	1	
R690,91		ERJ6GEYG122	M.RESISTOR CH 1/10W 1.2K	2	
R692,93		ERJ6GEYG470	M.RESISTOR CH 1/10W 47	2	
R694,95		ERJ6GEYG102	M.RESISTOR CH 1/10W 1K	2	
R696,97		ERJ6GEYG122	M.RESISTOR CH 1/10W 1.2K	2	
R698,99		ERJ6GEYG470	M.RESISTOR CH 1/10W 47	2	
R700,01		ERJ6GEYG102	M.RESISTOR CH 1/10W 1K	2	
R708		ERJ6GEY0R00	M.RESISTOR CH 1/10W 0	1	
R710		ERJ6GEY0R00	M.RESISTOR CH 1/10W 0	1	
R712,13		ERJ6GEY0R00	M.RESISTOR CH 1/10W 0	2	
R716		ERJ6GEYG101	M.RESISTOR CH 1/10W 100	1	
R717		ERJ6GEYG681	M.RESISTOR CH 1/10W 680	1	
R718		ERJ6GEYG154	M.RESISTOR CH 1/10W 150K	1	
R719		ERJ6GEYG102	M.RESISTOR CH 1/10W 1K	1	
R720		ERJ6GEYG681	M.RESISTOR CH 1/10W 680	1	
R721		ERJ6GEYG470	M.RESISTOR CH 1/10W 47	1	
R722		ERJ6GEYG182	M.RESISTOR CH 1/10W 1.8K	1	
R723		VRE0034E151	M.RESISTOR CH 1/10W 150	1	
R724		ERJ6GEYG152	M.RESISTOR CH 1/10W 1.5K	1	
R725		ERJ6GEYG470	M.RESISTOR CH 1/10W 47	1	
R726		ERJ6GEYG472	M.RESISTOR CH1/10W 4.7K	1	
R727		ERJ6GEYG103	M.RESISTOR CH 1/10W 10K	1	
R728		ERJ6GEYG561	M.RESISTOR CH1/10W 560	1	
R729		ERJ6GEYG391	M.RESISTOR CH 1/10W 390	1	
R730		ERJ6GEYG561	M.RESISTOR CH1/10W 560	1	
R731		ERJ6GEYG391	M.RESISTOR CH 1/10W 390	1	
R732		ERJ6GEYG561	M.RESISTOR CH1/10W 560	1	
R733		ERJ6GEYG391	M.RESISTOR CH 1/10W 390	1	
R734		ERJ6GEYG561	M.RESISTOR CH1/10W 560	1	
R735		ERJ6GEYG391	M.RESISTOR CH 1/10W 390	1	
R736		ERJ6GEYG101	M.RESISTOR CH 1/10W 100	1	
R737		ERJ6GEYG472	M.RESISTOR CH1/10W 4.7K	1	
R738		ERJ6GEYG822	M.RESISTOR CH1/10W 8.2K	1	
R741		ERJ6GEYG105	M.RESISTOR CH 1/10W 1M	1	
R742		ERJ6GEYG122	M.RESISTOR CH 1/10W 1.2K	1	
R743		ERJ6GEYG472	M.RESISTOR CH1/10W 4.7K	1	
R744		ERJ6GEY0R00	M.RESISTOR CH 1/10W 0	1	
R883		ERJ6GEYG103	M.RESISTOR CH 1/10W 10K	1	
R923		ERJ6GEYG272	M.RESISTOR CH 1/10W 2.7K	1	
R924		ERJ6GEYG822	M.RESISTOR CH1/10W 8.2K	1	
R1001		ERJ6GEYG681	M.RESISTOR CH 1/10W 680	1	
R1002		ERJ6GEYG621	M.RESISTOR CH 1/10W 620	1	
SW200		VSS0126	SWITCH	1	
SW201		VSS0207	SWITCH	1	
SW202,03		VJP1990	CONNECTOR	2	
TH501-04		ERTD2FGL102S	THERMISTOR	4	
TP1-P4		VJR0582	PACK PIN	4	
TP6,P7		VJR0582	PACK PIN	2	
TP201-04		VJR0582	PACK PIN	4	

Ref.No.		Part No.	Part Name & Description	Pcs	Remarks
TP206,07		VJR0582	PACK PIN	2	
TP501-03		VJR0582	PACK PIN	3	
TP505-07		VJR0582	PACK PIN	3	
TPG1,G2		VJR0582	PACK PIN	2	
TPG201		VJR0582	PACK PIN	1	
TPG501		VJR0582	PACK PIN	1	
VC201		ECV1ZW20X60	V.CAPACITOR 20P	1	
VC501		ECV1ZW30X53	V.CAPACITOR 30P	1	
VR1		VRV0109B201	V.RESISTOR 200	1	
VR2		VRV0109B502	V.RESISTOR 5K	1	
VR3		VRV0109B501	V.RESISTOR 500	1	
VR4		VRV0109B502	V.RESISTOR 5K	1	
VR200		VRV0064B501	V.RESISTOR 500	1	
VR201		VRV0110B503	V.RESISTOR 50K	1	
VR202		VRV0064B103	V.RESISTOR 10K	1	
VR203		VRV0109B501	V.RESISTOR 500	1	
VR205		VRV0109B501	V.RESISTOR 500	1	
VR207		VRV0109B201	V.RESISTOR 200	1	
VR208,09		VRV0109B501	V.RESISTOR 500	2	
VR210-13		VRV0109B102	V.RESISTOR 1K	4	
VR501		VRV0109B501	V.RESISTOR 500	1	
VR502		VRV0109B503	V.RESISTOR 50K	1	
VR503-06		VRV0110B503	V.RESISTOR 50K	4	
VR507		VRV0109B201	V.RESISTOR 200	1	
VR508,09		VRV0109B101	V.RESISTOR 100	2	
VR510		VRV0109B203	V.RESISTOR 20K	1	
VR511		VRV0109B502	V.RESISTOR 5K	1	
VR512		VRV0110B503	V.RESISTOR 50K	1	
VR513,14		VRV0109B102	V.RESISTOR 1K	2	
VR515,16		VRV0109B501	V.RESISTOR 500	2	
VR517		VRV0110B503	V.RESISTOR 50K	1	
			MISCELLANEOUS		
		VML2143	CARD PULLER	1	
		VML2144	CARD PULLER	1	
		VMS4174	PIN	6	
		VMZ1547	BARRIER	1	
		VSC3056	SHIELD CASE	1	
		VXA3966	P.C.B. SHIELD PLATE	1	
		XNG26E	NUT	4	
		XYNV3+K6FR	SCREW	6	
		XYN26+C12	SCREW	4	

Refer to the P.C.BOARDS LIST, page 6-1-1, before using this page.

Ref.No.		Part No.	Part Name & Description	Pcs	Remarks
	■	VEP88063C	P.C.BOARD W/COMPONENT		
			W2 ENCODER		
	■	VEP80632A	P.C.BOARD W/COMPONENT		ON VEP88063C
			W2S SC SUB		
			CAPACITORS		
C1		ECUM1H103KBN	C.CAPACITOR CH 50V 0.01U	1	
C2		ECEA1CU221	E.CAPACITOR 16V 220U	1	
C3		ECUM1H103KBN	C.CAPACITOR CH 50V 0.01U	1	
C4		ECEA0JU101	E.CAPACITOR 6.3V 100U	1	
C5		ECUM1H103KBN	C.CAPACITOR CH 50V 0.01U	1	
C6		ECEA1CU221	E.CAPACITOR 16V 220U	1	
C7-C9		ECUM1H103KBN	C.CAPACITOR CH 50V 0.01U	3	
C10		ECUM1H103KBN	C.CAPACITOR CH 50V 0.01U	1	
C11		ECEA1AU101	E.CAPACITOR 10V 100U	1	
C12,13		ECUM1H103KBN	C.CAPACITOR CH 50V 0.01U	2	
C14		ECEA1AU101	E.CAPACITOR 10V 100U	1	
C15		ECUM1H470JCN	C.CAPACITOR CH 50V 47P	1	
C16		ECUM1H103KBN	C.CAPACITOR CH 50V 0.01U	1	
C17		ECUM1H330JCN	C.CAPACITOR CH 50V 33P	1	
C18		ECUM1H103KBN	C.CAPACITOR CH 50V 0.01U	1	
C19,20		ECEA1CU221	E.CAPACITOR 16V 220U	2	
C21,22		ECUM1H103KBN	C.CAPACITOR CH 50V 0.01U	2	
C23		ECUM1H470JCN	C.CAPACITOR CH 50V 47P	1	
C24,25		ECUM1H151JCN	C.CAPACITOR CH 50V 150P	2	
C26		ECUM1E104ZFN	C.CAPACITOR CH 25V 0.1U	1	
C27		ECUM1H270JCN	C.CAPACITOR CH 50V 27P	1	
C28		ECQM1H183JF	P.CAPACITOR 50V 0.018U	1	
C29		ECUM1H103KBN	C.CAPACITOR CH 50V 0.01U	1	
C30		ECEA1EN4R7S	E.CAPACITOR 25V 4.7U	1	
C31		ECEA1HN2R2S	E.CAPACITOR 50V 2.2U	1	
C32		ECUM1H103KBN	C.CAPACITOR CH 50V 0.01U	1	
C33		ECEA0JU101	E.CAPACITOR 6.3V 100U	1	
C35		ECEA0JU221	E.CAPACITOR 6.3V 220U	1	
C36		ECUM1H103KBN	C.CAPACITOR CH 50V 0.01U	1	
C37		ECEA0JU221	E.CAPACITOR 6.3V 220U	1	
C38-46		ECUM1H103KBN	C.CAPACITOR CH 50V 0.01U	9	
C49,50		ECUM1H103KBN	C.CAPACITOR CH 50V 0.01U	2	
C51		ECEA1AU101	E.CAPACITOR 10V 100U	1	
C52		ECUM1E104ZFN	C.CAPACITOR CH 25V 0.1U	1	
C53		ECUM1H103KBN	C.CAPACITOR CH 50V 0.01U	1	
C54		ECEA1AU101	E.CAPACITOR 10V 100U	1	
C55		ECUM1H220JCN	C.CAPACITOR CH 50V 22P	1	
C56		ECUM1H103KBN	C.CAPACITOR CH 50V 0.01U	1	
C57		ECUM1H150JCN	C.CAPACITOR CH 50V 15P	1	
C58		ECUM1H103KBN	C.CAPACITOR CH 50V 0.01U	1	
C59		ECEA0JU101	E.CAPACITOR 6.3V 100U	1	
C60		ECUM1H120JCN	C.CAPACITOR CH 50V 12P	1	
C61		ECEA0JU221	E.CAPACITOR 6.3V 220U	1	
C62		ECUM1H103KBN	C.CAPACITOR CH 50V 0.01U	1	
C63		ECEA0JU221	E.CAPACITOR 6.3V 220U	1	
C64-73		ECUM1H103KBN	C.CAPACITOR CH 50V 0.01U	10	
C76		ECUM1H270JCN	C.CAPACITOR CH 50V 27P	1	
C77		ECUM1E104ZFN	C.CAPACITOR CH 25V 0.1U	1	
C78		ECQM1H223JF	P.CAPACITOR 50V 0.022U	1	
C79		ECUM1H103KBN	C.CAPACITOR CH 50V 0.01U	1	
C80,81		ECEA1HN2R2S	E.CAPACITOR 50V 2.2U	2	
C82,83		ECUM1E104ZFN	C.CAPACITOR CH 25V 0.1U	2	
C84		ECEA0JU470	E.CAPACITOR 6.3V 47U	1	
C85,86		ECUM1E104ZFN	C.CAPACITOR CH 25V 0.1U	2	
C87		ECUM1H103KBN	C.CAPACITOR CH 50V 0.01U	1	
C88		ECUM1E104ZFN	C.CAPACITOR CH 25V 0.1U	1	
C113		ECUM1E104ZFN	C.CAPACITOR CH 25V 0.1U	1	
C114-17		ECUM1H103KBN	C.CAPACITOR CH 50V 0.01U	4	
C120		ECUM1H103KBN	C.CAPACITOR CH 50V 0.01U	1	
C121		ECEA1AU470	E.CAPACITOR 10V 47U	1	
C122		ECUM1H103KBN	C.CAPACITOR CH 50V 0.01U	1	
C123		ECUM1C104KBN	C.CAPACITOR CH 16V 0.1U	1	
C124		ECUM1H181JCN	C.CAPACITOR CH 50V 180P	1	
C125		ECUM1E104ZFN	C.CAPACITOR CH 25V 0.1U	1	

Ref.No.		Part No.	Part Name & Description	Pcs	Remarks
C126		ECUM1C104KBN	C.CAPACITOR CH 16V 0.1U	1	
C127		ECUM1H180JCN	C.CAPACITOR CH 50V 18P	1	
C128		ECUM1H680JCN	C.CAPACITOR CH 50V 68P	1	
C129,30		ECUM1C104KBN	C.CAPACITOR CH 16V 0.1U	2	
C131		ECEA1HN010S	E.CAPACITOR 50V 1U	1	
C132		ECUM1H103KBN	C.CAPACITOR CH 50V 0.01U	1	
C133		ECEA1AU470	E.CAPACITOR 10V 47U	1	
C134		ECUM1E104ZFN	C.CAPACITOR CH 25V 0.1U	1	
C135		ECUM1H391JCN	C.CAPACITOR CH 50V 390P	1	
C136		ECUM1H151JCN	C.CAPACITOR CH 50V 150P	1	
C137		ECUM1H121JCN	C.CAPACITOR CH 50V 120P	1	
C138		ECUM1H391JCN	C.CAPACITOR CH 50V 390P	1	
C139-41		ECUM1H103KBN	C.CAPACITOR CH 50V 0.01U	3	
C142		ECEA1AU470	E.CAPACITOR 10V 47U	1	
C143,44		ECUM1C104KBN	C.CAPACITOR CH 16V 0.1U	2	
C145		ECUM1H121JCN	C.CAPACITOR CH 50V 120P	1	
C146		ECUM1E104ZFN	C.CAPACITOR CH 25V 0.1U	1	
C147-49		ECUM1C104KBN	C.CAPACITOR CH 16V 0.1U	3	
C150		ECEA1HN010S	E.CAPACITOR 50V 1U	1	
C151		ECUM1H103KBN	C.CAPACITOR CH 50V 0.01U	1	
C152		ECEA1AU470	E.CAPACITOR 10V 47U	1	
C154		ECUM1E104ZFN	C.CAPACITOR CH 25V 0.1U	1	
C155		ECUM1H391JCN	C.CAPACITOR CH 50V 390P	1	
C156		ECUM1H151JCN	C.CAPACITOR CH 50V 150P	1	
C157		ECUM1H121JCN	C.CAPACITOR CH 50V 120P	1	
C158		ECUM1H391JCN	C.CAPACITOR CH 50V 390P	1	
C159,60		ECUM1H821JCN	C.CAPACITOR CH 50V 820P	2	
C161,62		ECEA1AN470S	E.CAPACITOR 10V 47U	2	
C163		ECEA1CU470	E.CAPACITOR 16V 47U	1	
C164		ECQM1H104JF	P.CAPACITOR 50V 0.1U	1	
C165		ECEA1AN470S	E.CAPACITOR 10V 47U	1	
C200		ECUM1H103KBN	C.CAPACITOR CH 50V 0.01U	1	
C201		ECEA1AU101	E.CAPACITOR 10V 100U	1	
C202,03		ECUM1H103KBN	C.CAPACITOR CH 50V 0.01U	2	
C204		ECEA1AU101	E.CAPACITOR 10V 100U	1	
C205		ECUM1H103KBN	C.CAPACITOR CH 50V 0.01U	1	
C206		ECUM1H150JCN	C.CAPACITOR CH 50V 15P	1	
C207		ECUM1H470JCN	C.CAPACITOR CH 50V 47P	1	
C209		ECUM1H220JCN	C.CAPACITOR CH 50V 22P	1	
C210		ECUM1H100DCN	C.CAPACITOR CH 50V 10P	1	
C211		ECUM1C104KBN	C.CAPACITOR CH 16V 0.1U	1	
C212		ECUM1E104ZFN	C.CAPACITOR CH 25V 0.1U	1	
C213		ECUM1H221JCN	C.CAPACITOR CH 50V 220P	1	
C214		ECUM1H270JCN	C.CAPACITOR CH 50V 27P	1	
C215		ECUM1H103KBN	C.CAPACITOR CH 50V 0.01U	1	
C219		ECUM1H560JCN	C.CAPACITOR CH 50V 56P	1	
C220		ECUM1E104ZFN	C.CAPACITOR CH 25V 0.1U	1	
C223		ECUM1H221JCN	C.CAPACITOR CH 50V 220P	1	
C224		ECUM1H030DCN	C.CAPACITOR CH 50V 3P	1	
C226		ECEA1HNR47S	E.CAPACITOR 50V 0.47U	1	
C227,28		ECUM1H103KBN	C.CAPACITOR CH 50V 0.01U	2	
C229		ECEA1AU101	E.CAPACITOR 10V 100U	1	
C230,31		ECUM1H103KBN	C.CAPACITOR CH 50V 0.01U	2	
C232		ECEA1AU101	E.CAPACITOR 10V 100U	1	
C233		ECUM1H103KBN	C.CAPACITOR CH 50V 0.01U	1	
C235		ECUM1H120JCN	C.CAPACITOR CH 50V 12P	1	
C236		ECUM1H560JCN	C.CAPACITOR CH 50V 56P	1	
C238		ECUM1H100DCN	C.CAPACITOR CH 50V 10P	1	
C239		ECUM1H680JCN	C.CAPACITOR CH 50V 68P	1	
C240		ECUM1H151JCN	C.CAPACITOR CH 50V 150P	1	
C241		ECUM1H100DCN	C.CAPACITOR CH 50V 10P	1	
C242		ECEA1HNR47S	E.CAPACITOR 50V 0.47U	1	
C243		ECUM1C104KBN	C.CAPACITOR CH 16V 0.1U	1	
C244		ECUM1E104ZFN	C.CAPACITOR CH 25V 0.1U	1	
C245		ECUM1H103KBN	C.CAPACITOR CH 50V 0.01U	1	
C247		ECUM1H103KBN	C.CAPACITOR CH 50V 0.01U	1	
C248		ECEA0JU470	E.CAPACITOR 6.3V 47U	1	
C249		ECUM1H103KBN	C.CAPACITOR CH 50V 0.01U	1	
C257,58		ECUM1E104ZFN	C.CAPACITOR CH 25V 0.1U	2	
C260		ECUM1H221JCN	C.CAPACITOR CH 50V 220P	1	
C261		ECUM1H030DCN	C.CAPACITOR CH 50V 3P	1	
C263		ECUM1H103KBN	C.CAPACITOR CH 50V 0.01U	1	
C264		ECEA1HNR47S	E.CAPACITOR 50V 0.47U	1	
C266,67		ECUM1E104ZFN	C.CAPACITOR CH 25V 0.1U	2	
C268		ECUM1H103KBN	C.CAPACITOR CH 50V 0.01U	1	

Refer to the P.C.BOARDS LIST, page 6-1-1, before using this page.

Ref.No.		Part No.	Part Name & Description	Pcs	Remarks
C269		ECEA1AU101	E.CAPACITOR 10V 100U	1	
C270,71		ECUM1H103KBN	C.CAPACITOR CH 50V 0.01U	2	
C272		ECEA1AU101	E.CAPACITOR 10V 100U	1	
C273		ECUM1H103KBN	C.CAPACITOR CH 50V 0.01U	1	
C275		ECUM1H120JCN	C.CAPACITOR CH 50V 12P	1	
C276		ECUM1H560JCN	C.CAPACITOR CH 50V 56P	1	
C278		ECUM1H100DCN	C.CAPACITOR CH 50V 10P	1	
C279		ECUM1H680JCN	C.CAPACITOR CH 50V 68P	1	
C280		ECUM1H151JCN	C.CAPACITOR CH 50V 150P	1	
C281		ECUM1H100DCN	C.CAPACITOR CH 50V 10P	1	
C282		ECUM1C104KBN	C.CAPACITOR CH 16V 0.1U	1	
C283		ECUM1E104ZFN	C.CAPACITOR CH 25V 0.1U	1	
C284		ECUM1H103KBN	C.CAPACITOR CH 50V 0.01U	1	
C291		ECUM1H103KBN	C.CAPACITOR CH 50V 0.01U	1	
C292		ECEA1CU221	E.CAPACITOR 16V 220U	1	
C293		ECUM1H103KBN	C.CAPACITOR CH 50V 0.01U	1	
C294		ECEA0JU101	E.CAPACITOR 6.3V 100U	1	
C297,98		ECUM1E104ZFN	C.CAPACITOR CH 25V 0.1U	2	
C299		ECUM1H103KBN	C.CAPACITOR CH 50V 0.01U	1	
C300		ECEA1AU101	E.CAPACITOR 10V 100U	1	
C301		ECUM1H103KBN	C.CAPACITOR CH 50V 0.01U	1	
C303		ECUM1H271JCN	C.CAPACITOR CH 50V 270P	1	
C304		ECUM1H330JCN	C.CAPACITOR CH 50V 33P	1	
C305,06		ECEA1HNR47S	E.CAPACITOR 50V 0.47U	2	
C307,08		ECQM1H104JF	P.CAPACITOR 50V 0.1U	2	
C311		ECUM1H560JCN	C.CAPACITOR CH 50V 56P	1	
C312,13		ECUM1H120JCN	C.CAPACITOR CH 50V 12P	2	
C314		ECUM1H560JCN	C.CAPACITOR CH 50V 56P	1	
C501,02		ECEA1CU101	E.CAPACITOR 16V 100U	2	
C503		ECUM1H330JCN	C.CAPACITOR CH 50V 33P	1	
C504		ECUM1C104KBN	C.CAPACITOR CH 16V 0.1U	1	
C505		ECUM1H103KBN	C.CAPACITOR CH 50V 0.01U	1	
C506		ECEA1HNR47S	E.CAPACITOR 50V 0.47U	1	
C507,08		ECUM1H103KBN	C.CAPACITOR CH 50V 0.01U	2	
C510		ECUM1H103KBN	C.CAPACITOR CH 50V 0.01U	1	
C517		ECUM1H103KBN	C.CAPACITOR CH 50V 0.01U	1	
C518		ECUM1H330JCN	C.CAPACITOR CH 50V 33P	1	
C519,20		ECUM1H103KBN	C.CAPACITOR CH 50V 0.01U	2	
C521		ECEA0JU470	E.CAPACITOR 6.3V 47U	1	
C522		ECUM1H220JCN	C.CAPACITOR CH 50V 22P	1	
C523		ECUM1H181JCN	C.CAPACITOR CH 50V 180P	1	
C524		ECUM1H103KBN	C.CAPACITOR CH 50V 0.01U	1	
C525		ECEA0JU101	E.CAPACITOR 6.3V 100U	1	
C526		ECUM1H103KBN	C.CAPACITOR CH 50V 0.01U	1	
C527,28		ECEA1CU101	E.CAPACITOR 16V 100U	2	
C531		ECEA1CU101	E.CAPACITOR 16V 100U	1	
C532		ECUM1H103KBN	C.CAPACITOR CH 50V 0.01U	1	
C533		ECEA1CU101	E.CAPACITOR 16V 100U	1	
C534,35		ECUM1H103KBN	C.CAPACITOR CH 50V 0.01U	2	
C536,37		ECUM1H560JCN	C.CAPACITOR CH 50V 56P	2	
C538,39		ECUM1H103KBN	C.CAPACITOR CH 50V 0.01U	2	
C540		ECUM1E104ZFN	C.CAPACITOR CH 25V 0.1U	1	
C541		ECUM1H270JCN	C.CAPACITOR CH 50V 27P	1	
C542		ECUM1H221JCN	C.CAPACITOR CH 50V 220P	1	
C543		ECUM1H120JCN	C.CAPACITOR CH 50V 12P	1	
C546		ECUM1H101JCN	C.CAPACITOR CH 50V 100P	1	
C547		ECUM1H470JCN	C.CAPACITOR CH 50V 47P	1	
C548		ECUM1H100DCN	C.CAPACITOR CH 50V 10P	1	
C549		ECUM1H330JCN	C.CAPACITOR CH 50V 33P	1	
C550		ECUM1H103KBN	C.CAPACITOR CH 50V 0.01U	1	
C551		ECUM1H471JCN	C.CAPACITOR CH 50V 470P	1	
C552		ECUM1H270JCN	C.CAPACITOR CH 50V 27P	1	
C553		ECUM1H103KBN	C.CAPACITOR CH 50V 0.01U	1	
C554		ECUM1E104ZFN	C.CAPACITOR CH 25V 0.1U	1	
C555		ECUM1H103KBN	C.CAPACITOR CH 50V 0.01U	1	
C559		ECEA0JU470	E.CAPACITOR 6.3V 47U	1	
C560		ECUM1H103KBN	C.CAPACITOR CH 50V 0.01U	1	
C561		ECEA0JN330S	E.CAPACITOR 6.3V 33U	1	
C562		ECUM1H680JCN	C.CAPACITOR CH 50V 68P	1	
C563		ECUM1H271JCN	C.CAPACITOR CH 50V 270P	1	
C564		ECUM1H151JCN	C.CAPACITOR CH 50V 150P	1	
C565		ECUM1H471JCN	C.CAPACITOR CH 50V 470P	1	
C566		ECEA1CU470	E.CAPACITOR 16V 47U	1	
C567-69		ECUM1H103KBN	C.CAPACITOR CH 50V 0.01U	3	
C570		ECEA1CU470	E.CAPACITOR 16V 47U	1	
C571		ECUM1H103KBN	C.CAPACITOR CH 50V 0.01U	1	
C572		ECUM1E104ZFN	C.CAPACITOR CH 25V 0.1U	1	
C573		ECUM1H103KBN	C.CAPACITOR CH 50V 0.01U	1	
C574,75		ECUM1H220JCN	C.CAPACITOR CH 50V 22P	2	
C576,77		ECUM1H103KBN	C.CAPACITOR CH 50V 0.01U	2	
C578		ECEA0JU101	E.CAPACITOR 6.3V 100U	1	
C579		ECUM1E104ZFN	C.CAPACITOR CH 25V 0.1U	1	
C580,81		ECUM1H220JCN	C.CAPACITOR CH 50V 22P	2	
C582		ECEA0JU101	E.CAPACITOR 6.3V 100U	1	
C583		ECUM1E104ZFN	C.CAPACITOR CH 25V 0.1U	1	
C584		ECUM1H103KBN	C.CAPACITOR CH 50V 0.01U	1	
C585		ECUM1H820JCN	C.CAPACITOR CH 50V 82P	1	
C586		ECUM1H100DCN	C.CAPACITOR CH 50V 10P	1	
C587,88		ECUM1H103KBN	C.CAPACITOR CH 50V 0.01U	2	
C589		ECUM1H271JCN	C.CAPACITOR CH 50V 270P	1	
C590		ECUM1H221JCN	C.CAPACITOR CH 50V 220P	1	
C591		ECUM1H820JCN	C.CAPACITOR CH 50V 82P	1	
C592-97		ECUM1H103KBN	C.CAPACITOR CH 50V 0.01U	6	
C598		ECEA1CU101	E.CAPACITOR 16V 100U	1	
C599,00		ECUM1H103KBN	C.CAPACITOR CH 50V 0.01U	2	
C601		ECEA1CU101	E.CAPACITOR 16V 100U	1	
C602		ECUM1H103KBN	C.CAPACITOR CH 50V 0.01U	1	
C603		ECEA1AU101	E.CAPACITOR 10V 100U	1	
C604		ECUM1H103KBN	C.CAPACITOR CH 50V 0.01U	1	
C605		ECEA1AU101	E.CAPACITOR 10V 100U	1	
C606		ECUM1H103KBN	C.CAPACITOR CH 50V 0.01U	1	
C607		ECEA0JU101	E.CAPACITOR 6.3V 100U	1	
C608		ECUM1H103KBN	C.CAPACITOR CH 50V 0.01U	1	
C609		ECEA0JU101	E.CAPACITOR 6.3V 100U	1	
C610		ECUM1H103KBN	C.CAPACITOR CH 50V 0.01U	1	
C611		ECUM1E104ZFN	C.CAPACITOR CH 25V 0.1U	1	
C612		ECUM1H103KBN	C.CAPACITOR CH 50V 0.01U	1	
C615-18		ECUM1H103KBN	C.CAPACITOR CH 50V 0.01U	4	
C619		ECUM1H221JCN	C.CAPACITOR CH 50V 220P	1	
C620		ECQM1H104JF	P.CAPACITOR 50V 0.1U	1	
C621		ECEA1CU100	E.CAPACITOR 16V 10U	1	
C622		ECQM1H104JF	P.CAPACITOR 50V 0.1U	1	
C623		ECEA1CU470	E.CAPACITOR 16V 47U	1	
C624		ECQM1H104JF	P.CAPACITOR 50V 0.1U	1	
C625		ECEA1CU470	E.CAPACITOR 16V 47U	1	
C626		ECQM1H104JF	P.CAPACITOR 50V 0.1U	1	
C627,28		ECUM1H122JN	C.CAPACITOR CH 50V 1200P	2	
C629		ECUM1H221JCN	C.CAPACITOR CH 50V 220P	1	
C630,31		ECUM1H122JN	C.CAPACITOR CH 50V 1200P	2	
C632		ECUM1H103KBN	C.CAPACITOR CH 50V 0.01U	1	
C634		ECUM1H270JCN	C.CAPACITOR CH 50V 27P	1	
C635		ECCF1H120JC	C.CAPACITOR 50V 12P	1	
C800		ECUM1H122JN	C.CAPACITOR CH 50V 1200P	1	
C801		ECUM1H151JCN	C.CAPACITOR CH 50V 150P	1	
C802		ECQM1H122JF	P.CAPACITOR 50V 1200P	1	
C803		ECQV1H684JZ	P.CAPACITOR 50V 0.68U	1	
C804-06		ECUM1H151JCN	C.CAPACITOR CH 50V 150P	3	
C808		ECUM1H151JCN	C.CAPACITOR CH 50V 150P	1	
C809,10		ECUM1H122JN	C.CAPACITOR CH 50V 1200P	2	
C812		ECUM1H103KBN	C.CAPACITOR CH 50V 0.01U	1	
C813		ECUM1H101JCN	C.CAPACITOR CH 50V 100P	1	
C814-22		ECUM1H122JN	C.CAPACITOR CH 50V 1200P	9	
C823-25		ECUM1E104ZFN	C.CAPACITOR CH 25V 0.1U	3	
C827		ECEA0JU101	E.CAPACITOR 6.3V 100U	1	
C828,29		ECUM1H101JCN	C.CAPACITOR CH 50V 100P	2	
C830		ECUM1H820JCN	C.CAPACITOR CH 50V 82P	1	
C831		ECUM1H103KBN	C.CAPACITOR CH 50V 0.01U	1	
C832		ECUM1E104ZFN	C.CAPACITOR CH 25V 0.1U	1	
C834		ECEA1CN100S	E.CAPACITOR 16V 10U	1	
C835		ECEA1EN4R7S	E.CAPACITOR 25V 4.7U	1	
C836		ECEA0JN330S	E.CAPACITOR 6.3V 33U	1	
C837		ECEA1EN4R7S	E.CAPACITOR 25V 4.7U	1	
C838		ECUM1E104ZFN	C.CAPACITOR CH 25V 0.1U	1	
C841		ECUM1H103KBN	C.CAPACITOR CH 50V 0.01U	1	
C842		ECEA0JU101	E.CAPACITOR 6.3V 100U	1	
C843,44		ECUM1H103KBN	C.CAPACITOR CH 50V 0.01U	2	
C845		ECEA0JU101	E.CAPACITOR 6.3V 100U	1	
C846,47		ECUM1H103KBN	C.CAPACITOR CH 50V 0.01U	2	
C848		ECEA0JU101	E.CAPACITOR 6.3V 100U	1	
C849		ECUM1H103KBN	C.CAPACITOR CH 50V 0.01U	1	

Refer to the P.C.BOARDS LIST, page 6-1-1, before using this page.

Ref.No.		Part No.	Part Name & Description	Pcs	Remarks
C850		ECEA0JU101	E.CAPACITOR 6.3V 100U	1	
C851		ECUM1H820JCN	C.CAPACITOR CH 50V 82P	1	
C852		ECUM1H103KBN	C.CAPACITOR CH 50V 0.01U	1	
C853		ECUM1H122JN	C.CAPACITOR CH 50V 1200P	1	
C854		ECQB1H272JF	P.CAPACITOR 50V 2700P	1	
C855,56		ECCF1H331J	C.CAPACITOR 50V 330P	2	
C1001		ECEA1HU010	E.CAPACITOR 50V 1U	1	
C1003,04		ECEA1CN100S	E.CAPACITOR 16V 10U	2	
C1005		ECUM1H221JCN	C.CAPACITOR CH 50V 220P	1	
C1006		ECUM1H470JCN	C.CAPACITOR CH 50V 47P	1	
D1		1SZ51	DIODE	1	
D2		MA153	DIODE	1	
D4		MA153	DIODE	1	
D8		MA151WK	DIODE	1	
D11		MA151WK	DIODE	1	
D200,01		RD4.7EB2	ZENER 4.7V	2	
D203,04		MA151K	DIODE	2	
D210		MA151K	DIODE	1	
D501		RD3.6EB	ZENER 3.6V	1	
D508		RD4.7EB2	ZENER 4.7V	1	
D509		MA151K	DIODE	1	
D510,11		MA335-R	DIODE	2	
D512		MA153	DIODE	1	
D514		MA151K	DIODE	1	
D800		MA704	DIODE	1	
D801		MA153	DIODE	1	
D802		MA151K	DIODE	1	
FL1		VLF0650	FILTER	1	
FL3		VLF0754	FILTER	1	
FL200		VLF0712	FILTER	1	
FL201,02		VLF0753	FILTER	2	
IC1		AN78N09	IC	1	FOR VEP88063C
IC1		MC10107L	IC	1	FOR VEP80632A
IC2		AN79N09	IC	1	
IC3		MC74HC4053F	IC	1	
IC4-C6		TL082CPS	IC	3	
IC7		HA19211BNT	IC	1	
IC8		MC74HC574F	IC	1	
IC9		TL082CPS	IC	1	
IC10-12		TL082CPS	IC	3	
IC13		HA19211BNT	IC	1	
IC14		MC74HC574F	IC	1	
IC15		AN78N09	IC	1	
IC16		AN79N09	IC	1	
IC17		AN79L05	IC	1	
IC18,19		AN78N05	IC	2	
IC26,27		AN91A12S	IC	2	
IC28		MC74HC08AF	IC	1	
IC29		SN74LS123NS	IC	1	
IC30		NE521D	IC	1	
IC32		AN78N05	IC	1	
IC33		AN79N05	IC	1	
IC200		AN78N09	IC	1	
IC201		AN79N09	IC	1	
IC202		AN78N09	IC	1	
IC203		AN79N09	IC	1	
IC204		AN78N09	IC	1	
IC205		AN79N09	IC	1	
IC206		TL082CPS	IC	1	
IC207		CA3054	IC	1	
IC208-10		TL082CPS	IC	3	
IC211		AN78L05	IC	1	
IC215		TL082CPS	IC	1	
IC216		AN79L09	IC	1	
IC501		TL082CPS	IC	1	
IC502,03		CA3054	IC	2	

Ref.No.		Part No.	Part Name & Description	Pcs	Remarks
IC504,05		NJM1496M	IC	2	
IC506		10116D	IC	1	
IC507		MC74HC04AF	IC	1	
IC508		NJM1496M	IC	1	
IC509		MC74HC00AF	IC	1	
IC510		MC74HC74AF	IC	1	
IC511		SN74LS123NS	IC	1	
IC512		10116D	IC	1	
IC513		MC74HC00AF	IC	1	
IC514		MC74HC74AF	IC	1	
IC517		AN78N09	IC	1	
IC518		AN79N09	IC	1	
IC519		AN78N05	IC	1	
IC520		AN79N05	IC	1	
IC521		AN78N09	IC	1	
IC522		AN79N09	IC	1	
IC523		MC74HC04AF	IC	1	
IC800		NE521D	IC	1	
IC801		MC74HC126AF	IC	1	
IC802,03		MC10125L	IC	2	
IC804		MN53010VYD	IC	1	
IC805		UPC311G	IC	1	
IC806		MC74HC126AF	IC	1	
IC807-14		TL082CPS	IC	8	
IC815-17		MC74HC4053F	IC	3	
IC818		AN78N09	IC	1	
IC819		AN79N09	IC	1	
IC820		AN78N05	IC	1	
IC821		AN79N05	IC	1	
L1-L3		VLP0017	COIL	3	
L5		VLQEL05S821J	COIL 820UH	1	
L6-L9		VLP0017	COIL	4	
L10		VLQEL05S221J	COIL 220UH	1	
L12		VLQEL05S5R6J	COIL 5.6UH	1	
L13		VLQEL05S390J	COIL 39UH	1	
L14		VLQEL05S100J	COIL 10UH	1	
L15		VLQEL05S5R6J	COIL 5.6UH	1	
L17		VLQEL05S5R6J	COIL 5.6UH	1	
L18		VLQEL05S390J	COIL 39UH	1	
L19		VLQEL05S100J	COIL 10UH	1	
L20		VLQEL05S5R6J	COIL 5.6UH	1	
L200		VLQEL05S6R8J	COIL 6.8UH	1	
L201		ERDS2T0	C.RESISTOR 1/4W 0	1	
L203		ERDS2T0	C.RESISTOR 1/4W 0	1	
L205,06		VLP0017	COIL	2	
L208,09		VLQEL05S6R8J	COIL 6.8UH	2	
L210		VLQEL05S101J	COIL 100UH	1	
L211,12		VLQEL05S6R8J	COIL 6.8UH	2	
L501,02		VLQEL05F101K	COIL 100UH	2	
L503		VLQEL05S6R8J	COIL 6.8UH	1	
L505		VLQEL05F101K	COIL 100UH	1	
L506		VLQEL05S680J	COIL 68UH	1	
L507,08		VLQEL05F101K	COIL 100UH	2	
L511		VLQEL05S150J	COIL 15UH	1	
L512		VLQEL05S5R6J	COIL 5.6UH	1	
L513		VLQEL05S6R8J	COIL 6.8UH	1	
L514		VLQEL05S180J	COIL 18UH	1	
L515		VLQEL05S560J	COIL 56UH	1	
L518,19		VLQEL05F101K	COIL 100UH	2	
L520,21		VLQEL05S470J	COIL 47UH	2	
L522,23		VLP0017	COIL	2	
L800		VLQEL06F8R2J	COIL 8.2UH	1	
L801		VLQEL05S8R2J	COIL 8.2UH	1	
Q1		2SD601	TRANSISTOR CHIP	1	(Q,R)
Q2		2SB709	TRANSISTOR CHIP	1	(Q,R)
Q3		2SD601	TRANSISTOR CHIP	1	(Q,R)
Q4		2SB709	TRANSISTOR CHIP	1	(Q,R)
Q5		2SB709	TRANSISTOR CHIP	1	(Q,R)
Q6,Q7		2SC2404	TRANSISTOR CHIP	2	(C,D)

Refer to the P.C.BOARDS LIST, page 6-1-1, before using this page.

Ref.No.		Part No.	Part Name & Description	Pcs	Remarks
Q8		2SA1022-C	TRANSISTOR CHIP	1	(B,C)
Q9		2SC2295	TRANSISTOR CHIP	1	(B,C)
Q10		2SA1022-C	TRANSISTOR CHIP	1	(B,C)
Q11		2SK374	TRANSISTOR	1	
Q12		2SB709	TRANSISTOR CHIP	1	(Q,R)
Q13		2SD601	TRANSISTOR CHIP	1	(Q,R)
Q14		2SB709	TRANSISTOR CHIP	1	(Q,R)
Q15		2SD601	TRANSISTOR CHIP	1	(Q,R)
Q16		2SB709	TRANSISTOR CHIP	1	(Q,R)
Q17,18		2SC2404	TRANSISTOR CHIP	2	(C,D)
Q19		2SA1022-C	TRANSISTOR CHIP	1	(B,C)
Q20		2SC2295	TRANSISTOR CHIP	1	(B,C)
Q21		2SA1022-C	TRANSISTOR CHIP	1	(B,C)
Q22		2SK374	TRANSISTOR	1	
Q23		2SB709	TRANSISTOR CHIP	1	(Q,R)
Q24		2SD601	TRANSISTOR CHIP	1	(Q,R)
Q25		2SA1022-C	TRANSISTOR CHIP	1	(B,C)
Q26-28		2SD601	TRANSISTOR CHIP	3	(Q,R)
Q200		2SD601	TRANSISTOR CHIP	1	(Q,R)
Q201,02		2SB709	TRANSISTOR CHIP	2	(Q,R)
Q203,04		2SD601	TRANSISTOR CHIP	2	(Q,R)
Q205,06		2SC2404	TRANSISTOR CHIP	2	(C,D)
Q207		2SA1022-C	TRANSISTOR CHIP	1	(B,C)
Q208		2SC2295	TRANSISTOR CHIP	1	(B,C)
Q209		2SD601	TRANSISTOR CHIP	1	(Q,R)
Q210		2SK198	TRANSISTOR	1	(Q,R)
Q211-15		2SD601	TRANSISTOR CHIP	5	(Q,R)
Q219		2SD601	TRANSISTOR CHIP	1	(Q,R)
Q220,21		2SB709	TRANSISTOR CHIP	2	(Q,R)
Q222		2SD601	TRANSISTOR CHIP	1	(Q,R)
Q223,24		2SC2404	TRANSISTOR CHIP	2	(C,D)
Q225		2SA1022-C	TRANSISTOR CHIP	1	(B,C)
Q226		2SC2295	TRANSISTOR CHIP	1	(B,C)
Q227		2SD601	TRANSISTOR CHIP	1	(Q,R)
Q229		2SB709	TRANSISTOR CHIP	1	(Q,R)
Q230		2SD601	TRANSISTOR CHIP	1	(Q,R)
Q232,33		2SB709	TRANSISTOR CHIP	2	(Q,R)
Q234		2SD601	TRANSISTOR CHIP	1	(Q,R)
Q235,36		2SC2404	TRANSISTOR CHIP	2	(C,D)
Q237		2SK198	TRANSISTOR	1	(Q,R)
Q238,39		2SB709	TRANSISTOR CHIP	2	(Q,R)
Q240		2SD601	TRANSISTOR CHIP	1	(Q,R)
Q241,42		2SC2404	TRANSISTOR CHIP	2	(C,D)
Q243		2SA1022-C	TRANSISTOR CHIP	1	(B,C)
Q244		2SC2295	TRANSISTOR CHIP	1	(B,C)
Q245		2SD601	TRANSISTOR CHIP	1	(Q,R)
Q246		2SK198	TRANSISTOR	1	(Q,R)
Q247		2SB709	TRANSISTOR CHIP	1	(Q,R)
Q248,49		2SD601	TRANSISTOR CHIP	2	(Q,R)
Q250,51		2SB709	TRANSISTOR CHIP	2	(Q,R)
Q252		2SD601	TRANSISTOR CHIP	1	(Q,R)
Q253,54		2SC2404	TRANSISTOR CHIP	2	(C,D)
Q255		2SK198	TRANSISTOR	1	(Q,R)
Q256		2SC2404	TRANSISTOR CHIP	1	(C,D)
Q257		2SB709	TRANSISTOR CHIP	1	(Q,R)
Q258		2SA1022-C	TRANSISTOR CHIP	1	(B,C)
Q259-63		2SC2295	TRANSISTOR CHIP	5	(B,C)
Q265		2SC2295	TRANSISTOR CHIP	1	(B,C)
Q266,67		2SD601	TRANSISTOR CHIP	2	(Q,R)
Q284		2SK198	TRANSISTOR	1	(Q,R)
Q285		2SC2295	TRANSISTOR CHIP	1	(B,C)
Q286,87		2SD601	TRANSISTOR CHIP	2	(Q,R)
Q288,89		2SB709	TRANSISTOR CHIP	2	(Q,R)
Q290		2SD601	TRANSISTOR CHIP	1	(Q,R)
Q291,92		2SB709	TRANSISTOR CHIP	2	(Q,R)
Q501,02		2SC2295	TRANSISTOR CHIP	2	(B,C)
Q503,04		2SD601	TRANSISTOR CHIP	2	(Q,R)
Q505		2SK198	TRANSISTOR	1	(Q,R)
Q506		2SB709	TRANSISTOR CHIP	1	(Q,R)
Q507-09		2SD601	TRANSISTOR CHIP	3	(Q,R)
Q514-16		2SD601	TRANSISTOR CHIP	3	(Q,R)
Q518		2SD601	TRANSISTOR CHIP	1	(Q,R)
Q519		2SC2295	TRANSISTOR CHIP	1	(B,C)
Q520		2SD601	TRANSISTOR CHIP	1	(Q,R)
Q521,22		2SC2295	TRANSISTOR CHIP	2	(B,C)

Ref.No.		Part No.	Part Name & Description	Pcs	Remarks
Q523		2SD601	TRANSISTOR CHIP	1	(Q,R)
Q524,25		2SB709	TRANSISTOR CHIP	2	(Q,R)
Q526,27		2SC2295	TRANSISTOR CHIP	2	(B,C)
Q528		2SD601	TRANSISTOR CHIP	1	(Q,R)
Q532		2SB709	TRANSISTOR CHIP	1	(Q,R)
Q533-37		2SD601	TRANSISTOR CHIP	5	(Q,R)
Q538		2SB709	TRANSISTOR CHIP	1	(Q,R)
Q539		2SD601	TRANSISTOR CHIP	1	(Q,R)
Q540		2SB709	TRANSISTOR CHIP	1	(Q,R)
Q541		2SD601	TRANSISTOR CHIP	1	(Q,R)
Q542		2SB709	TRANSISTOR CHIP	1	(Q,R)
Q543		2SD601	TRANSISTOR CHIP	1	(Q,R)
Q544		2SB709	TRANSISTOR CHIP	1	(Q,R)
Q545-52		2SD601	TRANSISTOR CHIP	8	(Q,R)
Q800		2SC2295	TRANSISTOR CHIP	1	(B,C)
Q801		2SD601	TRANSISTOR CHIP	1	(Q,R)
Q802		2SB709	TRANSISTOR CHIP	1	(Q,R)
Q803		2SC2295	TRANSISTOR CHIP	1	(B,C)
Q804		2SB709	TRANSISTOR CHIP	1	(Q,R)
Q805		2SC2295	TRANSISTOR CHIP	1	(B,C)
Q807		2SD601	TRANSISTOR CHIP	1	(Q,R)
Q808-15		2SC2295	TRANSISTOR CHIP	8	(B,C)
Q816,17		2SB709	TRANSISTOR CHIP	2	(Q,R)
Q818,19		2SC2295	TRANSISTOR CHIP	2	(B,C)
Q826		ECUM1E104ZFN	C.CAPACITOR CH 25V 0.1U	1	
Q833		ECUM1E104ZFN	C.CAPACITOR CH 25V 0.1U	1	
			RESISTORS		
R1		ERJ6GEYG222	M.RESISTOR CH 1/10W 2.2K	1	
R2,R3		ERJ6GEYG220	M.RESISTOR CH 1/10W 22	2	
R4,R5		ERJ6GEYG152	M.RESISTOR CH 1/10W 1.5K	2	
R6,R7		VRE0034E561	M.RESISTOR CH 1/10W 560	2	
R8		ERJ6GEYG150	M.RESISTOR CH 1/10W 15	1	
R9		ERJ6GEYG473	M.RESISTOR CH 1/10W 47K	1	
R10		VRE0034E301	M.RESISTOR CH 1/10W 300	1	
R11		ERJ6GEYG220	M.RESISTOR CH 1/10W 22	1	
R12		ERJ6GEYG122	M.RESISTOR CH 1/10W 1.2K	1	
R13		ERJ6GEYG121	M.RESISTOR CH 1/10W 120	1	
R14		ERJ6GEYG680	M.RESISTOR CH 1/10W 68	1	
R15		ERJ6GEYG221	M.RESISTOR CH 1/10W 220	1	
R16		ERJ6GEYG683	M.RESISTOR CH 1/10W 68K	1	
R17		ERJ6GEYG332	M.RESISTOR CH 1/10W 3.3K	1	
R18		ERJ6GEYG151	M.RESISTOR CH 1/10W 150	1	
R19		ERJ6GEYG101	M.RESISTOR CH 1/10W 100	1	
R20		ERJ6GEYG472	M.RESISTOR CH 1/10W 4.7K	1	
R21		ERJ6GEYG183	M.RESISTOR CH 1/10W 18K	1	
R22		ERJ6GEYG821	M.RESISTOR CH 1/10W 820	1	
R23,24		ERJ6GEYG102	M.RESISTOR CH 1/10W 1K	2	
R25,26		ERJ6GEYG101	M.RESISTOR CH 1/10W 100	2	
R27		ERJ6GEYG122	M.RESISTOR CH 1/10W 1.2K	1	
R28		ERJ6GEYG471	M.RESISTOR CH 1/10W 470	1	
R29		ERJ6GEYG222	M.RESISTOR CH 1/10W 2.2K	1	
R30		ERJ6GEYG272	M.RESISTOR CH 1/10W 2.7K	1	
R31		VRE0034E333	M.RESISTOR CH 1/10W 33K	1	
R32		VRE0034E103	M.RESISTOR CH 1/10W 10K	1	
R33		ERJ6GEYG222	M.RESISTOR CH 1/10W 2.2K	1	
R34		ERJ6GEYG223	M.RESISTOR CH 1/10W 22K	1	
R35		ERJ6GEYG562	M.RESISTOR CH 1/10W 5.6K	1	
R36,37		ERJ6GEYG332	M.RESISTOR CH 1/10W 3.3K	2	
R38		ERJ6GEYG823	M.RESISTOR CH 1/10W 82K	1	
R39		ERJ6GEYG332	M.RESISTOR CH 1/10W 3.3K	1	
R40		ERJ6GEYG222	M.RESISTOR CH 1/10W 2.2K	1	
R41		ERJ6GEYG563	M.RESISTOR CH 1/10W 56K	1	
R42		ERJ6GEYG333	M.RESISTOR CH 1/10W 33K	1	
R43		ERJ6GEYG332	M.RESISTOR CH 1/10W 3.3K	1	
R44		ERJ6GEYG272	M.RESISTOR CH 1/10W 2.7K	1	
R45		ERJ6GEYG273	M.RESISTOR CH 1/10W 27K	1	
R46		ERJ6GEYG224	M.RESISTOR CH 1/10W 220K	1	
R47		ERJ6GEYG472	M.RESISTOR CH 1/10W 4.7K	1	
R48		ERJ6GEYG272	M.RESISTOR CH 1/10W 2.7K	1	
R49		ERJ6GEYG221	M.RESISTOR CH 1/10W 220	1	
R50		ERJ6GEYG391	M.RESISTOR CH 1/10W 390	1	
R51		VRE0034E273	M.RESISTOR CH 1/10W 27K	1	

Refer to the P.C.BOARDS LIST, page 6-1-1, before using this page.

Ref.No.		Part No.	Part Name & Description	Pcs	Remarks
R52		VRE0034E203	M.RESISTOR CH 1/10W 20K	1	
R53		VRE0034E153	M.RESISTOR CH 1/10W 15K	1	
R54		ERJ6GEYG220	M.RESISTOR CH 1/10W 22	1	
R55		ERJ6GEYG222	M.RESISTOR CH 1/10W 2.2K	1	
R56		ERJ6GEYG332	M.RESISTOR CH 1/10W 3.3K	1	
R57		ERJ6GEYG222	M.RESISTOR CH 1/10W 2.2K	1	
R58,59		ERJ6GEYG220	M.RESISTOR CH 1/10W 22	2	
R60,61		ERJ6GEYG152	M.RESISTOR CH 1/10W 1.5K	2	
R62,63		VRE0034E561	M.RESISTOR CH 1/10W 560	2	
R64		ERJ6GEYG150	M.RESISTOR CH 1/10W 15	1	
R65		VRE0034E301	M.RESISTOR CH 1/10W 300	1	
R66		ERJ6GEYG220	M.RESISTOR CH 1/10W 22	1	
R67		ERJ6GEYG222	M.RESISTOR CH 1/10W 2.2K	1	
R68		ERJ6GEYG102	M.RESISTOR CH 1/10W 1K	1	
R69		ERJ6GEYG471	M.RESISTOR CH 1/10W 470	1	
R70		ERJ6GEYG122	M.RESISTOR CH 1/10W 1.2K	1	
R71		ERJ6GEYG101	M.RESISTOR CH 1/10W 100	1	
R72		ERJ6GEYG472	M.RESISTOR CH 1/10W 4.7K	1	
R73		ERJ6GEYG183	M.RESISTOR CH 1/10W 18K	1	
R74		ERJ6GEYG102	M.RESISTOR CH 1/10W 1K	1	
R75		ERJ6GEYG101	M.RESISTOR CH 1/10W 100	1	
R76		ERJ6GEYG102	M.RESISTOR CH 1/10W 1K	1	
R77		ERJ6GEYG101	M.RESISTOR CH 1/10W 100	1	
R78		ERJ6GEYG122	M.RESISTOR CH 1/10W 1.2K	1	
R79		ERJ6GEYG471	M.RESISTOR CH 1/10W 470	1	
R80		ERJ6GEYG222	M.RESISTOR CH 1/10W 2.2K	1	
R81		ERJ6GEYG272	M.RESISTOR CH 1/10W 2.7K	1	
R82		ERJ6GEYG223	M.RESISTOR CH 1/10W 22K	1	
R83		ERJ6GEYG222	M.RESISTOR CH 1/10W 2.2K	1	
R84		ERJ6GEYG220	M.RESISTOR CH 1/10W 22	1	
R85		ERJ6GEYG562	M.RESISTOR CH 1/10W 5.6K	1	
R86,87		ERJ6GEYG332	M.RESISTOR CH 1/10W 3.3K	2	
R88		ERJ6GEYG823	M.RESISTOR CH 1/10W 82K	1	
R89		ERJ6GEYG332	M.RESISTOR CH 1/10W 3.3K	1	
R90		ERJ6GEYG222	M.RESISTOR CH 1/10W 2.2K	1	
R91		ERJ6GEYG563	M.RESISTOR CH 1/10W 56K	1	
R92		ERJ6GEYG333	M.RESISTOR CH 1/10W 33K	1	
R93		ERJ6GEYG332	M.RESISTOR CH 1/10W 3.3K	1	
R94		ERJ6GEYG273	M.RESISTOR CH 1/10W 27K	1	
R95		ERJ6GEYG272	M.RESISTOR CH 1/10W 2.7K	1	
R96		ERJ6GEYG472	M.RESISTOR CH 1/10W 4.7K	1	
R97		ERJ6GEYG224	M.RESISTOR CH 1/10W 220K	1	
R98		ERJ6GEYG272	M.RESISTOR CH 1/10W 2.7K	1	
R99		ERJ6GEYG221	M.RESISTOR CH 1/10W 220	1	
R100		ERJ6GEYG222	M.RESISTOR CH 1/10W 2.2K	1	
R101		ERJ6GEYG332	M.RESISTOR CH 1/10W 3.3K	1	
R102		ERJ6GEYG272	M.RESISTOR CH 1/10W 2.7K	1	
R103		VRE0034E223	M.RESISTOR CH 1/10W 22K	1	
R104		VRE0034E153	M.RESISTOR CH 1/10W 15K	1	
R105		ERJ6GEYG272	M.RESISTOR CH 1/10W 2.7K	1	
R109,10		ERJ6GEY0R00	M.RESISTOR CH 1/10W 0	2	
R133		ERJ6GEYG224	M.RESISTOR CH 1/10W 220K	1	
R135,36		ERJ6GEYG822	M.RESISTOR CH 1/10W 8.2K	2	
R137		ERJ6GEYG222	M.RESISTOR CH 1/10W 2.2K	1	
R138		ERJ6GEYG102	M.RESISTOR CH 1/10W 1K	1	
R139		ERJ6GEYG222	M.RESISTOR CH 1/10W 2.2K	1	
R140		ERJ6GEYG104	M.RESISTOR CH 1/10W 100K	1	
R141		ERJ6GEYG470	M.RESISTOR CH 1/10W 47	1	
R142		ERJ6GEYG681	M.RESISTOR CH 1/10W 680	1	
R143,44		ERJ6GEYG301	M.RESISTOR CH 1/10W 300	2	
R145		ERJ6GEYG153	M.RESISTOR CH 1/10W 15K	1	
R146		ERJ6GEYG105	M.RESISTOR CH 1/10W 1M	1	
R148,49		ERJ6GEYG103	M.RESISTOR CH 1/10W 10K	2	
R150		ERJ6GEYG104	M.RESISTOR CH 1/10W 100K	1	
R151		ERJ6GEYG102	M.RESISTOR CH 1/10W 1K	1	
R152		ERJ6GEYG222	M.RESISTOR CH 1/10W 2.2K	1	
R153		ERJ6GEYG333	M.RESISTOR CH 1/10W 33K	1	
R154		ERJ6GEYG104	M.RESISTOR CH 1/10W 100K	1	
R155		ERJ6GEYG332	M.RESISTOR CH 1/10W 3.3K	1	
R156		ERJ6GEYG472	M.RESISTOR CH 1/10W 4.7K	1	
R157		ERJ6GEYG103	M.RESISTOR CH 1/10W 10K	1	
R158		ERJ6GEYG221	M.RESISTOR CH 1/10W 220	1	
R159		ERJ6GEYG681	M.RESISTOR CH 1/10W 680	1	
R160,61		ERJ6GEYG301	M.RESISTOR CH 1/10W 300	2	
R162,63		ERJ6GEYG103	M.RESISTOR CH 1/10W 10K	2	

Ref.No.		Part No.	Part Name & Description	Pcs	Remarks
R164,65		ERJ6GEY0R00	M.RESISTOR CH 1/10W 0	2	
R166,67		ERJ6GEYG102	M.RESISTOR CH 1/10W 1K	2	
R168		ERJ6GEYG470	M.RESISTOR CH 1/10W 47	1	
R169,70		ERJ6GEYG272	M.RESISTOR CH 1/10W 2.7K	2	
R171		ERJ6GEYG102	M.RESISTOR CH 1/10W 1K	1	
R172		ERJ6GEYG272	M.RESISTOR CH 1/10W 2.7K	1	
R173		ERJ6GEYG470	M.RESISTOR CH 1/10W 47	1	
R174		ERJ6GEY0R00	M.RESISTOR CH 1/10W 0	1	
R176		ERDS2TJ101	C.RESISTOR 1/4W 100	1	
R200		ERJ6GEYG272	M.RESISTOR CH 1/10W 2.7K	1	
R201		ERJ6GEYG222	M.RESISTOR CH 1/10W 2.2K	1	
R202,03		VRE0034E331	M.RESISTOR CH 1/10W 330	2	
R204		ERJ6GEYG470	M.RESISTOR CH 1/10W 47	1	
R205		ERJ6GEYG272	M.RESISTOR CH 1/10W 2.7K	1	
R206,07		VRE0034E102	M.RESISTOR CH 1/10W 1K	2	
R209		VRE0034E621	M.RESISTOR CH 1/10W 620	1	
R210,11		ERJ6GEYG272	M.RESISTOR CH 1/10W 2.7K	2	
R212		ERJ6GEYG102	M.RESISTOR CH 1/10W 1K	1	
R213		ERJ6GEYG221	M.RESISTOR CH 1/10W 220	1	
R214		ERJ6GEYG681	M.RESISTOR CH 1/10W 680	1	
R215		ERJ6GEYG101	M.RESISTOR CH 1/10W 100	1	
R216		ERJ6GEYG102	M.RESISTOR CH 1/10W 1K	1	
R217		ERJ6GEYG101	M.RESISTOR CH 1/10W 100	1	
R218		ERJ6GEYG102	M.RESISTOR CH 1/10W 1K	1	
R219		ERJ6GEYG152	M.RESISTOR CH 1/10W 1.5K	1	
R220		ERJ6GEYG222	M.RESISTOR CH 1/10W 2.2K	1	
R221		ERJ6GEYG471	M.RESISTOR CH 1/10W 470	1	
R222,23		ERJ6GEYG222	M.RESISTOR CH 1/10W 2.2K	2	
R224		ERJ6GEYG101	M.RESISTOR CH 1/10W 100	1	
R225		ERJ6GEYG683	M.RESISTOR CH 1/10W 68K	1	
R226		ERJ6GEYG272	M.RESISTOR CH 1/10W 2.7K	1	
R227		ERJ6GEYG222	M.RESISTOR CH 1/10W 2.2K	1	
R228		ERJ6GEYG103	M.RESISTOR CH 1/10W 10K	1	
R229		ERJ6GEYG102	M.RESISTOR CH 1/10W 1K	1	
R230		ERJ6GEYG222	M.RESISTOR CH 1/10W 2.2K	1	
R231		ERJ6GEYG470	M.RESISTOR CH 1/10W 47	1	
R233		ERJ6GEYG102	M.RESISTOR CH 1/10W 1K	1	
R234		ERJ6GEYG681	M.RESISTOR CH 1/10W 680	1	
R235		ERJ6GEYG561	M.RESISTOR CH 1/10W 560	1	
R236		ERJ6GEYG121	M.RESISTOR CH 1/10W 120	1	
R237		ERJ6GEYG391	M.RESISTOR CH 1/10W 390	1	
R238		ERJ6GEYG473	M.RESISTOR CH 1/10W 47K	1	
R240		ERJ6GEYG182	M.RESISTOR CH 1/10W 1.8K	1	
R241		ERJ6GEYG273	M.RESISTOR CH 1/10W 27K	1	
R242		ERJ6GEYG470	M.RESISTOR CH 1/10W 47	1	
R243		ERJ6GEYG182	M.RESISTOR CH 1/10W 1.8K	1	
R244		VRE0034E151	M.RESISTOR CH 1/10W 150	1	
R245		ERJ6GEYG152	M.RESISTOR CH 1/10W 1.5K	1	
R246		ERJ6GEYG331	M.RESISTOR CH 1/10W 330	1	
R257		VRE0034E331	M.RESISTOR CH 1/10W 330	1	
R258-60		VRE0034E301	M.RESISTOR CH 1/10W 300	3	
R262,63		VRE0034E102	M.RESISTOR CH 1/10W 1K	2	
R264		VRE0034E821	M.RESISTOR CH 1/10W 820	1	
R265,66		VRE0034E102	M.RESISTOR CH 1/10W 1K	2	
R268		ERJ6GEY0R00	M.RESISTOR CH 1/10W 0	1	
R269		ERJ6GEYG272	M.RESISTOR CH 1/10W 2.7K	1	
R270		ERJ6GEYG470	M.RESISTOR CH 1/10W 47	1	
R271		ERJ6GEYG331	M.RESISTOR CH 1/10W 330	1	
R272		ERJ6GEYG152	M.RESISTOR CH 1/10W 1.5K	1	
R273		ERJ6GEYG102	M.RESISTOR CH 1/10W 1K	1	
R274		ERJ6GEYG101	M.RESISTOR CH 1/10W 100	1	
R275		ERJ6GEYG102	M.RESISTOR CH 1/10W 1K	1	
R276		ERJ6GEYG101	M.RESISTOR CH 1/10W 100	1	
R277		ERJ6GEYG152	M.RESISTOR CH 1/10W 1.5K	1	
R278		ERJ6GEYG471	M.RESISTOR CH 1/10W 470	1	
R279		ERJ6GEYG222	M.RESISTOR CH 1/10W 2.2K	1	
R280		ERJ6GEYG152	M.RESISTOR CH 1/10W 1.5K	1	
R281		ERJ6GEYG222	M.RESISTOR CH 1/10W 2.2K	1	
R282		ERJ6GEYG101	M.RESISTOR CH 1/10W 100	1	
R283		ERJ6GEYG272	M.RESISTOR CH 1/10W 2.7K	1	
R285,86		ERJ6GEYG103	M.RESISTOR CH 1/10W 10K	2	
R288		ERJ6GEYG102	M.RESISTOR CH 1/10W 1K	1	
R290		ERJ6GEYG470	M.RESISTOR CH 1/10W 47	1	
R291		ERJ6GEYG222	M.RESISTOR CH 1/10W 2.2K	1	
R292		ERJ6GEYG102	M.RESISTOR CH 1/10W 1K	1	

Refer to the P.C.BOARDS LIST, page 6-1-1, before using this page.

Ref.No.		Part No.	Part Name & Description	Pcs	Remarks
R293		ERJ6GEYG152	M.RESISTOR CH 1/10W 1.5K	1	
R294		ERJ6GEYG470	M.RESISTOR CH 1/10W 47	1	
R298		ERJ6GEYG470	M.RESISTOR CH 1/10W 47	1	
R299		ERJ6GEYG272	M.RESISTOR CH 1/10W 2.7K	1	
R300,01		VRE0034E102	M.RESISTOR CH 1/10W 1K	2	
R302		VRE0034E391	M.RESISTOR CH 1/10W 390	1	
R303		ERJ6GEYG272	M.RESISTOR CH 1/10W 2.7K	1	
R306		ERJ6GEYG683	M.RESISTOR CH 1/10W 68K	1	
R307		ERJ6GEYG821	M.RESISTOR CH 1/10W 820	1	
R308		ERJ6GEYG273	M.RESISTOR CH 1/10W 27K	1	
R309		ERJ6GEYG272	M.RESISTOR CH 1/10W 2.7K	1	
R310		ERJ6GEYG682	M.REISITOR CH 1/10W 6.8K	1	
R311		ERJ6GEYG272	M.RESISTOR CH 1/10W 2.7K	1	
R312		ERJ6GEYG222	M.RESISTOR CH 1/10W 2.2K	1	
R313		ERJ6GEYG101	M.RESISTOR CH 1/10W 100	1	
R314		ERJ6GEYG683	M.RESISTOR CH 1/10W 68K	1	
R316-18		VRE0034E301	M.RESISTOR CH 1/10W 300	3	
R320,21		VRE0034E102	M.RESISTOR CH 1/10W 1K	2	
R322		VRE0034E821	M.RESISTOR CH 1/10W 820	1	
R323,24		VRE0034E102	M.RESISTOR CH 1/10W 1K	2	
R326		ERJ6GEY0R00	M.RESISTOR CH 1/10W 0	1	
R327		ERJ6GEYG272	M.RESISTOR CH 1/10W 2.7K	1	
R328		ERJ6GEYG152	M.RESISTOR CH 1/10W 1.5K	1	
R329		ERJ6GEYG470	M.RESISTOR CH 1/10W 47	1	
R330		ERJ6GEYG331	M.RESISTOR CH 1/10W 330	1	
R331		ERJ6GEYG102	M.RESISTOR CH 1/10W 1K	1	
R332		ERJ6GEYG101	M.RESISTOR CH 1/10W 100	1	
R333		ERJ6GEYG102	M.RESISTOR CH 1/10W 1K	1	
R334		ERJ6GEYG101	M.RESISTOR CH 1/10W 100	1	
R335		ERJ6GEYG152	M.RESISTOR CH 1/10W 1.5K	1	
R336		ERJ6GEYG471	M.RESISTOR CH 1/10W 470	1	
R337		ERJ6GEYG222	M.RESISTOR CH 1/10W 2.2K	1	
R338,39		ERJ6GEYG152	M.RESISTOR CH 1/10W 1.5K	2	
R340		ERJ6GEYG101	M.RESISTOR CH 1/10W 100	1	
R341		ERJ6GEYG272	M.RESISTOR CH 1/10W 2.7K	1	
R342		ERJ6GEYG683	M.RESISTOR CH 1/10W 68K	1	
R344,45		ERJ6GEYG103	M.RESISTOR CH 1/10W 10K	2	
R346		ERJ6GEYG102	M.RESISTOR CH 1/10W 1K	1	
R347		ERJ6GEYG470	M.RESISTOR CH 1/10W 47	1	
R348		ERJ6GEYG222	M.RESISTOR CH 1/10W 2.2K	1	
R349		ERJ6GEYG470	M.RESISTOR CH 1/10W 47	1	
R350		ERJ6GEYG152	M.RESISTOR CH 1/10W 1.5K	1	
R351		ERJ6GEYG391	M.RESISTOR CH 1/10W 390	1	
R355		ERJ6GEYG470	M.RESISTOR CH 1/10W 47	1	
R356		ERJ6GEYG222	M.RESISTOR CH 1/10W 2.2K	1	
R357,58		VRE0034E102	M.RESISTOR CH 1/10W 1K	2	
R359		VRE0034E271	M.RESISTOR CH 1/10W 270	1	
R360		ERJ6GEYG272	M.RESISTOR CH 1/10W 2.7K	1	
R364		ERJ6GEYG391	M.RESISTOR CH 1/10W 390	1	
R365		ERJ6GEYG273	M.RESISTOR CH 1/10W 27K	1	
R366		ERJ6GEYG272	M.RESISTOR CH 1/10W 2.7K	1	
R367		ERJ6GEYG682	M.REISITOR CH 1/10W 6.8K	1	
R368		ERJ6GEYG272	M.RESISTOR CH 1/10W 2.7K	1	
R369		ERJ6GEYG222	M.RESISTOR CH 1/10W 2.2K	1	
R370		ERJ6GEYG101	M.RESISTOR CH 1/10W 100	1	
R371		ERJ6GEYG683	M.RESISTOR CH 1/10W 68K	1	
R372		ERJ6GEYG332	M.RESISTOR CH 1/10W 3.3K	1	
R373		ERJ6GEYG562	M.RESISTOR CH 1/10W 5.6K	1	
R374,75		ERJ6GEYG223	M.RESISTOR CH 1/10W 22K	2	
R376		ERJ6GEYG332	M.RESISTOR CH 1/10W 3.3K	1	
R396		ERJ6GEYG332	M.RESISTOR CH 1/10W 3.3K	1	
R397		ERJ6GEYG472	M.RESISTOR CH 1/10W 4.7K	1	
R398		ERJ6GEYG153	M.RESISTOR CH 1/10W 15K	1	
R399		ERJ6GEYG221	M.RESISTOR CH 1/10W 220	1	
R400		ERJ6GEYG472	M.RESISTOR CH 1/10W 4.7K	1	
R401,02		ERJ6GEYG102	M.RESISTOR CH 1/10W 1K	2	
R404		ERJ6GEYG102	M.RESISTOR CH 1/10W 1K	1	
R405,06		ERJ6GEYG221	M.RESISTOR CH 1/10W 220	2	
R409		VRE0034E391	M.RESISTOR CH 1/10W 390	1	
R410		ERJ6GEY0R00	M.RESISTOR CH 1/10W 0	1	
R411		ERJ6GEYG221	M.RESISTOR CH 1/10W 220	1	
R412		VRE0034E391	M.RESISTOR CH 1/10W 390	1	
R413-16		ERJ6GEYG223	M.RESISTOR CH 1/10W 22K	4	
R417		VRE0034E391	M.RESISTOR CH 1/10W 390	1	
R418		ERJ6GEYG151	M.RESISTOR CH 1/10W 150	1	

Ref.No.		Part No.	Part Name & Description	Pcs	Remarks
R421		ERJ6GEYG221	M.RESISTOR CH 1/10W 220	1	
R422		VRE0034E391	M.RESISTOR CH 1/10W 390	1	
R423		ERJ6GEY0R00	M.RESISTOR CH 1/10W 0	1	
R424		ERJ6GEYG101	M.RESISTOR CH 1/10W 100	1	
R425,26		ERJ6GEYG470	M.RESISTOR CH 1/10W 47	2	
R427		ERJ6GEYG221	M.RESISTOR CH 1/10W 220	1	
R428		VRE0034E391	M.RESISTOR CH 1/10W 390	1	
R429		ERJ6GEYG392	M.RESISTOR CH 1/10W 3.9K	1	
R430		ERJ6GEYG102	M.RESISTOR CH 1/10W 1K	1	
R431		VRE0034E821	M.RESISTOR CH 1/10W 820	1	
R432,33		ERJ6GEYG102	M.RESISTOR CH 1/10W 1K	2	
R434		ERJ6GEYG123	M.RESISTOR CH 1/10W 12K	1	
R435		ERJ6GEYG682	M.REISITOR CH 1/10W 6.8K	1	
R436		ERJ6GEYG822	M.RESISTOR CH 1/10W 8.2K	1	
R437		ERJ6GEYG123	M.RESISTOR CH 1/10W 12K	1	
R438		ERJ6GEYG152	M.RESISTOR CH 1/10W 1.5K	1	
R439		ERJ6GEYG102	M.RESISTOR CH 1/10W 1K	1	
R440		VRE0034E821	M.RESISTOR CH 1/10W 820	1	
R441		ERJ6GEYG102	M.RESISTOR CH 1/10W 1K	1	
R442		ERJ6GEYG222	M.RESISTOR CH 1/10W 2.2K	1	
R443		ERJ6GEY0R00	M.RESISTOR CH 1/10W 0	1	
R501		ERJ6GEYG102	M.RESISTOR CH 1/10W 1K	1	
R502		ERJ6GEYG330	M.RESISTOR CH 1/10W 33	1	
R503,04		ERJ6GEYG222	M.RESISTOR CH 1/10W 2.2K	2	
R505,06		ERJ6GEYG102	M.RESISTOR CH 1/10W 1K	2	
R507		ERJ6GEYG331	M.RESISTOR CH 1/10W 330	1	
R508		ERJ6GEYG221	M.RESISTOR CH 1/10W 220	1	
R509		ERJ6GEYG152	M.RESISTOR CH 1/10W 1.5K	1	
R510		ERJ6GEYG391	M.RESISTOR CH 1/10W 390	1	
R511		ERJ6GEYG102	M.RESISTOR CH 1/10W 1K	1	
R512		ERJ6GEYG152	M.RESISTOR CH 1/10W 1.5K	1	
R513		ERJ6GEYG683	M.RESISTOR CH 1/10W 68K	1	
R514		ERJ6GEYG182	M.RESISTOR CH 1/10W 1.8K	1	
R515		ERJ6GEYG101	M.RESISTOR CH 1/10W 100	1	
R516		ERJ6GEYG152	M.RESISTOR CH 1/10W 1.5K	1	
R517		ERJ6GEYG470	M.RESISTOR CH 1/10W 47	1	
R518		ERJ6GEYG273	M.RESISTOR CH 1/10W 27K	1	
R519		ERJ6GEYG331	M.RESISTOR CH 1/10W 330	1	
R520		ERJ6GEYG681	M.RESISTOR CH 1/10W 680	1	
R521		ERJ6GEYG391	M.RESISTOR CH 1/10W 390	1	
R522		ERJ6GEYG102	M.RESISTOR CH 1/10W 1K	1	
R523		ERJ6GEYG681	M.RESISTOR CH 1/10W 680	1	
R524		ERJ6GEYG561	M.RESISTOR CH 1/10W 560	1	
R525		ERJ6GEYG182	M.RESISTOR CH 1/10W 1.8K	1	
R526		ERJ6GEYG470	M.RESISTOR CH 1/10W 47	1	
R527		ERJ6GEYG182	M.RESISTOR CH 1/10W 1.8K	1	
R528		VRE0034E151	M.RESISTOR CH 1/10W 150	1	
R529		ERJ6GEYG152	M.RESISTOR CH 1/10W 1.5K	1	
R530		ERJ6GEYG470	M.RESISTOR CH 1/10W 47	1	
R542		ERJ6GEYG821	M.RESISTOR CH 1/10W 820	1	
R543		ERJ6GEYG392	M.RESISTOR CH 1/10W 3.9K	1	
R544		ERJ6GEYG561	M.RESISTOR CH 1/10W 560	1	
R545		ERJ6GEYG391	M.RESISTOR CH 1/10W 390	1	
R546		ERJ6GEYG561	M.RESISTOR CH 1/10W 560	1	
R547		ERJ6GEYG391	M.RESISTOR CH 1/10W 390	1	
R549		ERJ6GEYG273	M.RESISTOR CH 1/10W 27K	1	
R551		ERJ6GEYG391	M.RESISTOR CH 1/10W 390	1	
R552		ERJ6GEYG102	M.RESISTOR CH 1/10W 1K	1	
R553		ERJ6GEYG681	M.RESISTOR CH 1/10W 680	1	
R554		ERJ6GEYG561	M.RESISTOR CH 1/10W 560	1	
R555		ERJ6GEYG182	M.RESISTOR CH 1/10W 1.8K	1	
R556		ERJ6GEYG470	M.RESISTOR CH 1/10W 47	1	
R557		ERJ6GEYG182	M.RESISTOR CH 1/10W 1.8K	1	
R558		VRE0034E151	M.RESISTOR CH 1/10W 150	1	
R559		ERJ6GEYG152	M.RESISTOR CH 1/10W 1.5K	1	
R560		ERJ6GEYG470	M.RESISTOR CH 1/10W 47	1	
R564		ERJ6GEYG102	M.RESISTOR CH 1/10W 1K	1	
R565		ERJ6GEYG222	M.RESISTOR CH 1/10W 2.2K	1	
R566		ERJ6GEYG182	M.RESISTOR CH 1/10W 1.8K	1	
R567		ERJ6GEYG221	M.RESISTOR CH 1/10W 220	1	
R568		ERJ6GEYG470	M.RESISTOR CH 1/10W 47	1	
R569		ERJ6GEYG153	M.RESISTOR CH 1/10W 15K	1	
R570		ERJ6GEYG223	M.RESISTOR CH 1/10W 22K	1	
R571		ERJ6GEYG470	M.RESISTOR CH 1/10W 47	1	
R572		ERJ6GEYG472	M.RESISTOR CH 1/10W 4.7K	1	

Refer to the P.C.BOARDS LIST, page 6-1-1, before using this page.

Ref.No.		Part No.	Part Name & Description	Pcs	Remarks
R573,74		ERJ6GEYG102	M.RESISTOR CH 1/10W 1K	2	
R576		ERJ6GEYG103	M.RESISTOR CH 1/10W 10K	1	
R577		ERJ6GEYG102	M.RESISTOR CH 1/10W 1K	1	
R578		ERJ6GEYG472	M.RESISTOR CH 1/10W 4.7K	1	
R579,80		ERJ6GEYG121	M.RESISTOR CH 1/10W 120	2	
R581,82		ERJ6GEYG821	M.RESISTOR CH 1/10W 820	2	
R583		ERJ6GEYG470	M.RESISTOR CH 1/10W 47	1	
R584		ERJ6GEYG153	M.RESISTOR CH 1/10W 15K	1	
R585		ERJ6GEYG223	M.RESISTOR CH 1/10W 22K	1	
R586		ERJ6GEYG470	M.RESISTOR CH 1/10W 47	1	
R587		ERJ6GEYG472	M.RESISTOR CH 1/10W 4.7K	1	
R588		ERJ6GEYG102	M.RESISTOR CH 1/10W 1K	1	
R590		ERJ6GEYG103	M.RESISTOR CH 1/10W 10K	1	
R591		ERJ6GEYG102	M.RESISTOR CH 1/10W 1K	1	
R592		ERJ6GEYG472	M.RESISTOR CH 1/10W 4.7K	1	
R593,94		ERJ6GEYG121	M.RESISTOR CH 1/10W 120	2	
R595,96		ERJ6GEYG821	M.RESISTOR CH 1/10W 820	2	
R597		ERJ6GEYG102	M.RESISTOR CH 1/10W 1K	1	
R598		ERJ6GEYG103	M.RESISTOR CH 1/10W 10K	1	
R599		ERJ6GEYG822	M.RESISTOR CH 1/10W 8.2K	1	
R600		ERJ6GEYG102	M.RESISTOR CH 1/10W 1K	1	
R601,02		VRE0034E301	M.RESISTOR CH 1/10W 300	2	
R603		ERJ6GEYG152	M.RESISTOR CH 1/10W 1.5K	1	
R604		ERJ6GEYG151	M.RESISTOR CH 1/10W 150	1	
R605		ERJ6GEYG102	M.RESISTOR CH 1/10W 1K	1	
R606		ERJ6GEYG182	M.RESISTOR CH 1/10W 1.8K	1	
R607		ERJ6GEYG332	M.RESISTOR CH 1/10W 3.3K	1	
R608		ERJ6GEYG470	M.RESISTOR CH 1/10W 47	1	
R609,10		ERJ6GEYG122	M.RESISTOR CH 1/10W 1.2K	2	
R611		ERJ6GEY0R00	M.RESISTOR CH 1/10W 0	1	
R612		ERJ6GEYG272	M.RESISTOR CH 1/10W 2.7K	1	
R613		ERJ6GEYG182	M.RESISTOR CH 1/10W 1.8K	1	
R614		ERJ6GEYG392	M.RESISTOR CH 1/10W 3.9K	1	
R615		ERJ6GEYG151	M.RESISTOR CH 1/10W 150	1	
R616		ERJ6GEYG222	M.RESISTOR CH 1/10W 2.2K	1	
R617		ERJ6GEYG330	M.RESISTOR CH 1/10W 33	1	
R618		ERJ6GEYG222	M.RESISTOR CH 1/10W 2.2K	1	
R619		ERJ6GEYG102	M.RESISTOR CH 1/10W 1K	1	
R620		ERJ6GEYG271	M.RESISTOR CH 1/10W 270	1	
R621		ERJ6GEYG821	M.RESISTOR CH 1/10W 820	1	
R622		ERJ6GEYG152	M.RESISTOR CH 1/10W 1.5K	1	
R623		ERJ6GEYG470	M.RESISTOR CH 1/10W 47	1	
R630		ERJ6GEYG272	M.RESISTOR CH 1/10W 2.7K	1	
R633		ERJ6GEY0R00	M.RESISTOR CH 1/10W 0	1	
R634		ERJ6GEYG683	M.RESISTOR CH 1/10W 68K	1	
R635		ERJ6GEYG104	M.RESISTOR CH 1/10W 100K	1	
R636		ERJ6GEYG562	M.RESISTOR CH 1/10W 5.6K	1	
R637		ERJ6GEYG183	M.RESISTOR CH 1/10W 18K	1	
R642		ERJ6GEYG332	M.RESISTOR CH 1/10W 3.3K	1	
R643		ERJ6GEYG822	M.RESISTOR CH 1/10W 8.2K	1	
R644		ERJ6GEYG133	M.RESISTOR CH 1/10W 13K	1	
R645		ERJ6GEYG182	M.RESISTOR CH 1/10W 1.8K	1	
R646		ERJ6GEYG681	M.RESISTOR CH 1/10W 680	1	
R647		ERJ6GEYG471	M.RESISTOR CH 1/10W 470	1	
R648,49		ERJ6GEYG473	M.RESISTOR CH 1/10W 47K	2	
R650		ERJ6GEYG221	M.RESISTOR CH 1/10W 220	1	
R651		ERJ6GEYG682	M.REISITOR CH 1/10W 6.8K	1	
R652		ERJ6GEYG182	M.RESISTOR CH 1/10W 1.8K	1	
R653		ERJ6GEYG122	M.RESISTOR CH 1/10W 1.2K	1	
R654,55		ERJ6GEYG101	M.RESISTOR CH 1/10W 100	2	
R656		ERJ6GEYG122	M.RESISTOR CH 1/10W 1.2K	1	
R657		ERJ6GEYG182	M.RESISTOR CH 1/10W 1.8K	1	
R658		ERJ6GEYG102	M.RESISTOR CH 1/10W 1K	1	
R659		ERJ6GEYG681	M.RESISTOR CH 1/10W 680	1	
R660		ERJ6GEYG102	M.RESISTOR CH 1/10W 1K	1	
R661		ERJ6GEYG222	M.RESISTOR CH 1/10W 2.2K	1	
R662		ERJ6GEYG182	M.RESISTOR CH 1/10W 1.8K	1	
R663		ERJ6GEYG222	M.RESISTOR CH 1/10W 2.2K	1	
R664		ERJ6GEYG682	M.REISITOR CH 1/10W 6.8K	1	
R665		ERJ6GEYG122	M.RESISTOR CH 1/10W 1.2K	1	
R666		ERJ6GEYG102	M.RESISTOR CH 1/10W 1K	1	
R667		ERJ6GEYG182	M.RESISTOR CH 1/10W 1.8K	1	
R668		ERJ6GEYG102	M.RESISTOR CH 1/10W 1K	1	
R669		ERJ6GEYG681	M.RESISTOR CH 1/10W 680	1	
R670		ERJ6GEYG331	M.RESISTOR CH 1/10W 330	1	
R671		ERJ6GEYG152	M.RESISTOR CH 1/10W 1.5K	1	
R672,73		ERJ6GEYG102	M.RESISTOR CH 1/10W 1K	2	
R674		ERJ6GEYG561	M.RESISTOR CH 1/10W 560	1	
R675		ERJ6GEY0R00	M.RESISTOR CH 1/10W 0	1	
R676		ERJ6GEYG152	M.RESISTOR CH 1/10W 1.5K	1	
R677		ERJ6GEYG102	M.RESISTOR CH 1/10W 1K	1	
R678		ERJ6GEYG152	M.RESISTOR CH 1/10W 1.5K	1	
R679		ERJ6GEYG102	M.RESISTOR CH 1/10W 1K	1	
R680		ERJ6GEYG561	M.RESISTOR CH 1/10W 560	1	
R681		ERJ6GEYG330	M.RESISTOR CH 1/10W 33	1	
R682		ERJ6GEYG681	M.RESISTOR CH 1/10W 680	1	
R683		ERJ6GEYG124	M.RESISTOR CH 1/10W 120K	1	
R684		ERJ6GEYG152	M.RESISTOR CH 1/10W 1.5K	1	
R685		ERJ6GEYG102	M.RESISTOR CH 1/10W 1K	1	
R686		ERJ6GEYG181	M.RESISTOR CH 1/10W 180	1	
R687		ERJ6GEYG102	M.RESISTOR CH 1/10W 1K	1	
R688		ERJ6GEYG561	M.RESISTOR CH 1/10W 560	1	
R689		ERJ6GEYG152	M.RESISTOR CH 1/10W 1.5K	1	
R690,91		ERJ6GEYG122	M.RESISTOR CH 1/10W 1.2K	2	
R692,93		ERJ6GEYG470	M.RESISTOR CH 1/10W 47	2	
R694,95		ERJ6GEYG102	M.RESISTOR CH 1/10W 1K	2	
R696,97		ERJ6GEYG122	M.RESISTOR CH 1/10W 1.2K	2	
R698,99		ERJ6GEYG470	M.RESISTOR CH 1/10W 47	2	
R700,01		ERJ6GEYG102	M.RESISTOR CH 1/10W 1K	2	
R702		ERJ6GEYG103	M.RESISTOR CH 1/10W 10K	1	
R703		ERJ6GEYG472	M.RESISTOR CH 1/10W 4.7K	1	
R704-07		ERJ6GEYG102	M.RESISTOR CH 1/10W 1K	4	
R709		ERJ6GEY0R00	M.RESISTOR CH 1/10W 0	1	
R711		ERJ6GEY0R00	M.RESISTOR CH 1/10W 0	1	
R714,15		ERJ6GEY0R00	M.RESISTOR CH 1/10W 0	2	
R716		ERJ6GEYG101	M.RESISTOR CH 1/10W 100	1	
R717		ERJ6GEYG122	M.RESISTOR CH 1/10W 1.2K	1	
R718		ERJ6GEYG154	M.RESISTOR CH 1/10W 150K	1	
R719		ERJ6GEYG102	M.RESISTOR CH 1/10W 1K	1	
R720		ERJ6GEYG681	M.RESISTOR CH 1/10W 680	1	
R721		ERJ6GEYG470	M.RESISTOR CH 1/10W 47	1	
R722		ERJ6GEYG182	M.RESISTOR CH 1/10W 1.8K	1	
R723		VRE0034E151	M.RESISTOR CH 1/10W 150	1	
R724		ERJ6GEYG152	M.RESISTOR CH 1/10W 1.5K	1	
R725		ERJ6GEYG470	M.RESISTOR CH 1/10W 47	1	
R726		ERJ6GEYG472	M.RESISTOR CH 1/10W 4.7K	1	
R727		ERJ6GEYG103	M.RESISTOR CH 1/10W 10K	1	
R728		ERJ6GEYG561	M.RESISTOR CH 1/10W 560	1	
R729		ERJ6GEYG391	M.RESISTOR CH 1/10W 390	1	
R730		ERJ6GEYG561	M.RESISTOR CH 1/10W 560	1	
R731		ERJ6GEYG391	M.RESISTOR CH 1/10W 390	1	
R732		ERJ6GEYG561	M.RESISTOR CH 1/10W 560	1	
R733		ERJ6GEYG391	M.RESISTOR CH 1/10W 390	1	
R734		ERJ6GEYG561	M.RESISTOR CH 1/10W 560	1	
R735		ERJ6GEYG391	M.RESISTOR CH 1/10W 390	1	
R736		ERJ6GEYG101	M.RESISTOR CH 1/10W 100	1	
R737		ERJ6GEYG122	M.RESISTOR CH 1/10W 1.2K	1	
R739,40		ERJ6GEYG152	M.RESISTOR CH 1/10W 1.5K	2	
R741		ERJ6GEYG105	M.RESISTOR CH 1/10W 1M	1	
R742		ERJ6GEYG122	M.RESISTOR CH 1/10W 1.2K	1	
R743		ERJ6GEYG472	M.RESISTOR CH 1/10W 4.7K	1	
R744		ERJ6GEY0R00	M.RESISTOR CH 1/10W 0	1	
R800		ERJ6GEYG223	M.RESISTOR CH 1/10W 22K	1	
R801		ERJ6GEYG562	M.RESISTOR CH 1/10W 5.6K	1	
R802		ERJ6GEYG331	M.RESISTOR CH 1/10W 330	1	
R803		ERJ6GEYG103	M.RESISTOR CH 1/10W 10K	1	
R804		ERJ6GEYG183	M.RESISTOR CH 1/10W 18K	1	
R805		ERJ6GEYG102	M.RESISTOR CH 1/10W 1K	1	
R806		ERJ6GEYG472	M.RESISTOR CH 1/10W 4.7K	1	
R807		ERJ6GEYG152	M.RESISTOR CH 1/10W 1.5K	1	
R808-10		ERJ6GEYG122	M.RESISTOR CH 1/10W 1.2K	3	
R811		ERJ6GEYG222	M.RESISTOR CH 1/10W 2.2K	1	
R812-14		ERJ6GEYG122	M.RESISTOR CH 1/10W 1.2K	3	
R815		ERJ6GEYG222	M.RESISTOR CH 1/10W 2.2K	1	
R816		ERJ6GEYG122	M.RESISTOR CH 1/10W 1.2K	1	
R817		ERJ6GEYG392	M.RESISTOR CH 1/10W 3.9K	1	
R819,20		ERJ6GEYG103	M.RESISTOR CH 1/10W 10K	2	
R821		ERJ6GEYG392	M.RESISTOR CH 1/10W 3.9K	1	
R822,23		ERJ6GEYG103	M.RESISTOR CH 1/10W 10K	2	
R826		ERJ6GEYG153	M.RESISTOR CH 1/10W 15K	1	

Refer to the P.C.BOARDS LIST, page 6-1-1, before using this page.

Ref.No.		Part No.	Part Name & Description	Pcs	Remarks
R827		ERJ6GEYG392	M.RESISTOR CH 1/10W 3.9K	1	
R828		ERJ6GEYG562	M.RESISTOR CH 1/10W 5.6K	1	
R829		ERJ6GEYG103	M.RESISTOR CH 1/10W 10K	1	
R830		ERJ6GEYG122	M.RESISTOR CH 1/10W 1.2K	1	
R831		ERJ6GEYG222	M.RESISTOR CH 1/10W 2.2K	1	
R832		ERJ6GEYG392	M.RESISTOR CH 1/10W 3.9K	1	
R833		ERJ6GEYG122	M.RESISTOR CH 1/10W 1.2K	1	
R834		ERJ6GEYG182	M.RESISTOR CH 1/10W 1.8K	1	
R835		ERJ6GEYG392	M.RESISTOR CH 1/10W 3.9K	1	
R836		ERJ6GEYG682	M.REISITOR CH 1/10W 6.8K	1	
R837		ERJ6GEYG392	M.RESISTOR CH 1/10W 3.9K	1	
R838		ERJ6GEYG682	M.REISITOR CH 1/10W 6.8K	1	
R839,40		ERJ6GEYG392	M.RESISTOR CH 1/10W 3.9K	2	
R841		ERJ6GEYG682	M.REISITOR CH 1/10W 6.8K	1	
R842		ERJ6GEYG392	M.RESISTOR CH 1/10W 3.9K	1	
R843		ERJ6GEYG682	M.REISITOR CH 1/10W 6.8K	1	
R844-46		ERJ6GEYG392	M.RESISTOR CH 1/10W 3.9K	3	
R847		ERJ6GEY0R00	M.RESISTOR CH 1/10W 0	1	
R848		ERJ6GEYG102	M.RESISTOR CH 1/10W 1K	1	
R849		ERJ6GEY0R00	M.RESISTOR CH 1/10W 0	1	
R850		ERJ6GEYG102	M.RESISTOR CH 1/10W 1K	1	
R851		ERJ6GEY0R00	M.RESISTOR CH 1/10W 0	1	
R852		ERJ6GEYG102	M.RESISTOR CH 1/10W 1K	1	
R853		ERJ6GEY0R00	M.RESISTOR CH 1/10W 0	1	
R854		ERJ6GEYG102	M.RESISTOR CH 1/10W 1K	1	
R855		ERJ6GEY0R00	M.RESISTOR CH 1/10W 0	1	
R856		ERJ6GEYG102	M.RESISTOR CH 1/10W 1K	1	
R857		ERJ6GEY0R00	M.RESISTOR CH 1/10W 0	1	
R858		ERJ6GEYG102	M.RESISTOR CH 1/10W 1K	1	
R859-62		ERJ6GEY0R00	M.RESISTOR CH 1/10W 0	4	
R867		ERJ6GEYG104	M.RESISTOR CH 1/10W 100K	1	
R868		ERJ6GEYG562	M.RESISTOR CH 1/10W 5.6K	1	
R869		ERJ6GEYG273	M.RESISTOR CH 1/10W 27K	1	
R870		ERJ6GEYG472	M.RESISTOR CH 1/10W 4.7K	1	
R871		ERJ6GEYG562	M.RESISTOR CH 1/10W 5.6K	1	
R872		ERJ6GEYG273	M.RESISTOR CH 1/10W 27K	1	
R873		ERJ6GEY0R00	M.RESISTOR CH 1/10W 0	1	
R876		ERJ6GEY0R00	M.RESISTOR CH 1/10W 0	1	
R878		ERJ6GEY0R00	M.RESISTOR CH 1/10W 0	1	
R880		ERJ6GEY0R00	M.RESISTOR CH 1/10W 0	1	
R882		ERJ6GEY0R00	M.RESISTOR CH 1/10W 0	1	
R883,84		ERJ6GEYG103	M.RESISTOR CH 1/10W 10K	2	
R886,87		ERJ6GEY0R00	M.RESISTOR CH 1/10W 0	2	
R889,90		ERJ6GEYG392	M.RESISTOR CH 1/10W 3.9K	2	
R891		ERJ6GEYG563	M.RESISTOR CH 1/10W 56K	1	
R892		ERJ6GEYG472	M.RESISTOR CH 1/10W 4.7K	1	
R893		ERJ6GEYG272	M.RESISTOR CH 1/10W 2.7K	1	
R894		ERJ6GEYG102	M.RESISTOR CH 1/10W 1K	1	
R895		ERJ6GEYG103	M.RESISTOR CH 1/10W 10K	1	
R896		ERJ6GEYG122	M.RESISTOR CH 1/10W 1.2K	1	
R897		ERJ6GEYG222	M.RESISTOR CH 1/10W 2.2K	1	
R898,99		ERJ6GEYG273	M.RESISTOR CH 1/10W 27K	2	
R900		ERJ6GEYG332	M.RESISTOR CH 1/10W 3.3K	1	
R901-05		ERJ6GEYG103	M.RESISTOR CH 1/10W 10K	5	
R906		ERJ6GEYG224	M.RESISTOR CH 1/10W 220K	1	
R907-09		ERJ6GEYG103	M.RESISTOR CH 1/10W 10K	3	
R910		ERJ6GEYG152	M.RESISTOR CH 1/10W 1.5K	1	
R911		ERJ6GEYG392	M.RESISTOR CH 1/10W 3.9K	1	
R912-16		ERJ6GEYG103	M.RESISTOR CH 1/10W 10K	5	
R917		ERJ6GEYG562	M.RESISTOR CH 1/10W 5.6K	1	
R925,26		ERJ6GEYG122	M.RESISTOR CH 1/10W 1.2K	2	
R928		ERJ6GEYG562	M.RESISTOR CH 1/10W 5.6K	1	
R929,30		ERJ6GEYG392	M.RESISTOR CH 1/10W 3.9K	2	
R1001		ERJ6GEYG681	M.RESISTOR CH 1/10W 680	1	
R1002		ERJ6GEYG621	M.RESISTOR CH 1/10W 620	1	
SW201		VSS0207	SWITCH	1	
SW202,03		VJP1990	CONNECTOR	2	
SW800		VSS0126	SWITCH	1	
SW801		VJP1990	CONNECTOR	1	
SWS801		VJS1990	CONNECTOR	1	

Ref.No.		Part No.	Part Name & Description	Pcs	Remarks
TH501-04		ERTD2FGL102S	THERMISTOR	4	
TP1-P4		VJR0646	TEST POINT	4	
TP6,P7		VJR0646	TEST POINT	2	
TP201-04		VJR0646	TEST POINT	4	
TP206		VJR0646	TEST POINT	1	
TP501-03		VJR0646	TEST POINT	3	
TP505-07		VJR0646	TEST POINT	3	
TP800-03		VJR0646	TEST POINT	4	
TP805		VJR0646	TEST POINT	1	
TPG1,G2		VJR0646	TEST POINT	2	
TPG201		VJR0646	TEST POINT	1	
TPG501		VJR0646	TEST POINT	1	
VC201		ECV1ZW20X60	V.CAPACITOR 20P	1	
VC501		ECV1ZW30X53	V.CAPACITOR 30P	1	
VR1		VRV0110B502	V.RESISTOR 5K	1	FOR VEP80632A
VR1		VRV0109B201	V.RESISTOR 200	1	FOR VEP88063C
VR2		VRV0110B502	V.RESISTOR 5K	1	FOR VEP80632A
VR2		VRV0109B502	V.RESISTOR 5K	1	FOR VEP88063C
VR3		VRV0109B501	V.RESISTOR 500	1	
VR4		VRV0109B502	V.RESISTOR 5K	1	
VR200		VRV0064B501	V.RESISTOR 500	1	
VR201		VRV0064B503	V.RESISTOR 50K	1	
VR202		VRV0064B103	V.RESISTOR 10K	1	
VR203		VRV0109B501	V.RESISTOR 500	1	
VR204		VRV0109B503	V.RESISTOR 50K	1	
VR205		VRV0109B501	V.RESISTOR 500	1	
VR206		VRV0109B503	V.RESISTOR 50K	1	
VR207		VRV0109B201	V.RESISTOR 200	1	
VR208,09		VRV0109B501	V.RESISTOR 500	2	
VR210-13		VRV0109B102	V.RESISTOR 1K	4	
VR501		VRV0109B501	V.RESISTOR 500	1	
VR502		VRV0109B503	V.RESISTOR 50K	1	
VR503-06		VRV0064B503	V.RESISTOR 50K	4	
VR507		VRV0109B201	V.RESISTOR 200	1	
VR508,09		VRV0109B101	V.RESISTOR 100	2	
VR510		VRV0109B203	V.RESISTOR 20K	1	
VR511		VRV0109B502	V.RESISTOR 5K	1	
VR512		VRV0064B503	V.RESISTOR 50K	1	
VR513,14		VRV0109B102	V.RESISTOR 1K	2	
VR515,16		VRV0109B501	V.RESISTOR 500	2	
VR517		VRV0064B503	V.RESISTOR 50K	1	
VR800,01		VRV0109B202	V.RESISTOR 2K	2	
VR802,03		VRV0109B203	V.RESISTOR 20K	2	
			MISCELLANEOUS		
		VJR0421	PIN	7	
		VJR0422	PIN	3	
		VML2143	CARD PULLER	1	
		VML2144	CARD PULLER	1	
		VMS4174	PIN	6	
		VMZ1547	BARRIER	1	
		VSC3056	SHIELD CASE	1	
		VXA3966	P.C.B. SHIELD PLATE	1	
		XNG26E	NUT	4	
		XYNV3+K6FR	SCREW	1	
		XYN26+C12	SCREW	4	

Refer to the P.C.BOARDS LIST, page 6-1-1, before using this page.

Ref.No.		Part No.	Part Name & Description	Pcs	Remarks
	■	VEP83098A	P.C.BOARD W/COMPONENT		FOR AU-65-P
			W3 MOD & DEMOD		
			CAPACITORS		
C1,C2		ECEA1CU101	E.CAPACITOR 16V 100U	2	
C3		ECUM1E104ZFN	C.CAPACITOR CH 25V 0.1U	1	
C4		ECUM1H100DCN	C.CAPACITOR CH 50V 10P	1	
C5		ECUM1H020CCN	C.CAPACITOR CH 50V 2P	1	
C6		ECUM1H080DCN	C.CAPACITOR CH 50V 80P	1	
C7		ECUM1E104ZFN	C.CAPACITOR CH 25V 0.1U	1	
C8		VCM0021	M.CAPACITOR	1	
C9		VCM0023	M.CAPACITOR 379P	1	
C10,11		ECUM1E104ZFN	C.CAPACITOR CH 25V 0.1U	2	
C12,13		ECUM1H103KBN	C.CAPACITOR CH 50V 0.01U	2	
C21		ECUM1H470JCN	C.CAPACITOR CH 50V 47P	1	
C22		ECUM1H330JCN	C.CAPACITOR CH 50V 33P	1	
C23		ECUM1H221JCN	C.CAPACITOR CH 50V 220P	1	
C24		ECUM1H104KBM	C.CAPACITOR CH 50V 0.1U	1	
C25		ECUM1C104KBN	C.CAPACITOR CH 16V 0.1U	1	
C26		ECUM1H331JCN	C.CAPACITOR CH 50V 330P	1	
C27		ECUM1E104ZFN	C.CAPACITOR CH 25V 0.1U	1	
C28		ECUM1H472KBN	C.CAPACITOR CH 50V 4700P	1	
C29,30		ECUM1E104ZFN	C.CAPACITOR CH 25V 0.1U	2	
C31		ECEA1HUR47	E.CAPACITOR 50V 0.47U	1	
C32		VCM0047	M.CAPACITOR	1	
C33		ECUM1H103KBN	C.CAPACITOR CH 50V 0.01U	1	
C34		ECEA1AU221	E.CAPACITOR 10V 220U	1	
C35		ECUM1E104ZFN	C.CAPACITOR CH 25V 0.1U	1	
C36		ECUM1H220JUN	C.CAPACITOR CH 50V 22P	1	
C37		ECUM1H103KBN	C.CAPACITOR CH 50V 0.01U	1	
C38		ECUM1E104ZFN	C.CAPACITOR CH 25V 0.1U	1	
C39		ECUM1H560JCN	C.CAPACITOR CH 50V 56P	1	
C40		ECUM1H151JCN	C.CAPACITOR CH 50V 150P	1	
C41		ECUM1H100DCN	C.CAPACITOR CH 50V 10P	1	
C42		ECEA1CU470	E.CAPACITOR 16V 47U	1	
C43,44		ECUM1H103KBN	C.CAPACITOR CH 50V 0.01U	2	
C45-47		ECUM1E104ZFN	C.CAPACITOR CH 25V 0.1U	3	
C48		ECUM1H103KBN	C.CAPACITOR CH 50V 0.01U	1	
C49		ECUM1H332KBN	C.CAPACITOR CH 50V 3300P	1	
C50,51		ECUM1H560JCN	C.CAPACITOR CH 50V 56P	2	
C52		ECUM1E104ZFN	C.CAPACITOR CH 25V 0.1U	1	
C54		ECUM1H471JCN	C.CAPACITOR CH 50V 470P	1	
C56		ECUM1E104ZFN	C.CAPACITOR CH 25V 0.1U	1	
C57		ECEA1CU101	E.CAPACITOR 16V 100U	1	
C60		ECUM1E104ZFN	C.CAPACITOR CH 25V 0.1U	1	
C61		ECEA1CU101	E.CAPACITOR 16V 100U	1	
C62		ECUM1E104ZFN	C.CAPACITOR CH 25V 0.1U	1	
C63		ECEA1CU101	E.CAPACITOR 16V 100U	1	
C64		ECUM1E104ZFN	C.CAPACITOR CH 25V 0.1U	1	
C65		ECSF1CE106	T.CAPACITOR 16V 10U	1	
C66		ECUM1E104ZFN	C.CAPACITOR CH 25V 0.1U	1	
C67		ECSF1CE106	T.CAPACITOR 16V 10U	1	
C68		ECUM1E104ZFN	C.CAPACITOR CH 25V 0.1U	1	
C69,70		ECSF1CE106	T.CAPACITOR 16V 10U	2	
C71		ECUM1E104ZFN	C.CAPACITOR CH 25V 0.1U	1	
C72		ECEA1CU101	E.CAPACITOR 16V 100U	1	
C73,74		ECUM1E104ZFN	C.CAPACITOR CH 25V 0.1U	2	
C201,02		ECEA1CU101	E.CAPACITOR 16V 100U	2	
C203		ECUM1H100DCN	C.CAPACITOR CH 50V 10P	1	
C204		ECUM1H020CCN	C.CAPACITOR CH 50V 2P	1	
C205,06		ECUM1E104ZFN	C.CAPACITOR CH 25V 0.1U	2	
C213		VCM0021	M.CAPACITOR	1	
C214		VCM0024	M.CAPACITOR 270P	1	
C215		ECUM1H180JCN	C.CAPACITOR CH 50V 18P	1	
C216		ECUM1H560JCN	C.CAPACITOR CH 50V 56P	1	
C217		ECUM1H103KBN	C.CAPACITOR CH 50V 0.01U	1	
C218,19		ECUM1E104ZFN	C.CAPACITOR CH 25V 0.1U	2	
C220,21		ECUM1H103KBN	C.CAPACITOR CH 50V 0.01U	2	
C222		ECEA1HUR47	E.CAPACITOR 50V 0.47U	1	
C223		ECUM1E104ZFN	C.CAPACITOR CH 25V 0.1U	1	
C224		ECUM1H271JCN	C.CAPACITOR CH 50V 270P	1	
C225		ECUM1H560JCN	C.CAPACITOR CH 50V 56P	1	
C226		VCM0046	M.CAPACITOR 229P	1	
C227		ECUM1E104ZFN	C.CAPACITOR CH 25V 0.1U	1	
C228		ECUM1H103KBN	C.CAPACITOR CH 50V 0.01U	1	
C229		ECEA1AU221	E.CAPACITOR 10V 220U	1	
C230		ECUM1E104ZFN	C.CAPACITOR CH 25V 0.1U	1	
C231		ECUM1H220JUN	C.CAPACITOR CH 50V 22P	1	
C232		ECUM1H103KBN	C.CAPACITOR CH 50V 0.01U	1	
C233		ECUM1H100DCN	C.CAPACITOR CH 50V 10P	1	
C234		ECUM1H220JCN	C.CAPACITOR CH 50V 22P	1	
C235		ECUM1H560JCN	C.CAPACITOR CH 50V 56P	1	
C236		ECUM1H060DCN	C.CAPACITOR CH 50V 6P	1	
C237		ECUM1H220JCN	C.CAPACITOR CH 50V 22P	1	
C238		ECUM1H180JCN	C.CAPACITOR CH 50V 18P	1	
C239		ECUM1H121JCN	C.CAPACITOR CH 50V 120P	1	
C240		ECUM1H100DCN	C.CAPACITOR CH 50V 10P	1	
C241		ECUM1H220JCN	C.CAPACITOR CH 50V 22P	1	
C242		ECUM1H221JCN	C.CAPACITOR CH 50V 220P	1	
C243		ECUM1E104ZFN	C.CAPACITOR CH 25V 0.1U	1	
C244		ECUM1H103KBN	C.CAPACITOR CH 50V 0.01U	1	
C245		ECEA1CU470	E.CAPACITOR 16V 47U	1	
C246-48		ECUM1E104ZFN	C.CAPACITOR CH 25V 0.1U	3	
C252,53		ECUM1H103KBN	C.CAPACITOR CH 50V 0.01U	2	
C254		ECEA1CU470	E.CAPACITOR 16V 47U	1	
C255		ECUM1H103KBN	C.CAPACITOR CH 50V 0.01U	1	
C256,57		ECUM1E104ZFN	C.CAPACITOR CH 25V 0.1U	2	
C258		ECUM1H220JCN	C.CAPACITOR CH 50V 22P	1	
C259		ECUM1H330JCN	C.CAPACITOR CH 50V 33P	1	
C260		ECKF1H103KB	C.CAPACITOR 50V 0.01U	1	
C302		ECUM1H103KBN	C.CAPACITOR CH 50V 0.01U	1	
C303		ECUM1H220JCN	C.CAPACITOR CH 50V 22P	1	
C304		ECUM1H103KBN	C.CAPACITOR CH 50V 0.01U	1	
C306		ECUM1H220JCN	C.CAPACITOR CH 50V 22P	1	
C307		ECEA1AU101	E.CAPACITOR 10V 100U	1	
C308,09		ECUM1H103KBN	C.CAPACITOR CH 50V 0.01U	2	
C310		ECEA1AU101	E.CAPACITOR 10V 100U	1	
C311		ECUM1H103KBN	C.CAPACITOR CH 50V 0.01U	1	
C316		ECUM1E104ZFN	C.CAPACITOR CH 25V 0.1U	1	
C322		ECUM1E104ZFN	C.CAPACITOR CH 25V 0.1U	1	
C325		ECUM1E104ZFN	C.CAPACITOR CH 25V 0.1U	1	
C342		ECUM1H103KBN	C.CAPACITOR CH 50V 0.01U	1	
C343		ECUM1H120JCN	C.CAPACITOR CH 50V 12P	1	
C344		ECUM1H121JCN	C.CAPACITOR CH 50V 120P	1	
C345		ECUM1H100DCN	C.CAPACITOR CH 50V 10P	1	
C346		ECUM1H103KBN	C.CAPACITOR CH 50V 0.01U	1	
C347,48		ECEA1AU101	E.CAPACITOR 10V 100U	2	
C349		ECUM1H103KBN	C.CAPACITOR CH 50V 0.01U	1	
C350		ECUM1H181JCN	C.CAPACITOR CH 50V 180P	1	
C351		ECUM1H221JCN	C.CAPACITOR CH 50V 220P	1	
C352		ECUM1H103KBN	C.CAPACITOR CH 50V 0.01U	1	
C353		ECUM1H101JCN	C.CAPACITOR CH 50V 100P	1	
C354,55		ECUM1H103KBN	C.CAPACITOR CH 50V 0.01U	2	
C356		ECUM1E104ZFN	C.CAPACITOR CH 25V 0.1U	1	
C357		ECEA1HU2R2	E.CAPACITOR 50V 2.2U	1	
C358		ECEA1AU101	E.CAPACITOR 10V 100U	1	
C377,78		ECUM1H103KBN	C.CAPACITOR CH 50V 0.01U	2	
C380		ECUM1E104ZFN	C.CAPACITOR CH 25V 0.1U	1	
C381		ECUM1H103KBN	C.CAPACITOR CH 50V 0.01U	1	
C382		ECUM1E104ZFN	C.CAPACITOR CH 25V 0.1U	1	
C383		ECEA1AU101	E.CAPACITOR 10V 100U	1	
C386		ECUM1H050DCN	C.CAPACITOR CH 50V 50P	1	
C387		ECUM1H100DCN	C.CAPACITOR CH 50V 10P	1	
C389		ECUM1H391JCN	C.CAPACITOR CH 50V 390P	1	
C391		ECUM1H560JCN	C.CAPACITOR CH 50V 56P	1	
C392		ECUM1H103KBN	C.CAPACITOR CH 50V 0.01U	1	
C393		ECEA1AU101	E.CAPACITOR 10V 100U	1	
C394		ECUM1H103KBN	C.CAPACITOR CH 50V 0.01U	1	
C395		ECUM1E104ZFN	C.CAPACITOR CH 25V 0.1U	1	
C396,97		ECUM1H103KBN	C.CAPACITOR CH 50V 0.01U	2	
C398		ECUM1H180JCN	C.CAPACITOR CH 50V 18P	1	
C399		ECUM1H103KBN	C.CAPACITOR CH 50V 0.01U	1	
C400		ECUM1E104ZFN	C.CAPACITOR CH 25V 0.1U	1	

Refer to the P.C.BOARDS LIST, page 6-1-1, before using this page.

Ref.No.		Part No.	Part Name & Description	Pcs	Remarks
C401-03		ECUM1H103KBN	C.CAPACITOR CH 50V 0.01U	3	
C404		ECEA1AU101	E.CAPACITOR 10V 100U	1	
C405-07		ECUM1E104ZFN	C.CAPACITOR CH 25V 0.1U	3	
C408,09		ECUM1H330JCN	C.CAPACITOR CH 50V 33P	2	
C410		ECEA1AU471	E.CAPACITOR 10V 470U	1	
C411		ECUM1E104ZFN	C.CAPACITOR CH 25V 0.1U	1	
C412		ECUM1H221JCN	C.CAPACITOR CH 50V 220P	1	
C413		ECEA1AU101	E.CAPACITOR 10V 100U	1	
C414		ECUM1H331JCN	C.CAPACITOR CH 50V 330P	1	
C415		ECUM1H470JCN	C.CAPACITOR CH 50V 47P	1	
C416		ECUM1H102JCN	C.CAPACITOR CH 50V 1000P	1	
C417,18		ECUM1E104ZFN	C.CAPACITOR CH 25V 0.1U	2	
C419		ECUM1H331JCN	C.CAPACITOR CH 50V 330P	1	
C420		ECUM1H220JCN	C.CAPACITOR CH 50V 22P	1	
C421		ECUM1H680JCN	C.CAPACITOR CH 50V 68P	1	
C422		ECUM1H330JCN	C.CAPACITOR CH 50V 33P	1	
C423		ECEA1AU101	E.CAPACITOR 10V 100U	1	
C424		ECEA1CU100	E.CAPACITOR 16V 10U	1	
C425		ECUM1H221JCN	C.CAPACITOR CH 50V 220P	1	
C426		VCM0044	M.CAPACITOR 130P	1	
C427		VCM0023	M.CAPACITOR 379P	1	
C428		ECUM1H680JCN	C.CAPACITOR CH 50V 68P	1	
C432		ECEA0JU221	E.CAPACITOR 6.3V 220U	1	
C433		ECUM1H050DCN	C.CAPACITOR CH 50V 50P	1	
C434		ECUM1H220JCN	C.CAPACITOR CH 50V 22P	1	
C435		ECUM1H020CCN	C.CAPACITOR CH 50V 2P	1	
C436,37		ECUM1E104ZFN	C.CAPACITOR CH 25V 0.1U	2	
C438		VCM0023	M.CAPACITOR 379P	1	
C439		VCM0057	M.CAPACITOR 169P	1	
C440		ECUM1H470JCN	C.CAPACITOR CH 50V 47P	1	
C441		ECUM1H103KBN	C.CAPACITOR CH 50V 0.01U	1	
C442,43		ECEA1CU221	E.CAPACITOR 16V 220U	2	
C444,45		ECUM1H103KBN	C.CAPACITOR CH 50V 0.01U	2	
C450		ECEA1AU101	E.CAPACITOR 10V 100U	1	
C453		ECUM1E104ZFN	C.CAPACITOR CH 25V 0.1U	1	
C467		ECUM1E104ZFN	C.CAPACITOR CH 25V 0.1U	1	
C468		ECUM1H103KBN	C.CAPACITOR CH 50V 0.01U	1	
C469		ECUM1H220JCN	C.CAPACITOR CH 50V 22P	1	
C701,02		ECUM1H103KBN	C.CAPACITOR CH 50V 0.01U	2	
C703		ECEA1AU101	E.CAPACITOR 10V 100U	1	
C704,05		ECUM1H103KBN	C.CAPACITOR CH 50V 0.01U	2	
C725		ECUM1H180JCN	C.CAPACITOR CH 50V 18P	1	
C726		ECUM1H103KBN	C.CAPACITOR CH 50V 0.01U	1	
C727		ECUM1E104ZFN	C.CAPACITOR CH 25V 0.1U	1	
C728		ECUM1H220JCN	C.CAPACITOR CH 50V 22P	1	
C729		ECUM1H121JCN	C.CAPACITOR CH 50V 120P	1	
C730,31		ECUM1H103KBN	C.CAPACITOR CH 50V 0.01U	2	
C732		ECUM1H101JCN	C.CAPACITOR CH 50V 100P	1	
C733		ECEA1AU101	E.CAPACITOR 10V 100U	1	
C734		ECUM1H331JCN	C.CAPACITOR CH 50V 330P	1	
C735		ECEA1AU101	E.CAPACITOR 10V 100U	1	
C736		ECUM1H103KBN	C.CAPACITOR CH 50V 0.01U	1	
C737		ECUM1H121JCN	C.CAPACITOR CH 50V 120P	1	
C738		ECUM1H103KBN	C.CAPACITOR CH 50V 0.01U	1	
C740-42		ECUM1H103KBN	C.CAPACITOR CH 50V 0.01U	3	
C744		ECUM1E104ZFN	C.CAPACITOR CH 25V 0.1U	1	
C745		ECUM1H103KBN	C.CAPACITOR CH 50V 0.01U	1	
C746		ECUM1E104ZFN	C.CAPACITOR CH 25V 0.1U	1	
C747		ECEA1AU101	E.CAPACITOR 10V 100U	1	
C749		ECUM1H561JCN	C.CAPACITOR CH 50V 560P	1	
C750		ECUM1H331JCN	C.CAPACITOR CH 50V 330P	1	
C751		ECUM1H221JCN	C.CAPACITOR CH 50V 220P	1	
C752		ECUM1H561JCN	C.CAPACITOR CH 50V 560P	1	
C753		ECUM1H390JCN	C.CAPACITOR CH 50V 39P	1	
C754		ECUM1H181JCN	C.CAPACITOR CH 50V 180P	1	
C755		ECUM1H330JCN	C.CAPACITOR CH 50V 33P	1	
C756		ECUM1H101JCN	C.CAPACITOR CH 50V 100P	1	
C757		ECUM1H330JCN	C.CAPACITOR CH 50V 33P	1	
C758		ECUM1H050DCN	C.CAPACITOR CH 50V 50P	1	
C759		ECUM1E104ZFN	C.CAPACITOR CH 25V 0.1U	1	
C760		ECUM1H100DCN	C.CAPACITOR CH 50V 10P	1	
C762		ECUM1H471JCN	C.CAPACITOR CH 50V 470P	1	
C764		ECUM1H680JCN	C.CAPACITOR CH 50V 68P	1	
C765,66		ECUM1H103KBN	C.CAPACITOR CH 50V 0.01U	2	
C767		ECEA1AU101	E.CAPACITOR 10V 100U	1	

Ref.No.		Part No.	Part Name & Description	Pcs	Remarks
C768,69		ECUM1H103KBN	C.CAPACITOR CH 50V 0.01U	2	
C770		ECUM1H220JCN	C.CAPACITOR CH 50V 22P	1	
C771		ECUM1H681JCN	C.CAPACITOR CH 50V 680P	1	
C772		ECUM1E104ZFN	C.CAPACITOR CH 25V 0.1U	1	
C773-75		ECUM1H103KBN	C.CAPACITOR CH 50V 0.01U	3	
C776		ECUM1E104ZFN	C.CAPACITOR CH 25V 0.1U	1	
C777		ECEA1AU101	E.CAPACITOR 10V 100U	1	
C778,79		ECUM1E104ZFN	C.CAPACITOR CH 25V 0.1U	2	
C780,81		ECUM1H470JCN	C.CAPACITOR CH 50V 47P	2	
C782		ECEA1AU471	E.CAPACITOR 10V 470U	1	
C783		ECUM1E104ZFN	C.CAPACITOR CH 25V 0.1U	1	
C784		ECUM1H221JCN	C.CAPACITOR CH 50V 220P	1	
C785		ECEA1AU101	E.CAPACITOR 10V 100U	1	
C786		ECUM1H121JCN	C.CAPACITOR CH 50V 120P	1	
C787		ECUM1H100DCN	C.CAPACITOR CH 50V 10P	1	
C788		ECUM1H331JCN	C.CAPACITOR CH 50V 330P	1	
C789,90		ECUM1E104ZFN	C.CAPACITOR CH 25V 0.1U	2	
C791		ECUM1H331JCN	C.CAPACITOR CH 50V 330P	1	
C792		ECUM1H220JCN	C.CAPACITOR CH 50V 22P	1	
C793		ECUM1H680JCN	C.CAPACITOR CH 50V 68P	1	
C794		ECUM1H330JCN	C.CAPACITOR CH 50V 33P	1	
C796		ECEA1CU100	E.CAPACITOR 16V 10U	1	
C797		VCM0046	M.CAPACITOR 229P	1	
C798		ECUM1H100DCN	C.CAPACITOR CH 50V 10P	1	
C799		ECEA0JU221	E.CAPACITOR 6.3V 220U	1	
C800		ECUM1H050DCN	C.CAPACITOR CH 50V 50P	1	
C801		ECUM1H020CCN	C.CAPACITOR CH 50V 2P	1	
C802		ECUM1H121JCN	C.CAPACITOR CH 50V 120P	1	
C803,04		ECUM1E104ZFN	C.CAPACITOR CH 25V 0.1U	2	
C805		ECUM1H470JCN	C.CAPACITOR CH 50V 47P	1	
C806		VCM0057	M.CAPACITOR 169P	1	
C807		VCM0024	M.CAPACITOR 270P	1	
C808		ECEA1CU221	E.CAPACITOR 16V 220U	1	
C810		ECEA1CU221	E.CAPACITOR 16V 220U	1	
C811,12		ECUM1H103KBN	C.CAPACITOR CH 50V 0.01U	2	
C817		ECEA1AU101	E.CAPACITOR 10V 100U	1	
C818		ECUM1H220JCN	C.CAPACITOR CH 50V 22P	1	
C821		ECUM1E104ZFN	C.CAPACITOR CH 25V 0.1U	1	
D1,D2		MA151K	DIODE	2	
D3		MA151WK	DIODE	1	
D201		MA151WK	DIODE	1	
D301		MA151WK	DIODE	1	
D303		MA151K	DIODE	1	
D305		MA151K	DIODE	1	
D306,07		MA151WK	DIODE	2	
D308,09		MA151WA	DIODE	2	
D701		MA151WK	DIODE	1	
D702,03		MA151K	DIODE	2	
D705		MA151K	DIODE	1	
D706		MA151WK	DIODE	1	
DL301		VLD0191	DELAY	1	
DL701		VLD0191	DELAY	1	
FL1		ELB5F100	FILTER	1	
FL201		ELB5F100	FILTER	1	
FL302		VLF0787	FILTER	1	
FL303		VLF0819	FILTER	1	
FL701		VLF0821	FILTER	1	
IC1		NE5539D	IC	1	
IC2		UPD4053BG	IC	1	
IC3		RC084M	IC	1	
IC4		RC082BM	IC	1	
IC5		AN6306S	IC	1	
IC6		MC14538BF	IC	1	

Refer to the P.C.BOARDS LIST, page 6-1-1, before using this page.

Ref.No.		Part No.	Part Name & Description	Pcs	Remarks
IC7		TC74HC221AF	IC	1	
IC9		AN79N09	IC	1	
IC10		AN79N09	IC	1	
IC11,12		AN79M05F	IC	2	
IC13		AN78M05F	IC	1	
IC14		AN78N05	IC	1	
IC15		AN78N09	IC	1	
IC16		AN78L05	IC	1	
IC17		AN78N09	IC	1	
IC201		NE5539D	IC	1	
IC202		TC74HC221AF	IC	1	
IC203		AN6306S	IC	1	
IC301		AN6308S	IC	1	
IC306		NJM1496M	IC	1	
IC307		UPD4053BG	IC	1	
IC310		AN6308S	IC	1	
IC311-15		10116D	IC	5	
IC316		SN74LS123NS	IC	1	
IC317		MC74HC00AF	IC	1	
IC319		NE5539D	IC	1	
IC326		RC082BM	IC	1	
IC701		AN6308S	IC	1	
IC705		NJM1496M	IC	1	
IC706		UPD4053BG	IC	1	
IC707		AN6308S	IC	1	
IC708-12		10116D	IC	5	
IC716		NE5539D	IC	1	
L1,L2		VLQEL05F101K	COIL 100UH	2	
L4		VLQEL05S151J	COIL 150UH	1	
L5		VLQEL05F101K	COIL 100UH	1	
L6		VLQEL05S1R5J	COIL 1.5UH	1	
L7		VLQEL05F101K	COIL 100UH	1	
L201,02		VLQEL05F101K	COIL 100UH	2	
L204		VLQEL05S561J	COIL 560UH	1	
L205		VLQEL05F101K	COIL 100UH	1	
L206		VLQEL05S4R7J	COIL 4.7UH	1	
L207		VLQEL05S6R8J	COIL 6.8UH	1	
L208		VLQEL05S3R9J	COIL 3.9UH	1	
L209		VLQEL05S390J	COIL 39UH	1	
L210		VLQEL05F101K	COIL 100UH	1	
L212		VLQEL05F101K	COIL 100UH	1	
L301		VLQEL05F101K	COIL 100UH	1	
L302,03		VLQEL05S150J	COIL 15UH	2	
L304		VLQEL05F101K	COIL 100UH	1	
L308		VLQEL05S2R7J	COIL 2.7UH	1	
L309,10		VLQEL05F101K	COIL 100UH	2	
L311		VLQEL05S220J	COIL 22UH	1	
L312		VLQEL05S3R3J	COIL 3.3UH	1	
L313		VLQEL05F101K	COIL 100UH	1	
L318		VLQEL05F101K	COIL 100UH	1	
L320		VLQEL05S2R2J	COIL 2.2UH	1	
L321		VLQEL05S2R7J	COIL 2.7UH	1	
L322		VLQEL05S220J	COIL 22UH	1	
L323		VLQEL05F101K	COIL 100UH	1	
L324		VLQEL05S1R0J	COIL 1UH	1	
L325-27		VLQEL05F101K	COIL 100UH	3	
L328		VLQEL05S470J	COIL 47UH	1	
L329		VLQEL05F101K	COIL 100UH	1	
L333		VLQEL05F101K	COIL 100UH	1	
L334		VLQEL05S6R8J	COIL 6.8UH	1	
L335		VLQEL05F101K	COIL 100UH	1	
L701		VLQEL05F101K	COIL 100UH	1	
L709		VLQEL05S4R7J	COIL 4.7UH	1	
L710		VLQEL05F101K	COIL 100UH	1	
L711		VLQEL05S560J	COIL 56UH	1	
L712		VLQEL05F101K	COIL 100UH	1	
L713		VLQEL05S3R9J	COIL 3.9UH	1	
L715		VLQEL05F101K	COIL 100UH	1	
L716		VLQEL05S181J	COIL 180UH	1	
L717		VLQEL05S680J	COIL 68UH	1	
L718		VLQEL05S3R3J	COIL 3.3UH	1	
L719,20		VLQEL05S8R2J	COIL 8.2UH	2	

Ref.No.		Part No.	Part Name & Description	Pcs	Remarks
L721		VLQEL05S4R7J	COIL 4.7UH	1	
L722		VLQEL05S3R3J	COIL 3.3UH	1	
L723		VLQEL05S330J	COIL 33UH	1	
L724		VLQEL05F101K	COIL 100UH	1	
L725		VLQEL05S1R5J	COIL 1.5UH	1	
L726-28		VLQEL05F101K	COIL 100UH	3	
L729		VLQEL05S150J	COIL 15UH	1	
L731		VLQEL05F101K	COIL 100UH	1	
L732		VLQEL05S6R8J	COIL 6.8UH	1	
L733		VLQEL05F101K	COIL 100UH	1	
Q1		2SD601	TRANSISTOR CHIP	1	(Q,R)
Q2		2SC3757	TRANSISTOR	1	(Q,R)
Q3,Q4		2SA1226	TRANSISTOR	2	
Q5		2SD601	TRANSISTOR CHIP	1	(Q,R)
Q6		2SA1022	TRANSISTOR CHIP	1	(B,C)
Q7		2SC2480	TRANSISTOR	1	
Q8		2SA1462	TRANSISTOR	1	
Q9		2SC2295	TRANSISTOR CHIP	1	(B,C)
Q10		2SA1022	TRANSISTOR CHIP	1	(B,C)
Q14		2SC2295	TRANSISTOR CHIP	1	(B,C)
Q15		2SK374	TRANSISTOR	1	
Q16		2SA1226	TRANSISTOR	1	
Q17		2SC3757	TRANSISTOR	1	(Q,R)
Q18		2SA1226	TRANSISTOR	1	
Q19,20		2SC2295	TRANSISTOR CHIP	2	(B,C)
Q21		UN2213	TRANSISTOR-RESISTOR	1	
Q201		2SD601	TRANSISTOR CHIP	1	(Q,R)
Q205,06		2SC2295	TRANSISTOR CHIP	2	(B,C)
Q207		2SC2480	TRANSISTOR	1	
Q208		2SA1462	TRANSISTOR	1	
Q209		2SC2295	TRANSISTOR CHIP	1	(B,C)
Q210		2SA1022	TRANSISTOR CHIP	1	(B,C)
Q211		2SC2295	TRANSISTOR CHIP	1	(B,C)
Q212		2SA1022	TRANSISTOR CHIP	1	(B,C)
Q213		2SA1226	TRANSISTOR	1	
Q214		2SC2295	TRANSISTOR CHIP	1	(B,C)
Q215		2SC3757	TRANSISTOR	1	(Q,R)
Q216		2SC2295	TRANSISTOR CHIP	1	(B,C)
Q217		2SC3757	TRANSISTOR	1	(Q,R)
Q218		2SA1226	TRANSISTOR	1	
Q219,20		2SC2295	TRANSISTOR CHIP	2	(B,C)
Q301-04		2SC2295	TRANSISTOR CHIP	4	(B,C)
Q313,14		2SC2295	TRANSISTOR CHIP	2	(B,C)
Q315		2SA1022	TRANSISTOR CHIP	1	(B,C)
Q316		2SC2295	TRANSISTOR CHIP	1	(B,C)
Q317,18		2SA1022	TRANSISTOR CHIP	2	(B,C)
Q319		IMX4	TRANSISTOR	1	
Q320		UN2113	TRANSISTOR-RESISTOR	1	
Q324		2SC2295	TRANSISTOR CHIP	1	(B,C)
Q326		2SC2295	TRANSISTOR CHIP	1	(B,C)
Q327		2SA1022	TRANSISTOR CHIP	1	(B,C)
Q329-38		2SC2295	TRANSISTOR CHIP	10	(B,C)
Q339,40		UN2213	TRANSISTOR-RESISTOR	2	
Q341		2SA1462	TRANSISTOR	1	
Q342,43		2SC3757	TRANSISTOR	2	(Q,R)
Q344		2SC2295	TRANSISTOR CHIP	1	(B,C)
Q345		2SA1022	TRANSISTOR CHIP	1	(B,C)
Q346		2SC2480	TRANSISTOR	1	
Q347		2SA1462	TRANSISTOR	1	
Q351		2SK374	TRANSISTOR	1	
Q352		2SC3757	TRANSISTOR	1	(Q,R)
Q353		2SA1226	TRANSISTOR	1	
Q356-61		UN2113	TRANSISTOR-RESISTOR	6	
Q376		2SA1462	TRANSISTOR	1	
Q377		2SA1226	TRANSISTOR	1	
Q378		2SB709	TRANSISTOR CHIP	1	(Q,R)
Q379		2SC2480	TRANSISTOR	1	
Q382-84		2SC3757	TRANSISTOR	3	(Q,R)
Q385		2SC2295	TRANSISTOR CHIP	1	(B,C)
Q386		2SD601	TRANSISTOR CHIP	1	(Q,R)
Q701,02		2SA1022	TRANSISTOR CHIP	2	(B,C)
Q710,11		2SC2295	TRANSISTOR CHIP	2	(B,C)

Refer to the P.C.BOARDS LIST, page 6-1-1, before using this page.

Ref.No.		Part No.	Part Name & Description	Pcs	Remarks
Q712		2SA1022	TRANSISTOR CHIP	1	(B,C)
Q713		2SC2295	TRANSISTOR CHIP	1	(B,C)
Q714,15		2SA1022	TRANSISTOR CHIP	2	(B,C)
Q716		2SC2295	TRANSISTOR CHIP	1	(B,C)
Q718		2SC2295	TRANSISTOR CHIP	1	(B,C)
Q719		2SA1022	TRANSISTOR CHIP	1	(B,C)
Q721-30		2SC2295	TRANSISTOR CHIP	10	(B,C)
Q731		UN2213	TRANSISTOR-RESISTOR	1	
Q732		2SA1462	TRANSISTOR	1	
Q733		2SC2295	TRANSISTOR CHIP	1	(B,C)
Q734		2SA1022	TRANSISTOR CHIP	1	(B,C)
Q735		2SC2480	TRANSISTOR	1	
Q736		2SA1462	TRANSISTOR	1	
Q740		2SK374	TRANSISTOR	1	
Q741		2SC3757	TRANSISTOR	1	(Q,R)
Q742		2SA1226	TRANSISTOR	1	
Q754		2SA1462	TRANSISTOR	1	
Q755		2SA1226	TRANSISTOR	1	
Q756		2SB709	TRANSISTOR CHIP	1	(Q,R)
Q757		2SC2480	TRANSISTOR	1	
Q758-60		2SC3757	TRANSISTOR	3	(Q,R)
Q761		2SD601	TRANSISTOR CHIP	1	(Q,R)
			RESISTORS		
R1		ERJ6GEYJ471	M.RESISTOR CH 1/10W 470	1	
R2		ERJ6GEYJ470	M.RESISTOR CH 1/10W 47	1	
R3		ERJ6GEYJ152	M.RESISTOR CH 1/10W 1.5K	1	
R4,R5		ERJ6GEYG331	M.RESISTOR CH 1/10W 330	2	
R6		ERJ6GEYJ101	M.RESISTOR CH 1/10W 100	1	
R7		ERJ6GEYJ151	M.RESISTOR CH 1/10W 150	1	
R8		ERJ6GEYJ332	M.RESISTOR CH 1/10W 3.3K	1	
R9		ERJ6GEYJ561	M.RESISTOR CH 1/10W 560	1	
R10		ERJ6GEYJ392	M.RESISTOR CH 1/10W 3.9K	1	
R11		ERJ6GEYJ101	M.RESISTOR CH 1/10W 100	1	
R12		ERJ6GEYJ332	M.RESISTOR CH 1/10W 3.3K	1	
R13		ERJ6GEYJ103	M.RESISTOR CH 1/10W 10K	1	
R14,15		ERJ6GEYJ101	M.RESISTOR CH 1/10W 100	2	
R16		ERJ6GEYJ222	M.RESISTOR CH 1/10W 2.2K	1	
R17		ERJ6GEYJ682	M.RESISTOR CH 1/10W 6.8K	1	
R18		ERJ6GEYJ152	M.RESISTOR CH 1/10W 1.5K	1	
R19		ERJ6GEYJ103	M.RESISTOR CH 1/10W 10K	1	
R20		ERJ6GEYJ472	M.RESISTOR CH 1/10W 4.7K	1	
R21		ERJ6GEYJ152	M.RESISTOR CH 1/10W 1.5K	1	
R22		VRE0034E152	M.RESISTOR CH 1/10W 1.5K	1	
R23		VRE0034E102	M.RESISTOR CH 1/10W 1K	1	
R24		ERJ6GEYJ470	M.RESISTOR CH 1/10W 47	1	
R26		ERJ6GEYJ222	M.RESISTOR CH 1/10W 2.2K	1	
R27		ERJ6GEYG243	M.RESISTOR CH1/10W 24K	1	
R28,29		ERJ6GEYJ221	M.RESISTOR CH 1/10W 220	2	
R30,31		ERJ6GEYJ183	M.RESISTOR CH 1/10W 18K	2	
R32,33		ERJ6GEYJ273	M.RESISTOR CH1/10W 27K	2	
R34		ERJ6GEYJ681	M.RESISTOR CH 1/10W 680	1	
R48		ERJ6GEYJ331	M.RESISTOR CH 1/10W 330	1	
R49		ERJ6GEYJ181	M.RESISTOR CH1/10W 180	1	
R50		ERJ6GEYJ101	M.RESISTOR CH 1/10W 100	1	
R51		ERJ6GEYJ332	M.RESISTOR CH 1/10W 3.3K	1	
R52		ERJ6GEYJ102	M.RESISTOR CH 1/10W 1K	1	
R53		ERJ6GEYJ221	M.RESISTOR CH 1/10W 220	1	
R54		ERJ6GEYK225	M.RESISTOR CH 1/10W 2.2M	1	
R55,56		ERJ6GEYJ101	M.RESISTOR CH 1/10W 100	2	
R57		ERJ6GEYJ222	M.RESISTOR CH 1/10W 2.2K	1	
R58		ERJ6GEYJ105	M.RESISTOR CH 1/10W 1M	1	
R59		ERJ6GEYK225	M.RESISTOR CH 1/10W 2.2M	1	
R60		ERJ6GEYJ472	M.RESISTOR CH 1/10W 4.7K	1	
R61		ERJ6GEYJ682	M.RESISTOR CH 1/10W 6.8K	1	
R62		ERJ6GEYJ103	M.RESISTOR CH 1/10W 10K	1	
R63		ERJ6GEYJ101	M.RESISTOR CH 1/10W 100	1	
R64		ERJ6GEYG243	M.RESISTOR CH1/10W 24K	1	
R65		ERJ6GEYJ103	M.RESISTOR CH 1/10W 10K	1	
R66		ERJ6GEYJ105	M.RESISTOR CH 1/10W 1M	1	
R67		VRE0034E27B	M.RESISTOR CH 1/10W 1.87K	1	
R68		ERJ6GEYK5R6	M.RESISTOR CH 1/10W 5.6	1	
R69		VRE0034E751	M.RESISTOR CH 1/10W 750	1	

Ref.No.		Part No.	Part Name & Description	Pcs	Remarks
R70		ERJ6GEYJ222	M.RESISTOR CH 1/10W 2.2K	1	
R71		ERJ6GEYJ332	M.RESISTOR CH 1/10W 3.3K	1	
R72		ERJ6GEYJ123	M.RESISTOR CH1/10W 12K	1	
R73,74		ERJ6GEYJ820	M.RESISTOR CH 1/10W 82	2	
R75,76		ERJ6GEYJ154	M.RESISTOR CH1/10W 150K	2	
R77		ERJ6GEYJ332	M.RESISTOR CH 1/10W 3.3K	1	
R78		ERJ6GEYJ470	M.RESISTOR CH 1/10W 47	1	
R79		ERJ6GEYJ331	M.RESISTOR CH 1/10W 330	1	
R80		ERJ6GEYJ151	M.RESISTOR CH 1/10W 150	1	
R81		ERJ6GEYJ102	M.RESISTOR CH 1/10W 1K	1	
R82,83		ERJ6GEYJ470	M.RESISTOR CH 1/10W 47	2	
R84,85		ERJ6GEYJ102	M.RESISTOR CH 1/10W 1K	2	
R86,87		ERJ6GEYJ101	M.RESISTOR CH 1/10W 100	2	
R88		ERJ6GEYJ222	M.RESISTOR CH 1/10W 2.2K	1	
R89		ERJ6GEYJ331	M.RESISTOR CH 1/10W 330	1	
R90		ERJ6GEYJ102	M.RESISTOR CH 1/10W 1K	1	
R92		ERJ6GEYJ101	M.RESISTOR CH 1/10W 100	1	
R93		ERJ6GEYJ470	M.RESISTOR CH 1/10W 47	1	
R94		ERJ6GEYJ473	M.RESISTOR CH 1/10W 47K	1	
R95		ERJ6GEYJ153	M.RESISTOR CH 1/10W 15K	1	
R96		ERJ6GEYJ223	M.RESISTOR CH 1/10W 22K	1	
R97		ERJ6GEYJ153	M.RESISTOR CH 1/10W 15K	1	
R98		ERJ6GEYJ103	M.RESISTOR CH 1/10W 10K	1	
R99		ERJ6GEYJ332	M.RESISTOR CH 1/10W 3.3K	1	
R100		ERJ6GEYJ101	M.RESISTOR CH 1/10W 100	1	
R102		ERJ6GEYG392	M.RESISTOR CH 1/10W 3.9K	1	
R103		VRE0034E27B	M.RESISTOR CH 1/10W 1.87K	1	
R104		ERJ6GEYJ333	M.RESISTOR CH 1/10W 33K	1	
R105		ERJ6GEYJ222	M.RESISTOR CH 1/10W 2.2K	1	
R201		ERJ6GEYJ471	M.RESISTOR CH 1/10W 470	1	
R202		ERJ6GEYJ101	M.RESISTOR CH 1/10W 100	1	
R203		ERJ6GEYJ152	M.RESISTOR CH 1/10W 1.5K	1	
R204,05		ERJ6GEYG331	M.RESISTOR CH 1/10W 330	2	
R206		ERJ6GEYJ101	M.RESISTOR CH 1/10W 100	1	
R207		ERJ6GEYJ151	M.RESISTOR CH 1/10W 150	1	
R208		ERJ6GEYJ681	M.RESISTOR CH 1/10W 680	1	
R209		ERJ6GEYJ392	M.RESISTOR CH 1/10W 3.9K	1	
R210		ERJ6GEYJ332	M.RESISTOR CH 1/10W 3.3K	1	
R211		ERJ6GEYJ101	M.RESISTOR CH 1/10W 100	1	
R226		VRE0034E152	M.RESISTOR CH 1/10W 1.5K	1	
R227		VRE0034E102	M.RESISTOR CH 1/10W 1K	1	
R228		ERJ6GEYJ470	M.RESISTOR CH 1/10W 47	1	
R229		ERJ6GEYJ222	M.RESISTOR CH 1/10W 2.2K	1	
R230		ERJ6GEYJ331	M.RESISTOR CH 1/10W 330	1	
R231		ERJ6GEYJ332	M.RESISTOR CH 1/10W 3.3K	1	
R232		ERJ6GEYJ101	M.RESISTOR CH 1/10W 100	1	
R233		ERJ6GEYJ332	M.RESISTOR CH 1/10W 3.3K	1	
R234		ERJ6GEYG243	M.RESISTOR CH1/10W 24K	1	
R235,36		ERJ6GEYJ221	M.RESISTOR CH 1/10W 220	2	
R237,38		ERJ6GEYJ183	M.RESISTOR CH 1/10W 18K	2	
R239,40		ERJ6GEYJ273	M.RESISTOR CH1/10W 27K	2	
R241		ERJ6GEYJ681	M.RESISTOR CH 1/10W 680	1	
R242		ERJ6GEYJ181	M.RESISTOR CH1/10W 180	1	
R243		ERJ6GEYJ332	M.RESISTOR CH 1/10W 3.3K	1	
R244		ERJ6GEYK475	M.RESISTOR CH 1/10W 4.7M	1	
R245		ERJ6GEYJ181	M.RESISTOR CH1/10W 180	1	
R246		ERJ6GEYJ472	M.RESISTOR CH 1/10W 4.7K	1	
R247		ERJ6GEYJ563	M.RESISTOR CH 1/10W 56K	1	
R248		ERJ6GEYJ153	M.RESISTOR CH 1/10W 15K	1	
R249		VRE0034E751	M.RESISTOR CH 1/10W 750	1	
R250		VRE0034E27B	M.RESISTOR CH 1/10W 1.87K	1	
R251		ERJ6GEYK5R6	M.RESISTOR CH 1/10W 5.6	1	
R252		ERJ6GEYJ222	M.RESISTOR CH 1/10W 2.2K	1	
R253		ERJ6GEYJ332	M.RESISTOR CH 1/10W 3.3K	1	
R254		ERJ6GEYJ123	M.RESISTOR CH1/10W 12K	1	
R255,56		ERJ6GEYJ680	M.RESISTOR CH 1/10W 68	2	
R257,58		ERJ6GEYJ154	M.RESISTOR CH1/10W 150K	2	
R259		ERJ6GEYJ332	M.RESISTOR CH 1/10W 3.3K	1	
R260		ERJ6GEYJ750	M.RESISTOR CH 1/10W 75	1	
R261		ERJ6GEYJ470	M.RESISTOR CH 1/10W 47	1	
R262		ERJ6GEYJ471	M.RESISTOR CH 1/10W 470	1	
R263		ERJ6GEYJ391	M.RESISTOR CH 1/10W 390	1	
R264		ERJ6GEYG240	M.RESISTOR CH1/10W 24	1	
R265		ERJ6GEYJ471	M.RESISTOR CH 1/10W 470	1	
R266		ERJ6GEYJ470	M.RESISTOR CH 1/10W 47	1	

Refer to the P.C.BOARDS LIST, page 6-1-1, before using this page.

Ref.No.		Part No.	Part Name & Description	Pcs	Remarks
R267		ERJ6GEYJ562	M.RESISTOR CH 1/10W 5.6K	1	
R268		ERJ6GEYJ472	M.RESISTOR CH 1/10W 4.7K	1	
R269,70		ERJ6GEYJ102	M.RESISTOR CH 1/10W 1K	2	
R271		ERJ6GEYJ222	M.RESISTOR CH 1/10W 2.2K	1	
R272		ERJ6GEYJ221	M.RESISTOR CH 1/10W 220	1	
R273		ERJ6GEYJ472	M.RESISTOR CH 1/10W 4.7K	1	
R274		ERJ6GEYJ470	M.RESISTOR CH 1/10W 47	1	
R275		ERJ6GEYJ682	M.RESISTOR CH 1/10W 6.8K	1	
R276		ERJ6GEYJ332	M.RESISTOR CH 1/10W 3.3K	1	
R277		ERJ6GEYJ222	M.RESISTOR CH 1/10W 2.2K	1	
R279,80		ERJ6GEYJ470	M.RESISTOR CH 1/10W 47	2	
R281		ERJ6GEYJ222	M.RESISTOR CH 1/10W 2.2K	1	
R282,83		ERJ6GEYJ101	M.RESISTOR CH 1/10W 100	2	
R284		ERJ6GEYJ472	M.RESISTOR CH 1/10W 4.7K	1	
R285		ERJ6GEYJ222	M.RESISTOR CH 1/10W 2.2K	1	
R286		ERJ6GEYJ331	M.RESISTOR CH 1/10W 330	1	
R287		ERJ6GEYJ102	M.RESISTOR CH 1/10W 1K	1	
R288		ERJ6GEYJ470	M.RESISTOR CH 1/10W 47	1	
R289		ERJ6GEYJ101	M.RESISTOR CH 1/10W 100	1	
R290		ERJ6GEYJ153	M.RESISTOR CH 1/10W 15K	1	
R291		ERJ6GEYJ222	M.RESISTOR CH 1/10W 2.2K	1	
R292		ERJ6GEY0R00	M.RESISTOR CH 1/10W 0	1	
R293		ERJ6GEYJ222	M.RESISTOR CH 1/10W 2.2K	1	
R301		ERJ6GEYJ470	M.RESISTOR CH 1/10W 47	1	
R302		ERJ6GEYJ681	M.RESISTOR CH 1/10W 680	1	
R303		ERJ6GEYJ102	M.RESISTOR CH 1/10W 1K	1	
R304		ERJ6GEYJ332	M.RESISTOR CH 1/10W 3.3K	1	
R305		ERJ6GEYJ470	M.RESISTOR CH 1/10W 47	1	
R306		ERJ6GEYJ681	M.RESISTOR CH 1/10W 680	1	
R307		ERJ6GEYJ102	M.RESISTOR CH 1/10W 1K	1	
R308		ERJ6GEYJ332	M.RESISTOR CH 1/10W 3.3K	1	
R309		ERJ6GEYJ222	M.RESISTOR CH 1/10W 2.2K	1	
R310		ERJ6GEYJ470	M.RESISTOR CH 1/10W 47	1	
R332		ERJ6GEYJ152	M.RESISTOR CH 1/10W 1.5K	1	
R333,34		ERJ6GEYG471	M.RESISTOR CH 1/10W 470	2	
R335,36		ERJ6GEYJ470	M.RESISTOR CH 1/10W 47	2	
R337,38		ERJ6GEYJ222	M.RESISTOR CH 1/10W 2.2K	2	
R339,40		ERJ6GEYJ271	M.RESISTOR CH 1/10W 270	2	
R341		ERJ6GEYJ470	M.RESISTOR CH 1/10W 47	1	
R342		ERJ6GEYJ271	M.RESISTOR CH 1/10W 270	1	
R343		ERJ6GEYJ821	M.RESISTOR CH 1/10W 820	1	
R344		ERJ6GEYJ470	M.RESISTOR CH 1/10W 47	1	
R345		ERJ6GEYJ222	M.RESISTOR CH 1/10W 2.2K	1	
R346		ERJ6GEYJ102	M.RESISTOR CH 1/10W 1K	1	
R347		ERJ6GEYG331	M.RESISTOR CH 1/10W 330	1	
R348		ERJ6GEYJ153	M.RESISTOR CH 1/10W 15K	1	
R349		ERJ6GEYJ333	M.RESISTOR CH 1/10W 33K	1	
R350,51		ERJ6GEYJ220	M.RESISTOR CH1/10W 22	2	
R352		ERJ6GEYJ470	M.RESISTOR CH 1/10W 47	1	
R353		ERJ6GEYJ152	M.RESISTOR CH 1/10W 1.5K	1	
R354		ERJ6GEYJ221	M.RESISTOR CH 1/10W 220	1	
R355		ERJ6GEYJ102	M.RESISTOR CH 1/10W 1K	1	
R356		ERJ6GEYJ221	M.RESISTOR CH 1/10W 220	1	
R357		ERJ6GEYJ222	M.RESISTOR CH 1/10W 2.2K	1	
R358		ERJ6GEYJ101	M.RESISTOR CH 1/10W 100	1	
R359		ERJ6GEYJ472	M.RESISTOR CH 1/10W 4.7K	1	
R360,61		ERJ6GEYJ473	M.RESISTOR CH 1/10W 47K	2	
R362		ERJ6GEYJ472	M.RESISTOR CH 1/10W 4.7K	1	
R363		ERJ6GEYJ223	M.RESISTOR CH 1/10W 22K	1	
R364		ERJ6GEYJ273	M.RESISTOR CH1/10W 27K	1	
R365		ERJ6GEYJ473	M.RESISTOR CH 1/10W 47K	1	
R366		ERJ6GEYJ223	M.RESISTOR CH 1/10W 22K	1	
R367		ERJ6GEYJ104	M.RESISTOR CH 1/10W 100K	1	
R368		ERJ6GEYJ472	M.RESISTOR CH 1/10W 4.7K	1	
R369		ERJ6GEYJ103	M.RESISTOR CH 1/10W 10K	1	
R370		ERJ6GEYJ223	M.RESISTOR CH 1/10W 22K	1	
R371		ERJ6GEYJ682	M.RESISTOR CH 1/10W 6.8K	1	
R394		ERJ6GEYJ471	M.RESISTOR CH 1/10W 470	1	
R395		ERJ6GEYJ101	M.RESISTOR CH 1/10W 100	1	
R396		ERJ6GEYJ222	M.RESISTOR CH 1/10W 2.2K	1	
R397		ERJ6GEYJ470	M.RESISTOR CH 1/10W 47	1	
R398		ERJ6GEYJ152	M.RESISTOR CH 1/10W 1.5K	1	
R399,00		ERJ6GEYG301	M.RESISTOR CH 1/10W 300	2	
R401		ERJ6GEYJ470	M.RESISTOR CH 1/10W 47	1	
R402		ERJ6GEYJ102	M.RESISTOR CH 1/10W 1K	1	

Ref.No.		Part No.	Part Name & Description	Pcs	Remarks
R403		ERJ6GEYJ681	M.RESISTOR CH 1/10W 680	1	
R404		ERJ6GEYJ102	M.RESISTOR CH 1/10W 1K	1	
R405		ERJ6GEYJ152	M.RESISTOR CH 1/10W 1.5K	1	
R406		ERJ6GEYJ470	M.RESISTOR CH 1/10W 47	1	
R407		ERJ6GEYJ221	M.RESISTOR CH 1/10W 220	1	
R408		ERJ6GEYJ222	M.RESISTOR CH 1/10W 2.2K	1	
R409		ERJ6GEYJ470	M.RESISTOR CH 1/10W 47	1	
R410		ERJ6GEYJ152	M.RESISTOR CH 1/10W 1.5K	1	
R411,12		ERJ6GEYJ331	M.RESISTOR CH 1/10W 330	2	
R413		ERJ6GEYJ470	M.RESISTOR CH 1/10W 47	1	
R414		ERJ6GEYJ222	M.RESISTOR CH 1/10W 2.2K	1	
R415		ERJ6GEYJ470	M.RESISTOR CH 1/10W 47	1	
R426		ERJ6GEYJ470	M.RESISTOR CH 1/10W 47	1	
R427-34		ERJ6GEYJ102	M.RESISTOR CH 1/10W 1K	8	
R435,36		ERJ6GEYJ332	M.RESISTOR CH 1/10W 3.3K	2	
R437		ERJ6GEYJ101	M.RESISTOR CH 1/10W 100	1	
R438,39		ERJ6GEYJ471	M.RESISTOR CH 1/10W 470	2	
R440		ERJ6GEYJ470	M.RESISTOR CH 1/10W 47	1	
R441,42		ERJ6GEYJ681	M.RESISTOR CH 1/10W 680	2	
R443,44		ERJ6GEYJ101	M.RESISTOR CH 1/10W 100	2	
R445		ERJ6GEYJ470	M.RESISTOR CH 1/10W 47	1	
R446		ERJ6GEYJ151	M.RESISTOR CH 1/10W 150	1	
R447,48		ERJ6GEYJ222	M.RESISTOR CH 1/10W 2.2K	2	
R449		ERJ6GEYJ470	M.RESISTOR CH 1/10W 47	1	
R450,51		ERJ6GEYJ222	M.RESISTOR CH 1/10W 2.2K	2	
R452,53		ERJ6GEYJ470	M.RESISTOR CH 1/10W 47	2	
R454-65		ERJ6GEYJ102	M.RESISTOR CH 1/10W 1K	12	
R466		ERJ6GEYJ683	M.RESISTOR CH 1/10W 68K	1	
R467,68		ERJ6GEYJ103	M.RESISTOR CH 1/10W 10K	2	
R469,70		ERJ6GEYJ150	M.RESISTOR CH 1/10W 15	2	
R471,72		ERJ6GEYJ332	M.RESISTOR CH 1/10W 3.3K	2	
R473		ERJ6GEYJ101	M.RESISTOR CH 1/10W 100	1	
R474		ERDS2TJ222	C.RESISTOR 1/4W 2.2K	1	
R475		ERJ6GEYJ102	M.RESISTOR CH 1/10W 1K	1	
R476		ERJ6GEYJ471	M.RESISTOR CH 1/10W 470	1	
R478		ERJ6GEYJ102	M.RESISTOR CH 1/10W 1K	1	
R479		ERJ6GEYJ222	M.RESISTOR CH 1/10W 2.2K	1	
R480,81		ERJ6GEYJ471	M.RESISTOR CH 1/10W 470	2	
R482		ERJ6GEYJ470	M.RESISTOR CH 1/10W 47	1	
R483,84		ERJ6GEYJ333	M.RESISTOR CH 1/10W 33K	2	
R485,86		ERJ6GEYJ102	M.RESISTOR CH 1/10W 1K	2	
R487		ERJ6GEYJ222	M.RESISTOR CH 1/10W 2.2K	1	
R488		ERJ6GEYJ221	M.RESISTOR CH 1/10W 220	1	
R489		ERJ6GEYJ392	M.RESISTOR CH 1/10W 3.9K	1	
R490		ERJ6GEYJ470	M.RESISTOR CH 1/10W 47	1	
R491		ERJ6GEYJ333	M.RESISTOR CH 1/10W 33K	1	
R492		ERJ6GEYJ471	M.RESISTOR CH 1/10W 470	1	
R493		ERJ6GEYJ152	M.RESISTOR CH 1/10W 1.5K	1	
R494,95		ERJ6GEYJ101	M.RESISTOR CH 1/10W 100	2	
R496		ERJ6GEYJ222	M.RESISTOR CH 1/10W 2.2K	1	
R497		ERJ6GEYJ102	M.RESISTOR CH 1/10W 1K	1	
R498		ERJ6GEYJ101	M.RESISTOR CH 1/10W 100	1	
R499		ERJ6GEYJ332	M.RESISTOR CH 1/10W 3.3K	1	
R500		ERJ6GEYJ223	M.RESISTOR CH 1/10W 22K	1	
R501		ERJ6GEYJ332	M.RESISTOR CH 1/10W 3.3K	1	
R502		ERJ6GEYJ472	M.RESISTOR CH 1/10W 4.7K	1	
R503		ERJ6GEYJ103	M.RESISTOR CH 1/10W 10K	1	
R504		ERJ6GEYJ683	M.RESISTOR CH 1/10W 68K	1	
R505,06		ERJ6GEYJ473	M.RESISTOR CH 1/10W 47K	2	
R507		ERJ6GEYJ471	M.RESISTOR CH 1/10W 470	1	
R509		ERJ6GEYJ221	M.RESISTOR CH 1/10W 220	1	
R510		ERJ6GEYJ392	M.RESISTOR CH 1/10W 3.9K	1	
R511		VRE0034E27B	M.RESISTOR CH 1/10W 1.87K	1	
R512		VRE0034E751	M.RESISTOR CH 1/10W 750	1	
R513		ERJ6GEYJ332	M.RESISTOR CH 1/10W 3.3K	1	
R514		ERJ6GEYJ152	M.RESISTOR CH 1/10W 1.5K	1	
R515		ERJ6GEYJ682	M.RESISTOR CH 1/10W 6.8K	1	
R516		ERJ6GEYG301	M.RESISTOR CH 1/10W 300	1	
R517		ERJ6GEY0R00	M.RESISTOR CH 1/10W 0	1	
R518		ERJ6GEYG471	M.RESISTOR CH 1/10W 470	1	
R519		ERJ6GEYJ332	M.RESISTOR CH 1/10W 3.3K	1	
R520		ERJ6GEYJ101	M.RESISTOR CH 1/10W 100	1	
R521		ERJ6GEYJ151	M.RESISTOR CH 1/10W 150	1	
R522		VRE0034E26A	M.RESISTOR CH 1/10W 182	1	
R523		ERJ6GEYJ102	M.RESISTOR CH 1/10W 1K	1	

Refer to the P.C.BOARDS LIST, page 6-1-1, before using this page.

Ref.No.		Part No.	Part Name & Description	Pcs	Remarks
R524		VRE0034E89A	M.RESISTOR CH 1/10W 825	1	
R525		VRE0034E21B	M.RESISTOR CH 1/10W 1.62K	1	
R526,27		ERJ6GEYJ470	M.RESISTOR CH 1/10W 47	2	
R528		ERJ6GEYJ101	M.RESISTOR CH 1/10W 100	1	
R529		ERJ6GEYJ102	M.RESISTOR CH 1/10W 1K	1	
R530		ERJ6GEYJ681	M.RESISTOR CH 1/10W 680	1	
R531,32		ERJ6GEYJ273	M.RESISTOR CH1/10W 27K	2	
R533,34		ERJ6GEYJ183	M.RESISTOR CH 1/10W 18K	2	
R535,36		ERJ6GEYJ221	M.RESISTOR CH 1/10W 220	2	
R537		ERJ6GEYG243	M.RESISTOR CH1/10W 24K	1	
R549		ERJ6GEYJ470	M.RESISTOR CH 1/10W 47	1	
R550		ERJ6GEYJ472	M.RESISTOR CH 1/10W 4.7K	1	
R551		ERJ6GEYJ473	M.RESISTOR CH 1/10W 47K	1	
R552		ERJ6GEYJ332	M.RESISTOR CH 1/10W 3.3K	1	
R553		ERJ6GEYJ471	M.RESISTOR CH 1/10W 470	1	
R554		ERJ6GEYJ102	M.RESISTOR CH 1/10W 1K	1	
R555		ERJ6GEYJ472	M.RESISTOR CH 1/10W 4.7K	1	
R556		ERJ6GEYJ122	M.RESISTOR CH1/10W 1.2K	1	
R561-63		ERJ6GEYJ473	M.RESISTOR CH 1/10W 47K	3	
R564		ERJ6GEYJ222	M.RESISTOR CH 1/10W 2.2K	1	
R565		ERJ6GEYJ223	M.RESISTOR CH 1/10W 22K	1	
R566		ERJ6GEYJ222	M.RESISTOR CH 1/10W 2.2K	1	
R567		ERJ6GEYJ223	M.RESISTOR CH 1/10W 22K	1	
R620		ERJ6GEYJ101	M.RESISTOR CH 1/10W 100	1	
R624-26		ERJ6GEYJ103	M.RESISTOR CH 1/10W 10K	3	
R627		ERJ6GEYJ472	M.RESISTOR CH 1/10W 4.7K	1	
R628		ERJ6GEYJ223	M.RESISTOR CH 1/10W 22K	1	
R629		ERJ6GEYJ472	M.RESISTOR CH 1/10W 4.7K	1	
R630,31		ERJ6GEYJ101	M.RESISTOR CH 1/10W 100	2	
R633		ERDS2TJ331	C.RESISTOR 1/4W 330	1	
R636		ERJ6GEYJ470	M.RESISTOR CH 1/10W 47	1	
R637		ERJ6GEYJ102	M.RESISTOR CH 1/10W 1K	1	
R639,40		ERJ6GEYJ331	M.RESISTOR CH 1/10W 330	2	
R643		ERJ6GEYJ331	M.RESISTOR CH 1/10W 330	1	
R644		ERJ6GEYJ470	M.RESISTOR CH 1/10W 47	1	
R648		ERJ6GEYJ102	M.RESISTOR CH 1/10W 1K	1	
R649		ERJ6GEYJ471	M.RESISTOR CH 1/10W 470	1	
R650,51		ERJ6GEYJ470	M.RESISTOR CH 1/10W 47	2	
R656		ERJ6GEYJ470	M.RESISTOR CH 1/10W 47	1	
R658,59		ERJ6GEYJ470	M.RESISTOR CH 1/10W 47	2	
R701		ERJ6GEYJ470	M.RESISTOR CH 1/10W 47	1	
R702		ERJ6GEYJ102	M.RESISTOR CH 1/10W 1K	1	
R703		ERJ6GEYJ821	M.RESISTOR CH 1/10W 820	1	
R704		ERJ6GEY0R00	M.RESISTOR CH 1/10W 0	1	
R705		ERJ6GEYJ332	M.RESISTOR CH 1/10W 3.3K	1	
R712		ERJ6GEYJ470	M.RESISTOR CH 1/10W 47	1	
R723,24		ERJ6GEYJ101	M.RESISTOR CH 1/10W 100	2	
R725		ERJ6GEYJ102	M.RESISTOR CH 1/10W 1K	1	
R726		ERJ6GEYJ470	M.RESISTOR CH 1/10W 47	1	
R727		ERJ6GEYG471	M.RESISTOR CH 1/10W 470	1	
R728,29		ERJ6GEYJ470	M.RESISTOR CH 1/10W 47	2	
R730		ERJ6GEYG471	M.RESISTOR CH 1/10W 470	1	
R731		ERJ6GEYJ222	M.RESISTOR CH 1/10W 2.2K	1	
R732,33		ERJ6GEYG391	M.RESISTOR CH 1/10W 390	2	
R734		ERJ6GEYJ222	M.RESISTOR CH 1/10W 2.2K	1	
R735		ERJ6GEYJ470	M.RESISTOR CH 1/10W 47	1	
R736		ERJ6GEYJ271	M.RESISTOR CH 1/10W 270	1	
R737		ERJ6GEYJ102	M.RESISTOR CH 1/10W 1K	1	
R738		ERJ6GEYJ821	M.RESISTOR CH 1/10W 820	1	
R739		ERJ6GEYJ470	M.RESISTOR CH 1/10W 47	1	
R740		ERJ6GEYJ222	M.RESISTOR CH 1/10W 2.2K	1	
R741		ERJ6GEYJ102	M.RESISTOR CH 1/10W 1K	1	
R742		ERJ6GEYG331	M.RESISTOR CH 1/10W 330	1	
R743		ERJ6GEYJ153	M.RESISTOR CH 1/10W 15K	1	
R744		ERJ6GEYJ473	M.RESISTOR CH 1/10W 47K	1	
R745,46		ERJ6GEYJ220	M.RESISTOR CH1/10W 22	2	
R747		ERJ6GEYJ470	M.RESISTOR CH 1/10W 47	1	
R748		ERJ6GEYJ152	M.RESISTOR CH 1/10W 1.5K	1	
R749		ERJ6GEYJ221	M.RESISTOR CH 1/10W 220	1	
R750		ERJ6GEYJ102	M.RESISTOR CH 1/10W 1K	1	
R751		ERJ6GEYJ221	M.RESISTOR CH 1/10W 220	1	
R752		ERJ6GEYJ222	M.RESISTOR CH 1/10W 2.2K	1	
R753		ERJ6GEYJ472	M.RESISTOR CH 1/10W 4.7K	1	
R754		ERJ6GEYJ103	M.RESISTOR CH 1/10W 10K	1	
R755		ERJ6GEYJ472	M.RESISTOR CH 1/10W 4.7K	1	
R756		ERJ6GEYJ682	M.RESISTOR CH 1/10W 6.8K	1	
R757		ERJ6GEYJ471	M.RESISTOR CH 1/10W 470	1	
R758		ERJ6GEYJ101	M.RESISTOR CH 1/10W 100	1	
R759		ERJ6GEYJ222	M.RESISTOR CH 1/10W 2.2K	1	
R760		ERJ6GEYJ470	M.RESISTOR CH 1/10W 47	1	
R761		ERJ6GEYJ152	M.RESISTOR CH 1/10W 1.5K	1	
R762,63		ERJ6GEYG301	M.RESISTOR CH 1/10W 300	2	
R764		ERJ6GEYJ470	M.RESISTOR CH 1/10W 47	1	
R765		ERJ6GEYJ102	M.RESISTOR CH 1/10W 1K	1	
R766		ERJ6GEYJ681	M.RESISTOR CH 1/10W 680	1	
R767		ERJ6GEYJ102	M.RESISTOR CH 1/10W 1K	1	
R768		ERJ6GEYJ152	M.RESISTOR CH 1/10W 1.5K	1	
R769		ERJ6GEYJ470	M.RESISTOR CH 1/10W 47	1	
R770		ERJ6GEYJ221	M.RESISTOR CH 1/10W 220	1	
R771		ERJ6GEYJ222	M.RESISTOR CH 1/10W 2.2K	1	
R772		ERJ6GEYJ470	M.RESISTOR CH 1/10W 47	1	
R773		ERJ6GEYJ152	M.RESISTOR CH 1/10W 1.5K	1	
R774,75		ERJ6GEYJ331	M.RESISTOR CH 1/10W 330	2	
R776		ERJ6GEYJ470	M.RESISTOR CH 1/10W 47	1	
R777		ERJ6GEYJ222	M.RESISTOR CH 1/10W 2.2K	1	
R778		ERJ6GEYJ470	M.RESISTOR CH 1/10W 47	1	
R789		ERJ6GEYJ470	M.RESISTOR CH 1/10W 47	1	
R790-97		ERJ6GEYJ102	M.RESISTOR CH 1/10W 1K	8	
R798,99		ERJ6GEYJ332	M.RESISTOR CH 1/10W 3.3K	2	
R800		ERJ6GEYJ101	M.RESISTOR CH 1/10W 100	1	
R801,02		ERJ6GEYJ471	M.RESISTOR CH 1/10W 470	2	
R803		ERJ6GEYJ470	M.RESISTOR CH 1/10W 47	1	
R804,05		ERJ6GEYJ681	M.RESISTOR CH 1/10W 680	2	
R806,07		ERJ6GEYJ101	M.RESISTOR CH 1/10W 100	2	
R808		ERJ6GEYJ470	M.RESISTOR CH 1/10W 47	1	
R809		ERJ6GEYJ151	M.RESISTOR CH 1/10W 150	1	
R810,11		ERJ6GEYJ222	M.RESISTOR CH 1/10W 2.2K	2	
R812		ERJ6GEYJ470	M.RESISTOR CH 1/10W 47	1	
R813,14		ERJ6GEYJ222	M.RESISTOR CH 1/10W 2.2K	2	
R815,16		ERJ6GEYJ470	M.RESISTOR CH 1/10W 47	2	
R817-28		ERJ6GEYJ102	M.RESISTOR CH 1/10W 1K	12	
R829		ERJ6GEYJ683	M.RESISTOR CH 1/10W 68K	1	
R830,31		ERJ6GEYJ103	M.RESISTOR CH 1/10W 10K	2	
R832,33		ERJ6GEYJ150	M.RESISTOR CH 1/10W 15	2	
R834,35		ERJ6GEYJ332	M.RESISTOR CH 1/10W 3.3K	2	
R836		ERJ6GEYJ101	M.RESISTOR CH 1/10W 100	1	
R837		ERDS2TJ222	C.RESISTOR 1/4W 2.2K	1	
R838-40		ERJ6GEYJ102	M.RESISTOR CH 1/10W 1K	3	
R841		ERJ6GEYJ471	M.RESISTOR CH 1/10W 470	1	
R842		ERJ6GEYJ222	M.RESISTOR CH 1/10W 2.2K	1	
R843,44		ERJ6GEYJ471	M.RESISTOR CH 1/10W 470	2	
R845		ERJ6GEYJ470	M.RESISTOR CH 1/10W 47	1	
R846,47		ERJ6GEYJ333	M.RESISTOR CH 1/10W 33K	2	
R848,49		ERJ6GEYJ102	M.RESISTOR CH 1/10W 1K	2	
R850		ERJ6GEYJ222	M.RESISTOR CH 1/10W 2.2K	1	
R851		ERJ6GEYJ221	M.RESISTOR CH 1/10W 220	1	
R852		ERJ6GEYJ392	M.RESISTOR CH 1/10W 3.9K	1	
R853		ERJ6GEYJ470	M.RESISTOR CH 1/10W 47	1	
R854		ERJ6GEYJ471	M.RESISTOR CH 1/10W 470	1	
R855		ERJ6GEYJ152	M.RESISTOR CH 1/10W 1.5K	1	
R856,57		ERJ6GEYJ101	M.RESISTOR CH 1/10W 100	2	
R858		ERJ6GEYJ222	M.RESISTOR CH 1/10W 2.2K	1	
R859		ERJ6GEYJ102	M.RESISTOR CH 1/10W 1K	1	
R860		ERJ6GEYJ101	M.RESISTOR CH 1/10W 100	1	
R861		ERJ6GEYJ332	M.RESISTOR CH 1/10W 3.3K	1	
R862		ERJ6GEYJ223	M.RESISTOR CH 1/10W 22K	1	
R863		ERJ6GEYJ332	M.RESISTOR CH 1/10W 3.3K	1	
R864		ERJ6GEYJ472	M.RESISTOR CH 1/10W 4.7K	1	
R865		ERJ6GEYJ103	M.RESISTOR CH 1/10W 10K	1	
R866		ERJ6GEYJ683	M.RESISTOR CH 1/10W 68K	1	
R867		ERJ6GEYJ473	M.RESISTOR CH 1/10W 47K	1	
R869		ERJ6GEYJ471	M.RESISTOR CH 1/10W 470	1	
R871		ERJ6GEYJ221	M.RESISTOR CH 1/10W 220	1	
R872		ERJ6GEYJ392	M.RESISTOR CH 1/10W 3.9K	1	
R873		VRE0034E27B	M.RESISTOR CH 1/10W 1.87K	1	
R874		VRE0034E751	M.RESISTOR CH 1/10W 750	1	
R875		ERJ6GEYJ332	M.RESISTOR CH 1/10W 3.3K	1	
R876		ERJ6GEYJ152	M.RESISTOR CH 1/10W 1.5K	1	
R877		ERJ6GEYJ102	M.RESISTOR CH 1/10W 1K	1	
R878		ERJ6GEYG301	M.RESISTOR CH 1/10W 300	1	

Refer to the P.C.BOARDS LIST, page 6-1-1, before using this page.

Ref.No.		Part No.	Part Name & Description	Pcs	Remarks
R879		ERJ6GEYG471	M.RESISTOR CH 1/10W 470	1	
R880		ERJ6GEYJ332	M.RESISTOR CH 1/10W 3.3K	1	
R881		ERJ6GEYJ101	M.RESISTOR CH 1/10W 100	1	
R882		ERJ6GEYJ151	M.RESISTOR CH 1/10W 150	1	
R883		VRE0034E26A	M.RESISTOR CH 1/10W 182	1	
R884		ERJ6GEYJ331	M.RESISTOR CH 1/10W 330	1	
R885		VRE0034E89A	M.RESISTOR CH 1/10W 825	1	
R886,87		ERJ6GEYJ470	M.RESISTOR CH 1/10W 47	2	
R888		VRE0034E21B	M.RESISTOR CH 1/10W 1.62K	1	
R889		ERJ6GEYJ681	M.RESISTOR CH 1/10W 680	1	
R890		ERJ6GEYJ273	M.RESISTOR CH1/10W 27K	1	
R891		ERJ6GEYJ183	M.RESISTOR CH 1/10W 18K	1	
R892		ERJ6GEYJ221	M.RESISTOR CH 1/10W 220	1	
R893		ERJ6GEYJ273	M.RESISTOR CH1/10W 27K	1	
R894		ERJ6GEYJ183	M.RESISTOR CH 1/10W 18K	1	
R895		ERJ6GEYJ221	M.RESISTOR CH 1/10W 220	1	
R896		ERJ6GEYG243	M.RESISTOR CH1/10W 24K	1	
R908		ERJ6GEYJ470	M.RESISTOR CH 1/10W 47	1	
R909		ERJ6GEYJ472	M.RESISTOR CH 1/10W 4.7K	1	
R910		ERJ6GEYJ473	M.RESISTOR CH 1/10W 47K	1	
R911		ERJ6GEYJ332	M.RESISTOR CH 1/10W 3.3K	1	
R912		ERJ6GEYJ471	M.RESISTOR CH 1/10W 470	1	
R913		ERJ6GEYJ102	M.RESISTOR CH 1/10W 1K	1	
R914		ERJ6GEYJ472	M.RESISTOR CH 1/10W 4.7K	1	
R915		ERJ6GEYJ122	M.RESISTOR CH1/10W 1.2K	1	
R964		ERJ6GEYJ101	M.RESISTOR CH 1/10W 100	1	
R965		ERJ6GEYJ102	M.RESISTOR CH 1/10W 1K	1	
R966-68		ERJ6GEYJ103	M.RESISTOR CH 1/10W 10K	3	
R969,70		ERJ6GEYJ472	M.RESISTOR CH 1/10W 4.7K	2	
R971		ERJ6GEYJ223	M.RESISTOR CH 1/10W 22K	1	
R972		ERDS2TJ331	C.RESISTOR 1/4W 330	1	
R975		ERJ6GEYJ470	M.RESISTOR CH 1/10W 47	1	
R979		ERJ6GEYJ102	M.RESISTOR CH 1/10W 1K	1	
R980		ERJ6GEYJ471	M.RESISTOR CH 1/10W 470	1	
R985		ERJ6GEYJ470	M.RESISTOR CH 1/10W 47	1	
R986		ERJ6GEYJ331	M.RESISTOR CH 1/10W 330	1	
R989		ERJ6GEYJ472	M.RESISTOR CH 1/10W 4.7K	1	
R990		ERJ6GEYJ470	M.RESISTOR CH 1/10W 47	1	
SW1		VSS0126	SWITCH	1	
SW201,02		VSS0126	SWITCH	2	
SW304		VSS0126	SWITCH	1	
SW704		VSS0126	SWITCH	1	
TP1		VJR0582	PACK PIN	1	
TP3		VJR0582	PACK PIN	1	
TP5-P8		VJR0582	PACK PIN	4	
TP201		VJR0582	PACK PIN	1	
TP203-07		VJR0582	PACK PIN	5	
TP301,02		VJR0582	PACK PIN	2	
TP304		VJR0582	PACK PIN	1	
TP307-11		VJR0582	PACK PIN	5	
TP315-17		VJR0582	PACK PIN	3	
TP701-08		VJR0582	PACK PIN	8	
TP711		VJR0582	PACK PIN	1	
TPG1,G2		VJR0582	PACK PIN	2	
TPG201,02		VJR0582	PACK PIN	2	
TPG301-03		VJR0582	PACK PIN	3	
TPG701-03		VJR0582	PACK PIN	3	
VC301		ECV1ZW10X53T	V.CAPACITOR 10P	1	
VC302		ECV1ZW20X53T	V.CAPACITOR 20P	1	
VC701		ECV1ZW20X53T	V.CAPACITOR 20P	1	
VL201		EIR7QF015B	COIL	1	
VL301		EIR7QF016B	COIL	1	
VL701		EIR7QF016B	COIL	1	

Ref.No.		Part No.	Part Name & Description	Pcs	Remarks
VL702		EIR7QF015B	COIL	1	
VR1		VRV0064B501	V.RESISTOR 500	1	
VR3		VRV0109B202	V.RESISTOR 2K	1	
VR4		VRV0109B102	V.RESISTOR 1K	1	
VR5		VRV0109B203	V.RESISTOR 20K	1	
VR6		VRV0109B501	V.RESISTOR 500	1	
VR7		VRV0064B103	V.RESISTOR 10K	1	
VR8		VRV0109B503	V.RESISTOR 50K	1	
VR9		VRV0109B502	V.RESISTOR 5K	1	
VR10		VRV0109B503	V.RESISTOR 50K	1	
VR11		VRV0109B104	V.RESISTOR 100K	1	
VR201		VRV0064B501	V.RESISTOR 500	1	
VR202		VRV0109B203	V.RESISTOR 20K	1	
VR203		VRV0109B102	V.RESISTOR 1K	1	
VR204		VRV0109B501	V.RESISTOR 500	1	
VR205		VRV0109B503	V.RESISTOR 50K	1	
VR206		VRV0109B502	V.RESISTOR 5K	1	
VR207,08		VRV0109B503	V.RESISTOR 50K	2	
VR209		VRV0109B104	V.RESISTOR 100K	1	
VR301		VRV0109B501	V.RESISTOR 500	1	
VR302		VRV0109B102	V.RESISTOR 1K	1	
VR303		VRV0109B501	V.RESISTOR 500	1	
VR304		VRV0109B102	V.RESISTOR 1K	1	
VR309		VRV0109B101	V.RESISTOR 100	1	
VR310		VRV0109B502	V.RESISTOR 5K	1	
VR311		VRV0109B501	V.RESISTOR 500	1	
VR312		VRV0064B104	V.RESISTOR 100K	1	
VR315,16		VRV0064B502	V.RESISTOR 5K	2	
VR317		VRV0109B501	V.RESISTOR 500	1	
VR318		VRV0109B203	V.RESISTOR 20K	1	
VR319,20		VRV0109B102	V.RESISTOR 1K	2	
VR321		VRV0109B203	V.RESISTOR 20K	1	
VR322		VRV0109B102	V.RESISTOR 1K	1	
VR323		VRV0109B203	V.RESISTOR 20K	1	
VR324		VRV0109B102	V.RESISTOR 1K	1	
VR701,02		VRV0109B501	V.RESISTOR 500	2	
VR712,13		VRV0064B502	V.RESISTOR 5K	2	
VR714		VRV0109B501	V.RESISTOR 500	1	
VR715		VRV0109B203	V.RESISTOR 20K	1	
VR716,17		VRV0109B102	V.RESISTOR 1K	2	
VR718		VRV0109B203	V.RESISTOR 20K	1	
VR719		VRV0109B102	V.RESISTOR 1K	1	
VR720		VRV0109B203	V.RESISTOR 20K	1	
VR721		VRV0109B102	V.RESISTOR 1K	1	
			MISCELLANEOUS		
		VML2143	CARD PULLER	1	
		VML2144	CARD PULLER	1	
		VMS4174	PIN	6	
		VMZ1547	BARRIER	1	
		VSC3056	SHIELD CASE	1	
		VXA3966	P.C.B. SHIELD PLATE	1	
		XNG26E	NUT	4	
		XYNV3+K6FR	SCREW	6	
		XYN26+C12	SCREW	4	

Refer to the P.C.BOARDS LIST, page 6-1-1, before using this page.

Ref.No.		Part No.	Part Name & Description	Pcs	Remarks
	■	VEP83098C	P.C.BOARD W/COMPONENT		FOR AU-62-P
			W3 MOD & DEMOD		
			CAPACITORS		
C51		ECUM1H560JCN	C.CAPACITOR CH 50V 56P	1	
C62		ECEA1CU470	E.CAPACITOR 16V 47U	1	
C63		ECEA1CU101	E.CAPACITOR 16V 100U	1	
C64		ECUM1E104ZFN	C.CAPACITOR CH 25V 0.1U	1	
C65		ECEA1CU101	E.CAPACITOR 16V 100U	1	
C66		ECUM1E104ZFN	C.CAPACITOR CH 25V 0.1U	1	
C67,68		ECEA1CU101	E.CAPACITOR 16V 100U	2	
C69,70		ECEA1AU101	E.CAPACITOR 10V 100U	2	
C71		ECEA1CU470	E.CAPACITOR 16V 47U	1	
C72		ECEA1CU101	E.CAPACITOR 16V 100U	1	
C302		ECUM1H103KBN	C.CAPACITOR CH 50V 0.01U	1	
C303		ECUM1H220JCN	C.CAPACITOR CH 50V 22P	1	
C304		ECUM1H103KBN	C.CAPACITOR CH 50V 0.01U	1	
C306		ECUM1H220JCN	C.CAPACITOR CH 50V 22P	1	
C307		ECEA1AU101	E.CAPACITOR 10V 100U	1	
C308,09		ECUM1H103KBN	C.CAPACITOR CH 50V 0.01U	2	
C310		ECEA1AU101	E.CAPACITOR 10V 100U	1	
C311		ECUM1H103KBN	C.CAPACITOR CH 50V 0.01U	1	
C316		ECUM1E104ZFN	C.CAPACITOR CH 25V 0.1U	1	
C322		ECUM1E104ZFN	C.CAPACITOR CH 25V 0.1U	1	
C325		ECUM1E104ZFN	C.CAPACITOR CH 25V 0.1U	1	
C342		ECUM1H103KBN	C.CAPACITOR CH 50V 0.01U	1	
C343		ECUM1H120JCN	C.CAPACITOR CH 50V 12P	1	
C344		ECUM1H121JCN	C.CAPACITOR CH 50V 120P	1	
C345		ECUM1H100DCN	C.CAPACITOR CH 50V 10P	1	
C346		ECUM1H103KBN	C.CAPACITOR CH 50V 0.01U	1	
C347,48		ECEA1AU101	E.CAPACITOR 10V 100U	2	
C349		ECUM1H103KBN	C.CAPACITOR CH 50V 0.01U	1	
C350		ECUM1H181JCN	C.CAPACITOR CH 50V 180P	1	
C351		ECUM1H221JCN	C.CAPACITOR CH 50V 220P	1	
C352		ECUM1H103KBN	C.CAPACITOR CH 50V 0.01U	1	
C353		ECUM1H101JCN	C.CAPACITOR CH 50V 100P	1	
C354,55		ECUM1H103KBN	C.CAPACITOR CH 50V 0.01U	2	
C356		ECUM1E104ZFN	C.CAPACITOR CH 25V 0.1U	1	
C357		ECEA1HU2R2	E.CAPACITOR 50V 2.2U	1	
C358		ECEA1AU101	E.CAPACITOR 10V 100U	1	
C380		ECUM1E104ZFN	C.CAPACITOR CH 25V 0.1U	1	
C381		ECUM1H103KBN	C.CAPACITOR CH 50V 0.01U	1	
C382		ECUM1E104ZFN	C.CAPACITOR CH 25V 0.1U	1	
C383		ECEA1AU101	E.CAPACITOR 10V 100U	1	
C384		ECUM1H103KBN	C.CAPACITOR CH 50V 0.01U	1	
C386		ECUM1H050DCN	C.CAPACITOR CH 50V 50P	1	
C387		ECUM1H560JCN	C.CAPACITOR CH 50V 56P	1	
C388		ECUM1H121JCN	C.CAPACITOR CH 50V 120P	1	
C389		ECUM1H103KBN	C.CAPACITOR CH 50V 0.01U	1	
C390		ECUM1H101JCN	C.CAPACITOR CH 50V 100P	1	
C391		ECUM1H100DCN	C.CAPACITOR CH 50V 10P	1	
C392		ECUM1H103KBN	C.CAPACITOR CH 50V 0.01U	1	
C393		ECEA1AU101	E.CAPACITOR 10V 100U	1	
C394		ECUM1H103KBN	C.CAPACITOR CH 50V 0.01U	1	
C395		ECUM1E104ZFN	C.CAPACITOR CH 25V 0.1U	1	
C396,97		ECUM1H103KBN	C.CAPACITOR CH 50V 0.01U	2	
C398		ECUM1H150JCN	C.CAPACITOR CH 50V 15P	1	
C399		ECUM1H103KBN	C.CAPACITOR CH 50V 0.01U	1	
C400		ECUM1E104ZFN	C.CAPACITOR CH 25V 0.1U	1	
C401-03		ECUM1H103KBN	C.CAPACITOR CH 50V 0.01U	3	
C404		ECEA1AU101	E.CAPACITOR 10V 100U	1	
C405-07		ECUM1E104ZFN	C.CAPACITOR CH 25V 0.1U	3	
C408,09		ECUM1H330JCN	C.CAPACITOR CH 50V 33P	2	
C410		ECEA1AU471	E.CAPACITOR 10V 470U	1	
C411		ECUM1E104ZFN	C.CAPACITOR CH 25V 0.1U	1	
C412		ECUM1H221JCN	C.CAPACITOR CH 50V 220P	1	
C413		ECEA1AU101	E.CAPACITOR 10V 100U	1	
C414		ECUM1H470JCN	C.CAPACITOR CH 50V 47P	1	

Ref.No.		Part No.	Part Name & Description	Pcs	Remarks
C415		ECUM1H180JCN	C.CAPACITOR CH 50V 18P	1	
C416		ECUM1H181JCN	C.CAPACITOR CH 50V 180P	1	
C417,18		ECUM1E104ZFN	C.CAPACITOR CH 25V 0.1U	2	
C419		ECUM1H331JCN	C.CAPACITOR CH 50V 330P	1	
C420		ECUM1H220JCN	C.CAPACITOR CH 50V 22P	1	
C421		ECUM1H680JCN	C.CAPACITOR CH 50V 68P	1	
C422		ECUM1H330JCN	C.CAPACITOR CH 50V 33P	1	
C423		ECEA1AU101	E.CAPACITOR 10V 100U	1	
C424		ECEA1CU100	E.CAPACITOR 16V 10U	1	
C425		ECUM1H221JCN	C.CAPACITOR CH 50V 220P	1	
C426		VCM0044	M.CAPACITOR 130P	1	
C427		VCM0023	M.CAPACITOR 379P	1	
C428		ECUM1H680JCN	C.CAPACITOR CH 50V 68P	1	
C432		ECEA1AU221	E.CAPACITOR 10V 220U	1	
C433		ECUM1H050DCN	C.CAPACITOR CH 50V 50P	1	
C434		ECUM1H220JCN	C.CAPACITOR CH 50V 22P	1	
C435		ECUM1H020CCN	C.CAPACITOR CH 50V 2P	1	
C436,37		ECUM1E104ZFN	C.CAPACITOR CH 25V 0.1U	2	
C438		VCM0023	M.CAPACITOR 379P	1	
C439		VCM0057	M.CAPACITOR 169P	1	
C440		ECUM1H100DCN	C.CAPACITOR CH 50V 10P	1	
C442,43		ECEA1CU221	E.CAPACITOR 16V 220U	2	
C444,45		ECUM1H103KBN	C.CAPACITOR CH 50V 0.01U	2	
C450		ECEA1AU101	E.CAPACITOR 10V 100U	1	
C453		ECUM1E104ZFN	C.CAPACITOR CH 25V 0.1U	1	
C467		ECUM1E104ZFN	C.CAPACITOR CH 25V 0.1U	1	
C468		ECUM1H103KBN	C.CAPACITOR CH 50V 0.01U	1	
C469		ECUM1H220JCN	C.CAPACITOR CH 50V 22P	1	
C701,02		ECUM1H103KBN	C.CAPACITOR CH 50V 0.01U	2	
C703		ECEA1AU101	E.CAPACITOR 10V 100U	1	
C704,05		ECUM1H103KBN	C.CAPACITOR CH 50V 0.01U	2	
C725		ECCF1H180JC	C.CAPACITOR 50V 18P	1	
C726		ECUM1H103KBN	C.CAPACITOR CH 50V 0.01U	1	
C727		ECUM1E104ZFN	C.CAPACITOR CH 25V 0.1U	1	
C728		ECUM1H220JCN	C.CAPACITOR CH 50V 22P	1	
C729		ECUM1H121JCN	C.CAPACITOR CH 50V 120P	1	
C730,31		ECUM1H103KBN	C.CAPACITOR CH 50V 0.01U	2	
C732		ECUM1H101JCN	C.CAPACITOR CH 50V 100P	1	
C733		ECEA1AU101	E.CAPACITOR 10V 100U	1	
C734		ECUM1H331JCN	C.CAPACITOR CH 50V 330P	1	
C735		ECEA1AU101	E.CAPACITOR 10V 100U	1	
C736		ECUM1H103KBN	C.CAPACITOR CH 50V 0.01U	1	
C737		ECUM1H121JCN	C.CAPACITOR CH 50V 120P	1	
C738		ECUM1H103KBN	C.CAPACITOR CH 50V 0.01U	1	
C744		ECUM1E104ZFN	C.CAPACITOR CH 25V 0.1U	1	
C745		ECUM1H103KBN	C.CAPACITOR CH 50V 0.01U	1	
C746		ECUM1E104ZFN	C.CAPACITOR CH 25V 0.1U	1	
C747		ECEA1AU101	E.CAPACITOR 10V 100U	1	
C749		ECUM1H561JCN	C.CAPACITOR CH 50V 560P	1	
C750		ECUM1H331JCN	C.CAPACITOR CH 50V 330P	1	
C751		ECUM1H221JCN	C.CAPACITOR CH 50V 220P	1	
C752		ECUM1H561JCN	C.CAPACITOR CH 50V 560P	1	
C753		ECUM1H390JCN	C.CAPACITOR CH 50V 39P	1	
C754		ECUM1H181JCN	C.CAPACITOR CH 50V 180P	1	
C755		ECUM1H330JCN	C.CAPACITOR CH 50V 33P	1	
C756		ECUM1H101JCN	C.CAPACITOR CH 50V 100P	1	
C757		ECUM1H330JCN	C.CAPACITOR CH 50V 33P	1	
C758		ECUM1H050DCN	C.CAPACITOR CH 50V 50P	1	
C759		ECUM1E104ZFN	C.CAPACITOR CH 25V 0.1U	1	
C760		ECUM1H680JCN	C.CAPACITOR CH 50V 68P	1	
C761		ECUM1H121JCN	C.CAPACITOR CH 50V 120P	1	
C762		ECUM1H103KBN	C.CAPACITOR CH 50V 0.01U	1	
C763		ECUM1H121JCN	C.CAPACITOR CH 50V 120P	1	
C764		ECUM1H100DCN	C.CAPACITOR CH 50V 10P	1	
C765,66		ECUM1H103KBN	C.CAPACITOR CH 50V 0.01U	2	
C767		ECEA1AU101	E.CAPACITOR 10V 100U	1	
C768,69		ECUM1H103KBN	C.CAPACITOR CH 50V 0.01U	2	
C770		ECUM1H150JCN	C.CAPACITOR CH 50V 15P	1	
C771		ECUM1H681JCN	C.CAPACITOR CH 50V 680P	1	
C772		ECUM1E104ZFN	C.CAPACITOR CH 25V 0.1U	1	
C773-75		ECUM1H103KBN	C.CAPACITOR CH 50V 0.01U	3	
C776		ECUM1E104ZFN	C.CAPACITOR CH 25V 0.1U	1	
C777		ECEA1AU101	E.CAPACITOR 10V 100U	1	
C778,79		ECUM1E104ZFN	C.CAPACITOR CH 25V 0.1U	2	
C780,81		ECUM1H470JCN	C.CAPACITOR CH 50V 47P	2	

Refer to the P.C.BOARDS LIST, page 6-1-1, before using this page.

Ref.No.		Part No.	Part Name & Description	Pcs	Remarks
C782		ECEA1AU471	E.CAPACITOR 10V 470U	1	
C783		ECUM1E104ZFN	C.CAPACITOR CH 25V 0.1U	1	
C784		ECUM1H221JCN	C.CAPACITOR CH 50V 220P	1	
C785		ECEA1AU101	E.CAPACITOR 10V 100U	1	
C786		ECUM1H121JCN	C.CAPACITOR CH 50V 120P	1	
C787		ECUM1H100DCN	C.CAPACITOR CH 50V 10P	1	
C788		ECUM1H331JCN	C.CAPACITOR CH 50V 330P	1	
C789,90		ECUM1E104ZFN	C.CAPACITOR CH 25V 0.1U	2	
C791		ECUM1H331JCN	C.CAPACITOR CH 50V 330P	1	
C792		ECUM1H220JCN	C.CAPACITOR CH 50V 22P	1	
C793		ECUM1H680JCN	C.CAPACITOR CH 50V 68P	1	
C794		ECUM1H330JCN	C.CAPACITOR CH 50V 33P	1	
C796		ECEA1CU100	E.CAPACITOR 16V 10U	1	
C797		VCM0046	M.CAPACITOR 229P	1	
C798		ECUM1H100DCN	C.CAPACITOR CH 50V 10P	1	
C799		ECEA1AU221	E.CAPACITOR 10V 220U	1	
C800		ECUM1H050DCN	C.CAPACITOR CH 50V 50P	1	
C801		ECUM1H020CCN	C.CAPACITOR CH 50V 2P	1	
C802		ECUM1H121JCN	C.CAPACITOR CH 50V 120P	1	
C803,04		ECUM1E104ZFN	C.CAPACITOR CH 25V 0.1U	2	
C805		ECUM1H100DCN	C.CAPACITOR CH 50V 10P	1	
C806		VCM0057	M.CAPACITOR 169P	1	
C807		VCM0024	M.CAPACITOR 270P	1	
C808		ECEA1CU221	E.CAPACITOR 16V 220U	1	
C810		ECEA1CU221	E.CAPACITOR 16V 220U	1	
C811,12		ECUM1H103KBN	C.CAPACITOR CH 50V 0.01U	2	
C817		ECEA1AU101	E.CAPACITOR 10V 100U	1	
C818		ECUM1H220JCN	C.CAPACITOR CH 50V 22P	1	
C821		ECUM1E104ZFN	C.CAPACITOR CH 25V 0.1U	1	
D301		MA151WK	DIODE	1	
D303		MA151K	DIODE	1	
D305		MA151K	DIODE	1	
D306,07		MA151WK	DIODE	2	
D308,09		MA151WA	DIODE	2	
D701		MA151WK	DIODE	1	
D702,03		MA151K	DIODE	2	
D705		MA151K	DIODE	1	
D706		MA151WK	DIODE	1	
DL301		VLD0191	DELAY	1	
DL701		VLD0191	DELAY	1	
FL302		VLF0787	FILTER	1	
FL303		VLF0819	FILTER	1	
FL701		VLF0821	FILTER	1	
IC10		AN79N09	IC	1	
IC11,12		AN79M05F	IC	2	
IC13		AN78M05F	IC	1	
IC14		AN78N05	IC	1	
IC15		AN78N09	IC	1	
IC301		AN6308S	IC	1	
IC306		NJM1496M	IC	1	
IC307		UPD4053BG	IC	1	
IC311-15		10116D	IC	5	
IC316		SN74LS123NS	IC	1	
IC317		MC74HC00AF	IC	1	
IC319		NE5539D	IC	1	
IC326		RC082BM	IC	1	
IC701		AN6308S	IC	1	
IC705		NJM1496M	IC	1	
IC706		UPD4053BG	IC	1	
IC708-12		10116D	IC	5	
IC716		NE5539D	IC	1	

Ref.No.		Part No.	Part Name & Description	Pcs	Remarks
L301		VLQEL05F101K	COIL 100UH	1	
L302,03		VLQEL05S150J	COIL 15UH	2	
L304		VLQEL05F101K	COIL 100UH	1	
L308		VLQEL05S2R7J	COIL 2.7UH	1	
L309,10		VLQEL05F101K	COIL 100UH	2	
L311		VLQEL05S220J	COIL 22UH	1	
L312		VLQEL05S3R3J	COIL 3.3UH	1	
L313		VLQEL05F101K	COIL 100UH	1	
L318		VLQEL05F101K	COIL 100UH	1	
L320		VLQEL05S2R2J	COIL 2.2UH	1	
L321		VLQEL05S120J	COIL 12UH	1	
L322		VLQEL05S5R6J	COIL 5.6UH	1	
L323		VLQEL05F101K	COIL 100UH	1	
L324		VLQEL05SR47M	COIL 0.47UH	1	
L325-27		VLQEL05F101K	COIL 100UH	3	
L328		VLQEL05S6R8J	COIL 6.8UH	1	
L329		VLQEL05F101K	COIL 100UH	1	
L333-35		VLQEL05F101K	COIL 100UH	3	
L701		VLQEL05F101K	COIL 100UH	1	
L709		VLQEL05S4R7J	COIL 4.7UH	1	
L710		VLQEL05F101K	COIL 100UH	1	
L711		VLQEL05S560J	COIL 56UH	1	
L712		VLQEL05F101K	COIL 100UH	1	
L713		VLQEL05S3R9J	COIL 3.9UH	1	
L715		VLQEL05F101K	COIL 100UH	1	
L716		VLQEL05S181J	COIL 180UH	1	
L717		VLQEL05S680J	COIL 68UH	1	
L718		VLQEL05S3R3J	COIL 3.3UH	1	
L719,20		VLQEL05S8R2J	COIL 8.2UH	2	
L721		VLQEL05S2R2J	COIL 2.2UH	1	
L722		VLQEL05S150J	COIL 15UH	1	
L723		VLQEL05S8R2J	COIL 8.2UH	1	
L724		VLQEL05F101K	COIL 100UH	1	
L725		VLQEL05SR47M	COIL 0.47UH	1	
L726-28		VLQEL05F101K	COIL 100UH	3	
L729		VLQEL05S150J	COIL 15UH	1	
L731-33		VLQEL05F101K	COIL 100UH	3	
Q301-04		2SC2295	TRANSISTOR CHIP	4	(B,C)
Q313,14		2SC2295	TRANSISTOR CHIP	2	(B,C)
Q315		2SA1022	TRANSISTOR CHIP	1	(B,C)
Q316		2SC2295	TRANSISTOR CHIP	1	(B,C)
Q317,18		2SA1022	TRANSISTOR CHIP	2	(B,C)
Q319		IMX4	TRANSISTOR	1	
Q320		UN2113	TRANSISTOR-RESISTOR	1	
Q324		2SC2295	TRANSISTOR CHIP	1	(B,C)
Q325		2SA1022	TRANSISTOR CHIP	1	(B,C)
Q326		2SC2295	TRANSISTOR CHIP	1	(B,C)
Q327,28		2SA1022	TRANSISTOR CHIP	2	(B,C)
Q329		2SC2295	TRANSISTOR CHIP	1	(B,C)
Q330		2SA1022	TRANSISTOR CHIP	1	(B,C)
Q331-38		2SC2295	TRANSISTOR CHIP	8	(B,C)
Q339,40		UN2213	TRANSISTOR-RESISTOR	2	
Q341		2SA1462	TRANSISTOR	1	
Q342,43		2SC3757	TRANSISTOR	2	(Q,R)
Q344		2SC2295	TRANSISTOR CHIP	1	(B,C)
Q345		2SA1022	TRANSISTOR CHIP	1	(B,C)
Q346		2SC2480	TRANSISTOR	1	
Q347		2SA1462	TRANSISTOR	1	
Q351		2SK374	TRANSISTOR	1	
Q352		2SC3757	TRANSISTOR	1	(Q,R)
Q353		2SA1226	TRANSISTOR	1	
Q354		2SD601	TRANSISTOR CHIP	1	(Q,R)
Q355		2SA1022	TRANSISTOR CHIP	1	(B,C)
Q356-61		UN2113	TRANSISTOR-RESISTOR	6	
Q376		2SA1462	TRANSISTOR	1	
Q377		2SA1226	TRANSISTOR	1	
Q378		2SB709	TRANSISTOR CHIP	1	(Q,R)
Q379		2SC2480	TRANSISTOR	1	
Q382-84		2SC3757	TRANSISTOR	3	(Q,R)
Q385		2SC2295	TRANSISTOR CHIP	1	(B,C)
Q701,02		2SA1022	TRANSISTOR CHIP	2	(B,C)

Refer to the P.C.BOARDS LIST, page 6-1-1, before using this page.

Ref.No.		Part No.	Part Name & Description	Pcs	Remarks
Q710,11		2SC2295	TRANSISTOR CHIP	2	(B,C)
Q712		2SA1022	TRANSISTOR CHIP	1	(B,C)
Q713		2SC2295	TRANSISTOR CHIP	1	(B,C)
Q714,15		2SA1022	TRANSISTOR CHIP	2	(B,C)
Q716		2SC2295	TRANSISTOR CHIP	1	(B,C)
Q717		2SA1022	TRANSISTOR CHIP	1	(B,C)
Q718		2SC2295	TRANSISTOR CHIP	1	(B,C)
Q719,20		2SA1022	TRANSISTOR CHIP	2	(B,C)
Q721		2SC2295	TRANSISTOR CHIP	1	(B,C)
Q722		2SA1022	TRANSISTOR CHIP	1	(B,C)
Q723-30		2SC2295	TRANSISTOR CHIP	8	(B,C)
Q731		UN2213	TRANSISTOR-RESISTOR	1	
Q732		2SA1462	TRANSISTOR	1	
Q733		2SC2295	TRANSISTOR CHIP	1	(B,C)
Q734		2SA1022	TRANSISTOR CHIP	1	(B,C)
Q735		2SC2480	TRANSISTOR	1	
Q736		2SA1462	TRANSISTOR	1	
Q740		2SK374	TRANSISTOR	1	
Q741		2SC3757	TRANSISTOR	1	(Q,R)
Q742		2SA1226	TRANSISTOR	1	
Q743		2SD601	TRANSISTOR CHIP	1	(Q,R)
Q754		2SA1462	TRANSISTOR	1	
Q755		2SA1226	TRANSISTOR	1	
Q756		2SB709	TRANSISTOR CHIP	1	(Q,R)
Q757		2SC2480	TRANSISTOR	1	
Q758-60		2SC3757	TRANSISTOR	3	(Q,R)
			RESISTORS		
R20		ERJ6GEYJ472	M.RESISTOR CH 1/10W 4.7K	1	
R91		ERJ6GEYJ472	M.RESISTOR CH 1/10W 4.7K	1	
R101		ERJ6GEYJ470	M.RESISTOR CH 1/10W 47	1	
R301		ERJ6GEYJ470	M.RESISTOR CH 1/10W 47	1	
R302		ERJ6GEYJ681	M.RESISTOR CH 1/10W 680	1	
R303		ERJ6GEYJ102	M.RESISTOR CH 1/10W 1K	1	
R304		ERJ6GEYJ332	M.RESISTOR CH 1/10W 3.3K	1	
R305		ERJ6GEYJ470	M.RESISTOR CH 1/10W 47	1	
R306		ERJ6GEYJ681	M.RESISTOR CH 1/10W 680	1	
R307		ERJ6GEYJ102	M.RESISTOR CH 1/10W 1K	1	
R308		ERJ6GEYJ332	M.RESISTOR CH 1/10W 3.3K	1	
R309		ERJ6GEYJ222	M.RESISTOR CH 1/10W 2.2K	1	
R310		ERJ6GEYJ470	M.RESISTOR CH 1/10W 47	1	
R332		ERJ6GEYJ152	M.RESISTOR CH 1/10W 1.5K	1	
R333,34		ERJ6GEYG471	M.RESISTOR CH 1/10W 470	2	
R335,36		ERJ6GEYJ470	M.RESISTOR CH 1/10W 47	2	
R337,38		ERJ6GEYJ222	M.RESISTOR CH 1/10W 2.2K	2	
R339,40		ERJ6GEYJ271	M.RESISTOR CH 1/10W 270	2	
R341		ERJ6GEYJ470	M.RESISTOR CH 1/10W 47	1	
R342		ERJ6GEYJ271	M.RESISTOR CH 1/10W 270	1	
R343		ERJ6GEYJ821	M.RESISTOR CH 1/10W 820	1	
R344		ERJ6GEYJ470	M.RESISTOR CH 1/10W 47	1	
R345		ERJ6GEYJ222	M.RESISTOR CH 1/10W 2.2K	1	
R346		ERJ6GEYJ102	M.RESISTOR CH 1/10W 1K	1	
R347		ERJ6GEYG331	M.RESISTOR CH 1/10W 330	1	
R348		ERJ6GEYJ153	M.RESISTOR CH 1/10W 15K	1	
R349		ERJ6GEYJ333	M.RESISTOR CH 1/10W 33K	1	
R350,51		ERJ6GEYJ220	M.RESISTOR CH 1/10W 22	2	
R352		ERJ6GEYJ470	M.RESISTOR CH 1/10W 47	1	
R353		ERJ6GEYJ152	M.RESISTOR CH 1/10W 1.5K	1	
R354		ERJ6GEYJ221	M.RESISTOR CH 1/10W 220	1	
R355		ERJ6GEYJ102	M.RESISTOR CH 1/10W 1K	1	
R356		ERJ6GEYJ221	M.RESISTOR CH 1/10W 220	1	
R357		ERJ6GEYJ222	M.RESISTOR CH 1/10W 2.2K	1	
R358		ERJ6GEYJ101	M.RESISTOR CH 1/10W 100	1	
R359		ERJ6GEYJ472	M.RESISTOR CH 1/10W 4.7K	1	
R360,61		ERJ6GEYJ473	M.RESISTOR CH 1/10W 47K	2	
R362		ERJ6GEYJ472	M.RESISTOR CH 1/10W 4.7K	1	
R363		ERJ6GEYJ223	M.RESISTOR CH 1/10W 22K	1	
R364		ERJ6GEYJ273	M.RESISTOR CH 1/10W 27K	1	
R365		ERJ6GEYJ473	M.RESISTOR CH 1/10W 47K	1	
R366		ERJ6GEYJ223	M.RESISTOR CH 1/10W 22K	1	
R367		ERJ6GEYJ104	M.RESISTOR CH 1/10W 100K	1	
R368		ERJ6GEYJ472	M.RESISTOR CH 1/10W 4.7K	1	
R369		ERJ6GEYJ103	M.RESISTOR CH 1/10W 10K	1	

Ref.No.		Part No.	Part Name & Description	Pcs	Remarks
R370		ERJ6GEYJ223	M.RESISTOR CH 1/10W 22K	1	
R371		ERJ6GEYJ682	M.RESISTOR CH 1/10W 6.8K	1	
R397,98		ERJ6GEYJ470	M.RESISTOR CH 1/10W 47	2	
R399		ERJ6GEYJ472	M.RESISTOR CH 1/10W 4.7K	1	
R400		ERJ6GEYJ152	M.RESISTOR CH 1/10W 1.5K	1	
R401-04		ERJ6GEYG621	M.RESISTOR CH 1/10W 620	4	
R405		ERJ6GEYJ152	M.RESISTOR CH 1/10W 1.5K	1	
R406		ERJ6GEYJ562	M.RESISTOR CH 1/10W 5.6K	1	
R407		ERJ6GEYG301	M.RESISTOR CH 1/10W 300	1	
R409		ERJ6GEYJ470	M.RESISTOR CH 1/10W 47	1	
R410		ERJ6GEYJ102	M.RESISTOR CH 1/10W 1K	1	
R411		ERJ6GEYJ681	M.RESISTOR CH 1/10W 680	1	
R412		ERJ6GEYJ102	M.RESISTOR CH 1/10W 1K	1	
R413		ERJ6GEYJ152	M.RESISTOR CH 1/10W 1.5K	1	
R414		ERJ6GEYJ470	M.RESISTOR CH 1/10W 47	1	
R415		ERJ6GEYJ221	M.RESISTOR CH 1/10W 220	1	
R416,17		ERJ6GEYJ222	M.RESISTOR CH 1/10W 2.2K	2	
R418		ERJ6GEYG331	M.RESISTOR CH 1/10W 330	1	
R419		ERJ6GEYJ332	M.RESISTOR CH 1/10W 3.3K	1	
R420		ERJ6GEYJ470	M.RESISTOR CH 1/10W 47	1	
R421		ERJ6GEYJ102	M.RESISTOR CH 1/10W 1K	1	
R422		ERJ6GEYJ471	M.RESISTOR CH 1/10W 470	1	
R423		ERJ6GEYJ102	M.RESISTOR CH 1/10W 1K	1	
R424		ERJ6GEYJ222	M.RESISTOR CH 1/10W 2.2K	1	
R425,26		ERJ6GEYJ470	M.RESISTOR CH 1/10W 47	2	
R427-34		ERJ6GEYJ102	M.RESISTOR CH 1/10W 1K	8	
R435,36		ERJ6GEYJ332	M.RESISTOR CH 1/10W 3.3K	2	
R437		ERJ6GEYJ101	M.RESISTOR CH 1/10W 100	1	
R438		ERJ6GEYJ471	M.RESISTOR CH 1/10W 470	1	
R439		ERJ6GEYJ471	M.RESISTOR CH 1/10W 470	1	
R440		ERJ6GEYJ470	M.RESISTOR CH 1/10W 47	1	
R441,42		ERJ6GEYJ681	M.RESISTOR CH 1/10W 680	2	
R443,44		ERJ6GEYJ101	M.RESISTOR CH 1/10W 100	2	
R445		ERJ6GEYJ470	M.RESISTOR CH 1/10W 47	1	
R446		ERJ6GEYJ151	M.RESISTOR CH 1/10W 150	1	
R447,48		ERJ6GEYJ222	M.RESISTOR CH 1/10W 2.2K	2	
R449		ERJ6GEYJ470	M.RESISTOR CH 1/10W 47	1	
R450,51		ERJ6GEYJ222	M.RESISTOR CH 1/10W 2.2K	2	
R452,53		ERJ6GEYJ470	M.RESISTOR CH 1/10W 47	2	
R454-65		ERJ6GEYJ102	M.RESISTOR CH 1/10W 1K	12	
R466		ERJ6GEYJ683	M.RESISTOR CH 1/10W 68K	1	
R467,68		ERJ6GEYJ103	M.RESISTOR CH 1/10W 10K	2	
R469,70		ERJ6GEYJ150	M.RESISTOR CH 1/10W 15	2	
R471,72		ERJ6GEYJ332	M.RESISTOR CH 1/10W 3.3K	2	
R473		ERJ6GEYJ101	M.RESISTOR CH 1/10W 100	1	
R474		ERDS2TJ222	C.RESISTOR 1/4W 2.2K	1	
R475		ERJ6GEYJ102	M.RESISTOR CH 1/10W 1K	1	
R476		ERJ6GEYJ471	M.RESISTOR CH 1/10W 470	1	
R478		ERJ6GEYJ102	M.RESISTOR CH 1/10W 1K	1	
R479		ERJ6GEYJ222	M.RESISTOR CH 1/10W 2.2K	1	
R480,81		ERJ6GEYJ471	M.RESISTOR CH 1/10W 470	2	
R482		ERJ6GEYJ470	M.RESISTOR CH 1/10W 47	1	
R483,84		ERJ6GEYJ333	M.RESISTOR CH 1/10W 33K	2	
R485,86		ERJ6GEYJ102	M.RESISTOR CH 1/10W 1K	2	
R487		ERJ6GEYJ222	M.RESISTOR CH 1/10W 2.2K	1	
R488		ERJ6GEYJ221	M.RESISTOR CH 1/10W 220	1	
R489		ERJ6GEYJ392	M.RESISTOR CH 1/10W 3.9K	1	
R490		ERJ6GEYJ470	M.RESISTOR CH 1/10W 47	1	
R491		ERJ6GEYJ183	M.RESISTOR CH 1/10W 18K	1	
R492		ERJ6GEYJ151	M.RESISTOR CH 1/10W 150	1	
R493		ERJ6GEYJ152	M.RESISTOR CH 1/10W 1.5K	1	
R494,95		ERJ6GEYJ101	M.RESISTOR CH 1/10W 100	2	
R496		ERJ6GEYJ222	M.RESISTOR CH 1/10W 2.2K	1	
R497		ERJ6GEYJ102	M.RESISTOR CH 1/10W 1K	1	
R498		ERJ6GEYJ101	M.RESISTOR CH 1/10W 100	1	
R499		ERJ6GEYJ332	M.RESISTOR CH 1/10W 3.3K	1	
R500		ERJ6GEYJ223	M.RESISTOR CH 1/10W 22K	1	
R501		ERJ6GEYJ332	M.RESISTOR CH 1/10W 3.3K	1	
R502		ERJ6GEYJ472	M.RESISTOR CH 1/10W 4.7K	1	
R503		ERJ6GEYJ103	M.RESISTOR CH 1/10W 10K	1	
R504		ERJ6GEYJ683	M.RESISTOR CH 1/10W 68K	1	
R505,06		ERJ6GEYJ473	M.RESISTOR CH 1/10W 47K	2	
R507		ERJ6GEYJ471	M.RESISTOR CH 1/10W 470	1	
R509		ERJ6GEYJ221	M.RESISTOR CH 1/10W 220	1	
R510		ERJ6GEYJ392	M.RESISTOR CH 1/10W 3.9K	1	

Refer to the P.C.BOARDS LIST, page 6-1-1, before using this page.

Ref.No.		Part No.	Part Name & Description	Pcs	Remarks
R511		VRE0034E27B	M.RESISTOR CH 1/10W 1.87K	1	
R512		VRE0034E751	M.RESISTOR CH 1/10W 750	1	
R513		ERJ6GEYJ332	M.RESISTOR CH 1/10W 3.3K	1	
R514		ERJ6GEYJ152	M.RESISTOR CH 1/10W 1.5K	1	
R515		ERJ6GEYJ682	M.RESISTOR CH 1/10W 6.8K	1	
R516		ERJ6GEYG301	M.RESISTOR CH 1/10W 300	1	
R517		ERJ6GEY0R00	M.RESISTOR CH 1/10W 0	1	
R518		ERJ6GEYG471	M.RESISTOR CH 1/10W 470	1	
R519		ERJ6GEYJ332	M.RESISTOR CH 1/10W 3.3K	1	
R520		ERJ6GEYJ101	M.RESISTOR CH 1/10W 100	1	
R521		ERJ6GEYJ151	M.RESISTOR CH 1/10W 150	1	
R522		VRE0034E26A	M.RESISTOR CH 1/10W 182	1	
R523		ERJ6GEYJ102	M.RESISTOR CH 1/10W 1K	1	
R524		VRE0034E89A	M.RESISTOR CH 1/10W 825	1	
R525		VRE0034E21B	M.RESISTOR CH 1/10W 1.62K	1	
R526,27		ERJ6GEYJ470	M.RESISTOR CH 1/10W 47	2	
R528		ERJ6GEYJ101	M.RESISTOR CH 1/10W 100	1	
R529		ERJ6GEYJ102	M.RESISTOR CH 1/10W 1K	1	
R530		ERJ6GEYJ681	M.RESISTOR CH 1/10W 680	1	
R531,32		ERJ6GEYJ273	M.RESISTOR CH 1/10W 27K	2	
R533,34		ERJ6GEYJ183	M.RESISTOR CH 1/10W 18K	2	
R535,36		ERJ6GEYJ221	M.RESISTOR CH 1/10W 220	2	
R537		ERJ6GEYG243	M.RESISTOR CH 1/10W 24K	1	
R549		ERJ6GEYJ470	M.RESISTOR CH 1/10W 47	1	
R550		ERJ6GEYJ472	M.RESISTOR CH 1/10W 4.7K	1	
R551		ERJ6GEYJ473	M.RESISTOR CH 1/10W 47K	1	
R552		ERJ6GEYJ332	M.RESISTOR CH 1/10W 3.3K	1	
R553		ERJ6GEYJ471	M.RESISTOR CH 1/10W 470	1	
R554		ERJ6GEYJ102	M.RESISTOR CH 1/10W 1K	1	
R555		ERJ6GEYJ472	M.RESISTOR CH 1/10W 4.7K	1	
R556		ERJ6GEYJ122	M.RESISTOR CH1/10W 1.2K	1	
R557		ERDS2TJ152	C.RESISTOR 1/4W 1.5K	1	
R558		ERJ6GEYJ470	M.RESISTOR CH 1/10W 47	1	
R559		ERJ6GEYJ152	M.RESISTOR CH 1/10W 1.5K	1	
R560		ERJ6GEYJ470	M.RESISTOR CH 1/10W 47	1	
R561-63		ERJ6GEYJ473	M.RESISTOR CH 1/10W 47K	3	
R564		ERJ6GEYJ222	M.RESISTOR CH 1/10W 2.2K	1	
R565		ERJ6GEYJ223	M.RESISTOR CH 1/10W 22K	1	
R566		ERJ6GEYJ222	M.RESISTOR CH 1/10W 2.2K	1	
R567		ERJ6GEYJ223	M.RESISTOR CH 1/10W 22K	1	
R620		ERJ6GEYJ101	M.RESISTOR CH 1/10W 100	1	
R624-26		ERJ6GEYJ103	M.RESISTOR CH 1/10W 10K	3	
R627		ERJ6GEYJ472	M.RESISTOR CH 1/10W 4.7K	1	
R628		ERJ6GEYJ223	M.RESISTOR CH 1/10W 22K	1	
R629		ERJ6GEYJ472	M.RESISTOR CH 1/10W 4.7K	1	
R630,31		ERJ6GEYJ101	M.RESISTOR CH 1/10W 100	2	
R633		ERJ6GEYJ331	M.RESISTOR CH 1/10W 330	1	
R636		ERJ6GEYJ470	M.RESISTOR CH 1/10W 47	1	
R637		ERJ6GEYJ102	M.RESISTOR CH 1/10W 1K	1	
R638		ERJ6GEY0R00	M.RESISTOR CH 1/10W 0	1	
R639,40		ERDS2TJ331	C.RESISTOR 1/4W 330	2	
R643		ERDS2TJ331	C.RESISTOR 1/4W 330	1	
R701		ERJ6GEYJ470	M.RESISTOR CH 1/10W 47	1	
R702		ERJ6GEYJ102	M.RESISTOR CH 1/10W 1K	1	
R703		ERJ6GEYJ821	M.RESISTOR CH 1/10W 820	1	
R704		ERJ6GEY0R00	M.RESISTOR CH 1/10W 0	1	
R705		ERJ6GEYJ332	M.RESISTOR CH 1/10W 3.3K	1	
R712		ERJ6GEYJ470	M.RESISTOR CH 1/10W 47	1	
R723,24		ERJ6GEYJ101	M.RESISTOR CH 1/10W 100	2	
R725		ERJ6GEYJ102	M.RESISTOR CH 1/10W 1K	1	
R726		ERJ6GEYJ470	M.RESISTOR CH 1/10W 47	1	
R727		ERJ6GEYG471	M.RESISTOR CH 1/10W 470	1	
R728,29		ERJ6GEYJ470	M.RESISTOR CH 1/10W 47	2	
R730		ERJ6GEYG471	M.RESISTOR CH 1/10W 470	1	
R731		ERJ6GEYJ222	M.RESISTOR CH 1/10W 2.2K	1	
R732,33		ERJ6GEYG391	M.RESISTOR CH 1/10W 390	2	
R734		ERJ6GEYJ222	M.RESISTOR CH 1/10W 2.2K	1	
R735		ERJ6GEYJ470	M.RESISTOR CH 1/10W 47	1	
R736		ERJ6GEYJ271	M.RESISTOR CH 1/10W 270	1	
R737		ERJ6GEYJ102	M.RESISTOR CH 1/10W 1K	1	
R738		ERJ6GEYJ821	M.RESISTOR CH 1/10W 820	1	
R739		ERJ6GEYJ470	M.RESISTOR CH 1/10W 47	1	
R740		ERJ6GEYJ222	M.RESISTOR CH 1/10W 2.2K	1	
R741		ERJ6GEYJ102	M.RESISTOR CH 1/10W 1K	1	
R742		ERJ6GEYG331	M.RESISTOR CH 1/10W 330	1	
R743		ERJ6GEYJ153	M.RESISTOR CH 1/10W 15K	1	
R744		ERJ6GEYJ473	M.RESISTOR CH 1/10W 47K	1	
R745,46		ERJ6GEYJ220	M.RESISTOR CH 1/10W 22	2	
R747		ERJ6GEYJ470	M.RESISTOR CH 1/10W 47	1	
R748		ERJ6GEYJ152	M.RESISTOR CH 1/10W 1.5K	1	
R749		ERJ6GEYJ221	M.RESISTOR CH 1/10W 220	1	
R750		ERJ6GEYJ102	M.RESISTOR CH 1/10W 1K	1	
R751		ERJ6GEYJ221	M.RESISTOR CH 1/10W 220	1	
R752		ERJ6GEYJ222	M.RESISTOR CH 1/10W 2.2K	1	
R753		ERJ6GEYJ472	M.RESISTOR CH 1/10W 4.7K	1	
R754		ERJ6GEYJ103	M.RESISTOR CH 1/10W 10K	1	
R755		ERJ6GEYJ472	M.RESISTOR CH 1/10W 4.7K	1	
R756		ERJ6GEYJ682	M.RESISTOR CH 1/10W 6.8K	1	
R760,61		ERJ6GEYJ470	M.RESISTOR CH 1/10W 47	2	
R762		ERJ6GEYJ472	M.RESISTOR CH 1/10W 4.7K	1	
R763		ERJ6GEYJ152	M.RESISTOR CH 1/10W 1.5K	1	
R764-67		ERJ6GEYG621	M.RESISTOR CH 1/10W 620	4	
R768		ERJ6GEYJ152	M.RESISTOR CH 1/10W 1.5K	1	
R769		ERJ6GEYJ562	M.RESISTOR CH 1/10W 5.6K	1	
R770		ERJ6GEYG331	M.RESISTOR CH 1/10W 330	1	
R771		ERJ6GEYJ332	M.RESISTOR CH 1/10W 3.3K	1	
R772		ERJ6GEYJ470	M.RESISTOR CH 1/10W 47	1	
R773		ERJ6GEYJ102	M.RESISTOR CH 1/10W 1K	1	
R774		ERJ6GEYJ681	M.RESISTOR CH 1/10W 680	1	
R775		ERJ6GEYJ102	M.RESISTOR CH 1/10W 1K	1	
R776		ERJ6GEYJ152	M.RESISTOR CH 1/10W 1.5K	1	
R777		ERJ6GEYJ470	M.RESISTOR CH 1/10W 47	1	
R778		ERJ6GEYJ221	M.RESISTOR CH 1/10W 220	1	
R779,80		ERJ6GEYJ222	M.RESISTOR CH 1/10W 2.2K	2	
R781		ERJ6GEYG331	M.RESISTOR CH 1/10W 330	1	
R782		ERJ6GEYJ332	M.RESISTOR CH 1/10W 3.3K	1	
R783		ERJ6GEYJ470	M.RESISTOR CH 1/10W 47	1	
R784		ERJ6GEYJ102	M.RESISTOR CH 1/10W 1K	1	
R785		ERJ6GEYJ471	M.RESISTOR CH 1/10W 470	1	
R786		ERJ6GEYJ102	M.RESISTOR CH 1/10W 1K	1	
R787		ERJ6GEYJ222	M.RESISTOR CH 1/10W 2.2K	1	
R788,89		ERJ6GEYJ470	M.RESISTOR CH 1/10W 47	2	
R790~97		ERJ6GEYJ102	M.RESISTOR CH 1/10W 1K	8	
R798,99		ERJ6GEYJ332	M.RESISTOR CH 1/10W 3.3K	2	
R800		ERJ6GEYJ101	M.RESISTOR CH 1/10W 100	1	
R801,02		ERJ6GEYJ471	M.RESISTOR CH 1/10W 470	2	
R803		ERJ6GEYJ470	M.RESISTOR CH 1/10W 47	1	
R804,05		ERJ6GEYJ681	M.RESISTOR CH 1/10W 680	2	
R806,07		ERJ6GEYJ101	M.RESISTOR CH 1/10W 100	2	
R808		ERJ6GEYJ470	M.RESISTOR CH 1/10W 47	1	
R809		ERJ6GEYJ151	M.RESISTOR CH 1/10W 150	1	
R810,11		ERJ6GEYJ222	M.RESISTOR CH 1/10W 2.2K	2	
R812		ERJ6GEYJ470	M.RESISTOR CH 1/10W 47	1	
R813,14		ERJ6GEYJ222	M.RESISTOR CH 1/10W 2.2K	2	
R815,16		ERJ6GEYJ470	M.RESISTOR CH 1/10W 47	2	
R817-28		ERJ6GEYJ102	M.RESISTOR CH 1/10W 1K	12	
R829		ERJ6GEYJ683	M.RESISTOR CH 1/10W 68K	1	
R830,31		ERJ6GEYJ103	M.RESISTOR CH 1/10W 10K	2	
R832,33		ERJ6GEYJ150	M.RESISTOR CH 1/10W 15	2	
R834,35		ERJ6GEYJ332	M.RESISTOR CH 1/10W 3.3K	2	
R836		ERJ6GEYJ101	M.RESISTOR CH 1/10W 100	1	
R837		ERDS2TJ222	C.RESISTOR 1/4W 2.2K	1	
R838-40		ERJ6GEYJ102	M.RESISTOR CH 1/10W 1K	3	
R841		ERJ6GEYJ471	M.RESISTOR CH 1/10W 470	1	
R842		ERJ6GEYJ222	M.RESISTOR CH 1/10W 2.2K	1	
R843,44		ERJ6GEYJ471	M.RESISTOR CH 1/10W 470	2	
R845		ERJ6GEYJ470	M.RESISTOR CH 1/10W 47	1	
R846,47		ERJ6GEYJ333	M.RESISTOR CH 1/10W 33K	2	
R848,49		ERJ6GEYJ102	M.RESISTOR CH 1/10W 1K	2	
R850		ERJ6GEYJ222	M.RESISTOR CH 1/10W 2.2K	1	
R851		ERJ6GEYJ221	M.RESISTOR CH 1/10W 220	1	
R852		ERJ6GEYJ392	M.RESISTOR CH 1/10W 3.9K	1	
R853		ERJ6GEYJ470	M.RESISTOR CH 1/10W 47	1	
R854		ERJ6GEYJ151	M.RESISTOR CH 1/10W 150	1	
R855		ERJ6GEYJ152	M.RESISTOR CH 1/10W 1.5K	1	
R856,57		ERJ6GEYJ101	M.RESISTOR CH 1/10W 100	2	
R858		ERJ6GEYJ222	M.RESISTOR CH 1/10W 2.2K	1	
R859		ERJ6GEYJ102	M.RESISTOR CH 1/10W 1K	1	
R860		ERJ6GEYJ101	M.RESISTOR CH 1/10W 100	1	
R861		ERJ6GEYJ332	M.RESISTOR CH 1/10W 3.3K	1	

Refer to the P.C.BOARDS LIST, page 6-1-1, before using this page.

Ref.No.		Part No.	Part Name & Description	Pcs	Remarks
R862		ERJ6GEYJ223	M.RESISTOR CH 1/10W 22K	1	
R863		ERJ6GEYJ332	M.RESISTOR CH 1/10W 3.3K	1	
R864		ERJ6GEYJ472	M.RESISTOR CH 1/10W 4.7K	1	
R865		ERJ6GEYJ103	M.RESISTOR CH 1/10W 10K	1	
R866		ERJ6GEYJ683	M.RESISTOR CH 1/10W 68K	1	
R867		ERJ6GEYJ473	M.RESISTOR CH 1/10W 47K	1	
R869		ERJ6GEYJ471	M.RESISTOR CH 1/10W 470	1	
R871		ERJ6GEYJ221	M.RESISTOR CH 1/10W 220	1	
R872		ERJ6GEYJ392	M.RESISTOR CH 1/10W 3.9K	1	
R873		VRE0034E27B	M.RESISTOR CH 1/10W 1.87K	1	
R874		VRE0034E751	M.RESISTOR CH 1/10W 750	1	
R875		ERJ6GEYJ332	M.RESISTOR CH 1/10W 3.3K	1	
R876		ERJ6GEYJ152	M.RESISTOR CH 1/10W 1.5K	1	
R877		ERJ6GEYJ102	M.RESISTOR CH 1/10W 1K	1	
R878		ERJ6GEYG301	M.RESISTOR CH 1/10W 300	1	
R879		ERJ6GEYG471	M.RESISTOR CH 1/10W 470	1	
R880		ERJ6GEYJ332	M.RESISTOR CH 1/10W 3.3K	1	
R881		ERJ6GEYJ101	M.RESISTOR CH 1/10W 100	1	
R882		ERJ6GEYJ151	M.RESISTOR CH 1/10W 150	1	
R883		VRE0034E26A	M.RESISTOR CH 1/10W 182	1	
R884		ERJ6GEYJ331	M.RESISTOR CH 1/10W 330	1	
R885		VRE0034E89A	M.RESISTOR CH 1/10W 825	1	
R886,87		ERJ6GEYJ470	M.RESISTOR CH 1/10W 47	2	
R888		VRE0034E21B	M.RESISTOR CH 1/10W 1.62K	1	
R889		ERJ6GEYJ681	M.RESISTOR CH 1/10W 680	1	
R890		ERJ6GEYJ273	M.RESISTOR CH 1/10W 27K	1	
R891		ERJ6GEYJ183	M.RESISTOR CH 1/10W 18K	1	
R892		ERJ6GEYJ221	M.RESISTOR CH 1/10W 220	1	
R893		ERJ6GEYJ273	M.RESISTOR CH 1/10W 27K	1	
R894		ERJ6GEYJ183	M.RESISTOR CH 1/10W 18K	1	
R895		ERJ6GEYJ221	M.RESISTOR CH 1/10W 220	1	
R896		ERJ6GEYG243	M.RESISTOR CH 1/10W 24K	1	
R908		ERJ6GEYJ470	M.RESISTOR CH 1/10W 47	1	
R909		ERJ6GEYJ472	M.RESISTOR CH 1/10W 4.7K	1	
R910		ERJ6GEYJ473	M.RESISTOR CH 1/10W 47K	1	
R911		ERJ6GEYJ332	M.RESISTOR CH 1/10W 3.3K	1	
R912		ERJ6GEYJ471	M.RESISTOR CH 1/10W 470	1	
R913		ERJ6GEYJ102	M.RESISTOR CH 1/10W 1K	1	
R914		ERJ6GEYJ472	M.RESISTOR CH 1/10W 4.7K	1	
R915		ERJ6GEYJ122	M.RESISTOR CH 1/10W 1.2K	1	
R916		ERDS2TJ152	C.RESISTOR 1/4W 1.5K	1	
R917		ERJ6GEYJ470	M.RESISTOR CH 1/10W 47	1	
R964		ERJ6GEYJ101	M.RESISTOR CH 1/10W 100	1	
R965		ERJ6GEYJ102	M.RESISTOR CH 1/10W 1K	1	
R966-68		ERJ6GEYJ103	M.RESISTOR CH 1/10W 10K	3	
R969,70		ERJ6GEYJ472	M.RESISTOR CH 1/10W 4.7K	2	
R971		ERJ6GEYJ223	M.RESISTOR CH 1/10W 22K	1	
R972		ERJ6GEYJ331	M.RESISTOR CH 1/10W 330	1	
R974		ERJ6GEY0R00	M.RESISTOR CH 1/10W 0	1	
R986		ERDS2TJ331	C.RESISTOR 1/4W 330	1	
SW301,02		VJP1990	CONNECTOR	2	
SW304		VSS0126	SWITCH	1	
SW701,02		VJP1990	CONNECTOR	2	
SW704		VSS0126	SWITCH	1	
SW301S		VJS1990	CONNECTOR	1	
SW302S		VJS1990	CONNECTOR	1	
SW701S		VJS1990	CONNECTOR	1	
SW702S		VJS1990	CONNECTOR	1	
TP301,02		VJR0582	PACK PIN	2	
TP307-11		VJR0582	PACK PIN	5	
TP315,16		VJR0582	PACK PIN	2	
TP701-08		VJR0582	PACK PIN	8	
TPG301-03		VJR0582	PACK PIN	3	
TPG701-03		VJR0582	PACK PIN	3	
VC301		ECV1ZW10X53T	V.CAPACITOR 10P	1	
VC701		ECV1ZW20X53T	V.CAPACITOR 20P	1	

Ref.No.		Part No.	Part Name & Description	Pcs	Remarks
VL301		EIR7QF016B	COIL	1	
VL701		EIR7QF016B	COIL	1	
VL702		EIR7QF015B	COIL	1	
VR301		VRV0109B501	V.RESISTOR 500	1	
VR302		VRV0109B102	V.RESISTOR 1K	1	
VR303		VRV0109B501	V.RESISTOR 500	1	
VR304		VRV0109B102	V.RESISTOR 1K	1	
VR309		VRV0109B101	V.RESISTOR 100	1	
VR310		VRV0109B502	V.RESISTOR 5K	1	
VR311		VRV0109B501	V.RESISTOR 500	1	
VR312		VRV0064B104	V.RESISTOR 500K	1	
VR315,16		VRV0064B502	V.RESISTOR 5K	2	
VR317		VRV0109B501	V.RESISTOR 500	1	
VR318		VRV0109B203	V.RESISTOR 20K	1	
VR319,20		VRV0109B102	V.RESISTOR 1K	2	
VR321		VRV0109B203	V.RESISTOR 20K	1	
VR322		VRV0109B102	V.RESISTOR 1K	1	
VR323		VRV0109B203	V.RESISTOR 20K	1	
VR324		VRV0109B102	V.RESISTOR 1K	1	
VR701,02		VRV0109B501	V.RESISTOR 500	2	
VR709		VRV0109B501	V.RESISTOR 500	1	
VR712,13		VRV0064B502	V.RESISTOR 5K	2	
VR714		VRV0109B501	V.RESISTOR 500	1	
VR715		VRV0109B203	V.RESISTOR 20K	1	
VR716,17		VRV0109B102	V.RESISTOR 1K	2	
VR718		VRV0109B203	V.RESISTOR 20K	1	
VR719		VRV0109B102	V.RESISTOR 1K	1	
VR720		VRV0109B203	V.RESISTOR 20K	1	
VR721		VRV0109B102	V.RESISTOR 1K	1	
			MISCELLANEOUS		
		VML2143	CARD PULLER	1	
		VML2144	CARD PULLER	1	
		VMS4174	PIN	6	
		VMZ1547	BARRIER	1	
		VSC3056	SHIELD CASE	1	
		VXA3966	P.C.B. SHIELD PLATE	1	
		XNG26E	NUT	4	
		XYNV3+K6FR	SCREW	6	
		XYN26+C12	SCREW	4	

Refer to the P.C.BOARDS LIST, page 6-1-1, before using this page.

Ref.No.		Part No.	Part Name & Description	Pcs	Remarks
	■	VEP83098D	P.C.BOARD W/COMPONENT		FOR AU-63-P
			W3 MOD & DEMOD		
			CAPACITORS		
C62		ECEA1CU470	E.CAPACITOR 16V 47U	1	
C63		ECEA1CU101	E.CAPACITOR 16V 100U	1	
C64		ECUM1E104ZFN	C.CAPACITOR CH 25V 0.1U	1	
C65		ECEA1CU101	E.CAPACITOR 16V 100U	1	
C66		ECUM1E104ZFN	C.CAPACITOR CH 25V 0.1U	1	
C67,68		ECEA1CU101	E.CAPACITOR 16V 100U	2	
C69,70		ECEA1AU101	E.CAPACITOR 10V 100U	2	
C71		ECEA1CU470	E.CAPACITOR 16V 47U	1	
C72		ECEA1CU101	E.CAPACITOR 16V 100U	1	
C302		ECUM1H103KBN	C.CAPACITOR CH 50V 0.01U	1	
C303		ECUM1H220JCN	C.CAPACITOR CH 50V 22P	1	
C304		ECUM1H103KBN	C.CAPACITOR CH 50V 0.01U	1	
C306		ECUM1H220JCN	C.CAPACITOR CH 50V 22P	1	
C307		ECEA1AU101	E.CAPACITOR 10V 100U	1	
C308,09		ECUM1H103KBN	C.CAPACITOR CH 50V 0.01U	2	
C310		ECEA1AU101	E.CAPACITOR 10V 100U	1	
C311		ECUM1H103KBN	C.CAPACITOR CH 50V 0.01U	1	
C316		ECUM1E104ZFN	C.CAPACITOR CH 25V 0.1U	1	
C322		ECUM1E104ZFN	C.CAPACITOR CH 25V 0.1U	1	
C325		ECUM1E104ZFN	C.CAPACITOR CH 25V 0.1U	1	
C342		ECUM1H103KBN	C.CAPACITOR CH 50V 0.01U	1	
C343		ECUM1H120JCN	C.CAPACITOR CH 50V 12P	1	
C344		ECUM1H121JCN	C.CAPACITOR CH 50V 120P	1	
C345		ECUM1H100DCN	C.CAPACITOR CH 50V 10P	1	
C346		ECUM1H103KBN	C.CAPACITOR CH 50V 0.01U	1	
C347,48		ECEA1AU101	E.CAPACITOR 10V 100U	2	
C349		ECUM1H103KBN	C.CAPACITOR CH 50V 0.01U	1	
C350		ECUM1H181JCN	C.CAPACITOR CH 50V 180P	1	
C351		ECUM1H221JCN	C.CAPACITOR CH 50V 220P	1	
C352		ECUM1H103KBN	C.CAPACITOR CH 50V 0.01U	1	
C353		ECUM1H101JCN	C.CAPACITOR CH 50V 100P	1	
C354,55		ECUM1H103KBN	C.CAPACITOR CH 50V 0.01U	2	
C356		ECUM1E104ZFN	C.CAPACITOR CH 25V 0.1U	1	
C357		ECEA1HU2R2	E.CAPACITOR 50V 2.2U	1	
C358		ECEA1AU101	E.CAPACITOR 10V 100U	1	
C359		ECUM1H103KBN	C.CAPACITOR CH 50V 0.01U	1	
C360		ECUM1H330JCN	C.CAPACITOR CH 50V 33P	1	
C363		ECUM1E104ZFN	C.CAPACITOR CH 25V 0.1U	1	
C373		ECEA1AU101	E.CAPACITOR 10V 100U	1	
C374		ECUM1H103KBN	C.CAPACITOR CH 50V 0.01U	1	
C375		ECEA1AU101	E.CAPACITOR 10V 100U	1	
C376		ECUM1H103KBN	C.CAPACITOR CH 50V 0.01U	1	
C380		ECUM1E104ZFN	C.CAPACITOR CH 25V 0.1U	1	
C381		ECUM1H103KBN	C.CAPACITOR CH 50V 0.01U	1	
C382		ECUM1E104ZFN	C.CAPACITOR CH 25V 0.1U	1	
C383		ECEA1AU101	E.CAPACITOR 10V 100U	1	
C384		ECUM1H103KBN	C.CAPACITOR CH 50V 0.01U	1	
C386		ECUM1H050DCN	C.CAPACITOR CH 50V 50P	1	
C387		ECUM1H560JCN	C.CAPACITOR CH 50V 56P	1	
C388		ECUM1H121JCN	C.CAPACITOR CH 50V 120P	1	
C389		ECUM1H103KBN	C.CAPACITOR CH 50V 0.01U	1	
C390		ECUM1H101JCN	C.CAPACITOR CH 50V 100P	1	
C391		ECUM1H100DCN	C.CAPACITOR CH 50V 10P	1	
C392		ECUM1H103KBN	C.CAPACITOR CH 50V 0.01U	1	
C393		ECEA1AU101	E.CAPACITOR 10V 100U	1	
C394		ECUM1H103KBN	C.CAPACITOR CH 50V 0.01U	1	
C395		ECUM1E104ZFN	C.CAPACITOR CH 25V 0.1U	1	
C396,97		ECUM1H103KBN	C.CAPACITOR CH 50V 0.01U	2	
C398		ECUM1H150JCN	C.CAPACITOR CH 50V 15P	1	
C399		ECUM1H103KBN	C.CAPACITOR CH 50V 0.01U	1	
C400		ECUM1E104ZFN	C.CAPACITOR CH 25V 0.1U	1	
C401-03		ECUM1H103KBN	C.CAPACITOR CH 50V 0.01U	3	
C404		ECEA1AU101	E.CAPACITOR 10V 100U	1	
C405-07		ECUM1E104ZFN	C.CAPACITOR CH 25V 0.1U	3	

Ref.No.		Part No.	Part Name & Description	Pcs	Remarks
C408,09		ECUM1H330JCN	C.CAPACITOR CH 50V 33P	2	
C410		ECEA1AU471	E.CAPACITOR 10V 470U	1	
C411		ECUM1E104ZFN	C.CAPACITOR CH 25V 0.1U	1	
C412		ECUM1H221JCN	C.CAPACITOR CH 50V 220P	1	
C413		ECEA1AU101	E.CAPACITOR 10V 100U	1	
C414		ECUM1H470JCN	P.CAPACITOR 50V 47P	1	
C415		ECUM1H180JCN	C.CAPACITOR CH 50V 18P	1	
C416		ECUM1H181JCN	C.CAPACITOR CH 50V 180P	1	
C417,18		ECUM1E104ZFN	C.CAPACITOR CH 25V 0.1U	2	
C419		ECUM1H331JCN	C.CAPACITOR CH 50V 330P	1	
C420		ECUM1H220JCN	C.CAPACITOR CH 50V 22P	1	
C421		ECUM1H680JCN	C.CAPACITOR CH 50V 68P	1	
C422		ECUM1H330JCN	C.CAPACITOR CH 50V 33P	1	
C423		ECEA1AU101	E.CAPACITOR 10V 100U	1	
C424		ECEA1CU100	E.CAPACITOR 16V 10U	1	
C425		ECUM1H221JCN	C.CAPACITOR CH 50V 220P	1	
C426		VCM0044	M.CAPACITOR 130P	1	
C427		VCM0023	M.CAPACITOR 379P	1	
C428		ECUM1H680JCN	C.CAPACITOR CH 50V 68P	1	
C432		ECEA1AU221	E.CAPACITOR 10V 220U	1	
C433		ECUM1H050DCN	C.CAPACITOR CH 50V 50P	1	
C434		ECUM1H220JCN	C.CAPACITOR CH 50V 22P	1	
C435		ECUM1H020CCN	C.CAPACITOR CH 50V 2P	1	
C436,37		ECUM1E104ZFN	C.CAPACITOR CH 25V 0.1U	2	
C438		VCM0023	M.CAPACITOR 379P	1	
C439		VCM0057	M.CAPACITOR 169P	1	
C440		ECUM1H100DCN	C.CAPACITOR CH 50V 10P	1	
C442,43		ECEA1CU221	E.CAPACITOR 16V 220U	2	
C444,45		ECUM1H103KBN	C.CAPACITOR CH 50V 0.01U	2	
C450		ECEA1AU101	E.CAPACITOR 10V 100U	1	
C453		ECUM1E104ZFN	C.CAPACITOR CH 25V 0.1U	1	
C467		ECUM1E104ZFN	C.CAPACITOR CH 25V 0.1U	1	
C468		ECUM1H103KBN	C.CAPACITOR CH 50V 0.01U	1	
C469		ECUM1H220JCN	C.CAPACITOR CH 50V 22P	1	
C701,02		ECUM1H103KBN	C.CAPACITOR CH 50V 0.01U	2	
C703		ECEA1AU101	E.CAPACITOR 10V 100U	1	
C704,05		ECUM1H103KBN	C.CAPACITOR CH 50V 0.01U	2	
C714		ECUM1H103KBN	C.CAPACITOR CH 50V 0.01U	1	
C725		ECCF1H180JC	C.CAPACITOR 50V 18P	1	
C726		ECUM1H103KBN	C.CAPACITOR CH 50V 0.01U	1	
C727		ECUM1E104ZFN	C.CAPACITOR CH 25V 0.1U	1	
C728		ECUM1H220JCN	C.CAPACITOR CH 50V 22P	1	
C729		ECUM1H121JCN	C.CAPACITOR CH 50V 120P	1	
C730,31		ECUM1H103KBN	C.CAPACITOR CH 50V 0.01U	2	
C732		ECUM1H101JCN	C.CAPACITOR CH 50V 100P	1	
C733		ECEA1AU101	E.CAPACITOR 10V 100U	1	
C734		ECUM1H331JCN	C.CAPACITOR CH 50V 330P	1	
C735		ECEA1AU101	E.CAPACITOR 10V 100U	1	
C736		ECUM1H103KBN	C.CAPACITOR CH 50V 0.01U	1	
C737		ECUM1H121JCN	C.CAPACITOR CH 50V 120P	1	
C738		ECUM1H103KBN	C.CAPACITOR CH 50V 0.01U	1	
C744		ECUM1E104ZFN	C.CAPACITOR CH 25V 0.1U	1	
C745		ECUM1H103KBN	C.CAPACITOR CH 50V 0.01U	1	
C746		ECUM1E104ZFN	C.CAPACITOR CH 25V 0.1U	1	
C747		ECEA1AU101	E.CAPACITOR 10V 100U	1	
C749		ECUM1H561JCN	C.CAPACITOR CH 50V 560P	1	
C750		ECUM1H331JCN	C.CAPACITOR CH 50V 330P	1	
C751		ECUM1H221JCN	C.CAPACITOR CH 50V 220P	1	
C752		ECUM1H561JCN	C.CAPACITOR CH 50V 560P	1	
C753		ECUM1H390JCN	C.CAPACITOR CH 50V 39P	1	
C754		ECUM1H181JCN	C.CAPACITOR CH 50V 180P	1	
C755		ECUM1H330JCN	C.CAPACITOR CH 50V 33P	1	
C756		ECUM1H101JCN	C.CAPACITOR CH 50V 100P	1	
C757		ECUM1H330JCN	C.CAPACITOR CH 50V 33P	1	
C758		ECUM1H050DCN	C.CAPACITOR CH 50V 50P	1	
C759		ECUM1E104ZFN	C.CAPACITOR CH 25V 0.1U	1	
C760		ECUM1H680JCN	C.CAPACITOR CH 50V 68P	1	
C761		ECUM1H121JCN	C.CAPACITOR CH 50V 120P	1	
C762		ECUM1H103KBN	C.CAPACITOR CH 50V 0.01U	1	
C763		ECUM1H121JCN	C.CAPACITOR CH 50V 120P	1	
C764		ECUM1H100DCN	C.CAPACITOR CH 50V 10P	1	
C765,66		ECUM1H103KBN	C.CAPACITOR CH 50V 0.01U	2	
C767		ECEA1AU101	E.CAPACITOR 10V 100U	1	
C768,69		ECUM1H103KBN	C.CAPACITOR CH 50V 0.01U	2	
C770		ECUM1H150JCN	C.CAPACITOR CH 50V 15P	1	

Refer to the P.C.BOARDS LIST, page 6-1-1, before using this page.

Ref.No.		Part No.	Part Name & Description	Pcs	Remarks
C771		ECUM1H681JCN	C.CAPACITOR CH 50V 680P	1	
C772		ECUM1E104ZFN	C.CAPACITOR CH 25V 0.1U	1	
C773-75		ECUM1H103KBN	C.CAPACITOR CH 50V 0.01U	3	
C776		ECUM1E104ZFN	C.CAPACITOR CH 25V 0.1U	1	
C777		ECEA1AU101	E.CAPACITOR 10V 100U	1	
C778,79		ECUM1E104ZFN	C.CAPACITOR CH 25V 0.1U	2	
C780,81		ECUM1H470JCN	P.CAPACITOR 50V 47P	2	
C782		ECEA1AU471	E.CAPACITOR 10V 470U	1	
C783		ECUM1E104ZFN	C.CAPACITOR CH 25V 0.1U	1	
C784		ECUM1H221JCN	C.CAPACITOR CH 50V 220P	1	
C785		ECEA1AU101	E.CAPACITOR 10V 100U	1	
C786		ECUM1H121JCN	C.CAPACITOR CH 50V 120P	1	
C787		ECUM1H100DCN	C.CAPACITOR CH 50V 10P	1	
C788		ECUM1H331JCN	C.CAPACITOR CH 50V 330P	1	
C789,90		ECUM1E104ZFN	C.CAPACITOR CH 25V 0.1U	2	
C791		ECUM1H331JCN	C.CAPACITOR CH 50V 330P	1	
C792		ECUM1H220JCN	C.CAPACITOR CH 50V 22P	1	
C793		ECUM1H680JCN	C.CAPACITOR CH 50V 68P	1	
C794		ECUM1H330JCN	C.CAPACITOR CH 50V 33P	1	
C796		ECEA1CU100	E.CAPACITOR 16V 10U	1	
C797		VCM0046	M.CAPACITOR 229P	1	
C798		ECUM1H100DCN	C.CAPACITOR CH 50V 10P	1	
C799		ECEA1AU221	E.CAPACITOR 10V 220U	1	
C800		ECUM1H050DCN	C.CAPACITOR CH 50V 50P	1	
C801		ECUM1H020CCN	C.CAPACITOR CH 50V 2P	1	
C802		ECUM1H121JCN	C.CAPACITOR CH 50V 120P	1	
C803,04		ECUM1E104ZFN	C.CAPACITOR CH 25V 0.1U	2	
C805		ECUM1H100DCN	C.CAPACITOR CH 50V 10P	1	
C806		VCM0057	M.CAPACITOR 169P	1	
C807		VCM0024	M.CAPACITOR 270P	1	
C808		ECEA1CU221	E.CAPACITOR 16V 220U	1	
C810		ECEA1CU221	E.CAPACITOR 16V 220U	1	
C811,12		ECUM1H103KBN	C.CAPACITOR CH 50V 0.01U	2	
C817		ECEA1AU101	E.CAPACITOR 10V 100U	1	
C818		ECUM1H220JCN	C.CAPACITOR CH 50V 22P	1	
C821		ECUM1E104ZFN	C.CAPACITOR CH 25V 0.1U	1	
D301		MA151WK	DIODE	1	
D303-05		MA151K	DIODE	3	
D306,07		MA151WK	DIODE	2	
D308,09		MA151WA	DIODE	2	
D701		MA151WK	DIODE	1	
D702-05		MA151K	DIODE	4	
D706		MA151WK	DIODE	1	
DL301		VLD0191	DELAY	1	
DL701		VLD0191	DELAY	1	
FL302		VLF0787	FILTER	1	
FL303		VLF0819	FILTER	1	
FL701		VLF0821	FILTER	1	
IC10		AN79N09	IC	1	
IC11,12		AN79M05F	IC	2	
IC13		AN78M05F	IC	1	
IC14		AN78N05	IC	1	
IC15		AN78N09	IC	1	
IC301		AN6308S	IC	1	
IC306		NJM1496M	IC	1	
IC307		UPD4053BG	IC	1	
IC309		RC082BM	IC	1	
IC311-15		10116D	IC	5	
IC316		SN74LS123NS	IC	1	
IC317		MC74HC00AF	IC	1	
IC319		NE5539D	IC	1	
IC326		RC082BM	IC	1	
IC701		AN6308S	IC	1	

Ref.No.		Part No.	Part Name & Description	Pcs	Remarks
IC705		NJM1496M	IC	1	
IC706		UPD4053BG	IC	1	
IC708-12		10116D	IC	5	
IC716		NE5539D	IC	1	
L301		VLQEL05F101K	COIL 100UH	1	
L302,03		VLQEL05S150J	COIL 15UH	2	
L304		VLQEL05F101K	COIL 100UH	1	
L308		VLQEL05S2R7J	COIL 2.7UH	1	
L309,10		VLQEL05F101K	COIL 100UH	2	
L311		VLQEL05S220J	COIL 22UH	1	
L312		VLQEL05S3R3J	COIL 3.3UH	1	
L313		VLQEL05F101K	COIL 100UH	1	
L314		VLQEL05S100J	COIL 10UH	1	
L316-18		VLQEL05F101K	COIL 100UH	3	
L320		VLQEL05S2R2J	COIL 2.2UH	1	
L321		VLQEL05S120J	COIL 12UH	1	
L322		VLQEL05S5R6J	COIL 5.6UH	1	
L323		VLQEL05F101K	COIL 100UH	1	
L324		VLQEL05SR47M	COIL	1	#L
L325-27		VLQEL05F101K	COIL 100UH	3	
L328		VLQEL05S6R8J	COIL 6.8UH	1	
L329		VLQEL05F101K	COIL 100UH	1	
L333-35		VLQEL05F101K	COIL 100UH	3	
L701		VLQEL05F101K	COIL 100UH	1	
L709		VLQEL05S4R7J	COIL 4.7UH	1	
L710		VLQEL05F101K	COIL 100UH	1	
L711		VLQEL05S560J	COIL 56UH	1	
L712		VLQEL05F101K	COIL 100UH	1	
L713		VLQEL05S3R9J	COIL 3.9UH	1	
L715		VLQEL05F101K	COIL 100UH	1	
L716		VLQEL05S181J	COIL 180UH	1	
L717		VLQEL05S680J	COIL 68UH	1	
L718		VLQEL05S3R3J	COIL 3.3UH	1	
L719,20		VLQEL05S8R2J	COIL 8.2UH	2	
L721		VLQEL05S2R2J	COIL 2.2UH	1	
L722		VLQEL05S150J	COIL 15UH	1	
L723		VLQEL05S8R2J	COIL 8.2UH	1	
L724		VLQEL05F101K	COIL 100UH	1	
L725		VLQEL05SR47M	COIL	1	#L
L726-28		VLQEL05F101K	COIL 100UH	3	
L729		VLQEL05S150J	COIL 15UH	1	
L731-33		VLQEL05F101K	COIL 100UH	3	
Q301-04		2SC2295	TRANSISTOR CHIP	4	(B,C)
Q313,14		2SC2295	TRANSISTOR CHIP	2	(B,C)
Q315		2SA1022	TRANSISTOR CHIP	1	(B,C)
Q316		2SC2295	TRANSISTOR CHIP	1	(B,C)
Q317,18		2SA1022	TRANSISTOR CHIP	2	(B,C)
Q319		IMX4	TRANSISTOR	1	
Q320		UN2113	TRANSISTOR-RESISTOR	1	
Q321,22		2SC2295	TRANSISTOR CHIP	2	(B,C)
Q323		IMX4	TRANSISTOR	1	
Q324		2SC2295	TRANSISTOR CHIP	1	(B,C)
Q325		2SA1022	TRANSISTOR CHIP	1	(B,C)
Q326		2SC2295	TRANSISTOR CHIP	1	(B,C)
Q327,28		2SA1022	TRANSISTOR CHIP	2	(B,C)
Q329		2SC2295	TRANSISTOR CHIP	1	(B,C)
Q330		2SA1022	TRANSISTOR CHIP	1	(B,C)
Q331-38		2SC2295	TRANSISTOR CHIP	8	(B,C)
Q339,40		UN2213	TRANSISTOR-RESISTOR	2	
Q341		2SA1462	TRANSISTOR	1	
Q342,43		2SC3757	TRANSISTOR	2	(Q,R)
Q344		2SC2295	TRANSISTOR CHIP	1	(B,C)
Q345		2SA1022	TRANSISTOR CHIP	1	(B,C)
Q346		2SC2480	TRANSISTOR	1	
Q347		2SA1462	TRANSISTOR	1	
Q351		2SK374	TRANSISTOR	1	
Q352		2SC3757	TRANSISTOR	1	(Q,R)
Q353		2SA1226	TRANSISTOR	1	
Q354		2SD601	TRANSISTOR CHIP	1	(Q,R)

Refer to the P.C.BOARDS LIST, page 6-1-1, before using this page.

Ref.No.		Part No.	Part Name & Description	Pcs	Remarks
Q355		2SA1022	TRANSISTOR CHIP	1	(B,C)
Q356-61		UN2113	TRANSISTOR-RESISTOR	6	
Q376		2SA1462	TRANSISTOR	1	
Q377		2SA1226	TRANSISTOR	1	
Q378		2SB709	TRANSISTOR CHIP	1	(Q,R)
Q379		2SC2480	TRANSISTOR	1	
Q382-84		2SC3757	TRANSISTOR	3	(Q,R)
Q385		2SC2295	TRANSISTOR CHIP	1	(B,C)
Q701,02		2SA1022	TRANSISTOR CHIP	2	(B,C)
Q710,11		2SC2295	TRANSISTOR CHIP	2	(B,C)
Q712		2SA1022	TRANSISTOR CHIP	1	(B,C)
Q713		2SC2295	TRANSISTOR CHIP	1	(B,C)
Q714,15		2SA1022	TRANSISTOR CHIP	2	(B,C)
Q716		2SC2295	TRANSISTOR CHIP	1	(B,C)
Q717		2SA1022	TRANSISTOR CHIP	1	(B,C)
Q718		2SC2295	TRANSISTOR CHIP	1	(B,C)
Q719,20		2SA1022	TRANSISTOR CHIP	2	(B,C)
Q721		2SC2295	TRANSISTOR CHIP	1	(B,C)
Q722		2SA1022	TRANSISTOR CHIP	1	(B,C)
Q723-30		2SC2295	TRANSISTOR CHIP	8	(B,C)
Q731		UN2213	TRANSISTOR-RESISTOR	1	
Q732		2SA1462	TRANSISTOR	1	
Q733		2SC2295	TRANSISTOR CHIP	1	(B,C)
Q734		2SA1022	TRANSISTOR CHIP	1	(B,C)
Q735		2SC2480	TRANSISTOR	1	
Q736		2SA1462	TRANSISTOR	1	
Q740		2SK374	TRANSISTOR	1	
Q741		2SC3757	TRANSISTOR	1	(Q,R)
Q742		2SA1226	TRANSISTOR	1	
Q743		2SD601	TRANSISTOR CHIP	1	(Q,R)
Q754		2SA1462	TRANSISTOR	1	
Q755		2SA1226	TRANSISTOR	1	
Q756		2SB709	TRANSISTOR CHIP	1	(Q,R)
Q757		2SC2480	TRANSISTOR	1	
Q758-60		2SC3757	TRANSISTOR	3	(Q,R)
			RESISTORS		
R20		ERJ6GEYJ472	M.RESISTOR CH 1/10W 4.7K	1	
R91		ERJ6GEYJ472	M.RESISTOR CH 1/10W 4.7K	1	
R101		ERJ6GEYJ470	M.RESISTOR CH 1/10W 47	1	
R301		ERJ6GEYJ470	M.RESISTOR CH 1/10W 47	1	
R302		ERJ6GEYJ681	M.RESISTOR CH 1/10W 680	1	
R303		ERJ6GEYJ102	M.RESISTOR CH 1/10W 1K	1	
R304		ERJ6GEYJ332	M.RESISTOR CH 1/10W 3.3K	1	
R305		ERJ6GEYJ470	M.RESISTOR CH 1/10W 47	1	
R306		ERJ6GEYJ681	M.RESISTOR CH 1/10W 680	1	
R307		ERJ6GEYJ102	M.RESISTOR CH 1/10W 1K	1	
R308		ERJ6GEYJ332	M.RESISTOR CH 1/10W 3.3K	1	
R309		ERJ6GEYJ222	M.RESISTOR CH 1/10W 2.2K	1	
R310		ERJ6GEYJ470	M.RESISTOR CH 1/10W 47	1	
R332		ERJ6GEYJ152	M.RESISTOR CH 1/10W 1.5K	1	
R333,34		ERJ6GEYG471	M.RESISTOR CH 1/10W 470	2	
R335,36		ERJ6GEYJ470	M.RESISTOR CH 1/10W 47	2	
R337,38		ERJ6GEYJ222	M.RESISTOR CH 1/10W 2.2K	2	
R339,40		ERJ6GEYJ271	M.RESISTOR CH 1/10W 270	2	
R341		ERJ6GEYJ470	M.RESISTOR CH 1/10W 47	1	
R342		ERJ6GEYJ271	M.RESISTOR CH 1/10W 270	1	
R343		ERJ6GEYJ821	M.RESISTOR CH 1/10W 820	1	
R344		ERJ6GEYJ470	M.RESISTOR CH 1/10W 47	1	
R345		ERJ6GEYJ222	M.RESISTOR CH 1/10W 2.2K	1	
R346		ERJ6GEYJ102	M.RESISTOR CH 1/10W 1K	1	
R347		ERJ6GEYG331	M.RESISTOR CH 1/10W 330	1	
R348		ERJ6GEYJ153	M.RESISTOR CH 1/10W 15K	1	
R349		ERJ6GEYJ333	M.RESISTOR CH 1/10W 33K	1	
R350,51		ERJ6GEYJ220	M.RESISTOR CH1/10W 22	2	
R352		ERJ6GEYJ470	M.RESISTOR CH 1/10W 47	1	
R353		ERJ6GEYJ152	M.RESISTOR CH 1/10W 1.5K	1	
R354		ERJ6GEYJ221	M.RESISTOR CH 1/10W 220	1	
R355		ERJ6GEYJ102	M.RESISTOR CH 1/10W 1K	1	
R356		ERJ6GEYJ221	M.RESISTOR CH 1/10W 220	1	
R357		ERJ6GEYJ222	M.RESISTOR CH 1/10W 2.2K	1	
R358		ERJ6GEYJ101	M.RESISTOR CH 1/10W 100	1	
R359		ERJ6GEYJ472	M.RESISTOR CH 1/10W 4.7K	1	

Ref.No.		Part No.	Part Name & Description	Pcs	Remarks
R360,61		ERJ6GEYJ473	M.RESISTOR CH 1/10W 47K	2	
R362		ERJ6GEYJ472	M.RESISTOR CH 1/10W 4.7K	1	
R363		ERJ6GEYJ223	M.RESISTOR CH 1/10W 22K	1	
R364		ERJ6GEYJ273	M.RESISTOR CH1/10W 27K	1	
R365		ERJ6GEYJ473	M.RESISTOR CH 1/10W 47K	1	
R366		ERJ6GEYJ223	M.RESISTOR CH 1/10W 22K	1	
R367		ERJ6GEYJ104	M.RESISTOR CH 1/10W 100K	1	
R368		ERJ6GEYJ472	M.RESISTOR CH 1/10W 4.7K	1	
R369		ERJ6GEYJ103	M.RESISTOR CH 1/10W 10K	1	
R370		ERJ6GEYJ223	M.RESISTOR CH 1/10W 22K	1	
R371		ERJ6GEYJ682	M.RESISTOR CH 1/10W 6.8K	1	
R372		ERJ6GEYJ470	M.RESISTOR CH 1/10W 47	1	
R373		ERJ6GEYJ681	M.RESISTOR CH 1/10W 680	1	
R374		ERJ6GEYJ151	M.RESISTOR CH 1/10W 150	1	
R375		ERJ6GEYJ470	M.RESISTOR CH 1/10W 47	1	
R386		ERJ6GEYJ103	M.RESISTOR CH 1/10W 10K	1	
R387,88		ERJ6GEYJ473	M.RESISTOR CH 1/10W 47K	2	
R389		ERJ6GEYJ103	M.RESISTOR CH 1/10W 10K	1	
R390		ERJ6GEYJ472	M.RESISTOR CH 1/10W 4.7K	1	
R391		ERJ6GEYJ474	M.RESISTOR CH 1/10W 470K	1	
R392		ERJ6GEYJ473	M.RESISTOR CH 1/10W 47K	1	
R393		ERJ6GEYJ471	M.RESISTOR CH 1/10W 470	1	
R397,98		ERJ6GEYJ470	M.RESISTOR CH 1/10W 47	2	
R399		ERJ6GEYJ472	M.RESISTOR CH 1/10W 4.7K	1	
R400		ERJ6GEYJ152	M.RESISTOR CH 1/10W 1.5K	1	
R401-04		ERJ6GEYG621	M.RESISTOR CH 1/10W 620	4	
R405		ERJ6GEYJ152	M.RESISTOR CH 1/10W 1.5K	1	
R406		ERJ6GEYJ562	M.RESISTOR CH 1/10W 5.6K	1	
R407		ERJ6GEYG301	M.RESISTOR CH 1/10W 300	1	
R409		ERJ6GEYJ470	M.RESISTOR CH 1/10W 47	1	
R410		ERJ6GEYJ102	M.RESISTOR CH 1/10W 1K	1	
R411		ERJ6GEYJ681	M.RESISTOR CH 1/10W 680	1	
R412		ERJ6GEYJ102	M.RESISTOR CH 1/10W 1K	1	
R413		ERJ6GEYJ152	M.RESISTOR CH 1/10W 1.5K	1	
R414		ERJ6GEYJ470	M.RESISTOR CH 1/10W 47	1	
R415		ERJ6GEYJ221	M.RESISTOR CH 1/10W 220	1	
R416,17		ERJ6GEYJ222	M.RESISTOR CH 1/10W 2.2K	2	
R418		ERJ6GEYG331	M.RESISTOR CH 1/10W 330	1	
R419		ERJ6GEYJ332	M.RESISTOR CH 1/10W 3.3K	1	
R420		ERJ6GEYJ470	M.RESISTOR CH 1/10W 47	1	
R421		ERJ6GEYJ102	M.RESISTOR CH 1/10W 1K	1	
R422		ERJ6GEYJ471	M.RESISTOR CH 1/10W 470	1	
R423		ERJ6GEYJ102	M.RESISTOR CH 1/10W 1K	1	
R424		ERJ6GEYJ222	M.RESISTOR CH 1/10W 2.2K	1	
R425,26		ERJ6GEYJ470	M.RESISTOR CH 1/10W 47	2	
R427-34		ERJ6GEYJ102	M.RESISTOR CH 1/10W 1K	8	
R435,36		ERJ6GEYJ332	M.RESISTOR CH 1/10W 3.3K	2	
R437		ERJ6GEYJ101	M.RESISTOR CH 1/10W 100	1	
R438,39		ERJ6GEYJ471	M.RESISTOR CH 1/10W 470	2	
R440		ERJ6GEYJ470	M.RESISTOR CH 1/10W 47	1	
R441,42		ERJ6GEYJ681	M.RESISTOR CH 1/10W 680	2	
R443,44		ERJ6GEYJ101	M.RESISTOR CH 1/10W 100	2	
R445		ERJ6GEYJ470	M.RESISTOR CH 1/10W 47	1	
R446		ERJ6GEYJ151	M.RESISTOR CH 1/10W 150	1	
R447,48		ERJ6GEYJ222	M.RESISTOR CH 1/10W 2.2K	2	
R449		ERJ6GEYJ470	M.RESISTOR CH 1/10W 47	1	
R450,51		ERJ6GEYJ222	M.RESISTOR CH 1/10W 2.2K	2	
R452,53		ERJ6GEYJ470	M.RESISTOR CH 1/10W 47	2	
R454-65		ERJ6GEYJ102	M.RESISTOR CH 1/10W 1K	12	
R466		ERJ6GEYJ683	M.RESISTOR CH 1/10W 68K	1	
R467,68		ERJ6GEYJ103	M.RESISTOR CH 1/10W 10K	2	
R469,70		ERJ6GEYJ150	M.RESISTOR CH 1/10W 15	2	
R471,72		ERJ6GEYJ332	M.RESISTOR CH 1/10W 3.3K	2	
R473		ERJ6GEYJ101	M.RESISTOR CH 1/10W 100	1	
R474		ERDS2TJ222	C.RESISTOR 1/4W 2.2K	1	
R475		ERJ6GEYJ102	M.RESISTOR CH 1/10W 1K	1	
R476		ERJ6GEYJ471	M.RESISTOR CH 1/10W 470	1	
R478		ERJ6GEYJ102	M.RESISTOR CH 1/10W 1K	1	
R479		ERJ6GEYJ222	M.RESISTOR CH 1/10W 2.2K	1	
R480,81		ERJ6GEYJ471	M.RESISTOR CH 1/10W 470	2	
R482		ERJ6GEYJ470	M.RESISTOR CH 1/10W 47	1	
R483,84		ERJ6GEYJ333	M.RESISTOR CH 1/10W 33K	2	
R485,86		ERJ6GEYJ102	M.RESISTOR CH 1/10W 1K	2	
R487		ERJ6GEYJ222	M.RESISTOR CH 1/10W 2.2K	1	
R488		ERJ6GEYJ221	M.RESISTOR CH 1/10W 220	1	

Refer to the P.C.BOARDS LIST, page 6-1-1, before using this page.

Ref.No.		Part No.	Part Name & Description	Pcs	Remarks
R489		ERJ6GEYJ392	M.RESISTOR CH 1/10W 3.9K	1	
R490		ERJ6GEYJ470	M.RESISTOR CH 1/10W 47	1	
R491		ERJ6GEYJ183	M.RESISTOR CH 1/10W 18K	1	
R492		ERJ6GEYJ151	M.RESISTOR CH 1/10W 150	1	
R493		ERJ6GEYJ152	M.RESISTOR CH 1/10W 1.5K	1	
R494,95		ERJ6GEYJ101	M.RESISTOR CH 1/10W 100	2	
R496		ERJ6GEYJ222	M.RESISTOR CH 1/10W 2.2K	1	
R497		ERJ6GEYJ102	M.RESISTOR CH 1/10W 1K	1	
R498		ERJ6GEYJ101	M.RESISTOR CH 1/10W 100	1	
R499		ERJ6GEYJ332	M.RESISTOR CH 1/10W 3.3K	1	
R500		ERJ6GEYJ223	M.RESISTOR CH 1/10W 22K	1	
R501		ERJ6GEYJ332	M.RESISTOR CH 1/10W 3.3K	1	
R502		ERJ6GEYJ472	M.RESISTOR CH 1/10W 4.7K	1	
R503		ERJ6GEYJ103	M.RESISTOR CH 1/10W 10K	1	
R504		ERJ6GEYJ683	M.RESISTOR CH 1/10W 68K	1	
R505,06		ERJ6GEYJ473	M.RESISTOR CH 1/10W 47K	2	
R507		ERJ6GEYJ471	M.RESISTOR CH 1/10W 470	1	
R509		ERJ6GEYJ221	M.RESISTOR CH 1/10W 220	1	
R510		ERJ6GEYJ392	M.RESISTOR CH 1/10W 3.9K	1	
R511		VRE0034E27B	M.RESISTOR CH 1/10W 1.87K	1	
R512		VRE0034E751	M.RESISTOR CH 1/10W 750	1	
R513		ERJ6GEYJ332	M.RESISTOR CH 1/10W 3.3K	1	
R514		ERJ6GEYJ152	M.RESISTOR CH 1/10W 1.5K	1	
R515		ERJ6GEYJ682	M.RESISTOR CH 1/10W 6.8K	1	
R516		ERJ6GEYG301	M.RESISTOR CH 1/10W 300	1	
R517		ERJ6GEY0R00	M.RESISTOR CH 1/10W 0	1	
R518		ERJ6GEYG471	M.RESISTOR CH 1/10W 470	1	
R519		ERJ6GEYJ332	M.RESISTOR CH 1/10W 3.3K	1	
R520		ERJ6GEYJ101	M.RESISTOR CH 1/10W 100	1	
R521		ERJ6GEYJ151	M.RESISTOR CH 1/10W 150	1	
R522		VRE0034E26A	M.RESISTOR CH 1/10W 182	1	
R523		ERJ6GEYJ102	M.RESISTOR CH 1/10W 1K	1	
R524		VRE0034E89A	M.RESISTOR CH 1/10W 825	1	
R525		VRE0034E21B	M.RESISTOR CH 1/10W 1.62K	1	
R526,27		ERJ6GEYJ470	M.RESISTOR CH 1/10W 47	2	
R528		ERJ6GEYJ101	M.RESISTOR CH 1/10W 100	1	
R529		ERJ6GEYJ102	M.RESISTOR CH 1/10W 1K	1	
R530		ERJ6GEYJ681	M.RESISTOR CH 1/10W 680	1	
R531,32		ERJ6GEYJ273	M.RESISTOR CH1/10W 27K	2	
R533,34		ERJ6GEYJ183	M.RESISTOR CH 1/10W 18K	2	
R535,36		ERJ6GEYJ221	M.RESISTOR CH 1/10W 220	2	
R537		ERJ6GEYG243	M.RESISTOR CH1/10W 24K	1	
R549		ERJ6GEYJ470	M.RESISTOR CH 1/10W 47	1	
R550		ERJ6GEYJ472	M.RESISTOR CH 1/10W 4.7K	1	
R551		ERJ6GEYJ473	M.RESISTOR CH 1/10W 47K	1	
R552		ERJ6GEYJ332	M.RESISTOR CH 1/10W 3.3K	1	
R553		ERJ6GEYJ471	M.RESISTOR CH 1/10W 470	1	
R554		ERJ6GEYJ102	M.RESISTOR CH 1/10W 1K	1	
R555		ERJ6GEYJ472	M.RESISTOR CH 1/10W 4.7K	1	
R556		ERJ6GEYJ122	M.RESISTOR CH1/10W 1.2K	1	
R557		ERDS2TJ152	C.RESISTOR 1/4W 1.5K	1	
R558		ERJ6GEYJ470	M.RESISTOR CH 1/10W 47	1	
R559		ERJ6GEYJ152	M.RESISTOR CH 1/10W 1.5K	1	
R560		ERJ6GEYJ470	M.RESISTOR CH 1/10W 47	1	
R561-63		ERJ6GEYJ473	M.RESISTOR CH 1/10W 47K	3	
R564		ERJ6GEYJ222	M.RESISTOR CH 1/10W 2.2K	1	
R565		ERJ6GEYJ223	M.RESISTOR CH 1/10W 22K	1	
R566		ERJ6GEYJ222	M.RESISTOR CH 1/10W 2.2K	1	
R567		ERJ6GEYJ223	M.RESISTOR CH 1/10W 22K	1	
R620		ERJ6GEYJ101	M.RESISTOR CH 1/10W 100	1	
R624-26		ERJ6GEYJ103	M.RESISTOR CH 1/10W 10K	3	
R627		ERJ6GEYJ472	M.RESISTOR CH 1/10W 4.7K	1	
R628		ERJ6GEYJ223	M.RESISTOR CH 1/10W 22K	1	
R629		ERJ6GEYJ472	M.RESISTOR CH 1/10W 4.7K	1	
R630,31		ERJ6GEYJ101	M.RESISTOR CH 1/10W 100	2	
R633		ERJ6GEYJ331	M.RESISTOR CH 1/10W 330	1	
R636		ERJ6GEYJ470	M.RESISTOR CH 1/10W 47	1	
R637		ERJ6GEYJ102	M.RESISTOR CH 1/10W 1K	1	
R638		ERJ6GEY0R00	M.RESISTOR CH 1/10W 0	1	
R639,40		ERDS2TJ331	C.RESISTOR 1/4W 330	2	
R643		ERDS2TJ331	C.RESISTOR 1/4W 330	1	
R701		ERJ6GEYJ470	M.RESISTOR CH 1/10W 47	1	
R702		ERJ6GEYJ102	M.RESISTOR CH 1/10W 1K	1	
R703		ERJ6GEYJ821	M.RESISTOR CH 1/10W 820	1	
R704		ERJ6GEY0R00	M.RESISTOR CH 1/10W 0	1	

Ref.No.		Part No.	Part Name & Description	Pcs	Remarks
R705		ERJ6GEYJ681	M.RESISTOR CH 1/10W 680	1	
R711,12		ERJ6GEYJ470	M.RESISTOR CH 1/10W 47	2	
R723,24		ERJ6GEYJ101	M.RESISTOR CH 1/10W 100	2	
R725		ERJ6GEYJ102	M.RESISTOR CH 1/10W 1K	1	
R726		ERJ6GEYJ470	M.RESISTOR CH 1/10W 47	1	
R727		ERJ6GEYG471	M.RESISTOR CH 1/10W 470	1	
R728,29		ERJ6GEYJ470	M.RESISTOR CH 1/10W 47	2	
R730		ERJ6GEYG471	M.RESISTOR CH 1/10W 470	1	
R731		ERJ6GEYJ222	M.RESISTOR CH 1/10W 2.2K	1	
R732,33		ERJ6GEYG391	M.RESISTOR CH 1/10W 390	2	
R734		ERJ6GEYJ222	M.RESISTOR CH 1/10W 2.2K	1	
R735		ERJ6GEYJ470	M.RESISTOR CH 1/10W 47	1	
R736		ERJ6GEYJ271	M.RESISTOR CH 1/10W 270	1	
R737		ERJ6GEYJ102	M.RESISTOR CH 1/10W 1K	1	
R738		ERJ6GEYJ821	M.RESISTOR CH 1/10W 820	1	
R739		ERJ6GEYJ470	M.RESISTOR CH 1/10W 47	1	
R740		ERJ6GEYJ222	M.RESISTOR CH 1/10W 2.2K	1	
R741		ERJ6GEYJ102	M.RESISTOR CH 1/10W 1K	1	
R742		ERJ6GEYG331	M.RESISTOR CH 1/10W 330	1	
R743		ERJ6GEYJ153	M.RESISTOR CH 1/10W 15K	1	
R744		ERJ6GEYJ473	M.RESISTOR CH 1/10W 47K	1	
R745,46		ERJ6GEYJ220	M.RESISTOR CH1/10W 22	2	
R747		ERJ6GEYJ470	M.RESISTOR CH 1/10W 47	1	
R748		ERJ6GEYJ152	M.RESISTOR CH 1/10W 1.5K	1	
R749		ERJ6GEYJ221	M.RESISTOR CH 1/10W 220	1	
R750		ERJ6GEYJ102	M.RESISTOR CH 1/10W 1K	1	
R751		ERJ6GEYJ221	M.RESISTOR CH 1/10W 220	1	
R752		ERJ6GEYJ222	M.RESISTOR CH 1/10W 2.2K	1	
R753		ERJ6GEYJ472	M.RESISTOR CH 1/10W 4.7K	1	
R754		ERJ6GEYJ103	M.RESISTOR CH 1/10W 10K	1	
R755		ERJ6GEYJ472	M.RESISTOR CH 1/10W 4.7K	1	
R756		ERJ6GEYJ682	M.RESISTOR CH 1/10W 6.8K	1	
R760,61		ERJ6GEYJ470	M.RESISTOR CH 1/10W 47	2	
R762		ERJ6GEYJ472	M.RESISTOR CH 1/10W 4.7K	1	
R763		ERJ6GEYJ152	M.RESISTOR CH 1/10W 1.5K	1	
R764-67		ERJ6GEYG621	M.RESISTOR CH 1/10W 620	4	
R768		ERJ6GEYJ152	M.RESISTOR CH 1/10W 1.5K	1	
R769		ERJ6GEYJ562	M.RESISTOR CH 1/10W 5.6K	1	
R770		ERJ6GEYG331	M.RESISTOR CH 1/10W 330	1	
R771		ERJ6GEYJ332	M.RESISTOR CH 1/10W 3.3K	1	
R772		ERJ6GEYJ470	M.RESISTOR CH 1/10W 47	1	
R773		ERJ6GEYJ102	M.RESISTOR CH 1/10W 1K	1	
R774		ERJ6GEYJ681	M.RESISTOR CH 1/10W 680	1	
R775		ERJ6GEYJ102	M.RESISTOR CH 1/10W 1K	1	
R776		ERJ6GEYJ152	M.RESISTOR CH 1/10W 1.5K	1	
R777		ERJ6GEYJ470	M.RESISTOR CH 1/10W 47	1	
R778		ERJ6GEYJ221	M.RESISTOR CH 1/10W 220	1	
R779,80		ERJ6GEYJ222	M.RESISTOR CH 1/10W 2.2K	2	
R781		ERJ6GEYG331	M.RESISTOR CH 1/10W 330	1	
R782		ERJ6GEYJ332	M.RESISTOR CH 1/10W 3.3K	1	
R783		ERJ6GEYJ470	M.RESISTOR CH 1/10W 47	1	
R784		ERJ6GEYJ102	M.RESISTOR CH 1/10W 1K	1	
R785		ERJ6GEYJ471	M.RESISTOR CH 1/10W 470	1	
R786		ERJ6GEYJ102	M.RESISTOR CH 1/10W 1K	1	
R787		ERJ6GEYJ222	M.RESISTOR CH 1/10W 2.2K	1	
R788,89		ERJ6GEYJ470	M.RESISTOR CH 1/10W 47	2	
R790-97		ERJ6GEYJ102	M.RESISTOR CH 1/10W 1K	8	
R798,99		ERJ6GEYJ332	M.RESISTOR CH 1/10W 3.3K	2	
R800		ERJ6GEYJ101	M.RESISTOR CH 1/10W 100	1	
R801,02		ERJ6GEYJ471	M.RESISTOR CH 1/10W 470	2	
R803		ERJ6GEYJ470	M.RESISTOR CH 1/10W 47	1	
R804,05		ERJ6GEYJ681	M.RESISTOR CH 1/10W 680	2	
R806,07		ERJ6GEYJ101	M.RESISTOR CH 1/10W 100	2	
R808		ERJ6GEYJ470	M.RESISTOR CH 1/10W 47	1	
R809		ERJ6GEYJ151	M.RESISTOR CH 1/10W 150	1	
R810,11		ERJ6GEYJ222	M.RESISTOR CH 1/10W 2.2K	2	
R812		ERJ6GEYJ470	M.RESISTOR CH 1/10W 47	1	
R813,14		ERJ6GEYJ222	M.RESISTOR CH 1/10W 2.2K	2	
R815,16		ERJ6GEYJ470	M.RESISTOR CH 1/10W 47	2	
R817-28		ERJ6GEYJ102	M.RESISTOR CH 1/10W 1K	12	
R829		ERJ6GEYJ683	M.RESISTOR CH 1/10W 68K	1	
R830,31		ERJ6GEYJ103	M.RESISTOR CH 1/10W 10K	2	
R832,33		ERJ6GEYJ150	M.RESISTOR CH 1/10W 15	2	
R834,35		ERJ6GEYJ332	M.RESISTOR CH 1/10W 3.3K	2	
R836		ERJ6GEYJ101	M.RESISTOR CH 1/10W 100	1	

Refer to the P.C.BOARDS LIST, page 6-1-1, before using this page.

Ref.No.		Part No.	Part Name & Description	Pcs	Remarks
R837		ERDS2TJ222	C.RESISTOR 1/4W 2.2K	1	
R838-40		ERJ6GEYJ102	M.RESISTOR CH 1/10W 1K	3	
R841		ERJ6GEYJ471	M.RESISTOR CH 1/10W 470	1	
R842		ERJ6GEYJ222	M.RESISTOR CH 1/10W 2.2K	1	
R843,44		ERJ6GEYJ471	M.RESISTOR CH 1/10W 470	2	
R845		ERJ6GEYJ470	M.RESISTOR CH 1/10W 47	1	
R846,47		ERJ6GEYJ333	M.RESISTOR CH 1/10W 33K	2	
R848,49		ERJ6GEYJ102	M.RESISTOR CH 1/10W 1K	2	
R850		ERJ6GEYJ222	M.RESISTOR CH 1/10W 2.2K	1	
R851		ERJ6GEYJ221	M.RESISTOR CH 1/10W 220	1	
R852		ERJ6GEYJ392	M.RESISTOR CH 1/10W 3.9K	1	
R853		ERJ6GEYJ470	M.RESISTOR CH 1/10W 47	1	
R854		ERJ6GEYJ151	M.RESISTOR CH 1/10W 150	1	
R855		ERJ6GEYJ152	M.RESISTOR CH 1/10W 1.5K	1	
R856,57		ERJ6GEYJ101	M.RESISTOR CH 1/10W 100	2	
R858		ERJ6GEYJ222	M.RESISTOR CH 1/10W 2.2K	1	
R859		ERJ6GEYJ102	M.RESISTOR CH 1/10W 1K	1	
R860		ERJ6GEYJ101	M.RESISTOR CH 1/10W 100	1	
R861		ERJ6GEYJ332	M.RESISTOR CH 1/10W 3.3K	1	
R862		ERJ6GEYJ223	M.RESISTOR CH 1/10W 22K	1	
R863		ERJ6GEYJ332	M.RESISTOR CH 1/10W 3.3K	1	
R864		ERJ6GEYJ472	M.RESISTOR CH 1/10W 4.7K	1	
R865		ERJ6GEYJ103	M.RESISTOR CH 1/10W 10K	1	
R866		ERJ6GEYJ683	M.RESISTOR CH 1/10W 68K	1	
R867		ERJ6GEYJ473	M.RESISTOR CH 1/10W 47K	1	
R869		ERJ6GEYJ471	M.RESISTOR CH 1/10W 470	1	
R871		ERJ6GEYJ221	M.RESISTOR CH 1/10W 220	1	
R872		ERJ6GEYJ392	M.RESISTOR CH 1/10W 3.9K	1	
R873		VRE0034E27B	M.RESISTOR CH 1/10W 1.87K	1	
R874		VRE0034E751	M.RESISTOR CH 1/10W 750	1	
R875		ERJ6GEYJ332	M.RESISTOR CH 1/10W 3.3K	1	
R876		ERJ6GEYJ152	M.RESISTOR CH 1/10W 1.5K	1	
R877		ERJ6GEYJ102	M.RESISTOR CH 1/10W 1K	1	
R878		ERJ6GEYG301	M.RESISTOR CH 1/10W 300	1	
R879		ERJ6GEYG471	M.RESISTOR CH 1/10W 470	1	
R880		ERJ6GEYJ332	M.RESISTOR CH 1/10W 3.3K	1	
R881		ERJ6GEYJ101	M.RESISTOR CH 1/10W 100	1	
R882		ERJ6GEYJ151	M.RESISTOR CH 1/10W 150	1	
R883		VRE0034E26A	M.RESISTOR CH 1/10W 182	1	
R884		ERJ6GEYJ331	M.RESISTOR CH 1/10W 330	1	
R885		VRE0034E89A	M.RESISTOR CH 1/10W 825	1	
R886,87		ERJ6GEYJ470	M.RESISTOR CH 1/10W 47	2	
R888		VRE0034E21B	M.RESISTOR CH 1/10W 1.62K	1	
R889		ERJ6GEYJ681	M.RESISTOR CH 1/10W 680	1	
R890		ERJ6GEYJ273	M.RESISTOR CH1/10W 27K	1	
R891		ERJ6GEYJ183	M.RESISTOR CH 1/10W 18K	1	
R892		ERJ6GEYJ221	M.RESISTOR CH 1/10W 220	1	
R893		ERJ6GEYJ273	M.RESISTOR CH1/10W 27K	1	
R894		ERJ6GEYJ183	M.RESISTOR CH 1/10W 18K	1	
R895		ERJ6GEYJ221	M.RESISTOR CH 1/10W 220	1	
R896		ERJ6GEYG243	M.RESISTOR CH1/10W 24K	1	
R908		ERJ6GEYJ470	M.RESISTOR CH 1/10W 47	1	
R909		ERJ6GEYJ472	M.RESISTOR CH 1/10W 4.7K	1	
R910		ERJ6GEYJ473	M.RESISTOR CH 1/10W 47K	1	
R911		ERJ6GEYJ332	M.RESISTOR CH 1/10W 3.3K	1	
R912		ERJ6GEYJ471	M.RESISTOR CH 1/10W 470	1	
R913		ERJ6GEYJ102	M.RESISTOR CH 1/10W 1K	1	
R914		ERJ6GEYJ472	M.RESISTOR CH 1/10W 4.7K	1	
R915		ERJ6GEYJ122	M.RESISTOR CH1/10W 1.2K	1	
R916		ERDS2TJ152	C.RESISTOR 1/4W 1.5K	1	
R917		ERJ6GEYJ470	M.RESISTOR CH 1/10W 47	1	
R964		ERJ6GEYJ101	M.RESISTOR CH 1/10W 100	1	
R965		ERJ6GEYJ102	M.RESISTOR CH 1/10W 1K	1	
R966-68		ERJ6GEYJ103	M.RESISTOR CH 1/10W 10K	3	
R969,70		ERJ6GEYJ472	M.RESISTOR CH 1/10W 4.7K	2	
R971		ERJ6GEYJ223	M.RESISTOR CH 1/10W 22K	1	
R972		ERJ6GEYJ331	M.RESISTOR CH 1/10W 330	1	
R974		ERJ6GEY0R00	M.RESISTOR CH 1/10W 0	1	
R986		ERDS2TJ331	C.RESISTOR 1/4W 330	1	
SW301,02		VJP1990	CONNECTOR	2	
SW304		VSS0126	SWITCH	1	
SW701,02		VJP1990	CONNECTOR	2	

Ref.No.		Part No.	Part Name & Description	Pcs	Remarks
SW704		VSS0126	SWITCH	1	
SW301S		VJS1990	CONNECTOR	1	
SW302S		VJS1990	CONNECTOR	1	
SW701S		VJS1990	CONNECTOR	1	
SW702S		VJS1990	CONNECTOR	1	
TP301,02		VJR0582	PACK PIN	2	
TP306-11		VJR0582	PACK PIN	6	
TP315,16		VJR0582	PACK PIN	2	
TP701-08		VJR0582	PACK PIN	8	
TPG301-03		VJR0582	PACK PIN	3	
TPG701-03		VJR0582	PACK PIN	3	
VC301		ECV1ZW10X53T	V.CAPACITOR 10P	1	
VC701		ECV1ZW20X53T	V.CAPACITOR 20P	1	
VL301		EIR7QF016B	COIL	1	
VL701		EIR7QF016B	COIL	1	
VL702		EIR7QF015B	COIL	1	
VR301		VRV0109B501	V.RESISTOR 500	1	
VR302		VRV0109B102	V.RESISTOR 1K	1	
VR303		VRV0109B501	V.RESISTOR 500	1	
VR304		VRV0109B102	V.RESISTOR 1K	1	
VR309		VRV0109B101	V.RESISTOR 100	1	
VR310		VRV0109B502	V.RESISTOR 5K	1	
VR311		VRV0109B501	V.RESISTOR 500	1	
VR312		VRV0064B104	V.RESISTOR 100K	1	
VR313-16		VRV0064B502	V.RESISTOR 5K	4	
VR317		VRV0109B501	V.RESISTOR 500	1	
VR318		VRV0109B203	V.RESISTOR 20K	1	
VR319,20		VRV0109B102	V.RESISTOR 1K	2	
VR321		VRV0109B203	V.RESISTOR 20K	1	
VR322		VRV0109B102	V.RESISTOR 1K	1	
VR323		VRV0109B203	V.RESISTOR 20K	1	
VR324		VRV0109B102	V.RESISTOR 1K	1	
VR701,02		VRV0109B501	V.RESISTOR 500	2	
VR709		VRV0109B501	V.RESISTOR 500	1	
VR710,11		VRV0064B502	V.RESISTOR 5K	2	
VR714		VRV0109B501	V.RESISTOR 500	1	
VR715		VRV0109B203	V.RESISTOR 20K	1	
VR716,17		VRV0109B102	V.RESISTOR 1K	2	
VR718		VRV0109B203	V.RESISTOR 20K	1	
VR719		VRV0109B102	V.RESISTOR 1K	1	
VR720		VRV0109B203	V.RESISTOR 20K	1	
VR721		VRV0109B102	V.RESISTOR 1K	1	
			MISCELLANEOUS		
		VML2143	CARD PULLER	1	
		VML2144	CARD PULLER	1	
		VMS4174	PIN	6	
		VMZ1547	BARRIER	1	
		VSC3056	SHIELD CASE	1	
		VXA3966	P.C.B. SHIELD PLATE	1	
		XNG26E	NUT	4	
		XYNV3+K6FR	SCREW	6	
		XYN26+C12	SCREW	4	

Refer to the P.C.BOARDS LIST, page 6-1-1, before using this page.

Ref.No.		Part No.	Part Name & Description	Pcs	Remarks
	■	VEP83098E	P.C.BOARD W/COMPONENT		FOR AU-65-E,B
			W3 MOD & DEMOD		
	■	VEP80667A	P.C.BOARD W/COMPONENT		ON VEP83098E
			W3 SUB		
			CAPACITORS		
C1,C2		ECEA1CU101	E.CAPACITOR 16V 100U	2	
C1		ECUM1H080DCN	C.CAPACITOR CH 50V 8P	1	FOR VEP83098E
C2		ECUM1H820JCN	C.CAPACITOR CH 50V 82P	1	FOR VEP83098E
C3		ECUM1E104ZFN	C.CAPACITOR CH 25V 0.1U	1	
C4		ECUM1H100DCN	C.CAPACITOR CH 50V 10P	1	
C5		ECUM1H020CCN	C.CAPACITOR CH 50V 2P	1	
C6		ECUM1H080DCN	C.CAPACITOR CH 50V 80P	1	
C7		ECUM1E104ZFN	C.CAPACITOR CH 25V 0.1U	1	
C10,11		ECUM1E104ZFN	C.CAPACITOR CH 25V 0.1U	2	
C12,13		ECUM1H103KBN	C.CAPACITOR CH 50V 0.01U	2	
C14		ECEA0JU470	E.CAPACITOR 6.3V 47U	1	
C15		VCM0028	V.CAPACITOR	1	
C16		ECEA0JU470	E.CAPACITOR 6.3V 47U	1	
C17		VCM0027	V.CAPACITOR	1	
C18-20		ECUM1H120JCN	C.CAPACITOR CH 50V 12P	3	
C21		ECUM1H560JCN	C.CAPACITOR CH 50V 56P	1	
C22		ECUM1H150JCN	C.CAPACITOR CH 50V 15P	1	
C23		ECUM1H221JCN	C.CAPACITOR CH 50V 220P	1	
C24		ECUM1H104KBM	C.CAPACITOR CH 50V 0.1U	1	
C25		ECUM1C104KBN	C.CAPACITOR CH 16V 0.1U	1	
C26		ECUM1H331JCN	C.CAPACITOR CH 50V 330P	1	
C27		ECUM1E104ZFN	C.CAPACITOR CH 25V 0.1U	1	
C28		ECUM1H472KBN	C.CAPACITOR CH 50V 4700P	1	
C29,30		ECUM1E104ZFN	C.CAPACITOR CH 25V 0.1U	2	
C31		ECEA1HUR47	E.CAPACITOR 50V 0.47U	1	
C32		VCM0047	M.CAPACITOR	1	
C33		ECUM1H103KBN	C.CAPACITOR CH 50V 0.01U	1	
C34		ECEA1AU221	E.CAPACITOR 10V 220U	1	
C35		ECUM1E104ZFN	C.CAPACITOR CH 25V 0.1U	1	
C36		ECUM1H220JUN	C.CAPACITOR CH 50V 22P	1	
C37		ECUM1H103KBN	C.CAPACITOR CH 50V 0.01U	1	
C38		ECUM1E104ZFN	C.CAPACITOR CH 25V 0.1U	1	
C39		ECUM1H390JCN	C.CAPACITOR CH 50V 39P	1	
C40		ECUM1H101JCN	C.CAPACITOR CH 50V 100P	1	
C42		ECEA1CU470	E.CAPACITOR 16V 47U	1	
C43,44		ECUM1H103KBN	C.CAPACITOR CH 50V 0.01U	2	
C45,46		ECUM1E104ZFN	C.CAPACITOR CH 25V 0.1U	2	
C47		ECUM1H221JCN	C.CAPACITOR CH 50V 220P	1	
C48		ECUM1H103KBN	C.CAPACITOR CH 50V 0.01U	1	
C49		ECUM1H332KBN	C.CAPACITOR CH 50V 3300P	1	
C50,51		ECUM1H560JCN	C.CAPACITOR CH 50V 56P	2	
C52		ECUM1E104ZFN	C.CAPACITOR CH 25V 0.1U	1	
C54		ECUM1H471JCN	C.CAPACITOR CH 50V 470P	1	
C55		ECCF1H270JC	C.CAPACITOR 50V 27P	1	
C56		ECUM1E104ZFN	C.CAPACITOR CH 25V 0.1U	1	
C57		ECEA1CU101	E.CAPACITOR 16V 100U	1	
C60		ECUM1E104ZFN	C.CAPACITOR CH 25V 0.1U	1	
C61		ECEA1CU101	E.CAPACITOR 16V 100U	1	
C62		ECUM1E104ZFN	C.CAPACITOR CH 25V 0.1U	1	
C63		ECEA1CU101	E.CAPACITOR 16V 100U	1	
C64		ECUM1E104ZFN	C.CAPACITOR CH 25V 0.1U	1	
C65		ECSF1CE106	T.CAPACITOR 16V 10U	1	
C66		ECUM1E104ZFN	C.CAPACITOR CH 25V 0.1U	1	
C67		ECSF1CE106	T.CAPACITOR 16V 10U	1	
C68		ECUM1E104ZFN	C.CAPACITOR CH 25V 0.1U	1	
C69,70		ECSF1CE106	T.CAPACITOR 16V 10U	2	
C71		ECUM1E104ZFN	C.CAPACITOR CH 25V 0.1U	1	
C72		ECEA1CU101	E.CAPACITOR 16V 100U	1	
C73,74		ECUM1E104ZFN	C.CAPACITOR CH 25V 0.1U	2	
C201,02		ECEA1CU101	E.CAPACITOR 16V 100U	2	
C203		ECUM1H100DCN	C.CAPACITOR CH 50V 10P	1	
C204		ECUM1H020CCN	C.CAPACITOR CH 50V 2P	1	

Ref.No.		Part No.	Part Name & Description	Pcs	Remarks
C205,06		ECUM1E104ZFN	C.CAPACITOR CH 25V 0.1U	2	
C207		ECEA1AU101	E.CAPACITOR 10V 100U	1	
C208		VCM0028	V.CAPACITOR	1	
C209		VCM0027	V.CAPACITOR	1	
C210-12		ECUM1H120JCN	C.CAPACITOR CH 50V 12P	3	
C215		ECUM1H180JCN	C.CAPACITOR CH 50V 18P	1	
C216		ECUM1H560JCN	C.CAPACITOR CH 50V 56P	1	
C217		ECUM1H103KBN	C.CAPACITOR CH 50V 0.01U	1	
C218,19		ECUM1E104ZFN	C.CAPACITOR CH 25V 0.1U	2	
C220,21		ECUM1H103KBN	C.CAPACITOR CH 50V 0.01U	2	
C222		ECEA1HUR47	E.CAPACITOR 50V 0.47U	1	
C223		ECUM1E104ZFN	C.CAPACITOR CH 25V 0.1U	1	
C224		ECUM1H271JCN	C.CAPACITOR CH 50V 270P	1	
C225		ECUM1H560JCN	C.CAPACITOR CH 50V 56P	1	
C226		VCM0023	M.CAPACITOR 379P	1	
C227		ECUM1E104ZFN	C.CAPACITOR CH 25V 0.1U	1	
C228		ECUM1H103KBN	C.CAPACITOR CH 50V 0.01U	1	
C229		ECEA1AU221	E.CAPACITOR 10V 220U	1	
C230		ECUM1E104ZFN	C.CAPACITOR CH 25V 0.1U	1	
C231		ECUM1H220JUN	C.CAPACITOR CH 50V 22P	1	
C232		ECUM1H103KBN	C.CAPACITOR CH 50V 0.01U	1	
C233		ECUM1H100DCN	C.CAPACITOR CH 50V 10P	1	
C234		ECUM1H220JCN	C.CAPACITOR CH 50V 22P	1	
C235		ECUM1H560JCN	C.CAPACITOR CH 50V 56P	1	
C236		ECUM1H060DCN	C.CAPACITOR CH 50V 6P	1	
C237		ECUM1H220JCN	C.CAPACITOR CH 50V 22P	1	
C238		ECUM1H180JCN	C.CAPACITOR CH 50V 18P	1	
C239		ECUM1H121JCN	C.CAPACITOR CH 50V 120P	1	
C240		ECUM1H100DCN	C.CAPACITOR CH 50V 10P	1	
C241		ECUM1H220JCN	C.CAPACITOR CH 50V 22P	1	
C242		ECUM1H221JCN	C.CAPACITOR CH 50V 220P	1	
C243		ECUM1E104ZFN	C.CAPACITOR CH 25V 0.1U	1	
C244		ECUM1H103KBN	C.CAPACITOR CH 50V 0.01U	1	
C245		ECEA1CU470	E.CAPACITOR 16V 47U	1	
C246-48		ECUM1E104ZFN	C.CAPACITOR CH 25V 0.1U	3	
C249		ECUM1H220JCN	C.CAPACITOR CH 50V 22P	1	
C250		ECUM1H680JCN	C.CAPACITOR CH 50V 68P	1	
C252,53		ECUM1H103KBN	C.CAPACITOR CH 50V 0.01U	2	
C254		ECEA1CU470	E.CAPACITOR 16V 47U	1	
C255		ECUM1H103KBN	C.CAPACITOR CH 50V 0.01U	1	
C256,57		ECUM1E104ZFN	C.CAPACITOR CH 25V 0.1U	2	
C258		ECUM1H120JCN	C.CAPACITOR CH 50V 12P	1	
C259		ECUM1H330JCN	C.CAPACITOR CH 50V 33P	1	
C261		ECCF1H270JC	C.CAPACITOR 50V 27P	1	
C301,02		ECUM1H103KBN	C.CAPACITOR CH 50V 0.01U	2	
C303		ECUM1H270JCN	C.CAPACITOR CH 50V 27P	1	
C304,05		ECUM1H103KBN	C.CAPACITOR CH 50V 0.01U	2	
C306		ECUM1H270JCN	C.CAPACITOR CH 50V 27P	1	
C307		ECEA1AU101	E.CAPACITOR 10V 100U	1	
C308,09		ECUM1H103KBN	C.CAPACITOR CH 50V 0.01U	2	
C310		ECEA1AU101	E.CAPACITOR 10V 100U	1	
C311		ECUM1H103KBN	C.CAPACITOR CH 50V 0.01U	1	
C316		ECUM1E104ZFN	C.CAPACITOR CH 25V 0.1U	1	
C322		ECUM1E104ZFN	C.CAPACITOR CH 25V 0.1U	1	
C325		ECUM1E104ZFN	C.CAPACITOR CH 25V 0.1U	1	
C326		ECUM1H103KBN	C.CAPACITOR CH 50V 0.01U	1	
C327		ECUM1E104ZFN	C.CAPACITOR CH 25V 0.1U	1	
C328,29		ECUM1H103KBN	C.CAPACITOR CH 50V 0.01U	2	
C340		ECUM1H103KBN	C.CAPACITOR CH 50V 0.01U	1	
C341		ECEA1CN100S	E.CAPACITOR 16V 10U	1	
C342		ECUM1H103KBN	C.CAPACITOR CH 50V 0.01U	1	
C343		ECUM1H150JCN	C.CAPACITOR CH 50V 15P	1	
C344		ECUM1H101JCN	C.CAPACITOR CH 50V 100P	1	
C345		ECUM1H100DCN	C.CAPACITOR CH 50V 10P	1	
C346		ECUM1H103KBN	C.CAPACITOR CH 50V 0.01U	1	
C347,48		ECEA1AU101	E.CAPACITOR 10V 100U	2	
C349		ECUM1H103KBN	C.CAPACITOR CH 50V 0.01U	1	
C350		ECUM1H820JCN	C.CAPACITOR CH 50V 82P	1	
C351		ECUM1H221JCN	C.CAPACITOR CH 50V 220P	1	
C352		ECUM1H103KBN	C.CAPACITOR CH 50V 0.01U	1	
C353		ECUM1H680JCN	C.CAPACITOR CH 50V 68P	1	
C354,55		ECUM1H103KBN	C.CAPACITOR CH 50V 0.01U	2	
C356		ECUM1E104ZFN	C.CAPACITOR CH 25V 0.1U	1	
C357		ECEA1HU2R2	E.CAPACITOR 50V 2.2U	1	
C358		ECEA1AU101	E.CAPACITOR 10V 100U	1	

Refer to the P.C.BOARDS LIST, page 6-1-1, before using this page.

Ref.No.		Part No.	Part Name & Description	Pcs	Remarks
C377,78		ECUM1H103KBN	C.CAPACITOR CH 50V 0.01U	2	
C380		ECUM1E104ZFN	C.CAPACITOR CH 25V 0.1U	1	
C381		ECUM1H103KBN	C.CAPACITOR CH 50V 0.01U	1	
C382		ECUM1E104ZFN	C.CAPACITOR CH 25V 0.1U	1	
C383		ECEA1AU101	E.CAPACITOR 10V 100U	1	
C386		ECUM1H050DCN	C.CAPACITOR CH 50V 50P	1	
C387		ECUM1H100DCN	C.CAPACITOR CH 50V 10P	1	
C389		ECUM1H331JCN	C.CAPACITOR CH 50V 330P	1	
C391		ECUM1H470JCN	C.CAPACITOR CH 50V 47P	1	
C392		ECUM1H103KBN	C.CAPACITOR CH 50V 0.01U	1	
C393		ECEA1AU101	E.CAPACITOR 10V 100U	1	
C394		ECUM1H103KBN	C.CAPACITOR CH 50V 0.01U	1	
C395		ECUM1E104ZFN	C.CAPACITOR CH 25V 0.1U	1	
C396,97		ECUM1H103KBN	C.CAPACITOR CH 50V 0.01U	2	
C398		ECUM1H180JCN	C.CAPACITOR CH 50V 18P	1	
C399		ECUM1H103KBN	C.CAPACITOR CH 50V 0.01U	1	
C400		ECUM1E104ZFN	C.CAPACITOR CH 25V 0.1U	1	
C401-03		ECUM1H103KBN	C.CAPACITOR CH 50V 0.01U	3	
C404		ECEA1AU101	E.CAPACITOR 10V 100U	1	
C405-07		ECUM1E104ZFN	C.CAPACITOR CH 25V 0.1U	3	
C408,09		ECUM1H270JCN	C.CAPACITOR CH 50V 27P	2	
C410		ECEA1AU471	E.CAPACITOR 10V 470U	1	
C411		ECUM1E104ZFN	C.CAPACITOR CH 25V 0.1U	1	
C412		ECUM1H221JCN	C.CAPACITOR CH 50V 220P	1	
C413		ECEA1AU101	E.CAPACITOR 10V 100U	1	
C414		ECUM1H470JCN	C.CAPACITOR CH 50V 47P	1	
C415		ECUM1H180JCN	C.CAPACITOR CH 50V 18P	1	
C416		ECUM1H181JCN	C.CAPACITOR CH 50V 180P	1	
C417,18		ECUM1E104ZFN	C.CAPACITOR CH 25V 0.1U	2	
C419		ECUM1H331JCN	C.CAPACITOR CH 50V 330P	1	
C420		ECUM1H220JCN	C.CAPACITOR CH 50V 22P	1	
C421		ECUM1H680JCN	C.CAPACITOR CH 50V 68P	1	
C422		ECUM1H330JCN	C.CAPACITOR CH 50V 33P	1	
C423		ECEA1AU101	E.CAPACITOR 10V 100U	1	
C424		ECEA1CU100	E.CAPACITOR 16V 10U	1	
C425		ECUM1H221JCN	C.CAPACITOR CH 50V 220P	1	
C426		VCM0044	M.CAPACITOR 130P	1	
C427		VCM0023	M.CAPACITOR 379P	1	
C428		ECUM1H680JCN	C.CAPACITOR CH 50V 68P	1	
C429		ECUM1H390JCN	C.CAPACITOR CH 50V 39P	1	
C430		ECUM1H331JCN	C.CAPACITOR CH 50V 330P	1	
C431		ECUM1H270JCN	C.CAPACITOR CH 50V 27P	1	
C432		ECEA0JU221	E.CAPACITOR 6.3V 220U	1	
C433		ECUM1H050DCN	C.CAPACITOR CH 50V 50P	1	
C434		ECUM1H470JCN	C.CAPACITOR CH 50V 47P	1	
C435		ECUM1H020CCN	C.CAPACITOR CH 50V 2P	1	
C436,37		ECUM1E104ZFN	C.CAPACITOR CH 25V 0.1U	2	
C440		ECUM1H470JCN	C.CAPACITOR CH 50V 47P	1	
C441		ECUM1H103KBN	C.CAPACITOR CH 50V 0.01U	1	
C442,43		ECEA1CU221	E.CAPACITOR 16V 220U	2	
C444,45		ECUM1H103KBN	C.CAPACITOR CH 50V 0.01U	2	
C446,47		VCM0027	V.CAPACITOR	2	
C448		ECEA1AU101	E.CAPACITOR 10V 100U	1	
C449		ECUM1E104ZFN	C.CAPACITOR CH 25V 0.1U	1	
C450		ECEA1AU101	E.CAPACITOR 10V 100U	1	
C451		ECEA1CU101	E.CAPACITOR 16V 100U	1	
C453		ECUM1E104ZFN	C.CAPACITOR CH 25V 0.1U	1	
C454		ECUM1H820JCN	C.CAPACITOR CH 50V 82P	1	
C455,56		ECUM1H103KBN	C.CAPACITOR CH 50V 0.01U	2	
C457,58		ECEA1AU101	E.CAPACITOR 10V 100U	2	
C459		ECUM1H151JCN	C.CAPACITOR CH 50V 150P	1	
C460		ECUM1H471JCN	C.CAPACITOR CH 50V 470P	1	
C461,62		ECEA1CU100	E.CAPACITOR 16V 10U	2	
C463		ECUM1H181JCN	C.CAPACITOR CH 50V 180P	1	
C464		ECUM1H680JCN	C.CAPACITOR CH 50V 68P	1	
C465,66		ECEA1AU101	E.CAPACITOR 10V 100U	2	
C467		ECUM1E104ZFN	C.CAPACITOR CH 25V 0.1U	1	
C468		ECUM1H103KBN	C.CAPACITOR CH 50V 0.01U	1	
C469		ECUM1H220JCN	C.CAPACITOR CH 50V 22P	1	
C470		ECCF1H330JC	C.CAPACITOR 50V 33P	1	
C471		ECCF1H060DC	C.CAPACITOR 50V 6P	1	
C701,02		ECUM1H103KBN	C.CAPACITOR CH 50V 0.01U	2	
C703		ECEA1AU101	E.CAPACITOR 10V 100U	1	
C704,05		ECUM1H103KBN	C.CAPACITOR CH 50V 0.01U	2	
C706		ECUM1H330JCN	C.CAPACITOR CH 50V 33P	1	

Ref.No.		Part No.	Part Name & Description	Pcs	Remarks
C725		ECUM1H180JCN	C.CAPACITOR CH 50V 18P	1	
C726		ECUM1H103KBN	C.CAPACITOR CH 50V 0.01U	1	
C727		ECUM1E104ZFN	C.CAPACITOR CH 25V 0.1U	1	
C728		ECUM1H220JCN	C.CAPACITOR CH 50V 22P	1	
C729		ECUM1H121JCN	C.CAPACITOR CH 50V 120P	1	
C730,31		ECUM1H103KBN	C.CAPACITOR CH 50V 0.01U	2	
C732		ECUM1H101JCN	C.CAPACITOR CH 50V 100P	1	
C733		ECEA1AU101	E.CAPACITOR 10V 100U	1	
C734		ECUM1H331JCN	C.CAPACITOR CH 50V 330P	1	
C735		ECEA1AU101	E.CAPACITOR 10V 100U	1	
C736		ECUM1H103KBN	C.CAPACITOR CH 50V 0.01U	1	
C737		ECUM1H101JCN	C.CAPACITOR CH 50V 100P	1	
C738		ECUM1H103KBN	C.CAPACITOR CH 50V 0.01U	1	
C740-42		ECUM1H103KBN	C.CAPACITOR CH 50V 0.01U	3	
C744		ECUM1E104ZFN	C.CAPACITOR CH 25V 0.1U	1	
C745		ECUM1H103KBN	C.CAPACITOR CH 50V 0.01U	1	
C746		ECUM1E104ZFN	C.CAPACITOR CH 25V 0.1U	1	
C747		ECEA1AU101	E.CAPACITOR 10V 100U	1	
C749		ECUM1H561JCN	C.CAPACITOR CH 50V 560P	1	
C750		ECUM1H331JCN	C.CAPACITOR CH 50V 330P	1	
C751		ECUM1H221JCN	C.CAPACITOR CH 50V 220P	1	
C752		ECUM1H561JCN	C.CAPACITOR CH 50V 560P	1	
C753		ECUM1H270JCN	C.CAPACITOR CH 50V 27P	1	
C754		ECUM1H181JCN	C.CAPACITOR CH 50V 180P	1	
C755		ECUM1H270JCN	C.CAPACITOR CH 50V 27P	1	
C756		ECUM1H101JCN	C.CAPACITOR CH 50V 100P	1	
C757		ECUM1H270JCN	C.CAPACITOR CH 50V 27P	1	
C758		ECUM1H050DCN	C.CAPACITOR CH 50V 50P	1	
C759		ECUM1E104ZFN	C.CAPACITOR CH 25V 0.1U	1	
C760		ECUM1H100DCN	C.CAPACITOR CH 50V 10P	1	
C762		ECUM1H391JCN	C.CAPACITOR CH 50V 390P	1	
C764		ECUM1H560JCN	C.CAPACITOR CH 50V 56P	1	
C765,66		ECUM1H103KBN	C.CAPACITOR CH 50V 0.01U	2	
C767		ECEA1AU101	E.CAPACITOR 10V 100U	1	
C768,69		ECUM1H103KBN	C.CAPACITOR CH 50V 0.01U	2	
C770		ECUM1H220JCN	C.CAPACITOR CH 50V 22P	1	
C771		ECUM1H681JCN	C.CAPACITOR CH 50V 680P	1	
C772		ECUM1E104ZFN	C.CAPACITOR CH 25V 0.1U	1	
C773-75		ECUM1H103KBN	C.CAPACITOR CH 50V 0.01U	3	
C776		ECUM1E104ZFN	C.CAPACITOR CH 25V 0.1U	1	
C777		ECEA1AU101	E.CAPACITOR 10V 100U	1	
C778,79		ECUM1E104ZFN	C.CAPACITOR CH 25V 0.1U	2	
C780,81		ECUM1H390JCN	C.CAPACITOR CH 50V 39P	2	
C782		ECEA1AU471	E.CAPACITOR 10V 470U	1	
C783		ECUM1E104ZFN	C.CAPACITOR CH 25V 0.1U	1	
C784		ECUM1H221JCN	C.CAPACITOR CH 50V 220P	1	
C785		ECEA1AU101	E.CAPACITOR 10V 100U	1	
C786		ECUM1H121JCN	C.CAPACITOR CH 50V 120P	1	
C787		ECUM1H100DCN	C.CAPACITOR CH 50V 10P	1	
C788		ECUM1H331JCN	C.CAPACITOR CH 50V 330P	1	
C789,90		ECUM1E104ZFN	C.CAPACITOR CH 25V 0.1U	2	
C791		ECUM1H331JCN	C.CAPACITOR CH 50V 330P	1	
C792		ECUM1H220JCN	C.CAPACITOR CH 50V 22P	1	
C793		ECUM1H680JCN	C.CAPACITOR CH 50V 68P	1	
C794		ECUM1H330JCN	C.CAPACITOR CH 50V 33P	1	
C796		ECEA1CU100	E.CAPACITOR 16V 10U	1	
C797		VCM0023	M.CAPACITOR 379P	1	
C799		ECEA0JU221	E.CAPACITOR 6.3V 220U	1	
C800		ECUM1H050DCN	C.CAPACITOR CH 50V 50P	1	
C801		ECUM1H020CCN	C.CAPACITOR CH 50V 2P	1	
C802		ECUM1H330JCN	C.CAPACITOR CH 50V 33P	1	
C803,04		ECUM1E104ZFN	C.CAPACITOR CH 25V 0.1U	2	
C805		ECUM1H470JCN	C.CAPACITOR CH 50V 47P	1	
C808		ECEA1CU221	E.CAPACITOR 16V 220U	1	
C810		ECEA1CU221	E.CAPACITOR 16V 220U	1	
C811,12		ECUM1H103KBN	C.CAPACITOR CH 50V 0.01U	2	
C813,14		VCM0027	V.CAPACITOR	2	
C815		ECEA1AU101	E.CAPACITOR 10V 100U	1	
C816		ECUM1E104ZFN	C.CAPACITOR CH 25V 0.1U	1	
C817		ECEA1AU101	E.CAPACITOR 10V 100U	1	
C818		ECUM1H220JCN	C.CAPACITOR CH 50V 22P	1	
C819		ECEA1CU101	E.CAPACITOR 16V 100U	1	
C821		ECUM1E104ZFN	C.CAPACITOR CH 25V 0.1U	1	
C822		ECUM1H101JCN	C.CAPACITOR CH 50V 100P	1	
C823,24		ECUM1H103KBN	C.CAPACITOR CH 50V 0.01U	2	

Refer to the P.C.BOARDS LIST, page 6-1-1, before using this page.

Ref.No.		Part No.	Part Name & Description	Pcs	Remarks
C825		ECEA1AU101	E.CAPACITOR 10V 100U	1	
C826		ECUM1H680JCN	C.CAPACITOR CH 50V 68P	1	
C827		ECUM1H100DCN	C.CAPACITOR CH 50V 10P	1	
C828		ECUM1H221JCN	C.CAPACITOR CH 50V 220P	1	
C829		ECEA1AU101	E.CAPACITOR 10V 100U	1	
C830,31		ECEA1CU100	E.CAPACITOR 16V 10U	2	
C832,33		ECEA1AU101	E.CAPACITOR 10V 100U	2	
C834		ECUM1H470JCN	C.CAPACITOR CH 50V 47P	1	
C835		ECUM1H680JCN	C.CAPACITOR CH 50V 68P	1	
C836		ECCF1H330JC	C.CAPACITOR 50V 33P	1	
C837		ECCF1H060DC	C.CAPACITOR 50V 6P	1	
D1,D2		MA151K	DIODE	2	
D3		MA151WK	DIODE	1	
D201		MA151WK	DIODE	1	
D301		MA151WK	DIODE	1	
D303		MA151K	DIODE	1	
D305		MA151K	DIODE	1	
D306,07		MA151WK	DIODE	2	
D308-10		MA151WA	DIODE	3	
D701		MA151WK	DIODE	1	
D702,03		MA151K	DIODE	2	
D705		MA151K	DIODE	1	
D706		MA151WK	DIODE	1	
D707		MA151WA	DIODE	1	
DL301		VLD0190	DELAY	1	
DL701		VLD0199	DELAY	1	
FL1		ELB5F100	FILTER	1	
FL201		ELB5F100	FILTER	1	
FL301		VLF0545	FILTER	1	
FL302		VLF0658	FILTER	1	
FL303		VLF0712	FILTER	1	
FL701		VLF0652	FILTER	1	
IC1		NE5539D	IC	1	
IC2		UPD4053BG	IC	1	
IC3		RC084M	IC	1	
IC4		RC082BM	IC	1	
IC5		AN6306S	IC	1	
IC6		MC14538BF	IC	1	
IC7		TC74HC221AF	IC	1	
IC9		AN79N09	IC	1	
IC10		AN79N09	IC	1	
IC11,12		AN79M05F	IC	2	
IC13		AN78M05F	IC	1	
IC14		AN78N05	IC	1	
IC15		AN78N09	IC	1	
IC16		AN78L05	IC	1	
IC17		AN78N09	IC	1	
IC201		NE5539D	IC	1	
IC202		TC74HC221AF	IC	1	
IC203		AN6306S	IC	1	
IC301		AN6308S	IC	1	
IC304		AN6308S	IC	1	
IC305		AN608P	IC	1	
IC306		NJM1496M	IC	1	
IC307		UPD4053BG	IC	1	
IC310		AN6308S	IC	1	
IC311-15		10116D	IC	5	
IC316		SN74LS123NS	IC	1	
IC317		MC74HC00AF	IC	1	
IC319		NE5539D	IC	1	
IC322		NJM592M8	IC	1	
IC323		MC74HC4053F	IC	1	
IC324		RC082BM	IC	1	

Ref.No.		Part No.	Part Name & Description	Pcs	Remarks
IC325		TC74HC221AF	IC	1	
IC326		RC082BM	IC	1	
IC701		AN6308S	IC	1	
IC705		NJM1496M	IC	1	
IC706		UPD4053BG	IC	1	
IC707		AN6308S	IC	1	
IC708-12		10116D	IC	5	
IC716		NE5539D	IC	1	
IC719		NJM592M8	IC	1	
IC720		MC74HC4053F	IC	1	
IC721		RC082BM	IC	1	
IC722		TC74HC221AF	IC	1	
L1,L2		VLQEL05F101K	COIL 100UH	2	
L1		VLQEL05S1R2J	COIL 1.2UH	1	FOR VEP83098E
L2		VLQEL05S5R6J	COIL 5.6UH	1	FOR VEP83098E
L3		VLQEL05S180J	COIL 18UH	1	
L4		VLQEL05S151J	COIL 150UH	1	
L5		VLQEL05F101K	COIL 100UH	1	
L6		VLQEL05S1R0J	COIL 1UH	1	
L7		VLQEL05F101K	COIL 100UH	1	
L201,02		VLQEL05F101K	COIL 100UH	2	
L203		VLQEL05S180J	COIL 18UH	1	
L204		VLQEL05S561J	COIL 560UH	1	
L205		VLQEL05F101K	COIL 100UH	1	
L206		VLQEL05S4R7J	COIL 4.7UH	1	
L207		VLQEL05S6R8J	COIL 6.8UH	1	
L208		VLQEL05S3R9J	COIL 3.9UH	1	
L209		VLQEL05S390J	COIL 39UH	1	
L210		VLQEL05F101K	COIL 100UH	1	
L211		VLQEL05S3R3J	COIL 3.3UH	1	
L212		VLQEL05F101K	COIL 100UH	1	
L301		VLQEL05F101K	COIL 100UH	1	
L302,03		VLQEL05S100J	COIL 10UH	2	
L304		VLQEL05F101K	COIL 100UH	1	
L308		VLQEL05S3R3J	COIL 3.3UH	1	
L309,10		VLQEL05F101K	COIL 100UH	2	
L311		VLQEL05S330J	COIL 33UH	1	
L312		VLQEL05S2R7J	COIL 2.7UH	1	
L313		VLQEL05F101K	COIL 100UH	1	
L318		VLQEL05F101K	COIL 100UH	1	
L320,21		VLQEL05S2R2J	COIL 2.2UH	2	
L322		VLQEL05S180J	COIL 18UH	1	
L323		VLQEL05F101K	COIL 100UH	1	
L324		VLQEL05S1R0J	COIL 1UH	1	
L325-27		VLQEL05F101K	COIL 100UH	3	
L328		VLQEL05S6R8J	COIL 6.8UH	1	
L329		VLQEL05F101K	COIL 100UH	1	
L330		VLQEL05S3R3J	COIL 3.3UH	1	
L333		VLQEL05F101K	COIL 100UH	1	
L334		VLQEL05S6R8K	COIL 6.8UH	1	
L335		VLQEL05F101K	COIL 100UH	1	
L339		VLQEL05S6R8J	COIL 6.8UH	1	
L340,41		VLQEL05F101K	COIL 100UH	2	
L342		VLQEL05S820J	COIL 82UH	1	
L343,44		VLQEL05F101K	COIL 100UH	2	
L701		VLQEL05F101K	COIL 100UH	1	
L702		VLQEL05S150J	COIL 15UH	1	
L709		VLQEL05S4R7J	COIL 4.7UH	1	
L710		VLQEL05F101K	COIL 100UH	1	
L711		VLQEL05S560J	COIL 56UH	1	
L712		VLQEL05F101K	COIL 100UH	1	
L713		VLQEL05S3R9J	COIL 3.9UH	1	
L715		VLQEL05F101K	COIL 100UH	1	
L716		VLQEL05S181J	COIL 180UH	1	
L717		VLQEL05S680J	COIL 68UH	1	
L718		VLQEL05S2R2J	COIL 2.2UH	1	
L719,20		VLQEL05S6R8J	COIL 6.8UH	2	
L721		VLQEL05S4R7J	COIL 4.7UH	1	
L722		VLQEL05S2R7J	COIL 2.7UH	1	
L722		VLQEL05S3R3J	COIL 3.3UH	1	
L723		VLQEL05S270J	COIL 27UH	1	
L724		VLQEL05F101K	COIL 100UH	1	

Refer to the P.C.BOARDS LIST, page 6-1-1, before using this page.

Ref.No.		Part No.	Part Name & Description	Pcs	Remarks
L725		VLQEL05S1R5J	COIL 1.5UH	1	
L726-28		VLQEL05F101K	COIL 100UH	3	
L729		VLQEL05S150J	COIL 15UH	1	
L731		VLQEL05F101K	COIL 100UH	1	
L732		VLQEL05S6R8K	COIL 6.8UH	1	
L733		VLQEL05F101K	COIL 100UH	1	
L737		VLQEL05S220J	COIL 22UH	1	
L738		VLQEL05S390J	COIL 39UH	1	
L739-42		VLQEL05F101K	COIL 100UH	4	
Q1		2SD601	TRANSISTOR CHIP	1	(Q,R)
Q2		2SC3757	TRANSISTOR	1	(Q,R)
Q3,Q4		2SA1226	TRANSISTOR	2	
Q7		2SC2480	TRANSISTOR	1	
Q8		2SA1462	TRANSISTOR	1	
Q9		2SC2295	TRANSISTOR CHIP	1	(B,C)
Q10		2SA1022-C	TRANSISTOR CHIP	1	(B,C)
Q11-13		2SA1226	TRANSISTOR	3	
Q14		2SC2295	TRANSISTOR CHIP	1	(B,C)
Q15		2SK374	TRANSISTOR	1	
Q16		2SA1226	TRANSISTOR	1	
Q17		2SC3757	TRANSISTOR	1	(Q,R)
Q18		2SA1226	TRANSISTOR	1	
Q19,20		2SC2295	TRANSISTOR CHIP	2	(B,C)
Q21		UN2213	TRANSISTOR-RESISTOR	1	
Q201		2SD601	TRANSISTOR CHIP	1	(Q,R)
Q202-04		2SC2480	TRANSISTOR	3	
Q206		2SC2295	TRANSISTOR CHIP	1	(B,C)
Q207		2SC2480	TRANSISTOR	1	
Q208		2SA1462	TRANSISTOR	1	
Q209		2SC2295	TRANSISTOR CHIP	1	(B,C)
Q210		2SA1022-C	TRANSISTOR CHIP	1	(B,C)
Q211		2SC2295	TRANSISTOR CHIP	1	(B,C)
Q212		2SA1022-C	TRANSISTOR CHIP	1	(B,C)
Q213		2SA1226	TRANSISTOR	1	
Q214		2SC2295	TRANSISTOR CHIP	1	(B,C)
Q215		2SC3757	TRANSISTOR	1	(Q,R)
Q216		2SC2295	TRANSISTOR CHIP	1	(B,C)
Q217		2SC3757	TRANSISTOR	1	(Q,R)
Q218		2SA1226	TRANSISTOR	1	
Q219,20		2SC2295	TRANSISTOR CHIP	2	(B,C)
Q301-04		2SC2295	TRANSISTOR CHIP	4	(B,C)
Q309,10		2SC2295	TRANSISTOR CHIP	2	(B,C)
Q311		2SA1022-C	TRANSISTOR CHIP	1	(B,C)
Q313,14		2SC2295	TRANSISTOR CHIP	2	(B,C)
Q315		2SA1022-C	TRANSISTOR CHIP	1	(B,C)
Q316		2SC2295	TRANSISTOR CHIP	1	(B,C)
Q317,18		2SA1022-C	TRANSISTOR CHIP	2	(B,C)
Q319		IMX4	TRANSISTOR	1	
Q320		UN2113	TRANSISTOR-RESISTOR	1	
Q324		2SC2295	TRANSISTOR CHIP	1	(B,C)
Q326		2SC2295	TRANSISTOR CHIP	1	(B,C)
Q327		2SA1022-C	TRANSISTOR CHIP	1	(B,C)
Q329-38		2SC2295	TRANSISTOR CHIP	10	(B,C)
Q339,40		UN2213	TRANSISTOR-RESISTOR	2	
Q341		2SA1462	TRANSISTOR	1	
Q342,43		2SC3757	TRANSISTOR	2	(Q,R)
Q344		2SC2295	TRANSISTOR CHIP	1	(B,C)
Q345		2SA1022-C	TRANSISTOR CHIP	1	(B,C)
Q346		2SC2480	TRANSISTOR	1	
Q347		2SA1462	TRANSISTOR	1	
Q348		2SC2480	TRANSISTOR	1	
Q349,50		2SA1226	TRANSISTOR	2	
Q351		2SK374	TRANSISTOR	1	
Q352		2SC3757	TRANSISTOR	1	(Q,R)
Q353		2SA1226	TRANSISTOR	1	
Q356-61		UN2113	TRANSISTOR-RESISTOR	6	
Q362,63		2SC2295	TRANSISTOR CHIP	2	(B,C)
Q364		2SA1022-C	TRANSISTOR CHIP	1	(B,C)
Q365,66		2SA1226	TRANSISTOR	2	
Q367		2SC3757	TRANSISTOR	1	(Q,R)
Q368,69		2SC2295	TRANSISTOR CHIP	2	(B,C)
Q370,71		UN2113	TRANSISTOR-RESISTOR	2	

Ref.No.		Part No.	Part Name & Description	Pcs	Remarks
Q372		2SC2295	TRANSISTOR CHIP	1	(B,C)
Q373-75		UN2213	TRANSISTOR-RESISTOR	3	
Q376		2SA1462	TRANSISTOR	1	
Q377		2SA1226	TRANSISTOR	1	
Q378		2SB709	TRANSISTOR CHIP	1	(Q,R)
Q379		2SC2480	TRANSISTOR	1	
Q380,81		2SC2295	TRANSISTOR CHIP	2	(B,C)
Q382-84		2SC3757	TRANSISTOR	3	(Q,R)
Q385,86		2SC2295	TRANSISTOR CHIP	2	(B,C)
Q387		2SA1022-C	TRANSISTOR CHIP	1	(B,C)
Q388		2SD601	TRANSISTOR CHIP	1	(Q,R)
Q389		2SB709	TRANSISTOR CHIP	1	(Q,R)
Q701,02		2SA1022-C	TRANSISTOR CHIP	2	(B,C)
Q710,11		2SC2295	TRANSISTOR CHIP	2	(B,C)
Q712		2SA1022-C	TRANSISTOR CHIP	1	(B,C)
Q713		2SC2295	TRANSISTOR CHIP	1	(B,C)
Q714,15		2SA1022-C	TRANSISTOR CHIP	2	(B,C)
Q716		2SC2295	TRANSISTOR CHIP	1	(B,C)
Q718		2SC2295	TRANSISTOR CHIP	1	(B,C)
Q719		2SA1022-C	TRANSISTOR CHIP	1	(B,C)
Q721-30		2SC2295	TRANSISTOR CHIP	10	(B,C)
Q731		UN2213	TRANSISTOR-RESISTOR	1	
Q732		2SA1462	TRANSISTOR	1	
Q733		2SC2295	TRANSISTOR CHIP	1	(B,C)
Q734		2SA1022-C	TRANSISTOR CHIP	1	(B,C)
Q735		2SC2480	TRANSISTOR	1	
Q736		2SA1462	TRANSISTOR	1	
Q737		2SC2480	TRANSISTOR	1	
Q738,39		2SA1226	TRANSISTOR	2	
Q740		2SK374	TRANSISTOR	1	
Q741		2SC3757	TRANSISTOR	1	(Q,R)
Q742		2SA1226	TRANSISTOR	1	
Q745,46		2SC2295	TRANSISTOR CHIP	2	(B,C)
Q747		2SA1022-C	TRANSISTOR CHIP	1	(B,C)
Q748,49		2SA1226	TRANSISTOR	2	
Q750		2SC3757	TRANSISTOR	1	(Q,R)
Q751		2SC2295	TRANSISTOR CHIP	1	(B,C)
Q753		2SC2295	TRANSISTOR CHIP	1	(B,C)
Q754		2SA1462	TRANSISTOR	1	
Q755		2SA1226	TRANSISTOR	1	
Q756		2SB709	TRANSISTOR CHIP	1	(Q,R)
Q757		2SC2480	TRANSISTOR	1	
Q758-60		2SC3757	TRANSISTOR	3	(Q,R)
Q761		2SC2295	TRANSISTOR CHIP	1	(B,C)
Q762		2SA1022-C	TRANSISTOR CHIP	1	(B,C)
Q763		2SD601	TRANSISTOR CHIP	1	(Q,R)
Q764		2SB709	TRANSISTOR CHIP	1	(Q,R)
			RESISTORS		
R1		ERJ6GEYJ471	M.RESISTOR CH 1/10W 470	1	
R2		ERJ6GEYJ470	M.RESISTOR CH 1/10W 47	1	
R1,R2		ERJ6GEYJ151	M.RESISTOR CH 1/10W 150	1	FOR VEP83098E
R3		ERJ6GEYJ152	M.RESISTOR CH 1/10W 1.5K	1	
R3		ERJ6GEYJ331	M.RESISTOR CH 1/10W 330	1	FOR VEP83098E
R4,R5		ERJ6GEYG331	M.RESISTOR CH 1/10W 330	2	
R6		ERJ6GEYJ101	M.RESISTOR CH 1/10W 100	1	
R7		ERJ6GEYJ151	M.RESISTOR CH 1/10W 150	1	
R8		ERJ6GEYJ332	M.RESISTOR CH 1/10W 3.3K	1	
R9		ERJ6GEYJ561	M.RESISTOR CH 1/10W 560	1	
R10		ERJ6GEYJ332	M.RESISTOR CH 1/10W 3.3K	1	
R11		ERJ6GEYJ101	M.RESISTOR CH 1/10W 100	1	
R12		ERJ6GEYJ332	M.RESISTOR CH 1/10W 3.3K	1	
R13		ERJ6GEYJ103	M.RESISTOR CH 1/10W 10K	1	
R14,15		ERJ6GEYJ101	M.RESISTOR CH 1/10W 100	2	
R16		ERJ6GEYJ222	M.RESISTOR CH 1/10W 2.2K	1	
R17		ERJ6GEYJ682	M.RESISTOR CH 1/10W 6.8K	1	
R18		ERJ6GEYJ152	M.RESISTOR CH 1/10W 1.5K	1	
R19		ERJ6GEYJ103	M.RESISTOR CH 1/10W 10K	1	
R20		ERJ6GEYJ472	M.RESISTOR CH 1/10W 4.7K	1	
R27		ERJ6GEYG223	M.RESISTOR CH 1/10W 22K	1	
R28,29		ERJ6GEYJ221	M.RESISTOR CH 1/10W 220	2	
R30,31		ERJ6GEYJ183	M.RESISTOR CH 1/10W 18K	2	
R32,33		ERJ6GEYJ273	M.RESISTOR CH 1/10W 27K	2	

Refer to the P.C.BOARDS LIST, page 6-1-1, before using this page.

Ref.No.		Part No.	Part Name & Description	Pcs	Remarks
R34,35		ERJ6GEYJ681	M.RESISTOR CH 1/10W 680	2	
R36		ERJ6GEYJ471	M.RESISTOR CH 1/10W 470	1	
R37		ERJ6GEYJ273	M.RESISTOR CH 1/10W 27K	1	
R38		VRE0034E43A	M.RESISTOR CH 1/10W	1	
R39		VRE0034E82A	M.RESISTOR CH 1/10W	1	
R40		ERJ6GEYJ821	M.RESISTOR CH 1/10W 820	1	
R41		VRE0034E89A	M.RESISTOR CH 1/10W 825	1	
R42		ERJ6GEYJ470	M.RESISTOR CH 1/10W 47	1	
R43		ERJ6GEYJ682	M.RESISTOR CH 1/10W 6.8K	1	
R44		ERJ6GEYJ152	M.RESISTOR CH 1/10W 1.5K	1	
R45		VRE0034E26A	M.RESISTOR CH 1/10W 182	1	
R46		ERJ6GEYJ222	M.RESISTOR CH 1/10W 2.2K	1	
R47		ERJ6GEYJ102	M.RESISTOR CH 1/10W 1K	1	
R48		ERJ6GEYJ331	M.RESISTOR CH 1/10W 330	1	
R49		ERJ6GEYJ181	M.RESISTOR CH 1/10W 180	1	
R50		ERJ6GEYJ101	M.RESISTOR CH 1/10W 100	1	
R51		ERJ6GEYJ332	M.RESISTOR CH 1/10W 3.3K	1	
R52		ERJ6GEYJ102	M.RESISTOR CH 1/10W 1K	1	
R53		ERJ6GEYJ221	M.RESISTOR CH 1/10W 220	1	
R54		ERJ6GEYK225	M.RESISTOR CH 1/10W 2.2M	1	
R55,56		ERJ6GEYJ101	M.RESISTOR CH 1/10W 100	2	
R57		ERJ6GEYG103	M.RESISTOR CH 1/10W 10K	1	
R58		ERJ6GEYJ105	M.RESISTOR CH 1/10W 1M	1	
R59		ERJ6GEYK225	M.RESISTOR CH 1/10W 2.2M	1	
R60		ERJ6GEYJ472	M.RESISTOR CH 1/10W 4.7K	1	
R61		ERJ6GEYJ682	M.RESISTOR CH 1/10W 6.8K	1	
R62		ERJ6GEYJ103	M.RESISTOR CH 1/10W 10K	1	
R63		ERJ6GEYJ101	M.RESISTOR CH 1/10W 100	1	
R64		ERJ6GEYG243	M.RESISTOR CH 1/10W 24K	1	
R65		ERJ6GEYJ103	M.RESISTOR CH 1/10W 10K	1	
R66		ERJ6GEYJ105	M.RESISTOR CH 1/10W 1M	1	
R67		VRE0034E27B	M.RESISTOR CH 1/10W 1.87K	1	
R68		ERJ6GEYK5R6	M.RESISTOR CH 1/10W 5.6	1	
R69		VRE0034E751	M.RESISTOR CH 1/10W 750	1	
R70		ERJ6GEYJ222	M.RESISTOR CH 1/10W 2.2K	1	
R71		ERJ6GEYJ272	M.RESISTOR CH 1/10W 2.7K	1	
R72		ERJ6GEYJ103	M.RESISTOR CH 1/10W 10K	1	
R73,74		ERJ6GEYJ101	M.RESISTOR CH 1/10W 100	2	
R75,76		ERJ6GEYJ154	M.RESISTOR CH 1/10W 150K	2	
R77		ERJ6GEYJ332	M.RESISTOR CH 1/10W 3.3K	1	
R78		ERJ6GEYJ470	M.RESISTOR CH 1/10W 47	1	
R79		ERJ6GEYJ331	M.RESISTOR CH 1/10W 330	1	
R80		ERJ6GEYJ151	M.RESISTOR CH 1/10W 150	1	
R81		ERJ6GEYJ102	M.RESISTOR CH 1/10W 1K	1	
R82,83		ERJ6GEYJ470	M.RESISTOR CH 1/10W 47	2	
R84,85		ERJ6GEYJ102	M.RESISTOR CH 1/10W 1K	2	
R86,87		ERJ6GEYJ101	M.RESISTOR CH 1/10W 100	2	
R88		ERJ6GEYJ222	M.RESISTOR CH 1/10W 2.2K	1	
R89		ERJ6GEYJ331	M.RESISTOR CH 1/10W 330	1	
R90		ERJ6GEYJ102	M.RESISTOR CH 1/10W 1K	1	
R92		ERJ6GEYJ101	M.RESISTOR CH 1/10W 100	1	
R93		ERJ6GEYJ470	M.RESISTOR CH 1/10W 47	1	
R94		ERJ6GEYJ473	M.RESISTOR CH 1/10W 47K	1	
R95		ERJ6GEYJ153	M.RESISTOR CH 1/10W 15K	1	
R96		ERJ6GEYJ223	M.RESISTOR CH 1/10W 22K	1	
R97		ERJ6GEYJ153	M.RESISTOR CH 1/10W 15K	1	
R98		ERJ6GEYJ103	M.RESISTOR CH 1/10W 10K	1	
R99		ERJ6GEYJ332	M.RESISTOR CH 1/10W 3.3K	1	
R102		ERJ6GEYG472	M.RESISTOR CH 1/10W 4.7K	1	
R103		ERJ6GEYG182	M.RESISTOR CH 1/10W 1.8K	1	
R104		ERJ6GEYG104	M.RESISTOR CH 1/10W 100K	1	
R105		ERJ6GEYJ222	M.RESISTOR CH 1/10W 2.2K	1	
R201		ERJ6GEYJ471	M.RESISTOR CH 1/10W 470	1	
R202		ERJ6GEYJ101	M.RESISTOR CH 1/10W 100	1	
R203		ERJ6GEYJ152	M.RESISTOR CH 1/10W 1.5K	1	
R204,05		ERJ6GEYG331	M.RESISTOR CH 1/10W 330	2	
R206		ERJ6GEYJ101	M.RESISTOR CH 1/10W 100	1	
R207		ERJ6GEYJ151	M.RESISTOR CH 1/10W 150	1	
R208		ERJ6GEYJ681	M.RESISTOR CH 1/10W 680	1	
R209,10		ERJ6GEYJ332	M.RESISTOR CH 1/10W 3.3K	2	
R211,12		ERJ6GEYJ101	M.RESISTOR CH 1/10W 100	2	
R213,14		ERJ6GEYJ152	M.RESISTOR CH 1/10W 1.5K	2	
R215		VRE0034E43A	M.RESISTOR CH 1/10W	1	
R216		ERJ6GEYJ273	M.RESISTOR CH 1/10W 27K	1	
R217		VRE0034E82A	M.RESISTOR CH 1/10W	1	

Ref.No.		Part No.	Part Name & Description	Pcs	Remarks
R218		ERJ6GEYJ471	M.RESISTOR CH 1/10W 470	1	
R219		VRE0034E89A	M.RESISTOR CH 1/10W 825	1	
R220		ERJ6GEYJ470	M.RESISTOR CH 1/10W 47	1	
R221		ERJ6GEYJ102	M.RESISTOR CH 1/10W 1K	1	
R222		ERJ6GEYJ222	M.RESISTOR CH 1/10W 2.2K	1	
R223		ERJ6GEYJ102	M.RESISTOR CH 1/10W 1K	1	
R224		VRE0034E26A	M.RESISTOR CH 1/10W 182	1	
R225		ERJ6GEYJ331	M.RESISTOR CH 1/10W 330	1	
R231		ERJ6GEYJ332	M.RESISTOR CH 1/10W 3.3K	1	
R232		ERJ6GEYJ101	M.RESISTOR CH 1/10W 100	1	
R233		ERJ6GEYJ332	M.RESISTOR CH 1/10W 3.3K	1	
R234		ERJ6GEYG223	M.RESISTOR CH 1/10W 22K	1	
R235,36		ERJ6GEYJ221	M.RESISTOR CH 1/10W 220	2	
R237,38		ERJ6GEYJ183	M.RESISTOR CH 1/10W 18K	2	
R239,40		ERJ6GEYJ273	M.RESISTOR CH 1/10W 27K	2	
R241		ERJ6GEYJ681	M.RESISTOR CH 1/10W 680	1	
R242		ERJ6GEYJ181	M.RESISTOR CH 1/10W 180	1	
R243		ERJ6GEYJ332	M.RESISTOR CH 1/10W 3.3K	1	
R244		ERJ6GEYK475	M.RESISTOR CH 1/10W 4.7M	1	
R245		ERJ6GEYJ181	M.RESISTOR CH 1/10W 180	1	
R246		ERJ6GEYJ472	M.RESISTOR CH 1/10W 4.7K	1	
R247		ERJ6GEYJ563	M.RESISTOR CH 1/10W 56K	1	
R248		ERJ6GEYJ153	M.RESISTOR CH 1/10W 15K	1	
R249		VRE0034E751	M.RESISTOR CH 1/10W 750	1	
R250		VRE0034E27B	M.RESISTOR CH 1/10W 1.87K	1	
R251		ERJ6GEYK5R6	M.RESISTOR CH 1/10W 5.6	1	
R252		ERJ6GEYJ222	M.RESISTOR CH 1/10W 2.2K	1	
R253		ERJ6GEYJ272	M.RESISTOR CH 1/10W 2.7K	1	
R254		ERJ6GEYJ103	M.RESISTOR CH 1/10W 10K	1	
R255,56		ERJ6GEYJ680	M.RESISTOR CH 1/10W 68	2	
R257,58		ERJ6GEYJ154	M.RESISTOR CH 1/10W 150K	2	
R259		ERJ6GEYJ332	M.RESISTOR CH 1/10W 3.3K	1	
R260		ERJ6GEYJ750	M.RESISTOR CH 1/10W 75	1	
R261		ERJ6GEYJ470	M.RESISTOR CH 1/10W 47	1	
R262		ERJ6GEYJ471	M.RESISTOR CH 1/10W 470	1	
R263		ERJ6GEYJ391	M.RESISTOR CH 1/10W 390	1	
R264		ERJ6GEYG240	M.RESISTOR CH 1/10W 24	1	
R265		ERJ6GEYJ471	M.RESISTOR CH 1/10W 470	1	
R266		ERJ6GEYJ470	M.RESISTOR CH 1/10W 47	1	
R267		ERJ6GEYJ562	M.RESISTOR CH 1/10W 5.6K	1	
R268		ERJ6GEYJ472	M.RESISTOR CH 1/10W 4.7K	1	
R269,70		ERJ6GEYJ102	M.RESISTOR CH 1/10W 1K	2	
R271		ERJ6GEYJ222	M.RESISTOR CH 1/10W 2.2K	1	
R272		ERJ6GEYJ331	M.RESISTOR CH 1/10W 330	1	
R273		ERJ6GEYJ472	M.RESISTOR CH 1/10W 4.7K	1	
R274		ERJ6GEYJ470	M.RESISTOR CH 1/10W 47	1	
R275		ERJ6GEYJ682	M.RESISTOR CH 1/10W 6.8K	1	
R276		ERJ6GEYJ332	M.RESISTOR CH 1/10W 3.3K	1	
R277		ERJ6GEYJ222	M.RESISTOR CH 1/10W 2.2K	1	
R278		ERJ6GEYJ182	M.RESISTOR CH 1/10W 1.8K	1	
R279,80		ERJ6GEYJ470	M.RESISTOR CH 1/10W 47	2	
R281		ERJ6GEYJ222	M.RESISTOR CH 1/10W 2.2K	1	
R282,83		ERJ6GEYJ101	M.RESISTOR CH 1/10W 100	2	
R284		ERJ6GEYJ472	M.RESISTOR CH 1/10W 4.7K	1	
R285		ERJ6GEYJ222	M.RESISTOR CH 1/10W 2.2K	1	
R286		ERJ6GEYJ331	M.RESISTOR CH 1/10W 330	1	
R287		ERJ6GEYJ102	M.RESISTOR CH 1/10W 1K	1	
R288		ERJ6GEYJ470	M.RESISTOR CH 1/10W 47	1	
R289		ERJ6GEYJ101	M.RESISTOR CH 1/10W 100	1	
R290		ERJ6GEYG152	M.RESISTOR CH 1/10W 1.5K	1	
R291		ERJ6GEYJ222	M.RESISTOR CH 1/10W 2.2K	1	
R293		ERJ6GEYJ222	M.RESISTOR CH 1/10W 2.2K	1	
R301		ERJ6GEYJ470	M.RESISTOR CH 1/10W 47	1	
R302		ERJ6GEYJ681	M.RESISTOR CH 1/10W 680	1	
R303		ERJ6GEYJ102	M.RESISTOR CH 1/10W 1K	1	
R304		ERJ6GEYJ332	M.RESISTOR CH 1/10W 3.3K	1	
R305		ERJ6GEYJ470	M.RESISTOR CH 1/10W 47	1	
R306		ERJ6GEYJ681	M.RESISTOR CH 1/10W 680	1	
R307		ERJ6GEYJ102	M.RESISTOR CH 1/10W 1K	1	
R308		ERJ6GEYJ332	M.RESISTOR CH 1/10W 3.3K	1	
R309		ERJ6GEYJ222	M.RESISTOR CH 1/10W 2.2K	1	
R310		ERJ6GEYJ470	M.RESISTOR CH 1/10W 47	1	
R322		ERJ6GEYJ470	M.RESISTOR CH 1/10W 47	1	
R323		ERJ6GEYJ152	M.RESISTOR CH 1/10W 1.5K	1	
R324		ERJ6GEYJ470	M.RESISTOR CH 1/10W 47	1	

Refer to the P.C.BOARDS LIST, page 6-1-1, before using this page.

Ref.No.		Part No.	Part Name & Description	Pcs	Remarks
R325,26		ERJ6GEYJ102	M.RESISTOR CH 1/10W 1K	2	
R327		ERJ6GEYJ103	M.RESISTOR CH 1/10W 10K	1	
R328		ERJ6GEYJ105	M.RESISTOR CH 1/10W 1M	1	
R329		ERJ6GEYJ224	M.RESISTOR CH 1/10W 220K	1	
R330		ERJ6GEYJ473	M.RESISTOR CH 1/10W 47K	1	
R331		ERJ6GEYJ223	M.RESISTOR CH 1/10W 22K	1	
R332		ERJ6GEYJ152	M.RESISTOR CH 1/10W 1.5K	1	
R333,34		ERJ6GEYG471	M.RESISTOR CH 1/10W 470	2	
R335,36		ERJ6GEYJ470	M.RESISTOR CH 1/10W 47	2	
R337,38		ERJ6GEYJ222	M.RESISTOR CH 1/10W 2.2K	2	
R339,40		ERJ6GEYJ271	M.RESISTOR CH 1/10W 270	2	
R341		ERJ6GEYJ470	M.RESISTOR CH 1/10W 47	1	
R342		ERJ6GEYJ271	M.RESISTOR CH 1/10W 270	1	
R343		ERJ6GEYJ821	M.RESISTOR CH 1/10W 820	1	
R344		ERJ6GEYJ470	M.RESISTOR CH 1/10W 47	1	
R345		ERJ6GEYJ222	M.RESISTOR CH 1/10W 2.2K	1	
R346		ERJ6GEYJ102	M.RESISTOR CH 1/10W 1K	1	
R347		ERJ6GEYG331	M.RESISTOR CH 1/10W 330	1	
R348		ERJ6GEYJ153	M.RESISTOR CH 1/10W 15K	1	
R349		ERJ6GEYJ223	M.RESISTOR CH 1/10W 22K	1	
R350,51		ERJ6GEYJ220	M.RESISTOR CH 1/10W 22	2	
R352		ERJ6GEYJ470	M.RESISTOR CH 1/10W 47	1	
R353		ERJ6GEYJ152	M.RESISTOR CH 1/10W 1.5K	1	
R354		ERJ6GEYJ471	M.RESISTOR CH 1/10W 470	1	
R355		ERJ6GEYJ102	M.RESISTOR CH 1/10W 1K	1	
R356		ERJ6GEYJ221	M.RESISTOR CH 1/10W 220	1	
R357		ERJ6GEYJ222	M.RESISTOR CH 1/10W 2.2K	1	
R358		ERJ6GEYJ101	M.RESISTOR CH 1/10W 100	1	
R359		ERJ6GEYJ472	M.RESISTOR CH 1/10W 4.7K	1	
R360,61		ERJ6GEYJ473	M.RESISTOR CH 1/10W 47K	2	
R362		ERJ6GEYJ472	M.RESISTOR CH 1/10W 4.7K	1	
R363		ERJ6GEYJ223	M.RESISTOR CH 1/10W 22K	1	
R364		ERJ6GEYJ273	M.RESISTOR CH 1/10W 27K	1	
R365		ERJ6GEYJ473	M.RESISTOR CH 1/10W 47K	1	
R366		ERJ6GEYJ223	M.RESISTOR CH 1/10W 22K	1	
R367		ERJ6GEYJ104	M.RESISTOR CH 1/10W 100K	1	
R368		ERJ6GEYJ472	M.RESISTOR CH 1/10W 4.7K	1	
R369		ERJ6GEYJ103	M.RESISTOR CH 1/10W 10K	1	
R370		ERJ6GEYJ223	M.RESISTOR CH 1/10W 22K	1	
R371		ERJ6GEYJ682	M.RESISTOR CH 1/10W 6.8K	1	
R394		ERJ6GEYJ471	M.RESISTOR CH 1/10W 470	1	
R395		ERJ6GEYJ101	M.RESISTOR CH 1/10W 100	1	
R396		ERJ6GEYJ222	M.RESISTOR CH 1/10W 2.2K	1	
R397		ERJ6GEYJ470	M.RESISTOR CH 1/10W 47	1	
R398		ERJ6GEYJ152	M.RESISTOR CH 1/10W 1.5K	1	
R399,00		ERJ6GEYG301	M.RESISTOR CH 1/10W 300	2	
R401		ERJ6GEYJ470	M.RESISTOR CH 1/10W 47	1	
R402		ERJ6GEYJ102	M.RESISTOR CH 1/10W 1K	1	
R403		ERJ6GEYJ681	M.RESISTOR CH 1/10W 680	1	
R404		ERJ6GEYJ102	M.RESISTOR CH 1/10W 1K	1	
R405		ERJ6GEYJ152	M.RESISTOR CH 1/10W 1.5K	1	
R406		ERJ6GEYJ470	M.RESISTOR CH 1/10W 47	1	
R407		ERJ6GEYJ221	M.RESISTOR CH 1/10W 220	1	
R408		ERJ6GEYJ222	M.RESISTOR CH 1/10W 2.2K	1	
R409		ERJ6GEYJ470	M.RESISTOR CH 1/10W 47	1	
R410		ERJ6GEYJ152	M.RESISTOR CH 1/10W 1.5K	1	
R411,12		ERJ6GEYJ331	M.RESISTOR CH 1/10W 330	2	
R413		ERJ6GEYJ470	M.RESISTOR CH 1/10W 47	1	
R414		ERJ6GEYJ222	M.RESISTOR CH 1/10W 2.2K	1	
R415		ERJ6GEYJ470	M.RESISTOR CH 1/10W 47	1	
R426		ERJ6GEYJ470	M.RESISTOR CH 1/10W 47	1	
R427-34		ERJ6GEYJ102	M.RESISTOR CH 1/10W 1K	8	
R435,36		ERJ6GEYJ332	M.RESISTOR CH 1/10W 3.3K	2	
R437		ERJ6GEYJ101	M.RESISTOR CH 1/10W 100	1	
R438,39		ERJ6GEYJ471	M.RESISTOR CH 1/10W 470	2	
R440		ERJ6GEYJ470	M.RESISTOR CH 1/10W 47	1	
R441,42		ERJ6GEYJ681	M.RESISTOR CH 1/10W 680	2	
R443,44		ERJ6GEYJ101	M.RESISTOR CH 1/10W 100	2	
R445		ERJ6GEYJ470	M.RESISTOR CH 1/10W 47	1	
R446		ERJ6GEYJ151	M.RESISTOR CH 1/10W 150	1	
R447,48		ERJ6GEYJ222	M.RESISTOR CH 1/10W 2.2K	2	
R449		ERJ6GEYJ470	M.RESISTOR CH 1/10W 47	1	
R450,51		ERJ6GEYJ222	M.RESISTOR CH 1/10W 2.2K	2	
R452,53		ERJ6GEYJ470	M.RESISTOR CH 1/10W 47	2	
R454-65		ERJ6GEYJ102	M.RESISTOR CH 1/10W 1K	12	
R466		ERJ6GEYJ683	M.RESISTOR CH 1/10W 68K	1	
R467,68		ERJ6GEYJ103	M.RESISTOR CH 1/10W 10K	2	
R469,70		ERJ6GEYJ150	M.RESISTOR CH 1/10W 15	2	
R471,72		ERJ6GEYJ332	M.RESISTOR CH 1/10W 3.3K	2	
R473		ERJ6GEYJ101	M.RESISTOR CH 1/10W 100	1	
R474		ERDS2TJ222	C.RESISTOR 1/4W 2.2K	1	
R475		ERJ6GEYJ102	M.RESISTOR CH 1/10W 1K	1	
R477		ERJ6GEYJ471	M.RESISTOR CH 1/10W 470	1	
R478		ERJ6GEYJ102	M.RESISTOR CH 1/10W 1K	1	
R479		ERJ6GEYJ222	M.RESISTOR CH 1/10W 2.2K	1	
R480,81		ERJ6GEYJ471	M.RESISTOR CH 1/10W 470	2	
R482		ERJ6GEYJ470	M.RESISTOR CH 1/10W 47	1	
R483,84		ERJ6GEYJ333	M.RESISTOR CH 1/10W 33K	2	
R485,86		ERJ6GEYJ102	M.RESISTOR CH 1/10W 1K	2	
R487		ERJ6GEYJ222	M.RESISTOR CH 1/10W 2.2K	1	
R488		ERJ6GEYJ221	M.RESISTOR CH 1/10W 220	1	
R489		ERJ6GEYJ392	M.RESISTOR CH 1/10W 3.9K	1	
R490		ERJ6GEYJ470	M.RESISTOR CH 1/10W 47	1	
R491		ERJ6GEYJ333	M.RESISTOR CH 1/10W 33K	1	
R492		ERJ6GEYJ471	M.RESISTOR CH 1/10W 470	1	
R493		ERJ6GEYJ152	M.RESISTOR CH 1/10W 1.5K	1	
R494,95		ERJ6GEYJ101	M.RESISTOR CH 1/10W 100	2	
R496		ERJ6GEYJ222	M.RESISTOR CH 1/10W 2.2K	1	
R497		ERJ6GEYJ102	M.RESISTOR CH 1/10W 1K	1	
R498		ERJ6GEYJ101	M.RESISTOR CH 1/10W 100	1	
R499		ERJ6GEYJ332	M.RESISTOR CH 1/10W 3.3K	1	
R500		ERJ6GEYJ223	M.RESISTOR CH 1/10W 22K	1	
R501		ERJ6GEYJ332	M.RESISTOR CH 1/10W 3.3K	1	
R502		ERJ6GEYJ472	M.RESISTOR CH 1/10W 4.7K	1	
R503		ERJ6GEYJ103	M.RESISTOR CH 1/10W 10K	1	
R504		ERJ6GEYJ683	M.RESISTOR CH 1/10W 68K	1	
R505,06		ERJ6GEYJ473	M.RESISTOR CH 1/10W 47K	2	
R508		ERJ6GEYJ471	M.RESISTOR CH 1/10W 470	1	
R509		ERJ6GEYJ221	M.RESISTOR CH 1/10W 220	1	
R510		ERJ6GEYJ392	M.RESISTOR CH 1/10W 3.9K	1	
R511		VRE0034E27B	M.RESISTOR CH 1/10W 1.87K	1	
R512		VRE0034E751	M.RESISTOR CH 1/10W 750	1	
R513		ERJ6GEYJ332	M.RESISTOR CH 1/10W 3.3K	1	
R514		ERJ6GEYJ152	M.RESISTOR CH 1/10W 1.5K	1	
R515		ERJ6GEYJ682	M.RESISTOR CH 1/10W 6.8K	1	
R516		ERJ6GEYG301	M.RESISTOR CH 1/10W 300	1	
R518		ERJ6GEYG471	M.RESISTOR CH 1/10W 470	1	
R519		ERJ6GEYJ332	M.RESISTOR CH 1/10W 3.3K	1	
R520		ERJ6GEYJ101	M.RESISTOR CH 1/10W 100	1	
R521		ERJ6GEYJ151	M.RESISTOR CH 1/10W 150	1	
R522		VRE0034E26A	M.RESISTOR CH 1/10W 182	1	
R523		ERJ6GEYJ331	M.RESISTOR CH 1/10W 330	1	
R524		VRE0034E89A	M.RESISTOR CH 1/10W 825	1	
R525		ERJ6GEYJ331	M.RESISTOR CH 1/10W 330	1	
R526,27		ERJ6GEYJ470	M.RESISTOR CH 1/10W 47	2	
R528		ERJ6GEYJ101	M.RESISTOR CH 1/10W 100	1	
R529		ERJ6GEYJ102	M.RESISTOR CH 1/10W 1K	1	
R530		ERJ6GEYJ681	M.RESISTOR CH 1/10W 680	1	
R531,32		ERJ6GEYJ273	M.RESISTOR CH 1/10W 27K	2	
R533,34		ERJ6GEYJ183	M.RESISTOR CH 1/10W 18K	2	
R535,36		ERJ6GEYJ221	M.RESISTOR CH 1/10W 220	2	
R537		ERJ6GEYG223	M.RESISTOR CH 1/10W 22K	1	
R538		ERJ6GEYJ470	M.RESISTOR CH 1/10W 47	1	
R539		ERJ6GEYG331	M.RESISTOR CH 1/10W 330	1	
R540		VRE0034E26A	M.RESISTOR CH 1/10W 182	1	
R541		VRE0034E89A	M.RESISTOR CH 1/10W 825	1	
R542		VRE0034E59A	M.RESISTOR CH 1/10W 413	1	
R543		VRE0034E102	M.RESISTOR CH 1/10W 1K	1	
R544		ERJ6GEYJ392	M.RESISTOR CH 1/10W 3.9K	1	
R545		ERJ6GEYJ222	M.RESISTOR CH 1/10W 2.2K	1	
R546		ERJ6GEYJ470	M.RESISTOR CH 1/10W 47	1	
R547		ERJ6GEYJ222	M.RESISTOR CH 1/10W 2.2K	1	
R548		ERJ6GEYJ470	M.RESISTOR CH 1/10W 47	1	
R550		ERJ6GEYJ472	M.RESISTOR CH 1/10W 4.7K	1	
R551		ERJ6GEYJ473	M.RESISTOR CH 1/10W 47K	1	
R552		ERJ6GEYJ332	M.RESISTOR CH 1/10W 3.3K	1	
R553		ERJ6GEYJ471	M.RESISTOR CH 1/10W 470	1	
R554		ERJ6GEYJ102	M.RESISTOR CH 1/10W 1K	1	
R555		ERJ6GEYJ472	M.RESISTOR CH 1/10W 4.7K	1	
R556		ERJ6GEYJ222	M.RESISTOR CH 1/10W 2.2K	1	

Refer to the P.C.BOARDS LIST, page 6-1-1, before using this page.

Ref.No.		Part No.	Part Name & Description	Pcs	Remarks
R561-63		ERJ6GEYJ473	M.RESISTOR CH 1/10W 47K	3	
R564		ERJ6GEYJ222	M.RESISTOR CH 1/10W 2.2K	1	
R565		ERJ6GEYJ223	M.RESISTOR CH 1/10W 22K	1	
R566		ERJ6GEYJ222	M.RESISTOR CH 1/10W 2.2K	1	
R567		ERJ6GEYJ223	M.RESISTOR CH 1/10W 22K	1	
R568		ERJ6GEYJ331	M.RESISTOR CH 1/10W 330	1	
R569,70		ERJ6GEYJ470	M.RESISTOR CH 1/10W 47	2	
R571		ERJ6GEYG152	M.RESISTOR CH 1/10W 1.5K	1	
R572		ERJ6GEYJ222	M.RESISTOR CH 1/10W 2.2K	1	
R573,74		ERJ6GEYJ470	M.RESISTOR CH 1/10W 47	2	
R575,76		ERJ6GEYJ222	M.RESISTOR CH 1/10W 2.2K	2	
R577		ERJ6GEYJ471	M.RESISTOR CH 1/10W 470	1	
R578		ERJ6GEYJ470	M.RESISTOR CH 1/10W 47	1	
R579		ERJ6GEYJ152	M.RESISTOR CH 1/10W 1.5K	1	
R580		ERJ6GEYJ221	M.RESISTOR CH 1/10W 220	1	
R581		ERJ6GEYJ222	M.RESISTOR CH 1/10W 2.2K	1	
R582		ERJ6GEYJ682	M.RESISTOR CH 1/10W 6.8K	1	
R583		ERJ6GEYJ182	M.RESISTOR CH 1/10W 1.8K	1	
R584		ERJ6GEYJ471	M.RESISTOR CH 1/10W 470	1	
R585		ERJ6GEYJ332	M.RESISTOR CH 1/10W 3.3K	1	
R586		ERJ6GEYJ222	M.RESISTOR CH 1/10W 2.2K	1	
R587,88		ERJ6GEYJ224	M.RESISTOR CH 1/10W 220K	2	
R589		ERJ6GEYJ103	M.RESISTOR CH 1/10W 10K	1	
R590		ERJ6GEYJ332	M.RESISTOR CH 1/10W 3.3K	1	
R591		ERJ6GEYJ471	M.RESISTOR CH 1/10W 470	1	
R592		ERJ6GEYJ332	M.RESISTOR CH 1/10W 3.3K	1	
R593		ERJ6GEYJ273	M.RESISTOR CH 1/10W 27K	1	
R594		ERJ6GEYJ562	M.RESISTOR CH 1/10W 5.6K	1	
R595,96		ERJ6GEYK475	M.RESISTOR CH 1/10W 4.7M	2	
R597		ERJ6GEYJ272	M.RESISTOR CH 1/10W 2.7K	1	
R598		ERJ6GEYJ471	M.RESISTOR CH 1/10W 470	1	
R599		ERJ6GEYJ102	M.RESISTOR CH 1/10W 1K	1	
R600		ERJ6GEYJ472	M.RESISTOR CH 1/10W 4.7K	1	
R601		ERJ6GEYJ102	M.RESISTOR CH 1/10W 1K	1	
R602		ERJ6GEYJ472	M.RESISTOR CH 1/10W 4.7K	1	
R603,04		ERJ6GEYJ474	M.RESISTOR CH 1/10W 470K	2	
R605,06		ERJ6GEYK475	M.RESISTOR CH 1/10W 4.7M	2	
R607		ERJ6GEYJ223	M.RESISTOR CH 1/10W 22K	1	
R608,09		ERJ6GEYJ472	M.RESISTOR CH 1/10W 4.7K	2	
R610		ERJ6GEYJ104	M.RESISTOR CH 1/10W 100K	1	
R611		ERJ6GEYJ472	M.RESISTOR CH 1/10W 4.7K	1	
R612		ERJ6GEYJ471	M.RESISTOR CH 1/10W 470	1	
R613		ERJ6GEYJ223	M.RESISTOR CH 1/10W 22K	1	
R614		ERJ6GEYJ224	M.RESISTOR CH 1/10W 220K	1	
R615		ERJ6GEYJ103	M.RESISTOR CH 1/10W 10K	1	
R616		ERJ6GEYJ104	M.RESISTOR CH 1/10W 100K	1	
R617-19		ERJ6GEYJ103	M.RESISTOR CH 1/10W 10K	3	
R620		ERJ6GEYJ101	M.RESISTOR CH 1/10W 100	1	
R621,22		ERJ6GEYJ474	M.RESISTOR CH 1/10W 470K	2	
R623		ERJ6GEYJ153	M.RESISTOR CH 1/10W 15K	1	
R624-26		ERJ6GEYJ103	M.RESISTOR CH 1/10W 10K	3	
R627		ERJ6GEYJ472	M.RESISTOR CH 1/10W 4.7K	1	
R628		ERJ6GEYJ223	M.RESISTOR CH 1/10W 22K	1	
R629		ERJ6GEYJ472	M.RESISTOR CH 1/10W 4.7K	1	
R630,31		ERJ6GEYJ101	M.RESISTOR CH 1/10W 100	2	
R632		ERJ6GEYJ102	M.RESISTOR CH 1/10W 1K	1	
R633		ERDS2TJ331	C.RESISTOR 1/4W 330	1	
R635,36		ERJ6GEYJ470	M.RESISTOR CH 1/10W 47	2	
R637		ERJ6GEYJ102	M.RESISTOR CH 1/10W 1K	1	
R639,40		ERJ6GEYJ331	M.RESISTOR CH 1/10W 330	2	
R643		ERJ6GEYJ331	M.RESISTOR CH 1/10W 330	1	
R644,45		ERJ6GEYJ470	M.RESISTOR CH 1/10W 47	2	
R646		ERJ6GEYJ682	M.RESISTOR CH 1/10W 6.8K	1	
R647,48		ERJ6GEYJ221	M.RESISTOR CH 1/10W 220	2	
R649		ERJ6GEYJ682	M.RESISTOR CH 1/10W 6.8K	1	
R650-53		ERJ6GEYJ101	M.RESISTOR CH 1/10W 100	4	
R654,55		ERJ6GEYJ681	M.RESISTOR CH 1/10W 680	2	
R656		ERJ6GEYJ470	M.RESISTOR CH 1/10W 47	1	
R660		ERDS2TJ331	C.RESISTOR 1/4W 330	1	
R661		ERDS2TJ472	C.RESISTOR 1/4W 4.7K	1	
R701		ERJ6GEYJ470	M.RESISTOR CH 1/10W 47	1	
R702		ERJ6GEYJ102	M.RESISTOR CH 1/10W 1K	1	
R703		ERJ6GEYJ821	M.RESISTOR CH 1/10W 820	1	
R704		ERJ6GEY0R00	M.RESISTOR CH 1/10W 0	1	
R705		ERJ6GEYJ332	M.RESISTOR CH 1/10W 3.3K	1	

Ref.No.		Part No.	Part Name & Description	Pcs	Remarks
R712		ERJ6GEYJ470	M.RESISTOR CH 1/10W 47	1	
R723,24		ERJ6GEYJ101	M.RESISTOR CH 1/10W 100	2	
R725		ERJ6GEYJ102	M.RESISTOR CH 1/10W 1K	1	
R726		ERJ6GEYJ470	M.RESISTOR CH 1/10W 47	1	
R727		ERJ6GEYG471	M.RESISTOR CH 1/10W 470	1	
R728,29		ERJ6GEYJ470	M.RESISTOR CH 1/10W 47	2	
R730		ERJ6GEYG471	M.RESISTOR CH 1/10W 470	1	
R731		ERJ6GEYJ222	M.RESISTOR CH 1/10W 2.2K	1	
R732,33		ERJ6GEYG821	M.RESISTOR CH 1/10W 820	2	
R734		ERJ6GEYJ222	M.RESISTOR CH 1/10W 2.2K	1	
R735		ERJ6GEYJ470	M.RESISTOR CH 1/10W 47	1	
R736		ERJ6GEYJ271	M.RESISTOR CH 1/10W 270	1	
R737		ERJ6GEYJ332	M.RESISTOR CH 1/10W 3.3K	1	
R738		ERJ6GEYJ821	M.RESISTOR CH 1/10W 820	1	
R739		ERJ6GEYJ470	M.RESISTOR CH 1/10W 47	1	
R740		ERJ6GEYJ222	M.RESISTOR CH 1/10W 2.2K	1	
R741		ERJ6GEYJ272	M.RESISTOR CH 1/10W 2.7K	1	
R742		ERJ6GEYG331	M.RESISTOR CH 1/10W 330	1	
R743		ERJ6GEYJ153	M.RESISTOR CH 1/10W 15K	1	
R744		ERJ6GEYJ473	M.RESISTOR CH 1/10W 47K	1	
R745,46		ERJ6GEYJ220	M.RESISTOR CH 1/10W 22	2	
R747		ERJ6GEYJ470	M.RESISTOR CH 1/10W 47	1	
R748		ERJ6GEYJ152	M.RESISTOR CH 1/10W 1.5K	1	
R749		ERJ6GEYJ331	M.RESISTOR CH 1/10W 330	1	
R750		ERJ6GEYJ102	M.RESISTOR CH 1/10W 1K	1	
R751		ERJ6GEYJ221	M.RESISTOR CH 1/10W 220	1	
R752		ERJ6GEYJ222	M.RESISTOR CH 1/10W 2.2K	1	
R753		ERJ6GEYJ472	M.RESISTOR CH 1/10W 4.7K	1	
R754		ERJ6GEYJ103	M.RESISTOR CH 1/10W 10K	1	
R755		ERJ6GEYJ472	M.RESISTOR CH 1/10W 4.7K	1	
R756		ERJ6GEYJ682	M.RESISTOR CH 1/10W 6.8K	1	
R757		ERJ6GEYJ471	M.RESISTOR CH 1/10W 470	1	
R758		ERJ6GEYJ101	M.RESISTOR CH 1/10W 100	1	
R759		ERJ6GEYJ222	M.RESISTOR CH 1/10W 2.2K	1	
R760		ERJ6GEYJ470	M.RESISTOR CH 1/10W 47	1	
R761		ERJ6GEYJ152	M.RESISTOR CH 1/10W 1.5K	1	
R762,63		ERJ6GEYG301	M.RESISTOR CH 1/10W 300	2	
R764		ERJ6GEYJ470	M.RESISTOR CH 1/10W 47	1	
R765		ERJ6GEYJ102	M.RESISTOR CH 1/10W 1K	1	
R766		ERJ6GEYJ681	M.RESISTOR CH 1/10W 680	1	
R767		ERJ6GEYJ102	M.RESISTOR CH 1/10W 1K	1	
R768		ERJ6GEYJ152	M.RESISTOR CH 1/10W 1.5K	1	
R769		ERJ6GEYJ470	M.RESISTOR CH 1/10W 47	1	
R770		ERJ6GEYJ221	M.RESISTOR CH 1/10W 220	1	
R771		ERJ6GEYJ222	M.RESISTOR CH 1/10W 2.2K	1	
R772		ERJ6GEYJ470	M.RESISTOR CH 1/10W 47	1	
R773		ERJ6GEYJ152	M.RESISTOR CH 1/10W 1.5K	1	
R774,75		ERJ6GEYJ331	M.RESISTOR CH 1/10W 330	2	
R776		ERJ6GEYJ470	M.RESISTOR CH 1/10W 47	1	
R777		ERJ6GEYJ222	M.RESISTOR CH 1/10W 2.2K	1	
R778		ERJ6GEYJ470	M.RESISTOR CH 1/10W 47	1	
R789		ERJ6GEYJ470	M.RESISTOR CH 1/10W 47	1	
R790-97		ERJ6GEYJ102	M.RESISTOR CH 1/10W 1K	8	
R798,99		ERJ6GEYJ332	M.RESISTOR CH 1/10W 3.3K	2	
R800		ERJ6GEYJ101	M.RESISTOR CH 1/10W 100	1	
R801,02		ERJ6GEYJ471	M.RESISTOR CH 1/10W 470	2	
R803		ERJ6GEYJ470	M.RESISTOR CH 1/10W 47	1	
R804,05		ERJ6GEYJ681	M.RESISTOR CH 1/10W 680	2	
R806,07		ERJ6GEYJ101	M.RESISTOR CH 1/10W 100	2	
R808		ERJ6GEYJ470	M.RESISTOR CH 1/10W 47	1	
R809		ERJ6GEYJ151	M.RESISTOR CH 1/10W 150	1	
R810,11		ERJ6GEYJ222	M.RESISTOR CH 1/10W 2.2K	2	
R812		ERJ6GEYJ470	M.RESISTOR CH 1/10W 47	1	
R813,14		ERJ6GEYJ222	M.RESISTOR CH 1/10W 2.2K	2	
R815,16		ERJ6GEYJ470	M.RESISTOR CH 1/10W 47	2	
R817-28		ERJ6GEYJ102	M.RESISTOR CH 1/10W 1K	12	
R829		ERJ6GEYJ683	M.RESISTOR CH 1/10W 68K	1	
R830,31		ERJ6GEYJ103	M.RESISTOR CH 1/10W 10K	2	
R832,33		ERJ6GEYJ150	M.RESISTOR CH 1/10W 15	2	
R834,35		ERJ6GEYJ332	M.RESISTOR CH 1/10W 3.3K	2	
R836		ERJ6GEYJ101	M.RESISTOR CH 1/10W 100	1	
R837		ERDS2TJ222	C.RESISTOR 1/4W 2.2K	1	
R838-40		ERJ6GEYJ102	M.RESISTOR CH 1/10W 1K	3	
R842		ERJ6GEYJ222	M.RESISTOR CH 1/10W 2.2K	1	
R843,44		ERJ6GEYJ471	M.RESISTOR CH 1/10W 470	2	

Refer to the P.C.BOARDS LIST, page 6-1-1, before using this page.

Ref.No.		Part No.	Part Name & Description	Pcs	Remarks
R845		ERJ6GEYJ470	M.RESISTOR CH 1/10W 47	1	
R846,47		ERJ6GEYJ333	M.RESISTOR CH 1/10W 33K	2	
R848,49		ERJ6GEYJ102	M.RESISTOR CH 1/10W 1K	2	
R850		ERJ6GEYJ222	M.RESISTOR CH 1/10W 2.2K	1	
R851		ERJ6GEYJ221	M.RESISTOR CH 1/10W 220	1	
R852		ERJ6GEYJ392	M.RESISTOR CH 1/10W 3.9K	1	
R853		ERJ6GEYJ470	M.RESISTOR CH 1/10W 47	1	
R854		ERJ6GEYJ471	M.RESISTOR CH 1/10W 470	1	
R855		ERJ6GEYJ152	M.RESISTOR CH 1/10W 1.5K	1	
R856,57		ERJ6GEYJ101	M.RESISTOR CH 1/10W 100	2	
R858		ERJ6GEYJ222	M.RESISTOR CH 1/10W 2.2K	1	
R859		ERJ6GEYJ102	M.RESISTOR CH 1/10W 1K	1	
R860		ERJ6GEYJ101	M.RESISTOR CH 1/10W 100	1	
R861		ERJ6GEYJ332	M.RESISTOR CH 1/10W 3.3K	1	
R862		ERJ6GEYJ223	M.RESISTOR CH 1/10W 22K	1	
R863		ERJ6GEYJ332	M.RESISTOR CH 1/10W 3.3K	1	
R864		ERJ6GEYJ472	M.RESISTOR CH 1/10W 4.7K	1	
R865		ERJ6GEYJ103	M.RESISTOR CH 1/10W 10K	1	
R866		ERJ6GEYJ683	M.RESISTOR CH 1/10W 68K	1	
R867		ERJ6GEYJ473	M.RESISTOR CH 1/10W 47K	1	
R868		ERJ6GEYJ471	M.RESISTOR CH 1/10W 470	1	
R870		ERJ6GEYJ471	M.RESISTOR CH 1/10W 470	1	
R871		ERJ6GEYJ221	M.RESISTOR CH 1/10W 220	1	
R872		ERJ6GEYJ392	M.RESISTOR CH 1/10W 3.9K	1	
R873		VRE0034E27B	M.RESISTOR CH 1/10W 1.87K	1	
R874		VRE0034E751	M.RESISTOR CH 1/10W 750	1	
R875		ERJ6GEYJ332	M.RESISTOR CH 1/10W 3.3K	1	
R876		ERJ6GEYJ152	M.RESISTOR CH 1/10W 1.5K	1	
R878		ERJ6GEYG301	M.RESISTOR CH 1/10W 300	1	
R879		ERJ6GEYG471	M.RESISTOR CH 1/10W 470	1	
R880		ERJ6GEYJ332	M.RESISTOR CH 1/10W 3.3K	1	
R881		ERJ6GEYJ101	M.RESISTOR CH 1/10W 100	1	
R882		ERJ6GEYJ151	M.RESISTOR CH 1/10W 150	1	
R883		VRE0034E26A	M.RESISTOR CH 1/10W 182	1	
R884		ERJ6GEYJ331	M.RESISTOR CH 1/10W 330	1	
R885		VRE0034E89A	M.RESISTOR CH 1/10W 825	1	
R886,87		ERJ6GEYJ470	M.RESISTOR CH 1/10W 47	2	
R888		ERJ6GEYJ331	M.RESISTOR CH 1/10W 330	1	
R889		ERJ6GEYJ681	M.RESISTOR CH 1/10W 680	1	
R890		ERJ6GEYJ273	M.RESISTOR CH 1/10W 27K	1	
R891		ERJ6GEYJ183	M.RESISTOR CH 1/10W 18K	1	
R892		ERJ6GEYJ221	M.RESISTOR CH 1/10W 220	1	
R893		ERJ6GEYJ273	M.RESISTOR CH 1/10W 27K	1	
R894		ERJ6GEYJ183	M.RESISTOR CH 1/10W 18K	1	
R895		ERJ6GEYJ221	M.RESISTOR CH 1/10W 220	1	
R896		ERJ6GEYG223	M.RESISTOR CH 1/10W 22K	1	
R897		ERJ6GEYJ470	M.RESISTOR CH 1/10W 47	1	
R898		VRE0034E26A	M.RESISTOR CH 1/10W 182	1	
R899		VRE0034E89A	M.RESISTOR CH 1/10W 825	1	
R900		ERJ6GEYG331	M.RESISTOR CH 1/10W 330	1	
R901		VRE0034E59A	M.RESISTOR CH 1/10W 413	1	
R902		VRE0034E102	M.RESISTOR CH 1/10W 1K	1	
R903		ERJ6GEYJ392	M.RESISTOR CH 1/10W 3.9K	1	
R904		ERJ6GEYJ470	M.RESISTOR CH 1/10W 47	1	
R905,06		ERJ6GEYJ222	M.RESISTOR CH 1/10W 2.2K	2	
R907		ERJ6GEYJ470	M.RESISTOR CH 1/10W 47	1	
R909		ERJ6GEYJ472	M.RESISTOR CH 1/10W 4.7K	1	
R910		ERJ6GEYJ473	M.RESISTOR CH 1/10W 47K	1	
R911		ERJ6GEYJ332	M.RESISTOR CH 1/10W 3.3K	1	
R912		ERJ6GEYJ471	M.RESISTOR CH 1/10W 470	1	
R913		ERJ6GEYJ102	M.RESISTOR CH 1/10W 1K	1	
R914		ERJ6GEYJ472	M.RESISTOR CH 1/10W 4.7K	1	
R915		ERJ6GEYJ222	M.RESISTOR CH 1/10W 2.2K	1	
R920		ERJ6GEYJ331	M.RESISTOR CH 1/10W 330	1	
R921,22		ERJ6GEYJ470	M.RESISTOR CH 1/10W 47	2	
R923		ERJ6GEYG152	M.RESISTOR CH 1/10W 1.5K	1	
R924		ERJ6GEYJ222	M.RESISTOR CH 1/10W 2.2K	1	
R925,26		ERJ6GEYJ470	M.RESISTOR CH 1/10W 47	2	
R927,28		ERJ6GEYJ222	M.RESISTOR CH 1/10W 2.2K	2	
R929		ERJ6GEYJ471	M.RESISTOR CH 1/10W 470	1	
R930		ERJ6GEYJ470	M.RESISTOR CH 1/10W 47	1	
R931		ERJ6GEYJ152	M.RESISTOR CH 1/10W 1.5K	1	
R932		ERJ6GEYJ221	M.RESISTOR CH 1/10W 220	1	
R933		ERJ6GEYJ222	M.RESISTOR CH 1/10W 2.2K	1	
R934		ERJ6GEYJ682	M.RESISTOR CH 1/10W 6.8K	1	

Ref.No.		Part No.	Part Name & Description	Pcs	Remarks
R935		ERJ6GEYJ182	M.RESISTOR CH 1/10W 1.8K	1	
R936		ERJ6GEYJ471	M.RESISTOR CH 1/10W 470	1	
R937,38		ERJ6GEYJ332	M.RESISTOR CH 1/10W 3.3K	2	
R939		ERJ6GEYJ471	M.RESISTOR CH 1/10W 470	1	
R940		ERJ6GEYJ103	M.RESISTOR CH 1/10W 10K	1	
R941		ERJ6GEYJ683	M.RESISTOR CH 1/10W 68K	1	
R942		ERJ6GEYJ222	M.RESISTOR CH 1/10W 2.2K	1	
R943		ERJ6GEYJ273	M.RESISTOR CH 1/10W 27K	1	
R944		ERJ6GEYJ682	M.RESISTOR CH 1/10W 6.8K	1	
R945,46		ERJ6GEYK475	M.RESISTOR CH 1/10W 4.7M	2	
R947		ERJ6GEYJ272	M.RESISTOR CH 1/10W 2.7K	1	
R948		ERJ6GEYJ471	M.RESISTOR CH 1/10W 470	1	
R949		ERJ6GEYJ102	M.RESISTOR CH 1/10W 1K	1	
R950		ERJ6GEYJ472	M.RESISTOR CH 1/10W 4.7K	1	
R951		ERJ6GEYJ102	M.RESISTOR CH 1/10W 1K	1	
R952		ERJ6GEYJ472	M.RESISTOR CH 1/10W 4.7K	1	
R953,54		ERJ6GEYJ105	M.RESISTOR CH 1/10W 1M	2	
R955,56		ERJ6GEYK475	M.RESISTOR CH 1/10W 4.7M	2	
R957,58		ERJ6GEYJ472	M.RESISTOR CH 1/10W 4.7K	2	
R959		ERJ6GEYJ471	M.RESISTOR CH 1/10W 470	1	
R960		ERJ6GEYJ153	M.RESISTOR CH 1/10W 15K	1	
R961-63		ERJ6GEYJ103	M.RESISTOR CH 1/10W 10K	3	
R964		ERJ6GEYJ101	M.RESISTOR CH 1/10W 100	1	
R965		ERJ6GEYJ102	M.RESISTOR CH 1/10W 1K	1	
R966-68		ERJ6GEYJ103	M.RESISTOR CH 1/10W 10K	3	
R969,70		ERJ6GEYJ472	M.RESISTOR CH 1/10W 4.7K	2	
R971		ERJ6GEYJ223	M.RESISTOR CH 1/10W 22K	1	
R972		ERDS2TJ331	C.RESISTOR 1/4W 330	1	
R973		ERJ6GEYJ102	M.RESISTOR CH 1/10W 1K	1	
R975,76		ERJ6GEYJ470	M.RESISTOR CH 1/10W 47	2	
R977		ERJ6GEYJ682	M.RESISTOR CH 1/10W 6.8K	1	
R978,79		ERJ6GEYJ221	M.RESISTOR CH 1/10W 220	2	
R980		ERJ6GEYJ682	M.RESISTOR CH 1/10W 6.8K	1	
R981,82		ERJ6GEYJ101	M.RESISTOR CH 1/10W 100	2	
R983,84		ERJ6GEYJ681	M.RESISTOR CH 1/10W 680	2	
R985		ERJ6GEYJ470	M.RESISTOR CH 1/10W 47	1	
R986,87		ERJ6GEYJ331	M.RESISTOR CH 1/10W 330	2	
R989		ERJ6GEYJ472	M.RESISTOR CH 1/10W 4.7K	1	
R993		ERDS2TJ331	C.RESISTOR 1/4W 330	1	
R994		ERDS2TJ472	C.RESISTOR 1/4W 4.7K	1	
SW1		VSS0126	SWITCH	1	
SW201,02		VSS0126	SWITCH	2	
SW304		VSS0126	SWITCH	1	
SW305,06		VSS0207	SWITCH	2	
SW704		VSS0126	SWITCH	1	
TP3-P8		VJR0646	TEST POINT	6	
TP201-07		VJR0646	TEST POINT	7	
TP301-04		VJR0646	TEST POINT	4	
TP307-13		VJR0646	TEST POINT	7	
TP315-17		VJR0646	TEST POINT	3	
TP701-12		VJR0646	TEST POINT	12	
TP711		VJR0400Y	TEST POINT	1	FOR VEP83098E
TPG1,G2		VJR0646	TEST POINT	2	
TPG201,02		VJR0646	TEST POINT	2	
TPG301-03		VJR0646	TEST POINT	3	
TPG701-03		VJR0646	TEST POINT	3	
VC301		ECV1ZW10X53T	V.CAPACITOR 10P	1	
VC701		ECV1ZW20X53T	V.CAPACITOR 20P	1	
VL201		EIR7QF015B	COIL	1	
VL301,02		EIR7QF016B	COIL	2	
VL303		EIR7QF015B	COIL	1	
VL701		EIR7QF016B	COIL	1	
VL702		EIR7QF015B	COIL	1	

Refer to the P.C.BOARDS LIST, page 6-1-1, before using this page.

Ref.No.		Part No.	Part Name & Description	Pcs	Remarks
VR1		VRV0064B501	V.RESISTOR 500	1	
VR3		VRV0109B202	V.RESISTOR 2K	1	
VR4		VRV0109B102	V.RESISTOR 1K	1	
VR5		VRV0109B203	V.RESISTOR 20K	1	
VR6		VRV0109B501	V.RESISTOR 500	1	
VR7		VRV0064B103	V.RESISTOR 10K	1	
VR8		VRV0109B503	V.RESISTOR 50K	1	
VR9		VRV0109B502	V.RESISTOR 5K	1	
VR10		VRV0109B503	V.RESISTOR 50K	1	
VR11		VRV0109B104	V.RESISTOR 100K	1	
VR201		VRV0064B501	V.RESISTOR 500	1	
VR202		VRV0109B203	V.RESISTOR 20K	1	
VR203		VRV0109B102	V.RESISTOR 1K	1	
VR204		VRV0109B501	V.RESISTOR 500	1	
VR205		VRV0109B503	V.RESISTOR 50K	1	
VR206		VRV0109B502	V.RESISTOR 5K	1	
VR207,08		VRV0109B503	V.RESISTOR 50K	2	
VR209		VRV0109B104	V.RESISTOR 100K	1	
VR301		VRV0109B501	V.RESISTOR 500	1	
VR302		VRV0109B102	V.RESISTOR 1K	1	
VR303		VRV0109B501	V.RESISTOR 500	1	
VR304		VRV0109B102	V.RESISTOR 1K	1	
VR309		VRV0109B101	V.RESISTOR 100	1	
VR310		VRV0109B502	V.RESISTOR 5K	1	
VR311		VRV0109B501	V.RESISTOR 500	1	
VR312		VRV0064B104	V.RESISTOR 100K	1	
VR315,16		VRV0064B502	V.RESISTOR 5K	2	
VR317		VRV0109B501	V.RESISTOR 500	1	
VR318		VRV0109B203	V.RESISTOR 20K	1	
VR319,20		VRV0109B102	V.RESISTOR 1K	2	
VR321		VRV0109B203	V.RESISTOR 20K	1	
VR322		VRV0109B102	V.RESISTOR 1K	1	
VR323		VRV0109B203	V.RESISTOR 20K	1	
VR324		VRV0109B102	V.RESISTOR 1K	1	
VR325		VRV0109B202	V.RESISTOR 2K	1	
VR326		VRV0109B102	V.RESISTOR 1K	1	
VR327		VRV0064B203	V.RESISTOR 20K	1	
VR328		VRV0109B203	V.RESISTOR 20K	1	
VR329		VRV0112B504	V.RESISTOR 500K	1	
VR331		VRV0109B103	V.RESISTOR 10K	1	
VR701,02		VRV0109B501	V.RESISTOR 500	2	
VR712,13		VRV0064B502	V.RESISTOR 5K	2	
VR714		VRV0109B501	V.RESISTOR 500	1	
VR715		VRV0109B203	V.RESISTOR 20K	1	
VR716,17		VRV0109B102	V.RESISTOR 1K	2	
VR718		VRV0109B203	V.RESISTOR 20K	1	
VR719		VRV0109B102	V.RESISTOR 1K	1	
VR720		VRV0109B203	V.RESISTOR 20K	1	
VR721		VRV0109B102	V.RESISTOR 1K	1	
VR722		VRV0109B202	V.RESISTOR 2K	1	
VR723		VRV0109B102	V.RESISTOR 1K	1	
VR724		VRV0064B203	V.RESISTOR 20K	1	
VR725		VRV0109B504	V.RESISTOR 500K	1	
VR726		VRV0109B103	V.RESISTOR 10K	1	
			MISCELLANEOUS		
		VJR0422	RUG PIN	2	FOR VEP83098E
		VML2143	CARD PULLER	1	
		VML2144	CARD PULLER	1	
		VMS4174	PIN	6	
		VMZ1547	BARRIER	1	
		VSC3056	SHIELD CASE	1	
		VXA3966	P.C.B. SHIELD PLATE	1	
		XNG26E	NUT	4	
		XYNV3+K6FR	SCREW	6	
		XYN26+C12	SCREW	4	

Ref.No.		Part No.	Part Name & Description	Pcs	Remarks

Refer to the P.C.BOARDS LIST, page 6-1-1, before using this page.

Ref.No.		Part No.	Part Name & Description	Pcs	Remarks
	■	VEP83098F	P.C.BOARD W/COMPONENT		FOR AU-63-E,B
			W3 MOD & DEMOD		
			CAPACITORS		
C62		ECUM1E104ZFN	C.CAPACITOR CH 25V 0.1U	1	
C63		ECEA1CU101	E.CAPACITOR 16V 100U	1	
C64		ECUM1E104ZFN	C.CAPACITOR CH 25V 0.1U	1	
C65		ECSF1CE106	T.CAPACITOR 16V 10U	1	
C66		ECUM1E104ZFN	C.CAPACITOR CH 25V 0.1U	1	
C67		ECSF1CE106	T.CAPACITOR 16V 10U	1	
C68		ECUM1E104ZFN	C.CAPACITOR CH 25V 0.1U	1	
C69,70		ECSF1CE106	T.CAPACITOR 16V 10U	2	
C71		ECUM1E104ZFN	C.CAPACITOR CH 25V 0.1U	1	
C72		ECEA1CU101	E.CAPACITOR 16V 100U	1	
C301,02		ECUM1H103KBN	C.CAPACITOR CH 50V 0.01U	2	
C303		ECUM1H270JCN	C.CAPACITOR CH 50V 27P	1	
C304,05		ECUM1H103KBN	C.CAPACITOR CH 50V 0.01U	2	
C306		ECUM1H270JCN	C.CAPACITOR CH 50V 27P	1	
C307		ECEA1AU101	E.CAPACITOR 10V 100U	1	
C308,09		ECUM1H103KBN	C.CAPACITOR CH 50V 0.01U	2	
C310		ECEA1AU101	E.CAPACITOR 10V 100U	1	
C311		ECUM1H103KBN	C.CAPACITOR CH 50V 0.01U	1	
C316		ECUM1E104ZFN	C.CAPACITOR CH 25V 0.1U	1	
C322		ECUM1E104ZFN	C.CAPACITOR CH 25V 0.1U	1	
C325		ECUM1E104ZFN	C.CAPACITOR CH 25V 0.1U	1	
C326		ECUM1H103KBN	C.CAPACITOR CH 50V 0.01U	1	
C327		ECUM1E104ZFN	C.CAPACITOR CH 25V 0.1U	1	
C328,29		ECUM1H103KBN	C.CAPACITOR CH 50V 0.01U	2	
C340		ECUM1H103KBN	C.CAPACITOR CH 50V 0.01U	1	
C341		ECEA1CN100S	E.CAPACITOR 16V 10U	1	
C342		ECUM1H103KBN	C.CAPACITOR CH 50V 0.01U	1	
C343		ECUM1H150JCN	C.CAPACITOR CH 50V 15P	1	
C344		ECUM1H101JCN	C.CAPACITOR CH 50V 100P	1	
C345		ECUM1H100DCN	C.CAPACITOR CH 50V 10P	1	
C346		ECUM1H103KBN	C.CAPACITOR CH 50V 0.01U	1	
C347,48		ECEA1AU101	E.CAPACITOR 10V 100U	2	
C349		ECUM1H103KBN	C.CAPACITOR CH 50V 0.01U	1	
C351		ECUM1H221JCN	C.CAPACITOR CH 50V 220P	1	
C352		ECUM1H103KBN	C.CAPACITOR CH 50V 0.01U	1	
C353		ECUM1H680JCN	C.CAPACITOR CH 50V 68P	1	
C354,55		ECUM1H103KBN	C.CAPACITOR CH 50V 0.01U	2	
C356		ECUM1E104ZFN	C.CAPACITOR CH 25V 0.1U	1	
C357		ECEA1HU2R2	E.CAPACITOR 50V 2.2U	1	
C358		ECEA1AU101	E.CAPACITOR 10V 100U	1	
C359		ECUM1H103KBN	C.CAPACITOR CH 50V 0.01U	1	
C360		ECUM1H270JCN	C.CAPACITOR CH 50V 27P	1	
C363		ECUM1E104ZFN	C.CAPACITOR CH 25V 0.1U	1	
C373		ECEA1AU101	E.CAPACITOR 10V 100U	1	
C374		ECUM1H103KBN	C.CAPACITOR CH 50V 0.01U	1	
C375		ECEA1AU101	E.CAPACITOR 10V 100U	1	
C376		ECUM1H103KBN	C.CAPACITOR CH 50V 0.01U	1	
C380		ECUM1E104ZFN	C.CAPACITOR CH 25V 0.1U	1	
C381		ECUM1H103KBN	C.CAPACITOR CH 50V 0.01U	1	
C382		ECUM1E104ZFN	C.CAPACITOR CH 25V 0.1U	1	
C383		ECEA1AU101	E.CAPACITOR 10V 100U	1	
C386		ECUM1H050DCN	C.CAPACITOR CH 50V 50P	1	
C387		ECUM1H100DCN	C.CAPACITOR CH 50V 10P	1	
C389		ECUM1H331JCN	C.CAPACITOR CH 50V 330P	1	
C391		ECUM1H470JCN	C.CAPACITOR CH 50V 47P	1	
C392		ECUM1H103KBN	C.CAPACITOR CH 50V 0.01U	1	
C393		ECEA1AU101	E.CAPACITOR 10V 100U	1	
C394		ECUM1H103KBN	C.CAPACITOR CH 50V 0.01U	1	
C395		ECUM1E104ZFN	C.CAPACITOR CH 25V 0.1U	1	
C396,97		ECUM1H103KBN	C.CAPACITOR CH 50V 0.01U	2	
C398		ECUM1H180JCN	C.CAPACITOR CH 50V 18P	1	
C399		ECUM1H103KBN	C.CAPACITOR CH 50V 0.01U	1	
C400		ECUM1E104ZFN	C.CAPACITOR CH 25V 0.1U	1	
C401-03		ECUM1H103KBN	C.CAPACITOR CH 50V 0.01U	3	

Ref.No.		Part No.	Part Name & Description	Pcs	Remarks
C404		ECEA1AU101	E.CAPACITOR 10V 100U	1	
C405-07		ECUM1E104ZFN	C.CAPACITOR CH 25V 0.1U	3	
C408,09		ECUM1H270JCN	C.CAPACITOR CH 50V 27P	2	
C410		ECEA1AU471	E.CAPACITOR 10V 470U	1	
C411		ECUM1E104ZFN	C.CAPACITOR CH 25V 0.1U	1	
C412		ECUM1H221JCN	C.CAPACITOR CH 50V 220P	1	
C413		ECEA1AU101	E.CAPACITOR 10V 100U	1	
C414		ECUM1H470JCN	C.CAPACITOR CH 50V 47P	1	
C415		ECUM1H180JCN	C.CAPACITOR CH 50V 18P	1	
C416		ECUM1H181JCN	C.CAPACITOR CH 50V 180P	1	
C417,18		ECUM1E104ZFN	C.CAPACITOR CH 25V 0.1U	2	
C419		ECUM1H331JCN	C.CAPACITOR CH 50V 330P	1	
C420		ECUM1H220JCN	C.CAPACITOR CH 50V 22P	1	
C421		ECUM1H680JCN	C.CAPACITOR CH 50V 68P	1	
C422		ECUM1H330JCN	C.CAPACITOR CH 50V 33P	1	
C423		ECEA1AU101	E.CAPACITOR 10V 100U	1	
C424		ECEA1CU100	E.CAPACITOR 16V 10U	1	
C425		ECUM1H221JCN	C.CAPACITOR CH 50V 220P	1	
C426		VCM0044	M.CAPACITOR 130P	1	
C427		VCM0023	M.CAPACITOR 379P	1	
C428		ECUM1H680JCN	C.CAPACITOR CH 50V 68P	1	
C429		ECUM1H390JCN	C.CAPACITOR CH 50V 39P	1	
C430		ECUM1H331JCN	C.CAPACITOR CH 50V 330P	1	
C431		ECUM1H270JCN	C.CAPACITOR CH 50V 27P	1	
C432		ECEA0JU221	E.CAPACITOR 6.3V 220U	1	
C433		ECUM1H050DCN	C.CAPACITOR CH 50V 50P	1	
C434		ECUM1H470JCN	C.CAPACITOR CH 50V 47P	1	
C435		ECUM1H020CCN	C.CAPACITOR CH 50V 2P	1	
C436,37		ECUM1E104ZFN	C.CAPACITOR CH 25V 0.1U	2	
C440		ECUM1H470JCN	C.CAPACITOR CH 50V 47P	1	
C442,43		ECEA1CU221	E.CAPACITOR 16V 220U	2	
C444,45		ECUM1H103KBN	C.CAPACITOR CH 50V 0.01U	2	
C446,47		VCM0027	V.CAPACITOR	2	
C448		ECEA1AU101	E.CAPACITOR 10V 100U	1	
C449		ECUM1E104ZFN	C.CAPACITOR CH 25V 0.1U	1	
C450		ECEA1AU101	E.CAPACITOR 10V 100U	1	
C451		ECEA1CU101	E.CAPACITOR 16V 100U	1	
C453		ECUM1E104ZFN	C.CAPACITOR CH 25V 0.1U	1	
C454		ECUM1H820JCN	C.CAPACITOR CH 50V 82P	1	
C455,56		ECUM1H103KBN	C.CAPACITOR CH 50V 0.01U	2	
C457,58		ECEA1AU101	E.CAPACITOR 10V 100U	2	
C459		ECUM1H151JCN	C.CAPACITOR CH 50V 150P	1	
C460		ECUM1H471JCN	C.CAPACITOR CH 50V 470P	1	
C461,62		ECEA1CU100	E.CAPACITOR 16V 10U	2	
C463		ECUM1H181JCN	C.CAPACITOR CH 50V 180P	1	
C464		ECUM1H680JCN	C.CAPACITOR CH 50V 68P	1	
C465,66		ECEA1AU101	E.CAPACITOR 10V 100U	2	
C467		ECUM1E104ZFN	C.CAPACITOR CH 25V 0.1U	1	
C468		ECUM1H103KBN	C.CAPACITOR CH 50V 0.01U	1	
C469		ECUM1H220JCN	C.CAPACITOR CH 50V 22P	1	
C470		ECCF1H330JC	C.CAPACITOR 50V 33P	1	
C471		ECCF1H060DC	C.CAPACITOR 50V 6P	1	
C701,02		ECUM1H103KBN	C.CAPACITOR CH 50V 0.01U	2	
C703		ECEA1AU101	E.CAPACITOR 10V 100U	1	
C704,05		ECUM1H103KBN	C.CAPACITOR CH 50V 0.01U	2	
C706		ECUM1H330JCN	C.CAPACITOR CH 50V 33P	1	
C714		ECUM1H103KBN	C.CAPACITOR CH 50V 0.01U	1	
C725		ECUM1H180JCN	C.CAPACITOR CH 50V 18P	1	
C726		ECUM1H103KBN	C.CAPACITOR CH 50V 0.01U	1	
C727		ECUM1E104ZFN	C.CAPACITOR CH 25V 0.1U	1	
C728		ECUM1H220JCN	C.CAPACITOR CH 50V 22P	1	
C729		ECUM1H121JCN	C.CAPACITOR CH 50V 120P	1	
C730,31		ECUM1H103KBN	C.CAPACITOR CH 50V 0.01U	2	
C732		ECUM1H101JCN	C.CAPACITOR CH 50V 100P	1	
C733		ECEA1AU101	E.CAPACITOR 10V 100U	1	
C734		ECUM1H331JCN	C.CAPACITOR CH 50V 330P	1	
C735		ECEA1AU101	E.CAPACITOR 10V 100U	1	
C736		ECUM1H103KBN	C.CAPACITOR CH 50V 0.01U	1	
C737		ECUM1H101JCN	C.CAPACITOR CH 50V 100P	1	
C738		ECUM1H103KBN	C.CAPACITOR CH 50V 0.01U	1	
C744		ECUM1E104ZFN	C.CAPACITOR CH 25V 0.1U	1	
C745		ECUM1H103KBN	C.CAPACITOR CH 50V 0.01U	1	
C746		ECUM1E104ZFN	C.CAPACITOR CH 25V 0.1U	1	
C747		ECEA1AU101	E.CAPACITOR 10V 100U	1	
C749		ECUM1H561JCN	C.CAPACITOR CH 50V 560P	1	

Refer to the P.C.BOARDS LIST, page 6-1-1, before using this page.

Ref.No.		Part No.	Part Name & Description	Pcs	Remarks
C750		ECUM1H331JCN	C.CAPACITOR CH 50V 330P	1	
C751		ECUM1H221JCN	C.CAPACITOR CH 50V 220P	1	
C752		ECUM1H561JCN	C.CAPACITOR CH 50V 560P	1	
C753		ECUM1H270JCN	C.CAPACITOR CH 50V 27P	1	
C754		ECUM1H181JCN	C.CAPACITOR CH 50V 180P	1	
C755		ECUM1H270JCN	C.CAPACITOR CH 50V 27P	1	
C756		ECUM1H101JCN	C.CAPACITOR CH 50V 100P	1	
C757		ECUM1H270JCN	C.CAPACITOR CH 50V 27P	1	
C758		ECUM1H050DCN	C.CAPACITOR CH 50V 50P	1	
C759		ECUM1E104ZFN	C.CAPACITOR CH 25V 0.1U	1	
C760		ECUM1H100DCN	C.CAPACITOR CH 50V 10P	1	
C762		ECUM1H391JCN	C.CAPACITOR CH 50V 390P	1	
C764		ECUM1H560JCN	C.CAPACITOR CH 50V 56P	1	
C765,66		ECUM1H103KBN	C.CAPACITOR CH 50V 0.01U	2	
C767		ECEA1AU101	E.CAPACITOR 10V 100U	1	
C768,69		ECUM1H103KBN	C.CAPACITOR CH 50V 0.01U	2	
C770		ECUM1H220JCN	C.CAPACITOR CH 50V 22P	1	
C771		ECUM1H681JCN	C.CAPACITOR CH 50V 680P	1	
C772		ECUM1E104ZFN	C.CAPACITOR CH 25V 0.1U	1	
C773-75		ECUM1H103KBN	C.CAPACITOR CH 50V 0.01U	3	
C776		ECUM1E104ZFN	C.CAPACITOR CH 25V 0.1U	1	
C777		ECEA1AU101	E.CAPACITOR 10V 100U	1	
C778,79		ECUM1E104ZFN	C.CAPACITOR CH 25V 0.1U	2	
C780,81		ECUM1H390JCN	C.CAPACITOR CH 50V 39P	2	
C782		ECEA1AU471	E.CAPACITOR 10V 470U	1	
C783		ECUM1E104ZFN	C.CAPACITOR CH 25V 0.1U	1	
C784		ECUM1H221JCN	C.CAPACITOR CH 50V 220P	1	
C785		ECEA1AU101	E.CAPACITOR 10V 100U	1	
C786		ECUM1H121JCN	C.CAPACITOR CH 50V 120P	1	
C787		ECUM1H100DCN	C.CAPACITOR CH 50V 10P	1	
C788		ECUM1H331JCN	C.CAPACITOR CH 50V 330P	1	
C789,90		ECUM1E104ZFN	C.CAPACITOR CH 25V 0.1U	2	
C791		ECUM1H331JCN	C.CAPACITOR CH 50V 330P	1	
C792		ECUM1H220JCN	C.CAPACITOR CH 50V 22P	1	
C793		ECUM1H680JCN	C.CAPACITOR CH 50V 68P	1	
C794		ECUM1H330JCN	C.CAPACITOR CH 50V 33P	1	
C796		ECEA1CU100	E.CAPACITOR 16V 10U	1	
C797		VCM0023	M.CAPACITOR 379P	1	
C799		ECEA0JU221	E.CAPACITOR 6.3V 220U	1	
C800		ECUM1H050DCN	C.CAPACITOR CH 50V 50P	1	
C801		ECUM1H020CCN	C.CAPACITOR CH 50V 2P	1	
C802		ECUM1H330JCN	C.CAPACITOR CH 50V 33P	1	
C803,04		ECUM1E104ZFN	C.CAPACITOR CH 25V 0.1U	2	
C805		ECUM1H470JCN	C.CAPACITOR CH 50V 47P	1	
C808		ECEA1CU221	E.CAPACITOR 16V 220U	1	
C810		ECEA1CU221	E.CAPACITOR 16V 220U	1	
C811,12		ECUM1H103KBN	C.CAPACITOR CH 50V 0.01U	2	
C813,14		VCM0027	V.CAPACITOR	2	
C815		ECEA1AU101	E.CAPACITOR 10V 100U	1	
C816		ECUM1E104ZFN	C.CAPACITOR CH 25V 0.1U	1	
C817		ECEA1AU101	E.CAPACITOR 10V 100U	1	
C818		ECUM1H220JCN	C.CAPACITOR CH 50V 22P	1	
C819		ECEA1CU101	E.CAPACITOR 16V 100U	1	
C821		ECUM1E104ZFN	C.CAPACITOR CH 25V 0.1U	1	
C822		ECUM1H101JCN	C.CAPACITOR CH 50V 100P	1	
C823,24		ECUM1H103KBN	C.CAPACITOR CH 50V 0.01U	2	
C825		ECEA1AU101	E.CAPACITOR 10V 100U	1	
C826		ECUM1H680JCN	C.CAPACITOR CH 50V 68P	1	
C827		ECUM1H100DCN	C.CAPACITOR CH 50V 10P	1	
C828		ECUM1H221JCN	C.CAPACITOR CH 50V 220P	1	
C829		ECEA1AU101	E.CAPACITOR 10V 100U	1	
C830,31		ECEA1CU100	E.CAPACITOR 16V 10U	2	
C832,33		ECEA1AU101	E.CAPACITOR 10V 100U	2	
C834		ECUM1H470JCN	C.CAPACITOR CH 50V 47P	1	
C835		ECUM1H680JCN	C.CAPACITOR CH 50V 68P	1	
C836		ECCF1H330JC	C.CAPACITOR 50V 33P	1	
C837		ECCF1H060DC	C.CAPACITOR 50V 6P	1	
D301		MA151WK	DIODE	1	
D303-05		MA151K	DIODE	3	
D306,07		MA151WK	DIODE	2	
D308-10		MA151WA	DIODE	3	
D701		MA151WK	DIODE	1	

Ref.No.		Part No.	Part Name & Description	Pcs	Remarks
D702-05		MA151K	DIODE	4	
D706		MA151WK	DIODE	1	
D707		MA151WA	DIODE	1	
DL301		VLD0190	DELAY	1	
DL701		VLD0199	DELAY	1	
FL301		VLF0545	FILTER	1	
FL302		VLF0658	FILTER	1	
FL303		VLF0712	FILTER	1	
FL701		VLF0652	FILTER	1	
IC10		AN79N09	IC	1	
IC11,12		AN79M05F	IC	2	
IC13		AN78M05F	IC	1	
IC14		AN78N05	IC	1	
IC15		AN78N09	IC	1	
IC301		AN6308S	IC	1	
IC304		AN6308S	IC	1	
IC305		AN608P	IC	1	
IC306		NJM1496M	IC	1	
IC307		UPD4053BG	IC	1	
IC309		RC082BM	IC	1	
IC311-15		10116D	IC	5	
IC316		SN74LS123NS	IC	1	
IC317		MC74HC00AF	IC	1	
IC319		NE5539D	IC	1	
IC322		NJM592M8	IC	1	
IC323		MC74HC4053F	IC	1	
IC324		RC082BM	IC	1	
IC325		TC74HC221AF	IC	1	
IC326		RC082BM	IC	1	
IC701		AN6308S	IC	1	
IC705		NJM1496M	IC	1	
IC706		UPD4053BG	IC	1	
IC708-12		10116D	IC	5	
IC716		NE5539D	IC	1	
IC719		NJM592M8	IC	1	
IC720		MC74HC4053F	IC	1	
IC721		RC082BM	IC	1	
IC722		TC74HC221AF	IC	1	
L301		VLQEL05F101K	COIL 100UH	1	
L302,03		VLQEL05S100J	COIL 10UH	2	
L304		VLQEL05F101K	COIL 100UH	1	
L308		VLQEL05S3R3J	COIL 3.3UH	1	
L309,10		VLQEL05F101K	COIL 100UH	2	
L311		VLQEL05S330J	COIL 33UH	1	
L312		VLQEL05S2R7J	COIL 2.7UH	1	
L313		VLQEL05F101K	COIL 100UH	1	
L314		VLQEL05S8R2J	COIL 8.2UH	1	
L316-18		VLQEL05F101K	COIL 100UH	3	
L320,21		VLQEL05S2R2J	COIL 2.2UH	2	
L322		VLQEL05S180J	COIL 18UH	1	
L323		VLQEL05F101K	COIL 100UH	1	
L324		VLQEL05S1R0J	COIL 1UH	1	
L325-27		VLQEL05F101K	COIL 100UH	3	
L328		VLQEL05S6R8J	COIL 6.8UH	1	
L329		VLQEL05F101K	COIL 100UH	1	
L330		VLQEL05S3R3J	COIL 3.3UH	1	
L333		VLQEL05F101K	COIL 100UH	1	
L334		VLQEL05S6R8K	COIL 6.8UH	1	
L335		VLQEL05F101K	COIL 100UH	1	
L339		VLQEL05S6R8J	COIL 6.8UH	1	
L340,41		VLQEL05F101K	COIL 100UH	2	
L342		VLQEL05S820J	COIL 82UH	1	
L343,44		VLQEL05F101K	COIL 100UH	2	

Refer to the P.C.BOARDS LIST, page 6-1-1, before using this page.

Ref.No.		Part No.	Part Name & Description	Pcs	Remarks
L701		VLQEL05F101K	COIL 100UH	1	
L702		VLQEL05S150J	COIL 15UH	1	
L709		VLQEL05S4R7J	COIL 4.7UH	1	
L710		VLQEL05F101K	COIL 100UH	1	
L711		VLQEL05S560J	COIL 56UH	1	
L712		VLQEL05F101K	COIL 100UH	1	
L713		VLQEL05S3R9J	COIL 3.9UH	1	
L715		VLQEL05F101K	COIL 100UH	1	
L716		VLQEL05S181J	COIL 180UH	1	
L717		VLQEL05S680J	COIL 68UH	1	
L718		VLQEL05S2R2J	COIL 2.2UH	1	
L719,20		VLQEL05S6R8J	COIL 6.8UH	2	
L721		VLQEL05S4R7J	COIL 4.7UH	1	
L722		VLQEL05S2R7J	COIL 2.7UH	1	
L723		VLQEL05S270J	COIL 27UH	1	
L724		VLQEL05F101K	COIL 100UH	1	
L725		VLQEL05S1R5J	COIL 1.5UH	1	
L726-28		VLQEL05F101K	COIL 100UH	3	
L729		VLQEL05S150J	COIL 15UH	1	
L731		VLQEL05F101K	COIL 100UH	1	
L732		VLQEL05S6R8K	COIL 6.8UH	1	
L733		VLQEL05F101K	COIL 100UH	1	
L737		VLQEL05S220J	COIL 22UH	1	
L738		VLQEL05S390J	COIL 39UH	1	
L739-42		VLQEL05F101K	COIL 100UH	4	
Q301-04		2SC2295	TRANSISTOR CHIP	4	(B,C)
Q309,10		2SC2295	TRANSISTOR CHIP	2	(B,C)
Q311		2SA1022-C	TRANSISTOR CHIP	1	(B,C)
Q313,14		2SC2295	TRANSISTOR CHIP	2	(B,C)
Q315		2SA1022-C	TRANSISTOR CHIP	1	(B,C)
Q316		2SC2295	TRANSISTOR CHIP	1	(B,C)
Q317,18		2SA1022-C	TRANSISTOR CHIP	2	(B,C)
Q319		IMX4	TRANSISTOR	1	
Q320		UN2113	TRANSISTOR-RESISTOR	1	
Q321		2SC2295	TRANSISTOR CHIP	1	(B,C)
Q323		IMX4	TRANSISTOR	1	
Q324		2SC2295	TRANSISTOR CHIP	1	(B,C)
Q326		2SC2295	TRANSISTOR CHIP	1	(B,C)
Q327		2SA1022-C	TRANSISTOR CHIP	1	(B,C)
Q329-38		2SC2295	TRANSISTOR CHIP	10	(B,C)
Q339,40		UN2213	TRANSISTOR-RESISTOR	2	
Q341		2SA1462	TRANSISTOR	1	
Q342,43		2SC3757	TRANSISTOR	2	(Q,R)
Q344		2SC2295	TRANSISTOR CHIP	1	(B,C)
Q345		2SA1022-C	TRANSISTOR CHIP	1	(B,C)
Q346		2SC2480	TRANSISTOR	1	
Q347		2SA1462	TRANSISTOR	1	
Q348		2SC2480	TRANSISTOR	1	
Q349,50		2SA1226	TRANSISTOR	2	
Q351		2SK374	TRANSISTOR	1	
Q352		2SC3757	TRANSISTOR	1	(Q,R)
Q353		2SA1226	TRANSISTOR	1	
Q356-61		UN2113	TRANSISTOR-RESISTOR	6	
Q362,63		2SC2295	TRANSISTOR CHIP	2	(B,C)
Q364		2SA1022-C	TRANSISTOR CHIP	1	(B,C)
Q365,66		2SA1226	TRANSISTOR	2	
Q367		2SC3757	TRANSISTOR	1	(Q,R)
Q368,69		2SC2295	TRANSISTOR CHIP	2	(B,C)
Q370,71		UN2113	TRANSISTOR-RESISTOR	2	
Q372		2SC2295	TRANSISTOR CHIP	1	(B,C)
Q373-75		UN2213	TRANSISTOR-RESISTOR	3	
Q376		2SA1462	TRANSISTOR	1	
Q377		2SA1226	TRANSISTOR	1	
Q378		2SB709	TRANSISTOR CHIP	1	(Q,R)
Q379		2SC2480	TRANSISTOR	1	
Q380,81		2SC2295	TRANSISTOR CHIP	2	(B,C)
Q382-84		2SC3757	TRANSISTOR	3	(Q,R)
Q385,86		2SC2295	TRANSISTOR CHIP	2	(B,C)
Q387		2SA1022-C	TRANSISTOR CHIP	1	(B,C)
Q388		2SD601	TRANSISTOR CHIP	1	(Q,R)
Q389		2SB709	TRANSISTOR CHIP	1	(Q,R)
Q701,02		2SA1022-C	TRANSISTOR CHIP	2	(B,C)

Ref.No.		Part No.	Part Name & Description	Pcs	Remarks
Q710,11		2SC2295	TRANSISTOR CHIP	2	(B,C)
Q712		2SA1022-C	TRANSISTOR CHIP	1	(B,C)
Q713		2SC2295	TRANSISTOR CHIP	1	(B,C)
Q714,15		2SA1022-C	TRANSISTOR CHIP	2	(B,C)
Q716		2SC2295	TRANSISTOR CHIP	1	(B,C)
Q718		2SC2295	TRANSISTOR CHIP	1	(B,C)
Q719		2SA1022-C	TRANSISTOR CHIP	1	(B,C)
Q721-30		2SC2295	TRANSISTOR CHIP	10	(B,C)
Q731		UN2213	TRANSISTOR-RESISTOR	1	
Q732		2SA1462	TRANSISTOR	1	
Q733		2SC2295	TRANSISTOR CHIP	1	(B,C)
Q734		2SA1022-C	TRANSISTOR CHIP	1	(B,C)
Q735		2SC2480	TRANSISTOR	1	
Q736		2SA1462	TRANSISTOR	1	
Q737		2SC2480	TRANSISTOR	1	
Q738,39		2SA1226	TRANSISTOR	2	
Q740		2SK374	TRANSISTOR	1	
Q741		2SC3757	TRANSISTOR	1	(Q,R)
Q742		2SA1226	TRANSISTOR	1	
Q745,46		2SC2295	TRANSISTOR CHIP	2	(B,C)
Q747		2SA1022-C	TRANSISTOR CHIP	1	(B,C)
Q748,49		2SA1226	TRANSISTOR	2	
Q750		2SC3757	TRANSISTOR	1	(Q,R)
Q751		2SC2295	TRANSISTOR CHIP	1	(B,C)
Q753		2SC2295	TRANSISTOR CHIP	1	(B,C)
Q754		2SA1462	TRANSISTOR	1	
Q755		2SA1226	TRANSISTOR	1	
Q756		2SB709	TRANSISTOR CHIP	1	(Q,R)
Q757		2SC2480	TRANSISTOR	1	
Q758-60		2SC3757	TRANSISTOR	3	(Q,R)
Q761		2SC2295	TRANSISTOR CHIP	1	(B,C)
Q762		2SA1022-C	TRANSISTOR CHIP	1	(B,C)
Q763		2SD601	TRANSISTOR CHIP	1	(Q,R)
Q764		2SB709	TRANSISTOR CHIP	1	(Q,R)
			RESISTORS		
R20		ERJ6GEYJ472	M.RESISTOR CH 1/10W 4.7K	1	
R101		ERJ6GEYJ470	M.RESISTOR CH 1/10W 47	1	
R301		ERJ6GEYJ470	M.RESISTOR CH 1/10W 47	1	
R302		ERJ6GEYJ681	M.RESISTOR CH 1/10W 680	1	
R303		ERJ6GEYJ102	M.RESISTOR CH 1/10W 1K	1	
R304		ERJ6GEYJ332	M.RESISTOR CH 1/10W 3.3K	1	
R305		ERJ6GEYJ470	M.RESISTOR CH 1/10W 47	1	
R306		ERJ6GEYJ681	M.RESISTOR CH 1/10W 680	1	
R307		ERJ6GEYJ102	M.RESISTOR CH 1/10W 1K	1	
R308		ERJ6GEYJ332	M.RESISTOR CH 1/10W 3.3K	1	
R309		ERJ6GEYJ222	M.RESISTOR CH 1/10W 2.2K	1	
R310		ERJ6GEYJ470	M.RESISTOR CH 1/10W 47	1	
R322		ERJ6GEYJ470	M.RESISTOR CH 1/10W 47	1	
R323		ERJ6GEYJ152	M.RESISTOR CH 1/10W 1.5K	1	
R324		ERJ6GEYJ470	M.RESISTOR CH 1/10W 47	1	
R325,26		ERJ6GEYJ102	M.RESISTOR CH 1/10W 1K	2	
R327		ERJ6GEYJ103	M.RESISTOR CH 1/10W 10K	1	
R328		ERJ6GEYJ105	M.RESISTOR CH 1/10W 1M	1	
R329		ERJ6GEYJ224	M.RESISTOR CH 1/10W 220K	1	
R330		ERJ6GEYJ473	M.RESISTOR CH 1/10W 47K	1	
R331		ERJ6GEYJ223	M.RESISTOR CH 1/10W 22K	1	
R332		ERJ6GEYJ152	M.RESISTOR CH 1/10W 1.5K	1	
R333,34		ERJ6GEYG471	M.RESISTOR CH 1/10W 470	2	
R335,36		ERJ6GEYJ470	M.RESISTOR CH 1/10W 47	2	
R337,38		ERJ6GEYJ222	M.RESISTOR CH 1/10W 2.2K	2	
R339,40		ERJ6GEYJ271	M.RESISTOR CH 1/10W 270	2	
R341		ERJ6GEYJ470	M.RESISTOR CH 1/10W 47	1	
R342		ERJ6GEYJ271	M.RESISTOR CH 1/10W 270	1	
R343		ERJ6GEYJ821	M.RESISTOR CH 1/10W 820	1	
R344		ERJ6GEYJ470	M.RESISTOR CH 1/10W 47	1	
R345		ERJ6GEYJ222	M.RESISTOR CH 1/10W 2.2K	1	
R346		ERJ6GEYJ102	M.RESISTOR CH 1/10W 1K	1	
R347		ERJ6GEYG331	M.RESISTOR CH 1/10W 330	1	
R348		ERJ6GEYJ153	M.RESISTOR CH 1/10W 15K	1	
R349		ERJ6GEYJ223	M.RESISTOR CH 1/10W 22K	1	
R350,51		ERJ6GEYJ220	M.RESISTOR CH 1/10W 22	2	
R352		ERJ6GEYJ470	M.RESISTOR CH 1/10W 47	1	

Refer to the P.C.BOARDS LIST, page 6-1-1, before using this page.

Ref.No.		Part No.	Part Name & Description	Pcs	Remarks
R353		ERJ6GEYJ152	M.RESISTOR CH 1/10W 1.5K	1	
R354		ERJ6GEYJ471	M.RESISTOR CH 1/10W 470	1	
R355		ERJ6GEYJ102	M.RESISTOR CH 1/10W 1K	1	
R356		ERJ6GEYJ221	M.RESISTOR CH 1/10W 220	1	
R357		ERJ6GEYJ222	M.RESISTOR CH 1/10W 2.2K	1	
R358		ERJ6GEYJ101	M.RESISTOR CH 1/10W 100	1	
R359		ERJ6GEYJ472	M.RESISTOR CH 1/10W 4.7K	1	
R360,61		ERJ6GEYJ473	M.RESISTOR CH 1/10W 47K	2	
R362		ERJ6GEYJ472	M.RESISTOR CH 1/10W 4.7K	1	
R363		ERJ6GEYJ223	M.RESISTOR CH 1/10W 22K	1	
R364		ERJ6GEYJ273	M.RESISTOR CH 1/10W 27K	1	
R365		ERJ6GEYJ473	M.RESISTOR CH 1/10W 47K	1	
R366		ERJ6GEYJ223	M.RESISTOR CH 1/10W 22K	1	
R367		ERJ6GEYJ104	M.RESISTOR CH 1/10W 100K	1	
R368		ERJ6GEYJ472	M.RESISTOR CH 1/10W 4.7K	1	
R369		ERJ6GEYJ103	M.RESISTOR CH 1/10W 10K	1	
R370		ERJ6GEYJ223	M.RESISTOR CH 1/10W 22K	1	
R371		ERJ6GEYJ682	M.RESISTOR CH 1/10W 6.8K	1	
R372		ERJ6GEYJ470	M.RESISTOR CH 1/10W 47	1	
R373		ERJ6GEYJ681	M.RESISTOR CH 1/10W 680	1	
R374		ERJ6GEYJ151	M.RESISTOR CH 1/10W 150	1	
R375		ERJ6GEYJ470	M.RESISTOR CH 1/10W 47	1	
R386		ERJ6GEYJ103	M.RESISTOR CH 1/10W 10K	1	
R387,88		ERJ6GEYJ473	M.RESISTOR CH 1/10W 47K	2	
R389		ERJ6GEYJ103	M.RESISTOR CH 1/10W 10K	1	
R390		ERJ6GEYJ472	M.RESISTOR CH 1/10W 4.7K	1	
R391		ERJ6GEYJ474	M.RESISTOR CH 1/10W 470K	1	
R392		ERJ6GEYJ473	M.RESISTOR CH 1/10W 47K	1	
R393		ERJ6GEYJ471	M.RESISTOR CH 1/10W 470	1	
R397		ERJ6GEYJ470	M.RESISTOR CH 1/10W 47	1	
R398		ERJ6GEYJ152	M.RESISTOR CH 1/10W 1.5K	1	
R399,00		ERJ6GEYG301	M.RESISTOR CH 1/10W 300	2	
R401		ERJ6GEYJ470	M.RESISTOR CH 1/10W 47	1	
R402		ERJ6GEYJ102	M.RESISTOR CH 1/10W 1K	1	
R403		ERJ6GEYJ681	M.RESISTOR CH 1/10W 680	1	
R404		ERJ6GEYJ102	M.RESISTOR CH 1/10W 1K	1	
R405		ERJ6GEYJ152	M.RESISTOR CH 1/10W 1.5K	1	
R406		ERJ6GEYJ470	M.RESISTOR CH 1/10W 47	1	
R407		ERJ6GEYJ221	M.RESISTOR CH 1/10W 220	1	
R408		ERJ6GEYJ222	M.RESISTOR CH 1/10W 2.2K	1	
R409		ERJ6GEYJ470	M.RESISTOR CH 1/10W 47	1	
R410		ERJ6GEYJ152	M.RESISTOR CH 1/10W 1.5K	1	
R411,12		ERJ6GEYJ331	M.RESISTOR CH 1/10W 330	2	
R413		ERJ6GEYJ470	M.RESISTOR CH 1/10W 47	1	
R414		ERJ6GEYJ222	M.RESISTOR CH 1/10W 2.2K	1	
R415		ERJ6GEYJ470	M.RESISTOR CH 1/10W 47	1	
R426		ERJ6GEYJ470	M.RESISTOR CH 1/10W 47	1	
R427-34		ERJ6GEYJ102	M.RESISTOR CH 1/10W 1K	8	
R435,36		ERJ6GEYJ332	M.RESISTOR CH 1/10W 3.3K	2	
R437		ERJ6GEYJ101	M.RESISTOR CH 1/10W 100	1	
R438,39		ERJ6GEYJ471	M.RESISTOR CH 1/10W 470	2	
R440		ERJ6GEYJ470	M.RESISTOR CH 1/10W 47	1	
R441,42		ERJ6GEYJ681	M.RESISTOR CH 1/10W 680	2	
R443,44		ERJ6GEYJ101	M.RESISTOR CH 1/10W 100	2	
R445		ERJ6GEYJ470	M.RESISTOR CH 1/10W 47	1	
R446		ERJ6GEYJ151	M.RESISTOR CH 1/10W 150	1	
R447,48		ERJ6GEYJ222	M.RESISTOR CH 1/10W 2.2K	2	
R449		ERJ6GEYJ470	M.RESISTOR CH 1/10W 47	1	
R450,51		ERJ6GEYJ222	M.RESISTOR CH 1/10W 2.2K	2	
R452,53		ERJ6GEYJ470	M.RESISTOR CH 1/10W 47	2	
R454-65		ERJ6GEYJ102	M.RESISTOR CH 1/10W 1K	12	
R466		ERJ6GEYJ683	M.RESISTOR CH 1/10W 68K	1	
R467,68		ERJ6GEYJ103	M.RESISTOR CH 1/10W 10K	2	
R469,70		ERJ6GEYJ150	M.RESISTOR CH 1/10W 15	2	
R471,72		ERJ6GEYJ332	M.RESISTOR CH 1/10W 3.3K	2	
R473		ERJ6GEYJ101	M.RESISTOR CH 1/10W 100	1	
R474		ERDS2TJ222	C.RESISTOR 1/4W 2.2K	1	
R475		ERJ6GEYJ102	M.RESISTOR CH 1/10W 1K	1	
R477		ERJ6GEYJ471	M.RESISTOR CH 1/10W 470	1	
R478		ERJ6GEYJ102	M.RESISTOR CH 1/10W 1K	1	
R479		ERJ6GEYJ222	M.RESISTOR CH 1/10W 2.2K	1	
R480,81		ERJ6GEYJ471	M.RESISTOR CH 1/10W 470	2	
R482		ERJ6GEYJ470	M.RESISTOR CH 1/10W 47	1	
R483,84		ERJ6GEYJ333	M.RESISTOR CH 1/10W 33K	2	
R485,86		ERJ6GEYJ102	M.RESISTOR CH 1/10W 1K	2	

Ref.No.		Part No.	Part Name & Description	Pcs	Remarks
R487		ERJ6GEYJ222	M.RESISTOR CH 1/10W 2.2K	1	
R488		ERJ6GEYJ221	M.RESISTOR CH 1/10W 220	1	
R489		ERJ6GEYJ392	M.RESISTOR CH 1/10W 3.9K	1	
R490		ERJ6GEYJ470	M.RESISTOR CH 1/10W 47	1	
R491		ERJ6GEYJ333	M.RESISTOR CH 1/10W 33K	1	
R492		ERJ6GEYJ471	M.RESISTOR CH 1/10W 470	1	
R493		ERJ6GEYJ152	M.RESISTOR CH 1/10W 1.5K	1	
R494,95		ERJ6GEYJ101	M.RESISTOR CH 1/10W 100	2	
R496		ERJ6GEYJ222	M.RESISTOR CH 1/10W 2.2K	1	
R497		ERJ6GEYJ102	M.RESISTOR CH 1/10W 1K	1	
R498		ERJ6GEYJ101	M.RESISTOR CH 1/10W 100	1	
R499		ERJ6GEYJ332	M.RESISTOR CH 1/10W 3.3K	1	
R500		ERJ6GEYJ223	M.RESISTOR CH 1/10W 22K	1	
R501		ERJ6GEYJ332	M.RESISTOR CH 1/10W 3.3K	1	
R502		ERJ6GEYJ472	M.RESISTOR CH 1/10W 4.7K	1	
R503		ERJ6GEYJ103	M.RESISTOR CH 1/10W 10K	1	
R504		ERJ6GEYJ683	M.RESISTOR CH 1/10W 68K	1	
R505,06		ERJ6GEYJ473	M.RESISTOR CH 1/10W 47K	2	
R508		ERJ6GEYJ471	M.RESISTOR CH 1/10W 470	1	
R509		ERJ6GEYJ221	M.RESISTOR CH 1/10W 220	1	
R510		ERJ6GEYJ392	M.RESISTOR CH 1/10W 3.9K	1	
R511		VRE0034E27B	M.RESISTOR CH 1/10W 1.87K	1	
R512		VRE0034E751	M.RESISTOR CH 1/10W 750	1	
R513		ERJ6GEYJ332	M.RESISTOR CH 1/10W 3.3K	1	
R514		ERJ6GEYJ152	M.RESISTOR CH 1/10W 1.5K	1	
R515		ERJ6GEYJ682	M.RESISTOR CH 1/10W 6.8K	1	
R516		ERJ6GEYG301	M.RESISTOR CH 1/10W 300	1	
R518		ERJ6GEYG471	M.RESISTOR CH 1/10W 470	1	
R519		ERJ6GEYJ332	M.RESISTOR CH 1/10W 3.3K	1	
R520		ERJ6GEYJ101	M.RESISTOR CH 1/10W 100	1	
R521		ERJ6GEYJ151	M.RESISTOR CH 1/10W 150	1	
R522		VRE0034E26A	M.RESISTOR CH 1/10W 182	1	
R523		ERJ6GEYJ331	M.RESISTOR CH 1/10W 330	1	
R524		VRE0034E89A	M.RESISTOR CH 1/10W 825	1	
R525		ERJ6GEYG331	M.RESISTOR CH 1/10W 330	1	
R526,27		ERJ6GEYJ470	M.RESISTOR CH 1/10W 47	2	
R528		ERJ6GEYJ101	M.RESISTOR CH 1/10W 100	1	
R529		ERJ6GEYJ102	M.RESISTOR CH 1/10W 1K	1	
R530		ERJ6GEYJ681	M.RESISTOR CH 1/10W 680	1	
R531,32		ERJ6GEYJ273	M.RESISTOR CH 1/10W 27K	2	
R533,34		ERJ6GEYJ183	M.RESISTOR CH 1/10W 18K	2	
R535,36		ERJ6GEYJ221	M.RESISTOR CH 1/10W 220	2	
R537		ERJ6GEYG223	M.RESISTOR CH 1/10W 22K	1	
R538		ERJ6GEYJ470	M.RESISTOR CH 1/10W 47	1	
R539		ERJ6GEYG331	M.RESISTOR CH 1/10W 330	1	
R540		VRE0034E26A	M.RESISTOR CH 1/10W 182	1	
R541		VRE0034E89A	M.RESISTOR CH 1/10W 825	1	
R542		VRE0034E59A	M.RESISTOR CH 1/10W 413	1	
R543		VRE0034E102	M.RESISTOR CH 1/10W 1K	1	
R544		ERJ6GEYJ392	M.RESISTOR CH 1/10W 3.9K	1	
R545		ERJ6GEYJ222	M.RESISTOR CH 1/10W 2.2K	1	
R546		ERJ6GEYJ470	M.RESISTOR CH 1/10W 47	1	
R547		ERJ6GEYJ222	M.RESISTOR CH 1/10W 2.2K	1	
R548		ERJ6GEYJ470	M.RESISTOR CH 1/10W 47	1	
R550		ERJ6GEYJ472	M.RESISTOR CH 1/10W 4.7K	1	
R551		ERJ6GEYJ473	M.RESISTOR CH 1/10W 47K	1	
R552		ERJ6GEYJ332	M.RESISTOR CH 1/10W 3.3K	1	
R553		ERJ6GEYJ471	M.RESISTOR CH 1/10W 470	1	
R554		ERJ6GEYJ102	M.RESISTOR CH 1/10W 1K	1	
R555		ERJ6GEYJ472	M.RESISTOR CH 1/10W 4.7K	1	
R556		ERJ6GEYJ222	M.RESISTOR CH 1/10W 2.2K	1	
R561-63		ERJ6GEYJ473	M.RESISTOR CH 1/10W 47K	3	
R564		ERJ6GEYJ222	M.RESISTOR CH 1/10W 2.2K	1	
R565		ERJ6GEYJ223	M.RESISTOR CH 1/10W 22K	1	
R566		ERJ6GEYJ222	M.RESISTOR CH 1/10W 2.2K	1	
R567		ERJ6GEYJ223	M.RESISTOR CH 1/10W 22K	1	
R568		ERJ6GEYJ331	M.RESISTOR CH 1/10W 330	1	
R569,70		ERJ6GEYJ470	M.RESISTOR CH 1/10W 47	2	
R571		ERJ6GEYJ152	M.RESISTOR CH 1/10W 1.5K	1	
R572		ERJ6GEYJ222	M.RESISTOR CH 1/10W 2.2K	1	
R573,74		ERJ6GEYJ470	M.RESISTOR CH 1/10W 47	2	
R575,76		ERJ6GEYJ222	M.RESISTOR CH 1/10W 2.2K	2	
R577		ERJ6GEYJ471	M.RESISTOR CH 1/10W 470	1	
R578		ERJ6GEYJ470	M.RESISTOR CH 1/10W 47	1	
R579		ERJ6GEYJ152	M.RESISTOR CH 1/10W 1.5K	1	

Refer to the P.C.BOARDS LIST, page 6-1-1, before using this page.

Ref.No.		Part No.	Part Name & Description	Pcs	Remarks
R580		ERJ6GEYJ221	M.RESISTOR CH 1/10W 220	1	
R581		ERJ6GEYJ222	M.RESISTOR CH 1/10W 2.2K	1	
R582		ERJ6GEYJ682	M.RESISTOR CH 1/10W 6.8K	1	
R583		ERJ6GEYJ182	M.RESISTOR CH 1/10W 1.8K	1	
R584		ERJ6GEYJ471	M.RESISTOR CH 1/10W 470	1	
R585		ERJ6GEYJ332	M.RESISTOR CH 1/10W 3.3K	1	
R586		ERJ6GEYJ222	M.RESISTOR CH 1/10W 2.2K	1	
R587,88		ERJ6GEYJ224	M.RESISTOR CH 1/10W 220K	2	
R589		ERJ6GEYJ103	M.RESISTOR CH 1/10W 10K	1	
R590		ERJ6GEYJ332	M.RESISTOR CH 1/10W 3.3K	1	
R591		ERJ6GEYJ471	M.RESISTOR CH 1/10W 470	1	
R592		ERJ6GEYJ332	M.RESISTOR CH 1/10W 3.3K	1	
R593		ERJ6GEYJ273	M.RESISTOR CH 1/10W 27K	1	
R594		ERJ6GEYJ562	M.RESISTOR CH 1/10W 5.6K	1	
R595,96		ERJ6GEYK475	M.RESISTOR CH 1/10W 4.7M	2	
R597		ERJ6GEYJ272	M.RESISTOR CH 1/10W 2.7K	1	
R598		ERJ6GEYJ471	M.RESISTOR CH 1/10W 470	1	
R599		ERJ6GEYJ102	M.RESISTOR CH 1/10W 1K	1	
R600		ERJ6GEYJ472	M.RESISTOR CH 1/10W 4.7K	1	
R601		ERJ6GEYJ102	M.RESISTOR CH 1/10W 1K	1	
R602		ERJ6GEYJ472	M.RESISTOR CH 1/10W 4.7K	1	
R603,04		ERJ6GEYJ474	M.RESISTOR CH 1/10W 470K	2	
R605,06		ERJ6GEYK475	M.RESISTOR CH 1/10W 4.7M	2	
R607		ERJ6GEYJ223	M.RESISTOR CH 1/10W 22K	1	
R608,09		ERJ6GEYJ472	M.RESISTOR CH 1/10W 4.7K	2	
R610		ERJ6GEYJ104	M.RESISTOR CH 1/10W 100K	1	
R611		ERJ6GEYJ472	M.RESISTOR CH 1/10W 4.7K	1	
R612		ERJ6GEYJ471	M.RESISTOR CH 1/10W 470	1	
R613		ERJ6GEYJ223	M.RESISTOR CH 1/10W 22K	1	
R614		ERJ6GEYJ224	M.RESISTOR CH 1/10W 220K	1	
R615		ERJ6GEYJ103	M.RESISTOR CH 1/10W 10K	1	
R616		ERJ6GEYJ104	M.RESISTOR CH 1/10W 100K	1	
R617-19		ERJ6GEYJ103	M.RESISTOR CH 1/10W 10K	3	
R620		ERJ6GEYJ101	M.RESISTOR CH 1/10W 100	1	
R621,22		ERJ6GEYJ474	M.RESISTOR CH 1/10W 470K	2	
R623		ERJ6GEYJ153	M.RESISTOR CH 1/10W 15K	1	
R624-26		ERJ6GEYJ103	M.RESISTOR CH 1/10W 10K	3	
R627		ERJ6GEYJ472	M.RESISTOR CH 1/10W 4.7K	1	
R628		ERJ6GEYJ223	M.RESISTOR CH 1/10W 22K	1	
R629		ERJ6GEYJ472	M.RESISTOR CH 1/10W 4.7K	1	
R630,31		ERJ6GEYJ101	M.RESISTOR CH 1/10W 100	2	
R632		ERJ6GEYJ102	M.RESISTOR CH 1/10W 1K	1	
R633		ERDS2TJ331	C.RESISTOR 1/4W 330	1	
R635,36		ERJ6GEYJ470	M.RESISTOR CH 1/10W 47	2	
R637		ERJ6GEYJ102	M.RESISTOR CH 1/10W 1K	1	
R638		ERJ6GEY0R00	M.RESISTOR CH 1/10W 0	1	
R639,40		ERJ6GEYJ331	M.RESISTOR CH 1/10W 330	2	
R643		ERJ6GEYJ331	M.RESISTOR CH 1/10W 330	1	
R644,45		ERJ6GEYJ470	M.RESISTOR CH 1/10W 47	2	
R646		ERJ6GEYJ682	M.RESISTOR CH 1/10W 6.8K	1	
R647,48		ERJ6GEYJ221	M.RESISTOR CH 1/10W 220	2	
R649		ERJ6GEYJ682	M.RESISTOR CH 1/10W 6.8K	1	
R650-53		ERJ6GEYJ101	M.RESISTOR CH 1/10W 100	4	
R654,55		ERJ6GEYJ681	M.RESISTOR CH 1/10W 680	2	
R656		ERJ6GEYJ470	M.RESISTOR CH 1/10W 47	1	
R657		ERJ6GEY0R00	M.RESISTOR CH 1/10W 0	1	
R660		ERDS2TJ331	C.RESISTOR 1/4W 330	1	
R661		ERDS2TJ472	C.RESISTOR 1/4W 4.7K	1	
R701		ERJ6GEYJ470	M.RESISTOR CH 1/10W 47	1	
R702		ERJ6GEYJ102	M.RESISTOR CH 1/10W 1K	1	
R703		ERJ6GEYJ821	M.RESISTOR CH 1/10W 820	1	
R704		ERJ6GEY0R00	M.RESISTOR CH 1/10W 0	1	
R705		ERJ6GEYJ332	M.RESISTOR CH 1/10W 3.3K	1	
R711,12		ERJ6GEYJ470	M.RESISTOR CH 1/10W 47	2	
R723,24		ERJ6GEYJ101	M.RESISTOR CH 1/10W 100	2	
R725		ERJ6GEYJ102	M.RESISTOR CH 1/10W 1K	1	
R726		ERJ6GEYJ470	M.RESISTOR CH 1/10W 47	1	
R727		ERJ6GEYG471	M.RESISTOR CH 1/10W 470	1	
R728,29		ERJ6GEYJ470	M.RESISTOR CH 1/10W 47	2	
R730		ERJ6GEYG471	M.RESISTOR CH 1/10W 470	1	
R731		ERJ6GEYJ222	M.RESISTOR CH 1/10W 2.2K	1	
R732,33		ERJ6GEYG821	M.RESISTOR CH 1/10W 820	2	
R734		ERJ6GEYJ222	M.RESISTOR CH 1/10W 2.2K	1	
R735		ERJ6GEYJ470	M.RESISTOR CH 1/10W 47	1	
R736		ERJ6GEYJ271	M.RESISTOR CH 1/10W 270	1	

Ref.No.		Part No.	Part Name & Description	Pcs	Remarks
R737		ERJ6GEYJ332	M.RESISTOR CH 1/10W 3.3K	1	
R738		ERJ6GEYJ821	M.RESISTOR CH 1/10W 820	1	
R739		ERJ6GEYJ470	M.RESISTOR CH 1/10W 47	1	
R740		ERJ6GEYJ222	M.RESISTOR CH 1/10W 2.2K	1	
R741		ERJ6GEYJ272	M.RESISTOR CH 1/10W 2.7K	1	
R742		ERJ6GEYG331	M.RESISTOR CH 1/10W 330	1	
R743		ERJ6GEYJ153	M.RESISTOR CH 1/10W 15K	1	
R744		ERJ6GEYJ473	M.RESISTOR CH 1/10W 47K	1	
R745,46		ERJ6GEYJ220	M.RESISTOR CH 1/10W 22	2	
R747		ERJ6GEYJ470	M.RESISTOR CH 1/10W 47	1	
R748		ERJ6GEYJ152	M.RESISTOR CH 1/10W 1.5K	1	
R749		ERJ6GEYJ331	M.RESISTOR CH 1/10W 330	1	
R750		ERJ6GEYJ102	M.RESISTOR CH 1/10W 1K	1	
R751		ERJ6GEYJ221	M.RESISTOR CH 1/10W 220	1	
R752		ERJ6GEYJ222	M.RESISTOR CH 1/10W 2.2K	1	
R753		ERJ6GEYJ472	M.RESISTOR CH 1/10W 4.7K	1	
R754		ERJ6GEYJ103	M.RESISTOR CH 1/10W 10K	1	
R755		ERJ6GEYJ472	M.RESISTOR CH 1/10W 4.7K	1	
R756		ERJ6GEYJ682	M.RESISTOR CH 1/10W 6.8K	1	
R760		ERJ6GEYJ470	M.RESISTOR CH 1/10W 47	1	
R761		ERJ6GEYJ152	M.RESISTOR CH 1/10W 1.5K	1	
R762,63		ERJ6GEYG301	M.RESISTOR CH 1/10W 300	2	
R764		ERJ6GEYJ470	M.RESISTOR CH 1/10W 47	1	
R765		ERJ6GEYJ102	M.RESISTOR CH 1/10W 1K	1	
R766		ERJ6GEYJ681	M.RESISTOR CH 1/10W 680	1	
R767		ERJ6GEYJ102	M.RESISTOR CH 1/10W 1K	1	
R768		ERJ6GEYJ152	M.RESISTOR CH 1/10W 1.5K	1	
R769		ERJ6GEYJ470	M.RESISTOR CH 1/10W 47	1	
R770		ERJ6GEYJ221	M.RESISTOR CH 1/10W 220	1	
R771		ERJ6GEYJ222	M.RESISTOR CH 1/10W 2.2K	1	
R772		ERJ6GEYJ470	M.RESISTOR CH 1/10W 47	1	
R773		ERJ6GEYJ152	M.RESISTOR CH 1/10W 1.5K	1	
R774,75		ERJ6GEYJ331	M.RESISTOR CH 1/10W 330	2	
R776		ERJ6GEYJ470	M.RESISTOR CH 1/10W 47	1	
R777		ERJ6GEYJ222	M.RESISTOR CH 1/10W 2.2K	1	
R778		ERJ6GEYJ470	M.RESISTOR CH 1/10W 47	1	
R789		ERJ6GEYJ470	M.RESISTOR CH 1/10W 47	1	
R790-97		ERJ6GEYJ102	M.RESISTOR CH 1/10W 1K	8	
R798,99		ERJ6GEYJ332	M.RESISTOR CH 1/10W 3.3K	2	
R800		ERJ6GEYJ101	M.RESISTOR CH 1/10W 100	1	
R801,02		ERJ6GEYJ471	M.RESISTOR CH 1/10W 470	2	
R803		ERJ6GEYJ470	M.RESISTOR CH 1/10W 47	1	
R804,05		ERJ6GEYJ681	M.RESISTOR CH 1/10W 680	2	
R806,07		ERJ6GEYJ101	M.RESISTOR CH 1/10W 100	2	
R808		ERJ6GEYJ470	M.RESISTOR CH 1/10W 47	1	
R809		ERJ6GEYJ151	M.RESISTOR CH 1/10W 150	1	
R810,11		ERJ6GEYJ222	M.RESISTOR CH 1/10W 2.2K	2	
R812		ERJ6GEYJ470	M.RESISTOR CH 1/10W 47	1	
R813,14		ERJ6GEYJ222	M.RESISTOR CH 1/10W 2.2K	2	
R815,16		ERJ6GEYJ470	M.RESISTOR CH 1/10W 47	2	
R817-28		ERJ6GEYJ102	M.RESISTOR CH 1/10W 1K	12	
R829		ERJ6GEYJ683	M.RESISTOR CH 1/10W 68K	1	
R830,31		ERJ6GEYJ103	M.RESISTOR CH 1/10W 10K	2	
R832,33		ERJ6GEYJ150	M.RESISTOR CH 1/10W 15	2	
R834,35		ERJ6GEYJ332	M.RESISTOR CH 1/10W 3.3K	2	
R836		ERJ6GEYJ101	M.RESISTOR CH 1/10W 100	1	
R837		ERDS2TJ222	C.RESISTOR 1/4W 2.2K	1	
R838-40		ERJ6GEYJ102	M.RESISTOR CH 1/10W 1K	3	
R842		ERJ6GEYJ222	M.RESISTOR CH 1/10W 2.2K	1	
R843,44		ERJ6GEYJ471	M.RESISTOR CH 1/10W 470	2	
R845		ERJ6GEYJ470	M.RESISTOR CH 1/10W 47	1	
R846,47		ERJ6GEYJ333	M.RESISTOR CH 1/10W 33K	2	
R848,49		ERJ6GEYJ102	M.RESISTOR CH 1/10W 1K	2	
R850		ERJ6GEYJ222	M.RESISTOR CH 1/10W 2.2K	1	
R851		ERJ6GEYJ221	M.RESISTOR CH 1/10W 220	1	
R852		ERJ6GEYJ392	M.RESISTOR CH 1/10W 3.9K	1	
R853		ERJ6GEYJ470	M.RESISTOR CH 1/10W 47	1	
R854		ERJ6GEYJ471	M.RESISTOR CH 1/10W 470	1	
R855		ERJ6GEYJ152	M.RESISTOR CH 1/10W 1.5K	1	
R856,57		ERJ6GEYJ101	M.RESISTOR CH 1/10W 100	2	
R858		ERJ6GEYJ222	M.RESISTOR CH 1/10W 2.2K	1	
R859		ERJ6GEYJ102	M.RESISTOR CH 1/10W 1K	1	
R860		ERJ6GEYJ101	M.RESISTOR CH 1/10W 100	1	
R861		ERJ6GEYJ332	M.RESISTOR CH 1/10W 3.3K	1	
R862		ERJ6GEYJ223	M.RESISTOR CH 1/10W 22K	1	

Refer to the P.C.BOARDS LIST, page 6-1-1, before using this page.

Ref.No.		Part No.	Part Name & Description	Pcs	Remarks
R863		ERJ6GEYJ332	M.RESISTOR CH 1/10W 3.3K	1	
R864		ERJ6GEYJ472	M.RESISTOR CH 1/10W 4.7K	1	
R865		ERJ6GEYJ103	M.RESISTOR CH 1/10W 10K	1	
R866		ERJ6GEYJ683	M.RESISTOR CH 1/10W 68K	1	
R867		ERJ6GEYJ473	M.RESISTOR CH 1/10W 47K	1	
R868		ERJ6GEYJ471	M.RESISTOR CH 1/10W 470	1	
R870		ERJ6GEYJ471	M.RESISTOR CH 1/10W 470	1	
R871		ERJ6GEYJ221	M.RESISTOR CH 1/10W 220	1	
R872		ERJ6GEYJ392	M.RESISTOR CH 1/10W 3.9K	1	
R873		VRE0034E27B	M.RESISTOR CH 1/10W 1.87K	1	
R874		VRE0034E751	M.RESISTOR CH 1/10W 750	1	
R875		ERJ6GEYJ332	M.RESISTOR CH 1/10W 3.3K	1	
R876		ERJ6GEYJ152	M.RESISTOR CH 1/10W 1.5K	1	
R878		ERJ6GEYG301	M.RESISTOR CH 1/10W 300	1	
R879		ERJ6GEYG471	M.RESISTOR CH 1/10W 470	1	
R880		ERJ6GEYJ332	M.RESISTOR CH 1/10W 3.3K	1	
R881		ERJ6GEYJ101	M.RESISTOR CH 1/10W 100	1	
R882		ERJ6GEYJ151	M.RESISTOR CH 1/10W 150	1	
R883		VRE0034E26A	M.RESISTOR CH 1/10W 182	1	
R884		ERJ6GEYJ331	M.RESISTOR CH 1/10W 330	1	
R885		VRE0034E89A	M.RESISTOR CH 1/10W 825	1	
R886,87		ERJ6GEYJ470	M.RESISTOR CH 1/10W 47	2	
R888		ERJ6GEYJ331	M.RESISTOR CH 1/10W 330	1	
R888		ERJ6GEYJ331	M.RESISTOR CH 1/10W 330	1	
R889		ERJ6GEYJ681	M.RESISTOR CH 1/10W 680	1	
R890		ERJ6GEYJ273	M.RESISTOR CH 1/10W 27K	1	
R891		ERJ6GEYJ183	M.RESISTOR CH 1/10W 18K	1	
R892		ERJ6GEYJ221	M.RESISTOR CH 1/10W 220	1	
R893		ERJ6GEYJ273	M.RESISTOR CH 1/10W 27K	1	
R894		ERJ6GEYJ183	M.RESISTOR CH 1/10W 18K	1	
R895		ERJ6GEYJ221	M.RESISTOR CH 1/10W 220	1	
R896		ERJ6GEYG223	M.RESISTOR CH 1/10W 22K	1	
R897		ERJ6GEYJ470	M.RESISTOR CH 1/10W 47	1	
R898		VRE0034E26A	M.RESISTOR CH 1/10W 182	1	
R899		VRE0034E89A	M.RESISTOR CH 1/10W 825	1	
R900		ERJ6GEYG331	M.RESISTOR CH 1/10W 330	1	
R901		VRE0034E59A	M.RESISTOR CH 1/10W 413	1	
R902		VRE0034E102	M.RESISTOR CH 1/10W 1K	1	
R903		ERJ6GEYJ392	M.RESISTOR CH 1/10W 3.9K	1	
R904		ERJ6GEYJ470	M.RESISTOR CH 1/10W 47	1	
R905,06		ERJ6GEYJ222	M.RESISTOR CH 1/10W 2.2K	2	
R907		ERJ6GEYJ470	M.RESISTOR CH 1/10W 47	1	
R909		ERJ6GEYJ472	M.RESISTOR CH 1/10W 4.7K	1	
R910		ERJ6GEYJ473	M.RESISTOR CH 1/10W 47K	1	
R911		ERJ6GEYJ332	M.RESISTOR CH 1/10W 3.3K	1	
R912		ERJ6GEYJ471	M.RESISTOR CH 1/10W 470	1	
R913		ERJ6GEYJ102	M.RESISTOR CH 1/10W 1K	1	
R914		ERJ6GEYJ472	M.RESISTOR CH 1/10W 4.7K	1	
R915		ERJ6GEYJ222	M.RESISTOR CH 1/10W 2.2K	1	
R920		ERJ6GEYJ331	M.RESISTOR CH 1/10W 330	1	
R921,22		ERJ6GEYJ470	M.RESISTOR CH 1/10W 47	2	
R923		ERJ6GEYJ152	M.RESISTOR CH1/10W 1.5K	1	
R924		ERJ6GEYJ222	M.RESISTOR CH 1/10W 2.2K	1	
R925,26		ERJ6GEYJ470	M.RESISTOR CH 1/10W 47	2	
R927,28		ERJ6GEYJ222	M.RESISTOR CH 1/10W 2.2K	2	
R929		ERJ6GEYJ471	M.RESISTOR CH 1/10W 470	1	
R930		ERJ6GEYJ470	M.RESISTOR CH 1/10W 47	1	
R931		ERJ6GEYJ152	M.RESISTOR CH 1/10W 1.5K	1	
R932		ERJ6GEYJ221	M.RESISTOR CH 1/10W 220	1	
R933		ERJ6GEYJ222	M.RESISTOR CH 1/10W 2.2K	1	
R934		ERJ6GEYJ682	M.RESISTOR CH 1/10W 6.8K	1	
R935		ERJ6GEYJ182	M.RESISTOR CH 1/10W 1.8K	1	
R936		ERJ6GEYJ471	M.RESISTOR CH 1/10W 470	1	
R937,38		ERJ6GEYJ332	M.RESISTOR CH 1/10W 3.3K	2	
R939		ERJ6GEYJ471	M.RESISTOR CH 1/10W 470	1	
R940		ERJ6GEYJ103	M.RESISTOR CH 1/10W 10K	1	
R941		ERJ6GEYJ683	M.RESISTOR CH 1/10W 68K	1	
R942		ERJ6GEYJ222	M.RESISTOR CH 1/10W 2.2K	1	
R943		ERJ6GEYJ273	M.RESISTOR CH 1/10W 27K	1	
R944		ERJ6GEYJ682	M.RESISTOR CH 1/10W 6.8K	1	
R945,46		ERJ6GEYK475	M.RESISTOR CH 1/10W 4.7M	2	
R947		ERJ6GEYJ272	M.RESISTOR CH 1/10W 2.7K	1	
R948		ERJ6GEYJ471	M.RESISTOR CH 1/10W 470	1	
R949		ERJ6GEYJ102	M.RESISTOR CH 1/10W 1K	1	
R950		ERJ6GEYJ472	M.RESISTOR CH 1/10W 4.7K	1	

Ref.No.		Part No.	Part Name & Description	Pcs	Remarks
R951		ERJ6GEYJ102	M.RESISTOR CH 1/10W 1K	1	
R952		ERJ6GEYJ472	M.RESISTOR CH 1/10W 4.7K	1	
R953,54		ERJ6GEYJ105	M.RESISTOR CH 1/10W 1M	2	
R955,56		ERJ6GEYK475	M.RESISTOR CH 1/10W 4.7M	2	
R957,58		ERJ6GEYJ472	M.RESISTOR CH 1/10W 4.7K	2	
R959		ERJ6GEYJ471	M.RESISTOR CH 1/10W 470	1	
R960		ERJ6GEYJ153	M.RESISTOR CH 1/10W 15K	1	
R961-63		ERJ6GEYJ103	M.RESISTOR CH 1/10W 10K	3	
R964		ERJ6GEYJ101	M.RESISTOR CH 1/10W 100	1	
R965		ERJ6GEYJ102	M.RESISTOR CH 1/10W 1K	1	
R966-68		ERJ6GEYJ103	M.RESISTOR CH 1/10W 10K	3	
R969,70		ERJ6GEYJ472	M.RESISTOR CH 1/10W 4.7K	2	
R971		ERJ6GEYJ223	M.RESISTOR CH 1/10W 22K	1	
R972		ERDS2TJ331	C.RESISTOR 1/4W 330	1	
R973		ERJ6GEYJ102	M.RESISTOR CH 1/10W 1K	1	
R974		ERJ6GEY0R00	M.RESISTOR CH 1/10W 0	1	
R975,76		ERJ6GEYJ470	M.RESISTOR CH 1/10W 47	2	
R977		ERJ6GEYJ682	M.RESISTOR CH 1/10W 6.8K	1	
R978,79		ERJ6GEYJ221	M.RESISTOR CH 1/10W 220	2	
R980		ERJ6GEYJ682	M.RESISTOR CH 1/10W 6.8K	1	
R981,82		ERJ6GEYJ101	M.RESISTOR CH 1/10W 100	2	
R983,84		ERJ6GEYJ681	M.RESISTOR CH 1/10W 680	2	
R985		ERJ6GEYJ470	M.RESISTOR CH 1/10W 47	1	
R986,87		ERJ6GEYJ331	M.RESISTOR CH 1/10W 330	2	
R989		ERJ6GEYJ472	M.RESISTOR CH 1/10W 4.7K	1	
R991,92		ERJ6GEY0R00	M.RESISTOR CH 1/10W 0	2	
R993		ERDS2TJ331	C.RESISTOR 1/4W 330	1	
R994		ERDS2TJ472	C.RESISTOR 1/4W 4.7K	1	
SW304		VSS0126	SWITCH	1	
SW305,06		VSS0207	SWITCH	2	
SW704		VSS0126	SWITCH	1	
TP301-04		VJR0646	TEST POINT	4	
TP306-13		VJR0646	TEST POINT	8	
TP315		VJR0646	TEST POINT	1	
TP317		VJR0646	TEST POINT	1	
TP701-10		VJR0646	TEST POINT	10	
TP712		VJR0646	TEST POINT	1	
TPG301-03		VJR0646	TEST POINT	3	
TPG701-03		VJR0646	TEST POINT	3	
VC301		ECV1ZW10X53T	V.CAPACITOR 10P	1	
VC701		ECV1ZW20X53T	V.CAPACITOR 20P	1	
VL301,02		EIR7QF016B	COIL	2	
VL303		EIR7QF015B	COIL	1	
VL701		EIR7QF016B	COIL	1	
VL702		EIR7QF015B	COIL	1	
VR301		VRV0109B501	V.RESISTOR 500	1	
VR302		VRV0109B102	V.RESISTOR 1K	1	
VR303		VRV0109B501	V.RESISTOR 500	1	
VR304		VRV0109B102	V.RESISTOR 1K	1	
VR309		VRV0109B101	V.RESISTOR 100	1	
VR310		VRV0109B502	V.RESISTOR 5K	1	
VR311		VRV0109B501	V.RESISTOR 500	1	
VR312		VRV0064B104	V.RESISTOR 100K	1	
VR313,14		VRV0064B502	V.RESISTOR 5K	2	
VR317		VRV0109B501	V.RESISTOR 500	1	
VR318		VRV0109B203	V.RESISTOR 20K	1	
VR319,20		VRV0109B102	V.RESISTOR 1K	2	
VR321		VRV0109B203	V.RESISTOR 20K	1	
VR322		VRV0109B102	V.RESISTOR 1K	1	
VR323		VRV0109B203	V.RESISTOR 20K	1	

Refer to the P.C.BOARDS LIST, page 6-1-1, before using this page.

Ref.No.		Part No.	Part Name & Description	Pcs	Remarks
VR324		VRV0109B102	V.RESISTOR 1K	1	
VR325		VRV0109B202	V.RESISTOR 2K	1	
VR326		VRV0109B102	V.RESISTOR 1K	1	
VR327		VRV0064B203	V.RESISTOR 20K	1	
VR328		VRV0109B203	V.RESISTOR 20K	1	
VR329,30		VRV0112B504	V.RESISTOR 100K	2	
VR331		VRV0109B103	V.RESISTOR 10K	1	
VR701,02		VRV0109B501	V.RESISTOR 500	2	
VR710,11		VRV0064B502	V.RESISTOR 5K	2	
VR714		VRV0109B501	V.RESISTOR 500	1	
VR715		VRV0109B203	V.RESISTOR 20K	1	
VR716,17		VRV0109B102	V.RESISTOR 1K	2	
VR718		VRV0109B203	V.RESISTOR 20K	1	
VR719		VRV0109B102	V.RESISTOR 1K	1	
VR720		VRV0109B203	V.RESISTOR 20K	1	
VR721		VRV0109B102	V.RESISTOR 1K	1	
VR722		VRV0109B202	V.RESISTOR 2K	1	
VR723		VRV0109B102	V.RESISTOR 1K	1	
VR724		VRV0064B203	V.RESISTOR 20K	1	
VR725		VRV0109B504	V.RESISTOR 500K	1	
VR726		VRV0109B103	V.RESISTOR 10K	1	
			MISCELLANEOUS		
		VML2143	CARD PULLER	1	
		VML2144	CARD PULLER	1	
		VMS4174	PIN	6	
		VM21547	BARRIER	1	
		VSC3056	SHIELD CASE	1	
		VXA3966	P.C.B. SHIELD PLATE	1	
		XNG26E	NUT	4	
		XYNV3+K6FR	SCREW	6	
		XYN26+C12	SCREW	4	

Refer to the P.C.BOARDS LIST, page 6-1-1, before using this page.

Ref.No.		Part No.	Part Name & Description	Pcs	Remarks
	■	VEP83098G	P.C.BOARD W/COMPONENT		FOR AU-62-E,B
			W3 MOD & DEMOD		
			CAPACITORS		
C62		ECUM1E104ZFN	C.CAPACITOR CH 25V 0.1U	1	
C63		ECEA1CU101	E.CAPACITOR 16V 100U	1	
C64		ECUM1E104ZFN	C.CAPACITOR CH 25V 0.1U	1	
C65		ECSF1CE106	T.CAPACITOR 16V 10U	1	
C66		ECUM1E104ZFN	C.CAPACITOR CH 25V 0.1U	1	
C67		ECSF1CE106	T.CAPACITOR 16V 10U	1	
C68		ECUM1E104ZFN	C.CAPACITOR CH 25V 0.1U	1	
C69,70		ECSF1CE106	T.CAPACITOR 16V 10U	2	
C71		ECUM1E104ZFN	C.CAPACITOR CH 25V 0.1U	1	
C72		ECEA1CU101	E.CAPACITOR 16V 100U	1	
C301,02		ECUM1H103KBN	C.CAPACITOR CH 50V 0.01U	2	
C303		ECUM1H270JCN	C.CAPACITOR CH 50V 27P	1	
C304,05		ECUM1H103KBN	C.CAPACITOR CH 50V 0.01U	2	
C306		ECUM1H270JCN	C.CAPACITOR CH 50V 27P	1	
C307		ECEA1AU101	E.CAPACITOR 10V 100U	1	
C308,09		ECUM1H103KBN	C.CAPACITOR CH 50V 0.01U	2	
C310		ECEA1AU101	E.CAPACITOR 10V 100U	1	
C311		ECUM1H103KBN	C.CAPACITOR CH 50V 0.01U	1	
C316		ECUM1E104ZFN	C.CAPACITOR CH 25V 0.1U	1	
C322		ECUM1E104ZFN	C.CAPACITOR CH 25V 0.1U	1	
C325		ECUM1E104ZFN	C.CAPACITOR CH 25V 0.1U	1	
C326		ECUM1H103KBN	C.CAPACITOR CH 50V 0.01U	1	
C327		ECUM1E104ZFN	C.CAPACITOR CH 25V 0.1U	1	
C328,29		ECUM1H103KBN	C.CAPACITOR CH 50V 0.01U	2	
C340		ECUM1H103KBN	C.CAPACITOR CH 50V 0.01U	1	
C341		ECEA1CN100S	E.CAPACITOR 16V 10U	1	
C342		ECUM1H103KBN	C.CAPACITOR CH 50V 0.01U	1	
C343		ECUM1H150JCN	C.CAPACITOR CH 50V 15P	1	
C344		ECUM1H101JCN	C.CAPACITOR CH 50V 100P	1	
C345		ECUM1H100DCN	C.CAPACITOR CH 50V 10P	1	
C346		ECUM1H103KBN	C.CAPACITOR CH 50V 0.01U	1	
C347,48		ECEA1AU101	E.CAPACITOR 10V 100U	2	
C349		ECUM1H103KBN	C.CAPACITOR CH 50V 0.01U	1	
C351		ECUM1H221JCN	C.CAPACITOR CH 50V 220P	1	
C352		ECUM1H103KBN	C.CAPACITOR CH 50V 0.01U	1	
C353		ECUM1H680JCN	C.CAPACITOR CH 50V 68P	1	
C354,55		ECUM1H103KBN	C.CAPACITOR CH 50V 0.01U	2	
C356		ECUM1E104ZFN	C.CAPACITOR CH 25V 0.1U	1	
C357		ECEA1HU2R2	E.CAPACITOR 50V 2.2U	1	
C358		ECEA1AU101	E.CAPACITOR 10V 100U	1	
C380		ECUM1E104ZFN	C.CAPACITOR CH 25V 0.1U	1	
C381		ECUM1H103KBN	C.CAPACITOR CH 50V 0.01U	1	
C382		ECUM1E104ZFN	C.CAPACITOR CH 25V 0.1U	1	
C383		ECEA1AU101	E.CAPACITOR 10V 100U	1	
C386		ECUM1H050DCN	C.CAPACITOR CH 50V 50P	1	
C387		ECUM1H100DCN	C.CAPACITOR CH 50V 10P	1	
C389		ECUM1H331JCN	C.CAPACITOR CH 50V 330P	1	
C391		ECUM1H470JCN	C.CAPACITOR CH 50V 47P	1	
C392		ECUM1H103KBN	C.CAPACITOR CH 50V 0.01U	1	
C393		ECEA1AU101	E.CAPACITOR 10V 100U	1	
C394		ECUM1H103KBN	C.CAPACITOR CH 50V 0.01U	1	
C395		ECUM1E104ZFN	C.CAPACITOR CH 25V 0.1U	1	
C396,97		ECUM1H103KBN	C.CAPACITOR CH 50V 0.01U	2	
C398		ECUM1H180JCN	C.CAPACITOR CH 50V 18P	1	
C399		ECUM1H103KBN	C.CAPACITOR CH 50V 0.01U	1	
C400		ECUM1E104ZFN	C.CAPACITOR CH 25V 0.1U	1	
C401-03		ECUM1H103KBN	C.CAPACITOR CH 50V 0.01U	3	
C404		ECEA1AU101	E.CAPACITOR 10V 100U	1	
C405-07		ECUM1E104ZFN	C.CAPACITOR CH 25V 0.1U	3	
C408,09		ECUM1H270JCN	C.CAPACITOR CH 50V 27P	2	
C410		ECEA1AU471	E.CAPACITOR 10V 470U	1	
C411		ECUM1E104ZFN	C.CAPACITOR CH 25V 0.1U	1	
C412		ECUM1H221JCN	C.CAPACITOR CH 50V 220P	1	
C413		ECEA1AU101	E.CAPACITOR 10V 100U	1	
C414		ECUM1H470JCN	C.CAPACITOR CH 50V 47P	1	
C415		ECUM1H180JCN	C.CAPACITOR CH 50V 18P	1	
C416		ECUM1H181JCN	C.CAPACITOR CH 50V 180P	1	
C417,18		ECUM1E104ZFN	C.CAPACITOR CH 25V 0.1U	2	
C419		ECUM1H331JCN	C.CAPACITOR CH 50V 330P	1	
C420		ECUM1H220JCN	C.CAPACITOR CH 50V 22P	1	
C421		ECUM1H680JCN	C.CAPACITOR CH 50V 68P	1	
C422		ECUM1H330JCN	C.CAPACITOR CH 50V 33P	1	
C423		ECEA1AU101	E.CAPACITOR 10V 100U	1	
C424		ECEA1CU100	E.CAPACITOR 16V 10U	1	
C425		ECUM1H221JCN	C.CAPACITOR CH 50V 220P	1	
C426		VCM0044	M.CAPACITOR 130P	1	
C427		VCM0023	M.CAPACITOR 379P	1	
C428		ECUM1H680JCN	C.CAPACITOR CH 50V 68P	1	
C429		ECUM1H390JCN	C.CAPACITOR CH 50V 39P	1	
C430		ECUM1H331JCN	C.CAPACITOR CH 50V 330P	1	
C431		ECUM1H270JCN	C.CAPACITOR CH 50V 27P	1	
C432		ECEA0JU221	E.CAPACITOR 6.3V 220U	1	
C433		ECUM1H050DCN	C.CAPACITOR CH 50V 50P	1	
C434		ECUM1H470JCN	C.CAPACITOR CH 50V 47P	1	
C435		ECUM1H020CCN	C.CAPACITOR CH 50V 2P	1	
C436,37		ECUM1E104ZFN	C.CAPACITOR CH 25V 0.1U	2	
C440		ECUM1H470JCN	C.CAPACITOR CH 50V 47P	1	
C442,43		ECEA1CU221	E.CAPACITOR 16V 220U	2	
C444,45		ECUM1H103KBN	C.CAPACITOR CH 50V 0.01U	2	
C446,47		VCM0027	V.CAPACITOR	2	
C448		ECEA1AU101	E.CAPACITOR 10V 100U	1	
C449		ECUM1E104ZFN	C.CAPACITOR CH 25V 0.1U	1	
C450		ECEA1AU101	E.CAPACITOR 10V 100U	1	
C451		ECEA1CU101	E.CAPACITOR 16V 100U	1	
C453		ECUM1E104ZFN	C.CAPACITOR CH 25V 0.1U	1	
C454		ECUM1H820JCN	C.CAPACITOR CH 50V 82P	1	
C455,56		ECUM1H103KBN	C.CAPACITOR CH 50V 0.01U	2	
C457,58		ECEA1AU101	E.CAPACITOR 10V 100U	2	
C459		ECUM1H151JCN	C.CAPACITOR CH 50V 150P	1	
C460		ECUM1H471JCN	C.CAPACITOR CH 50V 470P	1	
C461,62		ECEA1CU100	E.CAPACITOR 16V 10U	2	
C463		ECUM1H181JCN	C.CAPACITOR CH 50V 180P	1	
C464		ECUM1H680JCN	C.CAPACITOR CH 50V 68P	1	
C465,66		ECEA1AU101	E.CAPACITOR 10V 100U	2	
C467		ECUM1E104ZFN	C.CAPACITOR CH 25V 0.1U	1	
C468		ECUM1H103KBN	C.CAPACITOR CH 50V 0.01U	1	
C469		ECUM1H220JCN	C.CAPACITOR CH 50V 22P	1	
C470		ECCF1H330JC	C.CAPACITOR 50V 33P	1	
C471		ECCF1H060DC	C.CAPACITOR 50V 6P	1	
C701,02		ECUM1H103KBN	C.CAPACITOR CH 50V 0.01U	2	
C703		ECEA1AU101	E.CAPACITOR 10V 100U	1	
C704,05		ECUM1H103KBN	C.CAPACITOR CH 50V 0.01U	2	
C706		ECUM1H330JCN	C.CAPACITOR CH 50V 33P	1	
C725		ECUM1H180JCN	C.CAPACITOR CH 50V 18P	1	
C726		ECUM1H103KBN	C.CAPACITOR CH 50V 0.01U	1	
C727		ECUM1E104ZFN	C.CAPACITOR CH 25V 0.1U	1	
C728		ECUM1H220JCN	C.CAPACITOR CH 50V 22P	1	
C729		ECUM1H121JCN	C.CAPACITOR CH 50V 120P	1	
C730,31		ECUM1H103KBN	C.CAPACITOR CH 50V 0.01U	2	
C732		ECUM1H101JCN	C.CAPACITOR CH 50V 100P	1	
C733		ECEA1AU101	E.CAPACITOR 10V 100U	1	
C734		ECUM1H331JCN	C.CAPACITOR CH 50V 330P	1	
C735		ECEA1AU101	E.CAPACITOR 10V 100U	1	
C736		ECUM1H103KBN	C.CAPACITOR CH 50V 0.01U	1	
C737		ECUM1H101JCN	C.CAPACITOR CH 50V 100P	1	
C738		ECUM1H103KBN	C.CAPACITOR CH 50V 0.01U	1	
C744		ECUM1E104ZFN	C.CAPACITOR CH 25V 0.1U	1	
C745		ECUM1H103KBN	C.CAPACITOR CH 50V 0.01U	1	
C746		ECUM1E104ZFN	C.CAPACITOR CH 25V 0.1U	1	
C747		ECEA1AU101	E.CAPACITOR 10V 100U	1	
C749		ECUM1H561JCN	C.CAPACITOR CH 50V 560P	1	
C750		ECUM1H331JCN	C.CAPACITOR CH 50V 330P	1	
C751		ECUM1H221JCN	C.CAPACITOR CH 50V 220P	1	
C752		ECUM1H561JCN	C.CAPACITOR CH 50V 560P	1	
C753		ECUM1H270JCN	C.CAPACITOR CH 50V 27P	1	
C754		ECUM1H181JCN	C.CAPACITOR CH 50V 180P	1	
C755		ECUM1H270JCN	C.CAPACITOR CH 50V 27P	1	
C756		ECUM1H101JCN	C.CAPACITOR CH 50V 100P	1	
C757		ECUM1H270JCN	C.CAPACITOR CH 50V 27P	1	

Refer to the P.C.BOARDS LIST, page 6-1-1, before using this page.

Ref.No.		Part No.	Part Name & Description	Pcs	Remarks
C758		ECUM1H050DCN	C.CAPACITOR CH 50V 50P	1	
C759		ECUM1E104ZFN	C.CAPACITOR CH 25V 0.1U	1	
C760		ECUM1H100DCN	C.CAPACITOR CH 50V 10P	1	
C762		ECUM1H391JCN	C.CAPACITOR CH 50V 390P	1	
C764		ECUM1H560JCN	C.CAPACITOR CH 50V 56P	1	
C765,66		ECUM1H103KBN	C.CAPACITOR CH 50V 0.01U	2	
C767		ECEA1AU101	E.CAPACITOR 10V 100U	1	
C768,69		ECUM1H103KBN	C.CAPACITOR CH 50V 0.01U	2	
C770		ECUM1H220JCN	C.CAPACITOR CH 50V 22P	1	
C771		ECUM1H681JCN	C.CAPACITOR CH 50V 680P	1	
C772		ECUM1E104ZFN	C.CAPACITOR CH 25V 0.1U	1	
C773-75		ECUM1H103KBN	C.CAPACITOR CH 50V 0.01U	3	
C776		ECUM1E104ZFN	C.CAPACITOR CH 25V 0.1U	1	
C777		ECEA1AU101	E.CAPACITOR 10V 100U	1	
C778,79		ECUM1E104ZFN	C.CAPACITOR CH 25V 0.1U	2	
C780,81		ECUM1H390JCN	C.CAPACITOR CH 50V 39P	2	
C782		ECEA1AU471	E.CAPACITOR 10V 470U	1	
C783		ECUM1E104ZFN	C.CAPACITOR CH 25V 0.1U	1	
C784		ECUM1H221JCN	C.CAPACITOR CH 50V 220P	1	
C785		ECEA1AU101	E.CAPACITOR 10V 100U	1	
C786		ECUM1H121JCN	C.CAPACITOR CH 50V 120P	1	
C787		ECUM1H100DCN	C.CAPACITOR CH 50V 10P	1	
C788		ECUM1H331JCN	C.CAPACITOR CH 50V 330P	1	
C789,90		ECUM1E104ZFN	C.CAPACITOR CH 25V 0.1U	2	
C791		ECUM1H331JCN	C.CAPACITOR CH 50V 330P	1	
C792		ECUM1H220JCN	C.CAPACITOR CH 50V 22P	1	
C793		ECUM1H680JCN	C.CAPACITOR CH 50V 68P	1	
C794		ECUM1H330JCN	C.CAPACITOR CH 50V 33P	1	
C796		ECEA1CU100	E.CAPACITOR 16V 10U	1	
C797		VCM0023	M.CAPACITOR 379P	1	
C799		ECEA0JU221	E.CAPACITOR 6.3V 220U	1	
C800		ECUM1H050DCN	C.CAPACITOR CH 50V 50P	1	
C801		ECUM1H020CCN	C.CAPACITOR CH 50V 2P	1	
C802		ECUM1H330JCN	C.CAPACITOR CH 50V 33P	1	
C803,04		ECUM1E104ZFN	C.CAPACITOR CH 25V 0.1U	2	
C805		ECUM1H470JCN	C.CAPACITOR CH 50V 47P	1	
C808		ECEA1CU221	E.CAPACITOR 16V 220U	1	
C810		ECEA1CU221	E.CAPACITOR 16V 220U	1	
C811,12		ECUM1H103KBN	C.CAPACITOR CH 50V 0.01U	2	
C813,14		VCM0027	V.CAPACITOR	2	
C815		ECEA1AU101	E.CAPACITOR 10V 100U	1	
C816		ECUM1E104ZFN	C.CAPACITOR CH 25V 0.1U	1	
C817		ECEA1AU101	E.CAPACITOR 10V 100U	1	
C818		ECUM1H220JCN	C.CAPACITOR CH 50V 22P	1	
C819		ECEA1CU101	E.CAPACITOR 16V 100U	1	
C821		ECUM1E104ZFN	C.CAPACITOR CH 25V 0.1U	1	
C822		ECUM1H101JCN	C.CAPACITOR CH 50V 100P	1	
C823,24		ECUM1H103KBN	C.CAPACITOR CH 50V 0.01U	2	
C825		ECEA1AU101	E.CAPACITOR 10V 100U	1	
C826		ECUM1H680JCN	C.CAPACITOR CH 50V 68P	1	
C827		ECUM1H100DCN	C.CAPACITOR CH 50V 10P	1	
C828		ECUM1H221JCN	C.CAPACITOR CH 50V 220P	1	
C829		ECEA1AU101	E.CAPACITOR 10V 100U	1	
C830,31		ECEA1CU100	E.CAPACITOR 16V 10U	2	
C832,33		ECEA1AU101	E.CAPACITOR 10V 100U	2	
C834		ECUM1H470JCN	C.CAPACITOR CH 50V 47P	1	
C835		ECUM1H680JCN	C.CAPACITOR CH 50V 68P	1	
C836		ECCF1H330JC	C.CAPACITOR 50V 33P	1	
C837		ECCF1H060DC	C.CAPACITOR 50V 6P	1	
D301		MA151WK	DIODE	1	
D303		MA151K	DIODE	1	
D305		MA151K	DIODE	1	
D306,07		MA151WK	DIODE	2	
D308-10		MA151WA	DIODE	3	
D701		MA151WK	DIODE	1	
D702,03		MA151K	DIODE	2	
D705		MA151K	DIODE	1	
D706		MA151WK	DIODE	1	
D707		MA151WA	DIODE	1	

Ref.No.		Part No.	Part Name & Description	Pcs	Remarks
DL301		VLD0190	DELAY	1	
DL701		VLD0199	DELAY	1	
FL301		VLF0545	FILTER	1	
FL302		VLF0658	FILTER	1	
FL303		VLF0712	FILTER	1	
FL701		VLF0652	FILTER	1	
IC10		AN79N09	IC	1	
IC11,12		AN79M05F	IC	2	
IC13		AN78M05F	IC	1	
IC14		AN78N05	IC	1	
IC15		AN78N09	IC	1	
IC301		AN6308S	IC	1	
IC304		AN6308S	IC	1	
IC305		AN608P	IC	1	
IC306		NJM1496M	IC	1	
IC307		UPD4053BG	IC	1	
IC309		RC082BM	IC	1	
IC311-15		10116D	IC	5	
IC316		SN74LS123NS	IC	1	
IC317		MC74HC00AF	IC	1	
IC319		NE5539D	IC	1	
IC322		NJM592M8	IC	1	
IC323		MC74HC4053F	IC	1	
IC324		RC082BM	IC	1	
IC325		TC74HC221AF	IC	1	
IC326		RC082BM	IC	1	
IC701		AN6308S	IC	1	
IC705		NJM1496M	IC	1	
IC706		UPD4053BG	IC	1	
IC708-12		10116D	IC	5	
IC716		NE5539D	IC	1	
IC719		NJM592M8	IC	1	
IC720		MC74HC4053F	IC	1	
IC721		RC082BM	IC	1	
IC722		TC74HC221AF	IC	1	
L301		VLQEL05F101K	COIL 100UH	1	
L302,03		VLQEL05S100J	COIL 10UH	2	
L304		VLQEL05F101K	COIL 100UH	1	
L308		VLQEL05S3R3J	COIL 3.3UH	1	
L309,10		VLQEL05F101K	COIL 100UH	2	
L311		VLQEL05S330J	COIL 33UH	1	
L312		VLQEL05S2R7J	COIL 2.7UH	1	
L313		VLQEL05F101K	COIL 100UH	1	
L318		VLQEL05F101K	COIL 100UH	1	
L320,21		VLQEL05S2R2J	COIL 2.2UH	2	
L322		VLQEL05S180J	COIL 18UH	1	
L323		VLQEL05F101K	COIL 100UH	1	
L324		VLQEL05S1R0J	COIL 1UH	1	
L325-27		VLQEL05F101K	COIL 100UH	3	
L328		VLQEL05S6R8J	COIL 6.8UH	1	
L329		VLQEL05F101K	COIL 100UH	1	
L330		VLQEL05S3R3J	COIL 3.3UH	1	
L333		VLQEL05F101K	COIL 100UH	1	
L334		VLQEL05S6R8K	COIL 6.8UH	1	
L335		VLQEL05F101K	COIL 100UH	1	
L339		VLQEL05S6R8J	COIL 6.8UH	1	
L340,41		VLQEL05F101K	COIL 100UH	2	
L342		VLQEL05S820J	COIL 82UH	1	
L343,44		VLQEL05F101K	COIL 100UH	2	
L701		VLQEL05F101K	COIL 100UH	1	
L702		VLQEL05S150J	COIL 15UH	1	
L709		VLQEL05S4R7J	COIL 4.7UH	1	
L710		VLQEL05F101K	COIL 100UH	1	
L711		VLQEL05S560J	COIL 56UH	1	
L712		VLQEL05F101K	COIL 100UH	1	
L713		VLQEL05S3R9J	COIL 3.9UH	1	

Refer to the P.C.BOARDS LIST, page 6-1-1, before using this page.

Ref.No.		Part No.	Part Name & Description	Pcs	Remarks
L715		VLQEL05F101K	COIL 100UH	1	
L716		VLQEL05S181J	COIL 180UH	1	
L717		VLQEL05S680J	COIL 68UH	1	
L718		VLQEL05S2R2J	COIL 2.2UH	1	
L719,20		VLQEL05S6R8J	COIL 6.8UH	2	
L721		VLQEL05S4R7J	COIL 4.7UH	1	
L722		VLQEL05S2R7J	COIL 2.7UH	1	
L723		VLQEL05S270J	COIL 27UH	1	
L724		VLQEL05F101K	COIL 100UH	1	
L725		VLQEL05S1R5J	COIL 1.5UH	1	
L726-28		VLQEL05F101K	COIL 100UH	3	
L729		VLQEL05S150J	COIL 15UH	1	
L731		VLQEL05F101K	COIL 100UH	1	
L732		VLQEL05S6R8K	COIL 6.8UH	1	
L733		VLQEL05F101K	COIL 100UH	1	
L737		VLQEL05S220J	COIL 22UH	1	
L738		VLQEL05S390J	COIL 39UH	1	
L739-42		VLQEL05F101K	COIL 100UH	4	
Q301-04		2SC2295	TRANSISTOR CHIP	4	(B,C)
Q309,10		2SC2295	TRANSISTOR CHIP	2	(B,C)
Q311		2SA1022-C	TRANSISTOR CHIP	1	(B,C)
Q313,14		2SC2295	TRANSISTOR CHIP	2	(B,C)
Q315		2SA1022-C	TRANSISTOR CHIP	1	(B,C)
Q316		2SC2295	TRANSISTOR CHIP	1	(B,C)
Q317,18		2SA1022-C	TRANSISTOR CHIP	2	(B,C)
Q319		IMX4	TRANSISTOR	1	
Q320		UN2113	TRANSISTOR-RESISTOR	1	
Q324		2SC2295	TRANSISTOR CHIP	1	(B,C)
Q326		2SC2295	TRANSISTOR CHIP	1	(B,C)
Q327		2SA1022-C	TRANSISTOR CHIP	1	(B,C)
Q329-38		2SC2295	TRANSISTOR CHIP	10	(B,C)
Q339,40		UN2213	TRANSISTOR-RESISTOR	2	
Q341		2SA1462	TRANSISTOR	1	
Q342,43		2SC3757	TRANSISTOR	2	(Q,R)
Q344		2SC2295	TRANSISTOR CHIP	1	(B,C)
Q345		2SA1022-C	TRANSISTOR CHIP	1	(B,C)
Q346		2SC2480	TRANSISTOR	1	
Q347		2SA1462	TRANSISTOR	1	
Q348		2SC2480	TRANSISTOR	1	
Q349,50		2SA1226	TRANSISTOR	2	
Q351		2SK374	TRANSISTOR	1	
Q352		2SC3757	TRANSISTOR	1	(Q,R)
Q353		2SA1226	TRANSISTOR	1	
Q356-61		UN2113	TRANSISTOR-RESISTOR	6	
Q362,63		2SC2295	TRANSISTOR CHIP	2	(B,C)
Q364		2SA1022-C	TRANSISTOR CHIP	1	(B,C)
Q365,66		2SA1226	TRANSISTOR	2	
Q367		2SC3757	TRANSISTOR	1	(Q,R)
Q368,69		2SC2295	TRANSISTOR CHIP	2	(B,C)
Q370,71		UN2113	TRANSISTOR-RESISTOR	2	
Q372		2SC2295	TRANSISTOR CHIP	1	(B,C)
Q373-75		UN2213	TRANSISTOR-RESISTOR	3	
Q376		2SA1462	TRANSISTOR	1	
Q377		2SA1226	TRANSISTOR	1	
Q378		2SB709	TRANSISTOR CHIP	1	(Q,R)
Q379		2SC2480	TRANSISTOR	1	
Q380,81		2SC2295	TRANSISTOR CHIP	2	(B,C)
Q382-84		2SC3757	TRANSISTOR	3	(Q,R)
Q385,86		2SC2295	TRANSISTOR CHIP	2	(B,C)
Q387		2SA1022-C	TRANSISTOR CHIP	1	(B,C)
Q388		2SD601	TRANSISTOR CHIP	1	(Q,R)
Q389		2SB709	TRANSISTOR CHIP	1	(Q,R)
Q701,02		2SA1022-C	TRANSISTOR CHIP	2	(B,C)
Q710,11		2SC2295	TRANSISTOR CHIP	2	(B,C)
Q712		2SA1022-C	TRANSISTOR CHIP	1	(B,C)
Q713		2SC2295	TRANSISTOR CHIP	1	(B,C)
Q714,15		2SA1022-C	TRANSISTOR CHIP	2	(B,C)
Q716		2SC2295	TRANSISTOR CHIP	1	(B,C)
Q718		2SC2295	TRANSISTOR CHIP	1	(B,C)
Q719		2SA1022-C	TRANSISTOR CHIP	1	(B,C)
Q721-30		2SC2295	TRANSISTOR CHIP	10	(B,C)
Q731		UN2213	TRANSISTOR-RESISTOR	1	

Ref.No.		Part No.	Part Name & Description	Pcs	Remarks
Q732		2SA1462	TRANSISTOR	1	
Q733		2SC2295	TRANSISTOR CHIP	1	(B,C)
Q734		2SA1022-C	TRANSISTOR CHIP	1	(B,C)
Q735		2SC2480	TRANSISTOR	1	
Q736		2SA1462	TRANSISTOR	1	
Q737		2SC2480	TRANSISTOR	1	
Q738,39		2SA1226	TRANSISTOR	2	
Q740		2SK374	TRANSISTOR	1	
Q741		2SC3757	TRANSISTOR	1	(Q,R)
Q742		2SA1226	TRANSISTOR	1	
Q745,46		2SC2295	TRANSISTOR CHIP	2	(B,C)
Q747		2SA1022-C	TRANSISTOR CHIP	1	(B,C)
Q748,49		2SA1226	TRANSISTOR	2	
Q750		2SC3757	TRANSISTOR	1	(Q,R)
Q751		2SC2295	TRANSISTOR CHIP	1	(B,C)
Q753		2SC2295	TRANSISTOR CHIP	1	(B,C)
Q754		2SA1462	TRANSISTOR	1	
Q755		2SA1226	TRANSISTOR	1	
Q756		2SB709	TRANSISTOR CHIP	1	(Q,R)
Q757		2SC2480	TRANSISTOR	1	
Q758-60		2SC3757	TRANSISTOR	3	(Q,R)
Q761		2SC2295	TRANSISTOR CHIP	1	(B,C)
Q762		2SA1022-C	TRANSISTOR CHIP	1	(B,C)
Q763		2SD601	TRANSISTOR CHIP	1	(Q,R)
Q764		2SB709	TRANSISTOR CHIP	1	(Q,R)
			RESISTORS		
R20		ERJ6GEYJ472	M.RESISTOR CH 1/10W 4.7K	1	
R101		ERJ6GEYJ470	M.RESISTOR CH 1/10W 47	1	
R301		ERJ6GEYJ470	M.RESISTOR CH 1/10W 47	1	
R302		ERJ6GEYJ681	M.RESISTOR CH 1/10W 680	1	
R303		ERJ6GEYJ102	M.RESISTOR CH 1/10W 1K	1	
R304		ERJ6GEYJ332	M.RESISTOR CH 1/10W 3.3K	1	
R305		ERJ6GEYJ470	M.RESISTOR CH 1/10W 47	1	
R306		ERJ6GEYJ681	M.RESISTOR CH 1/10W 680	1	
R307		ERJ6GEYJ102	M.RESISTOR CH 1/10W 1K	1	
R308		ERJ6GEYJ332	M.RESISTOR CH 1/10W 3.3K	1	
R309		ERJ6GEYJ222	M.RESISTOR CH 1/10W 2.2K	1	
R310		ERJ6GEYJ470	M.RESISTOR CH 1/10W 47	1	
R322		ERJ6GEYJ470	M.RESISTOR CH 1/10W 47	1	
R323		ERJ6GEYJ152	M.RESISTOR CH 1/10W 1.5K	1	
R324		ERJ6GEYJ470	M.RESISTOR CH 1/10W 47	1	
R325,26		ERJ6GEYJ102	M.RESISTOR CH 1/10W 1K	2	
R327		ERJ6GEYJ103	M.RESISTOR CH 1/10W 10K	1	
R328		ERJ6GEYJ105	M.RESISTOR CH 1/10W 1M	1	
R329		ERJ6GEYJ224	M.RESISTOR CH 1/10W 220K	1	
R330		ERJ6GEYJ473	M.RESISTOR CH 1/10W 47K	1	
R331		ERJ6GEYJ223	M.RESISTOR CH 1/10W 22K	1	
R332		ERJ6GEYJ152	M.RESISTOR CH 1/10W 1.5K	1	
R333,34		ERJ6GEYG471	M.RESISTOR CH 1/10W 470	2	
R335,36		ERJ6GEYJ470	M.RESISTOR CH 1/10W 47	2	
R337,38		ERJ6GEYJ222	M.RESISTOR CH 1/10W 2.2K	2	
R339,40		ERJ6GEYJ271	M.RESISTOR CH 1/10W 270	2	
R341		ERJ6GEYJ470	M.RESISTOR CH 1/10W 47	1	
R342		ERJ6GEYJ271	M.RESISTOR CH 1/10W 270	1	
R343		ERJ6GEYJ821	M.RESISTOR CH 1/10W 820	1	
R344		ERJ6GEYJ470	M.RESISTOR CH 1/10W 47	1	
R345		ERJ6GEYJ222	M.RESISTOR CH 1/10W 2.2K	1	
R346		ERJ6GEYJ102	M.RESISTOR CH 1/10W 1K	1	
R347		ERJ6GEYG331	M.RESISTOR CH 1/10W 330	1	
R348		ERJ6GEYJ153	M.RESISTOR CH 1/10W 15K	1	
R349		ERJ6GEYJ223	M.RESISTOR CH 1/10W 22K	1	
R350,51		ERJ6GEYJ220	M.RESISTOR CH 1/10W 22	2	
R352		ERJ6GEYJ470	M.RESISTOR CH 1/10W 47	1	
R353		ERJ6GEYJ152	M.RESISTOR CH 1/10W 1.5K	1	
R354		ERJ6GEYJ471	M.RESISTOR CH 1/10W 470	1	
R355		ERJ6GEYJ102	M.RESISTOR CH 1/10W 1K	1	
R356		ERJ6GEYJ221	M.RESISTOR CH 1/10W 220	1	
R357		ERJ6GEYJ222	M.RESISTOR CH 1/10W 2.2K	1	
R358		ERJ6GEYJ101	M.RESISTOR CH 1/10W 100	1	
R359		ERJ6GEYJ472	M.RESISTOR CH 1/10W 4.7K	1	
R360,61		ERJ6GEYJ473	M.RESISTOR CH 1/10W 47K	2	
R362		ERJ6GEYJ472	M.RESISTOR CH 1/10W 4.7K	1	

Ref.No.		Part No.	Part Name & Description	Pcs	Remarks
R363		ERJ6GEYJ223	M.RESISTOR CH 1/10W 22K	1	
R364		ERJ6GEYJ273	M.RESISTOR CH 1/10W 27K	1	
R365		ERJ6GEYJ473	M.RESISTOR CH 1/10W 47K	1	
R366		ERJ6GEYJ223	M.RESISTOR CH 1/10W 22K	1	
R367		ERJ6GEYJ104	M.RESISTOR CH 1/10W 100K	1	
R368		ERJ6GEYJ472	M.RESISTOR CH 1/10W 4.7K	1	
R369		ERJ6GEYJ103	M.RESISTOR CH 1/10W 10K	1	
R370		ERJ6GEYJ223	M.RESISTOR CH 1/10W 22K	1	
R371		ERJ6GEYJ682	M.RESISTOR CH 1/10W 6.8K	1	
R397		ERJ6GEYJ470	M.RESISTOR CH 1/10W 47	1	
R398		ERJ6GEYJ152	M.RESISTOR CH 1/10W 1.5K	1	
R399,00		ERJ6GEYG301	M.RESISTOR CH 1/10W 300	2	
R401		ERJ6GEYJ470	M.RESISTOR CH 1/10W 47	1	
R402		ERJ6GEYJ102	M.RESISTOR CH 1/10W 1K	1	
R403		ERJ6GEYJ681	M.RESISTOR CH 1/10W 680	1	
R404		ERJ6GEYJ102	M.RESISTOR CH 1/10W 1K	1	
R405		ERJ6GEYJ152	M.RESISTOR CH 1/10W 1.5K	1	
R406		ERJ6GEYJ470	M.RESISTOR CH 1/10W 47	1	
R407		ERJ6GEYJ221	M.RESISTOR CH 1/10W 220	1	
R408		ERJ6GEYJ222	M.RESISTOR CH 1/10W 2.2K	1	
R409		ERJ6GEYJ470	M.RESISTOR CH 1/10W 47	1	
R410		ERJ6GEYJ152	M.RESISTOR CH 1/10W 1.5K	1	
R411,12		ERJ6GEYJ331	M.RESISTOR CH 1/10W 330	2	
R413		ERJ6GEYJ470	M.RESISTOR CH 1/10W 47	1	
R414		ERJ6GEYJ222	M.RESISTOR CH 1/10W 2.2K	1	
R415		ERJ6GEYJ470	M.RESISTOR CH 1/10W 47	1	
R426		ERJ6GEYJ470	M.RESISTOR CH 1/10W 47	1	
R427-34		ERJ6GEYJ102	M.RESISTOR CH 1/10W 1K	8	
R435,36		ERJ6GEYJ332	M.RESISTOR CH 1/10W 3.3K	2	
R437		ERJ6GEYJ101	M.RESISTOR CH 1/10W 100	1	
R438,39		ERJ6GEYJ471	M.RESISTOR CH 1/10W 470	2	
R440		ERJ6GEYJ470	M.RESISTOR CH 1/10W 47	1	
R441,42		ERJ6GEYJ681	M.RESISTOR CH 1/10W 680	2	
R443,44		ERJ6GEYJ101	M.RESISTOR CH 1/10W 100	2	
R445		ERJ6GEYJ470	M.RESISTOR CH 1/10W 47	1	
R446		ERJ6GEYJ151	M.RESISTOR CH 1/10W 150	1	
R447,48		ERJ6GEYJ222	M.RESISTOR CH 1/10W 2.2K	2	
R449		ERJ6GEYJ470	M.RESISTOR CH 1/10W 47	1	
R450,51		ERJ6GEYJ222	M.RESISTOR CH 1/10W 2.2K	2	
R452,53		ERJ6GEYJ470	M.RESISTOR CH 1/10W 47	2	
R454-65		ERJ6GEYJ102	M.RESISTOR CH 1/10W 1K	12	
R466		ERJ6GEYJ683	M.RESISTOR CH 1/10W 68K	1	
R467,68		ERJ6GEYJ103	M.RESISTOR CH 1/10W 10K	2	
R469,70		ERJ6GEYJ150	M.RESISTOR CH 1/10W 15	2	
R471,72		ERJ6GEYJ332	M.RESISTOR CH 1/10W 3.3K	2	
R473		ERJ6GEYJ101	M.RESISTOR CH 1/10W 100	1	
R474		ERDS2TJ222	C.RESISTOR 1/4W 2.2K	1	
R475		ERJ6GEYJ102	M.RESISTOR CH 1/10W 1K	1	
R477		ERJ6GEYJ471	M.RESISTOR CH 1/10W 470	1	
R478		ERJ6GEYJ102	M.RESISTOR CH 1/10W 1K	1	
R479		ERJ6GEYJ222	M.RESISTOR CH 1/10W 2.2K	1	
R480,81		ERJ6GEYJ471	M.RESISTOR CH 1/10W 470	2	
R482		ERJ6GEYJ470	M.RESISTOR CH 1/10W 47	1	
R483,84		ERJ6GEYJ333	M.RESISTOR CH 1/10W 33K	2	
R485,86		ERJ6GEYJ102	M.RESISTOR CH 1/10W 1K	2	
R487		ERJ6GEYJ222	M.RESISTOR CH 1/10W 2.2K	1	
R488		ERJ6GEYJ221	M.RESISTOR CH 1/10W 220	1	
R489		ERJ6GEYJ392	M.RESISTOR CH 1/10W 3.9K	1	
R490		ERJ6GEYJ470	M.RESISTOR CH 1/10W 47	1	
R491		ERJ6GEYJ333	M.RESISTOR CH 1/10W 33K	1	
R492		ERJ6GEYJ471	M.RESISTOR CH 1/10W 470	1	
R493		ERJ6GEYJ152	M.RESISTOR CH 1/10W 1.5K	1	
R494,95		ERJ6GEYJ101	M.RESISTOR CH 1/10W 100	2	
R496		ERJ6GEYJ222	M.RESISTOR CH 1/10W 2.2K	1	
R497		ERJ6GEYJ102	M.RESISTOR CH 1/10W 1K	1	
R498		ERJ6GEYJ101	M.RESISTOR CH 1/10W 100	1	
R499		ERJ6GEYJ332	M.RESISTOR CH 1/10W 3.3K	1	
R500		ERJ6GEYJ223	M.RESISTOR CH 1/10W 22K	1	
R501		ERJ6GEYJ332	M.RESISTOR CH 1/10W 3.3K	1	
R502		ERJ6GEYJ472	M.RESISTOR CH 1/10W 4.7K	1	
R503		ERJ6GEYJ103	M.RESISTOR CH 1/10W 10K	1	
R504		ERJ6GEYJ683	M.RESISTOR CH 1/10W 68K	1	
R505,06		ERJ6GEYJ473	M.RESISTOR CH 1/10W 47K	2	
R508		ERJ6GEYJ471	M.RESISTOR CH 1/10W 470	1	
R509		ERJ6GEYJ221	M.RESISTOR CH 1/10W 220	1	

Ref.No.		Part No.	Part Name & Description	Pcs	Remarks
R510		ERJ6GEYJ392	M.RESISTOR CH 1/10W 3.9K	1	
R511		VRE0034E27B	M.RESISTOR CH 1/10W 1.87K	1	
R512		VRE0034E751	M.RESISTOR CH 1/10W 750	1	
R513		ERJ6GEYJ332	M.RESISTOR CH 1/10W 3.3K	1	
R514		ERJ6GEYJ152	M.RESISTOR CH 1/10W 1.5K	1	
R515		ERJ6GEYJ682	M.RESISTOR CH 1/10W 6.8K	1	
R516		ERJ6GEYG301	M.RESISTOR CH 1/10W 300	1	
R518		ERJ6GEYG471	M.RESISTOR CH 1/10W 470	1	
R519		ERJ6GEYJ332	M.RESISTOR CH 1/10W 3.3K	1	
R520		ERJ6GEYJ101	M.RESISTOR CH 1/10W 100	1	
R521		ERJ6GEYJ151	M.RESISTOR CH 1/10W 150	1	
R522		VRE0034E26A	M.RESISTOR CH 1/10W 182	1	
R523		ERJ6GEYJ331	M.RESISTOR CH 1/10W 330	1	
R524		VRE0034E89A	M.RESISTOR CH 1/10W 825	1	
R525		ERJ6GEYG331	M.RESISTOR CH 1/10W 330	1	
R526,27		ERJ6GEYJ470	M.RESISTOR CH 1/10W 47	2	
R528		ERJ6GEYJ101	M.RESISTOR CH 1/10W 100	1	
R529		ERJ6GEYJ102	M.RESISTOR CH 1/10W 1K	1	
R530		ERJ6GEYJ681	M.RESISTOR CH 1/10W 680	1	
R531,32		ERJ6GEYJ273	M.RESISTOR CH 1/10W 27K	2	
R533,34		ERJ6GEYJ183	M.RESISTOR CH 1/10W 18K	2	
R535,36		ERJ6GEYJ221	M.RESISTOR CH 1/10W 220	2	
R537		ERJ6GEYG223	M.RESISTOR CH 1/10W 22K	1	
R538		ERJ6GEYJ470	M.RESISTOR CH 1/10W 47	1	
R539		ERJ6GEYG331	M.RESISTOR CH 1/10W 330	1	
R540		VRE0034E26A	M.RESISTOR CH 1/10W 182	1	
R541		VRE0034E89A	M.RESISTOR CH 1/10W 825	1	
R542		VRE0034E59A	M.RESISTOR CH 1/10W 413	1	
R543		VRE0034E102	M.RESISTOR CH 1/10W 1K	1	
R544		ERJ6GEYJ392	M.RESISTOR CH 1/10W 3.9K	1	
R545		ERJ6GEYJ222	M.RESISTOR CH 1/10W 2.2K	1	
R546		ERJ6GEYJ470	M.RESISTOR CH 1/10W 47	1	
R547		ERJ6GEYJ222	M.RESISTOR CH 1/10W 2.2K	1	
R548		ERJ6GEYJ470	M.RESISTOR CH 1/10W 47	1	
R550		ERJ6GEYJ472	M.RESISTOR CH 1/10W 4.7K	1	
R551		ERJ6GEYJ473	M.RESISTOR CH 1/10W 47K	1	
R552		ERJ6GEYJ332	M.RESISTOR CH 1/10W 3.3K	1	
R553		ERJ6GEYJ471	M.RESISTOR CH 1/10W 470	1	
R554		ERJ6GEYJ102	M.RESISTOR CH 1/10W 1K	1	
R555		ERJ6GEYJ472	M.RESISTOR CH 1/10W 4.7K	1	
R556		ERJ6GEYJ222	M.RESISTOR CH 1/10W 2.2K	1	
R561-63		ERJ6GEYJ473	M.RESISTOR CH 1/10W 47K	3	
R564		ERJ6GEYJ222	M.RESISTOR CH 1/10W 2.2K	1	
R565		ERJ6GEYJ223	M.RESISTOR CH 1/10W 22K	1	
R566		ERJ6GEYJ222	M.RESISTOR CH 1/10W 2.2K	1	
R567		ERJ6GEYJ223	M.RESISTOR CH 1/10W 22K	1	
R568		ERJ6GEYJ331	M.RESISTOR CH 1/10W 330	1	
R569,70		ERJ6GEYJ470	M.RESISTOR CH 1/10W 47	2	
R571		ERJ6GEYJ152	M.RESISTOR CH 1/10W 1.5K	1	
R572		ERJ6GEYJ222	M.RESISTOR CH 1/10W 2.2K	1	
R573,74		ERJ6GEYJ470	M.RESISTOR CH 1/10W 47	2	
R575,76		ERJ6GEYJ222	M.RESISTOR CH 1/10W 2.2K	2	
R577		ERJ6GEYJ471	M.RESISTOR CH 1/10W 470	1	
R578		ERJ6GEYJ470	M.RESISTOR CH 1/10W 47	1	
R579		ERJ6GEYJ152	M.RESISTOR CH 1/10W 1.5K	1	
R580		ERJ6GEYJ221	M.RESISTOR CH 1/10W 220	1	
R581		ERJ6GEYJ222	M.RESISTOR CH 1/10W 2.2K	1	
R582		ERJ6GEYJ682	M.RESISTOR CH 1/10W 6.8K	1	
R583		ERJ6GEYJ182	M.RESISTOR CH 1/10W 1.8K	1	
R584		ERJ6GEYJ471	M.RESISTOR CH 1/10W 470	1	
R585		ERJ6GEYJ332	M.RESISTOR CH 1/10W 3.3K	1	
R586		ERJ6GEYJ222	M.RESISTOR CH 1/10W 2.2K	1	
R587,88		ERJ6GEYJ224	M.RESISTOR CH 1/10W 220K	2	
R589		ERJ6GEYJ103	M.RESISTOR CH 1/10W 10K	1	
R590		ERJ6GEYJ332	M.RESISTOR CH 1/10W 3.3K	1	
R591		ERJ6GEYJ471	M.RESISTOR CH 1/10W 470	1	
R592		ERJ6GEYJ332	M.RESISTOR CH 1/10W 3.3K	1	
R593		ERJ6GEYJ273	M.RESISTOR CH 1/10W 27K	1	
R594		ERJ6GEYJ562	M.RESISTOR CH 1/10W 5.6K	1	
R595,96		ERJ6GEYK475	M.RESISTOR CH 1/10W 4.7M	2	
R597		ERJ6GEYJ272	M.RESISTOR CH 1/10W 2.7K	1	
R598		ERJ6GEYJ471	M.RESISTOR CH 1/10W 470	1	
R599		ERJ6GEYJ102	M.RESISTOR CH 1/10W 1K	1	
R600		ERJ6GEYJ472	M.RESISTOR CH 1/10W 4.7K	1	
R601		ERJ6GEYJ102	M.RESISTOR CH 1/10W 1K	1	

Refer to the P.C.BOARDS LIST, page 6-1-1, before using this page.

Ref.No.		Part No.	Part Name & Description	Pcs	Remarks
R602		ERJ6GEYJ472	M.RESISTOR CH 1/10W 4.7K	1	
R603,04		ERJ6GEYJ474	M.RESISTOR CH 1/10W 470K	2	
R605,06		ERJ6GEYK475	M.RESISTOR CH 1/10W 4.7M	2	
R607		ERJ6GEYJ223	M.RESISTOR CH 1/10W 22K	1	
R608,09		ERJ6GEYJ472	M.RESISTOR CH 1/10W 4.7K	2	
R610		ERJ6GEYJ104	M.RESISTOR CH 1/10W 100K	1	
R611		ERJ6GEYJ472	M.RESISTOR CH 1/10W 4.7K	1	
R612		ERJ6GEYJ471	M.RESISTOR CH 1/10W 470	1	
R613		ERJ6GEYJ223	M.RESISTOR CH 1/10W 22K	1	
R614		ERJ6GEYJ224	M.RESISTOR CH 1/10W 220K	1	
R615		ERJ6GEYJ103	M.RESISTOR CH 1/10W 10K	1	
R616		ERJ6GEYJ104	M.RESISTOR CH 1/10W 100K	1	
R617-19		ERJ6GEYJ103	M.RESISTOR CH 1/10W 10K	3	
R620		ERJ6GEYJ101	M.RESISTOR CH 1/10W 100	1	
R621,22		ERJ6GEYJ474	M.RESISTOR CH 1/10W 470K	2	
R623		ERJ6GEYJ153	M.RESISTOR CH 1/10W 15K	1	
R624-26		ERJ6GEYJ103	M.RESISTOR CH 1/10W 10K	3	
R627		ERJ6GEYJ472	M.RESISTOR CH 1/10W 4.7K	1	
R628		ERJ6GEYJ223	M.RESISTOR CH 1/10W 22K	1	
R629		ERJ6GEYJ472	M.RESISTOR CH 1/10W 4.7K	1	
R630,31		ERJ6GEYJ101	M.RESISTOR CH 1/10W 100	2	
R632		ERJ6GEYJ102	M.RESISTOR CH 1/10W 1K	1	
R633		ERDS2TJ331	C.RESISTOR 1/4W 330	1	
R635,36		ERJ6GEYJ470	M.RESISTOR CH 1/10W 47	2	
R637		ERJ6GEYJ102	M.RESISTOR CH 1/10W 1K	1	
R638		ERJ6GEY0R00	M.RESISTOR CH 1/10W 0	1	
R639,40		ERJ6GEYJ331	M.RESISTOR CH 1/10W 330	2	
R643		ERJ6GEYJ331	M.RESISTOR CH 1/10W 330	1	
R644,45		ERJ6GEYJ470	M.RESISTOR CH 1/10W 47	2	
R646		ERJ6GEYJ682	M.RESISTOR CH 1/10W 6.8K	1	
R647,48		ERJ6GEYJ221	M.RESISTOR CH 1/10W 220	2	
R649		ERJ6GEYJ682	M.RESISTOR CH 1/10W 6.8K	1	
R650-53		ERJ6GEYJ101	M.RESISTOR CH 1/10W 100	4	
R654,55		ERJ6GEYJ681	M.RESISTOR CH 1/10W 680	2	
R656		ERJ6GEYJ470	M.RESISTOR CH 1/10W 47	1	
R660		ERDS2TJ331	C.RESISTOR 1/4W 330	1	
R661		ERDS2TJ472	C.RESISTOR 1/4W 4.7K	1	
R701		ERJ6GEYJ470	M.RESISTOR CH 1/10W 47	1	
R702		ERJ6GEYJ102	M.RESISTOR CH 1/10W 1K	1	
R703		ERJ6GEYJ821	M.RESISTOR CH 1/10W 820	1	
R704		ERJ6GEY0R00	M.RESISTOR CH 1/10W 0	1	
R705		ERJ6GEYJ332	M.RESISTOR CH 1/10W 3.3K	1	
R712		ERJ6GEYJ470	M.RESISTOR CH 1/10W 47	1	
R723,24		ERJ6GEYJ101	M.RESISTOR CH 1/10W 100	2	
R725		ERJ6GEYJ102	M.RESISTOR CH 1/10W 1K	1	
R726		ERJ6GEYJ470	M.RESISTOR CH 1/10W 47	1	
R727		ERJ6GEYG471	M.RESISTOR CH 1/10W 470	1	
R728,29		ERJ6GEYJ470	M.RESISTOR CH 1/10W 47	2	
R730		ERJ6GEYG471	M.RESISTOR CH 1/10W 470	1	
R731		ERJ6GEYJ222	M.RESISTOR CH 1/10W 2.2K	1	
R732,33		ERJ6GEYG821	M.RESISTOR CH 1/10W 820	2	
R734		ERJ6GEYJ222	M.RESISTOR CH 1/10W 2.2K	1	
R735		ERJ6GEYJ470	M.RESISTOR CH 1/10W 47	1	
R736		ERJ6GEYJ271	M.RESISTOR CH 1/10W 270	1	
R737		ERJ6GEYJ332	M.RESISTOR CH 1/10W 3.3K	1	
R738		ERJ6GEYJ821	M.RESISTOR CH 1/10W 820	1	
R739		ERJ6GEYJ470	M.RESISTOR CH 1/10W 47	1	
R740		ERJ6GEYJ222	M.RESISTOR CH 1/10W 2.2K	1	
R741		ERJ6GEYJ272	M.RESISTOR CH 1/10W 2.7K	1	
R742		ERJ6GEYG331	M.RESISTOR CH 1/10W 330	1	
R743		ERJ6GEYJ153	M.RESISTOR CH 1/10W 15K	1	
R744		ERJ6GEYJ473	M.RESISTOR CH 1/10W 47K	1	
R745,46		ERJ6GEYJ220	M.RESISTOR CH 1/10W 22	2	
R747		ERJ6GEYJ470	M.RESISTOR CH 1/10W 47	1	
R748		ERJ6GEYJ152	M.RESISTOR CH 1/10W 1.5K	1	
R749		ERJ6GEYJ331	M.RESISTOR CH 1/10W 330	1	
R750		ERJ6GEYJ102	M.RESISTOR CH 1/10W 1K	1	
R751		ERJ6GEYJ221	M.RESISTOR CH 1/10W 220	1	
R752		ERJ6GEYJ222	M.RESISTOR CH 1/10W 2.2K	1	
R753		ERJ6GEYJ472	M.RESISTOR CH 1/10W 4.7K	1	
R754		ERJ6GEYJ103	M.RESISTOR CH 1/10W 10K	1	
R755		ERJ6GEYJ472	M.RESISTOR CH 1/10W 4.7K	1	
R756		ERJ6GEYJ682	M.RESISTOR CH 1/10W 6.8K	1	
R760		ERJ6GEYJ470	M.RESISTOR CH 1/10W 47	1	
R761		ERJ6GEYJ152	M.RESISTOR CH 1/10W 1.5K	1	

Ref.No.		Part No.	Part Name & Description	Pcs	Remarks
R762,63		ERJ6GEYG301	M.RESISTOR CH 1/10W 300	2	
R764		ERJ6GEYJ470	M.RESISTOR CH 1/10W 47	1	
R765		ERJ6GEYJ102	M.RESISTOR CH 1/10W 1K	1	
R766		ERJ6GEYJ681	M.RESISTOR CH 1/10W 680	1	
R767		ERJ6GEYJ102	M.RESISTOR CH 1/10W 1K	1	
R768		ERJ6GEYJ152	M.RESISTOR CH 1/10W 1.5K	1	
R769		ERJ6GEYJ470	M.RESISTOR CH 1/10W 47	1	
R770		ERJ6GEYJ221	M.RESISTOR CH 1/10W 220	1	
R771		ERJ6GEYJ222	M.RESISTOR CH 1/10W 2.2K	1	
R772		ERJ6GEYJ470	M.RESISTOR CH 1/10W 47	1	
R773		ERJ6GEYJ152	M.RESISTOR CH 1/10W 1.5K	1	
R774,75		ERJ6GEYJ331	M.RESISTOR CH 1/10W 330	2	
R776		ERJ6GEYJ470	M.RESISTOR CH 1/10W 47	1	
R777		ERJ6GEYJ222	M.RESISTOR CH 1/10W 2.2K	1	
R778		ERJ6GEYJ470	M.RESISTOR CH 1/10W 47	1	
R789		ERJ6GEYJ470	M.RESISTOR CH 1/10W 47	1	
R790-97		ERJ6GEYJ102	M.RESISTOR CH 1/10W 1K	8	
R798,99		ERJ6GEYJ332	M.RESISTOR CH 1/10W 3.3K	2	
R800		ERJ6GEYJ101	M.RESISTOR CH 1/10W 100	1	
R801,02		ERJ6GEYJ471	M.RESISTOR CH 1/10W 470	2	
R803		ERJ6GEYJ470	M.RESISTOR CH 1/10W 47	1	
R804,05		ERJ6GEYJ681	M.RESISTOR CH 1/10W 680	2	
R806,07		ERJ6GEYJ101	M.RESISTOR CH 1/10W 100	2	
R808		ERJ6GEYJ470	M.RESISTOR CH 1/10W 47	1	
R809		ERJ6GEYJ151	M.RESISTOR CH 1/10W 150	1	
R810,11		ERJ6GEYJ222	M.RESISTOR CH 1/10W 2.2K	2	
R812		ERJ6GEYJ470	M.RESISTOR CH 1/10W 47	1	
R813,14		ERJ6GEYJ222	M.RESISTOR CH 1/10W 2.2K	2	
R815,16		ERJ6GEYJ470	M.RESISTOR CH 1/10W 47	2	
R817-28		ERJ6GEYJ102	M.RESISTOR CH 1/10W 1K	12	
R829		ERJ6GEYJ683	M.RESISTOR CH 1/10W 68K	1	
R830,31		ERJ6GEYJ103	M.RESISTOR CH 1/10W 10K	2	
R832,33		ERJ6GEYJ150	M.RESISTOR CH 1/10W 15	2	
R834,35		ERJ6GEYJ332	M.RESISTOR CH 1/10W 3.3K	2	
R836		ERJ6GEYJ101	M.RESISTOR CH 1/10W 100	1	
R837		ERDS2TJ222	C.RESISTOR 1/4W 2.2K	1	
R838-40		ERJ6GEYJ102	M.RESISTOR CH 1/10W 1K	3	
R842		ERJ6GEYJ222	M.RESISTOR CH 1/10W 2.2K	1	
R843,44		ERJ6GEYJ471	M.RESISTOR CH 1/10W 470	2	
R845		ERJ6GEYJ470	M.RESISTOR CH 1/10W 47	1	
R846,47		ERJ6GEYJ333	M.RESISTOR CH 1/10W 33K	2	
R848,49		ERJ6GEYJ102	M.RESISTOR CH 1/10W 1K	2	
R850		ERJ6GEYJ222	M.RESISTOR CH 1/10W 2.2K	1	
R851		ERJ6GEYJ221	M.RESISTOR CH 1/10W 220	1	
R852		ERJ6GEYJ392	M.RESISTOR CH 1/10W 3.9K	1	
R853		ERJ6GEYJ470	M.RESISTOR CH 1/10W 47	1	
R854		ERJ6GEYJ471	M.RESISTOR CH 1/10W 470	1	
R855		ERJ6GEYJ152	M.RESISTOR CH 1/10W 1.5K	1	
R856,57		ERJ6GEYJ101	M.RESISTOR CH 1/10W 100	2	
R858		ERJ6GEYJ222	M.RESISTOR CH 1/10W 2.2K	1	
R859		ERJ6GEYJ102	M.RESISTOR CH 1/10W 1K	1	
R860		ERJ6GEYJ101	M.RESISTOR CH 1/10W 100	1	
R861		ERJ6GEYJ332	M.RESISTOR CH 1/10W 3.3K	1	
R862		ERJ6GEYJ223	M.RESISTOR CH 1/10W 22K	1	
R863		ERJ6GEYJ332	M.RESISTOR CH 1/10W 3.3K	1	
R864		ERJ6GEYJ472	M.RESISTOR CH 1/10W 4.7K	1	
R865		ERJ6GEYJ103	M.RESISTOR CH 1/10W 10K	1	
R866		ERJ6GEYJ683	M.RESISTOR CH 1/10W 68K	1	
R867		ERJ6GEYJ473	M.RESISTOR CH 1/10W 47K	1	
R868		ERJ6GEYJ471	M.RESISTOR CH 1/10W 470	1	
R870		ERJ6GEYJ471	M.RESISTOR CH 1/10W 470	1	
R871		ERJ6GEYJ221	M.RESISTOR CH 1/10W 220	1	
R872		ERJ6GEYJ392	M.RESISTOR CH 1/10W 3.9K	1	
R873		VRE0034E27B	M.RESISTOR CH 1/10W 1.87K	1	
R874		VRE0034E751	M.RESISTOR CH 1/10W 750	1	
R875		ERJ6GEYJ332	M.RESISTOR CH 1/10W 3.3K	1	
R876		ERJ6GEYJ152	M.RESISTOR CH 1/10W 1.5K	1	
R878		ERJ6GEYG301	M.RESISTOR CH 1/10W 300	1	
R879		ERJ6GEYG471	M.RESISTOR CH 1/10W 470	1	
R880		ERJ6GEYJ332	M.RESISTOR CH 1/10W 3.3K	1	
R881		ERJ6GEYJ101	M.RESISTOR CH 1/10W 100	1	
R882		ERJ6GEYJ151	M.RESISTOR CH 1/10W 150	1	
R883		VRE0034E26A	M.RESISTOR CH 1/10W 182	1	
R884		ERJ6GEYJ331	M.RESISTOR CH 1/10W 330	1	
R885		VRE0034E89A	M.RESISTOR CH 1/10W 825	1	

Refer to the P.C.BOARDS LIST, page 6-1-1, before using this page.

Ref.No.		Part No.	Part Name & Description	Pcs	Remarks
R886,87		ERJ6GEYJ470	M.RESISTOR CH 1/10W 47	2	
R888		ERJ6GEYJ331	M.RESISTOR CH 1/10W 330	1	
R888		ERJ6GEYJ331	M.RESISTOR CH 1/10W 330	1	
R889		ERJ6GEYJ681	M.RESISTOR CH 1/10W 680	1	
R890		ERJ6GEYJ273	M.RESISTOR CH 1/10W 27K	1	
R891		ERJ6GEYJ183	M.RESISTOR CH 1/10W 18K	1	
R892		ERJ6GEYJ221	M.RESISTOR CH 1/10W 220	1	
R893		ERJ6GEYJ273	M.RESISTOR CH 1/10W 27K	1	
R894		ERJ6GEYJ183	M.RESISTOR CH 1/10W 18K	1	
R895		ERJ6GEYJ221	M.RESISTOR CH 1/10W 220	1	
R896		ERJ6GEYG223	M.RESISTOR CH 1/10W 22K	1	
R897		ERJ6GEYJ470	M.RESISTOR CH 1/10W 47	1	
R898		VRE0034E26A	M.RESISTOR CH 1/10W 182	1	
R899		VRE0034E89A	M.RESISTOR CH 1/10W 825	1	
R900		ERJ6GEYG331	M.RESISTOR CH 1/10W 330	1	
R901		VRE0034E59A	M.RESISTOR CH 1/10W 413	1	
R902		VRE0034E102	M.RESISTOR CH 1/10W 1K	1	
R903		ERJ6GEYJ392	M.RESISTOR CH 1/10W 3.9K	1	
R904		ERJ6GEYJ470	M.RESISTOR CH 1/10W 47	1	
R905,06		ERJ6GEYJ222	M.RESISTOR CH 1/10W 2.2K	2	
R907		ERJ6GEYJ470	M.RESISTOR CH 1/10W 47	1	
R909		ERJ6GEYJ472	M.RESISTOR CH 1/10W 4.7K	1	
R910		ERJ6GEYJ473	M.RESISTOR CH 1/10W 47K	1	
R911		ERJ6GEYJ332	M.RESISTOR CH 1/10W 3.3K	1	
R912		ERJ6GEYJ471	M.RESISTOR CH 1/10W 470	1	
R913		ERJ6GEYJ102	M.RESISTOR CH 1/10W 1K	1	
R914		ERJ6GEYJ472	M.RESISTOR CH 1/10W 4.7K	1	
R915		ERJ6GEYJ222	M.RESISTOR CH 1/10W 2.2K	1	
R920		ERJ6GEYJ331	M.RESISTOR CH 1/10W 330	1	
R921,22		ERJ6GEYJ470	M.RESISTOR CH 1/10W 47	2	
R923		ERJ6GEYJ152	M.RESISTOR CH 1/10W 1.5K	1	
R924		ERJ6GEYJ222	M.RESISTOR CH 1/10W 2.2K	1	
R925,26		ERJ6GEYJ470	M.RESISTOR CH 1/10W 47	2	
R927,28		ERJ6GEYJ222	M.RESISTOR CH 1/10W 2.2K	2	
R929		ERJ6GEYJ471	M.RESISTOR CH 1/10W 470	1	
R930		ERJ6GEYJ470	M.RESISTOR CH 1/10W 47	1	
R931		ERJ6GEYJ152	M.RESISTOR CH 1/10W 1.5K	1	
R932		ERJ6GEYJ221	M.RESISTOR CH 1/10W 220	1	
R933		ERJ6GEYJ222	M.RESISTOR CH 1/10W 2.2K	1	
R934		ERJ6GEYJ682	M.RESISTOR CH 1/10W 6.8K	1	
R935		ERJ6GEYJ182	M.RESISTOR CH 1/10W 1.8K	1	
R936		ERJ6GEYJ471	M.RESISTOR CH 1/10W 470	1	
R937,38		ERJ6GEYJ332	M.RESISTOR CH 1/10W 3.3K	2	
R939		ERJ6GEYJ471	M.RESISTOR CH 1/10W 470	1	
R940		ERJ6GEYJ103	M.RESISTOR CH 1/10W 10K	1	
R941		ERJ6GEYJ683	M.RESISTOR CH 1/10W 68K	1	
R942		ERJ6GEYJ222	M.RESISTOR CH 1/10W 2.2K	1	
R943		ERJ6GEYJ273	M.RESISTOR CH 1/10W 27K	1	
R944		ERJ6GEYJ682	M.RESISTOR CH 1/10W 6.8K	1	
R945,46		ERJ6GEYK475	M.RESISTOR CH 1/10W 4.7M	2	
R947		ERJ6GEYJ272	M.RESISTOR CH 1/10W 2.7K	1	
R948		ERJ6GEYJ471	M.RESISTOR CH 1/10W 470	1	
R949		ERJ6GEYJ102	M.RESISTOR CH 1/10W 1K	1	
R950		ERJ6GEYJ472	M.RESISTOR CH 1/10W 4.7K	1	
R951		ERJ6GEYJ102	M.RESISTOR CH 1/10W 1K	1	
R952		ERJ6GEYJ472	M.RESISTOR CH 1/10W 4.7K	1	
R953,54		ERJ6GEYJ105	M.RESISTOR CH 1/10W 1M	2	
R955,56		ERJ6GEYK475	M.RESISTOR CH 1/10W 4.7M	2	
R957,58		ERJ6GEYJ472	M.RESISTOR CH 1/10W 4.7K	2	
R959		ERJ6GEYJ471	M.RESISTOR CH 1/10W 470	1	
R960		ERJ6GEYJ153	M.RESISTOR CH 1/10W 15K	1	
R961-63		ERJ6GEYJ103	M.RESISTOR CH 1/10W 10K	3	
R964		ERJ6GEYJ101	M.RESISTOR CH 1/10W 100	1	
R965		ERJ6GEYJ102	M.RESISTOR CH 1/10W 1K	1	
R966-68		ERJ6GEYJ103	M.RESISTOR CH 1/10W 10K	3	
R969,70		ERJ6GEYJ472	M.RESISTOR CH 1/10W 4.7K	2	
R971		ERJ6GEYJ223	M.RESISTOR CH 1/10W 22K	1	
R972		ERDS2TJ331	C.RESISTOR 1/4W 330	1	
R973		ERJ6GEYJ102	M.RESISTOR CH 1/10W 1K	1	
R974		ERJ6GEY0R00	M.RESISTOR CH 1/10W 0	1	
R975,76		ERJ6GEYJ470	M.RESISTOR CH 1/10W 47	2	
R977		ERJ6GEYJ682	M.RESISTOR CH 1/10W 6.8K	1	
R978,79		ERJ6GEYJ221	M.RESISTOR CH 1/10W 220	2	
R980		ERJ6GEYJ682	M.RESISTOR CH 1/10W 6.8K	1	
R981,82		ERJ6GEYJ101	M.RESISTOR CH 1/10W 100	2	

Ref.No.		Part No.	Part Name & Description	Pcs	Remarks
R983,84		ERJ6GEYJ681	M.RESISTOR CH 1/10W 680	2	
R985		ERJ6GEYJ470	M.RESISTOR CH 1/10W 47	1	
R986,87		ERJ6GEYJ331	M.RESISTOR CH 1/10W 330	2	
R989		ERJ6GEYJ472	M.RESISTOR CH 1/10W 4.7K	1	
R993		ERDS2TJ331	C.RESISTOR 1/4W 330	1	
R994		ERDS2TJ472	C.RESISTOR 1/4W 4.7K	1	
SW304		VSS0126	SWITCH	1	
SW305,06		VSS0207	SWITCH	2	
SW704		VSS0126	SWITCH	1	
TP301-04		VJR0646	TEST POINT	4	
TP306-13		VJR0646	TEST POINT	8	
TP315		VJR0646	TEST POINT	1	
TP317		VJR0646	TEST POINT	1	
TP701-10		VJR0646	TEST POINT	10	
TP712		VJR0646	TEST POINT	1	
TPG301-03		VJR0646	TEST POINT	3	
TPG701-03		VJR0646	TEST POINT	3	
VC301		ECV1ZW10X53T	V.CAPACITOR 10P	1	
VC701		ECV1ZW20X53T	V.CAPACITOR 20P	1	
VL301,02		EIR7QF016B	COIL	2	
VL303		EIR7QF015B	COIL	1	
VL701		EIR7QF016B	COIL	1	
VL702		EIR7QF015B	COIL	1	
VR301		VRV0109B501	V.RESISTOR 500	1	
VR302		VRV0109B102	V.RESISTOR 1K	1	
VR303		VRV0109B501	V.RESISTOR 500	1	
VR304		VRV0109B102	V.RESISTOR 1K	1	
VR309		VRV0109B101	V.RESISTOR 100	1	
VR310		VRV0109B502	V.RESISTOR 5K	1	
VR311		VRV0109B501	V.RESISTOR 500	1	
VR312		VRV0064B104	V.RESISTOR 100K	1	
VR315,16		VRV0064B502	V.RESISTOR 5K	2	
VR317		VRV0109B501	V.RESISTOR 500	1	
VR318		VRV0109B203	V.RESISTOR 20K	1	
VR319,20		VRV0109B102	V.RESISTOR 1K	2	
VR321		VRV0109B203	V.RESISTOR 20K	1	
VR322		VRV0109B102	V.RESISTOR 1K	1	
VR323		VRV0109B203	V.RESISTOR 20K	1	
VR324		VRV0109B102	V.RESISTOR 1K	1	
VR325		VRV0109B202	V.RESISTOR 2K	1	
VR326		VRV0109B102	V.RESISTOR 1K	1	
VR327		VRV0064B203	V.RESISTOR 20K	1	
VR328		VRV0109B203	V.RESISTOR 20K	1	
VR329		VRV0112B504	V.RESISTOR 100K	1	
VR331		VRV0109B103	V.RESISTOR 10K	1	
VR701,02		VRV0109B501	V.RESISTOR 500	2	
VR712,13		VRV0064B502	V.RESISTOR 5K	2	
VR714		VRV0109B501	V.RESISTOR 500	1	
VR715		VRV0109B203	V.RESISTOR 20K	1	
VR716,17		VRV0109B102	V.RESISTOR 1K	2	
VR718		VRV0109B203	V.RESISTOR 20K	1	
VR719		VRV0109B102	V.RESISTOR 1K	1	
VR720		VRV0109B203	V.RESISTOR 20K	1	
VR721		VRV0109B102	V.RESISTOR 1K	1	
VR722		VRV0109B202	V.RESISTOR 2K	1	
VR723		VRV0109B102	V.RESISTOR 1K	1	
VR724		VRV0064B203	V.RESISTOR 20K	1	
VR725		VRV0109B504	V.RESISTOR 500K	1	
VR726		VRV0109B103	V.RESISTOR 10K	1	

Refer to the P.C.BOARDS LIST, page 6-1-1, before using this page.

Ref.No.		Part No.	Part Name & Description	Pcs	Remarks
			MISCELLANEOUS		
		VML2143	CARD PULLER	1	
		VML2144	CARD PULLER	1	
		VMS4174	PIN	6	
		VMZ1547	BARRIER	1	
		VSC3056	SHIELD CASE	1	
		VXA3966	P.C.B. SHIELD PLATE	1	
		XNG26E	NUT	4	
		XYNV3+K6FR	SCREW	6	
		XYN26+C12	SCREW	4	

Refer to the P.C.BOARDS LIST, page 6-1-1, before using this page.

Ref.No.		Part No.	Part Name & Description	Pcs	Remarks
	■	VEP83099A	P.C.BOARD W/COMPONENT		FOR AU-65-P
			W4 DEC & CTCM		
			CAPACITORS		
C1		ECEA1HN010S	E.CAPACITOR 50V 1U	1	
C2,C3		ECEA0JN101S	E.CAPACITOR 6.3V 100U	2	
C4,C5		ECUM1H050DCN	C.CAPACITOR CH 50V 50P	2	
C6		ECUM1H103KBN	C.CAPACITOR CH 50V 0.01U	1	
C7		ECEA1CU470	E.CAPACITOR 16V 47U	1	
C8		ECUM1H103KBN	C.CAPACITOR CH 50V 0.01U	1	
C9		ECEA1CU470	E.CAPACITOR 16V 47U	1	
C10		ECUM1H103KBN	C.CAPACITOR CH 50V 0.01U	1	
C11		ECEA1CN101S	E.CAPACITOR 16V 100U	1	
C12		ECUM1H103KBN	C.CAPACITOR CH 50V 0.01U	1	
C13		ECEA1CU470	E.CAPACITOR 16V 47U	1	
C14,15		ECUM1H103KBN	C.CAPACITOR CH 50V 0.01U	2	
C16		ECUM1H820JCN	C.CAPACITOR CH 50V 82P	1	
C17		ECUM1H103KBN	C.CAPACITOR CH 50V 0.01U	1	
C18		ECEA1CU470	E.CAPACITOR 16V 47U	1	
C19		ECUM1H180JCN	C.CAPACITOR CH 50V 18P	1	
C20		ECUM1H820JCN	C.CAPACITOR CH 50V 82P	1	
C21,22		ECUM1H104KBM	C.CAPACITOR CH 50V 0.1U	2	
C23		ECEA1HN010S	E.CAPACITOR 50V 1U	1	
C24		ECUM1H101JCN	C.CAPACITOR CH 50V 100P	1	
C25		ECUM1H103KBN	C.CAPACITOR CH 50V 0.01U	1	
C26		ECEA1CU470	E.CAPACITOR 16V 47U	1	
C27		ECUM1H103KBN	C.CAPACITOR CH 50V 0.01U	1	
C28		ECEA1CU470	E.CAPACITOR 16V 47U	1	
C29		ECUM1H680JCN	C.CAPACITOR CH 50V 68P	1	
C30-36		ECUM1H103KBN	C.CAPACITOR CH 50V 0.01U	7	
C38		ECUM1H103KBN	C.CAPACITOR CH 50V 0.01U	1	
C40		ECUM1H103KBN	C.CAPACITOR CH 50V 0.01U	1	
C41		ECUM1H680JCN	C.CAPACITOR CH 50V 68P	1	
C42,43		ECUM1H103KBN	C.CAPACITOR CH 50V 0.01U	2	
C44		ECEA1CU470	E.CAPACITOR 16V 47U	1	
C45		ECUM1H103KBN	C.CAPACITOR CH 50V 0.01U	1	
C46		ECEA1CU470	E.CAPACITOR 16V 47U	1	
C48		ECUM1H330JCN	C.CAPACITOR CH 50V 33P	1	
C49		ECEA1AU220	E.CAPACITOR 10V 22U	1	
C50,51		ECUM1H103KBN	C.CAPACITOR CH 50V 0.01U	2	
C52		ECEA1HU010	E.CAPACITOR 50V 1U	1	
C53,54		ECUM1H103KBN	C.CAPACITOR CH 50V 0.01U	2	
C55		ECEA1CU470	E.CAPACITOR 16V 47U	1	
C56		ECUM1H103KBN	C.CAPACITOR CH 50V 0.01U	1	
C57		ECEA1CU470	E.CAPACITOR 16V 47U	1	
C58		ECUM1H330JCN	C.CAPACITOR CH 50V 33P	1	
C59		ECEA1AU330	E.CAPACITOR 10V 33U	1	
C60		ECUM1H330JCN	C.CAPACITOR CH 50V 33P	1	
C61		ECEA1AU330	E.CAPACITOR 10V 33U	1	
C62		ECUM1H102JCN	C.CAPACITOR CH 50V 1000P	1	
C63		ECEA1AU330	E.CAPACITOR 10V 33U	1	
C64		ECUM1H220JCN	C.CAPACITOR CH 50V 22P	1	
C65		ECUM1H100DCN	C.CAPACITOR CH 50V 10P	1	
C66		ECEA1CU221	E.CAPACITOR 16V 220U	1	
C67		ECUM1H103KBN	C.CAPACITOR CH 50V 0.01U	1	
C68		ECEA1CU470	E.CAPACITOR 16V 47U	1	
C69		ECUM1H103KBN	C.CAPACITOR CH 50V 0.01U	1	
C70		ECEA1CU470	E.CAPACITOR 16V 47U	1	
C72		ECUM1H560JCN	C.CAPACITOR CH 50V 56P	1	
C73		ECUM1H680JCN	C.CAPACITOR CH 50V 68P	1	
C74		ECUM1H220JCN	C.CAPACITOR CH 50V 22P	1	
C75		ECUM1H560JCN	C.CAPACITOR CH 50V 56P	1	
C76		ECUM1H103KBN	C.CAPACITOR CH 50V 0.01U	1	
C77		ECUM1H100DCN	C.CAPACITOR CH 50V 10P	1	
C78,79		ECUM1H103KBN	C.CAPACITOR CH 50V 0.01U	2	
C80		ECEA1HU010	E.CAPACITOR 50V 1U	1	
C81		ECUM1H103KBN	C.CAPACITOR CH 50V 0.01U	1	
C82		ECUM1H330JCN	C.CAPACITOR CH 50V 33P	1	
C83		ECEA1AU330	E.CAPACITOR 10V 33U	1	
C84		ECUM1H330JCN	C.CAPACITOR CH 50V 33P	1	
C85		ECEA1AU330	E.CAPACITOR 10V 33U	1	
C86		ECUM1H102JCN	C.CAPACITOR CH 50V 1000P	1	
C87		ECUM1H220JCN	C.CAPACITOR CH 50V 22P	1	
C88		ECUM1H100DCN	C.CAPACITOR CH 50V 10P	1	
C89		ECEA1CU221	E.CAPACITOR 16V 220U	1	
C90		ECUM1H103KBN	C.CAPACITOR CH 50V 0.01U	1	
C91		ECUM1H470JCN	C.CAPACITOR CH 50V 47P	1	
C92		ECUM1H103KBN	C.CAPACITOR CH 50V 0.01U	1	
C93		ECUM1H470JCN	C.CAPACITOR CH 50V 47P	1	
C94		ECUM1H080DCN	C.CAPACITOR CH 50V 80P	1	
C95		ECUM1H560JCN	C.CAPACITOR CH 50V 56P	1	
C96		ECUM1H680JCN	C.CAPACITOR CH 50V 68P	1	
C97-99		ECEA1HNR47S	E.CAPACITOR 50V 0.47U	3	
C100-02		ECUM1H390JCN	C.CAPACITOR CH 50V 39P	3	
C103-05		ECUM1H104KBM	C.CAPACITOR CH 50V 0.1U	3	
C107		ECEA1EN4R7S	E.CAPACITOR 25V 4.7U	1	
C109		ECEA1EN4R7S	E.CAPACITOR 25V 4.7U	1	
C110		ECUM1H103KBN	C.CAPACITOR CH 50V 0.01U	1	
C112		ECUM1H103KBN	C.CAPACITOR CH 50V 0.01U	1	
C113		ECEA1CU470	E.CAPACITOR 16V 47U	1	
C114,15		ECUM1H470JCN	C.CAPACITOR CH 50V 47P	2	
C116		ECUM1H103KBN	C.CAPACITOR CH 50V 0.01U	1	
C118		ECUM1H103KBN	C.CAPACITOR CH 50V 0.01U	1	
C120		ECUM1H101JCN	C.CAPACITOR CH 50V 100P	1	
C121		ECUM1H103KBN	C.CAPACITOR CH 50V 0.01U	1	
C122		ECEA1CU470	E.CAPACITOR 16V 47U	1	
C123		ECUM1H820JCN	C.CAPACITOR CH 50V 82P	1	
C124		ECUM1H103KBN	C.CAPACITOR CH 50V 0.01U	1	
C125		ECUM1H104KBM	C.CAPACITOR CH 50V 0.1U	1	
C140		ECUM1H680JCN	C.CAPACITOR CH 50V 68P	1	
C141,42		ECUM1H103KBN	C.CAPACITOR CH 50V 0.01U	2	
C161		ECUM1E104ZFN	C.CAPACITOR CH 25V 0.1U	1	
C164		ECUM1H103KBN	C.CAPACITOR CH 50V 0.01U	1	
C165		ECEA1CU100	E.CAPACITOR 16V 10U	1	
C166		ECUM1H103KBN	C.CAPACITOR CH 50V 0.01U	1	
C167		ECEA1CU100	E.CAPACITOR 16V 10U	1	
C168		ECUM1E104ZFN	C.CAPACITOR CH 25V 0.1U	1	
C169		ECUM1H103KBN	C.CAPACITOR CH 50V 0.01U	1	
C170		ECEA1CU100	E.CAPACITOR 16V 10U	1	
C171		ECUM1E104ZFN	C.CAPACITOR CH 25V 0.1U	1	
C172		ECUM1H103KBN	C.CAPACITOR CH 50V 0.01U	1	
C173		ECEA1CU100	E.CAPACITOR 16V 10U	1	
C174		ECUM1E104ZFN	C.CAPACITOR CH 25V 0.1U	1	
C175		ECUM1H103KBN	C.CAPACITOR CH 50V 0.01U	1	
C176		ECEA1CU100	E.CAPACITOR 16V 10U	1	
C183		ECUM1H103KBN	C.CAPACITOR CH 50V 0.01U	1	
C184		ECUM1H101JCN	C.CAPACITOR CH 50V 100P	1	
C185		ECEA1CU470	E.CAPACITOR 16V 47U	1	
C195		ECUM1H101JCN	C.CAPACITOR CH 50V 100P	1	
C201,02		ECUM1H103KBN	C.CAPACITOR CH 50V 0.01U	2	
C203		ECEA1CU470	E.CAPACITOR 16V 47U	1	
C204		ECUM1H103KBN	C.CAPACITOR CH 50V 0.01U	1	
C205		ECEA1CU470	E.CAPACITOR 16V 47U	1	
C206		ECQM1H104JF	P.CAPACITOR 50V 0.1U	1	
C207		ECQM1H103JF	P.CAPACITOR 50V 0.01U	1	
C208		ECQM1H104JF	P.CAPACITOR 50V 0.1U	1	
C209		ECUM1H104KBM	C.CAPACITOR CH 50V 0.1U	1	
C210-12		ECUM1H103KBN	C.CAPACITOR CH 50V 0.01U	3	
C218		ECUM1H471JCN	C.CAPACITOR CH 50V 470P	1	
C219		ECUM1H103KBN	C.CAPACITOR CH 50V 0.01U	1	
C220		ECEA1CU470	E.CAPACITOR 16V 47U	1	
C221		ECUM1H103KBN	C.CAPACITOR CH 50V 0.01U	1	
C222		ECEA1CU470	E.CAPACITOR 16V 47U	1	
C223		ECUM1H020CCN	C.CAPACITOR CH 50V 2P	1	
C224,25		ECUM1H470JCN	C.CAPACITOR CH 50V 47P	2	
C226		ECUM1H560JCN	C.CAPACITOR CH 50V 56P	1	
C227-31		ECUM1H103KBN	C.CAPACITOR CH 50V 0.01U	5	
C232		ECUM1H331JCN	C.CAPACITOR CH 50V 330P	1	
C233-35		ECUM1H104KBM	C.CAPACITOR CH 50V 0.1U	3	
C238		ECUM1H103KBN	C.CAPACITOR CH 50V 0.01U	1	
C240		ECUM1H103KBN	C.CAPACITOR CH 50V 0.01U	1	
C241		ECUM1H104KBM	C.CAPACITOR CH 50V 0.1U	1	
C244		ECEA1CN221S	E.CAPACITOR 16V 220U	1	

Refer to the P.C.BOARDS LIST, page 6-1-1, before using this page.

Ref.No.		Part No.	Part Name & Description	Pcs	Remarks
C245		ECUM1H080DCN	C.CAPACITOR CH 50V 80P	1	
C246		ECUM1H020CCN	C.CAPACITOR CH 50V 2P	1	
C247		ECUM1H103KBN	C.CAPACITOR CH 50V 0.01U	1	
C248		ECEA1CU470	E.CAPACITOR 16V 47U	1	
C249		ECUM1H103KBN	C.CAPACITOR CH 50V 0.01U	1	
C250		ECEA1CU470	E.CAPACITOR 16V 47U	1	
C251		ECUM1H103KBN	C.CAPACITOR CH 50V 0.01U	1	
C252		ECEA1CU470	E.CAPACITOR 16V 47U	1	
C273		ECUM1H103KBN	C.CAPACITOR CH 50V 0.01U	1	
C275,76		ECUM1H103KBN	C.CAPACITOR CH 50V 0.01U	2	
C280		ECUM1H103KBN	C.CAPACITOR CH 50V 0.01U	1	
C284		ECUM1H103KBN	C.CAPACITOR CH 50V 0.01U	1	
C286		ECEA1CU470	E.CAPACITOR 16V 47U	1	
C287		ECUM1H103KBN	C.CAPACITOR CH 50V 0.01U	1	
C288		ECUM1H220JCN	C.CAPACITOR CH 50V 22P	1	
C289		ECUM1H060DCN	C.CAPACITOR CH 50V 6P	1	
C290		ECUM1H820JCN	C.CAPACITOR CH 50V 82P	1	
C291		ECUM1H080DCN	C.CAPACITOR CH 50V 80P	1	
C292		ECUM1H470JCN	C.CAPACITOR CH 50V 47P	1	
C293		ECEA1CU470	E.CAPACITOR 16V 47U	1	
C294		ECEA0JU101	E.CAPACITOR 6.3V 100U	1	
C295		ECEA0JN101S	E.CAPACITOR 6.3V 100U	1	
C296		ECUM1H220JCN	C.CAPACITOR CH 50V 22P	1	
C297		ECUM1H060DCN	C.CAPACITOR CH 50V 6P	1	
C298		ECUM1H820JCN	C.CAPACITOR CH 50V 82P	1	
C299		ECUM1H080DCN	C.CAPACITOR CH 50V 80P	1	
C300		ECUM1H470JCN	C.CAPACITOR CH 50V 47P	1	
C301		ECEA1CU470	E.CAPACITOR 16V 47U	1	
C302		ECEA0JU101	E.CAPACITOR 6.3V 100U	1	
C303		ECEA0JN101S	E.CAPACITOR 6.3V 100U	1	
C304		ECEA1CU470	E.CAPACITOR 16V 47U	1	
C305		ECUM1H103KBN	C.CAPACITOR CH 50V 0.01U	1	
C306		ECEA1CU470	E.CAPACITOR 16V 47U	1	
C307,08		ECUM1H103KBN	C.CAPACITOR CH 50V 0.01U	2	
C310		ECUM1H103KBN	C.CAPACITOR CH 50V 0.01U	1	
C311		ECEA1HNR47S	E.CAPACITOR 50V 0.47U	1	
C312		ECUM1C104KBN	C.CAPACITOR CH 16V 0.1U	1	
C313		ECUM1H103KBN	C.CAPACITOR CH 50V 0.01U	1	
C316-18		ECUM1H103KBN	C.CAPACITOR CH 50V 0.01U	3	
C319		ECUM1H220JCN	C.CAPACITOR CH 50V 22P	1	
C327		ECEA0JN101S	E.CAPACITOR 6.3V 100U	1	
C328		ECEA1CU470	E.CAPACITOR 16V 47U	1	
C329		ECUM1H103KBN	C.CAPACITOR CH 50V 0.01U	1	
C401		ECEA1CU470	E.CAPACITOR 16V 47U	1	
C402,03		ECUM1H103KBN	C.CAPACITOR CH 50V 0.01U	2	
C404		ECUM1H102JCN	C.CAPACITOR CH 50V 1000P	1	
C405		ECUM1H103KBN	C.CAPACITOR CH 50V 0.01U	1	
C406		ECUM1H121JCN	C.CAPACITOR CH 50V 120P	1	
C407		ECUM1H560JCN	C.CAPACITOR CH 50V 56P	1	
C408		ECUM1H103KBN	C.CAPACITOR CH 50V 0.01U	1	
C409		ECUM1H121JCN	C.CAPACITOR CH 50V 120P	1	
C410		ECUM1H103KBN	C.CAPACITOR CH 50V 0.01U	1	
C411		ECUM1H121JCN	C.CAPACITOR CH 50V 120P	1	
C412		ECUM1H080DCN	C.CAPACITOR CH 50V 80P	1	
C413		ECUM1H390JCN	C.CAPACITOR CH 50V 39P	1	
C501		ECUM1H103KBN	C.CAPACITOR CH 50V 0.01U	1	
C502		ECEA1CU470	E.CAPACITOR 16V 47U	1	
C503		ECUM1H103KBN	C.CAPACITOR CH 50V 0.01U	1	
C504		ECEA1CU470	E.CAPACITOR 16V 47U	1	
C505		ECUM1H330JCN	C.CAPACITOR CH 50V 33P	1	
C509		ECUM1H104KBM	C.CAPACITOR CH 50V 0.1U	1	
C510		ECEA1CU470	E.CAPACITOR 16V 47U	1	
C511		ECUM1H104KBM	C.CAPACITOR CH 50V 0.1U	1	
C513		ECUM1H103KBN	C.CAPACITOR CH 50V 0.01U	1	
C517		ECUM1H330JCN	C.CAPACITOR CH 50V 33P	1	
C520		ECUM1H103KBN	C.CAPACITOR CH 50V 0.01U	1	
C521		ECUM1H104KBM	C.CAPACITOR CH 50V 0.1U	1	
C522		ECEA1CU470	E.CAPACITOR 16V 47U	1	
C523		ECUM1H104KBM	C.CAPACITOR CH 50V 0.1U	1	
C524		ECUM1H103KBN	C.CAPACITOR CH 50V 0.01U	1	
C525		ECEA1CU470	E.CAPACITOR 16V 47U	1	
C526		ECUM1H680JCN	C.CAPACITOR CH 50V 68P	1	
C527		ECUM1H180JCN	C.CAPACITOR CH 50V 18P	1	
C528		ECUM1H104KBM	C.CAPACITOR CH 50V 0.1U	1	
C529		ECUM1H680JCN	C.CAPACITOR CH 50V 68P	1	

Ref.No.		Part No.	Part Name & Description	Pcs	Remarks
C530		ECUM1H060DCN	C.CAPACITOR CH 50V 6P	1	
C531		ECUM1H103KBN	C.CAPACITOR CH 50V 0.01U	1	
C532		ECEA1CU470	E.CAPACITOR 16V 47U	1	
C533,34		ECUM1H390JCN	C.CAPACITOR CH 50V 39P	2	
C535		ECUM1H270JCN	C.CAPACITOR CH 50V 27P	1	
C536		ECUM1H470JCN	C.CAPACITOR CH 50V 47P	1	
C537		ECUM1H104KBM	C.CAPACITOR CH 50V 0.1U	1	
C540		ECUM1H103KBN	C.CAPACITOR CH 50V 0.01U	1	
C541		ECEA1CU470	E.CAPACITOR 16V 47U	1	
C542		ECUM1H103KBN	C.CAPACITOR CH 50V 0.01U	1	
C543		ECEA1CU470	E.CAPACITOR 16V 47U	1	
C544		ECUM1H080DCN	C.CAPACITOR CH 50V 80P	1	
C545		ECEA1CU470	E.CAPACITOR 16V 47U	1	
C548		ECUM1H104KBM	C.CAPACITOR CH 50V 0.1U	1	
C550,51		ECUM1H103KBN	C.CAPACITOR CH 50V 0.01U	2	
C552		ECUM1H820JCN	C.CAPACITOR CH 50V 82P	1	
C553		ECUM1H390JCN	C.CAPACITOR CH 50V 39P	1	
C554		ECUM1H181JCN	C.CAPACITOR CH 50V 180P	1	
C555-57		ECUM1H104KBM	C.CAPACITOR CH 50V 0.1U	3	
C558		ECEA1HN010S	E.CAPACITOR 50V 1U	1	
C559-61		ECUM1H103KBN	C.CAPACITOR CH 50V 0.01U	3	
C562		ECEA1CU100	E.CAPACITOR 16V 10U	1	
C563		ECUM1E104ZFN	C.CAPACITOR CH 25V 0.1U	1	
C564		ECUM1H103KBN	C.CAPACITOR CH 50V 0.01U	1	
C565		ECEA1CU100	E.CAPACITOR 16V 10U	1	
C566		ECUM1E104ZFN	C.CAPACITOR CH 25V 0.1U	1	
C567		ECUM1H103KBN	C.CAPACITOR CH 50V 0.01U	1	
C568		ECEA1CU100	E.CAPACITOR 16V 10U	1	
C569		ECUM1E104ZFN	C.CAPACITOR CH 25V 0.1U	1	
C570		ECUM1H103KBN	C.CAPACITOR CH 50V 0.01U	1	
C571		ECEA1CU100	E.CAPACITOR 16V 10U	1	
C572		ECUM1E104ZFN	C.CAPACITOR CH 25V 0.1U	1	
C573		ECUM1H103KBN	C.CAPACITOR CH 50V 0.01U	1	
C574		ECEA1CU100	E.CAPACITOR 16V 10U	1	
C601-04		ECUM1H222KBN	C.CAPACITOR CH 50V 2200P	4	
C605		ECEA1AKG330	E.CAPACITOR 10V 33U	1	
C606,07		ECUM1H222KBN	C.CAPACITOR CH 50V 2200P	2	
C608		ECEA1AKG330	E.CAPACITOR 10V 33U	1	
C609-14		ECUM1H222KBN	C.CAPACITOR CH 50V 2200P	6	
C615		ECEA1AKG330	E.CAPACITOR 10V 33U	1	
C616		ECUM1H222KBN	C.CAPACITOR CH 50V 2200P	1	
C617		ECEA1AKG330	E.CAPACITOR 10V 33U	1	
C618-21		ECUM1H222KBN	C.CAPACITOR CH 50V 2200P	4	
C622		ECEA1AKG330	E.CAPACITOR 10V 33U	1	
C623,24		ECUM1H222KBN	C.CAPACITOR CH 50V 2200P	2	
C626-31		ECUM1H222KBN	C.CAPACITOR CH 50V 2200P	6	
C633		ECUM1H222KBN	C.CAPACITOR CH 50V 2200P	1	
C634		ECEA1AKG330	E.CAPACITOR 10V 33U	1	
C635-38		ECUM1E104ZFN	C.CAPACITOR CH 25V 0.1U	4	
C639		ECUM1H103KBN	C.CAPACITOR CH 50V 0.01U	1	
C640		ECEA0JU101	E.CAPACITOR 6.3V 100U	1	
C641,42		ECUM1E104ZFN	C.CAPACITOR CH 25V 0.1U	2	
C643		ECEA0JU330	E.CAPACITOR 6.3V 33U	1	
C645		ECUM1H103KBN	C.CAPACITOR CH 50V 0.01U	1	
C646		ECEA0JU330	E.CAPACITOR 6.3V 33U	1	
C647		ECUM1E104ZFN	C.CAPACITOR CH 25V 0.1U	1	
C648		ECEA1HU2R2	E.CAPACITOR 50V 2.2U	1	
C649		ECUM1H103KBN	C.CAPACITOR CH 50V 0.01U	1	
C650		ECEA1CKG470	E.CAPACITOR 16V 47U	1	
C651-53		ECUM1H103KBN	C.CAPACITOR CH 50V 0.01U	3	
C655		ECUM1E104ZFN	C.CAPACITOR CH 25V 0.1U	1	
C657		ECEA1CU101	E.CAPACITOR 16V 100U	1	
C658		ECUM1H050DCN	C.CAPACITOR CH 50V 50P	1	
C659		ECUM1H103KBN	C.CAPACITOR CH 50V 0.01U	1	
C660		ECEA1CU470	E.CAPACITOR 16V 47U	1	
C661		ECUM1H103KBN	C.CAPACITOR CH 50V 0.01U	1	
C662		ECEA1CU470	E.CAPACITOR 16V 47U	1	
C663		ECUM1H180JCN	C.CAPACITOR CH 50V 18P	1	
C664		ECUM1H151JCN	C.CAPACITOR CH 50V 150P	1	
C665		ECUM1H680JCN	C.CAPACITOR CH 50V 68P	1	
C666,67		ECEA1CU470	E.CAPACITOR 16V 47U	2	
C668		ECEA1CU101	E.CAPACITOR 16V 100U	1	
C679		ECUM1H270JCN	C.CAPACITOR CH 50V 27P	1	
C680-83		ECUM1H222KBN	C.CAPACITOR CH 50V 2200P	4	
C701		ECUM1H470JCN	C.CAPACITOR CH 50V 47P	1	

Refer to the P.C.BOARDS LIST, page 6-1-1, before using this page.

Ref.No.		Part No.	Part Name & Description	Pcs	Remarks
C702		ECUM1H103KBN	C.CAPACITOR CH 50V 0.01U	1	
C703		ECEA1CU470	E.CAPACITOR 16V 47U	1	
C704		ECUM1H331JCN	C.CAPACITOR CH 50V 330P	1	
C708		ECUM1H103KBN	C.CAPACITOR CH 50V 0.01U	1	
C709		ECEA1CU470	E.CAPACITOR 16V 47U	1	
C710		ECUM1H103KBN	C.CAPACITOR CH 50V 0.01U	1	
C711		ECUM1H102JCN	C.CAPACITOR CH 50V 1000P	1	
C712		ECUM1H820JCN	C.CAPACITOR CH 50V 82P	1	
C713,14		ECUM1H103KBN	C.CAPACITOR CH 50V 0.01U	2	
C715		ECEA1CU470	E.CAPACITOR 16V 47U	1	
C716		ECUM1H103KBN	C.CAPACITOR CH 50V 0.01U	1	
C717		ECUM1H331JCN	C.CAPACITOR CH 50V 330P	1	
C718-20		ECUM1H103KBN	C.CAPACITOR CH 50V 0.01U	3	
C721		ECQM1H122JF	P.CAPACITOR 50V 1200P	1	
C722-24		ECUM1H103KBN	C.CAPACITOR CH 50V 0.01U	3	
C725		ECEA1HN2R2S	E.CAPACITOR 50V 2.2U	1	
C726		ECEA1HNR47S	E.CAPACITOR 50V 0.47U	1	
C727		ECEA1HN010S	E.CAPACITOR 50V 1U	1	
C728		ECEA1HN2R2S	E.CAPACITOR 50V 2.2U	1	
C729		ECUM1H680JCN	C.CAPACITOR CH 50V 68P	1	
C730		ECUM1H103KBN	C.CAPACITOR CH 50V 0.01U	1	
C731		ECUM1H070DCN	C.CAPACITOR CH 50V 7P	1	
C732,33		ECUM1H103KBN	C.CAPACITOR CH 50V 0.01U	2	
C734		ECUM1H680JCN	C.CAPACITOR CH 50V 68P	1	
C735		ECUM1H221JCN	C.CAPACITOR CH 50V 220P	1	
C736		ECUM1H101JCN	C.CAPACITOR CH 50V 100P	1	
C737,38		ECEA1CU100	E.CAPACITOR 16V 10U	2	
C739		ECUM1H030DCN	C.CAPACITOR CH 50V 3P	1	
C740		ECUM1H103KBN	C.CAPACITOR CH 50V 0.01U	1	
C743,44		ECUM1H103KBN	C.CAPACITOR CH 50V 0.01U	2	
C745,46		ECUM1H102JCN	C.CAPACITOR CH 50V 1000P	2	
C749		ECUM1H103KBN	C.CAPACITOR CH 50V 0.01U	1	
C750		ECUM1H390JCN	C.CAPACITOR CH 50V 39P	1	
C751		ECEA0JU220	E.CAPACITOR 6.3V 22U	1	
C752		ECUM1H103KBN	C.CAPACITOR CH 50V 0.01U	1	
C753		ECUM1H221JCN	C.CAPACITOR CH 50V 220P	1	
C761		ECUM1H220JCN	C.CAPACITOR CH 50V 22P	1	
C762		ECUM1H050DCN	C.CAPACITOR CH 50V 50P	1	
C763,64		ECUM1H560JCN	C.CAPACITOR CH 50V 56P	2	
D1		MA151WK	DIODE	1	
D2		MA151K	DIODE	1	
D3,D4		MA151WK	DIODE	2	
D5		MA151K	DIODE	1	
D7		MA151WK	DIODE	1	
D8		MA151WA	DIODE	1	
D9		MA151K	DIODE	1	
D201,02		MA335R	DIODE	2	
D203,04		MA704	DIODE	2	
D205		MA151K	DIODE	1	
D206		MA151WA	DIODE	1	
D207		MA151K	DIODE	1	
D501		MA151K	DIODE	1	
D502		MA151WK	DIODE	1	
D601,02		MA704	DIODE	2	
D603		1SZ50	DIODE	1	
D701		MA151K	DIODE	1	
D702		MA704	DIODE	1	
D703		MA151K	DIODE	1	
D704,05		MA153	DIODE	2	
D706,07		MA335R	DIODE	2	
D708		MA151WA	DIODE	1	
D709		MA151WK	DIODE	1	
D710,11		MA151WA	DIODE	2	
D712		MA151K	DIODE	1	
DL1,L2		VLD0152	DELAY LINE	2	
DL3		VLD0149	DELAY LINE	1	
DL4		VLD0082	DELAY LINE	1	
DL201		VLD0082	DELAY LINE	1	

Ref.No.		Part No.	Part Name & Description	Pcs	Remarks
FL1-L4		VLF0576	FILTER	4	
FL201,02		VLF0576	FILTER	2	
FL401		VLF0576	FILTER	1	
FL501,02		VLF0380	FILTER	2	
FL601-04		VLF0576	FILTER	4	
FL605		VLF0754	FILTER	1	
IC1		NJM4558M	IC	1	
IC2		VCR0133	IC	1	
IC3		UPD4053BG	IC	1	
IC4		AN91A12S	IC	1	
IC5		CX22013	IC	1	
IC6		NJM1496M	IC	1	
IC7,C8		NJM592M8	IC	2	
IC9		TL082CPS	IC	1	
IC10		NJM2233BMA	IC	1	
IC11		AN78M09	IC	1	
IC12		AN78L07	IC	1	
IC13		AN78N05	IC	1	
IC14		AN79N09	IC	1	
IC15		AN79M05F	IC	1	
IC18		SN74LS221NS	IC	1	
IC201		UPD4053BG	IC	1	
IC205		AN612	IC	1	
IC206		MC74HC4053F	IC	1	
IC207		TL082CPS	IC	1	
IC209		UPD4053BG	IC	1	
IC210		NE5539D	IC	1	
IC211,12		UPD4053BG	IC	2	
IC214		AN6041	IC	1	
IC215,16		UPD4053BG	IC	2	
IC217		TL082CPS	IC	1	
IC218		UPD4053BG	IC	1	
IC220		TL082CPS	IC	1	
IC224		LM311M	IC	1	
IC401		TC74HC221AF	IC	1	
IC402		SN74LS221NS	IC	1	
IC403		UPD65013BC16	IC	1	
IC404		MC74HC04AF	IC	1	
IC501		TL082CPS	IC	1	
IC503		MC74HC4053F	IC	1	
IC505		AN91A12S	IC	1	
IC506		AN78N09	IC	1	
IC507		AN78N05	IC	1	
IC508		AN79N09	IC	1	
IC509		AN79N05	IC	1	
IC510		UPD4053BG	IC	1	
IC601,02		HA19211BNT	IC	2	
IC603,04		UPD41101C-1	IC	2	
IC605		MC74HC574F	IC	1	(R)
IC606		HA19510	IC	1	
IC607		RC3415M	IC	1	
IC609		AN78L05	IC	1	
IC610		NJM2233BMA	IC	1	
IC703		SN74LS221NS	IC	1	
IC704		MC74HC157AF	IC	1	
IC705		MC74HC74AF	IC	1	
IC706		TL082CPS	IC	1	
IC707		MC74HC4053F	IC	1	
IC708		TL084CNS	IC	1	
IC709		MC74HC00AF	IC	1	
IC710		SN74LS221NS	IC	1	
IC711		MC74HC04AF	IC	1	
IC712		MC74HC14AF	IC	1	
IC713		UPD65013FC25	IC	1	
IC714		MC74HC163F	IC	1	
L1-L6		VLQEL05F101K	COIL 100UH	6	
L10,11		VLQEL05F101K	COIL 100UH	2	

Refer to the P.C.BOARDS LIST, page 6-1-1, before using this page.

Ref.No.		Part No.	Part Name & Description	Pcs	Remarks
L13		VLQEL05S1R0J	COIL 1UH	1	
L15		VLQEL05F101K	COIL 100UH	1	
L18		VLQEL05F101K	COIL 100UH	1	
L19		VLQEL05S221J	COIL 220UH	1	
L20		VLQEL05S101J	COIL 100UH	1	
L21		VLQEL05S220J	COIL 22UH	1	
L23		VLQEL05S1R5J	COIL 1.5UH	1	
L24		VLQEL05S220J	COIL 22UH	1	
L25-28		VLQEL05S470J	COIL 47UH	4	
L29		VLQEL05S4R7J	COIL 4.7UH	1	
L201,02		VLQEL05F101K	COIL 100UH	2	
L204-06		VLQEL05F101K	COIL 100UH	3	
L208,09		VLQEL05F101K	COIL 100UH	2	
L212		VLQEL05F101K	COIL 100UH	1	
L214		VLQEL05S180J	COIL 18UH	1	
L215		VLQEL05S4R7J	COIL 4.7UH	1	
L216		VLQEL05S181J	COIL 180UH	1	
L220,21		VLQEL05S680J	COIL 68UH	2	
L401		VLQEL05S470J	COIL 47UH	1	
L501,02		VLQEL05F101K	COIL 100UH	2	
L505		VLQEL05F101K	COIL 100UH	1	
L506		VLQEL05S680J	COIL 68UH	1	
L507		VLQEL05F101K	COIL 100UH	1	
L508		VLQEL05S680J	COIL 68UH	1	
L509,10		VLQEL05F101K	COIL 100UH	2	
L513		VLQEL05S471J	COIL 470UH	1	
L601-03		VLP0017	COIL	3	
L604		VLQEL05F221K	COIL 200UH	1	
L606,07		VLQEL05F101K	COIL 100UH	2	
L608		VLQEL05S560J	COIL 56UH	1	
L701		VLQEL05F101K	COIL 100UH	1	
L703,04		VLQEL05F101K	COIL 100UH	2	
L705		VLQEL05S3R3J	COIL 3.3UH	1	
L706		VLQEL05S1R5J	COIL 1.5UH	1	
L707		VLQEL05S560J	COIL 56UH	1	
Q1		2SC2295	TRANSISTOR CHIP	1	(B,C)
Q2		2SD601	TRANSISTOR CHIP	1	(Q,R)
Q3		2SB709	TRANSISTOR CHIP	1	(Q,R)
Q4		UN2112	TRANSISTOR-RESISTOR	1	
Q5		2SK374	TRANSISTOR	1	
Q6		2SD601	TRANSISTOR CHIP	1	(Q,R)
Q7		2SB709	TRANSISTOR CHIP	1	(Q,R)
Q8		2SD601	TRANSISTOR CHIP	1	(Q,R)
Q9		2SC2295	TRANSISTOR CHIP	1	(B,C)
Q10		2SD601	TRANSISTOR CHIP	1	(Q,R)
Q11		2SB709	TRANSISTOR CHIP	1	(Q,R)
Q12-15		2SC2295	TRANSISTOR CHIP	4	(B,C)
Q17		2SD601	TRANSISTOR CHIP	1	(Q,R)
Q18		2SB709	TRANSISTOR CHIP	1	(Q,R)
Q19,20		2SC2295	TRANSISTOR CHIP	2	(B,C)
Q21		2SA1022	TRANSISTOR CHIP	1	(B,C)
Q22		2SC2295	TRANSISTOR CHIP	1	(B,C)
Q23		2SA1022	TRANSISTOR CHIP	1	(B,C)
Q24		2SK198	TRANSISTOR CHIP	1	(Q)
Q25-27		2SC2295	TRANSISTOR CHIP	3	(B,C)
Q28,29		2SB709	TRANSISTOR CHIP	2	(Q,R)
Q30		2SC2295	TRANSISTOR CHIP	1	(B,C)
Q31		2SD601	TRANSISTOR CHIP	1	(Q,R)
Q32		2SC2295	TRANSISTOR CHIP	1	(B,C)
Q33		2SD601	TRANSISTOR CHIP	1	(Q,R)
Q34-36		2SC2295	TRANSISTOR CHIP	3	(B,C)
Q37		2SA1022	TRANSISTOR CHIP	1	(B,C)
Q38		2SC2295	TRANSISTOR CHIP	1	(B,C)
Q39		2SA1022	TRANSISTOR CHIP	1	(B,C)
Q40		2SK198	TRANSISTOR CHIP	1	(Q)
Q41-43		2SC2295	TRANSISTOR CHIP	3	(B,C)
Q44		2SB709	TRANSISTOR CHIP	1	(Q,R)
Q45		2SD601	TRANSISTOR CHIP	1	(Q,R)
Q46		2SC2295	TRANSISTOR CHIP	1	(B,C)
Q47		2SD601	TRANSISTOR CHIP	1	(Q,R)
Q48-50		2SC2404	TRANSISTOR CHIP	3	(C,D)
Q51-53		2SK374	TRANSISTOR	3	

Ref.No.		Part No.	Part Name & Description	Pcs	Remarks
Q54		2SC2404	TRANSISTOR CHIP	1	(C,D)
Q55		2SA1226	TRANSISTOR	1	
Q56		2SC2404	TRANSISTOR CHIP	1	(C,D)
Q57		2SA1226	TRANSISTOR	1	
Q58		2SC2295	TRANSISTOR CHIP	1	(B,C)
Q59		2SB709	TRANSISTOR CHIP	1	(Q,R)
Q60		2SD601	TRANSISTOR CHIP	1	(Q,R)
Q61		UN2112	TRANSISTOR-RESISTOR	1	
Q62		2SD601	TRANSISTOR CHIP	1	(Q,R)
Q64		UN2212	TRANSISTOR-RESISTOR	1	
Q201,02		2SC2295	TRANSISTOR CHIP	2	(B,C)
Q203,04		2SA1022	TRANSISTOR CHIP	2	(B,C)
Q205		2SD601	TRANSISTOR CHIP	1	(Q,R)
Q206		2SC2295	TRANSISTOR CHIP	1	(B,C)
Q207		2SD601	TRANSISTOR CHIP	1	(Q,R)
Q209		2SC2295	TRANSISTOR CHIP	1	(B,C)
Q210		2SA1022	TRANSISTOR CHIP	1	(B,C)
Q212		2SC2295	TRANSISTOR CHIP	1	(B,C)
Q213		2SD601	TRANSISTOR CHIP	1	(Q,R)
Q214,15		2SB709	TRANSISTOR CHIP	2	(Q,R)
Q216		2SD601	TRANSISTOR CHIP	1	(Q,R)
Q217		2SC2295	TRANSISTOR CHIP	1	(B,C)
Q218,19		2SB709	TRANSISTOR CHIP	2	(Q,R)
Q230		2SB709	TRANSISTOR CHIP	1	(Q,R)
Q231,32		2SD601	TRANSISTOR CHIP	2	(Q,R)
Q233		2SC2404	TRANSISTOR CHIP	1	(C,D)
Q234		2SB709	TRANSISTOR CHIP	1	(Q,R)
Q235,36		2SD601	TRANSISTOR CHIP	2	(Q,R)
Q237		2SC2404	TRANSISTOR CHIP	1	(C,D)
Q238,39		2SB709	TRANSISTOR CHIP	2	(Q,R)
Q240		UN2212	TRANSISTOR-RESISTOR	1	
Q241,42		2SB709	TRANSISTOR CHIP	2	(Q,R)
Q401,02		UN2212	TRANSISTOR-RESISTOR	2	
Q501,02		2SD601	TRANSISTOR CHIP	2	(Q,R)
Q503,04		2SC2295	TRANSISTOR CHIP	2	(B,C)
Q506		2SC2295	TRANSISTOR CHIP	1	(B,C)
Q507		2SK374	TRANSISTOR	1	
Q509,10		2SD601	TRANSISTOR CHIP	2	(Q,R)
Q511,12		2SC2295	TRANSISTOR CHIP	2	(B,C)
Q514		2SC2295	TRANSISTOR CHIP	1	(B,C)
Q515		2SK374	TRANSISTOR	1	
Q517		2SB709	TRANSISTOR CHIP	1	(Q,R)
Q518,19		2SD601	TRANSISTOR CHIP	2	(Q,R)
Q520		2SB709	TRANSISTOR CHIP	1	(Q,R)
Q521		2SD601	TRANSISTOR CHIP	1	(Q,R)
Q522		2SB709	TRANSISTOR CHIP	1	(Q,R)
Q523		2SD601	TRANSISTOR CHIP	1	(Q,R)
Q525		2SA1022	TRANSISTOR CHIP	1	(B,C)
Q601		2SD601	TRANSISTOR CHIP	1	(Q,R)
Q602		2SA1022	TRANSISTOR CHIP	1	(B,C)
Q603		2SB709	TRANSISTOR CHIP	1	(Q,R)
Q604-06		2SC2295	TRANSISTOR CHIP	3	(B,C)
Q609		2SB709	TRANSISTOR CHIP	1	(Q,R)
Q701		2SD601	TRANSISTOR CHIP	1	(Q,R)
Q702		2SC2404	TRANSISTOR CHIP	1	(C,D)
Q703		2SD601	TRANSISTOR CHIP	1	(Q,R)
Q704		UN2112	TRANSISTOR-RESISTOR	1	
Q705		2SC3757	TRANSISTOR	1	(Q,R)
Q706		2SD601	TRANSISTOR CHIP	1	(Q,R)
Q707		2SC3757	TRANSISTOR	1	(Q,R)
Q708,09		2SA1226	TRANSISTOR	2	
Q710		2SC3757	TRANSISTOR	1	(Q,R)
Q711		2SB709	TRANSISTOR CHIP	1	(Q,R)
Q712		UN2212	TRANSISTOR-RESISTOR	1	
			RESISTORS		
R1		ERJ6GEYJ471	M.RESISTOR CH 1/10W 470	1	
R2,R3		ERJ6GEYG122	M.RESISTOR CH 1/10W 1.2K	2	
R4		ERJ6GEYJ332	M.RESISTOR CH 1/10W 3.3K	1	
R5,R6		ERJ6GEYJ152	M.RESISTOR CH 1/10W 1.5K	2	
R7		ERJ6GEYJ122	M.RESISTOR CH1/10W 1.2K	1	
R8		ERJ6GEYJ332	M.RESISTOR CH 1/10W 3.3K	1	
R9		ERJ6GEYJ103	M.RESISTOR CH 1/10W 10K	1	

Refer to the P.C.BOARDS LIST, page 6-1-1, before using this page.

Ref.No.		Part No.	Part Name & Description	Pcs	Remarks
R10		ERJ6GEYJ103	M.RESISTOR CH 1/10W 10K	1	
R11		ERJ6GEYJ472	M.RESISTOR CH 1/10W 4.7K	1	
R12		ERJ6GEYJ224	M.RESISTOR CH 1/10W 220K	1	
R13		ERJ6GEYJ684	M.RESISTOR CH 1/10W 680K	1	
R14		ERJ6GEYJ103	M.RESISTOR CH 1/10W 10K	1	
R15		ERJ6GEYJ222	M.RESISTOR CH 1/10W 2.2K	1	
R16		ERJ6GEYJ102	M.RESISTOR CH 1/10W 1K	1	
R17		ERJ6GEYJ222	M.RESISTOR CH 1/10W 2.2K	1	
R18,19		ERJ6GEYJ333	M.RESISTOR CH 1/10W 33K	2	
R20		ERJ6GEYJ102	M.RESISTOR CH 1/10W 1K	1	
R21		ERSA10J152	M.RESISTOR 1.5K	1	
R22		ERJ6GEYJ332	M.RESISTOR CH 1/10W 3.3K	1	
R23		ERJ6GEYJ101	M.RESISTOR CH 1/10W 100	1	
R24		ERJ6GEYJ682	M.RESISTOR CH 1/10W 6.8K	1	
R25		ERJ6GEYJ101	M.RESISTOR CH 1/10W 100	1	
R26		ERJ6GEYJ472	M.RESISTOR CH 1/10W 4.7K	1	
R27		ERJ6GEYJ103	M.RESISTOR CH 1/10W 10K	1	
R28		ERJ6GEYJ182	M.RESISTOR CH 1/10W 1.8K	1	
R29		ERJ6GEYJ152	M.RESISTOR CH 1/10W 1.5K	1	
R30		ERJ6GEYJ821	M.RESISTOR CH 1/10W 820	1	
R31		ERJ6GEYJ222	M.RESISTOR CH 1/10W 2.2K	1	
R32-34		ERJ6GEYJ101	M.RESISTOR CH 1/10W 100	3	
R35		ERJ6GEYJ472	M.RESISTOR CH 1/10W 4.7K	1	
R36		VREO034E201	M.RESISTOR CH 1/10W 200	1	
R37		ERJ6GEYJ471	M.RESISTOR CH 1/10W 470	1	
R38		ERJ6GEYJ102	M.RESISTOR CH 1/10W 1K	1	
R39		ERJ6GEYG181	M.RESISTOR CH 1/10W 180	1	
R40		ERJ6GEYJ221	M.RESISTOR CH 1/10W 220	1	
R41		ERJ6GEYJ101	M.RESISTOR CH 1/10W 100	1	
R42,43		ERJ6GEYJ331	M.RESISTOR CH 1/10W 330	2	
R44,45		ERJ6GEYJ681	M.RESISTOR CH 1/10W 680	2	
R46		ERJ6GEYJ102	M.RESISTOR CH 1/10W 1K	1	
R47		ERJ6GEYJ470	M.RESISTOR CH 1/10W 47	1	
R48		ERJ6GEYJ332	M.RESISTOR CH 1/10W 3.3K	1	
R49		ERJ6GEYJ102	M.RESISTOR CH 1/10W 1K	1	
R50		ERJ6GEYJ332	M.RESISTOR CH 1/10W 3.3K	1	
R51		ERJ6GEYJ562	M.RESISTOR CH 1/10W 5.6K	1	
R52		ERJ6GEYJ182	M.RESISTOR CH 1/10W 1.8K	1	
R53		ERJ6GEYJ750	M.RESISTOR CH 1/10W 75	1	
R55		ERJ6GEYJ222	M.RESISTOR CH 1/10W 2.2K	1	
R56		ERJ6GEYJ221	M.RESISTOR CH 1/10W 220	1	
R57		ERJ6GEYJ822	M.RESISTOR CH 1/10W 8.2K	1	
R58		ERJ6GEYJ223	M.RESISTOR CH 1/10W 22K	1	
R59		ERJ6GEYJ272	M.RESISTOR CH 1/10W 2.7K	1	
R60		ERJ6GEYJ330	M.RESISTOR CH1/10W 33	1	
R61,62		ERJ6GEYJ220	M.RESISTOR CH1/10W 22	2	
R63-66		ERJ6GEYJ560	M.RESISTOR CH 1/10W 56	4	
R67		ERJ6GEYJ221	M.RESISTOR CH 1/10W 220	1	
R68		ERJ6GEYJ272	M.RESISTOR CH 1/10W 2.7K	1	
R69		ERJ6GEYJ124	M.RESISTOR CH 1/10W 120K	1	
R70		ERJ6GEYJ334	M.RESISTOR CH 1/10W 330K	1	
R71		ERJ6GEYJ102	M.RESISTOR CH 1/10W 1K	1	
R72		ERJ6GEYJ472	M.RESISTOR CH 1/10W 4.7K	1	
R73		ERJ6GEYJ151	M.RESISTOR CH 1/10W 150	1	
R74		ERJ6GEYJ472	M.RESISTOR CH 1/10W 4.7K	1	
R75		ERJ6GEYJ222	M.RESISTOR CH 1/10W 2.2K	1	
R76		ERJ6GEYJ102	M.RESISTOR CH 1/10W 1K	1	
R77		ERJ6GEYJ103	M.RESISTOR CH 1/10W 10K	1	
R78		ERJ6GEYJ152	M.RESISTOR CH 1/10W 1.5K	1	
R79		ERJ6GEYJ332	M.RESISTOR CH 1/10W 3.3K	1	
R80		ERJ6GEYJ152	M.RESISTOR CH 1/10W 1.5K	1	
R81		ERJ6GEYJ472	M.RESISTOR CH 1/10W 4.7K	1	
R82		ERJ6GEYJ152	M.RESISTOR CH 1/10W 1.5K	1	
R83		ERJ6GEYJ101	M.RESISTOR CH 1/10W 100	1	
R84,85		ERJ6GEYJ681	M.RESISTOR CH 1/10W 680	2	
R86		ERJ6GEYJ152	M.RESISTOR CH 1/10W 1.5K	1	
R87		ERJ6GEYJ103	M.RESISTOR CH 1/10W 10K	1	
R88		ERJ6GEYJ182	M.RESISTOR CH 1/10W 1.8K	1	
R89		ERJ6GEYJ152	M.RESISTOR CH 1/10W 1.5K	1	
R90		ERJ6GEYJ561	M.RESISTOR CH 1/10W 560	1	
R91		ERJ6GEYJ222	M.RESISTOR CH 1/10W 2.2K	1	
R92		ERJ6GEYJ123	M.RESISTOR CH1/10W 12K	1	
R93		ERJ6GEYJ682	M.RESISTOR CH 1/10W 6.8K	1	
R94		ERJ6GEYJ122	M.RESISTOR CH1/10W 1.2K	1	
R95		ERJ6GEYJ152	M.RESISTOR CH 1/10W 1.5K	1	

Ref.No.		Part No.	Part Name & Description	Pcs	Remarks
R96		ERJ6GEYJ273	M.RESISTOR CH1/10W 27K	1	
R97		ERJ6GEYJ333	M.RESISTOR CH 1/10W 33K	1	
R98		ERJ6GEYJ822	M.RESISTOR CH 1/10W 8.2K	1	
R99		ERJ6GEYJ223	M.RESISTOR CH 1/10W 22K	1	
R100		ERJ6GEYJ272	M.RESISTOR CH 1/10W 2.7K	1	
R101		ERJ6GEYJ330	M.RESISTOR CH1/10W 33	1	
R102,03		ERJ6GEYJ220	M.RESISTOR CH1/10W 22	2	
R104-07		ERJ6GEYJ560	M.RESISTOR CH 1/10W 56	4	
R108		ERJ6GEYJ221	M.RESISTOR CH 1/10W 220	1	
R109		ERJ6GEYJ104	M.RESISTOR CH 1/10W 100K	1	
R110		ERJ6GEYJ334	M.RESISTOR CH 1/10W 330K	1	
R111		ERJ6GEYJ102	M.RESISTOR CH 1/10W 1K	1	
R112		ERJ6GEYJ472	M.RESISTOR CH 1/10W 4.7K	1	
R113		ERJ6GEYJ181	M.RESISTOR CH1/10W 180	1	
R114		ERJ6GEYJ472	M.RESISTOR CH 1/10W 4.7K	1	
R115		ERJ6GEYJ102	M.RESISTOR CH 1/10W 1K	1	
R116		ERJ6GEYJ103	M.RESISTOR CH 1/10W 10K	1	
R117		ERJ6GEYJ152	M.RESISTOR CH 1/10W 1.5K	1	
R118		ERJ6GEYJ331	M.RESISTOR CH 1/10W 330	1	
R119		ERJ6GEYJ152	M.RESISTOR CH 1/10W 1.5K	1	
R120		ERJ6GEYJ472	M.RESISTOR CH 1/10W 4.7K	1	
R121		ERJ6GEYJ152	M.RESISTOR CH 1/10W 1.5K	1	
R122		ERJ6GEYJ103	M.RESISTOR CH 1/10W 10K	1	
R123		ERJ6GEYJ182	M.RESISTOR CH 1/10W 1.8K	1	
R124		ERJ6GEYJ152	M.RESISTOR CH 1/10W 1.5K	1	
R125		ERJ6GEYJ561	M.RESISTOR CH 1/10W 560	1	
R126		ERJ6GEYJ222	M.RESISTOR CH 1/10W 2.2K	1	
R127,28		ERJ6GEYJ221	M.RESISTOR CH 1/10W 220	2	
R129-34		ERJ6GEYJ103	M.RESISTOR CH 1/10W 10K	6	
R137		ERJ6GEYJ103	M.RESISTOR CH 1/10W 10K	1	
R138		ERJ6GEYJ472	M.RESISTOR CH 1/10W 4.7K	1	
R139,40		ERJ6GEYJ103	M.RESISTOR CH 1/10W 10K	2	
R141,42		ERJ6GEYJ222	M.RESISTOR CH 1/10W 2.2K	2	
R143		ERJ6GEYJ472	M.RESISTOR CH 1/10W 4.7K	1	
R144,45		ERJ6GEYJ103	M.RESISTOR CH 1/10W 10K	2	
R146,47		ERJ6GEYJ222	M.RESISTOR CH 1/10W 2.2K	2	
R148		ERJ6GEYJ472	M.RESISTOR CH 1/10W 4.7K	1	
R149		ERJ6GEYJ392	M.RESISTOR CH 1/10W 3.9K	1	
R150		ERJ6GEYJ683	M.RESISTOR CH 1/10W 68K	1	
R151		ERJ6GEYG392	M.RESISTOR CH 1/10W 3.9K	1	
R152		ERJ6GEYJ222	M.RESISTOR CH 1/10W 2.2K	1	
R153		ERJ6GEYJ561	M.RESISTOR CH 1/10W 560	1	
R154		ERJ6GEYJ223	M.RESISTOR CH 1/10W 22K	1	
R155		ERJ6GEYJ332	M.RESISTOR CH 1/10W 3.3K	1	
R156		ERJ6GEYJ223	M.RESISTOR CH 1/10W 22K	1	
R157		ERJ6GEYJ222	M.RESISTOR CH 1/10W 2.2K	1	
R158,59		ERJ6GEYJ223	M.RESISTOR CH 1/10W 22K	2	
R161		ERJ6GEYJ331	M.RESISTOR CH 1/10W 330	1	
R162		ERJ6GEYJ221	M.RESISTOR CH 1/10W 220	1	
R163		ERJ6GEYJ471	M.RESISTOR CH 1/10W 470	1	
R164		ERJ6GEYJ221	M.RESISTOR CH 1/10W 220	1	
R165-71		ERJ6GEYJ101	M.RESISTOR CH 1/10W 100	7	
R175		ERJ6GEYJ222	M.RESISTOR CH 1/10W 2.2K	1	
R176		ERJ6GEYJ101	M.RESISTOR CH 1/10W 100	1	
R177		ERJ6GEYJ103	M.RESISTOR CH 1/10W 10K	1	
R182		ERJ6GEYJ473	M.RESISTOR CH 1/10W 47K	1	
R183		ERJ6GEYJ562	M.RESISTOR CH 1/10W 5.6K	1	
R188		ERJ6GEYJ222	M.RESISTOR CH 1/10W 2.2K	1	
R193		ERJ6GEYJ103	M.RESISTOR CH 1/10W 10K	1	
R201		ERJ6GEYJ101	M.RESISTOR CH 1/10W 100	1	
R202		ERJ6GEYJ470	M.RESISTOR CH 1/10W 47	1	
R203		ERJ6GEYJ272	M.RESISTOR CH 1/10W 2.7K	1	
R204,05		ERJ6GEYJ103	M.RESISTOR CH 1/10W 10K	2	
R206		ERDS2TJ681	C.RESISTOR 1/4W 680	1	
R207		ERJ6GEYG102	M.RESISTOR CH 1/10W 1K	1	
R208		ERJ6GEYJ472	M.RESISTOR CH 1/10W 4.7K	1	
R209		ERJ6GEYJ103	M.RESISTOR CH 1/10W 10K	1	
R210,11		ERJ6GEYJ472	M.RESISTOR CH 1/10W 4.7K	2	
R212		ERJ6GEYJ182	M.RESISTOR CH 1/10W 1.8K	1	
R213		ERDS2TJ471	C.RESISTOR 1/4W 470	1	
R214,15		ERJ6GEYJ472	M.RESISTOR CH 1/10W 4.7K	2	
R216		ERJ6GEYJ561	M.RESISTOR CH 1/10W 560	1	
R217		ERJ6GEYJ222	M.RESISTOR CH 1/10W 2.2K	1	
R219		ERJ6GEYJ101	M.RESISTOR CH 1/10W 100	1	
R220		ERJ6GEYJ221	M.RESISTOR CH 1/10W 220	1	

Refer to the P.C.BOARDS LIST, page 6-1-1, before using this page.

Ref.No.		Part No.	Part Name & Description	Pcs	Remarks
R221		ERJ6GEYJ332	M.RESISTOR CH 1/10W 3.3K	1	
R226		ERJ6GEYJ472	M.RESISTOR CH 1/10W 4.7K	1	
R227-29		ERJ6GEYJ152	M.RESISTOR CH 1/10W 1.5K	3	
R230		ERJ6GEYJ221	M.RESISTOR CH 1/10W 220	1	
R231		ERJ6GEYJ102	M.RESISTOR CH 1/10W 1K	1	
R232		ERJ6GEYJ332	M.RESISTOR CH 1/10W 3.3K	1	
R235,36		ERJ6GEYJ152	M.RESISTOR CH 1/10W 1.5K	2	
R237		ERJ6GEYJ681	M.RESISTOR CH 1/10W 680	1	
R238		ERJ6GEYJ332	M.RESISTOR CH 1/10W 3.3K	1	
R239		ERJ6GEYJ102	M.RESISTOR CH 1/10W 1K	1	
R240		ERJ6GEYJ152	M.RESISTOR CH 1/10W 1.5K	1	
R241,42		ERJ6GEYJ102	M.RESISTOR CH 1/10W 1K	2	
R246		ERJ6GEYJ184	M.RESISTOR CH1/10W 180K	1	
R247		ERJ6GEYJ103	M.RESISTOR CH 1/10W 10K	1	
R248		ERJ6GEYJ472	M.RESISTOR CH 1/10W 4.7K	1	
R249		ERJ6GEYJ122	M.RESISTOR CH1/10W 1.2K	1	
R250		ERJ6GEYJ331	M.RESISTOR CH 1/10W 330	1	
R251		ERJ6GEYJ472	M.RESISTOR CH 1/10W 4.7K	1	
R252		ERJ6GEYJ222	M.RESISTOR CH 1/10W 2.2K	1	
R253		ERJ6GEYJ102	M.RESISTOR CH 1/10W 1K	1	
R254		ERJ6GEYJ472	M.RESISTOR CH 1/10W 4.7K	1	
R255		ERJ6GEYJ222	M.RESISTOR CH 1/10W 2.2K	1	
R256		ERDS2TJ221	C.RESISTOR 1/4W 220	1	
R257		ERJ6GEYJ221	M.RESISTOR CH 1/10W 220	1	
R258		ERJ6GEYJ101	M.RESISTOR CH 1/10W 100	1	
R259		ERJ6GEYJ391	M.RESISTOR CH 1/10W 390	1	
R260		ERJ6GEYJ151	M.RESISTOR CH 1/10W 150	1	
R261		ERDS2TJ331	C.RESISTOR 1/4W 330	1	
R262		ERJ6GEYJ152	M.RESISTOR CH 1/10W 1.5K	1	
R264		ERJ6GEYJ470	M.RESISTOR CH 1/10W 47	1	
R265		ERJ6GEYJ103	M.RESISTOR CH 1/10W 10K	1	
R266		ERJ6GEYJ101	M.RESISTOR CH 1/10W 100	1	
R267		ERJ6GEYJ472	M.RESISTOR CH 1/10W 4.7K	1	
R295,96		ERJ6GEYJ222	M.RESISTOR CH 1/10W 2.2K	2	
R297		ERJ6GEYJ102	M.RESISTOR CH 1/10W 1K	1	
R298		ERJ6GEYJ470	M.RESISTOR CH 1/10W 47	1	
R299,00		ERJ6GEYJ152	M.RESISTOR CH 1/10W 1.5K	2	
R301		ERJ6GEYJ561	M.RESISTOR CH 1/10W 560	1	
R302		ERJ6GEYJ470	M.RESISTOR CH 1/10W 47	1	
R303		ERJ6GEYJ222	M.RESISTOR CH 1/10W 2.2K	1	
R304		ERJ6GEYJ332	M.RESISTOR CH 1/10W 3.3K	1	
R305		ERJ6GEYJ103	M.RESISTOR CH 1/10W 10K	1	
R306,07		ERJ6GEYJ223	M.RESISTOR CH 1/10W 22K	2	
R308		ERJ6GEYJ101	M.RESISTOR CH 1/10W 100	1	
R309		ERJ6GEYJ105	M.RESISTOR CH 1/10W 1M	1	
R310		ERJ6GEYJ472	M.RESISTOR CH 1/10W 4.7K	1	
R311		ERJ6GEYJ103	M.RESISTOR CH 1/10W 10K	1	
R312		ERJ6GEYJ101	M.RESISTOR CH 1/10W 100	1	
R313		ERJ6GEYJ472	M.RESISTOR CH 1/10W 4.7K	1	
R314		ERJ6GEYJ103	M.RESISTOR CH 1/10W 10K	1	
R315,16		ERJ6GEYJ561	M.RESISTOR CH 1/10W 560	2	
R317		ERJ6GEYJ102	M.RESISTOR CH 1/10W 1K	1	
R318		ERJ6GEYJ470	M.RESISTOR CH 1/10W 47	1	
R319		ERJ6GEYJ152	M.RESISTOR CH 1/10W 1.5K	1	
R320		ERJ6GEYJ561	M.RESISTOR CH 1/10W 560	1	
R321		ERJ6GEYJ152	M.RESISTOR CH 1/10W 1.5K	1	
R322		ERJ6GEYJ470	M.RESISTOR CH 1/10W 47	1	
R323		ERJ6GEYJ222	M.RESISTOR CH 1/10W 2.2K	1	
R324		ERJ6GEYJ332	M.RESISTOR CH 1/10W 3.3K	1	
R325		ERJ6GEYJ103	M.RESISTOR CH 1/10W 10K	1	
R326,27		ERJ6GEYJ223	M.RESISTOR CH 1/10W 22K	2	
R328		ERJ6GEYJ101	M.RESISTOR CH 1/10W 100	1	
R330		ERJ6GEYJ105	M.RESISTOR CH 1/10W 1M	1	
R331		ERJ6GEYJ472	M.RESISTOR CH 1/10W 4.7K	1	
R332		ERJ6GEYJ103	M.RESISTOR CH 1/10W 10K	1	
R333		ERJ6GEYJ101	M.RESISTOR CH 1/10W 100	1	
R334		ERJ6GEYJ472	M.RESISTOR CH 1/10W 4.7K	1	
R335		ERJ6GEYJ101	M.RESISTOR CH 1/10W 100	1	
R336		ERJ6GEYJ272	M.RESISTOR CH 1/10W 2.7K	1	
R337		ERJ6GEYJ183	M.RESISTOR CH 1/10W 18K	1	
R338		ERJ6GEYJ101	M.RESISTOR CH 1/10W 100	1	
R345		ERJ6GEY0R00	M.RESISTOR CH 1/10W 0	1	
R346		ERJ6GEYJ103	M.RESISTOR CH 1/10W 10K	1	
R347		ERJ6GEYJ334	M.RESISTOR CH 1/10W 330K	1	
R348		ERJ6GEYJ472	M.RESISTOR CH 1/10W 4.7K	1	

Ref.No.		Part No.	Part Name & Description	Pcs	Remarks
R349,50		ERJ6GEYJ103	M.RESISTOR CH 1/10W 10K	2	
R351		ERJ6GEYJ563	M.RESISTOR CH 1/10W 56K	1	
R353		ERJ6GEYJ561	M.RESISTOR CH 1/10W 560	1	
R354		ERJ6GEYJ102	M.RESISTOR CH 1/10W 1K	1	
R362		ERJ6GEYJ472	M.RESISTOR CH 1/10W 4.7K	1	
R363		ERJ6GEYJ101	M.RESISTOR CH 1/10W 100	1	
R364		ERJ6GEYJ472	M.RESISTOR CH 1/10W 4.7K	1	
R365		ERJ6GEYJ334	M.RESISTOR CH 1/10W 330K	1	
R366		ERJ6GEYJ102	M.RESISTOR CH 1/10W 1K	1	
R367		ERJ6GEYJ153	M.RESISTOR CH 1/10W 15K	1	
R374		ERJ6GEYJ562	M.RESISTOR CH 1/10W 5.6K	1	
R401		ERJ6GEYJ333	M.RESISTOR CH 1/10W 33K	1	
R402		ERJ6GEYJ153	M.RESISTOR CH 1/10W 15K	1	
R403		ERJ6GEYJ272	M.RESISTOR CH 1/10W 2.7K	1	
R404		ERJ6GEYJ393	M.RESISTOR CH 1/10W 39K	1	
R405,06		ERJ6GEYJ103	M.RESISTOR CH 1/10W 10K	2	
R407,08		ERJ6GEY0R00	M.RESISTOR CH 1/10W 0	2	
R412,13		ERJ6GEYJ222	M.RESISTOR CH 1/10W 2.2K	2	
R415		ERJ6GEY0R00	M.RESISTOR CH 1/10W 0	1	
R416		ERJ6GEYJ222	M.RESISTOR CH 1/10W 2.2K	1	
R501		ERJ6GEYJ152	M.RESISTOR CH 1/10W 1.5K	1	
R502		ERJ6GEYJ271	M.RESISTOR CH 1/10W 270	1	
R503		ERJ6GEYJ102	M.RESISTOR CH 1/10W 1K	1	
R504		ERJ6GEYJ271	M.RESISTOR CH 1/10W 270	1	
R505		ERJ6GEYJ102	M.RESISTOR CH 1/10W 1K	1	
R506		ERJ6GEYJ332	M.RESISTOR CH 1/10W 3.3K	1	
R507		ERJ6GEYJ681	M.RESISTOR CH 1/10W 680	1	
R508		ERJ6GEYJ271	M.RESISTOR CH 1/10W 270	1	
R509		ERJ6GEYJ821	M.RESISTOR CH 1/10W 820	1	
R510		ERJ6GEYJ102	M.RESISTOR CH 1/10W 1K	1	
R511		ERJ6GEYJ470	M.RESISTOR CH 1/10W 47	1	
R512		ERJ6GEYJ272	M.RESISTOR CH 1/10W 2.7K	1	
R513		ERJ6GEYJ472	M.RESISTOR CH 1/10W 4.7K	1	
R514		ERJ6GEYJ470	M.RESISTOR CH 1/10W 47	1	
R515		ERJ6GEYJ153	M.RESISTOR CH 1/10W 15K	1	
R516		ERJ6GEYJ681	M.RESISTOR CH 1/10W 680	1	
R517		ERJ6GEYJ332	M.RESISTOR CH 1/10W 3.3K	1	
R518		ERJ6GEYJ103	M.RESISTOR CH 1/10W 10K	1	
R519		ERJ6GEYJ154	M.RESISTOR CH1/10W 150K	1	
R520		ERJ6GEYJ332	M.RESISTOR CH 1/10W 3.3K	1	
R521		ERJ6GEYJ331	M.RESISTOR CH 1/10W 330	1	
R522		ERJ6GEYJ105	M.RESISTOR CH 1/10W 1M	1	
R523		ERJ6GEYJ103	M.RESISTOR CH 1/10W 10K	1	
R524		ERJ6GEYJ472	M.RESISTOR CH 1/10W 4.7K	1	
R525		ERJ6GEYJ103	M.RESISTOR CH 1/10W 10K	1	
R526		ERJ6GEYJ152	M.RESISTOR CH 1/10W 1.5K	1	
R527		ERJ6GEYJ271	M.RESISTOR CH 1/10W 270	1	
R528		ERJ6GEYJ102	M.RESISTOR CH 1/10W 1K	1	
R529		ERJ6GEYJ332	M.RESISTOR CH 1/10W 3.3K	1	
R530		ERJ6GEYJ473	M.RESISTOR CH 1/10W 47K	1	
R531		ERJ6GEYJ821	M.RESISTOR CH 1/10W 820	1	
R532		ERJ6GEYJ102	M.RESISTOR CH 1/10W 1K	1	
R533,34		ERJ6GEYJ470	M.RESISTOR CH 1/10W 47	2	
R535		ERJ6GEYJ472	M.RESISTOR CH 1/10W 4.7K	1	
R536		ERJ6GEYJ153	M.RESISTOR CH 1/10W 15K	1	
R537		ERJ6GEYJ272	M.RESISTOR CH 1/10W 2.7K	1	
R538		ERJ6GEYJ681	M.RESISTOR CH 1/10W 680	1	
R539		ERJ6GEYJ182	M.RESISTOR CH 1/10W 1.8K	1	
R540		ERJ6GEYJ103	M.RESISTOR CH 1/10W 10K	1	
R541		ERJ6GEYJ104	M.RESISTOR CH 1/10W 100K	1	
R542		ERJ6GEYJ332	M.RESISTOR CH 1/10W 3.3K	1	
R543		ERJ6GEYJ331	M.RESISTOR CH 1/10W 330	1	
R544		ERJ6GEYJ103	M.RESISTOR CH 1/10W 10K	1	
R545		ERJ6GEYJ105	M.RESISTOR CH 1/10W 1M	1	
R546		ERJ6GEYJ472	M.RESISTOR CH 1/10W 4.7K	1	
R547		ERJ6GEYJ103	M.RESISTOR CH 1/10W 10K	1	
R548		ERJ6GEYJ102	M.RESISTOR CH 1/10W 1K	1	
R549		ERJ6GEYJ473	M.RESISTOR CH 1/10W 47K	1	
R550		ERJ6GEYJ222	M.RESISTOR CH 1/10W 2.2K	1	
R552,53		ERJ6GEYJ222	M.RESISTOR CH 1/10W 2.2K	2	
R554		ERJ6GEYJ102	M.RESISTOR CH 1/10W 1K	1	
R555		ERJ6GEYJ332	M.RESISTOR CH 1/10W 3.3K	1	
R556		ERJ6GEYJ222	M.RESISTOR CH 1/10W 2.2K	1	
R557		ERJ6GEYJ182	M.RESISTOR CH 1/10W 1.8K	1	
R558		ERJ6GEYJ222	M.RESISTOR CH 1/10W 2.2K	1	

Refer to the P.C.BOARDS LIST, page 6-1-1, before using this page.

Ref.No.		Part No.	Part Name & Description	Pcs	Remarks
R562,63		ERJ6GEYJ222	M.RESISTOR CH 1/10W 2.2K	2	
R564		ERJ6GEYJ332	M.RESISTOR CH 1/10W 3.3K	1	
R565		ERJ6GEYJ222	M.RESISTOR CH 1/10W 2.2K	1	
R566		ERJ6GEYJ470	M.RESISTOR CH 1/10W 47	1	
R567		ERJ6GEYJ222	M.RESISTOR CH 1/10W 2.2K	1	
R569		ERJ6GEYJ222	M.RESISTOR CH 1/10W 2.2K	1	
R571		ERJ6GEYJ102	M.RESISTOR CH 1/10W 1K	1	
R572		ERJ6GEYJ181	M.RESISTOR CH1/10W 180	1	
R573		ERJ6GEYJ750	M.RESISTOR CH 1/10W 75	1	
R574		ERJ6GEYJ102	M.RESISTOR CH 1/10W 1K	1	
R575		ERJ6GEYJ470	M.RESISTOR CH 1/10W 47	1	
R576		ERJ6GEYJ224	M.RESISTOR CH 1/10W 220K	1	
R577		ERJ6GEYJ684	M.RESISTOR CH 1/10W 680K	1	
R578		ERJ6GEYJ103	M.RESISTOR CH 1/10W 10K	1	
R579		ERJ6GEYJ222	M.RESISTOR CH 1/10W 2.2K	1	
R580		ERJ6GEYJ102	M.RESISTOR CH 1/10W 1K	1	
R581		ERJ6GEYJ222	M.RESISTOR CH 1/10W 2.2K	1	
R582-84		ERJ6GEYJ103	M.RESISTOR CH 1/10W 10K	3	
R585,86		ERJ6GEYJ470	M.RESISTOR CH 1/10W 47	2	
R587,88		ERJ6GEYJ104	M.RESISTOR CH 1/10W 100K	2	
R589		ERJ6GEYJ221	M.RESISTOR CH 1/10W 220	1	
R601,02		ERJ6GEYJ222	M.RESISTOR CH 1/10W 2.2K	2	
R603-10		ERJ6GEYJ152	M.RESISTOR CH 1/10W 1.5K	8	
R613		VRE0034E361	M.RESISTOR CH 1/10W 360	1	
R614,15		VRE0034E102	M.RESISTOR CH 1/10W 1K	2	
R616		VRE0034E272	M.RESISTOR CH 1/10W 2.7K	1	
R617		VRE0034E202	M.RESISTOR CH 1/10W 2K	1	
R618		VRE0034E152	M.RESISTOR CH 1/10W 1.5K	1	
R620		ERJ6GEYJ102	M.RESISTOR CH 1/10W 1K	1	
R621		ERJ6GEYJ103	M.RESISTOR CH 1/10W 10K	1	
R622		ERJ6GEYJ152	M.RESISTOR CH 1/10W 1.5K	1	
R623,24		ERJ6GEYG301	M.RESISTOR CH 1/10W 300	2	
R625		ERJ6GEYJ222	M.RESISTOR CH 1/10W 2.2K	1	
R626,27		ERJ6GEYJ681	M.RESISTOR CH 1/10W 680	2	
R628		ERJ6GEYJ103	M.RESISTOR CH 1/10W 10K	1	
R630		ERJ6GEYJ332	M.RESISTOR CH 1/10W 3.3K	1	
R631		ERJ6GEYJ470	M.RESISTOR CH 1/10W 47	1	
R632		ERJ6GEYJ472	M.RESISTOR CH 1/10W 4.7K	1	
R633		ERJ6GEYJ272	M.RESISTOR CH 1/10W 2.7K	1	
R634		ERJ6GEYJ822	M.RESISTOR CH 1/10W 8.2K	1	
R635		ERJ6GEYJ222	M.RESISTOR CH 1/10W 2.2K	1	
R636		ERJ6GEYJ102	M.RESISTOR CH 1/10W 1K	1	
R638		ERJ6GEYJ332	M.RESISTOR CH 1/10W 3.3K	1	
R640		ERJ6GEYJ101	M.RESISTOR CH 1/10W 100	1	
R641		ERJ6GEYJ102	M.RESISTOR CH 1/10W 1K	1	
R643		ERJ6GEYJ103	M.RESISTOR CH 1/10W 10K	1	
R644		ERJ6GEYJ101	M.RESISTOR CH 1/10W 100	1	
R645		ERJ6GEYJ103	M.RESISTOR CH 1/10W 10K	1	
R646		ERJ6GEYJ101	M.RESISTOR CH 1/10W 100	1	
R647		ERJ6GEYJ222	M.RESISTOR CH 1/10W 2.2K	1	
R648		ERJ6GEYJ330	M.RESISTOR CH1/10W 33	1	
R656		ERJ6GEYJ102	M.RESISTOR CH 1/10W 1K	1	
R701		ERJ6GEYJ103	M.RESISTOR CH 1/10W 10K	1	
R702		ERJ6GEYJ682	M.RESISTOR CH 1/10W 6.8K	1	
R703		ERJ6GEYJ222	M.RESISTOR CH 1/10W 2.2K	1	
R704		ERJ6GEYJ683	M.RESISTOR CH 1/10W 68K	1	
R705		ERJ6GEYJ332	M.RESISTOR CH 1/10W 3.3K	1	
R706,07		ERJ6GEYJ562	M.RESISTOR CH 1/10W 5.6K	2	
R708		ERJ6GEYJ222	M.RESISTOR CH 1/10W 2.2K	1	
R709		ERJ6GEYJ332	M.RESISTOR CH 1/10W 3.3K	1	
R710		ERJ6GEYJ392	M.RESISTOR CH 1/10W 3.9K	1	
R711		ERJ6GEYJ103	M.RESISTOR CH 1/10W 10K	1	
R712		ERJ6GEYJ472	M.RESISTOR CH 1/10W 4.7K	1	
R713		ERJ6GEYJ152	M.RESISTOR CH 1/10W 1.5K	1	
R714		ERJ6GEYJ472	M.RESISTOR CH 1/10W 4.7K	1	
R715		ERJ6GEYJ103	M.RESISTOR CH 1/10W 10K	1	
R716		ERJ6GEYJ153	M.RESISTOR CH 1/10W 15K	1	
R717,18		ERJ6GEYJ104	M.RESISTOR CH 1/10W 100K	2	
R719		ERJ6GEYJ123	M.RESISTOR CH1/10W 12K	1	
R720		ERJ6GEYJ223	M.RESISTOR CH 1/10W 22K	1	
R721,22		ERJ6GEYJ103	M.RESISTOR CH 1/10W 10K	2	
R723		ERJ6GEYJ473	M.RESISTOR CH 1/10W 47K	1	
R724		ERJ6GEYJ104	M.RESISTOR CH 1/10W 100K	1	
R725,26		ERJ6GEYJ472	M.RESISTOR CH 1/10W 4.7K	2	
R727		ERJ6GEYJ103	M.RESISTOR CH 1/10W 10K	1	

Ref.No.		Part No.	Part Name & Description	Pcs	Remarks
R728		ERJ6GEYJ102	M.RESISTOR CH 1/10W 1K	1	
R729		ERJ6GEYJ473	M.RESISTOR CH 1/10W 47K	1	
R731		ERJ6GEYJ393	M.RESISTOR CH 1/10W 39K	1	
R732		ERJ6GEYJ223	M.RESISTOR CH 1/10W 22K	1	
R733		ERJ6GEYJ152	M.RESISTOR CH 1/10W 1.5K	1	
R734		ERJ6GEYJ102	M.RESISTOR CH 1/10W 1K	1	
R735,36		ERJ6GEYJ104	M.RESISTOR CH 1/10W 100K	2	
R737		ERJ6GEYJ152	M.RESISTOR CH 1/10W 1.5K	1	
R738,39		ERJ6GEYJ103	M.RESISTOR CH 1/10W 10K	2	
R748		ERJ6GEYJ103	M.RESISTOR CH 1/10W 10K	1	
R751		ERJ6GEYJ472	M.RESISTOR CH 1/10W 4.7K	1	
R752		ERJ6GEYJ152	M.RESISTOR CH 1/10W 1.5K	1	
R753,54		ERJ6GEYJ332	M.RESISTOR CH 1/10W 3.3K	2	
R755,56		ERJ6GEYJ222	M.RESISTOR CH 1/10W 2.2K	2	
R761		ERJ6GEYJ103	M.RESISTOR CH 1/10W 10K	1	
R762		ERJ6GEYJ822	M.RESISTOR CH 1/10W 8.2K	1	
R763,64		ERJ6GEYJ102	M.RESISTOR CH 1/10W 1K	2	
R765		ERJ6GEYJ332	M.RESISTOR CH 1/10W 3.3K	1	
R766		ERJ6GEYJ470	M.RESISTOR CH 1/10W 47	1	
R769-71		ERJ6GEYJ682	M.RESISTOR CH 1/10W 6.8K	3	
SW201		VSS0126	SWITCH	1	
SW701		VSS0126	SWITCH	1	
TP1		VJR0582	PACK PIN	1	
TP3-P7		VJR0582	PACK PIN	5	
TP201-06		VJR0582	PACK PIN	6	
TP401-05		VJR0582	PACK PIN	5	
TP501,02		VJR0582	PACK PIN	2	
TP504		VJR0582	PACK PIN	1	
TP601		VJR0582	PACK PIN	1	
TP701-04		VJR0582	PACK PIN	4	
TPG201		VJR0582	PACK PIN	1	
TPG501,02		VJR0582	PACK PIN	2	
VC1		ECV1ZW20X53T	V.CAPACITOR 20P	1	
VC201		ECV1ZW50X53T	V.CAPACITOR 50P	1	
VC401		ECV1ZW10X53T	V.CAPACITOR 10P	1	
VL701		VLQ0415	COIL	1	
VR1		VRV0109B501	V.RESISTOR 500	1	
VR2,R3		VRV0109B102	V.RESISTOR 1K	2	
VR6-R9		VRV0109B501	V.RESISTOR 500	4	
VR10		VRV0109B501	V.RESISTOR 500	1	
VR11		VRV0109B102	V.RESISTOR 1K	1	
VR201-03		VRV0109B501	V.RESISTOR 500	3	
VR204,05		VRV0109B202	V.RESISTOR 2K	2	
VR206,07		VRV0109B102	V.RESISTOR 1K	2	
VR212		VRV0109B102	V.RESISTOR 1K	1	
VR213		VRV0109B202	V.RESISTOR 2K	1	
VR214		VRV0109B102	V.RESISTOR 1K	1	
VR215		VRV0109B202	V.RESISTOR 2K	1	
VR216,17		VRV0109B203	V.RESISTOR 20K	2	
VR218		VRV0064B502	V.RESISTOR 5K	1	
VR401,02		VRV0109B102	V.RESISTOR 1K	2	
VR403		VRV0109B103	V.RESISTOR 10K	1	
VR501,02		VRV0109B202	V.RESISTOR 2K	2	
VR503-05		VRV0109B102	V.RESISTOR 1K	3	
VR601,02		VRV0064B201	V.RESISTOR 200	2	
VR603,04		VRV0109B102	V.RESISTOR 1K	2	
VR701		VRV0109B202	V.RESISTOR 2K	1	
VR702-04		VRV0109B502	V.RESISTOR 5K	3	

Refer to the P.C.BOARDS LIST, page 6-1-1, before using this page.

Ref.No.		Part No.	Part Name & Description	Pcs	Remarks
X1		VSX0202	CRYSTAL OSCILLATOR	1	
X201		VSX0338	CRYSTAL OSCILLATOR	1	
X701		VSX0149	CRYSTAL OSCILLATOR	1	
			MISCELLANEOUS		
		VML2143	CARD PULLER	1	
		VML2144	CARD PULLER	1	
		VMS4174	PIN	6	
		VMZ1547	BARRIER	1	
		VSC1220	SHIELD CASE	1	
		VSC1871	SHIELD CASE	1	
		VSC1872	SHIELD CASE	1	
		VSC3056	SHIELD CASE	1	
		VXA3966	P.C.B. SHIELD PLATE	1	
		XNG26E	NUT	4	
		XYNV3+K6FR	SCREW	6	
		XYN26+C12	SCREW	4	

Ref.No.		Part No.	Part Name & Description	Pcs	Remarks
	■	VEP83099B	P.C.BOARD W/COMPONENT		FOR AU-65-E,B
			W4 DEC & CTCM		
			CAPACITORS		
C1		ECEA1HN010S	E.CAPACITOR 50V 1U	1	
C2,C3		ECEA0JN101S	E.CAPACITOR 6.3V 100U	2	
C4,C5		ECUM1H050DCN	C.CAPACITOR CH 50V 50P	2	
C6		ECUM1H103KBN	C.CAPACITOR CH 50V 0.01U	1	
C7		ECEA1CU470	E.CAPACITOR 16V 47U	1	
C8		ECUM1H103KBN	C.CAPACITOR CH 50V 0.01U	1	
C9		ECEA1CU470	E.CAPACITOR 16V 47U	1	
C10		ECUM1H103KBN	C.CAPACITOR CH 50V 0.01U	1	
C11		ECEA1CN101S	E.CAPACITOR 16V 100U	1	
C12		ECUM1H103KBN	C.CAPACITOR CH 50V 0.01U	1	
C13		ECEA1CU470	E.CAPACITOR 16V 47U	1	
C14,15		ECUM1H103KBN	C.CAPACITOR CH 50V 0.01U	2	
C16		ECUM1H820JCN	C.CAPACITOR CH 50V 82P	1	
C17		ECUM1H103KBN	C.CAPACITOR CH 50V 0.01U	1	
C18		ECEA1CU470	E.CAPACITOR 16V 47U	1	
C19		ECUM1H180JCN	C.CAPACITOR CH 50V 18P	1	
C20		ECUM1H820JCN	C.CAPACITOR CH 50V 82P	1	
C21,22		ECUM1H104KBM	C.CAPACITOR CH 50V 0.1U	2	
C23		ECEA1HN010S	E.CAPACITOR 50V 1U	1	
C24		ECUM1H101JCN	C.CAPACITOR CH 50V 100P	1	
C25		ECUM1H103KBN	C.CAPACITOR CH 50V 0.01U	1	
C26		ECEA1CU470	E.CAPACITOR 16V 47U	1	
C27		ECUM1H103KBN	C.CAPACITOR CH 50V 0.01U	1	
C28		ECEA1CU470	E.CAPACITOR 16V 47U	1	
C29		ECUM1H680JCN	C.CAPACITOR CH 50V 68P	1	
C30		ECUM1H103KBN	C.CAPACITOR CH 50V 0.01U	1	
C32		ERJ6GEY0R00	M.RESISTOR CH 1/10W 0	1	
C35		ECUM1H103KBN	C.CAPACITOR CH 50V 0.01U	1	
C40		ECUM1H103KBN	C.CAPACITOR CH 50V 0.01U	1	
C41		ECUM1H220JCN	C.CAPACITOR CH 50V 22P	1	
C42		ECUM1H103KBN	C.CAPACITOR CH 50V 0.01U	1	
C116		ECUM1H103KBN	C.CAPACITOR CH 50V 0.01U	1	
C118		ECUM1H103KBN	C.CAPACITOR CH 50V 0.01U	1	
C121		ECUM1H103KBN	C.CAPACITOR CH 50V 0.01U	1	
C122		ECEA1CU470	E.CAPACITOR 16V 47U	1	
C123		ECUM1H820JCN	C.CAPACITOR CH 50V 82P	1	
C124		ECUM1H103KBN	C.CAPACITOR CH 50V 0.01U	1	
C125		ECUM1H104KBM	C.CAPACITOR CH 50V 0.1U	1	
C140		ECUM1H220JCN	C.CAPACITOR CH 50V 22P	1	
C161		ECUM1E104ZFN	C.CAPACITOR CH 25V 0.1U	1	
C164		ECUM1H103KBN	C.CAPACITOR CH 50V 0.01U	1	
C165		ECEA1CU100	E.CAPACITOR 16V 10U	1	
C166		ECUM1H103KBN	C.CAPACITOR CH 50V 0.01U	1	
C167		ECEA1CU100	E.CAPACITOR 16V 10U	1	
C168		ECUM1E104ZFN	C.CAPACITOR CH 25V 0.1U	1	
C169		ECUM1H103KBN	C.CAPACITOR CH 50V 0.01U	1	
C170		ECEA1CU100	E.CAPACITOR 16V 10U	1	
C171		ECUM1E104ZFN	C.CAPACITOR CH 25V 0.1U	1	
C172		ECUM1H103KBN	C.CAPACITOR CH 50V 0.01U	1	
C173		ECEA1CU100	E.CAPACITOR 16V 10U	1	
C174		ECUM1E104ZFN	C.CAPACITOR CH 25V 0.1U	1	
C175		ECUM1H103KBN	C.CAPACITOR CH 50V 0.01U	1	
C176		ECEA1CU100	E.CAPACITOR 16V 10U	1	
C201,02		ECUM1H103KBN	C.CAPACITOR CH 50V 0.01U	2	
C203		ECEA1CU470	E.CAPACITOR 16V 47U	1	
C204		ECUM1H103KBN	C.CAPACITOR CH 50V 0.01U	1	
C205		ECEA1CU470	E.CAPACITOR 16V 47U	1	
C206		ECQM1H104JF	P.CAPACITOR 50V 0.1U	1	
C207		ECQM1H103JF	P.CAPACITOR 50V 0.01U	1	
C208		ECQM1H104JF	P.CAPACITOR 50V 0.1U	1	
C209		ECUM1H104KBM	C.CAPACITOR CH 50V 0.1U	1	
C210-12		ECUM1H103KBN	C.CAPACITOR CH 50V 0.01U	3	
C218		ECUM1H471JCN	C.CAPACITOR CH 50V 470P	1	
C219		ECUM1H103KBN	C.CAPACITOR CH 50V 0.01U	1	
C220		ECEA1CU470	E.CAPACITOR 16V 47U	1	
C221		ECUM1H103KBN	C.CAPACITOR CH 50V 0.01U	1	
C222		ECEA1CU470	E.CAPACITOR 16V 47U	1	
C223		ECUM1H020CCN	C.CAPACITOR CH 50V 2P	1	
C224		ECUM1H220JCN	C.CAPACITOR CH 50V 22P	1	
C225		ECUM1H470JCN	C.CAPACITOR CH 50V 47P	1	
C226		ECUM1H560JCN	C.CAPACITOR CH 50V 56P	1	
C227-31		ECUM1H103KBN	C.CAPACITOR CH 50V 0.01U	5	
C232		ECUM1H331JCN	C.CAPACITOR CH 50V 330P	1	
C233-35		ECUM1H104KBM	C.CAPACITOR CH 50V 0.1U	3	
C238		ECUM1H103KBN	C.CAPACITOR CH 50V 0.01U	1	
C240		ECUM1H103KBN	C.CAPACITOR CH 50V 0.01U	1	
C241		ECUM1H104KBM	C.CAPACITOR CH 50V 0.1U	1	
C244		ECEA1CN221S	E.CAPACITOR 16V 220U	1	
C245		ECUM1H080DCN	C.CAPACITOR CH 50V 80P	1	
C246		ECUM1H020CCN	C.CAPACITOR CH 50V 2P	1	
C247		ECUM1H103KBN	C.CAPACITOR CH 50V 0.01U	1	
C248		ECEA1CU470	E.CAPACITOR 16V 47U	1	
C249		ECUM1H103KBN	C.CAPACITOR CH 50V 0.01U	1	
C250		ECEA1CU470	E.CAPACITOR 16V 47U	1	
C251		ECUM1H103KBN	C.CAPACITOR CH 50V 0.01U	1	
C252		ECEA1CU470	E.CAPACITOR 16V 47U	1	
C273		ECUM1H103KBN	C.CAPACITOR CH 50V 0.01U	1	
C275,76		ECUM1H103KBN	C.CAPACITOR CH 50V 0.01U	2	
C280		ECUM1H103KBN	C.CAPACITOR CH 50V 0.01U	1	
C284		ECUM1H103KBN	C.CAPACITOR CH 50V 0.01U	1	
C286		ECEA1CU470	E.CAPACITOR 16V 47U	1	
C287		ECUM1H103KBN	C.CAPACITOR CH 50V 0.01U	1	
C288		ECUM1H180JCN	C.CAPACITOR CH 50V 18P	1	
C289		ECUM1H040DCN	C.CAPACITOR CH 50V 4P	1	
C290		ECUM1H680JCN	C.CAPACITOR CH 50V 68P	1	
C291		ECUM1H080DCN	C.CAPACITOR CH 50V 80P	1	
C292		ECUM1H680JCN	C.CAPACITOR CH 50V 68P	1	
C293		ECEA1CU470	E.CAPACITOR 16V 47U	1	
C294		ECEA0JU101	E.CAPACITOR 6.3V 100U	1	
C295		ECEA0JN101S	E.CAPACITOR 6.3V 100U	1	
C296		ECUM1H180JCN	C.CAPACITOR CH 50V 18P	1	
C297		ECUM1H040DCN	C.CAPACITOR CH 50V 4P	1	
C298		ECUM1H680JCN	C.CAPACITOR CH 50V 68P	1	
C299		ECUM1H080DCN	C.CAPACITOR CH 50V 80P	1	
C300		ECUM1H680JCN	C.CAPACITOR CH 50V 68P	1	
C301		ECEA1CU470	E.CAPACITOR 16V 47U	1	
C302		ECEA0JU101	E.CAPACITOR 6.3V 100U	1	
C303		ECEA0JN101S	E.CAPACITOR 6.3V 100U	1	
C304		ECEA1CU470	E.CAPACITOR 16V 47U	1	
C305		ECUM1H103KBN	C.CAPACITOR CH 50V 0.01U	1	
C306		ECEA1CU470	E.CAPACITOR 16V 47U	1	
C307-10		ECUM1H103KBN	C.CAPACITOR CH 50V 0.01U	4	
C311		ECEA1HNR47S	E.CAPACITOR 50V 0.47U	1	
C312		ECUM1C104KBN	C.CAPACITOR CH 16V 0.1U	1	
C313		ECUM1H103KBN	C.CAPACITOR CH 50V 0.01U	1	
C316-18		ECUM1H103KBN	C.CAPACITOR CH 50V 0.01U	3	
C319		ECUM1H220JCN	C.CAPACITOR CH 50V 22P	1	
C327		ECEA0JN101S	E.CAPACITOR 6.3V 100U	1	
C328		ECEA1CU470	E.CAPACITOR 16V 47U	1	
C329		ECUM1H103KBN	C.CAPACITOR CH 50V 0.01U	1	
C401		ECEA1CU470	E.CAPACITOR 16V 47U	1	
C402,03		ECUM1H103KBN	C.CAPACITOR CH 50V 0.01U	2	
C404		ECUM1H102JCN	C.CAPACITOR CH 50V 1000P	1	
C405		ECUM1H103KBN	C.CAPACITOR CH 50V 0.01U	1	
C406		ECUM1H121JCN	C.CAPACITOR CH 50V 120P	1	
C407		ERJ6GEY0R00	M.RESISTOR CH 1/10W 0	1	
C408		ECUM1H103KBN	C.CAPACITOR CH 50V 0.01U	1	
C409		ECUM1H121JCN	C.CAPACITOR CH 50V 120P	1	
C410		ECUM1H103KBN	C.CAPACITOR CH 50V 0.01U	1	
C411		ECUM1H121JCN	C.CAPACITOR CH 50V 120P	1	
C412		ECUM1H080DCN	C.CAPACITOR CH 50V 80P	1	
C413		ECUM1H120JCN	C.CAPACITOR CH 50V 12P	1	
C501		ECUM1H103KBN	C.CAPACITOR CH 50V 0.01U	1	
C502		ECEA1CU470	E.CAPACITOR 16V 47U	1	
C503		ECUM1H103KBN	C.CAPACITOR CH 50V 0.01U	1	
C504		ECEA1CU470	E.CAPACITOR 16V 47U	1	
C505		ECUM1H330JCN	C.CAPACITOR CH 50V 33P	1	
C509		ECUM1H104KBM	C.CAPACITOR CH 50V 0.1U	1	
C510		ECEA1CU470	E.CAPACITOR 16V 47U	1	

Refer to the P.C.BOARDS LIST, page 6-1-1, before using this page.

Ref.No.		Part No.	Part Name & Description	Pcs	Remarks
C511		ECUM1H104KBM	C.CAPACITOR CH 50V 0.1U	1	
C513		ECUM1H103KBN	C.CAPACITOR CH 50V 0.01U	1	
C517		ECUM1H330JCN	C.CAPACITOR CH 50V 33P	1	
C520		ECUM1H103KBN	C.CAPACITOR CH 50V 0.01U	1	
C521		ECUM1H104KBM	C.CAPACITOR CH 50V 0.1U	1	
C522		ECEA1CU470	E.CAPACITOR 16V 47U	1	
C523		ECUM1H104KBM	C.CAPACITOR CH 50V 0.1U	1	
C524		ECUM1H103KBN	C.CAPACITOR CH 50V 0.01U	1	
C525		ECEA1CU470	E.CAPACITOR 16V 47U	1	
C526		ECUM1H470JCN	C.CAPACITOR CH 50V 47P	1	
C527		ECUM1H180JCN	C.CAPACITOR CH 50V 18P	1	
C528		ECUM1H104KBM	C.CAPACITOR CH 50V 0.1U	1	
C529		ECUM1H470JCN	C.CAPACITOR CH 50V 47P	1	
C531		ECUM1H103KBN	C.CAPACITOR CH 50V 0.01U	1	
C532		ECEA1CU470	E.CAPACITOR 16V 47U	1	
C533,34		ECUM1H270JCN	C.CAPACITOR CH 50V 27P	2	
C535		ECUM1H180JCN	C.CAPACITOR CH 50V 18P	1	
C536		ECUM1H470JCN	C.CAPACITOR CH 50V 47P	1	
C537		ECUM1H104KBM	C.CAPACITOR CH 50V 0.1U	1	
C540		ECUM1H103KBN	C.CAPACITOR CH 50V 0.01U	1	
C541		ECEA1CU470	E.CAPACITOR 16V 47U	1	
C542		ECUM1H103KBN	C.CAPACITOR CH 50V 0.01U	1	
C543		ECEA1CU470	E.CAPACITOR 16V 47U	1	
C544		ECUM1H080DCN	C.CAPACITOR CH 50V 80P	1	
C545		ECEA1CU470	E.CAPACITOR 16V 47U	1	
C548		ECUM1H104KBM	C.CAPACITOR CH 50V 0.1U	1	
C550,51		ECUM1H103KBN	C.CAPACITOR CH 50V 0.01U	2	
C552		ECUM1H820JCN	C.CAPACITOR CH 50V 82P	1	
C553		ECUM1H390JCN	C.CAPACITOR CH 50V 39P	1	
C554		ECUM1H181JCN	C.CAPACITOR CH 50V 180P	1	
C555-57		ECUM1H104KBM	C.CAPACITOR CH 50V 0.1U	3	
C558		ECEA1HN010S	E.CAPACITOR 50V 1U	1	
C559-61		ECUM1H103KBN	C.CAPACITOR CH 50V 0.01U	3	
C562		ECEA1CU100	E.CAPACITOR 16V 10U	1	
C563		ECUM1E104ZFN	C.CAPACITOR CH 25V 0.1U	1	
C564		ECUM1H103KBN	C.CAPACITOR CH 50V 0.01U	1	
C565		ECEA1CU100	E.CAPACITOR 16V 10U	1	
C566		ECUM1E104ZFN	C.CAPACITOR CH 25V 0.1U	1	
C567		ECUM1H103KBN	C.CAPACITOR CH 50V 0.01U	1	
C568		ECEA1CU100	E.CAPACITOR 16V 10U	1	
C569		ECUM1E104ZFN	C.CAPACITOR CH 25V 0.1U	1	
C570		ECUM1H103KBN	C.CAPACITOR CH 50V 0.01U	1	
C571		ECEA1CU100	E.CAPACITOR 16V 10U	1	
C572		ECUM1E104ZFN	C.CAPACITOR CH 25V 0.1U	1	
C573		ECUM1H103KBN	C.CAPACITOR CH 50V 0.01U	1	
C574		ECEA1CU100	E.CAPACITOR 16V 10U	1	
C601-04		ECUM1H222KBN	C.CAPACITOR CH 50V 2200P	4	
C605		ECEA1AKG330	E.CAPACITOR 10V 33U	1	
C606,07		ECUM1H222KBN	C.CAPACITOR CH 50V 2200P	2	
C608		ECEA1AKG330	E.CAPACITOR 10V 33U	1	
C609-14		ECUM1H222KBN	C.CAPACITOR CH 50V 2200P	6	
C615		ECEA1AKG330	E.CAPACITOR 10V 33U	1	
C616		ECUM1H222KBN	C.CAPACITOR CH 50V 2200P	1	
C617		ECEA1AKG330	E.CAPACITOR 10V 33U	1	
C618-21		ECUM1H222KBN	C.CAPACITOR CH 50V 2200P	4	
C622		ECEA1AKG330	E.CAPACITOR 10V 33U	1	
C623,24		ECUM1H222KBN	C.CAPACITOR CH 50V 2200P	2	
C626-31		ECUM1H222KBN	C.CAPACITOR CH 50V 2200P	6	
C633		ECUM1H222KBN	C.CAPACITOR CH 50V 2200P	1	
C634		ECEA1AKG330	E.CAPACITOR 10V 33U	1	
C635-38		ECUM1E104ZFN	C.CAPACITOR CH 25V 0.1U	4	
C639		ECUM1H103KBN	C.CAPACITOR CH 50V 0.01U	1	
C640		ECEA0JU101	E.CAPACITOR 6.3V 100U	1	
C641,42		ECUM1E104ZFN	C.CAPACITOR CH 25V 0.1U	2	
C643		ECEA0JU330	E.CAPACITOR 6.3V 33U	1	
C645		ECUM1H103KBN	C.CAPACITOR CH 50V 0.01U	1	
C646		ECEA0JU330	E.CAPACITOR 6.3V 33U	1	
C647		ECUM1E104ZFN	C.CAPACITOR CH 25V 0.1U	1	
C648		ECEA1HU2R2	E.CAPACITOR 50V 2.2U	1	
C649		ECUM1H103KBN	C.CAPACITOR CH 50V 0.01U	1	
C650		ECEA1CKG470	E.CAPACITOR 16V 47U	1	
C651-53		ECUM1H103KBN	C.CAPACITOR CH 50V 0.01U	3	
C655		ECUM1E104ZFN	C.CAPACITOR CH 25V 0.1U	1	
C657		ECEA1CU101	E.CAPACITOR 16V 100U	1	
C658		ECUM1H050DCN	C.CAPACITOR CH 50V 50P	1	

Ref.No.		Part No.	Part Name & Description	Pcs	Remarks
C659		ECUM1H103KBN	C.CAPACITOR CH 50V 0.01U	1	
C660		ECEA1CU470	E.CAPACITOR 16V 47U	1	
C661		ECUM1H103KBN	C.CAPACITOR CH 50V 0.01U	1	
C662		ECEA1CU470	E.CAPACITOR 16V 47U	1	
C663		ECUM1H270JCN	C.CAPACITOR CH 50V 27P	1	
C664		ECUM1H221JCN	C.CAPACITOR CH 50V 220P	1	
C665		ECUM1H680JCN	C.CAPACITOR CH 50V 68P	1	
C666,67		ECEA1CU470	E.CAPACITOR 16V 47U	2	
C668		ECEA1CU101	E.CAPACITOR 16V 100U	1	
C679		ECUM1H470JCN	C.CAPACITOR CH 50V 47P	1	
C680-83		ECUM1H222KBN	C.CAPACITOR CH 50V 2200P	4	
C701		ECUM1H470JCN	C.CAPACITOR CH 50V 47P	1	
C702		ECUM1H103KBN	C.CAPACITOR CH 50V 0.01U	1	
C703		ECEA1CU470	E.CAPACITOR 16V 47U	1	
C704		ECUM1H331JCN	C.CAPACITOR CH 50V 330P	1	
C708		ECUM1H103KBN	C.CAPACITOR CH 50V 0.01U	1	
C709		ECEA1CU470	E.CAPACITOR 16V 47U	1	
C710		ECUM1H103KBN	C.CAPACITOR CH 50V 0.01U	1	
C711		ECUM1H102JCN	C.CAPACITOR CH 50V 1000P	1	
C712		ECUM1H820JCN	C.CAPACITOR CH 50V 82P	1	
C713,14		ECUM1H103KBN	C.CAPACITOR CH 50V 0.01U	2	
C715		ECEA1CU470	E.CAPACITOR 16V 47U	1	
C716		ECUM1H103KBN	C.CAPACITOR CH 50V 0.01U	1	
C717		ECUM1H331JCN	C.CAPACITOR CH 50V 330P	1	
C718-20		ECUM1H103KBN	C.CAPACITOR CH 50V 0.01U	3	
C721		ECQM1H122JF	P.CAPACITOR 50V 1200P	1	
C722-24		ECUM1H103KBN	C.CAPACITOR CH 50V 0.01U	3	
C725		ECEA1HN2R2S	E.CAPACITOR 50V 2.2U	1	
C726		ECEA1HNR47S	E.CAPACITOR 50V 0.47U	1	
C727		ECEA1HN010S	E.CAPACITOR 50V 1U	1	
C728		ECEA1HN2R2S	E.CAPACITOR 50V 2.2U	1	
C729		ECUM1H680JCN	C.CAPACITOR CH 50V 68P	1	
C730		ECUM1H103KBN	C.CAPACITOR CH 50V 0.01U	1	
C731		ECUM1H070DCN	C.CAPACITOR CH 50V 7P	1	
C732,33		ECUM1H103KBN	C.CAPACITOR CH 50V 0.01U	2	
C734		ECUM1H680JCN	C.CAPACITOR CH 50V 68P	1	
C735		ECUM1H471JCN	C.CAPACITOR CH 50V 470P	1	
C736		ECUM1H101JCN	C.CAPACITOR CH 50V 100P	1	
C737,38		ECEA1CU100	E.CAPACITOR 16V 10U	2	
C739		ECUM1H050DCN	C.CAPACITOR CH 50V 50P	1	
C740		ECUM1H103KBN	C.CAPACITOR CH 50V 0.01U	1	
C743,44		ECUM1H103KBN	C.CAPACITOR CH 50V 0.01U	2	
C745,46		ECUM1H102JCN	C.CAPACITOR CH 50V 1000P	2	
C749		ECUM1H103KBN	C.CAPACITOR CH 50V 0.01U	1	
C750		ECUM1H390JCN	C.CAPACITOR CH 50V 39P	1	
C751		ECEA0JU220	E.CAPACITOR 6.3V 22U	1	
C752		ECUM1H103KBN	C.CAPACITOR CH 50V 0.01U	1	
C753		ECUM1H221JCN	C.CAPACITOR CH 50V 220P	1	
C761		ECUM1H220JCN	C.CAPACITOR CH 50V 22P	1	
C762		ECUM1H050DCN	C.CAPACITOR CH 50V 50P	1	
C763,64		ECUM1H560JCN	C.CAPACITOR CH 50V 56P	2	
D1		MA151WK	DIODE	1	
D5		MA151K	DIODE	1	
D7		MA151WK	DIODE	1	
D8		MA151WA	DIODE	1	
D201,02		MA335-R	DIODE	2	
D203,04		MA704	DIODE	2	
D205		MA151K	DIODE	1	
D206		MA151WA	DIODE	1	
D207		MA151K	DIODE	1	
D501		MA151K	DIODE	1	
D502		MA151WK	DIODE	1	
D601,02		MA704	DIODE	2	
D603		1S250	DIODE	1	
D701		MA151K	DIODE	1	
D702		MA704	DIODE	1	
D703		MA151K	DIODE	1	
D704,05		MA153	DIODE	2	
D706,07		MA335-R	DIODE	2	
D708		MA151WA	DIODE	1	
D709		MA151WK	DIODE	1	
D710,11		MA151WA	DIODE	2	

Refer to the P.C.BOARDS LIST, page 6-1-1, before using this page.

Ref.No.		Part No.	Part Name & Description	Pcs	Remarks
D712		MA151K	DIODE	1	
DL1,L2		VLD0197	DELAY	2	
DL4		VLD0082	DELAY LINE	1	
DL201		VLD0082	DELAY LINE	1	
FL201,02		VLF0576	FILTER	2	
FL401		VLF0576	FILTER	1	
FL501,02		VLF0753	FILTER	2	
FL601-04		VLF0576	FILTER	4	
FL605		VLF0754	FILTER	1	
IC1		NJM4558M	IC	1	
IC2		VCR0133	IC	1	
IC3		UPD4053BG	IC	1	
IC4		AN91A12S	IC	1	
IC11		AN78M09	IC	1	
IC12		AN78L07	IC	1	
IC13		AN78N05	IC	1	
IC14		AN79N09	IC	1	
IC15		AN79M05F	IC	1	
IC201		UPD4053BG	IC	1	
IC205		AN612	IC	1	
IC206		MC74HC4053F	IC	1	
IC207		TL082CPS	IC	1	
IC209		UPD4053BG	IC	1	
IC210		NE5539D	IC	1	
IC211,12		UPD4053BG	IC	2	
IC214		AN6041	IC	1	
IC215,16		UPD4053BG	IC	2	
IC217		TL082CPS	IC	1	
IC218		UPD4053BG	IC	1	
IC219,20		TL082CPS	IC	2	
IC224		LM311M	IC	1	
IC401		TC74HC221AF	IC	1	
IC402		SN74LS221NS	IC	1	
IC403		UPD65013BC16	IC	1	
IC404		MC74HC04AF	IC	1	
IC501		TL082CPS	IC	1	
IC503		MC74HC4053F	IC	1	
IC505		AN91A12S	IC	1	
IC506		AN78N09	IC	1	
IC507		AN78N05	IC	1	
IC508		AN79N09	IC	1	
IC509		AN79N05	IC	1	
IC510		UPD4053BG	IC	1	
IC601,02		HA19211BNT	IC	2	
IC603,04		UPD41101C-1	IC	2	
IC605		MC74HC574F	IC	1	
IC606		HA19510	IC	1	
IC607		RC3415M	IC	1	
IC609		AN78L05	IC	1	
IC610		NJM2233BMA	IC	1	
IC703		SN74LS221NS	IC	1	
IC704		MC74HC157AF	IC	1	
IC705		MC74HC74AF	IC	1	
IC706		TL082CPS	IC	1	
IC707		MC74HC4053F	IC	1	
IC708		TL084CNS	IC	1	
IC709		MC74HC00AF	IC	1	
IC710		SN74LS221NS	IC	1	
IC711		MC74HC04AF	IC	1	
IC712		MC74HC14AF	IC	1	
IC713		UPD65013FC25	IC	1	
IC714		MC74HC163F	IC	1	
L1-L6		VLQEL05F101K	COIL 100UH	6	

Ref.No.		Part No.	Part Name & Description	Pcs	Remarks
L18		VLQEL05F101K	COIL 100UH	1	
L19		VLQEL05S221J	COIL 220UH	1	
L28		VLQEL05S470J	COIL 47UH	1	
L201,02		VLQEL05F101K	COIL 100UH	2	
L204-06		VLQEL05F101K	COIL 100UH	3	
L208,09		VLQEL05F101K	COIL 100UH	2	
L212		VLQEL05F101K	COIL 100UH	1	
L214		VLQEL05S180J	COIL 18UH	1	
L215		VLQEL05S4R7J	COIL 4.7UH	1	
L216		VLQEL05S181J	COIL 180UH	1	
L220,21		VLQEL05S560J	COIL 56UH	2	
L401		VLQEL05S470J	COIL 47UH	1	
L501,02		VLQEL05F101K	COIL 100UH	2	
L505		VLQEL05F101K	COIL 100UH	1	
L506		VLQEL05S470J	COIL 47UH	1	
L507		VLQEL05F101K	COIL 100UH	1	
L508		VLQEL05S470J	COIL 47UH	1	
L509,10		VLQEL05F101K	COIL 100UH	2	
L513		VLQEL05S471J	COIL 470UH	1	
L601-03		VLP0017	COIL	3	
L604		VLQEL05S221K	COIL 220UH	1	
L606,07		VLQEL05F101K	COIL 100UH	2	
L608		VLQEL05S820J	COIL 82UH	1	
L701		VLQEL05F101K	COIL 100UH	1	
L703,04		VLQEL05F101K	COIL 100UH	2	
L705		VLQEL05S3R3J	COIL 3.3UH	1	
L706		VLQEL05S1R5J	COIL 1.5UH	1	
L707		VLQEL05S560J	COIL 56UH	1	
Q1		2SC2295	TRANSISTOR CHIP	1	(B,C)
Q2		2SD601	TRANSISTOR CHIP	1	(Q,R)
Q3		2SB709	TRANSISTOR CHIP	1	(Q,R)
Q4		UN2112	TRANSISTOR-RESISTOR	1	
Q5		2SK374	TRANSISTOR	1	
Q6		2SD601	TRANSISTOR CHIP	1	(Q,R)
Q7		2SB709	TRANSISTOR CHIP	1	(Q,R)
Q8		2SD601	TRANSISTOR CHIP	1	(Q,R)
Q9		2SC2295	TRANSISTOR CHIP	1	(B,C)
Q10		2SC3757	TRANSISTOR	1	(Q,R)
Q11		2SB709	TRANSISTOR CHIP	1	(Q,R)
Q12-15		2SC2295	TRANSISTOR CHIP	4	(B,C)
Q17		2SD601	TRANSISTOR CHIP	1	(Q,R)
Q58		2SC2295	TRANSISTOR	1	(B)
Q59		2SB709	TRANSISTOR CHIP	1	(Q,R)
Q60		2SD601	TRANSISTOR CHIP	1	(Q,R)
Q61		UN2112	TRANSISTOR-RESISTOR	1	
Q62		2SD601	TRANSISTOR CHIP	1	(Q,R)
Q64		UN2212	TRANSISTOR-RESISTOR	1	
Q201,02		2SC2295	TRANSISTOR CHIP	2	(B,C)
Q203,04		2SA1022-C	TRANSISTOR CHIP	2	(B,C)
Q205		2SD601	TRANSISTOR CHIP	1	(Q,R)
Q206		2SC2295	TRANSISTOR CHIP	1	(B,C)
Q207		2SD601	TRANSISTOR CHIP	1	(Q,R)
Q209		2SC2295	TRANSISTOR CHIP	1	(B,C)
Q210		2SA1022-C	TRANSISTOR CHIP	1	(B,C)
Q212		2SC2295	TRANSISTOR CHIP	1	(B,C)
Q213		2SD601	TRANSISTOR CHIP	1	(Q,R)
Q214,15		2SB709	TRANSISTOR CHIP	2	(Q,R)
Q216		2SD601	TRANSISTOR CHIP	1	(Q,R)
Q217		2SC2295	TRANSISTOR CHIP	1	(B,C)
Q218		2SA1022-C	TRANSISTOR CHIP	1	(B,C)
Q219		2SB709	TRANSISTOR CHIP	1	(Q,R)
Q230		2SB709	TRANSISTOR CHIP	1	(Q,R)
Q231,32		2SD601	TRANSISTOR CHIP	2	(Q,R)
Q233		2SC2404	TRANSISTOR CHIP	1	(C,D)
Q234		2SB709	TRANSISTOR CHIP	1	(Q,R)
Q235,36		2SD601	TRANSISTOR CHIP	2	(Q,R)
Q237		2SC2404	TRANSISTOR CHIP	1	(C,D)
Q238,39		2SB709	TRANSISTOR CHIP	2	(Q,R)
Q240		UN2212	TRANSISTOR-RESISTOR	1	
Q241,42		2SB709	TRANSISTOR CHIP	2	(Q,R)
Q243		2SD601	TRANSISTOR CHIP	1	(Q,R)
Q401,02		UN2212	TRANSISTOR-RESISTOR	2	

Refer to the P.C.BOARDS LIST, page 6-1-1, before using this page.

Ref.No.		Part No.	Part Name & Description	Pcs	Remarks
Q501,02		2SD601	TRANSISTOR CHIP	2	(Q,R)
Q503,04		2SC2295	TRANSISTOR CHIP	2	(B,C)
Q506		2SC2295	TRANSISTOR CHIP	1	(B,C)
Q507		2SK374	TRANSISTOR	1	
Q509,10		2SD601	TRANSISTOR CHIP	2	(Q,R)
Q511,12		2SC2295	TRANSISTOR CHIP	2	(B,C)
Q514		2SC2295	TRANSISTOR CHIP	1	(B,C)
Q515		2SK374	TRANSISTOR	1	
Q517		2SB709	TRANSISTOR CHIP	1	(Q,R)
Q518,19		2SD601	TRANSISTOR CHIP	2	(Q,R)
Q520		2SB709	TRANSISTOR CHIP	1	(Q,R)
Q521		2SD601	TRANSISTOR CHIP	1	(Q,R)
Q522		2SB709	TRANSISTOR CHIP	1	(Q,R)
Q523		2SD601	TRANSISTOR CHIP	1	(Q,R)
Q525		2SA1022-C	TRANSISTOR CHIP	1	(B,C)
Q601		2SD601	TRANSISTOR CHIP	1	(Q,R)
Q602		2SA1022-C	TRANSISTOR CHIP	1	(B,C)
Q603		2SB709	TRANSISTOR CHIP	1	(Q,R)
Q604-06		2SC2295	TRANSISTOR CHIP	3	(B,C)
Q609		2SB709	TRANSISTOR CHIP	1	(Q,R)
Q701		2SD601	TRANSISTOR CHIP	1	(Q,R)
Q702		2SC2404	TRANSISTOR CHIP	1	(C,D)
Q703		2SD601	TRANSISTOR CHIP	1	(Q,R)
Q704		UN2112	TRANSISTOR-RESISTOR	1	
Q705		2SC3757	TRANSISTOR	1	(Q,R)
Q706		2SD601	TRANSISTOR CHIP	1	(Q,R)
Q707		2SC3757	TRANSISTOR	1	(Q,R)
Q708,09		2SA1226	TRANSISTOR	2	
Q710		2SC3757	TRANSISTOR	1	(Q,R)
Q711		2SB709	TRANSISTOR CHIP	1	(Q,R)
Q712		UN2212	TRANSISTOR-RESISTOR	1	
			RESISTORS		
R1		ERJ6GEYJ471	M.RESISTOR CH 1/10W 470	1	
R2,R3		ERJ6GEYG122	M.RESISTOR CH 1/10W 1.2K	2	
R4		ERJ6GEYJ332	M.RESISTOR CH 1/10W 3.3K	1	
R5,R6		ERJ6GEYJ152	M.RESISTOR CH 1/10W 1.5K	2	
R7		ERJ6GEYJ122	M.RESISTOR CH 1/10W 1.2K	1	
R8		ERJ6GEYJ332	M.RESISTOR CH 1/10W 3.3K	1	
R9		ERJ6GEYJ103	M.RESISTOR CH 1/10W 10K	1	
R10		ERJ6GEYJ103	M.RESISTOR CH 1/10W 10K	1	
R11		ERJ6GEYJ472	M.RESISTOR CH 1/10W 4.7K	1	
R12		ERJ6GEYJ224	M.RESISTOR CH 1/10W 220K	1	
R13		ERJ6GEYJ684	M.RESISTOR CH 1/10W 680K	1	
R14		ERJ6GEYJ103	M.RESISTOR CH 1/10W 10K	1	
R15		ERJ6GEYJ222	M.RESISTOR CH 1/10W 2.2K	1	
R16		ERJ6GEYJ102	M.RESISTOR CH 1/10W 1K	1	
R17		ERJ6GEYJ222	M.RESISTOR CH 1/10W 2.2K	1	
R18,19		ERJ6GEYJ333	M.RESISTOR CH 1/10W 33K	2	
R20		ERJ6GEYJ102	M.RESISTOR CH 1/10W 1K	1	
R22		ERJ6GEYJ332	M.RESISTOR CH 1/10W 3.3K	1	
R23		ERJ6GEYJ101	M.RESISTOR CH 1/10W 100	1	
R24		ERJ6GEYJ682	M.RESISTOR CH 1/10W 6.8K	1	
R25		ERJ6GEYJ101	M.RESISTOR CH 1/10W 100	1	
R26		ERJ6GEYJ102	M.RESISTOR CH 1/10W 1K	1	
R27		ERJ6GEYJ103	M.RESISTOR CH 1/10W 10K	1	
R28		ERJ6GEYJ182	M.RESISTOR CH 1/10W 1.8K	1	
R29		ERJ6GEYJ152	M.RESISTOR CH 1/10W 1.5K	1	
R30		ERJ6GEYJ821	M.RESISTOR CH 1/10W 820	1	
R31		ERJ6GEYJ222	M.RESISTOR CH 1/10W 2.2K	1	
R32		ERJ6GEY0R00	M.RESISTOR CH 1/10W 0	1	
R36		ERJ6GEYG181	M.RESISTOR CH 1/10W 180	1	
R37		ERJ6GEYJ471	M.RESISTOR CH 1/10W 470	1	
R38		ERJ6GEYJ102	M.RESISTOR CH 1/10W 1K	1	
R39		ERJ6GEYG181	M.RESISTOR CH 1/10W 180	1	
R40		ERJ6GEYJ221	M.RESISTOR CH 1/10W 220	1	
R42,43		ERJ6GEYJ331	M.RESISTOR CH 1/10W 330	2	
R44,45		ERJ6GEYJ681	M.RESISTOR CH 1/10W 680	2	
R46		ERJ6GEYJ102	M.RESISTOR CH 1/10W 1K	1	
R47		ERJ6GEYJ470	M.RESISTOR CH 1/10W 47	1	
R48		ERJ6GEYJ332	M.RESISTOR CH 1/10W 3.3K	1	
R79		ERJ6GEYJ332	M.RESISTOR CH 1/10W 3.3K	1	
R128		ERJ6GEYJ221	M.RESISTOR CH 1/10W 220	1	

Ref.No.		Part No.	Part Name & Description	Pcs	Remarks
R149		ERJ6GEYJ333	M.RESISTOR CH 1/10W 33K	1	
R150		ERJ6GEYJ683	M.RESISTOR CH 1/10W 68K	1	
R151		ERJ6GEYG392	M.RESISTOR CH 1/10W 3.9K	1	
R152		ERJ6GEYJ222	M.RESISTOR CH 1/10W 2.2K	1	
R153		ERJ6GEYJ331	M.RESISTOR CH 1/10W 330	1	
R154		ERJ6GEYJ223	M.RESISTOR CH 1/10W 22K	1	
R155		ERJ6GEYJ332	M.RESISTOR CH 1/10W 3.3K	1	
R156		ERJ6GEYJ223	M.RESISTOR CH 1/10W 22K	1	
R157		ERJ6GEYJ222	M.RESISTOR CH 1/10W 2.2K	1	
R158,59		ERJ6GEYJ223	M.RESISTOR CH 1/10W 22K	2	
R161		ERJ6GEYJ331	M.RESISTOR CH 1/10W 330	1	
R162		ERJ6GEYJ221	M.RESISTOR CH 1/10W 220	1	
R173		ERJ6GEYJ221	M.RESISTOR CH 1/10W 220	1	
R175		ERJ6GEYJ222	M.RESISTOR CH 1/10W 2.2K	1	
R176		ERJ6GEYJ101	M.RESISTOR CH 1/10W 100	1	
R178		ERJ6GEYJ391	M.RESISTOR CH 1/10W 390	1	
R179		ERJ6GEY0R00	M.RESISTOR CH 1/10W 0	1	
R181		ERJ6GEYJ152	M.RESISTOR CH 1/10W 1.5K	1	
R182		ERJ6GEYJ473	M.RESISTOR CH 1/10W 47K	1	
R183		ERJ6GEYJ562	M.RESISTOR CH 1/10W 5.6K	1	
R184		ERJ6GEY0R00	M.RESISTOR CH 1/10W 0	1	
R201		ERJ6GEYJ101	M.RESISTOR CH 1/10W 100	1	
R202		ERJ6GEYJ470	M.RESISTOR CH 1/10W 47	1	
R203		ERJ6GEYJ272	M.RESISTOR CH 1/10W 2.7K	1	
R204,05		ERJ6GEYJ103	M.RESISTOR CH 1/10W 10K	2	
R206		ERDS2TJ681	C.RESISTOR 1/4W 680	1	
R207		ERJ6GEYG102	M.RESISTOR CH 1/10W 1K	1	
R208		ERJ6GEYJ472	M.RESISTOR CH 1/10W 4.7K	1	
R209		ERJ6GEYJ103	M.RESISTOR CH 1/10W 10K	1	
R210,11		ERJ6GEYJ472	M.RESISTOR CH 1/10W 4.7K	2	
R212		ERJ6GEYJ182	M.RESISTOR CH 1/10W 1.8K	1	
R213		ERDS2TJ471	C.RESISTOR 1/4W 470	1	
R214,15		ERJ6GEYJ472	M.RESISTOR CH 1/10W 4.7K	2	
R216		ERJ6GEYJ561	M.RESISTOR CH 1/10W 560	1	
R217		ERJ6GEYJ222	M.RESISTOR CH 1/10W 2.2K	1	
R219		ERJ6GEYJ101	M.RESISTOR CH 1/10W 100	1	
R220		ERJ6GEYJ221	M.RESISTOR CH 1/10W 220	1	
R221		ERJ6GEYJ332	M.RESISTOR CH 1/10W 3.3K	1	
R226		ERJ6GEYJ472	M.RESISTOR CH 1/10W 4.7K	1	
R227		ERJ6GEYJ152	M.RESISTOR CH 1/10W 1.5K	1	
R228		ERJ6GEYJ122	M.RESISTOR CH 1/10W 1.2K	1	
R229		ERJ6GEYJ152	M.RESISTOR CH 1/10W 1.5K	1	
R230		ERJ6GEY0R00	M.RESISTOR CH 1/10W 0	1	
R231		ERJ6GEYJ102	M.RESISTOR CH 1/10W 1K	1	
R232		ERJ6GEYJ332	M.RESISTOR CH 1/10W 3.3K	1	
R233		ERDS2TJ562	C.RESISTOR 1/4W 5.6K	1	
R235,36		ERJ6GEYJ152	M.RESISTOR CH 1/10W 1.5K	2	
R237		ERJ6GEYJ331	M.RESISTOR CH 1/10W 330	1	
R238		ERJ6GEYJ332	M.RESISTOR CH 1/10W 3.3K	1	
R239		ERJ6GEYJ102	M.RESISTOR CH 1/10W 1K	1	
R240		ERJ6GEYJ152	M.RESISTOR CH 1/10W 1.5K	1	
R241,42		ERJ6GEYJ102	M.RESISTOR CH 1/10W 1K	2	
R246		ERJ6GEYJ184	M.RESISTOR CH 1/10W 180K	1	
R247		ERJ6GEYJ103	M.RESISTOR CH 1/10W 10K	1	
R248		ERJ6GEYJ472	M.RESISTOR CH 1/10W 4.7K	1	
R249		ERJ6GEYJ122	M.RESISTOR CH 1/10W 1.2K	1	
R250		ERJ6GEYJ331	M.RESISTOR CH 1/10W 330	1	
R251		ERJ6GEYJ472	M.RESISTOR CH 1/10W 4.7K	1	
R252		ERJ6GEYJ222	M.RESISTOR CH 1/10W 2.2K	1	
R253		ERJ6GEYJ102	M.RESISTOR CH 1/10W 1K	1	
R254		ERJ6GEYJ472	M.RESISTOR CH 1/10W 4.7K	1	
R255		ERJ6GEYJ222	M.RESISTOR CH 1/10W 2.2K	1	
R256		ERDS2TJ221	C.RESISTOR 1/4W 220	1	
R257		ERJ6GEYJ221	M.RESISTOR CH 1/10W 220	1	
R258		ERJ6GEYJ101	M.RESISTOR CH 1/10W 100	1	
R259		ERJ6GEYJ391	M.RESISTOR CH 1/10W 390	1	
R260		ERJ6GEYJ151	M.RESISTOR CH 1/10W 150	1	
R261		ERDS2TJ331	C.RESISTOR 1/4W 330	1	
R262		ERJ6GEYJ152	M.RESISTOR CH 1/10W 1.5K	1	
R264		ERJ6GEYJ470	M.RESISTOR CH 1/10W 47	1	
R265		ERJ6GEYJ103	M.RESISTOR CH 1/10W 10K	1	
R266		ERJ6GEYJ101	M.RESISTOR CH 1/10W 100	1	
R267		ERJ6GEYJ472	M.RESISTOR CH 1/10W 4.7K	1	
R295,96		ERJ6GEYJ222	M.RESISTOR CH 1/10W 2.2K	2	
R297		ERJ6GEYJ102	M.RESISTOR CH 1/10W 1K	1	

Refer to the P.C.BOARDS LIST, page 6-1-1, before using this page.

Ref.No.		Part No.	Part Name & Description	Pcs	Remarks
R298		ERJ6GEYJ470	M.RESISTOR CH 1/10W 47	1	
R299,00		ERJ6GEYJ152	M.RESISTOR CH 1/10W 1.5K	2	
R301		ERJ6GEYJ561	M.RESISTOR CH 1/10W 560	1	
R302		ERJ6GEYJ470	M.RESISTOR CH 1/10W 47	1	
R303		ERJ6GEYJ222	M.RESISTOR CH 1/10W 2.2K	1	
R304		ERJ6GEYJ332	M.RESISTOR CH 1/10W 3.3K	1	
R305		ERJ6GEYJ103	M.RESISTOR CH 1/10W 10K	1	
R306,07		ERJ6GEYJ223	M.RESISTOR CH 1/10W 22K	2	
R308		ERJ6GEYJ101	M.RESISTOR CH 1/10W 100	1	
R309		ERJ6GEYJ105	M.RESISTOR CH 1/10W 1M	1	
R310		ERJ6GEYJ472	M.RESISTOR CH 1/10W 4.7K	1	
R311		ERJ6GEYJ103	M.RESISTOR CH 1/10W 10K	1	
R312		ERJ6GEYJ101	M.RESISTOR CH 1/10W 100	1	
R313		ERJ6GEYJ472	M.RESISTOR CH 1/10W 4.7K	1	
R314		ERJ6GEYJ103	M.RESISTOR CH 1/10W 10K	1	
R315,16		ERJ6GEYJ561	M.RESISTOR CH 1/10W 560	2	
R317		ERJ6GEYJ102	M.RESISTOR CH 1/10W 1K	1	
R318		ERJ6GEYJ470	M.RESISTOR CH 1/10W 47	1	
R319		ERJ6GEYJ152	M.RESISTOR CH 1/10W 1.5K	1	
R320		ERJ6GEYJ561	M.RESISTOR CH 1/10W 560	1	
R321		ERJ6GEYJ152	M.RESISTOR CH 1/10W 1.5K	1	
R322		ERJ6GEYJ470	M.RESISTOR CH 1/10W 47	1	
R323		ERJ6GEYJ222	M.RESISTOR CH 1/10W 2.2K	1	
R324		ERJ6GEYJ332	M.RESISTOR CH 1/10W 3.3K	1	
R325		ERJ6GEYJ103	M.RESISTOR CH 1/10W 10K	1	
R326,27		ERJ6GEYJ223	M.RESISTOR CH 1/10W 22K	2	
R328		ERJ6GEYJ101	M.RESISTOR CH 1/10W 100	1	
R330		ERJ6GEYJ105	M.RESISTOR CH 1/10W 1M	1	
R331		ERJ6GEYJ472	M.RESISTOR CH 1/10W 4.7K	1	
R332		ERJ6GEYJ103	M.RESISTOR CH 1/10W 10K	1	
R333		ERJ6GEYJ101	M.RESISTOR CH 1/10W 100	1	
R334		ERJ6GEYJ472	M.RESISTOR CH 1/10W 4.7K	1	
R335		ERJ6GEYJ101	M.RESISTOR CH 1/10W 100	1	
R336		ERJ6GEYJ272	M.RESISTOR CH 1/10W 2.7K	1	
R337		ERJ6GEYJ183	M.RESISTOR CH 1/10W 18K	1	
R338,39		ERJ6GEYJ101	M.RESISTOR CH 1/10W 100	2	
R340		ERJ6GEYJ472	M.RESISTOR CH 1/10W 4.7K	1	
R341		ERJ6GEYJ332	M.RESISTOR CH 1/10W 3.3K	1	
R342-44		ERJ6GEYJ103	M.RESISTOR CH 1/10W 10K	3	
R345		ERJ6GEYJ472	M.RESISTOR CH 1/10W 4.7K	1	
R346		ERJ6GEYJ103	M.RESISTOR CH 1/10W 10K	1	
R347		ERJ6GEYJ334	M.RESISTOR CH 1/10W 330K	1	
R348		ERJ6GEYJ472	M.RESISTOR CH 1/10W 4.7K	1	
R349,50		ERJ6GEYJ103	M.RESISTOR CH 1/10W 10K	2	
R351		ERJ6GEYJ563	M.RESISTOR CH 1/10W 56K	1	
R353		ERJ6GEYJ561	M.RESISTOR CH 1/10W 560	1	
R354		ERJ6GEYJ102	M.RESISTOR CH 1/10W 1K	1	
R362		ERJ6GEYJ472	M.RESISTOR CH 1/10W 4.7K	1	
R363		ERJ6GEYJ101	M.RESISTOR CH 1/10W 100	1	
R364		ERJ6GEYJ472	M.RESISTOR CH 1/10W 4.7K	1	
R365		ERJ6GEYJ334	M.RESISTOR CH 1/10W 330K	1	
R366		ERJ6GEYJ102	M.RESISTOR CH 1/10W 1K	1	
R367		ERJ6GEYJ153	M.RESISTOR CH 1/10W 15K	1	
R374		ERJ6GEYJ562	M.RESISTOR CH 1/10W 5.6K	1	
R401		ERJ6GEYJ333	M.RESISTOR CH 1/10W 33K	1	
R402		ERJ6GEYJ153	M.RESISTOR CH 1/10W 15K	1	
R403		ERJ6GEYJ102	M.RESISTOR CH 1/10W 1K	1	
R404		ERJ6GEYJ393	M.RESISTOR CH 1/10W 39K	1	
R405,06		ERJ6GEYJ103	M.RESISTOR CH 1/10W 10K	2	
R409		ERJ6GEY0R00	M.RESISTOR CH 1/10W 0	1	
R411		ERJ6GEY0R00	M.RESISTOR CH 1/10W 0	1	
R412,13		ERJ6GEYJ222	M.RESISTOR CH 1/10W 2.2K	2	
R414		ERJ6GEY0R00	M.RESISTOR CH 1/10W 0	1	
R416		ERJ6GEYJ222	M.RESISTOR CH 1/10W 2.2K	1	
R501		ERJ6GEYJ152	M.RESISTOR CH 1/10W 1.5K	1	
R502		ERJ6GEYJ271	M.RESISTOR CH 1/10W 270	1	
R503		ERJ6GEYJ102	M.RESISTOR CH 1/10W 1K	1	
R504		ERJ6GEYJ271	M.RESISTOR CH 1/10W 270	1	
R505		ERJ6GEYJ102	M.RESISTOR CH 1/10W 1K	1	
R506		ERJ6GEYJ332	M.RESISTOR CH 1/10W 3.3K	1	
R508		ERJ6GEY0R00	M.RESISTOR CH 1/10W 0	1	
R509		ERJ6GEYJ820	M.RESISTOR CH 1/10W 82	1	
R510		ERJ6GEYG301	M.RESISTOR CH 1/10W 300	1	
R511		ERJ6GEYJ470	M.RESISTOR CH 1/10W 47	1	
R512		ERJ6GEYJ272	M.RESISTOR CH 1/10W 2.7K	1	
R513		ERJ6GEYJ472	M.RESISTOR CH 1/10W 4.7K	1	
R514		ERJ6GEYJ470	M.RESISTOR CH 1/10W 47	1	
R515		ERJ6GEYJ153	M.RESISTOR CH 1/10W 15K	1	
R516		ERJ6GEYJ681	M.RESISTOR CH 1/10W 680	1	
R517		ERJ6GEYJ332	M.RESISTOR CH 1/10W 3.3K	1	
R518		ERJ6GEYJ103	M.RESISTOR CH 1/10W 10K	1	
R519		ERJ6GEYJ154	M.RESISTOR CH 1/10W 150K	1	
R520		ERJ6GEYJ332	M.RESISTOR CH 1/10W 3.3K	1	
R521		ERJ6GEYJ331	M.RESISTOR CH 1/10W 330	1	
R522		ERJ6GEYJ105	M.RESISTOR CH 1/10W 1M	1	
R523		ERJ6GEYJ103	M.RESISTOR CH 1/10W 10K	1	
R524		ERJ6GEYJ472	M.RESISTOR CH 1/10W 4.7K	1	
R525		ERJ6GEYJ103	M.RESISTOR CH 1/10W 10K	1	
R526		ERJ6GEYJ152	M.RESISTOR CH 1/10W 1.5K	1	
R527		ERJ6GEYJ271	M.RESISTOR CH 1/10W 270	1	
R528		ERJ6GEYJ102	M.RESISTOR CH 1/10W 1K	1	
R529		ERJ6GEYJ332	M.RESISTOR CH 1/10W 3.3K	1	
R530		ERJ6GEYJ473	M.RESISTOR CH 1/10W 47K	1	
R531		ERJ6GEYJ820	M.RESISTOR CH 1/10W 82	1	
R532		ERJ6GEYG301	M.RESISTOR CH 1/10W 300	1	
R533,34		ERJ6GEYJ470	M.RESISTOR CH 1/10W 47	2	
R535		ERJ6GEYJ472	M.RESISTOR CH 1/10W 4.7K	1	
R536		ERJ6GEYJ153	M.RESISTOR CH 1/10W 15K	1	
R537		ERJ6GEYJ272	M.RESISTOR CH 1/10W 2.7K	1	
R538		ERJ6GEYJ681	M.RESISTOR CH 1/10W 680	1	
R539		ERJ6GEYJ332	M.RESISTOR CH 1/10W 3.3K	1	
R540		ERJ6GEYJ103	M.RESISTOR CH 1/10W 10K	1	
R541		ERJ6GEYJ154	M.RESISTOR CH 1/10W 150K	1	
R542		ERJ6GEYJ332	M.RESISTOR CH 1/10W 3.3K	1	
R543		ERJ6GEYJ331	M.RESISTOR CH 1/10W 330	1	
R544		ERJ6GEYJ103	M.RESISTOR CH 1/10W 10K	1	
R545		ERJ6GEYJ105	M.RESISTOR CH 1/10W 1M	1	
R546		ERJ6GEYJ472	M.RESISTOR CH 1/10W 4.7K	1	
R547		ERJ6GEYJ103	M.RESISTOR CH 1/10W 10K	1	
R548		ERJ6GEYJ102	M.RESISTOR CH 1/10W 1K	1	
R549		ERJ6GEYJ473	M.RESISTOR CH 1/10W 47K	1	
R550		ERJ6GEYJ393	M.RESISTOR CH 1/10W 39K	1	
R552-54		ERJ6GEYJ222	M.RESISTOR CH 1/10W 2.2K	3	
R555		ERJ6GEYJ332	M.RESISTOR CH 1/10W 3.3K	1	
R556		ERJ6GEYJ222	M.RESISTOR CH 1/10W 2.2K	1	
R557		ERJ6GEYJ182	M.RESISTOR CH 1/10W 1.8K	1	
R558		ERJ6GEYJ222	M.RESISTOR CH 1/10W 2.2K	1	
R562,63		ERJ6GEYJ222	M.RESISTOR CH 1/10W 2.2K	2	
R564		ERJ6GEYJ332	M.RESISTOR CH 1/10W 3.3K	1	
R565		ERJ6GEYJ222	M.RESISTOR CH 1/10W 2.2K	1	
R566		ERJ6GEYJ470	M.RESISTOR CH 1/10W 47	1	
R567		ERJ6GEYJ222	M.RESISTOR CH 1/10W 2.2K	1	
R569		ERJ6GEYJ222	M.RESISTOR CH 1/10W 2.2K	1	
R571		ERJ6GEYJ102	M.RESISTOR CH 1/10W 1K	1	
R572		ERJ6GEYJ181	M.RESISTOR CH 1/10W 180	1	
R573		ERJ6GEYJ750	M.RESISTOR CH 1/10W 75	1	
R574		ERJ6GEYJ102	M.RESISTOR CH 1/10W 1K	1	
R575		ERJ6GEYJ470	M.RESISTOR CH 1/10W 47	1	
R576		ERJ6GEYJ224	M.RESISTOR CH 1/10W 220K	1	
R577		ERJ6GEYJ684	M.RESISTOR CH 1/10W 680K	1	
R578		ERJ6GEYJ103	M.RESISTOR CH 1/10W 10K	1	
R579		ERJ6GEYJ222	M.RESISTOR CH 1/10W 2.2K	1	
R580		ERJ6GEYJ102	M.RESISTOR CH 1/10W 1K	1	
R581		ERJ6GEYJ222	M.RESISTOR CH 1/10W 2.2K	1	
R582-84		ERJ6GEYJ103	M.RESISTOR CH 1/10W 10K	3	
R585,86		ERJ6GEYJ470	M.RESISTOR CH 1/10W 47	2	
R587,88		ERJ6GEYJ104	M.RESISTOR CH 1/10W 100K	2	
R589		ERJ6GEYJ221	M.RESISTOR CH 1/10W 220	1	
R601,02		ERJ6GEYJ222	M.RESISTOR CH 1/10W 2.2K	2	
R603-10		ERJ6GEYJ152	M.RESISTOR CH 1/10W 1.5K	8	
R613		VRE0034E361	M.RESISTOR CH 1/10W 360	1	
R614,15		VRE0034E102	M.RESISTOR CH 1/10W 1K	2	
R616		VRE0034E272	M.RESISTOR CH 1/10W 2.7K	1	
R617		VRE0034E202	M.RESISTOR CH 1/10W 2K	1	
R618		VRE0034E152	M.RESISTOR CH 1/10W 1.5K	1	
R620		ERJ6GEYJ102	M.RESISTOR CH 1/10W 1K	1	
R621		ERJ6GEYJ103	M.RESISTOR CH 1/10W 10K	1	
R622		ERJ6GEYJ152	M.RESISTOR CH 1/10W 1.5K	1	
R623,24		ERJ6GEYG301	M.RESISTOR CH 1/10W 300	2	
R625		ERJ6GEYJ222	M.RESISTOR CH 1/10W 2.2K	1	

Refer to the P.C.BOARDS LIST, page 6-1-1, before using this page.

Ref.No.		Part No.	Part Name & Description	Pcs	Remarks
R626,27		ERJ6GEYJ681	M.RESISTOR CH 1/10W 680	2	
R628		ERJ6GEYJ472	M.RESISTOR CH 1/10W 4.7K	1	
R630		ERJ6GEYJ222	M.RESISTOR CH 1/10W 2.2K	1	
R631		ERJ6GEYJ470	M.RESISTOR CH 1/10W 47	1	
R632		ERJ6GEYJ472	M.RESISTOR CH 1/10W 4.7K	1	
R633		ERJ6GEYJ272	M.RESISTOR CH 1/10W 2.7K	1	
R634		ERJ6GEYJ822	M.RESISTOR CH 1/10W 8.2K	1	
R635		ERJ6GEYJ222	M.RESISTOR CH 1/10W 2.2K	1	
R636		ERJ6GEYJ561	M.RESISTOR CH 1/10W 560	1	
R638		ERJ6GEYJ332	M.RESISTOR CH 1/10W 3.3K	1	
R640		ERJ6GEYJ101	M.RESISTOR CH 1/10W 100	1	
R641		ERJ6GEYJ102	M.RESISTOR CH 1/10W 1K	1	
R643		ERJ6GEYJ103	M.RESISTOR CH 1/10W 10K	1	
R644		ERJ6GEYJ101	M.RESISTOR CH 1/10W 100	1	
R645		ERJ6GEYJ103	M.RESISTOR CH 1/10W 10K	1	
R646		ERJ6GEYJ101	M.RESISTOR CH 1/10W 100	1	
R647		ERJ6GEYJ222	M.RESISTOR CH 1/10W 2.2K	1	
R648		ERJ6GEYJ330	M.RESISTOR CH 1/10W 33	1	
R656		ERJ6GEYJ471	M.RESISTOR CH 1/10W 470	1	
R701		ERJ6GEYJ103	M.RESISTOR CH 1/10W 10K	1	
R702		ERJ6GEYJ682	M.RESISTOR CH 1/10W 6.8K	1	
R703		ERJ6GEYJ222	M.RESISTOR CH 1/10W 2.2K	1	
R704		ERJ6GEYJ683	M.RESISTOR CH 1/10W 68K	1	
R705		ERJ6GEYJ332	M.RESISTOR CH 1/10W 3.3K	1	
R706,07		ERJ6GEYJ562	M.RESISTOR CH 1/10W 5.6K	2	
R708,09		ERJ6GEYJ332	M.RESISTOR CH 1/10W 3.3K	2	
R710		ERJ6GEYJ392	M.RESISTOR CH 1/10W 3.9K	1	
R711		ERJ6GEYJ103	M.RESISTOR CH 1/10W 10K	1	
R712		ERJ6GEYJ472	M.RESISTOR CH 1/10W 4.7K	1	
R713		ERJ6GEYJ152	M.RESISTOR CH 1/10W 1.5K	1	
R714		ERJ6GEYJ472	M.RESISTOR CH 1/10W 4.7K	1	
R715		ERJ6GEYJ103	M.RESISTOR CH 1/10W 10K	1	
R716		ERJ6GEYJ153	M.RESISTOR CH 1/10W 15K	1	
R717,18		ERJ6GEYJ104	M.RESISTOR CH 1/10W 100K	2	
R719		ERJ6GEYJ123	M.RESISTOR CH 1/10W 12K	1	
R720		ERJ6GEYJ223	M.RESISTOR CH 1/10W 22K	1	
R721,22		ERJ6GEYJ103	M.RESISTOR CH 1/10W 10K	2	
R723		ERJ6GEYJ473	M.RESISTOR CH 1/10W 47K	1	
R724		ERJ6GEYJ104	M.RESISTOR CH 1/10W 100K	1	
R725		ERJ6GEYJ222	M.RESISTOR CH 1/10W 2.2K	1	
R726		ERJ6GEYJ472	M.RESISTOR CH 1/10W 4.7K	1	
R727		ERJ6GEYJ103	M.RESISTOR CH 1/10W 10K	1	
R728		ERJ6GEYJ102	M.RESISTOR CH 1/10W 1K	1	
R729		ERJ6GEYJ473	M.RESISTOR CH 1/10W 47K	1	
R731		ERJ6GEYJ393	M.RESISTOR CH 1/10W 39K	1	
R732		ERJ6GEYJ223	M.RESISTOR CH 1/10W 22K	1	
R733		ERJ6GEYJ152	M.RESISTOR CH 1/10W 1.5K	1	
R734		ERJ6GEYJ102	M.RESISTOR CH 1/10W 1K	1	
R735,36		ERJ6GEYJ104	M.RESISTOR CH 1/10W 100K	2	
R737		ERJ6GEYJ152	M.RESISTOR CH 1/10W 1.5K	1	
R738,39		ERJ6GEYJ103	M.RESISTOR CH 1/10W 10K	2	
R743,44		ERJ6GEY0R00	M.RESISTOR CH 1/10W 0	2	
R746,47		ERJ6GEY0R00	M.RESISTOR CH 1/10W 0	2	
R748		ERJ6GEYJ103	M.RESISTOR CH 1/10W 10K	1	
R751		ERJ6GEYJ472	M.RESISTOR CH 1/10W 4.7K	1	
R752		ERJ6GEYJ152	M.RESISTOR CH 1/10W 1.5K	1	
R753,54		ERJ6GEYJ332	M.RESISTOR CH 1/10W 3.3K	2	
R755,56		ERJ6GEYJ222	M.RESISTOR CH 1/10W 2.2K	2	
R761		ERJ6GEYJ103	M.RESISTOR CH 1/10W 10K	1	
R762		ERJ6GEYJ822	M.RESISTOR CH 1/10W 8.2K	1	
R763,64		ERJ6GEYJ102	M.RESISTOR CH 1/10W 1K	2	
R765		ERJ6GEYJ332	M.RESISTOR CH 1/10W 3.3K	1	
R766		ERJ6GEYJ470	M.RESISTOR CH 1/10W 47	1	
R769-71		ERJ6GEYJ682	M.RESISTOR CH 1/10W 6.8K	3	
SW201		VSS0126	SWITCH	1	
SW701		VSS0126	SWITCH	1	
TP3		VJR0646	TEST POINT	1	
TP201-06		VJR0646	TEST POINT	6	
TP401-05		VJR0646	TEST POINT	5	

Ref.No.		Part No.	Part Name & Description	Pcs	Remarks
TP501,02		VJR0646	TEST POINT	2	
TP504		VJR0646	TEST POINT	1	
TP601		VJR0646	TEST POINT	1	
TP701-04		VJR0646	TEST POINT	4	
TPG201		VJR0646	TEST POINT	1	
TPG501,02		VJR0646	TEST POINT	2	
VC201		ECV1ZW50X53T	V.CAPACITOR 50P	1	
VC401		ECV1ZW10X53T	V.CAPACITOR 10P	1	
VL701		VLQ0415	COIL	1	
VR1		VRV0109B501	V.RESISTOR 500	1	
VR11		VRV0109B102	V.RESISTOR 1K	1	
VR201-03		VRV0109B501	V.RESISTOR 500	3	
VR204,05		VRV0109B202	V.RESISTOR 2K	2	
VR206,07		VRV0109B102	V.RESISTOR 1K	2	
VR212		VRV0109B102	V.RESISTOR 1K	1	
VR213		VRV0109B202	V.RESISTOR 2K	1	
VR214		VRV0109B102	V.RESISTOR 1K	1	
VR215		VRV0109B202	V.RESISTOR 2K	1	
VR216,17		VRV0109B203	V.RESISTOR 20K	2	
VR218		VRV0064B502	V.RESISTOR 5K	1	
VR401		VRV0109B102	V.RESISTOR 1K	1	
VR403		VRV0109B103	V.RESISTOR 10K	1	
VR501,02		VRV0109B202	V.RESISTOR 2K	2	
VR503,04		VRV0109B102	V.RESISTOR 1K	2	
VR505		VRV0109B202	V.RESISTOR 2K	1	
VR601,02		VRV0064B201	V.RESISTOR 200	2	
VR603,04		VRV0109B102	V.RESISTOR 1K	2	
VR701		VRV0109B202	V.RESISTOR 2K	1	
VR702-04		VRV0109B502	V.RESISTOR 5K	3	
X201		VSX0270	CRYSTAL OSCILLATOR	1	
X701		VSX0149	CRYSTAL OSCILLATOR	1	
			MISCELLANEOUS		
		VML2143	CARD PULLER	1	
		VML2144	CARD PULLER	1	
		VMS4174	PIN	6	
		VMZ1547	BARRIER	1	
		VSC1871	SHIELD CASE	1	
		VSC1872	SHIELD CASE	1	
		VSC3056	SHIELD CASE	1	
		VXA3966	P.C.B. SHIELD PLATE	1	
		XNG26E	NUT	4	
		XYNV3+K6FR	SCREW	6	
		XYN26+C12	SCREW	4	

Refer to the P.C.BOARDS LIST, page 6-1-1, before using this page.

Ref.No.		Part No.	Part Name & Description	Pcs	Remarks
	■	VEP82061A	P.C.BOARD W/COMPONENT		FOR AU-65-P
			W5 SERVO		
			CAPACITORS		
C1		ECQM1H273JF	P.CAPACITOR 50V 0.027U	1	
C2		ECUM1H152JN	C.CAPACITOR CH 50V 1500P	1	
C3,C4		ECUM1H101JCN	C.CAPACITOR CH 50V 100P	2	
C5		ECEA1CU100	E.CAPACITOR 16V 10U	1	
C6		ECEA0JU101	E.CAPACITOR 6.3V 100U	1	
C7		ECEA1AU470	E.CAPACITOR 10V 47U	1	
C8		ECUM1H103ZFN	C.CAPACITOR CH 50V 0.01U	1	
C9		ECQM1H154JF	P.CAPACITOR 50V 0.15U	1	
C10		ECEA1HN2R2S	E.CAPACITOR 50V 2.2U	1	
C11		ECQM1H223JF	P.CAPACITOR 50V 0.022U	1	
C13		ECQP1H822JZ	P.CAPACITOR 50V 8200P	1	
C14		ECQM1H682JV	P.CAPACITOR 50V 6800P	1	
C15,16		ECUM1H103ZFN	C.CAPACITOR CH 50V 0.01U	2	
C17		ECQM1H394JV	P.CAPACITOR 50V 0.39U	1	
C18		ECEA1HU4R7	E.CAPACITOR 50V 4.7U	1	
C19		ECEA1AU470	E.CAPACITOR 10V 47U	1	
C20,21		ECUM1H103ZFN	C.CAPACITOR CH 50V 0.01U	2	
C22		ECEA1HU2R2	E.CAPACITOR 50V 2.2U	1	
C23,24		ECUM1E104ZFN	C.CAPACITOR CH 25V 0.1U	2	
C25		ECUM1H103ZFN	C.CAPACITOR CH 50V 0.01U	1	
C26		ECEA1AU470	E.CAPACITOR 10V 47U	1	
C27		ECUM1H103ZFN	C.CAPACITOR CH 50V 0.01U	1	
C28		ECEA1AU470	E.CAPACITOR 10V 47U	1	
C29		ECEA1AU330	E.CAPACITOR 10V 33U	1	
C30		ECUM1H103ZFN	C.CAPACITOR CH 50V 0.01U	1	
C31		ECEA1AU330	E.CAPACITOR 10V 33U	1	
C32		ECEA1AU470	E.CAPACITOR 10V 47U	1	
C33		ECUM1H103ZFN	C.CAPACITOR CH 50V 0.01U	1	
C34		ECEA1AU470	E.CAPACITOR 10V 47U	1	
C39		ECUM1H331JCN	C.CAPACITOR CH 50V 330P	1	
C40-42		ECUM1H103ZFN	C.CAPACITOR CH 50V 0.01U	3	
C43		ECUM1H101JCN	C.CAPACITOR CH 50V 100P	1	
C46		ECEA1CU470	E.CAPACITOR 16V 47U	1	
C47,48		ECUM1E104ZFN	C.CAPACITOR CH 25V 0.1U	2	
C101		ECQM1H104JF	P.CAPACITOR 50V 0.1U	1	
C102		ECUM1H151JCN	C.CAPACITOR CH 50V 150P	1	
C103		ECEA1CU470	E.CAPACITOR 16V 47U	1	
C104		ECEA1HU2R2	E.CAPACITOR 50V 2.2U	1	
C105		ECEA1CU101	E.CAPACITOR 16V 100U	1	
C106		ECQM1H104JF	P.CAPACITOR 50V 0.1U	1	
C107		ECUM1H151JCN	C.CAPACITOR CH 50V 150P	1	
C108		ECUM1H102JCN	C.CAPACITOR CH 50V 1000P	1	
C109		ECUM1H221JCN	C.CAPACITOR CH 50V 220P	1	
C110		ECQM1H103JF	P.CAPACITOR 50V 0.01U	1	
C111		ECEA1HU010	E.CAPACITOR 50V 1U	1	
C112		ECQM1H154JF	P.CAPACITOR 50V 0.15U	1	
C113		ECEA1HU010	E.CAPACITOR 50V 1U	1	
C114		ECEA1CU470	E.CAPACITOR 16V 47U	1	
C115		ECUM1H103ZFN	C.CAPACITOR CH 50V 0.01U	1	
C116		ECEA1CU470	E.CAPACITOR 16V 47U	1	
C117		ECUM1H103ZFN	C.CAPACITOR CH 50V 0.01U	1	
C118		ECEA1CU470	E.CAPACITOR 16V 47U	1	
C119		ECUM1H103ZFN	C.CAPACITOR CH 50V 0.01U	1	
C120		ECEA1CU470	E.CAPACITOR 16V 47U	1	
C121		ECUM1H103ZFN	C.CAPACITOR CH 50V 0.01U	1	
C122		ECEA1CU470	E.CAPACITOR 16V 47U	1	
C123		ECUM1H330JCN	C.CAPACITOR CH 50V 33P	1	
C124		ECUM1H103ZFN	C.CAPACITOR CH 50V 0.01U	1	
C125		ECEA1CU470	E.CAPACITOR 16V 47U	1	
C126		ECQM1H562JF	P.CAPACITOR 50V 5600P	1	
C127		ECQM1H393JF	P.CAPACITOR 50V 0.039U	1	
C128		ECQM1H104JF	P.CAPACITOR 50V 0.1U	1	
C129		ECEA1OM22	E.CAPACITOR 10V 22U	1	
C130		ECEA1HU010	E.CAPACITOR 50V 1U	1	

Ref.No.		Part No.	Part Name & Description	Pcs	Remarks
C131		ECEA1EN220S	E.CAPACITOR 25V 22U	1	
C132		ECQM1H103JF	P.CAPACITOR 50V 0.01U	1	
C133-36		ECUM1H103ZFN	C.CAPACITOR CH 50V 0.01U	4	
C137		ECEA1CU101	E.CAPACITOR 16V 100U	1	
C138		ECEA1CU470	E.CAPACITOR 16V 47U	1	
C139		ECQM1H822JF	P.CAPACITOR 50V 8200P	1	
C140		ECUM1H102JCN	C.CAPACITOR CH 50V 1000P	1	
C141		ECEA1HN010S	E.CAPACITOR 50V 1U	1	
C142		ECEA1CU101	E.CAPACITOR 16V 100U	1	
C143		ECEA1CU470	E.CAPACITOR 16V 47U	1	
C144		ECEA1CU220	E.CAPACITOR 16V 22U	1	
C145		ECEA1AU470	E.CAPACITOR 10V 47U	1	
C146		ECUM1H103ZFN	C.CAPACITOR CH 50V 0.01U	1	
C147		ECEA1HUR47	E.CAPACITOR 50V 0.47U	1	
C148		ECEA1CU470	E.CAPACITOR 16V 47U	1	
C149,50		ECUM1H103ZFN	C.CAPACITOR CH 50V 0.01U	2	
C151		ECEA1HN010S	E.CAPACITOR 50V 1U	1	
C152,53		ECUM1H103ZFN	C.CAPACITOR CH 50V 0.01U	2	
C154		ECUM1H152KBN	C.CAPACITOR CH 50V 1500P	1	
C155		ECEA1HN100S	E.CAPACITOR 50V 10U	1	
C156		ECEA1HUR47	E.CAPACITOR 50V 0.47U	1	
C157,58		ECUM1H103ZFN	C.CAPACITOR CH 50V 0.01U	2	
C159		ECQM1H104JF	P.CAPACITOR 50V 0.1U	1	
C160		ECUM1H103ZFN	C.CAPACITOR CH 50V 0.01U	1	
C161		ECQM1H104JF	P.CAPACITOR 50V 0.1U	1	
C162,63		ECQM1H103JF	P.CAPACITOR 50V 0.01U	2	
C164		ECEA1HU4R7	E.CAPACITOR 50V 4.7U	1	
C165-67		ECUM1H103ZFN	C.CAPACITOR CH 50V 0.01U	3	
C168		ECEA1EU100	E.CAPACITOR 25V 10U	1	
C169		ECQM1H103JF	P.CAPACITOR 50V 0.01U	1	
C170		ECUM1H471JCN	C.CAPACITOR CH 50V 470P	1	
C171,72		ECUM1H103ZFN	C.CAPACITOR CH 50V 0.01U	2	
C173		ECUM1H101JCN	C.CAPACITOR CH 50V 100P	1	
C174		ECUM1H103ZFN	C.CAPACITOR CH 50V 0.01U	1	
C175		ECEA1HU2R2	E.CAPACITOR 50V 2.2U	1	
C176		ECEA1CU470	E.CAPACITOR 16V 47U	1	
C177		ECQM1H222JF	P.CAPACITOR 50V 2200P	1	
C179		ECUM1H221JCN	C.CAPACITOR CH 50V 220P	1	
C301		ECEA1AU330	E.CAPACITOR 10V 33U	1	
C302		ECUM1H103ZFN	C.CAPACITOR CH 50V 0.01U	1	
C303		ECQM1H562JF	P.CAPACITOR 50V 5600P	1	
C304		ECQM1H392JF	P.CAPACITOR 50V 3900P	1	
C305		ECUM1H103ZFN	C.CAPACITOR CH 50V 0.01U	1	
C306		ECQM1H123JF	P.CAPACITOR 50V 0.012U	1	
C307		ECEA1CN470S	E.CAPACITOR 16V 47U	1	
C308		ECEA0JU221	E.CAPACITOR 6.3V 220U	1	
C309		ECEA1HU2R2	E.CAPACITOR 50V 2.2U	1	
C310		ECQM1H104JF	P.CAPACITOR 50V 0.1U	1	
C311		ECUM1H153KBN	C.CAPACITOR CH 50V 0.015U	1	
C312		ECEA1HN010S	E.CAPACITOR 50V 1U	1	
C313,14		ECUM1H103ZFN	C.CAPACITOR CH 50V 0.01U	2	
C315		ECQM1H104JF	P.CAPACITOR 50V 0.1U	1	
C316		ECUM1E273KBN	C.CAPACITOR CH 25V 0.027U	1	
C317		ECEA1HN2R2S	E.CAPACITOR 50V 2.2U	1	
C318-20		ECUM1H103ZFN	C.CAPACITOR CH 50V 0.01U	3	
C321		ECEA1CU100	E.CAPACITOR 16V 10U	1	
C322		ECEA0JU470	E.CAPACITOR 6.3V 47U	1	
C323		ECUM1H103ZFN	C.CAPACITOR CH 50V 0.01U	1	
C324		ECEA0JU102	E.CAPACITOR 6.3V 1000U	1	
C327		ECEA1HU2R2	E.CAPACITOR 50V 2.2U	1	
C330-36		ECUM1H103ZFN	C.CAPACITOR CH 50V 0.01U	7	
C338,39		ECEA1CU100	E.CAPACITOR 16V 10U	2	
C342		ECQM1H104JF	P.CAPACITOR 50V 0.1U	1	
C401-03		ECUM1H103ZFN	C.CAPACITOR CH 50V 0.01U	3	
C406		ECUM1H103ZFN	C.CAPACITOR CH 50V 0.01U	1	
C408-10		ECUM1H103ZFN	C.CAPACITOR CH 50V 0.01U	3	
C454		ECUM1H103ZFN	C.CAPACITOR CH 50V 0.01U	1	
C492		ECUM1H103ZFN	C.CAPACITOR CH 50V 0.01U	1	
C495,96		ECUM1H103ZFN	C.CAPACITOR CH 50V 0.01U	2	
C501		ECUM1H103ZFN	C.CAPACITOR CH 50V 0.01U	1	
C502		ECEA1CU470	E.CAPACITOR 16V 47U	1	
C503		ECEA1ESS471	E.CAPACITOR 25V 470U	1	
C504		ECUM1E473KBN	C.CAPACITOR CH 25V 0.047U	1	
C505		ECUM1H561JCN	C.CAPACITOR CH 50V 560P	1	
C506		ECUM1H820JCN	C.CAPACITOR CH 50V 82P	1	

Refer to the P.C.BOARDS LIST, page 6-1-1, before using this page.

Ref.No.		Part No.	Part Name & Description	Pcs	Remarks
C507		ECUM1H561JCN	C.CAPACITOR CH 50V 560P	1	
C508		ECEA1HU010	E.CAPACITOR 50V 1U	1	
C509-13		ECEA1ESS101	E.CAPACITOR 25V 100U	5	
C514		ECQM1H104JF	P.CAPACITOR 50V 0.1U	1	
C515		ECEA1EU4R7	E.CAPACITOR 25V 4.7U	1	
C516-18		ECEA1HN4R7S	E.CAPACITOR 50V 4.7U	3	
C519		ECEA1HU010	E.CAPACITOR 50V 1U	1	
C520-22		ECUM1H103KBN	C.CAPACITOR CH 50V 0.01U	3	
C523		ECQM1H104JF	P.CAPACITOR 50V 0.1U	1	
C524		ECEA1EU4R7	E.CAPACITOR 25V 4.7U	1	
C525,26		ECEA1HN4R7S	E.CAPACITOR 50V 4.7U	2	
C527		ECQM1H104JF	P.CAPACITOR 50V 0.1U	1	
C528		ECEA1HU010	E.CAPACITOR 50V 1U	1	
C529-31		ECUM1H103KBN	C.CAPACITOR CH 50V 0.01U	3	
C532		ECEA1EU4R7	E.CAPACITOR 25V 4.7U	1	
C533,34		ECEA1HN4R7S	E.CAPACITOR 50V 4.7U	2	
C535		ECQM1H104JF	P.CAPACITOR 50V 0.1U	1	
C536		ECEA1HU010	E.CAPACITOR 50V 1U	1	
C537-39		ECUM1H103KBN	C.CAPACITOR CH 50V 0.01U	3	
C540		ECEA1EU4R7	E.CAPACITOR 25V 4.7U	1	
C541-43		ECEA1HN4R7S	E.CAPACITOR 50V 4.7U	3	
C544		ECQM1H104JF	P.CAPACITOR 50V 0.1U	1	
C545		ECEA1HU010	E.CAPACITOR 50V 1U	1	
C546-48		ECUM1H103KBN	C.CAPACITOR CH 50V 0.01U	3	
C549		ECEA1AU470	E.CAPACITOR 10V 47U	1	
C550		ECUM1E473KBN	C.CAPACITOR CH 25V 0.047U	1	
C551		ECEA1HN4R7S	E.CAPACITOR 50V 4.7U	1	
C552		ECQM1H104JF	P.CAPACITOR 50V 0.1U	1	
C553		ECEA1HN4R7S	E.CAPACITOR 50V 4.7U	1	
C558-63		ECQM1H104JF	P.CAPACITOR 50V 0.1U	6	
C902-06		ECUM1H103ZFN	C.CAPACITOR CH 50V 0.01U	5	
C909		ECUM1H103ZFN	C.CAPACITOR CH 50V 0.01U	1	
D1		MA151K	DIODE	1	
D4		MA151K	DIODE	1	
D101		MA151K	DIODE	1	
D102		MA153	DIODE	1	
D103		MA151WK	DIODE	1	
D104		MA151K	DIODE	1	
D105		MA151WK	DIODE	1	
D106,07		MA151WA	DIODE	2	
D108		MA151K	DIODE	1	
D109		MA151WK	DIODE	1	
D110,11		MA153	DIODE	2	
D112		MA151WK	DIODE	1	
D113,14		MA151K	DIODE	2	
D115		MA153	DIODE	1	
D116		MA151K	DIODE	1	
D119		MA151WK	DIODE	1	
D120-22		MA151WA	DIODE	3	
D123		MA151K	DIODE	1	
D125		MA151K	DIODE	1	
D126,27		MA153	DIODE	2	
D128		MA151WA	DIODE	1	
D129		MA151K	DIODE	1	
D301,02		MA151K	DIODE	2	
D303		MA151WK	DIODE	1	
D304		MA151WA	DIODE	1	
D305		MA151K	DIODE	1	
D307		MA151WA	DIODE	1	
D309		MA151WK	DIODE	1	
D310		MA151K	DIODE	1	
D313		MA151WA	DIODE	1	
D314-17		MA151WK	DIODE	4	
D318		MA151K	DIODE	1	
D319,20		MA151WK	DIODE	2	
D321,22		MA151K	DIODE	2	
D323,24		MA151WK	DIODE	2	
D325		MA151K	DIODE	1	
D330		MA151K	DIODE	1	
D333		MA151WK	DIODE	1	
D334-38		MA151K	DIODE	5	
D340		MA151WA	DIODE	1	

Ref.No.		Part No.	Part Name & Description	Pcs	Remarks
D341		MA151K	DIODE	1	
D345,46		MA151WA	DIODE	2	
D349		MA151WK	DIODE	1	
D351		MA151K	DIODE	1	
D501		MA151K	DIODE	1	
D502		MA151WK	DIODE	1	
D503		MA153	DIODE	1	
D504		MA151WK	DIODE	1	
D505,06		MA151K	DIODE	2	
D507		MA151WK	DIODE	1	
D508,09		MA151K	DIODE	2	
D510		MA151WK	DIODE	1	
D511		MA151K	DIODE	1	
D514-17		MA701A	DIODE	4	
D572		MA151K	DIODE	1	
IC1		LM2904M	IC	1	
IC2		LM2903M	IC	1	
IC3		LM2904M	IC	1	
IC4		NJM4558M	IC	1	
IC5		MC14538BF	IC	1	
IC6		UPD65031F405	IC	1	
IC7		MN53015VZW	IC	1	
IC8		MC14049UBF	IC	1	
IC9		MC14013BF	IC	1	
IC10		MM74HC221AM	IC	1	
IC11		AN78L05	IC	1	
IC12		MC14021BF	IC	1	
IC13		MC14094BF	IC	1	
IC14		MC14053BF	IC	1	(R)
IC15		MC14049UBF	IC	1	
IC16		MC14050BF	IC	1	
IC17		SN74LS01NS	IC	1	
IC18		MN51020VZZ	IC	1	
IC101		LM2904M	IC	1	
IC102		LM2903M	IC	1	
IC103		LM2904M	IC	1	
IC104		MC14538BF	IC	1	
IC105		AN79L09	IC	1	
IC106		AN78N09	IC	1	
IC107		DN74LS293S	IC	1	
IC108		MC74HC00AF	IC	1	
IC109		MN6064R	IC	1	
IC110		MN6168VIA	IC	1	
IC111		MC74HCU04F	IC	1	
IC112		MC14049UBF	IC	1	
IC113,14		LM2904M	IC	2	
IC115		LM2903M	IC	1	
IC116,17		LM2904M	IC	2	
IC118-20		MC14066BF	IC	3	
IC121		MC14052BF	IC	1	
IC122,23		MC14053BF	IC	2	(R)
IC124		MN53030VYA	IC	1	
IC125		MN53007VYC	IC	1	
IC126		UPC4558G	IC	1	
IC128		NJM4558M	IC	1	
IC129		MC14538BF	IC	1	
IC130		MC14013BF	IC	1	
IC131		LM2904M	IC	1	
IC132		UPC4558G	IC	1	
IC133		MN4030BS	IC	1	
IC134		MC14538BF	IC	1	
IC135		MC14053BF	IC	1	(R)
IC136		MC74HC02AF	IC	1	
IC137		MC14538BF	IC	1	
IC301		AN78L05	IC	1	
IC302		LM2904M	IC	1	
IC303		LM2902M	IC	1	
IC304		MC14053BF	IC	1	(R)
IC305		MC14066BF	IC	1	
IC306		LM2904M	IC	1	
IC307		LM2902M	IC	1	
IC308,09		LM2904M	IC	2	

Refer to the P.C.BOARDS LIST, page 6-1-1, before using this page.

Ref.No.		Part No.	Part Name & Description	Pcs	Remarks
IC310-13		MC14066BF	IC	4	
IC314		MC14028BF	IC	1	
IC315		MC14081BF	IC	1	
IC316		NJM2901M	IC	1	
IC318		MC14538BF	IC	1	
IC319		MC14049UBF	IC	1	
IC501		BA6149LS	IC	1	
IC502		PU4213	IC	1	
IC503-06		AN3821K	IC	4	
IC800		LM2904M	IC	1	
L1		VLP0017	COIL	1	
L2-L4		VLQEL05S221J	COIL 220UH	3	
L101,02		VLQEL05S221J	COIL 220UH	2	
L501		VLQ0214	COIL 50UH	1	
L504-07		VLQ0129	COIL 300UH	4	
Q1,Q2		UN2213	TRANSISTOR-RESISTOR	2	
Q5-Q9		UN2213	TRANSISTOR-RESISTOR	5	
Q12-16		UN2213	TRANSISTOR-RESISTOR	5	
Q101		2SD601	TRANSISTOR CHIP	1	(Q,R)
Q102		UN2213	TRANSISTOR-RESISTOR	1	
Q103		2SJ43	TRANSISTOR	1	
Q104		UN2213	TRANSISTOR-RESISTOR	1	
Q105		2SD601	TRANSISTOR CHIP	1	(Q,R)
Q106-08		UN2213	TRANSISTOR-RESISTOR	3	
Q109		2SD601	TRANSISTOR CHIP	1	(Q,R)
Q110-19		UN2213	TRANSISTOR-RESISTOR	10	
Q120		2SD601	TRANSISTOR CHIP	1	(Q,R)
Q121		UN2213	TRANSISTOR-RESISTOR	1	
Q122		2SD601	TRANSISTOR CHIP	1	(Q,R)
Q123,24		UN2213	TRANSISTOR-RESISTOR	2	
Q125		2SB709	TRANSISTOR CHIP	1	(Q,R)
Q126		2SD601	TRANSISTOR CHIP	1	(Q,R)
Q127		UN2115	COMBINATION PARTS	1	
Q128		UN2213	TRANSISTOR-RESISTOR	1	
Q129		UN2214	TRANSISTOR-RESISTOR	1	
Q130		2SK374	TRANSISTOR	1	
Q131-33		UN2213	TRANSISTOR-RESISTOR	3	
Q134,35		2SB709	TRANSISTOR CHIP	2	(Q,R)
Q136-39		UN2213	TRANSISTOR-RESISTOR	4	
Q301,02		UN2213	TRANSISTOR-RESISTOR	2	
Q303		UN2113	TRANSISTOR-RESISTOR	1	
Q304		UN2213	TRANSISTOR-RESISTOR	1	
Q305		UN2113	TRANSISTOR-RESISTOR	1	
Q306-09		UN2213	TRANSISTOR-RESISTOR	4	
Q312-14		UN2213	TRANSISTOR-RESISTOR	3	
Q316		2SD601	TRANSISTOR CHIP	1	(Q,R)
Q317		UN2213	TRANSISTOR-RESISTOR	1	
Q319		2SD601	TRANSISTOR CHIP	1	(Q,R)
Q320		UN2213	TRANSISTOR-RESISTOR	1	
Q336,37		UN2213	TRANSISTOR-RESISTOR	2	
Q340		UN2213	TRANSISTOR-RESISTOR	1	
Q343		UN2213	TRANSISTOR-RESISTOR	1	
Q346,47		UN2213	TRANSISTOR-RESISTOR	2	
Q501-04		2SB709	TRANSISTOR CHIP	4	(Q,R)
Q505		UN2113	TRANSISTOR-RESISTOR	1	
Q506		UN2213	TRANSISTOR-RESISTOR	1	
Q507		UN2113	TRANSISTOR-RESISTOR	1	
Q508,09		UN2213	TRANSISTOR-RESISTOR	2	
			RESISTORS		
R1		ERJ6GEYJ103	M.RESISTOR CH 1/10W 10K	1	
R2		ERJ6GEYJ683	M.RESISTOR CH 1/10W 68K	1	
R3		ERJ6GEYJ103	M.RESISTOR CH 1/10W 10K	1	
R4		ERJ6GEYJ105	M.RESISTOR CH 1/10W 1M	1	
R5,R6		ERJ6GEYJ103	M.RESISTOR CH 1/10W 10K	2	
R7		ERJ6GEYJ155	M.RESISTOR CH1/10W 1.5M	1	
R8		ERJ6GEYJ103	M.RESISTOR CH 1/10W 10K	1	

Ref.No.		Part No.	Part Name & Description	Pcs	Remarks
R9		ERJ6GEYJ125	M.RESISTOR CH1/10W 1.2M	1	
R10		ERJ6GEYJ563	M.RESISTOR CH 1/10W 56K	1	
R11,12		VRE0034E102	M.RESISTOR CH 1/10W 1K	2	
R13		ERJ6GEYJ123	M.RESISTOR CH1/10W 12K	1	
R14		ERJ6GEYJ823	M.RESISTOR CH 1/10W 82K	1	
R15		ERJ6GEYJ393	M.RESISTOR CH 1/10W 39K	1	
R16		ERJ6GEYJ564	M.RESISTOR CH 1/10W 560K	1	
R17		ERJ6GEYJ822	M.RESISTOR CH 1/10W 8.2K	1	
R18,19		ERJ6GEYJ183	M.RESISTOR CH 1/10W 18K	2	
R20		ERJ6GEYJ822	M.RESISTOR CH 1/10W 8.2K	1	
R21		ERJ6GEYJ104	M.RESISTOR CH 1/10W 100K	1	
R22		ERJ6GEYJ472	M.RESISTOR CH 1/10W 4.7K	1	
R23		ERJ6GEYJ103	M.RESISTOR CH 1/10W 10K	1	
R24		ERJ6GEYJ563	M.RESISTOR CH 1/10W 56K	1	
R25		ERJ6GEYJ102	M.RESISTOR CH 1/10W 1K	1	
R27		ERJ6GEYJ103	M.RESISTOR CH 1/10W 10K	1	
R28-31		ERJ6GEYJ563	M.RESISTOR CH 1/10W 56K	4	
R34,35		ERJ6GEYJ103	M.RESISTOR CH 1/10W 10K	2	
R36		ERJ6GEYJ562	M.RESISTOR CH 1/10W 5.6K	1	
R37-44		ERJ6GEYJ563	M.RESISTOR CH 1/10W 56K	8	
R45		ERJ6GEYJ104	M.RESISTOR CH 1/10W 100K	1	
R50		ERJ6GEYJ563	M.RESISTOR CH 1/10W 56K	1	
R51		ERJ6GEYJ103	M.RESISTOR CH 1/10W 10K	1	
R52		ERJ6GEYJ474	M.RESISTOR CH 1/10W 470K	1	
R53		ERJ6GEYJ563	M.RESISTOR CH 1/10W 56K	1	
R54		ERJ6GEYJ103	M.RESISTOR CH 1/10W 10K	1	
R55		ERJ6GEYJ474	M.RESISTOR CH 1/10W 470K	1	
R56		ERJ6GEYJ563	M.RESISTOR CH 1/10W 56K	1	
R57		ERJ6GEYJ103	M.RESISTOR CH 1/10W 10K	1	
R58		ERJ6GEYJ474	M.RESISTOR CH 1/10W 470K	1	
R59		ERJ6GEYJ103	M.RESISTOR CH 1/10W 10K	1	
R60		ERJ6GEYJ102	M.RESISTOR CH 1/10W 1K	1	
R61		ERJ6GEYJ223	M.RESISTOR CH 1/10W 22K	1	
R62		ERJ6GEYJ103	M.RESISTOR CH 1/10W 10K	1	
R64		ERJ6GEYJ153	M.RESISTOR CH 1/10W 15K	1	
R65		ERJ6GEYJ683	M.RESISTOR CH 1/10W 68K	1	
R69,70		ERJ6GEYJ102	M.RESISTOR CH 1/10W 1K	2	
R101		ERJ6GEYJ103	M.RESISTOR CH 1/10W 10K	1	
R102		ERJ6GEYJ184	M.RESISTOR CH1/10W 180K	1	
R103		ERJ6GEYJ102	M.RESISTOR CH 1/10W 1K	1	
R104		ERJ6GEYJ474	M.RESISTOR CH 1/10W 470K	1	
R105-07		ERJ6GEYJ103	M.RESISTOR CH 1/10W 10K	3	
R108		ERJ6GEYJ184	M.RESISTOR CH1/10W 180K	1	
R109		ERJ6GEYJ102	M.RESISTOR CH 1/10W 1K	1	
R110		ERJ6GEYJ474	M.RESISTOR CH 1/10W 470K	1	
R111		ERJ6GEYJ103	M.RESISTOR CH 1/10W 10K	1	
R112		ERJ6GEYJ153	M.RESISTOR CH 1/10W 15K	1	
R113		ERJ6GEYJ562	M.RESISTOR CH 1/10W 5.6K	1	
R114		ERJ6GEYJ224	M.RESISTOR CH 1/10W 220K	1	
R115		ERJ6GEYJ682	M.RESISTOR CH 1/10W 6.8K	1	
R116		ERJ6GEYJ153	M.RESISTOR CH 1/10W 15K	1	
R117		ERJ6GEYJ104	M.RESISTOR CH 1/10W 100K	1	
R118		ERJ6GEYJ103	M.RESISTOR CH 1/10W 10K	1	
R119		ERJ6GEYJ153	M.RESISTOR CH 1/10W 15K	1	
R120		ERJ6GEYJ152	M.RESISTOR CH 1/10W 1.5K	1	
R121,22		ERJ6GEYJ103	M.RESISTOR CH 1/10W 10K	2	
R123		ERJ6GEYJ105	M.RESISTOR CH 1/10W 1M	1	
R124		ERJ6GEYJ272	M.RESISTOR CH 1/10W 2.7K	1	
R125		ERJ6GEYJ103	M.RESISTOR CH 1/10W 10K	1	
R126-32		ERJ6GEYJ563	M.RESISTOR CH 1/10W 56K	7	
R133,34		ERJ6GEYJ103	M.RESISTOR CH 1/10W 10K	2	
R135,36		ERJ6GEYJ563	M.RESISTOR CH 1/10W 56K	2	
R137		ERJ6GEYJ103	M.RESISTOR CH 1/10W 10K	1	
R138		ERJ6GEYJ563	M.RESISTOR CH 1/10W 56K	1	
R139		ERJ6GEYJ224	M.RESISTOR CH 1/10W 220K	1	
R140		ERJ6GEYJ563	M.RESISTOR CH 1/10W 56K	1	
R141		ERJ6GEYJ224	M.RESISTOR CH 1/10W 220K	1	
R142		ERJ6GEYJ563	M.RESISTOR CH 1/10W 56K	1	
R143		ERJ6GEYJ223	M.RESISTOR CH 1/10W 22K	1	
R144		ERJ6GEYJ103	M.RESISTOR CH 1/10W 10K	1	
R145		ERJ6GEYJ563	M.RESISTOR CH 1/10W 56K	1	
R146		ERJ6GEYJ562	M.RESISTOR CH 1/10W 5.6K	1	
R147,48		ERJ6GEYJ273	M.RESISTOR CH1/10W 27K	2	
R149		ERJ6GEYJ104	M.RESISTOR CH 1/10W 100K	1	
R150		ERJ6GEYJ183	M.RESISTOR CH 1/10W 18K	1	

Refer to the P.C.BOARDS LIST, page 6-1-1, before using this page.

Ref.No.		Part No.	Part Name & Description	Pcs	Remarks
R151		ERJ6GEYJ103	M.RESISTOR CH 1/10W 10K	1	
R152		ERJ6GEYJ824	M.RESISTOR CH 1/10W 820K	1	
R153		ERJ6GEYJ562	M.RESISTOR CH 1/10W 5.6K	1	
R154-56		ERJ6GEYJ393	M.RESISTOR CH 1/10W 39K	3	
R157		ERJ6GEYJ103	M.RESISTOR CH 1/10W 10K	1	
R158		ERJ6GEYJ183	M.RESISTOR CH 1/10W 18K	1	
R159		ERJ6GEYJ682	M.RESISTOR CH 1/10W 6.8K	1	
R160		ERJ6GEYJ183	M.RESISTOR CH 1/10W 18K	1	
R161		ERJ6GEYJ103	M.RESISTOR CH 1/10W 10K	1	
R162		ERJ6GEYJ563	M.RESISTOR CH 1/10W 56K	1	
R163		ERJ6GEYJ103	M.RESISTOR CH 1/10W 10K	1	
R164		ERJ6GEYJ562	M.RESISTOR CH 1/10W 5.6K	1	
R165		ERJ6GEYJ333	M.RESISTOR CH 1/10W 33K	1	
R166		ERJ6GEYJ222	M.RESISTOR CH 1/10W 2.2K	1	
R167		ERJ6GEYJ183	M.RESISTOR CH 1/10W 18K	1	
R168		ERJ6GEYJ273	M.RESISTOR CH1/10W 27K	1	
R169		ERJ6GEYJ103	M.RESISTOR CH 1/10W 10K	1	
R170,71		ERJ6GEYJ563	M.RESISTOR CH 1/10W 56K	2	
R172		ERJ6GEYJ102	M.RESISTOR CH 1/10W 1K	1	
R181,82		ERJ6GEYJ563	M.RESISTOR CH 1/10W 56K	2	
R183		ERJ6GEYJ102	M.RESISTOR CH 1/10W 1K	1	
R184		ERJ6GEYJ563	M.RESISTOR CH 1/10W 56K	1	
R185		ERJ6GEYJ104	M.RESISTOR CH 1/10W 100K	1	
R186		ERJ6GEYJ102	M.RESISTOR CH 1/10W 1K	1	
R187,88		ERJ6GEYJ822	M.RESISTOR CH 1/10W 8.2K	2	
R189		ERJ6GEYJ561	M.RESISTOR CH 1/10W 560	1	
R190		ERJ6GEYJ472	M.RESISTOR CH 1/10W 4.7K	1	
R191,92		ERJ6GEYJ563	M.RESISTOR CH 1/10W 56K	2	
R193,94		ERJ6GEYJ273	M.RESISTOR CH1/10W 27K	2	
R195		ERJ6GEYJ562	M.RESISTOR CH 1/10W 5.6K	1	
R196		ERJ6GEYJ153	M.RESISTOR CH 1/10W 15K	1	
R197		ERJ6GEYJ332	M.RESISTOR CH 1/10W 3.3K	1	
R198		ERJ6GEYJ561	M.RESISTOR CH 1/10W 560	1	
R199		ERJ6GEYJ273	M.RESISTOR CH1/10W 27K	1	
R200		ERJ6GEYJ223	M.RESISTOR CH 1/10W 22K	1	
R201		ERJ6GEYJ473	M.RESISTOR CH 1/10W 47K	1	
R202		ERJ6GEYJ562	M.RESISTOR CH 1/10W 5.6K	1	
R203		ERJ6GEYJ561	M.RESISTOR CH 1/10W 560	1	
R204		ERJ6GEYJ562	M.RESISTOR CH 1/10W 5.6K	1	
R205		ERJ6GEYJ101	M.RESISTOR CH 1/10W 100	1	
R206		ERJ6GEYJ104	M.RESISTOR CH 1/10W 100K	1	
R207-09		ERJ6GEYJ102	M.RESISTOR CH 1/10W 1K	3	
R210		ERJ6GEYJ153	M.RESISTOR CH 1/10W 15K	1	
R211		ERJ6GEYJ183	M.RESISTOR CH 1/10W 18K	1	
R212		ERJ6GEYJ683	M.RESISTOR CH 1/10W 68K	1	
R213-15		ERJ6GEYJ563	M.RESISTOR CH 1/10W 56K	3	
R216		ERJ6GEYJ105	M.RESISTOR CH 1/10W 1M	1	
R218		ERJ6GEYJ563	M.RESISTOR CH 1/10W 56K	1	
R219		ERJ6GEYJ103	M.RESISTOR CH 1/10W 10K	1	
R220		ERJ6GEYJ104	M.RESISTOR CH 1/10W 100K	1	
R222-27		ERJ6GEYJ563	M.RESISTOR CH 1/10W 56K	6	
R228		ERJ6GEYJ104	M.RESISTOR CH 1/10W 100K	1	
R229		ERJ6GEYJ223	M.RESISTOR CH 1/10W 22K	1	
R230		ERJ6GEYJ563	M.RESISTOR CH 1/10W 56K	1	
R231		ERJ6GEYJ104	M.RESISTOR CH 1/10W 100K	1	
R232		VRE0034E272	M.RESISTOR CH 1/10W 2.7K	1	
R233		VRE0034E104	M.RESISTOR CH 1/10W 100K	1	
R234		VRE0034E272	M.RESISTOR CH 1/10W 2.7K	1	
R235		VRE0034E104	M.RESISTOR CH 1/10W 100K	1	
R236		ERJ6GEYJ563	M.RESISTOR CH 1/10W 56K	1	
R237		ERJ6GEYJ824	M.RESISTOR CH 1/10W 820K	1	
R238		ERJ6GEYJ102	M.RESISTOR CH 1/10W 1K	1	
R239		ERJ6GEYJ103	M.RESISTOR CH 1/10W 10K	1	
R240		ERJ6GEYJ222	M.RESISTOR CH 1/10W 2.2K	1	
R241		ERJ6GEYJ104	M.RESISTOR CH 1/10W 100K	1	
R242		ERJ6GEYJ334	M.RESISTOR CH 1/10W 330K	1	
R243		ERJ6GEYJ101	M.RESISTOR CH 1/10W 100	1	
R244,45		ERJ6GEYJ103	M.RESISTOR CH 1/10W 10K	2	
R246		ERJ6GEYJ102	M.RESISTOR CH 1/10W 1K	1	
R247		ERJ6GEYJ103	M.RESISTOR CH 1/10W 10K	1	
R248		ERJ6GEYJ562	M.RESISTOR CH 1/10W 5.6K	1	
R249		ERJ6GEYJ392	M.RESISTOR CH 1/10W 3.9K	1	
R250		ERJ6GEYJ184	M.RESISTOR CH1/10W 180K	1	
R251		ERJ6GEYJ224	M.RESISTOR CH 1/10W 220K	1	
R252		ERJ6GEYJ153	M.RESISTOR CH 1/10W 15K	1	

Ref.No.		Part No.	Part Name & Description	Pcs	Remarks
R253		ERJ6GEYJ474	M.RESISTOR CH 1/10W 470K	1	
R254-58		ERJ6GEYJ103	M.RESISTOR CH 1/10W 10K	5	
R259		ERJ6GEYJ223	M.RESISTOR CH 1/10W 22K	1	
R260		ERJ6GEYJ393	M.RESISTOR CH 1/10W 39K	1	
R261		ERJ6GEYJ823	M.RESISTOR CH 1/10W 82K	1	
R262		ERJ6GEYJ123	M.RESISTOR CH1/10W 12K	1	
R263		ERJ6GEYJ183	M.RESISTOR CH 1/10W 18K	1	
R264		ERJ6GEYJ333	M.RESISTOR CH 1/10W 33K	1	
R265		ERJ6GEYJ683	M.RESISTOR CH 1/10W 68K	1	
R266-69		ERJ6GEYJ563	M.RESISTOR CH 1/10W 56K	4	
R270		ERJ6GEYJ562	M.RESISTOR CH 1/10W 5.6K	1	
R271		ERJ6GEYJ103	M.RESISTOR CH 1/10W 10K	1	
R273		ERJ6GEYJ393	M.RESISTOR CH 1/10W 39K	1	
R274		ERJ6GEYJ181	M.RESISTOR CH1/10W 180	1	
R275		ERJ6GEYJ563	M.RESISTOR CH 1/10W 56K	1	
R276,77		VRE0034E102	M.RESISTOR CH 1/10W 1K	2	
R278		ERJ6GEYJ103	M.RESISTOR CH 1/10W 10K	1	
R279-81		ERJ6GEYJ563	M.RESISTOR CH 1/10W 56K	3	
R282		ERJ6GEYJ124	M.RESISTOR CH 1/10W 120K	1	
R283		ERJ6GEYJ103	M.RESISTOR CH 1/10W 10K	1	
R284		ERJ6GEYJ272	M.RESISTOR CH 1/10W 2.7K	1	
R285		ERJ6GEYJ122	M.RESISTOR CH1/10W 1.2K	1	
R286,87		ERJ6GEYJ472	M.RESISTOR CH 1/10W 4.7K	2	
R288		ERJ6GEYJ473	M.RESISTOR CH 1/10W 47K	1	
R289		ERJ6GEYJ823	M.RESISTOR CH 1/10W 82K	1	
R301		ERJ6GEYJ563	M.RESISTOR CH 1/10W 56K	1	
R302,03		ERJ6GEYJ103	M.RESISTOR CH 1/10W 10K	2	
R304		ERJ6GEYJ563	M.RESISTOR CH 1/10W 56K	1	
R305		ERJ6GEYJ104	M.RESISTOR CH 1/10W 100K	1	
R306		ERJ6GEYJ683	M.RESISTOR CH 1/10W 68K	1	
R307		ERJ6GEYJ223	M.RESISTOR CH 1/10W 22K	1	
R308		ERJ6GEYJ103	M.RESISTOR CH 1/10W 10K	1	
R309		ERJ6GEYJ472	M.RESISTOR CH 1/10W 4.7K	1	
R310		ERJ6GEYJ822	M.RESISTOR CH 1/10W 8.2K	1	
R311		ERJ6GEYJ392	M.RESISTOR CH 1/10W 3.9K	1	
R312		ERJ6GEYJ153	M.RESISTOR CH 1/10W 15K	1	
R313		ERJ6GEYJ332	M.RESISTOR CH 1/10W 3.3K	1	
R314		ERJ6GEYJ151	M.RESISTOR CH 1/10W 150	1	
R315,16		ERJ6GEYJ103	M.RESISTOR CH 1/10W 10K	2	
R317		ERJ6GEYJ683	M.RESISTOR CH 1/10W 68K	1	
R318		ERJ6GEYJ103	M.RESISTOR CH 1/10W 10K	1	
R319		ERJ6GEYJ273	M.RESISTOR CH1/10W 27K	1	
R320		ERJ6GEYJ104	M.RESISTOR CH 1/10W 100K	1	
R321		ERJ6GEYJ223	M.RESISTOR CH 1/10W 22K	1	
R322		ERJ6GEYJ563	M.RESISTOR CH 1/10W 56K	1	
R325,26		VRE0034E332	M.RESISTOR CH 1/10W 3.3K	2	
R327		ERJ6GEYJ223	M.RESISTOR CH 1/10W 22K	1	
R328		ERJ6GEYJ104	M.RESISTOR CH 1/10W 100K	1	
R329		ERJ6GEYJ393	M.RESISTOR CH 1/10W 39K	1	
R330		ERJ6GEYJ334	M.RESISTOR CH 1/10W 330K	1	
R331		ERJ6GEYJ474	M.RESISTOR CH 1/10W 470K	1	
R332,33		ERJ6GEYJ104	M.RESISTOR CH 1/10W 100K	2	
R334		ERJ6GEYJ105	M.RESISTOR CH 1/10W 1M	1	
R335		ERJ6GEYJ684	M.RESISTOR CH 1/10W 680K	1	
R336		ERJ6GEYJ473	M.RESISTOR CH 1/10W 47K	1	
R337,38		ERJ6GEYJ103	M.RESISTOR CH 1/10W 10K	2	
R339,40		VRE0034E332	M.RESISTOR CH 1/10W 3.3K	2	
R341		ERJ6GEYJ223	M.RESISTOR CH 1/10W 22K	1	
R342		ERJ6GEYJ104	M.RESISTOR CH 1/10W 100K	1	
R343		ERJ6GEYJ473	M.RESISTOR CH 1/10W 47K	1	
R344		ERJ6GEYJ334	M.RESISTOR CH 1/10W 330K	1	
R345		ERJ6GEYJ474	M.RESISTOR CH 1/10W 470K	1	
R346		ERJ6GEYJ104	M.RESISTOR CH 1/10W 100K	1	
R347		ERJ6GEYJ105	M.RESISTOR CH 1/10W 1M	1	
R348		ERJ6GEYJ684	M.RESISTOR CH 1/10W 680K	1	
R349,50		ERJ6GEYJ103	M.RESISTOR CH 1/10W 10K	2	
R351		ERJ6GEYJ472	M.RESISTOR CH 1/10W 4.7K	1	
R352-55		ERJ6GEYJ103	M.RESISTOR CH 1/10W 10K	4	
R356		ERJ6GEYJ222	M.RESISTOR CH 1/10W 2.2K	1	
R357		ERJ6GEYJ223	M.RESISTOR CH 1/10W 22K	1	
R358		ERJ6GEYJ104	M.RESISTOR CH 1/10W 100K	1	
R359,60		ERJ6GEYJ103	M.RESISTOR CH 1/10W 10K	2	
R362,63		ERJ6GEYJ103	M.RESISTOR CH 1/10W 10K	2	
R365		ERJ6GEYJ104	M.RESISTOR CH 1/10W 100K	1	
R366		ERJ6GEYJ103	M.RESISTOR CH 1/10W 10K	1	

Refer to the P.C.BOARDS LIST, page 6-1-1, before using this page.

Ref.No.		Part No.	Part Name & Description	Pcs	Remarks
R367,68		ERJ6GEYJ563	M.RESISTOR CH 1/10W 56K	2	
R369		ERJ6GEYJ104	M.RESISTOR CH 1/10W 100K	1	
R370,71		ERJ6GEYJ103	M.RESISTOR CH 1/10W 10K	2	
R373,74		ERJ6GEYJ103	M.RESISTOR CH 1/10W 10K	2	
R376		ERJ6GEYJ104	M.RESISTOR CH 1/10W 100K	1	
R378,79		ERJ6GEYJ563	M.RESISTOR CH 1/10W 56K	2	
R380		ERJ6GEYJ103	M.RESISTOR CH 1/10W 10K	1	
R381		ERJ6GEYJ473	M.RESISTOR CH 1/10W 47K	1	
R382		ERJ6GEYJ683	M.RESISTOR CH 1/10W 68K	1	
R383		ERJ6GEYJ152	M.RESISTOR CH 1/10W 1.5K	1	
R386		ERJ6GEYJ182	M.RESISTOR CH 1/10W 1.8K	1	
R388		ERJ6GEYJ273	M.RESISTOR CH1/10W 27K	1	
R389		ERJ6GEYJ153	M.RESISTOR CH 1/10W 15K	1	
R390		ERJ6GEYJ273	M.RESISTOR CH1/10W 27K	1	
R391		ERJ6GEYJ153	M.RESISTOR CH 1/10W 15K	1	
R392,93		ERJ6GEYJ103	M.RESISTOR CH 1/10W 10K	2	
R394,95		VREO034E102	M.RESISTOR CH 1/10W 1K	2	
R396,97		VREO034E472	M.RESISTOR CH 1/10W 4.7K	2	
R398		ERJ6GEYJ183	M.RESISTOR CH 1/10W 18K	1	
R424		ERJ6GEYJ222	M.RESISTOR CH 1/10W 2.2K	1	
R427		ERJ6GEYJ333	M.RESISTOR CH 1/10W 33K	1	
R428		ERJ6GEYJ223	M.RESISTOR CH 1/10W 22K	1	
R432,33		ERJ6GEYJ393	M.RESISTOR CH 1/10W 39K	2	
R434		ERJ6GEYJ331	M.RESISTOR CH 1/10W 330	1	
R435		ERJ6GEYJ103	M.RESISTOR CH 1/10W 10K	1	
R437		ERJ6GEYJ684	M.RESISTOR CH 1/10W 680K	1	
R440		ERJ6GEYJ562	M.RESISTOR CH 1/10W 5.6K	1	
R441,42		*ERJ6GEYJ105*	*M.RESISTOR CH 1/10W 1M*	2	
R443		ERJ6GEYJ223	M.RESISTOR CH 1/10W 22K	1	
R445		ERJ6GEYOROO	M.RESISTOR CH 1/10W 0	1	
R446,47		ERJ6GEYJ562	M.RESISTOR CH 1/10W 5.6K	2	
R448,49		ERJ6GEYJ105	M.RESISTOR CH 1/10W 1M	2	
R460,61		ERJ6GEYJ103	M.RESISTOR CH 1/10W 10K	2	
R462		ERJ6GEYJ223	M.RESISTOR CH 1/10W 22K	1	
R463		ERJ6GEYJ331	M.RESISTOR CH 1/10W 330	1	
R464		ERJ6GEYOROO	M.RESISTOR CH 1/10W 0	1	
R465		ERJ6GEYJ223	M.RESISTOR CH 1/10W 22K	1	
R466		ERJ6GEYJ103	M.RESISTOR CH 1/10W 10K	1	
R467		ERJ6GEYJ473	M.RESISTOR CH 1/10W 47K	1	
R469		ERJ6GEYJ564	M.RESISTOR CH 1/10W 560K	1	
R470		ERJ6GEYJ394	M.RESISTOR CH 1/10W 390K	1	
R501		ERJ6GEYJ102	M.RESISTOR CH 1/10W 1K	1	
R502		ERJ6GEYJ103	M.RESISTOR CH 1/10W 10K	1	
R503		ERJ6GEYJ102	M.RESISTOR CH 1/10W 1K	1	
R504-07		ERJ6GEYJ821	M.RESISTOR CH 1/10W 820	4	
R508		ERJ6GEYJ473	M.RESISTOR CH 1/10W 47K	1	
R509-12		ERJ6GEYJ391	M.RESISTOR CH 1/10W 390	4	
R513		ERJ6GEYJ103	M.RESISTOR CH 1/10W 10K	1	
R514		ERJ6GEYJ224	M.RESISTOR CH 1/10W 220K	1	
R515		ERJ6GEYJ273	M.RESISTOR CH1/10W 27K	1	
R516		ERJ6GEYJ103	M.RESISTOR CH 1/10W 10K	1	
R517		ERJ6GEYJ272	M.RESISTOR CH 1/10W 2.7K	1	
R518		ERJ6GEYJ104	M.RESISTOR CH 1/10W 100K	1	
R519		ERJ6GEYJ392	M.RESISTOR CH 1/10W 3.9K	1	
R520		ERJ6GEYJ333	M.RESISTOR CH 1/10W 33K	1	
R521,22		ERJ6GEYJ224	M.RESISTOR CH 1/10W 220K	2	
R523		ERX12SJR47	M.RESISTOR 1/2W 0.47	1	
R524		ERJ6GEYJ273	M.RESISTOR CH1/10W 27K	1	
R525		ERJ6GEYJ272	M.RESISTOR CH 1/10W 2.7K	1	
R526		ERJ6GEYJ103	M.RESISTOR CH 1/10W 10K	1	
R527		ERJ6GEYJ104	M.RESISTOR CH 1/10W 100K	1	
R528		ERJ6GEYJ224	M.RESISTOR CH 1/10W 220K	1	
R529		ERJ6GEYJ392	M.RESISTOR CH 1/10W 3.9K	1	
R530		ERJ6GEYJ223	M.RESISTOR CH 1/10W 22K	1	
R531		ERJ6GEYJ224	M.RESISTOR CH 1/10W 220K	1	
R532		ERX12SJR68	M.RESISTOR 1/2W 0.68	1	
R533		ERJ6GEYJ224	M.RESISTOR CH 1/10W 220K	1	
R534		ERJ6GEYJ273	M.RESISTOR CH1/10W 27K	1	
R535		ERJ6GEYJ103	M.RESISTOR CH 1/10W 10K	1	
R536		ERJ6GEYJ104	M.RESISTOR CH 1/10W 100K	1	
R537		ERX12SJR47	M.RESISTOR 1/2W 0.47	1	
R538-40		ERJ6GEYJ224	M.RESISTOR CH 1/10W 220K	3	
R541		ERJ6GEYJ272	M.RESISTOR CH 1/10W 2.7K	1	
R542		ERJ6GEYJ223	M.RESISTOR CH 1/10W 22K	1	
R543		ERJ6GEYJ273	M.RESISTOR CH1/10W 27K	1	

Ref.No.		Part No.	Part Name & Description	Pcs	Remarks
R544		ERJ6GEYJ104	M.RESISTOR CH 1/10W 100K	1	
R545		ERJ6GEYJ103	M.RESISTOR CH 1/10W 10K	1	
R546		ERX12SJR47	M.RESISTOR 1/2W 0.47	1	
R547-49		ERJ6GEYJ224	M.RESISTOR CH 1/10W 220K	3	
R550		ERJ6GEYJ272	M.RESISTOR CH 1/10W 2.7K	1	
R551		ERJ6GEYJ223	M.RESISTOR CH 1/10W 22K	1	
R553		ERJ6GEYOROO	M.RESISTOR CH 1/10W 0	1	
R554		ERJ6GEYJ272	M.RESISTOR CH 1/10W 2.7K	1	
R555-57		ERJ6GEYOROO	M.RESISTOR CH 1/10W 0	3	
SW1,W2		VSR0032	VOLTAGE SELECT SWITCH	2	
SW3		VSS0126	SWITCH	1	
TP3-P7		VJR0582	PACK PIN	5	
TP13		VJR0582	PACK PIN	1	
TP15-17		VJR0582	PACK PIN	3	
TP19,20		VJR0582	PACK PIN	2	
TP102-05		VJR0582	PACK PIN	4	
TP108-18		VJR0582	PACK PIN	11	
TP201,02		VJR0582	PACK PIN	2	
TP302-04		VJR0582	PACK PIN	3	
TP306		VJR0582	PACK PIN	1	
TP309-12		VJR0582	PACK PIN	4	
TPG1,G2		VJR0582	PACK PIN	2	
VC101		ECV1ZW30X53	V.CAPACITOR 30P	1	
VR1		VRV0109B503	V.RESISTOR 50K	1	
VR3		VRV0109B203	V.RESISTOR 20K	1	
VR101		VRV0109B203	V.RESISTOR 20K	1	
VR102		VRV0109B103	V.RESISTOR 10K	1	
VR103		VRV0109B203	V.RESISTOR 20K	1	
VR104		VRV0109B502	V.RESISTOR 5K	1	
VR105		VRV0109B104	V.RESISTOR 100K	1	
VR301		VRV0109B502	V.RESISTOR 5K	1	
VR302,03		VRV0109B202	V.RESISTOR 2K	2	
VR304-07		VRV0109B503	V.RESISTOR 50K	4	
VR308		VRV0109B202	V.RESISTOR 2K	1	
VR309		VRV0109B503	V.RESISTOR 50K	1	
X101		VSX0081	CRYSTAL OSCILLATOR	1	
X501		VSX0136	CRYSTAL OSCILLATOR	1	
			MISCELLANEOUS		
		VML2143	CARD PULLER	1	
		VML2144	CARD PULLER	1	
		VMS4174	PIN	6	
		VMZ1091	BARRIER	1	
		VMZ1547	BARRIER	1	
		VSC2286	SHIELD CASE	1	
		VSC3056	SHIELD CASE	1	
		VXA3966	P.C.B. SHIELD PLATE	1	
		XNG26E	NUT	4	
		XYNV3+K6FR	SCREW	6	
		XYN26+C12	SCREW	4	

Refer to the P.C.BOARDS LIST, page 6-1-1, before using this page.

Ref.No.		Part No.	Part Name & Description	Pcs	Remarks
	■	VEP82061C	P.C.BOARD W/COMPONENT		FOR AU-62-P
			W5 SERVO		
			CAPACITORS		
C1		ECQM1H273JF	P.CAPACITOR 50V 0.027U	1	
C1,C2		ECUM1H103ZFN	C.CAPACITOR CH 50V 0.01U	2	
C2		ECUM1H152JN	C.CAPACITOR CH 50V 1500P	1	
C3,C4		ECUM1H101JCN	C.CAPACITOR CH 50V 100P	2	
C5		ECEA1CU100	E.CAPACITOR 16V 10U	1	
C6		ECEA0JU101	E.CAPACITOR 6.3V 100U	1	
C7		ECEA1AU470	E.CAPACITOR 10V 47U	1	
C8		ECUM1H103ZFN	C.CAPACITOR CH 50V 0.01U	1	
C9		ECQM1H154JF	P.CAPACITOR 50V 0.15U	1	
C10		ECEA1HN2R2S	E.CAPACITOR 50V 2.2U	1	
C11		ECQM1H223JF	P.CAPACITOR 50V 0.022U	1	
C13		ECQP1H822JZ	P.CAPACITOR 50V 8200P	1	
C14		ECQM1H682JV	P.CAPACITOR 50V 6800P	1	
C15,16		ECUM1H103ZFN	C.CAPACITOR CH 50V 0.01U	2	
C17		ECQM1H394JV	P.CAPACITOR 50V 0.39U	1	
C18		ECEA1HU4R7	E.CAPACITOR 50V 4.7U	1	
C19		ECEA1AU470	E.CAPACITOR 10V 47U	1	
C20,21		ECUM1H103ZFN	C.CAPACITOR CH 50V 0.01U	2	
C22		ECEA1HU2R2	E.CAPACITOR 50V 2.2U	1	
C23,24		ECUM1E104ZFN	C.CAPACITOR CH 25V 0.1U	2	
C25		ECUM1H103ZFN	C.CAPACITOR CH 50V 0.01U	1	
C26		ECEA1AU470	E.CAPACITOR 10V 47U	1	
C27		ECUM1H103ZFN	C.CAPACITOR CH 50V 0.01U	1	
C28		ECEA1AU470	E.CAPACITOR 10V 47U	1	
C29		ECEA1AU330	E.CAPACITOR 10V 33U	1	
C30		ECUM1H103ZFN	C.CAPACITOR CH 50V 0.01U	1	
C31		ECEA1AU330	E.CAPACITOR 10V 33U	1	
C32		ECEA1AU470	E.CAPACITOR 10V 47U	1	
C33		ECUM1H103ZFN	C.CAPACITOR CH 50V 0.01U	1	
C34		ECEA1AU470	E.CAPACITOR 10V 47U	1	
C39		ECUM1H331JCN	C.CAPACITOR CH 50V 330P	1	
C40-42		ECUM1H103ZFN	C.CAPACITOR CH 50V 0.01U	3	
C43		ECUM1H101JCN	C.CAPACITOR CH 50V 100P	1	
C46		ECEA1CU470	E.CAPACITOR 16V 47U	1	
C47,48		ECUM1E104ZFN	C.CAPACITOR CH 25V 0.1U	2	
C101		ECQM1H104JF	P.CAPACITOR 50V 0.1U	1	
C102		ECUM1H151JCN	C.CAPACITOR CH 50V 150P	1	
C103		ECEA1CU470	E.CAPACITOR 16V 47U	1	
C104		ECEA1HU2R2	E.CAPACITOR 50V 2.2U	1	
C105		ECEA1CU101	E.CAPACITOR 16V 100U	1	
C106		ECQM1H104JF	P.CAPACITOR 50V 0.1U	1	
C107		ECUM1H151JCN	C.CAPACITOR CH 50V 150P	1	
C108		ECUM1H102JCN	C.CAPACITOR CH 50V 1000P	1	
C109		ECUM1H221JCN	C.CAPACITOR CH 50V 220P	1	
C110		ECQM1H103JF	P.CAPACITOR 50V 0.01U	1	
C111		ECEA1HU010	E.CAPACITOR 50V 1U	1	
C112		ECQM1H154JF	P.CAPACITOR 50V 0.15U	1	
C113		ECEA1HU010	E.CAPACITOR 50V 1U	1	
C114		ECEA1CU470	E.CAPACITOR 16V 47U	1	
C115		ECUM1H103ZFN	C.CAPACITOR CH 50V 0.01U	1	
C116		ECEA1CU470	E.CAPACITOR 16V 47U	1	
C117		ECUM1H103ZFN	C.CAPACITOR CH 50V 0.01U	1	
C118		ECEA1CU470	E.CAPACITOR 16V 47U	1	
C119		ECUM1H103ZFN	C.CAPACITOR CH 50V 0.01U	1	
C120		ECEA1CU470	E.CAPACITOR 16V 47U	1	
C121		ECUM1H103ZFN	C.CAPACITOR CH 50V 0.01U	1	
C122		ECEA1CU470	E.CAPACITOR 16V 47U	1	
C123		ECUM1H330JCN	C.CAPACITOR CH 50V 33P	1	
C124		ECUM1H103ZFN	C.CAPACITOR CH 50V 0.01U	1	
C125		ECEA1CU470	E.CAPACITOR 16V 47U	1	
C126		ECQM1H562JF	P.CAPACITOR 50V 5600P	1	
C127		ECQM1H393JF	P.CAPACITOR 50V 0.039U	1	
C128		ECQM1H104JF	P.CAPACITOR 50V 0.1U	1	
C129		ECEA1OM22	E.CAPACITOR 10V 22U	1	

Ref.No.		Part No.	Part Name & Description	Pcs	Remarks
C130		ECEA1HU010	E.CAPACITOR 50V 1U	1	
C131		ECEA1EN220S	E.CAPACITOR 25V 22U	1	
C132		ECQM1H103JF	P.CAPACITOR 50V 0.01U	1	
C133-36		ECUM1H103ZFN	C.CAPACITOR CH 50V 0.01U	4	
C137		ECEA1CU101	E.CAPACITOR 16V 100U	1	
C139		ECQM1H822JF	P.CAPACITOR 50V 8200P	1	
C140		ECUM1H102JCN	C.CAPACITOR CH 50V 1000P	1	
C141		ECEA1HN010S	E.CAPACITOR 50V 1U	1	
C143		ECEA1CU470	E.CAPACITOR 16V 47U	1	
C145		ECEA1AU470	E.CAPACITOR 10V 47U	1	
C146		ECUM1H103ZFN	C.CAPACITOR CH 50V 0.01U	1	
C147		ECEA1HUR47	E.CAPACITOR 50V 0.47U	1	
C148		ECEA1CU470	E.CAPACITOR 16V 47U	1	
C149,50		ECUM1H103ZFN	C.CAPACITOR CH 50V 0.01U	2	
C151		ECEA1HN010S	E.CAPACITOR 50V 1U	1	
C152,53		ECUM1H103ZFN	C.CAPACITOR CH 50V 0.01U	2	
C154		ECUM1H152KBN	C.CAPACITOR CH 50V 1500P	1	
C155		ECEA1HN100S	E.CAPACITOR 50V 10U	1	
C156		ECEA1HUR47	E.CAPACITOR 50V 0.47U	1	
C157,58		ECUM1H103ZFN	C.CAPACITOR CH 50V 0.01U	2	
C159		ECQM1H104JF	P.CAPACITOR 50V 0.1U	1	
C160		ECUM1H103ZFN	C.CAPACITOR CH 50V 0.01U	1	
C161		ECQM1H104JF	P.CAPACITOR 50V 0.1U	1	
C162,63		ECQM1H103JF	P.CAPACITOR 50V 0.01U	2	
C164		ECEA1HU4R7	E.CAPACITOR 50V 4.7U	1	
C165-67		ECUM1H103ZFN	C.CAPACITOR CH 50V 0.01U	3	
C168		ECEA1EU100	E.CAPACITOR 25V 10U	1	
C169		ECUM1H103KBN	C.CAPACITOR CH 50V 0.01U	1	
C170		ECUM1H471JCN	C.CAPACITOR CH 50V 470P	1	
C171,72		ECUM1H103ZFN	C.CAPACITOR CH 50V 0.01U	2	
C173		ECUM1H101JCN	C.CAPACITOR CH 50V 100P	1	
C174		ECUM1H103ZFN	C.CAPACITOR CH 50V 0.01U	1	
C175		ECQM1H184JF	P.CAPACITOR 50V 0.18U	1	
C176		ECEA1CU470	E.CAPACITOR 16V 47U	1	
C177		ECQM1H222JF	P.CAPACITOR 50V 2200P	1	
C301		ECEA1AU330	E.CAPACITOR 10V 33U	1	
C302		ECUM1H103ZFN	C.CAPACITOR CH 50V 0.01U	1	
C303		ECQM1H562JF	P.CAPACITOR 50V 5600P	1	
C304		ECQM1H392JF	P.CAPACITOR 50V 3900P	1	
C305		ECUM1H103ZFN	C.CAPACITOR CH 50V 0.01U	1	
C306		ECQM1H123JF	P.CAPACITOR 50V 0.012U	1	
C307		ECEA1CN470S	E.CAPACITOR 16V 47U	1	
C308		ECEA0JU221	E.CAPACITOR 6.3V 220U	1	
C309		ECEA1HU2R2	E.CAPACITOR 50V 2.2U	1	
C310		ECQM1H104JF	P.CAPACITOR 50V 0.1U	1	
C311		ECUM1H153KBN	C.CAPACITOR CH 50V 0.015U	1	
C312		ECEA1HN010S	E.CAPACITOR 50V 1U	1	
C313,14		ECUM1H103ZFN	C.CAPACITOR CH 50V 0.01U	2	
C315		ECQM1H104JF	P.CAPACITOR 50V 0.1U	1	
C316		ECUM1E273KBN	C.CAPACITOR CH 25V 0.027U	1	
C317		ECEA1HN2R2S	E.CAPACITOR 50V 2.2U	1	
C318-20		ECUM1H103ZFN	C.CAPACITOR CH 50V 0.01U	3	
C321		ECEA1CU100	E.CAPACITOR 16V 10U	1	
C322		ECEA0JU470	E.CAPACITOR 6.3V 47U	1	
C323		ECUM1H103ZFN	C.CAPACITOR CH 50V 0.01U	1	
C324		ECEA0JU102	E.CAPACITOR 6.3V 1000U	1	
C325		ECUM1H103ZFN	C.CAPACITOR CH 50V 0.01U	1	
C327		ECEA1HU2R2	E.CAPACITOR 50V 2.2U	1	
C328,29		ECEA1CU100	E.CAPACITOR 16V 10U	2	
C330-36		ECUM1H103ZFN	C.CAPACITOR CH 50V 0.01U	7	
C337		ECEA1HU2R2	E.CAPACITOR 50V 2.2U	1	
C338,39		ECEA1CU100	E.CAPACITOR 16V 10U	2	
C401-03		ECUM1H103ZFN	C.CAPACITOR CH 50V 0.01U	3	
C406		ECUM1H103ZFN	C.CAPACITOR CH 50V 0.01U	1	
C408-10		ECUM1H103ZFN	C.CAPACITOR CH 50V 0.01U	3	
C454		ECUM1H103ZFN	C.CAPACITOR CH 50V 0.01U	1	
C492		ECUM1H103ZFN	C.CAPACITOR CH 50V 0.01U	1	
C495,96		ECUM1H103ZFN	C.CAPACITOR CH 50V 0.01U	2	
C501		ECUM1H103ZFN	C.CAPACITOR CH 50V 0.01U	1	
C502		ECEA1CU470	E.CAPACITOR 16V 47U	1	
C503		ECEA1ESS471	E.CAPACITOR 25V 470U	1	
C504		ECUM1E473KBN	C.CAPACITOR CH 25V 0.047U	1	
C505		ECUM1H561JCN	C.CAPACITOR CH 50V 560P	1	
C506		ECUM1H820JCN	C.CAPACITOR CH 50V 82P	1	
C507		ECUM1H561JCN	C.CAPACITOR CH 50V 560P	1	

Refer to the P.C.BOARDS LIST, page 6-1-1, before using this page.

Ref.No.		Part No.	Part Name & Description	Pcs	Remarks
C508		ECEA1HU010	E.CAPACITOR 50V 1U	1	
C509-13		ECEA1ESS101	E.CAPACITOR 25V 100U	5	
C514		ECQM1H104JF	P.CAPACITOR 50V 0.1U	1	
C515		ECEA1EU4R7	E.CAPACITOR 25V 4.7U	1	
C516-18		ECEA1HN4R7S	E.CAPACITOR 50V 4.7U	3	
C519		ECEA1HU010	E.CAPACITOR 50V 1U	1	
C520-22		ECUM1H103KBN	C.CAPACITOR CH 50V 0.01U	3	
C523		ECQM1H104JF	P.CAPACITOR 50V 0.1U	1	
C524		ECEA1EU4R7	E.CAPACITOR 25V 4.7U	1	
C525,26		ECEA1HN4R7S	E.CAPACITOR 50V 4.7U	2	
C527		ECQM1H104JF	P.CAPACITOR 50V 0.1U	1	
C528		ECEA1HU010	E.CAPACITOR 50V 1U	1	
C529-31		ECUM1H103KBN	C.CAPACITOR CH 50V 0.01U	3	
C532		ECEA1EU4R7	E.CAPACITOR 25V 4.7U	1	
C533,34		ECEA1HN4R7S	E.CAPACITOR 50V 4.7U	2	
C535		ECQM1H104JF	P.CAPACITOR 50V 0.1U	1	
C536		ECEA1HU010	E.CAPACITOR 50V 1U	1	
C537-39		ECUM1H103KBN	C.CAPACITOR CH 50V 0.01U	3	
C540		ECEA1EU4R7	E.CAPACITOR 25V 4.7U	1	
C541-43		ECEA1HN4R7S	E.CAPACITOR 50V 4.7U	3	
C544		ECQM1H104JF	P.CAPACITOR 50V 0.1U	1	
C545		ECEA1HU010	E.CAPACITOR 50V 1U	1	
C546-48		ECUM1H103KBN	C.CAPACITOR CH 50V 0.01U	3	
C549		ECEA1AU470	E.CAPACITOR 10V 47U	1	
C550		ECUM1E473KBN	C.CAPACITOR CH 25V 0.047U	1	
C551		ECEA1HN4R7S	E.CAPACITOR 50V 4.7U	1	
C552		ECQM1H104JF	P.CAPACITOR 50V 0.1U	1	
C553		ECEA1HN4R7S	E.CAPACITOR 50V 4.7U	1	
C554		ECUM1H103ZFN	C.CAPACITOR CH 50V 0.01U	1	
C555		ECEA1VU101	E.CAPACITOR 35V 100U	1	
C558-63		ECQM1H104JF	P.CAPACITOR 50V 0.1U	6	
C900-11		ECUM1H103ZFN	C.CAPACITOR CH 50V 0.01U	12	
D1		MA151K	DIODE	1	
D1		MA151K	DIODE	1	
D2,D3		MA151WA	DIODE	2	
D4		MA151K	DIODE	1	
D4-D6		MA151K	DIODE	3	
D101		MA151K	DIODE	1	
D102		MA153	DIODE	1	
D103		MA151WK	DIODE	1	
D104		MA151K	DIODE	1	
D105		MA151WK	DIODE	1	
D106,07		MA151WA	DIODE	2	
D108		MA151K	DIODE	1	
D109		MA151WK	DIODE	1	
D112		MA151WK	DIODE	1	
D113,14		MA151K	DIODE	2	
D115		MA153	DIODE	1	
D116		MA151K	DIODE	1	
D119		MA151WK	DIODE	1	
D120-22		MA151WA	DIODE	3	
D123		MA151K	DIODE	1	
D124		MA151WA	DIODE	1	
D125		MA151K	DIODE	1	
D126,27		MA153	DIODE	2	
D301,02		MA151K	DIODE	2	
D303		MA151WK	DIODE	1	
D304		MA151WA	DIODE	1	
D305		MA151K	DIODE	1	
D307		MA151WA	DIODE	1	
D309		MA151WK	DIODE	1	
D310		MA151K	DIODE	1	
D313		MA151WA	DIODE	1	
D314-17		MA151WK	DIODE	4	
D318		MA151K	DIODE	1	
D319,20		MA151WK	DIODE	2	
D321,22		MA151K	DIODE	2	
D323,24		MA151WK	DIODE	2	
D325		MA151K	DIODE	1	
D328-30		MA151K	DIODE	3	
D332		MA151K	DIODE	1	
D333		MA151WK	DIODE	1	

Ref.No.		Part No.	Part Name & Description	Pcs	Remarks
D334-37		MA151K	DIODE	4	
D338		MA151WK	DIODE	1	
D340		MA151WA	DIODE	1	
D341		MA151K	DIODE	1	
D349-51		MA165	DIODE	3	
D501		MA151K	DIODE	1	
D502		MA151WK	DIODE	1	
D503		MA153	DIODE	1	
D504		MA151WK	DIODE	1	
D505,06		MA151K	DIODE	2	
D507		MA151WK	DIODE	1	
D508,09		MA151K	DIODE	2	
D510		MA151WK	DIODE	1	
D511		MA151K	DIODE	1	
D514-17		MA701A	DIODE	4	
D572		MA151K	DIODE	1	
IC1		LM2904M	IC	1	
IC1		MC74HC02AF	IC	1	
IC2		LM2903M	IC	1	
IC2		MC74HC02AF	IC	1	
IC3		LM2904M	IC	1	
IC4		NJM4558M	IC	1	
IC5		MC14538BF	IC	1	
IC6		UPD65031F405	IC	1	
IC7		MN53015VZW	IC	1	
IC8		MC14049UBF	IC	1	
IC9		MC14013BF	IC	1	
IC10		MM74HC221AM	IC	1	
IC11		AN78L05	IC	1	
IC12		MC14021BF	IC	1	
IC13		MC14094BF	IC	1	
IC14		UPD4053BG	IC	1	
IC15		MC14049UBF	IC	1	
IC16		MC14050BF	IC	1	
IC18		MN51020VZZ	IC	1	
IC101		LM2904M	IC	1	
IC102		LM2903M	IC	1	
IC103		LM2904M	IC	1	
IC104		MC14538BF	IC	1	
IC105		AN79L09	IC	1	
IC106		AN78N09	IC	1	
IC107		DN74LS293S	IC	1	
IC108		MC74HC00AF	IC	1	
IC109		MN6064R	IC	1	
IC110		MN6168VIA	IC	1	
IC111		MC74HCU04F	IC	1	
IC112		MC14049UBF	IC	1	
IC113,14		LM2904M	IC	2	
IC115		LM2903M	IC	1	
IC116,17		LM2904M	IC	2	
IC118-20		MC14066BF	IC	3	
IC121		UPD4052BG	IC	1	
IC123		UPD4053BG	IC	1	
IC124		MN53030VYA	IC	1	
IC125		MN53007VYC	IC	1	
IC126		UPC4558G	IC	1	
IC128		NJM4558M	IC	1	
IC129		MC14538BF	IC	1	
IC130		MC14013BF	IC	1	
IC131		LM2904M	IC	1	
IC132		UPC4558G	IC	1	
IC133		MN4030BS	IC	1	
IC134		MC14538BF	IC	1	
IC135		UPD4053BG	IC	1	
IC137		MC14538BF	IC	1	
IC301		AN78L05	IC	1	
IC302		LM2904M	IC	1	
IC303		LM2902M	IC	1	
IC304		UPD4053BG	IC	1	
IC305		MC14066BF	IC	1	
IC306		LM2904M	IC	1	
IC307		LM2902M	IC	1	

Refer to the P.C.BOARDS LIST, page 6-1-1, before using this page.

Ref.No.		Part No.	Part Name & Description	Pcs	Remarks
IC308,09		LM2904M	IC	2	
IC310-13		MC14066BF	IC	4	
IC314		MC14028BF	IC	1	
IC315		MC14081BF	IC	1	
IC316		NJM2901M	IC	1	
IC317,18		MC14538BF	IC	2	
IC319		MC14049UBF	IC	1	
IC501		BA6149LS	IC	1	
IC502		PU4213	IC	1	
IC503-06		AN3821K	IC	4	
IC800		LM2904M	IC	1	
L1		VLP0017	COIL	1	
L2-L4		VLQEL05S221J	COIL 220UH	3	
L101,02		VLQEL05S221J	COIL 220UH	2	
L501		VLQ0214	COIL 50UH	1	
L504-07		VLQ0129	COIL 300UH	4	
Q1		UN2213	TRANSISTOR-RESISTOR	1	
Q1,Q2		UN2213	TRANSISTOR-RESISTOR	2	
Q2		UN2213	TRANSISTOR-RESISTOR	1	
Q8,Q9		UN2213	TRANSISTOR-RESISTOR	2	
Q15,16		UN2213	TRANSISTOR-RESISTOR	2	
Q101		2SD601	TRANSISTOR CHIP	1	(Q,R)
Q102		UN2213	TRANSISTOR-RESISTOR	1	
Q103		2SJ43	TRANSISTOR	1	
Q104		UN2213	TRANSISTOR-RESISTOR	1	
Q105		2SD601	TRANSISTOR CHIP	1	(Q,R)
Q106-08		UN2213	TRANSISTOR-RESISTOR	3	
Q109		2SD601	TRANSISTOR CHIP	1	(Q,R)
Q110-19		UN2213	TRANSISTOR-RESISTOR	10	
Q120		2SD601	TRANSISTOR CHIP	1	(Q,R)
Q123,24		UN2213	TRANSISTOR-RESISTOR	2	
Q128		UN2213	TRANSISTOR-RESISTOR	1	
Q129		UN2214	TRANSISTOR-RESISTOR	1	
Q130		2SK374	TRANSISTOR	1	
Q131-33		UN2213	TRANSISTOR-RESISTOR	3	
Q134,35		2SB709	TRANSISTOR CHIP	2	(Q,R)
Q137-39		UN2213	TRANSISTOR-RESISTOR	3	
Q140		MA151A	DIODE	1	
Q301,02		UN2213	TRANSISTOR-RESISTOR	2	
Q303		UN2113	TRANSISTOR-RESISTOR	1	
Q304		UN2213	TRANSISTOR-RESISTOR	1	
Q305		UN2113	TRANSISTOR-RESISTOR	1	
Q306-09		UN2213	TRANSISTOR-RESISTOR	4	
Q312-14		UN2213	TRANSISTOR-RESISTOR	3	
Q316		2SD601	TRANSISTOR CHIP	1	(Q,R)
Q317		UN2213	TRANSISTOR-RESISTOR	1	
Q319		2SD601	TRANSISTOR CHIP	1	(Q,R)
Q320		UN2213	TRANSISTOR-RESISTOR	1	
Q326		UN2213	TRANSISTOR-RESISTOR	1	
Q330-33		UN2213	TRANSISTOR-RESISTOR	4	
Q336,37		UN2213	TRANSISTOR-RESISTOR	2	
Q339,40		UN2213	TRANSISTOR-RESISTOR	2	
Q343		UN2213	TRANSISTOR-RESISTOR	1	
Q501-04		2SB709	TRANSISTOR CHIP	4	(Q,R)
Q505		UN2113	TRANSISTOR-RESISTOR	1	
Q506		UN2213	TRANSISTOR-RESISTOR	1	
Q507		UN2113	TRANSISTOR-RESISTOR	1	
Q508,09		UN2213	TRANSISTOR-RESISTOR	2	
			RESISTORS		
R1		ERJ6GEYJ103	M.RESISTOR CH 1/10W 10K	1	
R1		ERJ6GEYJ472	M.RESISTOR CH 1/10W 4.7K	1	
R2		ERJ6GEYJ562	M.RESISTOR CH 1/10W 5.6K	1	
R2		ERJ6GEYJ683	M.RESISTOR CH 1/10W 68K	1	
R3		ERJ6GEYJ103	M.RESISTOR CH 1/10W 10K	1	
R3		ERJ6GEYJ562	M.RESISTOR CH 1/10W 5.6K	1	
R4		ERJ6GEYJ105	M.RESISTOR CH 1/10W 1M	1	

Ref.No.		Part No.	Part Name & Description	Pcs	Remarks
R4		ERJ6GEYJ105	M.RESISTOR CH 1/10W 1M	1	
R5		ERJ6GEYJ103	M.RESISTOR CH 1/10W 10K	1	
R5		ERJ6GEYJ105	M.RESISTOR CH 1/10W 1M	1	
R6		ERJ6GEYJ103	M.RESISTOR CH 1/10W 10K	1	
R6		ERJ6GEYJ562	M.RESISTOR CH 1/10W 5.6K	1	
R7		ERJ6GEYJ155	M.RESISTOR CH 1/10W 1.5M	1	
R7		ERJ6GEYJ562	M.RESISTOR CH 1/10W 5.6K	1	
R8		ERJ6GEYJ103	M.RESISTOR CH 1/10W 10K	1	
R9		ERJ6GEYJ125	M.RESISTOR CH 1/10W 1.2M	1	
R10		ERJ6GEYJ563	M.RESISTOR CH 1/10W 56K	1	
R10		ERJ6GEYJ823	M.RESISTOR CH 1/10W 82K	1	
R11,12		VRE0034E102	M.RESISTOR CH 1/10W 1K	2	
R13		ERJ6GEYJ123	M.RESISTOR CH 1/10W 12K	1	
R14		ERJ6GEYJ823	M.RESISTOR CH 1/10W 82K	1	
R15		ERJ6GEYJ393	M.RESISTOR CH 1/10W 39K	1	
R16		ERJ6GEYJ564	M.RESISTOR CH 1/10W 560K	1	
R17		ERJ6GEYJ822	M.RESISTOR CH 1/10W 8.2K	1	
R18,19		ERJ6GEYJ183	M.RESISTOR CH 1/10W 18K	2	
R20		ERJ6GEYJ822	M.RESISTOR CH 1/10W 8.2K	1	
R21		ERJ6GEYJ104	M.RESISTOR CH 1/10W 100K	1	
R22		ERJ6GEYJ472	M.RESISTOR CH 1/10W 4.7K	1	
R23		ERJ6GEYJ103	M.RESISTOR CH 1/10W 10K	1	
R24		ERJ6GEYJ563	M.RESISTOR CH 1/10W 56K	1	
R25		ERJ6GEYJ102	M.RESISTOR CH 1/10W 1K	1	
R27		ERJ6GEYJ103	M.RESISTOR CH 1/10W 10K	1	
R28-31		ERJ6GEYJ563	M.RESISTOR CH 1/10W 56K	4	
R34,35		ERJ6GEYJ103	M.RESISTOR CH 1/10W 10K	2	
R36		ERJ6GEYJ562	M.RESISTOR CH 1/10W 5.6K	1	
R37-44		ERJ6GEYJ563	M.RESISTOR CH 1/10W 56K	8	
R45		ERJ6GEYJ104	M.RESISTOR CH 1/10W 100K	1	
R50		ERJ6GEYJ563	M.RESISTOR CH 1/10W 56K	1	
R51		ERJ6GEYJ103	M.RESISTOR CH 1/10W 10K	1	
R52		ERJ6GEYJ474	M.RESISTOR CH 1/10W 470K	1	
R53		ERJ6GEYJ563	M.RESISTOR CH 1/10W 56K	1	
R54		ERJ6GEYJ103	M.RESISTOR CH 1/10W 10K	1	
R55		ERJ6GEYJ474	M.RESISTOR CH 1/10W 470K	1	
R56		ERJ6GEYJ563	M.RESISTOR CH 1/10W 56K	1	
R57		ERJ6GEYJ103	M.RESISTOR CH 1/10W 10K	1	
R58		ERJ6GEYJ474	M.RESISTOR CH 1/10W 470K	1	
R59		ERJ6GEYJ103	M.RESISTOR CH 1/10W 10K	1	
R60		ERJ6GEYJ102	M.RESISTOR CH 1/10W 1K	1	
R61		ERJ6GEYJ223	M.RESISTOR CH 1/10W 22K	1	
R62		ERJ6GEYJ103	M.RESISTOR CH 1/10W 10K	1	
R69,70		ERJ6GEYJ102	M.RESISTOR CH 1/10W 1K	2	
R101		ERJ6GEYJ103	M.RESISTOR CH 1/10W 10K	1	
R102		ERJ6GEYJ184	M.RESISTOR CH 1/10W 180K	1	
R103		ERJ6GEYJ102	M.RESISTOR CH 1/10W 1K	1	
R104		ERJ6GEYJ474	M.RESISTOR CH 1/10W 470K	1	
R105-07		ERJ6GEYJ103	M.RESISTOR CH 1/10W 10K	3	
R108		ERJ6GEYJ184	M.RESISTOR CH 1/10W 180K	1	
R109		ERJ6GEYJ102	M.RESISTOR CH 1/10W 1K	1	
R110		ERJ6GEYJ474	M.RESISTOR CH 1/10W 470K	1	
R111		ERJ6GEYJ103	M.RESISTOR CH 1/10W 10K	1	
R112		ERJ6GEYJ153	M.RESISTOR CH 1/10W 15K	1	
R113		ERJ6GEYJ562	M.RESISTOR CH 1/10W 5.6K	1	
R114		ERJ6GEYJ224	M.RESISTOR CH 1/10W 220K	1	
R115		ERJ6GEYJ682	M.RESISTOR CH 1/10W 6.8K	1	
R116		ERJ6GEYJ153	M.RESISTOR CH 1/10W 15K	1	
R117		ERJ6GEYJ104	M.RESISTOR CH 1/10W 100K	1	
R118		ERJ6GEYJ103	M.RESISTOR CH 1/10W 10K	1	
R119		ERJ6GEYJ153	M.RESISTOR CH 1/10W 15K	1	
R120		ERJ6GEYJ152	M.RESISTOR CH 1/10W 1.5K	1	
R121,22		ERJ6GEYJ103	M.RESISTOR CH 1/10W 10K	2	
R123		ERJ6GEYJ105	M.RESISTOR CH 1/10W 1M	1	
R124		ERJ6GEYJ272	M.RESISTOR CH 1/10W 2.7K	1	
R125		ERJ6GEYJ103	M.RESISTOR CH 1/10W 10K	1	
R126-32		ERJ6GEYJ563	M.RESISTOR CH 1/10W 56K	7	
R133,34		ERJ6GEYJ103	M.RESISTOR CH 1/10W 10K	2	
R135,36		ERJ6GEYJ563	M.RESISTOR CH 1/10W 56K	2	
R137		ERJ6GEYJ103	M.RESISTOR CH 1/10W 10K	1	
R138		ERJ6GEYJ563	M.RESISTOR CH 1/10W 56K	1	
R139		ERJ6GEYJ224	M.RESISTOR CH 1/10W 220K	1	
R140		ERJ6GEYJ563	M.RESISTOR CH 1/10W 56K	1	
R141		ERJ6GEYJ224	M.RESISTOR CH 1/10W 220K	1	
R142		ERJ6GEYJ563	M.RESISTOR CH 1/10W 56K	1	

Refer to the P.C.BOARDS LIST, page 6-1-1, before using this page.

Ref.No.		Part No.	Part Name & Description	Pcs	Remarks
R143		ERJ6GEYJ223	M.RESISTOR CH 1/10W 22K	1	
R144		ERJ6GEYJ103	M.RESISTOR CH 1/10W 10K	1	
R145		ERJ6GEYJ563	M.RESISTOR CH 1/10W 56K	1	
R146		ERJ6GEYJ562	M.RESISTOR CH 1/10W 5.6K	1	
R147,48		ERJ6GEYJ273	M.RESISTOR CH 1/10W 27K	2	
R150		ERJ6GEYJ183	M.RESISTOR CH 1/10W 18K	1	
R151		ERJ6GEYJ103	M.RESISTOR CH 1/10W 10K	1	
R152		ERJ6GEYJ824	M.RESISTOR CH 1/10W 820K	1	
R153		ERJ6GEYJ562	M.RESISTOR CH 1/10W 5.6K	1	
R154-56		ERJ6GEYJ393	M.RESISTOR CH 1/10W 39K	3	
R157		ERJ6GEYJ103	M.RESISTOR CH 1/10W 10K	1	
R158		ERJ6GEYJ183	M.RESISTOR CH 1/10W 18K	1	
R159		ERJ6GEYJ682	M.RESISTOR CH 1/10W 6.8K	1	
R160		ERJ6GEYJ183	M.RESISTOR CH 1/10W 18K	1	
R161		ERJ6GEYJ103	M.RESISTOR CH 1/10W 10K	1	
R162		ERJ6GEYJ563	M.RESISTOR CH 1/10W 56K	1	
R163		ERJ6GEYJ103	M.RESISTOR CH 1/10W 10K	1	
R164		ERJ6GEYJ562	M.RESISTOR CH 1/10W 5.6K	1	
R165		ERJ6GEYJ333	M.RESISTOR CH 1/10W 33K	1	
R166		ERJ6GEYJ222	M.RESISTOR CH 1/10W 2.2K	1	
R167		ERJ6GEYJ183	M.RESISTOR CH 1/10W 18K	1	
R168		ERJ6GEYJ273	M.RESISTOR CH 1/10W 27K	1	
R169		ERJ6GEYJ103	M.RESISTOR CH 1/10W 10K	1	
R170,71		ERJ6GEYJ563	M.RESISTOR CH 1/10W 56K	2	
R172		ERJ6GEYJ102	M.RESISTOR CH 1/10W 1K	1	
R181,82		ERJ6GEYJ563	M.RESISTOR CH 1/10W 56K	2	
R183		ERJ6GEYJ102	M.RESISTOR CH 1/10W 1K	1	
R184		ERJ6GEYJ563	M.RESISTOR CH 1/10W 56K	1	
R185		ERJ6GEYJ104	M.RESISTOR CH 1/10W 100K	1	
R186		ERJ6GEYJ102	M.RESISTOR CH 1/10W 1K	1	
R187,88		ERJ6GEYJ822	M.RESISTOR CH 1/10W 8.2K	2	
R189		ERJ6GEYJ561	M.RESISTOR CH 1/10W 560	1	
R190		ERJ6GEYJ472	M.RESISTOR CH 1/10W 4.7K	1	
R191,92		ERJ6GEYJ563	M.RESISTOR CH 1/10W 56K	2	
R193,94		ERJ6GEYJ273	M.RESISTOR CH 1/10W 27K	2	
R195		ERJ6GEYJ562	M.RESISTOR CH 1/10W 5.6K	1	
R196		ERJ6GEYJ153	M.RESISTOR CH 1/10W 15K	1	
R197		ERJ6GEYJ332	M.RESISTOR CH 1/10W 3.3K	1	
R204		ERJ6GEYJ562	M.RESISTOR CH 1/10W 5.6K	1	
R205		ERJ6GEYJ101	M.RESISTOR CH 1/10W 100	1	
R206		ERJ6GEYJ104	M.RESISTOR CH 1/10W 100K	1	
R207-09		ERJ6GEYJ102	M.RESISTOR CH 1/10W 1K	3	
R210		ERJ6GEYJ153	M.RESISTOR CH 1/10W 15K	1	
R211		ERJ6GEYJ183	M.RESISTOR CH 1/10W 18K	1	
R212		ERJ6GEYJ683	M.RESISTOR CH 1/10W 68K	1	
R213-15		ERJ6GEYJ563	M.RESISTOR CH 1/10W 56K	3	
R216		ERJ6GEYJ105	M.RESISTOR CH 1/10W 1M	1	
R222-27		ERJ6GEYJ563	M.RESISTOR CH 1/10W 56K	6	
R228		ERJ6GEYJ104	M.RESISTOR CH 1/10W 100K	1	
R229		ERJ6GEYJ223	M.RESISTOR CH 1/10W 22K	1	
R230		ERJ6GEYJ563	M.RESISTOR CH 1/10W 56K	1	
R231		ERJ6GEYJ104	M.RESISTOR CH 1/10W 100K	1	
R232		VRE0034E272	M.RESISTOR CH 1/10W 2.7K	1	
R233		VRE0034E104	M.RESISTOR CH 1/10W 100K	1	
R234		VRE0034E272	M.RESISTOR CH 1/10W 2.7K	1	
R235		VRE0034E104	M.RESISTOR CH 1/10W 100K	1	
R236		ERJ6GEYJ563	M.RESISTOR CH 1/10W 56K	1	
R237		ERJ6GEYJ824	M.RESISTOR CH 1/10W 820K	1	
R238		ERJ6GEYJ102	M.RESISTOR CH 1/10W 1K	1	
R239		ERJ6GEYJ103	M.RESISTOR CH 1/10W 10K	1	
R240		ERJ6GEYJ222	M.RESISTOR CH 1/10W 2.2K	1	
R241		ERJ6GEYJ104	M.RESISTOR CH 1/10W 100K	1	
R242		ERJ6GEYJ334	M.RESISTOR CH 1/10W 330K	1	
R243		ERJ6GEYJ101	M.RESISTOR CH 1/10W 100	1	
R244,45		ERJ6GEYJ103	M.RESISTOR CH 1/10W 10K	2	
R246		ERJ6GEYJ102	M.RESISTOR CH 1/10W 1K	1	
R247		ERJ6GEYJ103	M.RESISTOR CH 1/10W 10K	1	
R248		ERJ6GEYJ562	M.RESISTOR CH 1/10W 5.6K	1	
R249		ERJ6GEYJ392	M.RESISTOR CH 1/10W 3.9K	1	
R250		ERJ6GEYJ184	M.RESISTOR CH 1/10W 180K	1	
R251		ERJ6GEYJ224	M.RESISTOR CH 1/10W 220K	1	
R252		ERJ6GEYJ153	M.RESISTOR CH 1/10W 15K	1	
R253		ERJ6GEYJ474	M.RESISTOR CH 1/10W 470K	1	
R254-58		ERJ6GEYJ103	M.RESISTOR CH 1/10W 10K	5	
R259		ERJ6GEYJ223	M.RESISTOR CH 1/10W 22K	1	

Ref.No.		Part No.	Part Name & Description	Pcs	Remarks
R260		ERJ6GEYJ393	M.RESISTOR CH 1/10W 39K	1	
R261		ERJ6GEYJ823	M.RESISTOR CH 1/10W 82K	1	
R262		ERJ6GEYJ123	M.RESISTOR CH 1/10W 12K	1	
R263		ERJ6GEYJ183	M.RESISTOR CH 1/10W 18K	1	
R264		ERJ6GEYJ333	M.RESISTOR CH 1/10W 33K	1	
R265		ERJ6GEYJ683	M.RESISTOR CH 1/10W 68K	1	
R266-69		ERJ6GEYJ563	M.RESISTOR CH 1/10W 56K	4	
R270		ERJ6GEYJ562	M.RESISTOR CH 1/10W 5.6K	1	
R271		ERJ6GEYJ103	M.RESISTOR CH 1/10W 10K	1	
R273		ERJ6GEYJ393	M.RESISTOR CH 1/10W 39K	1	
R274		ERJ6GEYJ103	M.RESISTOR CH 1/10W 10K	1	
R275		ERJ6GEYJ563	M.RESISTOR CH 1/10W 56K	1	
R276,77		VRE0034E102	M.RESISTOR CH 1/10W 1K	2	
R278		ERJ6GEYJ103	M.RESISTOR CH 1/10W 10K	1	
R279-82		ERJ6GEYJ563	M.RESISTOR CH 1/10W 56K	4	
R283		ERJ6GEYJ103	M.RESISTOR CH 1/10W 10K	1	
R284		ERJ6GEYJ272	M.RESISTOR CH 1/10W 2.7K	1	
R285		ERJ6GEYJ122	M.RESISTOR CH 1/10W 1.2K	1	
R286		ERJ6GEYJ472	M.RESISTOR CH 1/10W 4.7K	1	
R301		ERJ6GEYJ563	M.RESISTOR CH 1/10W 56K	1	
R302,03		ERJ6GEYJ103	M.RESISTOR CH 1/10W 10K	2	
R304		ERJ6GEYJ563	M.RESISTOR CH 1/10W 56K	1	
R305		ERJ6GEYJ104	M.RESISTOR CH 1/10W 100K	1	
R306		ERJ6GEYJ683	M.RESISTOR CH 1/10W 68K	1	
R307		ERJ6GEYJ223	M.RESISTOR CH 1/10W 22K	1	
R308		ERJ6GEYJ103	M.RESISTOR CH 1/10W 10K	1	
R309		ERJ6GEYJ472	M.RESISTOR CH 1/10W 4.7K	1	
R310		ERJ6GEYJ822	M.RESISTOR CH 1/10W 8.2K	1	
R311		ERJ6GEYJ392	M.RESISTOR CH 1/10W 3.9K	1	
R312		ERJ6GEYJ153	M.RESISTOR CH 1/10W 15K	1	
R313		ERJ6GEYJ332	M.RESISTOR CH 1/10W 3.3K	1	
R314		ERJ6GEYJ151	M.RESISTOR CH 1/10W 150	1	
R315,16		ERJ6GEYJ103	M.RESISTOR CH 1/10W 10K	2	
R317		ERJ6GEYJ683	M.RESISTOR CH 1/10W 68K	1	
R318		ERJ6GEYJ103	M.RESISTOR CH 1/10W 10K	1	
R319		ERJ6GEYJ273	M.RESISTOR CH 1/10W 27K	1	
R320		ERJ6GEYJ104	M.RESISTOR CH 1/10W 100K	1	
R321		ERJ6GEYJ223	M.RESISTOR CH 1/10W 22K	1	
R322		ERJ6GEYJ124	M.RESISTOR CH 1/10W 120K	1	
R325,26		VRE0034E332	M.RESISTOR CH 1/10W 3.3K	2	
R327		ERJ6GEYJ223	M.RESISTOR CH 1/10W 22K	1	
R328		ERJ6GEYJ104	M.RESISTOR CH 1/10W 100K	1	
R329		ERJ6GEYJ393	M.RESISTOR CH 1/10W 39K	1	
R330		ERJ6GEYJ334	M.RESISTOR CH 1/10W 330K	1	
R331		ERJ6GEYJ474	M.RESISTOR CH 1/10W 470K	1	
R332,33		ERJ6GEYJ104	M.RESISTOR CH 1/10W 100K	2	
R334		ERJ6GEYJ105	M.RESISTOR CH 1/10W 1M	1	
R335		ERJ6GEYJ684	M.RESISTOR CH 1/10W 680K	1	
R336		ERJ6GEYJ473	M.RESISTOR CH 1/10W 47K	1	
R337,38		ERJ6GEYJ103	M.RESISTOR CH 1/10W 10K	2	
R339,40		VRE0034E332	M.RESISTOR CH 1/10W 3.3K	2	
R341		ERJ6GEYJ223	M.RESISTOR CH 1/10W 22K	1	
R342		ERJ6GEYJ104	M.RESISTOR CH 1/10W 100K	1	
R343		ERJ6GEYJ473	M.RESISTOR CH 1/10W 47K	1	
R344		ERJ6GEYJ334	M.RESISTOR CH 1/10W 330K	1	
R345		ERJ6GEYJ474	M.RESISTOR CH 1/10W 470K	1	
R346		ERJ6GEYJ104	M.RESISTOR CH 1/10W 100K	1	
R347		ERJ6GEYJ105	M.RESISTOR CH 1/10W 1M	1	
R348		ERJ6GEYJ684	M.RESISTOR CH 1/10W 680K	1	
R349,50		ERJ6GEYJ103	M.RESISTOR CH 1/10W 10K	2	
R351		ERJ6GEYJ472	M.RESISTOR CH 1/10W 4.7K	1	
R352-55		ERJ6GEYJ103	M.RESISTOR CH 1/10W 10K	4	
R356		ERJ6GEYJ222	M.RESISTOR CH 1/10W 2.2K	1	
R357		ERJ6GEYJ223	M.RESISTOR CH 1/10W 22K	1	
R358		ERJ6GEYJ104	M.RESISTOR CH 1/10W 100K	1	
R359-63		ERJ6GEYJ103	M.RESISTOR CH 1/10W 10K	5	
R365		ERJ6GEYJ104	M.RESISTOR CH 1/10W 100K	1	
R366		ERJ6GEYJ103	M.RESISTOR CH 1/10W 10K	1	
R367,68		ERJ6GEYJ563	M.RESISTOR CH 1/10W 56K	2	
R369		ERJ6GEYJ104	M.RESISTOR CH 1/10W 100K	1	
R370-74		ERJ6GEYJ103	M.RESISTOR CH 1/10W 10K	5	
R376		ERJ6GEYJ104	M.RESISTOR CH 1/10W 100K	1	
R378,79		ERJ6GEYJ563	M.RESISTOR CH 1/10W 56K	2	
R380		ERJ6GEYJ103	M.RESISTOR CH 1/10W 10K	1	
R381		ERJ6GEYJ473	M.RESISTOR CH 1/10W 47K	1	

Refer to the P.C.BOARDS LIST, page 6-1-1, before using this page.

Ref.No.		Part No.	Part Name & Description	Pcs	Remarks
R382		ERJ6GEYJ683	M.RESISTOR CH 1/10W 68K	1	
R383		ERJ6GEYJ152	M.RESISTOR CH 1/10W 1.5K	1	
R386		ERJ6GEYJ182	M.RESISTOR CH 1/10W 1.8K	1	
R388		ERJ6GEYJ223	M.RESISTOR CH 1/10W 22K	1	
R389		ERJ6GEYJ153	M.RESISTOR CH 1/10W 15K	1	
R390		ERJ6GEYJ223	M.RESISTOR CH 1/10W 22K	1	
R391		ERJ6GEYJ153	M.RESISTOR CH 1/10W 15K	1	
R392,93		ERJ6GEYJ103	M.RESISTOR CH 1/10W 10K	2	
R394,95		VRE0034E102	M.RESISTOR CH 1/10W 1K	2	
R396,97		VRE0034E472	M.RESISTOR CH 1/10W 4.7K	2	
R398		ERJ6GEYJ334	M.RESISTOR CH 1/10W 330K	1	
R399		ERJ6GEYJ333	M.RESISTOR CH 1/10W 33K	1	
R405		ERJ6GEYJ333	M.RESISTOR CH 1/10W 33K	1	
R406		ERJ6GEYJ103	M.RESISTOR CH 1/10W 10K	1	
R407		ERJ6GEYJ333	M.RESISTOR CH 1/10W 33K	1	
R408,09		ERJ6GEYJ103	M.RESISTOR CH 1/10W 10K	2	
R410		ERJ6GEYJ183	M.RESISTOR CH 1/10W 18K	1	
R421		ERJ6GEYJ221	M.RESISTOR CH 1/10W 220	1	
R423		ERJ6GEYJ221	M.RESISTOR CH 1/10W 220	1	
R424		ERJ6GEYJ222	M.RESISTOR CH 1/10W 2.2K	1	
R425		ERJ6GEYJ563	M.RESISTOR CH 1/10W 56K	1	
R427		ERJ6GEYJ333	M.RESISTOR CH 1/10W 33K	1	
R428		ERJ6GEYJ223	M.RESISTOR CH 1/10W 22K	1	
R431		ERJ6GEYJ563	M.RESISTOR CH 1/10W 56K	1	
R432,33		ERJ6GEYJ393	M.RESISTOR CH 1/10W 39K	2	
R434		ERJ6GEYJ331	M.RESISTOR CH 1/10W 330	1	
R435		ERJ6GEYJ103	M.RESISTOR CH 1/10W 10K	1	
R437		ERJ6GEYJ684	M.RESISTOR CH 1/10W 680K	1	
R440		ERJ6GEYJ562	M.RESISTOR CH 1/10W 5.6K	1	
R441,42		ERJ6GEYJ105	M.RESISTOR CH 1/10W 1M	2	
R443		ERJ6GEYJ223	M.RESISTOR CH 1/10W 22K	1	
R463		ERDS2TJ331	C.RESISTOR 1/4W 330	1	
R469		ERDS2TJ564	C.RESISTOR 1/4W 560K	1	
R470		ERDS2TJ394	C.RESISTOR 1/4W 390K	1	
R501		ERJ6GEYJ102	M.RESISTOR CH 1/10W 1K	1	
R502		ERJ6GEYJ103	M.RESISTOR CH 1/10W 10K	1	
R503		ERJ6GEYJ102	M.RESISTOR CH 1/10W 1K	1	
R504-07		ERJ6GEYJ821	M.RESISTOR CH 1/10W 820	4	
R508		ERJ6GEYJ473	M.RESISTOR CH 1/10W 47K	1	
R509-12		ERJ6GEYJ391	M.RESISTOR CH 1/10W 390	4	
R513		ERJ6GEYJ103	M.RESISTOR CH 1/10W 10K	1	
R514		ERJ6GEYJ224	M.RESISTOR CH 1/10W 220K	1	
R515		ERJ6GEYJ273	M.RESISTOR CH 1/10W 27K	1	
R516		ERJ6GEYJ103	M.RESISTOR CH 1/10W 10K	1	
R517		ERJ6GEYJ272	M.RESISTOR CH 1/10W 2.7K	1	
R518		ERJ6GEYJ104	M.RESISTOR CH 1/10W 100K	1	
R519		ERJ6GEYJ392	M.RESISTOR CH 1/10W 3.9K	1	
R520		ERJ6GEYJ333	M.RESISTOR CH 1/10W 33K	1	
R521,22		ERJ6GEYJ224	M.RESISTOR CH 1/10W 220K	2	
R523		ERX12SJR47	M.RESISTOR 1/2W 0.47	1	
R524		ERJ6GEYJ273	M.RESISTOR CH 1/10W 27K	1	
R525		ERJ6GEYJ272	M.RESISTOR CH 1/10W 2.7K	1	
R526		ERJ6GEYJ103	M.RESISTOR CH 1/10W 10K	1	
R527		ERJ6GEYJ104	M.RESISTOR CH 1/10W 100K	1	
R528		ERJ6GEYJ224	M.RESISTOR CH 1/10W 220K	1	
R529		ERJ6GEYJ392	M.RESISTOR CH 1/10W 3.9K	1	
R530		ERJ6GEYJ223	M.RESISTOR CH 1/10W 22K	1	
R531		ERJ6GEYJ224	M.RESISTOR CH 1/10W 220K	1	
R532		ERX12SJR68	M.RESISTOR 1/2W 0.68	1	
R533		ERJ6GEYJ224	M.RESISTOR CH 1/10W 220K	1	
R534		ERJ6GEYJ273	M.RESISTOR CH 1/10W 27K	1	
R535		ERJ6GEYJ103	M.RESISTOR CH 1/10W 10K	1	
R536		ERJ6GEYJ104	M.RESISTOR CH 1/10W 100K	1	
R537		ERX12SJR47	M.RESISTOR 1/2W 0.47	1	
R538-40		ERJ6GEYJ224	M.RESISTOR CH 1/10W 220K	3	
R541		ERJ6GEYJ272	M.RESISTOR CH 1/10W 2.7K	1	
R542		ERJ6GEYJ223	M.RESISTOR CH 1/10W 22K	1	
R543		ERJ6GEYJ273	M.RESISTOR CH 1/10W 27K	1	
R544		ERJ6GEYJ104	M.RESISTOR CH 1/10W 100K	1	
R545		ERJ6GEYJ103	M.RESISTOR CH 1/10W 10K	1	
R546		ERX12SJR47	M.RESISTOR 1/2W 0.47	1	
R547-49		ERJ6GEYJ224	M.RESISTOR CH 1/10W 220K	3	
R550		ERJ6GEYJ272	M.RESISTOR CH 1/10W 2.7K	1	
R551		ERJ6GEYJ223	M.RESISTOR CH 1/10W 22K	1	
R552		ERX1ANJ6R8	M.RESISTOR 1W 6.8	1	

Ref.No.		Part No.	Part Name & Description	Pcs	Remarks
R553		ERJ6GEY0R00	M.RESISTOR CH 1/10W 0	1	
R554		ERJ6GEYJ272	M.RESISTOR CH 1/10W 2.7K	1	
R555-57		ERJ6GEY0R00	M.RESISTOR CH 1/10W 0	3	
SW1,W2		VSR0032	VOLTAGE SELECT SWITCH	2	
TP3-P7		VJR0582	PACK PIN	5	
TP13		VJR0582	PACK PIN	1	
TP15-17		VJR0582	PACK PIN	3	
TP19,20		VJR0582	PACK PIN	2	
TP102-05		VJR0582	PACK PIN	4	
TP108-18		VJR0582	PACK PIN	11	
TP201,02		VJR0582	PACK PIN	2	
TP302-04		VJR0582	PACK PIN	3	
TP306		VJR0582	PACK PIN	1	
TP309-12		VJR0582	PACK PIN	4	
TPG1-G3		VJR0582	PACK PIN	3	
VC101		ECV1ZW30X53	V.CAPACITOR 30P	1	
VR1		VRV0109B503	V.RESISTOR 50K	1	
VR3		VRV0109B203	V.RESISTOR 20K	1	
VR101		VRV0109B203	V.RESISTOR 20K	1	
VR102		VRV0109B103	V.RESISTOR 10K	1	
VR103		VRV0109B203	V.RESISTOR 20K	1	
VR104		VRV0109B502	V.RESISTOR 5K	1	
VR105		VRV0109B104	V.RESISTOR 100K	1	
VR301		VRV0109B502	V.RESISTOR 5K	1	
VR302,03		VRV0109B202	V.RESISTOR 2K	2	
VR304-07		VRV0109B503	V.RESISTOR 50K	4	
VR308		VRV0109B202	V.RESISTOR 2K	1	
X101		VSX0081	CRYSTAL OSCILLATOR	1	
X501		VSX0136	CRYSTAL OSCILLATOR	1	
			MISCELLANEOUS		
		VJR0421	PIN	4	
		VML2143	CARD PULLER	1	
		VML2144	CARD PULLER	1	
		VMS4174	PIN	6	
		VMZ1091	BARRIER	1	
		VMZ1547	BARRIER	1	
		VSC2286	SHIELD CASE	1	
		VSC3056	SHIELD CASE	1	
		VXA3966	P.C.B. SHIELD PLATE	1	
		XNG26E	NUT	4	
		XYNV3+K6FR	SCREW	6	
		XYN26+C12	SCREW	4	

Refer to the P.C.BOARDS LIST, page 6-1-1, before using this page.

Ref.No.		Part No.	Part Name & Description	Pcs	Remarks
	■	VEP82061D	P.C.BOARD W/COMPONENT		FOR AU-63-P
			W5 SERVO		
			CAPACITORS		
C1		ECQM1H273JF	P.CAPACITOR 50V 0.027U	1	
C1,C2		ECUM1H103ZFN	C.CAPACITOR CH 50V 0.01U	2	
C2		ECUM1H152JN	C.CAPACITOR CH 50V 1500P	1	
C3,C4		ECUM1H101JCN	C.CAPACITOR CH 50V 100P	2	
C5		ECEA1CU100	E.CAPACITOR 16V 10U	1	
C6		ECEA0JU101	E.CAPACITOR 6.3V 100U	1	
C7		ECEA1AU470	E.CAPACITOR 10V 47U	1	
C8		ECUM1H103ZFN	C.CAPACITOR CH 50V 0.01U	1	
C9		ECQM1H154JF	P.CAPACITOR 50V 0.15U	1	
C10		ECEA1HN2R2S	E.CAPACITOR 50V 2.2U	1	
C11		ECQM1H223JF	P.CAPACITOR 50V 0.022U	1	
C13		ECQP1H822JZ	P.CAPACITOR 50V 8200P	1	
C14		ECQM1H682JV	P.CAPACITOR 50V 6800P	1	
C15,16		ECUM1H103ZFN	C.CAPACITOR CH 50V 0.01U	2	
C17		ECQM1H394JV	P.CAPACITOR 50V 0.39U	1	
C18		ECEA1HU4R7	E.CAPACITOR 50V 4.7U	1	
C19		ECEA1AU470	E.CAPACITOR 10V 47U	1	
C20,21		ECUM1H103ZFN	C.CAPACITOR CH 50V 0.01U	2	
C22		ECEA1HU2R2	E.CAPACITOR 50V 2.2U	1	
C23,24		ECUM1E104ZFN	C.CAPACITOR CH 25V 0.1U	2	
C25		ECUM1H103ZFN	C.CAPACITOR CH 50V 0.01U	1	
C26		ECEA1AU470	E.CAPACITOR 10V 47U	1	
C27		ECUM1H103ZFN	C.CAPACITOR CH 50V 0.01U	1	
C28		ECEA1AU470	E.CAPACITOR 10V 47U	1	
C29		ECEA1AU330	E.CAPACITOR 10V 33U	1	
C30		ECUM1H103ZFN	C.CAPACITOR CH 50V 0.01U	1	
C31		ECEA1AU330	E.CAPACITOR 10V 33U	1	
C32		ECEA1AU470	E.CAPACITOR 10V 47U	1	
C33		ECUM1H103ZFN	C.CAPACITOR CH 50V 0.01U	1	
C34		ECEA1AU470	E.CAPACITOR 10V 47U	1	
C39		ECUM1H331JCN	C.CAPACITOR CH 50V 330P	1	
C40-42		ECUM1H103ZFN	C.CAPACITOR CH 50V 0.01U	3	
C43		ECUM1H101JCN	C.CAPACITOR CH 50V 100P	1	
C46		ECEA1CU470	E.CAPACITOR 16V 47U	1	
C47,48		ECUM1E104ZFN	C.CAPACITOR CH 25V 0.1U	2	
C101		ECQM1H104JF	P.CAPACITOR 50V 0.1U	1	
C102		ECUM1H151JCN	C.CAPACITOR CH 50V 150P	1	
C103		ECEA1CU470	E.CAPACITOR 16V 47U	1	
C104		ECEA1HU2R2	E.CAPACITOR 50V 2.2U	1	
C105		ECEA1CU101	E.CAPACITOR 16V 100U	1	
C106		ECQM1H104JF	P.CAPACITOR 50V 0.1U	1	
C107		ECUM1H151JCN	C.CAPACITOR CH 50V 150P	1	
C108		ECUM1H102JCN	C.CAPACITOR CH 50V 1000P	1	
C109		ECUM1H221JCN	C.CAPACITOR CH 50V 220P	1	
C110		ECQM1H103JF	P.CAPACITOR 50V 0.01U	1	
C111		ECEA1HU010	E.CAPACITOR 50V 1U	1	
C112		ECQM1H154JF	P.CAPACITOR 50V 0.15U	1	
C113		ECEA1HU010	E.CAPACITOR 50V 1U	1	
C114		ECEA1CU470	E.CAPACITOR 16V 47U	1	
C115		ECUM1H103ZFN	C.CAPACITOR CH 50V 0.01U	1	
C116		ECEA1CU470	E.CAPACITOR 16V 47U	1	
C117		ECUM1H103ZFN	C.CAPACITOR CH 50V 0.01U	1	
C118		ECEA1CU470	E.CAPACITOR 16V 47U	1	
C119		ECUM1H103ZFN	C.CAPACITOR CH 50V 0.01U	1	
C120		ECEA1CU470	E.CAPACITOR 16V 47U	1	
C121		ECUM1H103ZFN	C.CAPACITOR CH 50V 0.01U	1	
C122		ECEA1CU470	E.CAPACITOR 16V 47U	1	
C123		ECUM1H330JCN	C.CAPACITOR CH 50V 33P	1	
C124		ECUM1H103ZFN	C.CAPACITOR CH 50V 0.01U	1	
C125		ECEA1CU470	E.CAPACITOR 16V 47U	1	
C126		ECQM1H562JF	P.CAPACITOR 50V 5600P	1	
C127		ECQM1H393JF	P.CAPACITOR 50V 0.039U	1	
C128		ECQM1H104JF	P.CAPACITOR 50V 0.1U	1	
C129		ECEA1OM22	E.CAPACITOR 10V 22U	1	
C130		ECEA1HU010	E.CAPACITOR 50V 1U	1	
C131		ECEA1EN220S	E.CAPACITOR 25V 22U	1	
C132		ECQM1H103JF	P.CAPACITOR 50V 0.01U	1	
C133-36		ECUM1H103ZFN	C.CAPACITOR CH 50V 0.01U	4	
C137		ECEA1CU101	E.CAPACITOR 16V 100U	1	
C139		ECQM1H822JF	P.CAPACITOR 50V 8200P	1	
C140		ECUM1H102JCN	C.CAPACITOR CH 50V 1000P	1	
C141		ECEA1HN010S	E.CAPACITOR 50V 1U	1	
C143		ECEA1CU470	E.CAPACITOR 16V 47U	1	
C145		ECEA1AU470	E.CAPACITOR 10V 47U	1	
C146		ECUM1H103ZFN	C.CAPACITOR CH 50V 0.01U	1	
C147		ECEA1HUR47	E.CAPACITOR 50V 0.47U	1	
C148		ECEA1CU470	E.CAPACITOR 16V 47U	1	
C149,50		ECUM1H103ZFN	C.CAPACITOR CH 50V 0.01U	2	
C151		ECEA1HN010S	E.CAPACITOR 50V 1U	1	
C152,53		ECUM1H103ZFN	C.CAPACITOR CH 50V 0.01U	2	
C154		ECUM1H152KBN	C.CAPACITOR CH 50V 1500P	1	
C155		ECEA1HN100S	E.CAPACITOR 50V 10U	1	
C156		ECEA1HUR47	E.CAPACITOR 50V 0.47U	1	
C157,58		ECUM1H103ZFN	C.CAPACITOR CH 50V 0.01U	2	
C159		ECQM1H104JF	P.CAPACITOR 50V 0.1U	1	
C160		ECUM1H103ZFN	C.CAPACITOR CH 50V 0.01U	1	
C161		ECQM1H104JF	P.CAPACITOR 50V 0.1U	1	
C162,63		ECQM1H103JF	P.CAPACITOR 50V 0.01U	2	
C164		ECEA1HU4R7	E.CAPACITOR 50V 4.7U	1	
C165-67		ECUM1H103ZFN	C.CAPACITOR CH 50V 0.01U	3	
C168		ECEA1EU100	E.CAPACITOR 25V 10U	1	
C169		ECUM1H103KBN	C.CAPACITOR CH 50V 0.01U	1	
C170		ECUM1H471JCN	C.CAPACITOR CH 50V 470P	1	
C171,72		ECUM1H103ZFN	C.CAPACITOR CH 50V 0.01U	2	
C173		ECUM1H101JCN	C.CAPACITOR CH 50V 100P	1	
C174		ECUM1H103ZFN	C.CAPACITOR CH 50V 0.01U	1	
C175		ECQM1H184JF	P.CAPACITOR 50V 0.18U	1	
C176		ECEA1CU470	E.CAPACITOR 16V 47U	1	
C177		ECQM1H222JF	P.CAPACITOR 50V 2200P	1	
C301		ECEA1AU330	E.CAPACITOR 10V 33U	1	
C302		ECUM1H103ZFN	C.CAPACITOR CH 50V 0.01U	1	
C303		ECQM1H562JF	P.CAPACITOR 50V 5600P	1	
C304		ECQM1H392JF	P.CAPACITOR 50V 3900P	1	
C305		ECUM1H103ZFN	C.CAPACITOR CH 50V 0.01U	1	
C306		ECQM1H123JF	P.CAPACITOR 50V 0.012U	1	
C307		ECEA1CN470S	E.CAPACITOR 16V 47U	1	
C308		ECEA0JU221	E.CAPACITOR 6.3V 220U	1	
C309		ECEA1HU2R2	E.CAPACITOR 50V 2.2U	1	
C310		ECQM1H104JF	P.CAPACITOR 50V 0.1U	1	
C311		ECUM1H153KBN	C.CAPACITOR CH 50V 0.015U	1	
C312		ECEA1HN010S	E.CAPACITOR 50V 1U	1	
C313,14		ECUM1H103ZFN	C.CAPACITOR CH 50V 0.01U	2	
C315		ECQM1H104JF	P.CAPACITOR 50V 0.1U	1	
C316		ECUM1E273KBN	C.CAPACITOR CH 25V 0.027U	1	
C317		ECEA1HN2R2S	E.CAPACITOR 50V 2.2U	1	
C318-20		ECUM1H103ZFN	C.CAPACITOR CH 50V 0.01U	3	
C321		ECEA1CU100	E.CAPACITOR 16V 10U	1	
C322		ECEA0JU470	E.CAPACITOR 6.3V 47U	1	
C323		ECUM1H103ZFN	C.CAPACITOR CH 50V 0.01U	1	
C324		ECEA0JU102	E.CAPACITOR 6.3V 1000U	1	
C325		ECUM1H103ZFN	C.CAPACITOR CH 50V 0.01U	1	
C327		ECEA1HU2R2	E.CAPACITOR 50V 2.2U	1	
C328,29		ECEA1CU100	E.CAPACITOR 16V 10U	2	
C330-36		ECUM1H103ZFN	C.CAPACITOR CH 50V 0.01U	7	
C337		ECEA1HU2R2	E.CAPACITOR 50V 2.2U	1	
C338,39		ECEA1CU100	E.CAPACITOR 16V 10U	2	
C401-03		ECUM1H103ZFN	C.CAPACITOR CH 50V 0.01U	3	
C406		ECUM1H103ZFN	C.CAPACITOR CH 50V 0.01U	1	
C408-10		ECUM1H103ZFN	C.CAPACITOR CH 50V 0.01U	3	
C454		ECUM1H103ZFN	C.CAPACITOR CH 50V 0.01U	1	
C492		ECUM1H103ZFN	C.CAPACITOR CH 50V 0.01U	1	
C495,96		ECUM1H103ZFN	C.CAPACITOR CH 50V 0.01U	2	
C501		ECUM1H103ZFN	C.CAPACITOR CH 50V 0.01U	1	
C502		ECEA1CU470	E.CAPACITOR 16V 47U	1	
C503		ECEA1ESS471	E.CAPACITOR 25V 470U	1	
C504		ECUM1E473KBN	C.CAPACITOR CH 25V 0.047U	1	
C505		ECUM1H561JCN	C.CAPACITOR CH 50V 560P	1	
C506		ECUM1H820JCN	C.CAPACITOR CH 50V 82P	1	
C507		ECUM1H561JCN	C.CAPACITOR CH 50V 560P	1	

Refer to the P.C.BOARDS LIST, page 6-1-1, before using this page.

Ref.No.		Part No.	Part Name & Description	Pcs	Remarks
C508		ECEA1HU010	E.CAPACITOR 50V 1U	1	
C509-13		ECEA1ESS101	E.CAPACITOR 25V 100U	5	
C514		ECQM1H104JF	P.CAPACITOR 50V 0.1U	1	
C515		ECEA1EU4R7	E.CAPACITOR 25V 4.7U	1	
C516-18		ECEA1HN4R7S	E.CAPACITOR 50V 4.7U	3	
C519		ECEA1HU010	E.CAPACITOR 50V 1U	1	
C520-22		ECUM1H103KBN	C.CAPACITOR CH 50V 0.01U	3	
C523		ECQM1H104JF	P.CAPACITOR 50V 0.1U	1	
C524		ECEA1EU4R7	E.CAPACITOR 25V 4.7U	1	
C525,26		ECEA1HN4R7S	E.CAPACITOR 50V 4.7U	2	
C527		ECQM1H104JF	P.CAPACITOR 50V 0.1U	1	
C528		ECEA1HU010	E.CAPACITOR 50V 1U	1	
C529-31		ECUM1H103KBN	C.CAPACITOR CH 50V 0.01U	3	
C532		ECEA1EU4R7	E.CAPACITOR 25V 4.7U	1	
C533,34		ECEA1HN4R7S	E.CAPACITOR 50V 4.7U	2	
C535		ECQM1H104JF	P.CAPACITOR 50V 0.1U	1	
C536		ECEA1HU010	E.CAPACITOR 50V 1U	1	
C537-39		ECUM1H103KBN	C.CAPACITOR CH 50V 0.01U	3	
C540		ECEA1EU4R7	E.CAPACITOR 25V 4.7U	1	
C541-43		ECEA1HN4R7S	E.CAPACITOR 50V 4.7U	3	
C544		ECQM1H104JF	P.CAPACITOR 50V 0.1U	1	
C545		ECEA1HU010	E.CAPACITOR 50V 1U	1	
C546-48		ECUM1H103KBN	C.CAPACITOR CH 50V 0.01U	3	
C549		ECEA1AU470	E.CAPACITOR 10V 47U	1	
C550		ECUM1E473KBN	C.CAPACITOR CH 25V 0.047U	1	
C551		ECEA1HN4R7S	E.CAPACITOR 50V 4.7U	1	
C552		ECQM1H104JF	P.CAPACITOR 50V 0.1U	1	
C553		ECEA1HN4R7S	E.CAPACITOR 50V 4.7U	1	
C554		ECUM1H103ZFN	C.CAPACITOR CH 50V 0.01U	1	
C555		ECEA1VU101	E.CAPACITOR 35V 100U	1	
C558-63		ECQM1H104JF	P.CAPACITOR 50V 0.1U	6	
C700		ECUM1H101JCN	C.CAPACITOR CH 50V 100P	1	
C701		ECQM1H104JF	P.CAPACITOR 50V 0.1U	1	
C702		ECUM1H103ZFN	C.CAPACITOR CH 50V 0.01U	1	
C703		ECEA1HN4R7S	E.CAPACITOR 50V 4.7U	1	
C704		ECUM1H103ZFN	C.CAPACITOR CH 50V 0.01U	1	
C705		ECQM1H682JF	P.CAPACITOR 50V 6800P	1	
C706-08		ECUM1H103ZFN	C.CAPACITOR CH 50V 0.01U	3	
C709		ECQP1H151JZ	P.CAPACITOR 50V 150U	1	
C710,11		ECUM1H103ZFN	C.CAPACITOR CH 50V 0.01U	2	
C712,13		ECQP1H151JZ	P.CAPACITOR 50V 150U	2	
C714-19		ECUM1H103ZFN	C.CAPACITOR CH 50V 0.01U	6	
C720		ECEA1CU220	E.CAPACITOR 16V 22U	1	
C721		ECQM1H122JF	P.CAPACITOR 50V 1200P	1	
C722		ECUM1H103ZFN	C.CAPACITOR CH 50V 0.01U	1	
C723		ECUM1H470JCN	P.CAPACITOR 50V 47P	1	
C724		ECUM1H180JCN	C.CAPACITOR CH 50V 18P	1	
C725		ECUM1H103ZFN	C.CAPACITOR CH 50V 0.01U	1	
C726		ECEA1CU330	E.CAPACITOR 16V 33U	1	
C727		ECQM1H124JF	P.CAPACITOR 50V 0.12U	1	
C728,29		ECUM1H103ZFN	C.CAPACITOR CH 50V 0.01U	2	
C730-32		ECUM1H472KBN	C.CAPACITOR CH 50V 4700P	3	
C733		ECQM1H124JF	P.CAPACITOR 50V 0.12U	1	
C734,35		ECUM1H103ZFN	C.CAPACITOR CH 50V 0.01U	2	
C736		ECQM1H182JF	P.CAPACITOR 50V 1800P	1	
C737		ECEA1HUR33	E.CAPACITOR 50V 0.33U	1	
C738		ECUM1H103ZFN	C.CAPACITOR CH 50V 0.01U	1	
C739		ECEA1CU100	E.CAPACITOR 16V 10U	1	
C740		ECEA1HUR33	E.CAPACITOR 50V 0.33U	1	
C741		ECUM1H103ZFN	C.CAPACITOR CH 50V 0.01U	1	
C742		ECEA1CU100	E.CAPACITOR 16V 10U	1	
C743		ECEA1HUR33	E.CAPACITOR 50V 0.33U	1	
C744		ECUM1H103ZFN	C.CAPACITOR CH 50V 0.01U	1	
C745		ECEA1CU100	E.CAPACITOR 16V 10U	1	
C746,47		ECEA1AU330	E.CAPACITOR 10V 33U	2	
C748		ECEA1HUR33	E.CAPACITOR 50V 0.33U	1	
C749		ECUM1H103ZFN	C.CAPACITOR CH 50V 0.01U	1	
C750		ECEA1CU100	E.CAPACITOR 16V 10U	1	
C751		ECUM1H103KBN	C.CAPACITOR CH 50V 0.01U	1	
C752		ECUM1H330JCN	C.CAPACITOR CH 50V 33P	1	
C753,54		ECEA1AU330	E.CAPACITOR 10V 33U	2	
C755		ECUM1H103KBN	C.CAPACITOR CH 50V 0.01U	1	
C756		ECUM1H103ZFN	C.CAPACITOR CH 50V 0.01U	1	
C757		ECUM1H271JCN	C.CAPACITOR CH 50V 270P	1	
C758		ECUM1H103ZFN	C.CAPACITOR CH 50V 0.01U	1	

Ref.No.		Part No.	Part Name & Description	Pcs	Remarks
C759		ECUM1H103KBN	C.CAPACITOR CH 50V 0.01U	1	
C760		ECUM1H103ZFN	C.CAPACITOR CH 50V 0.01U	1	
C761		ECUM1H330JCN	C.CAPACITOR CH 50V 33P	1	
C762		ECUM1H271JCN	C.CAPACITOR CH 50V 270P	1	
C763,64		ECEA1AU330	E.CAPACITOR 10V 33U	2	
C765		ECUM1H103KBN	C.CAPACITOR CH 50V 0.01U	1	
C900-11		ECUM1H103ZFN	C.CAPACITOR CH 50V 0.01U	12	
D1		MA151K	DIODE	1	
D1		MA151K	DIODE	1	
D2,D3		MA151WA	DIODE	2	
D4		MA151K	DIODE	1	
D4-D6		MA151K	DIODE	3	
D101		MA151K	DIODE	1	
D102		MA153	DIODE	1	
D103		MA151WK	DIODE	1	
D104		MA151K	DIODE	1	
D105		MA151WK	DIODE	1	
D106,07		MA151WA	DIODE	2	
D108		MA151K	DIODE	1	
D109		MA151WK	DIODE	1	
D112		MA151WK	DIODE	1	
D113,14		MA151K	DIODE	2	
D115		MA153	DIODE	1	
D116		MA151K	DIODE	1	
D119		MA151WK	DIODE	1	
D120-22		MA151WA	DIODE	3	
D123		MA151K	DIODE	1	
D124		MA151WA	DIODE	1	
D125		MA151K	DIODE	1	
D126,27		MA153	DIODE	2	
D301,02		MA151K	DIODE	2	
D303		MA151WK	DIODE	1	
D304		MA151WA	DIODE	1	
D305		MA151K	DIODE	1	
D307		MA151WA	DIODE	1	
D309		MA151WK	DIODE	1	
D310		MA151K	DIODE	1	
D313		MA151WA	DIODE	1	
D314-17		MA151WK	DIODE	4	
D318		MA151K	DIODE	1	
D319,20		MA151WK	DIODE	2	
D321,22		MA151K	DIODE	2	
D323,24		MA151WK	DIODE	2	
D325		MA151K	DIODE	1	
D328-30		MA151K	DIODE	3	
D332		MA151K	DIODE	1	
D333		MA151WK	DIODE	1	
D334-37		MA151K	DIODE	4	
D338		MA151WK	DIODE	1	
D340		MA151WA	DIODE	1	
D341		MA151K	DIODE	1	
D349-51		MA165	DIODE	3	
D501		MA151K	DIODE	1	
D502		MA151WK	DIODE	1	
D503		MA153	DIODE	1	
D504		MA151WK	DIODE	1	
D505,06		MA151K	DIODE	2	
D507		MA151WK	DIODE	1	
D508,09		MA151K	DIODE	2	
D510		MA151WK	DIODE	1	
D511		MA151K	DIODE	1	
D514-17		MA701A	DIODE	4	
D572		MA151K	DIODE	1	
D700		MA151WA	DIODE	1	
D701,02		1SS101	DIODE	2	
D703		MA151K	DIODE	1	
D704-06		MA153	DIODE	3	
D707-09		LN25RP	LED	3	
D710		MA153	DIODE	1	
D711,12		MA1039	DIODE	2	
D713		MA153	DIODE	1	
D714,15		MA1039	DIODE	2	

Refer to the P.C.BOARDS LIST, page 6-1-1, before using this page.

Ref.No.		Part No.	Part Name & Description	Pcs	Remarks
D716-21		MA153	DIODE	6	
IC1		LM2904M	IC	1	
IC1		MC74HC02AF	IC	1	
IC2		LM2903M	IC	1	
IC2		MC74HC02AF	IC	1	
IC3		LM2904M	IC	1	
IC4		NJM4558M	IC	1	
IC5		MC14538BF	IC	1	
IC6		UPD65031F405	IC	1	
IC7		MN53015VZW	IC	1	
IC8		MC14049UBF	IC	1	
IC9		MC14013BF	IC	1	
IC10		MM74HC221AM	IC	1	
IC11		AN78L05	IC	1	
IC12		MC14021BF	IC	1	
IC13		MC14094BF	IC	1	
IC14		UPD4053BG	IC	1	
IC15		MC14049UBF	IC	1	
IC16		MC14050BF	IC	1	
IC18		MN51020VZZ	IC	1	
IC101		LM2904M	IC	1	
IC102		LM2903M	IC	1	
IC103		LM2904M	IC	1	
IC104		MC14538BF	IC	1	
IC105		AN79L09	IC	1	
IC106		AN78N09	IC	1	
IC107		DN74LS293S	IC	1	
IC108		MC74HC00AF	IC	1	
IC109		MN6064R	IC	1	
IC110		MN6168VIA	IC	1	
IC111		MC74HCU04F	IC	1	
IC112		MC14049UBF	IC	1	
IC113,14		LM2904M	IC	2	
IC115		LM2903M	IC	1	
IC116,17		LM2904M	IC	2	
IC118-20		MC14066BF	IC	3	
IC121		UPD4052BG	IC	1	
IC123		UPD4053BG	IC	1	
IC124		MN53030VYA	IC	1	
IC125		MN53007VYC	IC	1	
IC126		UPC4558G	IC	1	
IC128		NJM4558M	IC	1	
IC129		MC14538BF	IC	1	
IC130		MC14013BF	IC	1	
IC131		LM2904M	IC	1	
IC132		UPC4558G	IC	1	
IC133		MN4030BS	IC	1	
IC134		MC14538BF	IC	1	
IC135		UPD4053BG	IC	1	
IC137		MC14538BF	IC	1	
IC301		AN78L05	IC	1	
IC302		LM2904M	IC	1	
IC303		LM2902M	IC	1	
IC304		UPD4053BG	IC	1	
IC305		MC14066BF	IC	1	
IC306		LM2904M	IC	1	
IC307		LM2902M	IC	1	
IC308,09		LM2904M	IC	2	
IC310-13		MC14066BF	IC	4	
IC314		MC14028BF	IC	1	
IC315		MC14081BF	IC	1	
IC316		NJM2901M	IC	1	
IC317,18		MC14538BF	IC	2	
IC319		MC14049UBF	IC	1	
IC501		BA6149LS	IC	1	
IC502		PU4213	IC	1	
IC503-06		AN3821K	IC	4	
IC700		AN608P	IC	1	
IC701		UPC4741G	IC	1	
IC702		TL431CLP	IC	1	#IC
IC703		UPD4053BG	IC	1	
IC704		UPC4558G	IC	1	

Ref.No.		Part No.	Part Name & Description	Pcs	Remarks
IC705		UPC4082G	IC	1	
IC706		MC74HC157AF	IC	1	
IC707		MN18882	IC	1	
IC708		VSI0623	IC	1	#IC
IC709		M51951BML	IC	1	
IC710		MC14538BF	IC	1	
IC711		MSM5210RS	IC	1	
IC712		UPD65024F137	IC	1	#IC
IC713		UPC4082G	IC	1	
IC714		UPC4558G	IC	1	
IC715		MC14051BF	IC	1	
IC716		UPC4082G	IC	1	
IC717		UPC4741G	IC	1	
IC718		UPC4558G	IC	1	
IC719		MC14051BF	IC	1	
IC720		UPD4053BG	IC	1	
IC721		AN79L05	IC	1	
IC722		AN78L05	IC	1	
IC723		AN78L09	IC	1	
IC724		AN79L09	IC	1	
IC725,26		LM2902M	IC	2	
IC727		LM2903M	IC	1	
IC800		LM2904M	IC	1	
ICS708		VJS2336A028	CONNECTOR (FEMALE)	1	
L1		VLP0017	COIL	1	
L2-L4		VLQEL05S221J	COIL 220UH	3	
L101,02		VLQEL05S221J	COIL 220UH	2	
L501		VLQ0214	COIL 50UH	1	
L504-07		VLQ0129	COIL 300UH	4	
L701		VLQEL05S101J	COIL 100UH	1	
L702		VLQ0128	COIL 47UH	1	
Q1		UN2213	TRANSISTOR-RESISTOR	1	
Q1,Q2		UN2213	TRANSISTOR-RESISTOR	2	
Q2		UN2213	TRANSISTOR-RESISTOR	1	
Q8,Q9		UN2213	TRANSISTOR-RESISTOR	2	
Q10,11		UN2213	TRANSISTOR-RESISTOR	2	
Q17		UN2213	TRANSISTOR-RESISTOR	1	
Q101		2SD601	TRANSISTOR CHIP	1	(Q,R)
Q102		UN2213	TRANSISTOR-RESISTOR	1	
Q103		2SJ43	TRANSISTOR	1	
Q104		UN2213	TRANSISTOR-RESISTOR	1	
Q105		2SD601	TRANSISTOR CHIP	1	(Q,R)
Q106-08		UN2213	TRANSISTOR-RESISTOR	3	
Q109		2SD601	TRANSISTOR CHIP	1	(Q,R)
Q110-19		UN2213	TRANSISTOR-RESISTOR	10	
Q120		2SD601	TRANSISTOR CHIP	1	(Q,R)
Q123,24		UN2213	TRANSISTOR-RESISTOR	2	
Q128		UN2213	TRANSISTOR-RESISTOR	1	
Q129		UN2214	TRANSISTOR-RESISTOR	1	
Q130		2SK374	TRANSISTOR	1	
Q131-33		UN2213	TRANSISTOR-RESISTOR	3	
Q134,35		2SB709	TRANSISTOR CHIP	2	(Q,R)
Q137-39		UN2213	TRANSISTOR-RESISTOR	3	
Q140		MA151A	DIODE	1	
Q301,02		UN2213	TRANSISTOR-RESISTOR	2	
Q303		UN2113	TRANSISTOR-RESISTOR	1	
Q304		UN2213	TRANSISTOR-RESISTOR	1	
Q305		UN2113	TRANSISTOR-RESISTOR	1	
Q306-09		UN2213	TRANSISTOR-RESISTOR	4	
Q312-14		UN2213	TRANSISTOR-RESISTOR	3	
Q316		2SD601	TRANSISTOR CHIP	1	(Q,R)
Q317		UN2213	TRANSISTOR-RESISTOR	1	
Q319		2SD601	TRANSISTOR CHIP	1	(Q,R)
Q320		UN2213	TRANSISTOR-RESISTOR	1	
Q326		UN2213	TRANSISTOR-RESISTOR	1	
Q330-33		UN2213	TRANSISTOR-RESISTOR	4	
Q336,37		UN2213	TRANSISTOR-RESISTOR	2	
Q339,40		UN2213	TRANSISTOR-RESISTOR	2	
Q343		UN2213	TRANSISTOR-RESISTOR	1	

Refer to the P.C.BOARDS LIST, page 6-1-1, before using this page.

Ref.No.		Part No.	Part Name & Description	Pcs	Remarks
Q501-04		2SB709	TRANSISTOR CHIP	4	(Q,R)
Q505		UN2113	TRANSISTOR-RESISTOR	1	
Q506		UN2213	TRANSISTOR-RESISTOR	1	
Q507		UN2113	TRANSISTOR-RESISTOR	1	
Q508,09		UN2213	TRANSISTOR-RESISTOR	2	
Q700		UN2113	TRANSISTOR-RESISTOR	1	
Q701-11		UN2213	TRANSISTOR-RESISTOR	11	
			RESISTORS		
R1		ERJ6GEYJ103	M.RESISTOR CH 1/10W 10K	1	
R1		ERJ6GEYJ472	M.RESISTOR CH 1/10W 4.7K	1	
R2		ERJ6GEYJ562	M.RESISTOR CH 1/10W 5.6K	1	
R2		ERJ6GEYJ683	M.RESISTOR CH 1/10W 68K	1	
R3		ERJ6GEYJ103	M.RESISTOR CH 1/10W 10K	1	
R3		ERJ6GEYJ562	M.RESISTOR CH 1/10W 5.6K	1	
R4		ERJ6GEYJ105	M.RESISTOR CH 1/10W 1M	1	
R4		ERJ6GEYJ105	M.RESISTOR CH 1/10W 1M	1	
R5		ERJ6GEYJ103	M.RESISTOR CH 1/10W 10K	1	
R5		ERJ6GEYJ105	M.RESISTOR CH 1/10W 1M	1	
R6		ERJ6GEYJ103	M.RESISTOR CH 1/10W 10K	1	
R6		ERJ6GEYJ562	M.RESISTOR CH 1/10W 5.6K	1	
R7		ERJ6GEYJ155	M.RESISTOR CH1/10W 1.5M	1	
R7		ERJ6GEYJ562	M.RESISTOR CH 1/10W 5.6K	1	
R8		ERJ6GEYJ103	M.RESISTOR CH 1/10W 10K	1	
R9		ERJ6GEYJ125	M.RESISTOR CH1/10W 1.2M	1	
R10		ERJ6GEYJ563	M.RESISTOR CH 1/10W 56K	1	
R10		ERJ6GEYJ823	M.RESISTOR CH 1/10W 82K	1	
R11,12		VRE0034E102	M.RESISTOR CH 1/10W 1K	2	
R13		ERJ6GEYJ123	M.RESISTOR CH1/10W 12K	1	
R14		ERJ6GEYJ823	M.RESISTOR CH 1/10W 82K	1	
R15		ERJ6GEYJ393	M.RESISTOR CH 1/10W 39K	1	
R16		ERJ6GEYJ564	M.RESISTOR CH 1/10W 560K	1	
R17		ERJ6GEYJ822	M.RESISTOR CH 1/10W 8.2K	1	
R18,19		ERJ6GEYJ183	M.RESISTOR CH 1/10W 18K	2	
R20		ERJ6GEYJ822	M.RESISTOR CH 1/10W 8.2K	1	
R21		ERJ6GEYJ104	M.RESISTOR CH 1/10W 100K	1	
R22		ERJ6GEYJ472	M.RESISTOR CH 1/10W 4.7K	1	
R23		ERJ6GEYJ103	M.RESISTOR CH 1/10W 10K	1	
R24		ERJ6GEYJ563	M.RESISTOR CH 1/10W 56K	1	
R25		ERJ6GEYJ102	M.RESISTOR CH 1/10W 1K	1	
R27		ERJ6GEYJ103	M.RESISTOR CH 1/10W 10K	1	
R28-31		ERJ6GEYJ563	M.RESISTOR CH 1/10W 56K	4	
R34,35		ERJ6GEYJ103	M.RESISTOR CH 1/10W 10K	2	
R36		ERJ6GEYJ562	M.RESISTOR CH 1/10W 5.6K	1	
R37-44		ERJ6GEYJ563	M.RESISTOR CH 1/10W 56K	8	
R45		ERJ6GEYJ104	M.RESISTOR CH 1/10W 100K	1	
R50		ERJ6GEYJ563	M.RESISTOR CH 1/10W 56K	1	
R51		ERJ6GEYJ103	M.RESISTOR CH 1/10W 10K	1	
R52		ERJ6GEYJ474	M.RESISTOR CH 1/10W 470K	1	
R53		ERJ6GEYJ563	M.RESISTOR CH 1/10W 56K	1	
R54		ERJ6GEYJ103	M.RESISTOR CH 1/10W 10K	1	
R55		ERJ6GEYJ474	M.RESISTOR CH 1/10W 470K	1	
R56		ERJ6GEYJ563	M.RESISTOR CH 1/10W 56K	1	
R57		ERJ6GEYJ103	M.RESISTOR CH 1/10W 10K	1	
R58		ERJ6GEYJ474	M.RESISTOR CH 1/10W 470K	1	
R59		ERJ6GEYJ103	M.RESISTOR CH 1/10W 10K	1	
R60		ERJ6GEYJ102	M.RESISTOR CH 1/10W 1K	1	
R61		ERJ6GEYJ223	M.RESISTOR CH 1/10W 22K	1	
R62		ERJ6GEYJ103	M.RESISTOR CH 1/10W 10K	1	
R69,70		ERJ6GEYJ102	M.RESISTOR CH 1/10W 1K	2	
R101		ERJ6GEYJ103	M.RESISTOR CH 1/10W 10K	1	
R102		ERJ6GEYJ184	M.RESISTOR CH1/10W 180K	1	
R103		ERJ6GEYJ102	M.RESISTOR CH 1/10W 1K	1	
R104		ERJ6GEYJ474	M.RESISTOR CH 1/10W 470K	1	
R105-07		ERJ6GEYJ103	M.RESISTOR CH 1/10W 10K	3	
R108		ERJ6GEYJ184	M.RESISTOR CH1/10W 180K	1	
R109		ERJ6GEYJ102	M.RESISTOR CH 1/10W 1K	1	
R110,11		ERJ6GEYJ474	M.RESISTOR CH 1/10W 470K	2	
R112		ERJ6GEYJ153	M.RESISTOR CH 1/10W 15K	1	
R113		ERJ6GEYJ562	M.RESISTOR CH 1/10W 5.6K	1	
R114		ERJ6GEYJ224	M.RESISTOR CH 1/10W 220K	1	
R115		ERJ6GEYJ682	M.RESISTOR CH 1/10W 6.8K	1	
R116		ERJ6GEYJ153	M.RESISTOR CH 1/10W 15K	1	
R117		ERJ6GEYJ104	M.RESISTOR CH 1/10W 100K	1	
R118		ERJ6GEYJ103	M.RESISTOR CH 1/10W 10K	1	
R119		ERJ6GEYJ153	M.RESISTOR CH 1/10W 15K	1	
R120		ERJ6GEYJ152	M.RESISTOR CH 1/10W 1.5K	1	
R121,22		ERJ6GEYJ103	M.RESISTOR CH 1/10W 10K	2	
R123		ERJ6GEYJ105	M.RESISTOR CH 1/10W 1M	1	
R124		ERJ6GEYJ272	M.RESISTOR CH 1/10W 2.7K	1	
R125		ERJ6GEYJ103	M.RESISTOR CH 1/10W 10K	1	
R126-32		ERJ6GEYJ563	M.RESISTOR CH 1/10W 56K	7	
R133,34		ERJ6GEYJ103	M.RESISTOR CH 1/10W 10K	2	
R135,36		ERJ6GEYJ563	M.RESISTOR CH 1/10W 56K	2	
R137		ERJ6GEYJ103	M.RESISTOR CH 1/10W 10K	1	
R138		ERJ6GEYJ563	M.RESISTOR CH 1/10W 56K	1	
R139		ERJ6GEYJ224	M.RESISTOR CH 1/10W 220K	1	
R140		ERJ6GEYJ563	M.RESISTOR CH 1/10W 56K	1	
R141		ERJ6GEYJ224	M.RESISTOR CH 1/10W 220K	1	
R142		ERJ6GEYJ563	M.RESISTOR CH 1/10W 56K	1	
R143		ERJ6GEYJ223	M.RESISTOR CH 1/10W 22K	1	
R144		ERJ6GEYJ103	M.RESISTOR CH 1/10W 10K	1	
R145		ERJ6GEYJ563	M.RESISTOR CH 1/10W 56K	1	
R146		ERJ6GEYJ562	M.RESISTOR CH 1/10W 5.6K	1	
R147,48		ERJ6GEYJ273	M.RESISTOR CH1/10W 27K	2	
R150		ERJ6GEYJ183	M.RESISTOR CH 1/10W 18K	1	
R151		ERJ6GEYJ103	M.RESISTOR CH 1/10W 10K	1	
R152		ERJ6GEYJ824	M.RESISTOR CH 1/10W 820K	1	
R153		ERJ6GEYJ562	M.RESISTOR CH 1/10W 5.6K	1	
R154-56		ERJ6GEYJ393	M.RESISTOR CH 1/10W 39K	3	
R157		ERJ6GEYJ103	M.RESISTOR CH 1/10W 10K	1	
R158		ERJ6GEYJ183	M.RESISTOR CH 1/10W 18K	1	
R159		ERJ6GEYJ682	M.RESISTOR CH 1/10W 6.8K	1	
R160		ERJ6GEYJ183	M.RESISTOR CH 1/10W 18K	1	
R161		ERJ6GEYJ103	M.RESISTOR CH 1/10W 10K	1	
R162		ERJ6GEYJ563	M.RESISTOR CH 1/10W 56K	1	
R163		ERJ6GEYJ103	M.RESISTOR CH 1/10W 10K	1	
R164		ERJ6GEYJ562	M.RESISTOR CH 1/10W 5.6K	1	
R165		ERJ6GEYJ333	M.RESISTOR CH 1/10W 33K	1	
R166		ERJ6GEYJ222	M.RESISTOR CH 1/10W 2.2K	1	
R167		ERJ6GEYJ183	M.RESISTOR CH 1/10W 18K	1	
R168		ERJ6GEYJ273	M.RESISTOR CH1/10W 27K	1	
R169		ERJ6GEYJ103	M.RESISTOR CH 1/10W 10K	1	
R170,71		ERJ6GEYJ563	M.RESISTOR CH 1/10W 56K	2	
R172		ERJ6GEYJ102	M.RESISTOR CH 1/10W 1K	1	
R181,82		ERJ6GEYJ563	M.RESISTOR CH 1/10W 56K	2	
R183		ERJ6GEYJ102	M.RESISTOR CH 1/10W 1K	1	
R184		ERJ6GEYJ563	M.RESISTOR CH 1/10W 56K	1	
R185		ERJ6GEYJ104	M.RESISTOR CH 1/10W 100K	1	
R186		ERJ6GEYJ102	M.RESISTOR CH 1/10W 1K	1	
R187,88		ERJ6GEYJ822	M.RESISTOR CH 1/10W 8.2K	2	
R189		ERJ6GEYJ561	M.RESISTOR CH 1/10W 560	1	
R190		ERJ6GEYJ472	M.RESISTOR CH 1/10W 4.7K	1	
R191,92		ERJ6GEYJ563	M.RESISTOR CH 1/10W 56K	2	
R193,94		ERJ6GEYJ273	M.RESISTOR CH1/10W 27K	2	
R195		ERJ6GEYJ562	M.RESISTOR CH 1/10W 5.6K	1	
R196		ERJ6GEYJ153	M.RESISTOR CH 1/10W 15K	1	
R197		ERJ6GEYJ332	M.RESISTOR CH 1/10W 3.3K	1	
R204		ERJ6GEYJ562	M.RESISTOR CH 1/10W 5.6K	1	
R205		ERJ6GEYJ101	M.RESISTOR CH 1/10W 100	1	
R206		ERJ6GEYJ104	M.RESISTOR CH 1/10W 100K	1	
R207-09		ERJ6GEYJ102	M.RESISTOR CH 1/10W 1K	3	
R210		ERJ6GEYJ153	M.RESISTOR CH 1/10W 15K	1	
R211		ERJ6GEYJ183	M.RESISTOR CH 1/10W 18K	1	
R212		ERJ6GEYJ683	M.RESISTOR CH 1/10W 68K	1	
R213-15		ERJ6GEYJ563	M.RESISTOR CH 1/10W 56K	3	
R216		ERJ6GEYJ105	M.RESISTOR CH 1/10W 1M	1	
R222-27		ERJ6GEYJ563	M.RESISTOR CH 1/10W 56K	6	
R228		ERJ6GEYJ104	M.RESISTOR CH 1/10W 100K	1	
R229		ERJ6GEYJ223	M.RESISTOR CH 1/10W 22K	1	
R230		ERJ6GEYJ563	M.RESISTOR CH 1/10W 56K	1	
R231		ERJ6GEYJ104	M.RESISTOR CH 1/10W 100K	1	
R232		VRE0034E272	M.RESISTOR CH 1/10W 2.7K	1	
R233		VRE0034E104	M.RESISTOR CH 1/10W 100K	1	
R234		VRE0034E272	M.RESISTOR CH 1/10W 2.7K	1	
R235		VRE0034E104	M.RESISTOR CH 1/10W 100K	1	
R236		ERJ6GEYJ563	M.RESISTOR CH 1/10W 56K	1	
R237		ERJ6GEYJ824	M.RESISTOR CH 1/10W 820K	1	

Refer to the P.C.BOARDS LIST, page 6-1-1, before using this page.

Ref.No.		Part No.	Part Name & Description	Pcs	Remarks
R238		ERJ6GEYJ102	M.RESISTOR CH 1/10W 1K	1	
R239		ERJ6GEYJ103	M.RESISTOR CH 1/10W 10K	1	
R240		ERJ6GEYJ222	M.RESISTOR CH 1/10W 2.2K	1	
R241		ERJ6GEYJ104	M.RESISTOR CH 1/10W 100K	1	
R242		ERJ6GEYJ334	M.RESISTOR CH 1/10W 330K	1	
R243		ERJ6GEYJ101	M.RESISTOR CH 1/10W 100	1	
R244,45		ERJ6GEYJ103	M.RESISTOR CH 1/10W 10K	2	
R246		ERJ6GEYJ102	M.RESISTOR CH 1/10W 1K	1	
R247		ERJ6GEYJ103	M.RESISTOR CH 1/10W 10K	1	
R248		ERJ6GEYJ562	M.RESISTOR CH 1/10W 5.6K	1	
R249		ERJ6GEYJ392	M.RESISTOR CH 1/10W 3.9K	1	
R250		ERJ6GEYJ184	M.RESISTOR CH1/10W 180K	1	
R251		ERJ6GEYJ224	M.RESISTOR CH 1/10W 220K	1	
R252		ERJ6GEYJ153	M.RESISTOR CH 1/10W 15K	1	
R253		ERJ6GEYJ474	M.RESISTOR CH 1/10W 470K	1	
R254-58		ERJ6GEYJ103	M.RESISTOR CH 1/10W 10K	5	
R259		ERJ6GEYJ223	M.RESISTOR CH 1/10W 22K	1	
R260		ERJ6GEYJ393	M.RESISTOR CH 1/10W 39K	1	
R261		ERJ6GEYJ823	M.RESISTOR CH 1/10W 82K	1	
R262		ERJ6GEYJ123	M.RESISTOR CH1/10W 12K	1	
R263		ERJ6GEYJ183	M.RESISTOR CH 1/10W 18K	1	
R264		ERJ6GEYJ333	M.RESISTOR CH 1/10W 33K	1	
R265		ERJ6GEYJ683	M.RESISTOR CH 1/10W 68K	1	
R266-69		ERJ6GEYJ563	M.RESISTOR CH 1/10W 56K	4	
R270		ERJ6GEYJ562	M.RESISTOR CH 1/10W 5.6K	1	
R271		ERJ6GEYJ103	M.RESISTOR CH 1/10W 10K	1	
R273		ERJ6GEYJ393	M.RESISTOR CH 1/10W 39K	1	
R274		ERJ6GEYJ103	M.RESISTOR CH 1/10W 10K	1	
R275		ERJ6GEYJ563	M.RESISTOR CH 1/10W 56K	1	
R276,77		VREO034E102	M.RESISTOR CH 1/10W 1K	2	
R278		ERJ6GEYJ103	M.RESISTOR CH 1/10W 10K	1	
R279-82		ERJ6GEYJ563	M.RESISTOR CH 1/10W 56K	4	
R283		ERJ6GEYJ103	M.RESISTOR CH 1/10W 10K	1	
R284		ERJ6GEYJ272	M.RESISTOR CH 1/10W 2.7K	1	
R285		ERJ6GEYJ122	M.RESISTOR CH1/10W 1.2K	1	
R286		ERJ6GEYJ472	M.RESISTOR CH 1/10W 4.7K	1	
R301		ERJ6GEYJ563	M.RESISTOR CH 1/10W 56K	1	
R302,03		ERJ6GEYJ103	M.RESISTOR CH 1/10W 10K	2	
R304		ERJ6GEYJ563	M.RESISTOR CH 1/10W 56K	1	
R305		ERJ6GEYJ104	M.RESISTOR CH 1/10W 100K	1	
R306		ERJ6GEYJ683	M.RESISTOR CH 1/10W 68K	1	
R307		ERJ6GEYJ223	M.RESISTOR CH 1/10W 22K	1	
R308		ERJ6GEYJ103	M.RESISTOR CH 1/10W 10K	1	
R309		ERJ6GEYJ472	M.RESISTOR CH 1/10W 4.7K	1	
R310		ERJ6GEYJ822	M.RESISTOR CH 1/10W 8.2K	1	
R311		ERJ6GEYJ392	M.RESISTOR CH 1/10W 3.9K	1	
R312		ERJ6GEYJ153	M.RESISTOR CH 1/10W 15K	1	
R313		ERJ6GEYJ332	M.RESISTOR CH 1/10W 3.3K	1	
R314		ERJ6GEYJ151	M.RESISTOR CH 1/10W 150	1	
R315,16		ERJ6GEYJ103	M.RESISTOR CH 1/10W 10K	2	
R317		ERJ6GEYJ683	M.RESISTOR CH 1/10W 68K	1	
R318		ERJ6GEYJ103	M.RESISTOR CH 1/10W 10K	1	
R319		ERJ6GEYJ273	M.RESISTOR CH1/10W 27K	1	
R320		ERJ6GEYJ104	M.RESISTOR CH 1/10W 100K	1	
R321		ERJ6GEYJ223	M.RESISTOR CH 1/10W 22K	1	
R322		ERJ6GEYJ124	M.RESISTOR CH 1/10W 120K	1	
R325,26		VREO034E332	M.RESISTOR CH 1/10W 3.3K	2	
R327		ERJ6GEYJ223	M.RESISTOR CH 1/10W 22K	1	
R328		ERJ6GEYJ104	M.RESISTOR CH 1/10W 100K	1	
R329		ERJ6GEYJ393	M.RESISTOR CH 1/10W 39K	1	
R330		ERJ6GEYJ334	M.RESISTOR CH 1/10W 330K	1	
R331		ERJ6GEYJ474	M.RESISTOR CH 1/10W 470K	1	
R332,33		ERJ6GEYJ104	M.RESISTOR CH 1/10W 100K	2	
R334		ERJ6GEYJ105	M.RESISTOR CH 1/10W 1M	1	
R335		ERJ6GEYJ684	M.RESISTOR CH 1/10W 680K	1	
R336		ERJ6GEYJ473	M.RESISTOR CH 1/10W 47K	1	
R337,38		ERJ6GEYJ103	M.RESISTOR CH 1/10W 10K	2	
R339,40		VREO034E332	M.RESISTOR CH 1/10W 3.3K	2	
R341		ERJ6GEYJ223	M.RESISTOR CH 1/10W 22K	1	
R342		ERJ6GEYJ104	M.RESISTOR CH 1/10W 100K	1	
R343		ERJ6GEYJ473	M.RESISTOR CH 1/10W 47K	1	
R344		ERJ6GEYJ334	M.RESISTOR CH 1/10W 330K	1	
R345		ERJ6GEYJ474	M.RESISTOR CH 1/10W 470K	1	
R346		ERJ6GEYJ104	M.RESISTOR CH 1/10W 100K	1	
R347		ERJ6GEYJ105	M.RESISTOR CH 1/10W 1M	1	

Ref.No.		Part No.	Part Name & Description	Pcs	Remarks
R348		ERJ6GEYJ684	M.RESISTOR CH 1/10W 680K	1	
R349,50		ERJ6GEYJ103	M.RESISTOR CH 1/10W 10K	2	
R351		ERJ6GEYJ472	M.RESISTOR CH 1/10W 4.7K	1	
R352-55		ERJ6GEYJ103	M.RESISTOR CH 1/10W 10K	4	
R356		ERJ6GEYJ222	M.RESISTOR CH 1/10W 2.2K	1	
R357		ERJ6GEYJ223	M.RESISTOR CH 1/10W 22K	1	
R358		ERJ6GEYJ104	M.RESISTOR CH 1/10W 100K	1	
R359-63		ERJ6GEYJ103	M.RESISTOR CH 1/10W 10K	5	
R365		ERJ6GEYJ104	M.RESISTOR CH 1/10W 100K	1	
R366		ERJ6GEYJ103	M.RESISTOR CH 1/10W 10K	1	
R367,68		ERJ6GEYJ563	M.RESISTOR CH 1/10W 56K	2	
R369		ERJ6GEYJ104	M.RESISTOR CH 1/10W 100K	1	
R370-74		ERJ6GEYJ103	M.RESISTOR CH 1/10W 10K	5	
R376		ERJ6GEYJ104	M.RESISTOR CH 1/10W 100K	1	
R378,79		ERJ6GEYJ563	M.RESISTOR CH 1/10W 56K	2	
R380		ERJ6GEYJ103	M.RESISTOR CH 1/10W 10K	1	
R381		ERJ6GEYJ473	M.RESISTOR CH 1/10W 47K	1	
R382		ERJ6GEYJ683	M.RESISTOR CH 1/10W 68K	1	
R383		ERJ6GEYJ152	M.RESISTOR CH 1/10W 1.5K	1	
R386		ERJ6GEYJ182	M.RESISTOR CH 1/10W 1.8K	1	
R388		ERJ6GEYJ223	M.RESISTOR CH 1/10W 22K	1	
R389		ERJ6GEYJ153	M.RESISTOR CH 1/10W 15K	1	
R390		ERJ6GEYJ223	M.RESISTOR CH 1/10W 22K	1	
R391		ERJ6GEYJ153	M.RESISTOR CH 1/10W 15K	1	
R392,93		ERJ6GEYJ103	M.RESISTOR CH 1/10W 10K	2	
R394,95		VREO034E102	M.RESISTOR CH 1/10W 1K	2	
R396,97		VREO034E472	M.RESISTOR CH 1/10W 4.7K	2	
R398		ERJ6GEYJ334	M.RESISTOR CH 1/10W 330K	1	
R399		ERJ6GEYJ333	M.RESISTOR CH 1/10W 33K	1	
R405		ERJ6GEYJ333	M.RESISTOR CH 1/10W 33K	1	
R406		ERJ6GEYJ103	M.RESISTOR CH 1/10W 10K	1	
R407		ERJ6GEYJ333	M.RESISTOR CH 1/10W 33K	1	
R408,09		ERJ6GEYJ103	M.RESISTOR CH 1/10W 10K	2	
R410		ERJ6GEYJ183	M.RESISTOR CH 1/10W 18K	1	
R421		ERJ6GEYJ221	M.RESISTOR CH 1/10W 220	1	
R423		ERJ6GEYJ221	M.RESISTOR CH 1/10W 220	1	
R424		ERJ6GEYJ222	M.RESISTOR CH 1/10W 2.2K	1	
R425		ERJ6GEYJ563	M.RESISTOR CH 1/10W 56K	1	
R427		ERJ6GEYJ333	M.RESISTOR CH 1/10W 33K	1	
R428		ERJ6GEYJ223	M.RESISTOR CH 1/10W 22K	1	
R431		ERJ6GEYJ563	M.RESISTOR CH 1/10W 56K	1	
R432,33		ERJ6GEYJ393	M.RESISTOR CH 1/10W 39K	2	
R434		ERJ6GEYJ331	M.RESISTOR CH 1/10W 330	1	
R435		ERJ6GEYJ103	M.RESISTOR CH 1/10W 10K	1	
R437		ERJ6GEYJ684	M.RESISTOR CH 1/10W 680K	1	
R440		ERJ6GEYJ562	M.RESISTOR CH 1/10W 5.6K	1	
R441,42		ERJ6GEYJ105	M.RESISTOR CH 1/10W 1M	2	
R443		ERJ6GEYJ223	M.RESISTOR CH 1/10W 22K	1	
R463		ERDS2TJ331	C.RESISTOR 1/4W 330	1	
R469		ERDS2TJ564	C.RESISTOR 1/4W 560K	1	
R470		ERDS2TJ394	C.RESISTOR 1/4W 390K	1	
R501		ERJ6GEYJ102	M.RESISTOR CH 1/10W 1K	1	
R502		ERJ6GEYJ103	M.RESISTOR CH 1/10W 10K	1	
R503		ERJ6GEYJ102	M.RESISTOR CH 1/10W 1K	1	
R504-07		ERJ6GEYJ821	M.RESISTOR CH 1/10W 820	4	
R508		ERJ6GEYJ473	M.RESISTOR CH 1/10W 47K	1	
R509-12		ERJ6GEYJ391	M.RESISTOR CH 1/10W 390	4	
R513		ERJ6GEYJ103	M.RESISTOR CH 1/10W 10K	1	
R514		ERJ6GEYJ224	M.RESISTOR CH 1/10W 220K	1	
R515		ERJ6GEYJ273	M.RESISTOR CH1/10W 27K	1	
R516		ERJ6GEYJ103	M.RESISTOR CH 1/10W 10K	1	
R517		ERJ6GEYJ272	M.RESISTOR CH 1/10W 2.7K	1	
R518		ERJ6GEYJ104	M.RESISTOR CH 1/10W 100K	1	
R519		ERJ6GEYJ392	M.RESISTOR CH 1/10W 3.9K	1	
R520		ERJ6GEYJ333	M.RESISTOR CH 1/10W 33K	1	
R521,22		ERJ6GEYJ224	M.RESISTOR CH 1/10W 220K	2	
R523		ERX12SJR47	M.RESISTOR 1/2W 0.47	1	
R524		ERJ6GEYJ273	M.RESISTOR CH1/10W 27K	1	
R525		ERJ6GEYJ272	M.RESISTOR CH 1/10W 2.7K	1	
R526		ERJ6GEYJ103	M.RESISTOR CH 1/10W 10K	1	
R527		ERJ6GEYJ104	M.RESISTOR CH 1/10W 100K	1	
R528		ERJ6GEYJ224	M.RESISTOR CH 1/10W 220K	1	
R529		ERJ6GEYJ392	M.RESISTOR CH 1/10W 3.9K	1	
R530		ERJ6GEYJ223	M.RESISTOR CH 1/10W 22K	1	
R531		ERJ6GEYJ224	M.RESISTOR CH 1/10W 220K	1	

Refer to the P.C.BOARDS LIST, page 6-1-1, before using this page.

Ref.No.		Part No.	Part Name & Description	Pcs	Remarks
R532		ERX12SJR68	M.RESISTOR 1/2W 0.68	1	
R533		ERJ6GEYJ224	M.RESISTOR CH 1/10W 220K	1	
R534		ERJ6GEYJ273	M.RESISTOR CH1/10W 27K	1	
R535		ERJ6GEYJ103	M.RESISTOR CH 1/10W 10K	1	
R536		ERJ6GEYJ104	M.RESISTOR CH 1/10W 100K	1	
R537		ERX12SJR47	M.RESISTOR 1/2W 0.47	1	
R538-40		ERJ6GEYJ224	M.RESISTOR CH 1/10W 220K	3	
R541		ERJ6GEYJ272	M.RESISTOR CH 1/10W 2.7K	1	
R542		ERJ6GEYJ223	M.RESISTOR CH 1/10W 22K	1	
R543		ERJ6GEYJ273	M.RESISTOR CH1/10W 27K	1	
R544		ERJ6GEYJ104	M.RESISTOR CH 1/10W 100K	1	
R545		ERJ6GEYJ103	M.RESISTOR CH 1/10W 10K	1	
R546		ERX12SJR47	M.RESISTOR 1/2W 0.47	1	
R547-49		ERJ6GEYJ224	M.RESISTOR CH 1/10W 220K	3	
R550		ERJ6GEYJ272	M.RESISTOR CH 1/10W 2.7K	1	
R551		ERJ6GEYJ223	M.RESISTOR CH 1/10W 22K	1	
R552		ERX1ANJ6R8	M.RESISTOR 1W 6.8	1	
R554		ERJ6GEYJ272	M.RESISTOR CH 1/10W 2.7K	1	
R700		ERJ6GEYJ103	M.RESISTOR CH 1/10W 10K	1	
R701		ERJ6GEYJ473	M.RESISTOR CH 1/10W 47K	1	
R702		ERJ6GEYJ103	M.RESISTOR CH 1/10W 10K	1	
R703		ERJ6GEYJ473	M.RESISTOR CH 1/10W 47K	1	
R704		ERJ6GEYJ103	M.RESISTOR CH 1/10W 10K	1	
R705		ERJ6GEYJ183	M.RESISTOR CH 1/10W 18K	1	
R706		ERJ6GEYJ473	M.RESISTOR CH 1/10W 47K	1	
R707		ERJ6GEYJ474	M.RESISTOR CH 1/10W 470K	1	
R708		ERJ6GEYJ331	M.RESISTOR CH 1/10W 330	1	
R709		ERJ6GEYJ102	M.RESISTOR CH 1/10W 1K	1	
R710		ERJ6GEYJ392	M.RESISTOR CH 1/10W 3.9K	1	
R711		ERJ6GEYJ393	M.RESISTOR CH 1/10W 39K	1	
R712		ERJ6GEYJ102	M.RESISTOR CH 1/10W 1K	1	
R713,14		ERJ6GEYG332	M.RESISTOR CH 1/10W 3.3K	2	
R715		ERJ6GEYG222	M.RESISTOR CH 1/10W 2.2K	1	
R716,17		ERJ6GEYJ332	M.RESISTOR CH 1/10W 3.3K	2	
R718		ERJ6GEYJ103	M.RESISTOR CH 1/10W 10K	1	
R719-26		ERJ6GEYG273	M.RESISTOR CH 1/10W 27K	8	
R727-40		ERJ6GEYJ473	M.RESISTOR CH 1/10W 47K	14	
R741		ERJ6GEYJ103	M.RESISTOR CH 1/10W 10K	1	
R742,43		ERJ6GEYJ473	M.RESISTOR CH 1/10W 47K	2	
R744		ERJ6GEYJ103	M.RESISTOR CH 1/10W 10K	1	
R746-50		ERJ6GEYJ103	M.RESISTOR CH 1/10W 10K	5	
R751		ERJ6GEYJ272	M.RESISTOR CH 1/10W 2.7K	1	
R752-54		ERJ6GEYJ561	M.RESISTOR CH 1/10W 560	3	
R755		ERJ6GEYJ223	M.RESISTOR CH 1/10W 22K	1	
R756-58		ERJ6GEYG273	M.RESISTOR CH 1/10W 27K	3	
R759		ERJ6GEYG683	M.RESISTOR CH 1/10W 68K	1	
R760		ERJ6GEYG822	M.RESISTOR CH1/10W 8.2K	1	
R761		ERJ6GEY0R00	M.RESISTOR CH 1/10W 0	1	
R762		ERJ6GEYG913	M.RESISTOR CH 1/10W 91K	1	
R763		ERJ6GEYJ334	M.RESISTOR CH 1/10W 330K	1	
R764		ERJ6GEYJ683	M.RESISTOR CH 1/10W 68K	1	
R765		ERJ6GEYJ334	M.RESISTOR CH 1/10W 330K	1	
R766,67		ERJ6GEYJ273	M.RESISTOR CH1/10W 27K	2	
R768		ERJ6GEYG182	M.RESISTOR CH 1/10W 1.8K	1	
R769		ERJ6GEYJ154	M.RESISTOR CH1/10W 150K	1	
R770		ERJ6GEYJ393	M.RESISTOR CH 1/10W 39K	1	
R771		ERJ6GEYG682	M.REISITOR CH 1/10W 6.8K	1	
R772-74		ERJ6GEYG273	M.RESISTOR CH 1/10W 27K	3	
R775		ERJ6GEYG683	M.RESISTOR CH 1/10W 68K	1	
R776		ERJ6GEYG822	M.RESISTOR CH1/10W 8.2K	1	
R777,78		ERJ6GEYG564	M.RESISTOR CH 1/10W 560K	2	
R779		ERJ6GEYJ683	M.RESISTOR CH 1/10W 68K	1	
R780,81		ERJ6GEYG333	M.RESISTOR CH1/10W 33K	2	
R782		ERJ6GEYJ564	M.RESISTOR CH 1/10W 560K	1	
R783		ERJ6GEY0R00	M.RESISTOR CH 1/10W 0	1	
R784		ERJ6GEYG913	M.RESISTOR CH 1/10W 91K	1	
R785		ERJ6GEYJ683	M.RESISTOR CH 1/10W 68K	1	
R786,87		ERJ6GEYJ334	M.RESISTOR CH 1/10W 330K	2	
R788,89		ERJ6GEYJ273	M.RESISTOR CH1/10W 27K	2	
R790		ERJ6GEYG182	M.RESISTOR CH 1/10W 1.8K	1	
R791		ERJ6GEYJ154	M.RESISTOR CH1/10W 150K	1	
R792		ERJ6GEYJ393	M.RESISTOR CH 1/10W 39K	1	
R793		ERJ6GEYG682	M.REISITOR CH 1/10W 6.8K	1	
R794,95		ERJ6GEYG273	M.RESISTOR CH 1/10W 27K	2	
R796		ERJ6GEYJ123	M.RESISTOR CH1/10W 12K	1	

Ref.No.		Part No.	Part Name & Description	Pcs	Remarks
R797,98		ERJ6GEYJ104	M.RESISTOR CH 1/10W 100K	2	
R799		ERJ6GEYJ683	M.RESISTOR CH 1/10W 68K	1	
R800		ERJ6GEYJ103	M.RESISTOR CH 1/10W 10K	1	
R801,02		VRE0034E103	M.RESISTOR CH 1/10W 10K	2	
R803		ERJ6GEYJ474	M.RESISTOR CH 1/10W 470K	1	
R804,05		ERJ6GEYJ224	M.RESISTOR CH 1/10W 220K	2	
R806		ERJ6GEYJ272	M.RESISTOR CH 1/10W 2.7K	1	
R807		ERJ6GEYJ224	M.RESISTOR CH 1/10W 220K	1	
R808		ERJ6GEYJ272	M.RESISTOR CH 1/10W 2.7K	1	
R809		ERJ6GEYJ103	M.RESISTOR CH 1/10W 10K	1	
R810,11		VRE0034E103	M.RESISTOR CH 1/10W 10K	2	
R812		ERJ6GEYJ474	M.RESISTOR CH 1/10W 470K	1	
R813,14		ERJ6GEYJ224	M.RESISTOR CH 1/10W 220K	2	
R815		ERJ6GEYJ272	M.RESISTOR CH 1/10W 2.7K	1	
R816		ERJ6GEYJ224	M.RESISTOR CH 1/10W 220K	1	
R817		ERJ6GEYJ272	M.RESISTOR CH 1/10W 2.7K	1	
RA700,01		VCR0202	RESISTOR ARRAY	2	
RA702		EXBLD8103G	COMBI.R-R 10K	1	
SW1,W2		VSR0032	VOLTAGE SELECT SWITCH	2	
SW700		VSS0207	SWITCH	1	
TP3-P7		VJR0582	PACK PIN	5	
TP13		VJR0582	PACK PIN	1	
TP15-17		VJR0582	PACK PIN	3	
TP19,20		VJR0582	PACK PIN	2	
TP102-05		VJR0582	PACK PIN	4	
TP108-18		VJR0582	PACK PIN	11	
TP201,02		VJR0582	PACK PIN	2	
TP302-04		VJR0582	PACK PIN	3	
TP306		VJR0582	PACK PIN	1	
TP309-12		VJR0582	PACK PIN	4	
TP700-14		VJR0582	PACK PIN	15	
TPG1-G3		VJR0582	PACK PIN	3	
VC101		ECV1ZW30X53	V.CAPACITOR 30P	1	
VR1		VRV0109B503	V.RESISTOR 50K	1	
VR3		VRV0109B503	V.RESISTOR 50K	1	
VR101		VRV0109B203	V.RESISTOR 20K	1	
VR102		VRV0109B103	V.RESISTOR 10K	1	
VR103		VRV0109B203	V.RESISTOR 20K	1	
VR104		VRV0109B502	V.RESISTOR 5K	1	
VR105		VRV0109B104	V.RESISTOR 100K	1	
VR301		VRV0109B502	V.RESISTOR 5K	1	
VR302,03		VRV0109B202	V.RESISTOR 2K	2	
VR304-07		VRV0109B503	V.RESISTOR 50K	4	
VR308		VRV0109B202	V.RESISTOR 2K	1	
VR700		VRV0109B202	V.RESISTOR 2K	1	
VR701		VRV0109B103	V.RESISTOR 10K	1	
VR702,03		VRV0110B503	V.RESISTOR 50K	2	
VR704-07		VRV0064B203	V.RESISTOR 20K	4	
VR708,09		VRV0109B102	V.RESISTOR 1K	2	
X101		VSX0081	CRYSTAL OSCILLATOR	1	
X501		VSX0136	CRYSTAL OSCILLATOR	1	
X700		VSX0149	CRYSTAL OSCILLATOR	1	
			MISCELLANEOUS		
		VJR0421	PIN	4	

Refer to the P.C.BOARDS LIST, page 6-1-1, before using this page.

Ref.No.		Part No.	Part Name & Description	Pcs	Remarks
		VML2143	CARD PULLER	1	
		VML2144	CARD PULLER	1	
		VMS4174	PIN	6	
		VMZ1091	BARRIER	1	
		VMZ1547	BARRIER	1	
		VSC2286	SHIELD CASE	1	
		VSC3056	SHIELD CASE	1	
		VXA3966	P.C.B. SHIELD PLATE	1	
		XNG26E	NUT	4	
		XYNV3+K6FR	SCREW	6	
		XYN26+C12	SCREW	4	

Refer to the P.C.BOARDS LIST, page 6-1-1, before using this page.

Ref.No.		Part No.	Part Name & Description	Pcs	Remarks
	■	VEP82061E	P.C.BOARD W/COMPONENT		FOR AU-65-E,B
			W5 SERVO		AU-62-E,B
			CAPACITORS		
C1		ECQM1H273JF	P.CAPACITOR 50V 0.027U	1	
C2		ECUM1H152JN	C.CAPACITOR CH 50V 1500P	1	
C3,C4		ECUM1H101JCN	C.CAPACITOR CH 50V 100P	2	
C5		ECEA1CU100	E.CAPACITOR 16V 10U	1	
C6		ECEA0JU101	E.CAPACITOR 6.3V 100U	1	
C7		ECEA1AU470	E.CAPACITOR 10V 47U	1	
C8		ECUM1H103ZFN	C.CAPACITOR CH 50V 0.01U	1	
C9		ECQM1H154JF	P.CAPACITOR 50V 0.15U	1	
C10		ECEA1HN2R2S	E.CAPACITOR 50V 2.2U	1	
C11		ECQM1H223JF	P.CAPACITOR 50V 0.022U	1	
C13		ECQP1H822JZ	P.CAPACITOR 50V 8200P	1	
C14		ECQM1H682JV	P.CAPACITOR 50V 6800P	1	
C15,16		ECUM1H103ZFN	C.CAPACITOR CH 50V 0.01U	2	
C17		ECQM1H394JV	P.CAPACITOR 50V 0.39U	1	
C18		ECEA1HU4R7	E.CAPACITOR 50V 4.7U	1	
C19		ECEA1AU470	E.CAPACITOR 10V 47U	1	
C20,21		ECUM1H103ZFN	C.CAPACITOR CH 50V 0.01U	2	
C22		ECEA1HU2R2	E.CAPACITOR 50V 2.2U	1	
C23,24		ECUM1E104ZFN	C.CAPACITOR CH 25V 0.1U	2	
C25		ECUM1H103ZFN	C.CAPACITOR CH 50V 0.01U	1	
C26		ECEA1AU470	E.CAPACITOR 10V 47U	1	
C27		ECUM1H103ZFN	C.CAPACITOR CH 50V 0.01U	1	
C28		ECEA1AU470	E.CAPACITOR 10V 47U	1	
C29		ECEA1AU330	E.CAPACITOR 10V 33U	1	
C30		ECUM1H103ZFN	C.CAPACITOR CH 50V 0.01U	1	
C31		ECEA1AU330	E.CAPACITOR 10V 33U	1	
C32		ECEA1AU470	E.CAPACITOR 10V 47U	1	
C33		ECUM1H103ZFN	C.CAPACITOR CH 50V 0.01U	1	
C34		ECEA1AU470	E.CAPACITOR 10V 47U	1	
C39		ECUM1H331JCN	C.CAPACITOR CH 50V 330P	1	
C40-42		ECUM1H103ZFN	C.CAPACITOR CH 50V 0.01U	3	
C43		ECUM1H101JCN	C.CAPACITOR CH 50V 100P	1	
C46		ECEA1CU470	E.CAPACITOR 16V 47U	1	
C47,48		ECUM1E104ZFN	C.CAPACITOR CH 25V 0.1U	2	
C101		ECQM1H104JF	P.CAPACITOR 50V 0.1U	1	
C102		ECUM1H151JCN	C.CAPACITOR CH 50V 150P	1	
C103		ECEA1CU470	E.CAPACITOR 16V 47U	1	
C104		ECEA1HU2R2	E.CAPACITOR 50V 2.2U	1	
C105		ECEA1CU101	E.CAPACITOR 16V 100U	1	
C106		ECQM1H104JF	P.CAPACITOR 50V 0.1U	1	
C107		ECUM1H151JCN	C.CAPACITOR CH 50V 150P	1	
C108		ECUM1H102JCN	C.CAPACITOR CH 50V 1000P	1	
C109		ECUM1H221JCN	C.CAPACITOR CH 50V 220P	1	
C110		ECQM1H103JF	P.CAPACITOR 50V 0.01U	1	
C111		ECEA1HU010	E.CAPACITOR 50V 1U	1	
C112		ECQM1H154JF	P.CAPACITOR 50V 0.15U	1	
C113		ECEA1HU010	E.CAPACITOR 50V 1U	1	
C114		ECEA1CU470	E.CAPACITOR 16V 47U	1	
C115		ECUM1H103ZFN	C.CAPACITOR CH 50V 0.01U	1	
C116		ECEA1CU470	E.CAPACITOR 16V 47U	1	
C117		ECUM1H103ZFN	C.CAPACITOR CH 50V 0.01U	1	
C118		ECEA1CU470	E.CAPACITOR 16V 47U	1	
C119		ECUM1H103ZFN	C.CAPACITOR CH 50V 0.01U	1	
C120		ECEA1CU470	E.CAPACITOR 16V 47U	1	
C121		ECUM1H103ZFN	C.CAPACITOR CH 50V 0.01U	1	
C122		ECEA1CU470	E.CAPACITOR 16V 47U	1	
C123		ECUM1H330JCN	C.CAPACITOR CH 50V 33P	1	
C124		ECUM1H103ZFN	C.CAPACITOR CH 50V 0.01U	1	
C125		ECEA1CU470	E.CAPACITOR 16V 47U	1	
C126		ECQM1H562JF	P.CAPACITOR 50V 5600P	1	
C127		ECQM1H393JF	P.CAPACITOR 50V 0.039U	1	
C128		ECQM1H104JF	P.CAPACITOR 50V 0.1U	1	
C129		ECEA1OM22	E.CAPACITOR 10V 22U	1	
C130		ECEA1HU010	E.CAPACITOR 50V 1U	1	

Ref.No.		Part No.	Part Name & Description	Pcs	Remarks
C131		ECEA1EN220S	E.CAPACITOR 25V 22U	1	
C132		ECQM1H103JF	P.CAPACITOR 50V 0.01U	1	
C133-36		ECUM1H103ZFN	C.CAPACITOR CH 50V 0.01U	4	
C137		ECEA1CU101	E.CAPACITOR 16V 100U	1	
C138		ECEA1CU470	E.CAPACITOR 16V 47U	1	
C139		ECQM1H822JF	P.CAPACITOR 50V 8200P	1	
C140		ECUM1H102JCN	C.CAPACITOR CH 50V 1000P	1	
C141		ECEA1HN010S	E.CAPACITOR 50V 1U	1	
C142		ECEA1CU101	E.CAPACITOR 16V 100U	1	
C143		ECEA1CU470	E.CAPACITOR 16V 47U	1	
C144		ECEA1CU220	E.CAPACITOR 16V 22U	1	
C145		ECEA1AU470	E.CAPACITOR 10V 47U	1	
C146		ECUM1H103ZFN	C.CAPACITOR CH 50V 0.01U	1	
C147		ECEA1HUR47	E.CAPACITOR 50V 0.47U	1	
C148		ECEA1CU470	E.CAPACITOR 16V 47U	1	
C149,50		ECUM1H103ZFN	C.CAPACITOR CH 50V 0.01U	2	
C151		ECEA1HN010S	E.CAPACITOR 50V 1U	1	
C152,53		ECUM1H103ZFN	C.CAPACITOR CH 50V 0.01U	2	
C154		ECUM1H152KBN	C.CAPACITOR CH 50V 1500P	1	
C155		ECEA1HN100S	E.CAPACITOR 50V 10U	1	
C156		ECEA1HUR47	E.CAPACITOR 50V 0.47U	1	
C157,58		ECUM1H103ZFN	C.CAPACITOR CH 50V 0.01U	2	
C159		ECQM1H104JF	P.CAPACITOR 50V 0.1U	1	
C160		ECUM1H103ZFN	C.CAPACITOR CH 50V 0.01U	1	
C161		ECQM1H104JF	P.CAPACITOR 50V 0.1U	1	
C162,63		ECQM1H103JF	P.CAPACITOR 50V 0.01U	2	
C164		ECEA1HU4R7	E.CAPACITOR 50V 4.7U	1	
C165-67		ECUM1H103ZFN	C.CAPACITOR CH 50V 0.01U	3	
C168		ECEA1EU100	E.CAPACITOR 25V 10U	1	
C169		ECQM1H103JF	P.CAPACITOR 50V 0.01U	1	
C170		ECUM1H471JCN	C.CAPACITOR CH 50V 470P	1	
C171,72		ECUM1H103ZFN	C.CAPACITOR CH 50V 0.01U	2	
C173		ECUM1H101JCN	C.CAPACITOR CH 50V 100P	1	
C174		ECUM1H103ZFN	C.CAPACITOR CH 50V 0.01U	1	
C175		ECEA1HU2R2	E.CAPACITOR 50V 2.2U	1	
C176		ECEA1CU470	E.CAPACITOR 16V 47U	1	
C177		ECQM1H222JF	P.CAPACITOR 50V 2200P	1	
C179		ECUM1H221JCN	C.CAPACITOR CH 50V 220P	1	
C301		ECEA1AU330	E.CAPACITOR 10V 33U	1	
C302		ECUM1H103ZFN	C.CAPACITOR CH 50V 0.01U	1	
C303		ECQM1H562JF	P.CAPACITOR 50V 5600P	1	
C304		ECQM1H392JF	P.CAPACITOR 50V 3900P	1	
C305		ECUM1H103ZFN	C.CAPACITOR CH 50V 0.01U	1	
C306		ECQM1H123JF	P.CAPACITOR 50V 0.012U	1	
C307		ECEA1CN470S	E.CAPACITOR 16V 47U	1	
C308		ECEA0JU221	E.CAPACITOR 6.3V 220U	1	
C309		ECEA1HU2R2	E.CAPACITOR 50V 2.2U	1	
C310		ECQM1H104JF	P.CAPACITOR 50V 0.1U	1	
C311		ECUM1H153KBN	C.CAPACITOR CH 50V 0.015U	1	
C312		ECEA1HN010S	E.CAPACITOR 50V 1U	1	
C313,14		ECUM1H103ZFN	C.CAPACITOR CH 50V 0.01U	2	
C315		ECQM1H104JF	P.CAPACITOR 50V 0.1U	1	
C316		ECUM1E273KBN	C.CAPACITOR CH 25V 0.027U	1	
C317		ECEA1HN2R2S	E.CAPACITOR 50V 2.2U	1	
C318-20		ECUM1H103ZFN	C.CAPACITOR CH 50V 0.01U	3	
C321		ECEA1CU100	E.CAPACITOR 16V 10U	1	
C322		ECEA0JU470	E.CAPACITOR 6.3V 47U	1	
C323		ECUM1H103ZFN	C.CAPACITOR CH 50V 0.01U	1	
C324		ECEA0JU102	E.CAPACITOR 6.3V 1000U	1	
C327		ECEA1HU2R2	E.CAPACITOR 50V 2.2U	1	
C330-36		ECUM1H103ZFN	C.CAPACITOR CH 50V 0.01U	7	
C338,39		ECEA1CU100	E.CAPACITOR 16V 10U	2	
C342		ECQM1H104JF	P.CAPACITOR 50V 0.1U	1	
C401-03		ECUM1H103ZFN	C.CAPACITOR CH 50V 0.01U	3	
C406-10		ECUM1H103ZFN	C.CAPACITOR CH 50V 0.01U	5	
C454		ECUM1H103ZFN	C.CAPACITOR CH 50V 0.01U	1	
C492		ECUM1H103ZFN	C.CAPACITOR CH 50V 0.01U	1	
C495,96		ECUM1H103ZFN	C.CAPACITOR CH 50V 0.01U	2	
C501		ECUM1H103ZFN	C.CAPACITOR CH 50V 0.01U	1	
C502		ECEA1CU470	E.CAPACITOR 16V 47U	1	
C503		ECEA1ESS471	E.CAPACITOR 25V 470U	1	
C504		ECUM1E473KBN	C.CAPACITOR CH 25V 0.047U	1	
C505		ECUM1H561JCN	C.CAPACITOR CH 50V 560P	1	
C506		ECUM1H820JCN	C.CAPACITOR CH 50V 82P	1	
C507		ECUM1H561JCN	C.CAPACITOR CH 50V 560P	1	

Refer to the P.C.BOARDS LIST, page 6-1-1, before using this page.

Ref.No.		Part No.	Part Name & Description	Pcs	Remarks
C508		ECEA1HU010	E.CAPACITOR 50V 1U	1	
C509-13		ECEA1ESS101	E.CAPACITOR 25V 100U	5	
C514		ECQM1H104JF	P.CAPACITOR 50V 0.1U	1	
C515		ECEA1EU4R7	E.CAPACITOR 25V 4.7U	1	
C516-18		ECEA1HN4R7S	E.CAPACITOR 50V 4.7U	3	
C519		ECEA1HU010	E.CAPACITOR 50V 1U	1	
C520-22		ECUM1H103KBN	C.CAPACITOR CH 50V 0.01U	3	
C523		ECQM1H104JF	P.CAPACITOR 50V 0.1U	1	
C524		ECEA1EU4R7	E.CAPACITOR 25V 4.7U	1	
C525,26		ECEA1HN4R7S	E.CAPACITOR 50V 4.7U	2	
C527		ECQM1H104JF	P.CAPACITOR 50V 0.1U	1	
C528		ECEA1HU010	E.CAPACITOR 50V 1U	1	
C529-31		ECUM1H103KBN	C.CAPACITOR CH 50V 0.01U	3	
C532		ECEA1EU4R7	E.CAPACITOR 25V 4.7U	1	
C533,34		ECEA1HN4R7S	E.CAPACITOR 50V 4.7U	2	
C535		ECQM1H104JF	P.CAPACITOR 50V 0.1U	1	
C536		ECEA1HU010	E.CAPACITOR 50V 1U	1	
C537-39		ECUM1H103KBN	C.CAPACITOR CH 50V 0.01U	3	
C540		ECEA1EU4R7	E.CAPACITOR 25V 4.7U	1	
C541-43		ECEA1HN4R7S	E.CAPACITOR 50V 4.7U	3	
C544		ECQM1H104JF	P.CAPACITOR 50V 0.1U	1	
C545		ECEA1HU010	E.CAPACITOR 50V 1U	1	
C546-48		ECUM1H103KBN	C.CAPACITOR CH 50V 0.01U	3	
C549		ECEA1AU470	E.CAPACITOR 10V 47U	1	
C550		ECUM1E473KBN	C.CAPACITOR CH 25V 0.047U	1	
C551		ECEA1HN4R7S	E.CAPACITOR 50V 4.7U	1	
C552		ECQM1H104JF	P.CAPACITOR 50V 0.1U	1	
C553		ECEA1HN4R7S	E.CAPACITOR 50V 4.7U	1	
C558-63		ECQM1H104JF	P.CAPACITOR 50V 0.1U	6	
C600		ECUM1H680JCN	C.CAPACITOR CH 50V 68P	1	
C601		ECUM1H050DCN	C.CAPACITOR CH 50V 50P	1	
C602		ECUM1H680JCN	C.CAPACITOR CH 50V 68P	1	
C603		ECUM1H050DCN	C.CAPACITOR CH 50V 50P	1	
C900-11		ECUM1H103ZFN	C.CAPACITOR CH 50V 0.01U	12	
D1		MA151K	DIODE	1	
D4		MA151K	DIODE	1	
D101		MA151K	DIODE	1	
D102		MA153	DIODE	1	
D103		MA151WK	DIODE	1	
D104		MA151K	DIODE	1	
D105		MA151WK	DIODE	1	
D106,07		MA151WA	DIODE	2	
D108		MA151K	DIODE	1	
D109		MA151WK	DIODE	1	
D110,11		MA153	DIODE	2	
D112		MA151WK	DIODE	1	
D113,14		MA151K	DIODE	2	
D115		MA153	DIODE	1	
D116		MA151K	DIODE	1	
D119		MA151WK	DIODE	1	
D120-22		MA151WA	DIODE	3	
D123		MA151K	DIODE	1	
D125		MA151K	DIODE	1	
D126,27		MA153	DIODE	2	
D128		MA151WA	DIODE	1	
D129		MA151K	DIODE	1	
D301,02		MA151K	DIODE	2	
D303		MA151WK	DIODE	1	
D304		MA151WA	DIODE	1	
D305		MA151K	DIODE	1	
D307		MA151WA	DIODE	1	
D309		MA151WK	DIODE	1	
D310		MA151K	DIODE	1	
D313		MA151WA	DIODE	1	
D314-17		MA151WK	DIODE	4	
D318		MA151K	DIODE	1	
D319,20		MA151WK	DIODE	2	
D321,22		MA151K	DIODE	2	
D323,24		MA151WK	DIODE	2	
D325		MA151K	DIODE	1	
D330		MA151K	DIODE	1	
D333		MA151WK	DIODE	1	

Ref.No.		Part No.	Part Name & Description	Pcs	Remarks
D334-36		MA151K	DIODE	3	
D337		ERJ6GEYJ824	M.RESISTOR CH 1/10W 820K	1	
D338		MA151K	DIODE	1	
D340		MA151WA	DIODE	1	
D341		MA151K	DIODE	1	
D345,46		MA151WA	DIODE	2	
D349		MA151WK	DIODE	1	
D351		MA151K	DIODE	1	
D501		MA151K	DIODE	1	
D502		MA151WK	DIODE	1	
D503		MA153	DIODE	1	
D504		MA151WK	DIODE	1	
D505,06		MA151K	DIODE	2	
D507		MA151WK	DIODE	1	
D508,09		MA151K	DIODE	2	
D510		MA151WK	DIODE	1	
D511		MA151K	DIODE	1	
D514-17		MA701A	DIODE	4	
D572		MA151K	DIODE	1	
IC1		LM2904M	IC	1	
IC2		LM2903M	IC	1	
IC3		LM2904M	IC	1	
IC4		NJM4558M	IC	1	
IC5		MC14538BF	IC	1	
IC6		UPD65031F405	IC	1	
IC7		MN53015VZW	IC	1	
IC8		MC14049UBF	IC	1	
IC9		MC14013BF	IC	1	
IC10		MM74HC221AM	IC	1	
IC11		AN78L05	IC	1	
IC12		MC14021BF	IC	1	
IC13		MC14094BF	IC	1	
IC14		MC14053BF	IC	1	(R)
IC15		MC14049UBF	IC	1	
IC16		MC14050BF	IC	1	
IC17		SN74LS01NS	IC	1	
IC18		MN51020VZZ	IC	1	
IC101		LM2904M	IC	1	
IC102		LM2903M	IC	1	
IC103		LM2904M	IC	1	
IC104		MC14538BF	IC	1	
IC105		AN79L09	IC	1	
IC106		AN78N09	IC	1	
IC107		DN74LS293S	IC	1	
IC108		MC74HC00AF	IC	1	
IC109		MN6064R	IC	1	
IC110		MN6168VIA	IC	1	
IC111		MC74HCU04F	IC	1	
IC112		MC14049UBF	IC	1	
IC113,14		LM2904M	IC	2	
IC115		LM2903M	IC	1	
IC116,17		LM2904M	IC	2	
IC118-20		MC14066BF	IC	3	
IC121		MC14052BF	IC	1	
IC122,23		MC14053BF	IC	2	(R)
IC124		MN53030VYA	IC	1	
IC125		MN53007VYC	IC	1	
IC126		UPC4558G	IC	1	
IC128		NJM4558M	IC	1	
IC129		MC14538BF	IC	1	
IC130		MC14013BF	IC	1	
IC131		LM2904M	IC	1	
IC132		UPC4558G	IC	1	
IC133		MN4030BS	IC	1	
IC134		MC14538BF	IC	1	
IC135		MC14053BF	IC	1	(R)
IC136		MC74HC02AF	IC	1	
IC137		MC14538BF	IC	1	
IC301		AN78L05	IC	1	
IC302		LM2904M	IC	1	
IC303		LM2902M	IC	1	
IC304		MC14053BF	IC	1	(R)

Refer to the P.C.BOARDS LIST, page 6-1-1, before using this page.

Ref.No.		Part No.	Part Name & Description	Pcs	Remarks
IC305		MC14066BF	IC	1	
IC306		LM2904M	IC	1	
IC307		LM2902M	IC	1	
IC308,09		LM2904M	IC	2	
IC310-13		MC14066BF	IC	4	
IC314		MC14028BF	IC	1	
IC315		MC14081BF	IC	1	
IC316		NJM2901M	IC	1	
IC318		MC14538BF	IC	1	
IC319		MC14049UBF	IC	1	
IC501		BA6149LS	IC	1	
IC502		PU4213	IC	1	
IC503-06		AN3821K	IC	4	
IC600,01		MC74HCU04F	IC	2	
IC800		LM2904M	IC	1	
L1		VLP0017	COIL	1	
L2-L4		VLQEL05S221J	COIL 220UH	3	
L101,02		VLQEL05S221J	COIL 220UH	2	
L501		VLQ0214	COIL 50UH	1	
L504-07		VLQ0129	COIL 300UH	4	
Q1,Q2		UN2213	TRANSISTOR-RESISTOR	2	
Q5-Q9		UN2213	TRANSISTOR-RESISTOR	5	
Q12-16		UN2213	TRANSISTOR-RESISTOR	5	
Q101		2SD601	TRANSISTOR CHIP	1	(Q,R)
Q102		UN2213	TRANSISTOR-RESISTOR	1	
Q103		2SJ43	TRANSISTOR	1	
Q104		UN2213	TRANSISTOR-RESISTOR	1	
Q105		2SD601	TRANSISTOR CHIP	1	(Q,R)
Q106-08		UN2213	TRANSISTOR-RESISTOR	3	
Q109		2SD601	TRANSISTOR CHIP	1	(Q,R)
Q110-19		UN2213	TRANSISTOR-RESISTOR	10	
Q120		2SD601	TRANSISTOR CHIP	1	(Q,R)
Q121		UN2213	TRANSISTOR-RESISTOR	1	
Q122		2SD601	TRANSISTOR CHIP	1	(Q,R)
Q123,24		UN2213	TRANSISTOR-RESISTOR	2	
Q125		2SB709	TRANSISTOR CHIP	1	(Q,R)
Q126		2SD601	TRANSISTOR CHIP	1	(Q,R)
Q127		UN2115	COMBINATION PARTS	1	
Q128		UN2213	TRANSISTOR-RESISTOR	1	
Q129		UN2214	TRANSISTOR-RESISTOR	1	
Q130		2SK374	TRANSISTOR	1	
Q131-33		UN2213	TRANSISTOR-RESISTOR	3	
Q134,35		2SB709	TRANSISTOR CHIP	2	(Q,R)
Q136-39		UN2213	TRANSISTOR-RESISTOR	4	
Q301,02		UN2213	TRANSISTOR-RESISTOR	2	
Q303		UN2113	TRANSISTOR-RESISTOR	1	
Q304		UN2213	TRANSISTOR-RESISTOR	1	
Q305		UN2113	TRANSISTOR-RESISTOR	1	
Q306-09		UN2213	TRANSISTOR-RESISTOR	4	
Q312-14		UN2213	TRANSISTOR-RESISTOR	3	
Q316		2SD601	TRANSISTOR CHIP	1	(Q,R)
Q317		UN2213	TRANSISTOR-RESISTOR	1	
Q319		2SD601	TRANSISTOR CHIP	1	(Q,R)
Q320		UN2213	TRANSISTOR-RESISTOR	1	
Q336,37		UN2213	TRANSISTOR-RESISTOR	2	
Q340		UN2213	TRANSISTOR-RESISTOR	1	
Q343		UN2213	TRANSISTOR-RESISTOR	1	
Q346,47		UN2213	TRANSISTOR-RESISTOR	2	
Q501-04		2SB709	TRANSISTOR CHIP	4	(Q,R)
Q505		UN2113	TRANSISTOR-RESISTOR	1	
Q506		UN2213	TRANSISTOR-RESISTOR	1	
Q507		UN2113	TRANSISTOR-RESISTOR	1	
Q508,09		UN2213	TRANSISTOR-RESISTOR	2	
			RESISTORS		
R1		ERJ6GEYJ103	M.RESISTOR CH 1/10W 10K	1	
R2		ERJ6GEYJ683	M.RESISTOR CH 1/10W 68K	1	

Ref.No.		Part No.	Part Name & Description	Pcs	Remarks
R3		ERJ6GEYJ103	M.RESISTOR CH 1/10W 10K	1	
R4		ERJ6GEYJ105	M.RESISTOR CH 1/10W 1M	1	
R5,R6		ERJ6GEYJ103	M.RESISTOR CH 1/10W 10K	2	
R7		ERJ6GEYJ155	M.RESISTOR CH 1/10W 1.5M	1	
R8		ERJ6GEYJ103	M.RESISTOR CH 1/10W 10K	1	
R9		ERJ6GEYJ125	M.RESISTOR CH 1/10W 1.2M	1	
R10		ERJ6GEYJ563	M.RESISTOR CH 1/10W 56K	1	
R11,12		VRE0034E102	M.RESISTOR CH 1/10W 1K	2	
R13		ERJ6GEYJ123	M.RESISTOR CH 1/10W 12K	1	
R14		ERJ6GEYJ823	M.RESISTOR CH 1/10W 82K	1	
R15		ERJ6GEYJ393	M.RESISTOR CH 1/10W 39K	1	
R16		ERJ6GEYJ824	M.RESISTOR CH 1/10W 820K	1	
R17		ERJ6GEYJ822	M.RESISTOR CH 1/10W 8.2K	1	
R18		ERJ6GEYJ183	M.RESISTOR CH 1/10W 18K	1	
R19		ERJ6GEYJ882	M.RESISTOR CH1/10W 8.8K	1	
R20		ERJ6GEYJ822	M.RESISTOR CH 1/10W 8.2K	1	
R21		ERJ6GEYJ104	M.RESISTOR CH 1/10W 100K	1	
R22		ERJ6GEYJ472	M.RESISTOR CH 1/10W 4.7K	1	
R23		ERJ6GEYJ103	M.RESISTOR CH 1/10W 10K	1	
R24		ERJ6GEYJ563	M.RESISTOR CH 1/10W 56K	1	
R25		ERJ6GEYJ102	M.RESISTOR CH 1/10W 1K	1	
R27		ERJ6GEYJ123	M.RESISTOR CH 1/10W 12K	1	
R28-31		ERJ6GEYJ563	M.RESISTOR CH 1/10W 56K	4	
R34,35		ERJ6GEYJ103	M.RESISTOR CH 1/10W 10K	2	
R36		ERJ6GEYJ562	M.RESISTOR CH 1/10W 5.6K	1	
R37-44		ERJ6GEYJ563	M.RESISTOR CH 1/10W 56K	8	
R45		ERJ6GEYJ104	M.RESISTOR CH 1/10W 100K	1	
R50		ERJ6GEYJ563	M.RESISTOR CH 1/10W 56K	1	
R51		ERJ6GEYJ103	M.RESISTOR CH 1/10W 10K	1	
R52		ERJ6GEYJ474	M.RESISTOR CH 1/10W 470K	1	
R53		ERJ6GEYJ563	M.RESISTOR CH 1/10W 56K	1	
R54		ERJ6GEYJ103	M.RESISTOR CH 1/10W 10K	1	
R55		ERJ6GEYJ474	M.RESISTOR CH 1/10W 470K	1	
R56		ERJ6GEYJ563	M.RESISTOR CH 1/10W 56K	1	
R57		ERJ6GEYJ103	M.RESISTOR CH 1/10W 10K	1	
R58		ERJ6GEYJ474	M.RESISTOR CH 1/10W 470K	1	
R59		ERJ6GEYJ103	M.RESISTOR CH 1/10W 10K	1	
R60		ERJ6GEYJ102	M.RESISTOR CH 1/10W 1K	1	
R61		ERJ6GEYJ223	M.RESISTOR CH 1/10W 22K	1	
R62		ERJ6GEYJ103	M.RESISTOR CH 1/10W 10K	1	
R64		ERJ6GEYJ153	M.RESISTOR CH 1/10W 15K	1	
R65		ERJ6GEYJ683	M.RESISTOR CH 1/10W 68K	1	
R69,70		ERJ6GEYJ102	M.RESISTOR CH 1/10W 1K	2	
R101		ERJ6GEYJ103	M.RESISTOR CH 1/10W 10K	1	
R102		ERJ6GEYJ184	M.RESISTOR CH 1/10W 180K	1	
R103		ERJ6GEYJ102	M.RESISTOR CH 1/10W 1K	1	
R104		ERJ6GEYJ474	M.RESISTOR CH 1/10W 470K	1	
R105-07		ERJ6GEYJ103	M.RESISTOR CH 1/10W 10K	3	
R108		ERJ6GEYJ184	M.RESISTOR CH 1/10W 180K	1	
R109		ERJ6GEYJ102	M.RESISTOR CH 1/10W 1K	1	
R110		ERJ6GEYJ474	M.RESISTOR CH 1/10W 470K	1	
R111		ERJ6GEYJ103	M.RESISTOR CH 1/10W 10K	1	
R112		ERJ6GEYJ153	M.RESISTOR CH 1/10W 15K	1	
R113		ERJ6GEYJ562	M.RESISTOR CH 1/10W 5.6K	1	
R114		ERJ6GEYJ224	M.RESISTOR CH 1/10W 220K	1	
R115		ERJ6GEYJ682	M.RESISTOR CH 1/10W 6.8K	1	
R116		ERJ6GEYJ153	M.RESISTOR CH 1/10W 15K	1	
R117		ERJ6GEYJ104	M.RESISTOR CH 1/10W 100K	1	
R118		ERJ6GEYJ103	M.RESISTOR CH 1/10W 10K	1	
R119		ERJ6GEYJ153	M.RESISTOR CH 1/10W 15K	1	
R120-22		ERJ6GEYJ103	M.RESISTOR CH 1/10W 10K	3	
R123		ERJ6GEYJ105	M.RESISTOR CH 1/10W 1M	1	
R124		ERJ6GEYJ272	M.RESISTOR CH 1/10W 2.7K	1	
R125		ERJ6GEYJ103	M.RESISTOR CH 1/10W 10K	1	
R126-32		ERJ6GEYJ563	M.RESISTOR CH 1/10W 56K	7	
R133,34		ERJ6GEYJ103	M.RESISTOR CH 1/10W 10K	2	
R135,36		ERJ6GEYJ563	M.RESISTOR CH 1/10W 56K	2	
R137		ERJ6GEYJ103	M.RESISTOR CH 1/10W 10K	1	
R138		ERJ6GEYJ563	M.RESISTOR CH 1/10W 56K	1	
R139		ERJ6GEYJ224	M.RESISTOR CH 1/10W 220K	1	
R140		ERJ6GEYJ563	M.RESISTOR CH 1/10W 56K	1	
R141		ERJ6GEYJ224	M.RESISTOR CH 1/10W 220K	1	
R142		ERJ6GEYJ563	M.RESISTOR CH 1/10W 56K	1	
R143		ERJ6GEYJ223	M.RESISTOR CH 1/10W 22K	1	
R144		ERJ6GEYJ103	M.RESISTOR CH 1/10W 10K	1	

Refer to the P.C.BOARDS LIST, page 6-1-1, before using this page.

Ref.No.		Part No.	Part Name & Description	Pcs	Remarks
R145		ERJ6GEYJ563	M.RESISTOR CH 1/10W 56K	1	
R146		ERJ6GEYJ562	M.RESISTOR CH 1/10W 5.6K	1	
R147,48		ERJ6GEYJ273	M.RESISTOR CH 1/10W 27K	2	
R149		ERJ6GEYJ104	M.RESISTOR CH 1/10W 100K	1	
R150		ERJ6GEYJ183	M.RESISTOR CH 1/10W 18K	1	
R151		ERJ6GEYJ103	M.RESISTOR CH 1/10W 10K	1	
R152		ERJ6GEYJ824	M.RESISTOR CH 1/10W 820K	1	
R153		ERJ6GEYJ562	M.RESISTOR CH 1/10W 5.6K	1	
R154-56		ERJ6GEYJ393	M.RESISTOR CH 1/10W 39K	3	
R157,58		ERJ6GEYJ183	M.RESISTOR CH 1/10W 18K	2	
R159		ERJ6GEYJ682	M.RESISTOR CH 1/10W 6.8K	1	
R160		ERJ6GEYJ183	M.RESISTOR CH 1/10W 18K	1	
R161		ERJ6GEYJ103	M.RESISTOR CH 1/10W 10K	1	
R162		ERJ6GEYJ563	M.RESISTOR CH 1/10W 56K	1	
R163		ERJ6GEYJ103	M.RESISTOR CH 1/10W 10K	1	
R164		ERJ6GEYJ562	M.RESISTOR CH 1/10W 5.6K	1	
R165		ERJ6GEYJ563	M.RESISTOR CH 1/10W 56K	1	
R166		ERJ6GEYJ272	M.RESISTOR CH 1/10W 2.7K	1	
R167		ERJ6GEYJ333	M.RESISTOR CH 1/10W 33K	1	
R168		ERJ6GEYJ473	M.RESISTOR CH 1/10W 47K	1	
R169		ERJ6GEYJ183	M.RESISTOR CH 1/10W 18K	1	
R170,71		ERJ6GEYJ563	M.RESISTOR CH 1/10W 56K	2	
R172		ERJ6GEYJ102	M.RESISTOR CH 1/10W 1K	1	
R181,82		ERJ6GEYJ563	M.RESISTOR CH 1/10W 56K	2	
R183		ERJ6GEYJ102	M.RESISTOR CH 1/10W 1K	1	
R184		ERJ6GEYJ563	M.RESISTOR CH 1/10W 56K	1	
R185		ERJ6GEYJ104	M.RESISTOR CH 1/10W 100K	1	
R186		ERJ6GEYJ102	M.RESISTOR CH 1/10W 1K	1	
R187,88		ERJ6GEYJ822	M.RESISTOR CH 1/10W 8.2K	2	
R189		ERJ6GEYJ561	M.RESISTOR CH 1/10W 560	1	
R190		ERJ6GEYJ472	M.RESISTOR CH 1/10W 4.7K	1	
R191,92		ERJ6GEYJ563	M.RESISTOR CH 1/10W 56K	2	
R193,94		ERJ6GEYJ273	M.RESISTOR CH 1/10W 27K	2	
R195		ERJ6GEYJ562	M.RESISTOR CH 1/10W 5.6K	1	
R196		ERJ6GEYJ153	M.RESISTOR CH 1/10W 15K	1	
R197		ERJ6GEYJ332	M.RESISTOR CH 1/10W 3.3K	1	
R198		ERJ6GEYJ561	M.RESISTOR CH 1/10W 560	1	
R199		ERJ6GEYJ273	M.RESISTOR CH 1/10W 27K	1	
R200		ERJ6GEYJ223	M.RESISTOR CH 1/10W 22K	1	
R201		ERJ6GEYJ473	M.RESISTOR CH 1/10W 47K	1	
R202		ERJ6GEYJ562	M.RESISTOR CH 1/10W 5.6K	1	
R203		ERJ6GEYJ561	M.RESISTOR CH 1/10W 560	1	
R204		ERJ6GEYJ562	M.RESISTOR CH 1/10W 5.6K	1	
R205		ERJ6GEYJ101	M.RESISTOR CH 1/10W 100	1	
R206		ERJ6GEYJ104	M.RESISTOR CH 1/10W 100K	1	
R207-09		ERJ6GEYJ102	M.RESISTOR CH 1/10W 1K	3	
R210		ERJ6GEYJ153	M.RESISTOR CH 1/10W 15K	1	
R211		ERJ6GEYJ183	M.RESISTOR CH 1/10W 18K	1	
R212		ERJ6GEYJ683	M.RESISTOR CH 1/10W 68K	1	
R213-15		ERJ6GEYJ563	M.RESISTOR CH 1/10W 56K	3	
R216		ERJ6GEYJ105	M.RESISTOR CH 1/10W 1M	1	
R218		ERJ6GEYJ563	M.RESISTOR CH 1/10W 56K	1	
R219		ERJ6GEYJ103	M.RESISTOR CH 1/10W 10K	1	
R220		ERJ6GEYJ104	M.RESISTOR CH 1/10W 100K	1	
R222-27		ERJ6GEYJ563	M.RESISTOR CH 1/10W 56K	6	
R228		ERJ6GEYJ104	M.RESISTOR CH 1/10W 100K	1	
R229		ERJ6GEYJ223	M.RESISTOR CH 1/10W 22K	1	
R230		ERJ6GEYJ563	M.RESISTOR CH 1/10W 56K	1	
R231		ERJ6GEYJ104	M.RESISTOR CH 1/10W 100K	1	
R232		VRE0034E272	M.RESISTOR CH 1/10W 2.7K	1	
R233		VRE0034E104	M.RESISTOR CH 1/10W 100K	1	
R234		VRE0034E272	M.RESISTOR CH 1/10W 2.7K	1	
R235		VRE0034E104	M.RESISTOR CH 1/10W 100K	1	
R236		ERJ6GEYJ563	M.RESISTOR CH 1/10W 56K	1	
R237		ERJ6GEYJ824	M.RESISTOR CH 1/10W 820K	1	
R238		ERJ6GEYJ102	M.RESISTOR CH 1/10W 1K	1	
R239		ERJ6GEYJ103	M.RESISTOR CH 1/10W 10K	1	
R240		ERJ6GEYJ222	M.RESISTOR CH 1/10W 2.2K	1	
R241		ERJ6GEYJ104	M.RESISTOR CH 1/10W 100K	1	
R242		ERJ6GEYJ334	M.RESISTOR CH 1/10W 330K	1	
R243		ERJ6GEYJ101	M.RESISTOR CH 1/10W 100	1	
R244,45		ERJ6GEYJ103	M.RESISTOR CH 1/10W 10K	2	
R246		ERJ6GEYJ102	M.RESISTOR CH 1/10W 1K	1	
R247		ERJ6GEYJ103	M.RESISTOR CH 1/10W 10K	1	
R248		ERJ6GEYJ562	M.RESISTOR CH 1/10W 5.6K	1	

Ref.No.		Part No.	Part Name & Description	Pcs	Remarks
R249		ERJ6GEYJ392	M.RESISTOR CH 1/10W 3.9K	1	
R250		ERJ6GEYJ184	M.RESISTOR CH 1/10W 180K	1	
R251		ERJ6GEYJ224	M.RESISTOR CH 1/10W 220K	1	
R252		ERJ6GEYJ153	M.RESISTOR CH 1/10W 15K	1	
R253		ERJ6GEYJ564	M.RESISTOR CH 1/10W 560K	1	
R254-58		ERJ6GEYJ103	M.RESISTOR CH 1/10W 10K	5	
R259		ERJ6GEYJ223	M.RESISTOR CH 1/10W 22K	1	
R260		ERJ6GEYJ393	M.RESISTOR CH 1/10W 39K	1	
R261		ERJ6GEYJ823	M.RESISTOR CH 1/10W 82K	1	
R262		ERJ6GEYJ123	M.RESISTOR CH 1/10W 12K	1	
R263		ERJ6GEYJ183	M.RESISTOR CH 1/10W 18K	1	
R264		ERJ6GEYJ333	M.RESISTOR CH 1/10W 33K	1	
R265		ERJ6GEYJ683	M.RESISTOR CH 1/10W 68K	1	
R266-69		ERJ6GEYJ563	M.RESISTOR CH 1/10W 56K	4	
R270		ERJ6GEYJ562	M.RESISTOR CH 1/10W 5.6K	1	
R271		ERJ6GEYJ103	M.RESISTOR CH 1/10W 10K	1	
R273		ERJ6GEYJ393	M.RESISTOR CH 1/10W 39K	1	
R274		ERJ6GEYJ181	M.RESISTOR CH 1/10W 180	1	
R275		ERJ6GEYJ563	M.RESISTOR CH 1/10W 56K	1	
R276,77		VRE0034E102	M.RESISTOR CH 1/10W 1K	2	
R278		ERJ6GEYJ472	M.RESISTOR CH 1/10W 4.7K	1	
R279-81		ERJ6GEYJ563	M.RESISTOR CH 1/10W 56K	3	
R282		ERJ6GEYJ124	M.RESISTOR CH 1/10W 120K	1	
R283		ERJ6GEYJ103	M.RESISTOR CH 1/10W 10K	1	
R284		ERJ6GEYJ272	M.RESISTOR CH 1/10W 2.7K	1	
R285		ERJ6GEYJ122	M.RESISTOR CH 1/10W 1.2K	1	
R286,87		ERJ6GEYJ472	M.RESISTOR CH 1/10W 4.7K	2	
R288		ERJ6GEYJ473	M.RESISTOR CH 1/10W 47K	1	
R289		ERJ6GEYJ823	M.RESISTOR CH 1/10W 82K	1	
R301		ERJ6GEYJ563	M.RESISTOR CH 1/10W 56K	1	
R302,03		ERJ6GEYJ103	M.RESISTOR CH 1/10W 10K	2	
R304		ERJ6GEYJ563	M.RESISTOR CH 1/10W 56K	1	
R305		ERJ6GEYJ104	M.RESISTOR CH 1/10W 100K	1	
R306		ERJ6GEYJ683	M.RESISTOR CH 1/10W 68K	1	
R307		ERJ6GEYJ223	M.RESISTOR CH 1/10W 22K	1	
R308		ERJ6GEYJ103	M.RESISTOR CH 1/10W 10K	1	
R309		ERJ6GEYJ472	M.RESISTOR CH 1/10W 4.7K	1	
R310		ERJ6GEYJ822	M.RESISTOR CH 1/10W 8.2K	1	
R311		ERJ6GEYJ392	M.RESISTOR CH 1/10W 3.9K	1	
R312		ERJ6GEYJ153	M.RESISTOR CH 1/10W 15K	1	
R313		ERJ6GEYJ332	M.RESISTOR CH 1/10W 3.3K	1	
R314		ERJ6GEYJ151	M.RESISTOR CH 1/10W 150	1	
R315,16		ERJ6GEYJ103	M.RESISTOR CH 1/10W 10K	2	
R317		ERJ6GEYJ683	M.RESISTOR CH 1/10W 68K	1	
R318		ERJ6GEYJ103	M.RESISTOR CH 1/10W 10K	1	
R319		ERJ6GEYJ273	M.RESISTOR CH 1/10W 27K	1	
R320		ERJ6GEYJ104	M.RESISTOR CH 1/10W 100K	1	
R321		ERJ6GEYJ223	M.RESISTOR CH 1/10W 22K	1	
R322		ERJ6GEYJ563	M.RESISTOR CH 1/10W 56K	1	
R325,26		VRE0034E332	M.RESISTOR CH 1/10W 3.3K	2	
R327		ERJ6GEYJ223	M.RESISTOR CH 1/10W 22K	1	
R328		ERJ6GEYJ104	M.RESISTOR CH 1/10W 100K	1	
R329		ERJ6GEYJ393	M.RESISTOR CH 1/10W 39K	1	
R330		ERJ6GEYJ334	M.RESISTOR CH 1/10W 330K	1	
R331		ERJ6GEYJ474	M.RESISTOR CH 1/10W 470K	1	
R332,33		ERJ6GEYJ104	M.RESISTOR CH 1/10W 100K	2	
R334		ERJ6GEYJ105	M.RESISTOR CH 1/10W 1M	1	
R335		ERJ6GEYJ684	M.RESISTOR CH 1/10W 680K	1	
R336		ERJ6GEYJ473	M.RESISTOR CH 1/10W 47K	1	
R337,38		ERJ6GEYJ103	M.RESISTOR CH 1/10W 10K	2	
R339,40		VRE0034E332	M.RESISTOR CH 1/10W 3.3K	2	
R341		ERJ6GEYJ223	M.RESISTOR CH 1/10W 22K	1	
R342		ERJ6GEYJ104	M.RESISTOR CH 1/10W 100K	1	
R343		ERJ6GEYJ473	M.RESISTOR CH 1/10W 47K	1	
R344		ERJ6GEYJ334	M.RESISTOR CH 1/10W 330K	1	
R345		ERJ6GEYJ474	M.RESISTOR CH 1/10W 470K	1	
R346		ERJ6GEYJ104	M.RESISTOR CH 1/10W 100K	1	
R347		ERJ6GEYJ105	M.RESISTOR CH 1/10W 1M	1	
R348		ERJ6GEYJ684	M.RESISTOR CH 1/10W 680K	1	
R349,50		ERJ6GEYJ103	M.RESISTOR CH 1/10W 10K	2	
R351		ERJ6GEYJ472	M.RESISTOR CH 1/10W 4.7K	1	
R352-55		ERJ6GEYJ103	M.RESISTOR CH 1/10W 10K	4	
R356		ERJ6GEYJ222	M.RESISTOR CH 1/10W 2.2K	1	
R357		ERJ6GEYJ223	M.RESISTOR CH 1/10W 22K	1	
R358		ERJ6GEYJ104	M.RESISTOR CH 1/10W 100K	1	

Refer to the P.C.BOARDS LIST, page 6-1-1, before using this page.

Ref.No.		Part No.	Part Name & Description	Pcs	Remarks
R359,60		ERJ6GEYJ103	M.RESISTOR CH 1/10W 10K	2	
R362,63		ERJ6GEYJ103	M.RESISTOR CH 1/10W 10K	2	
R365		ERJ6GEYJ104	M.RESISTOR CH 1/10W 100K	1	
R366		ERJ6GEYJ103	M.RESISTOR CH 1/10W 10K	1	
R367,68		ERJ6GEYJ563	M.RESISTOR CH 1/10W 56K	2	
R369		ERJ6GEYJ104	M.RESISTOR CH 1/10W 100K	1	
R370,71		ERJ6GEYJ103	M.RESISTOR CH 1/10W 10K	2	
R373,74		ERJ6GEYJ103	M.RESISTOR CH 1/10W 10K	2	
R376		ERJ6GEYJ104	M.RESISTOR CH 1/10W 100K	1	
R378,79		ERJ6GEYJ563	M.RESISTOR CH 1/10W 56K	2	
R380		ERJ6GEYJ103	M.RESISTOR CH 1/10W 10K	1	
R381		ERJ6GEYJ473	M.RESISTOR CH 1/10W 47K	1	
R382		ERJ6GEYJ683	M.RESISTOR CH 1/10W 68K	1	
R383		ERJ6GEYJ152	M.RESISTOR CH 1/10W 1.5K	1	
R386		ERJ6GEYJ182	M.RESISTOR CH 1/10W 1.8K	1	
R388		ERJ6GEYJ273	M.RESISTOR CH 1/10W 27K	1	
R389		ERJ6GEYJ153	M.RESISTOR CH 1/10W 15K	1	
R390		ERJ6GEYJ273	M.RESISTOR CH 1/10W 27K	1	
R391		ERJ6GEYJ153	M.RESISTOR CH 1/10W 15K	1	
R392,93		ERJ6GEYJ103	M.RESISTOR CH 1/10W 10K	2	
R394,95		VRE0034E102	M.RESISTOR CH 1/10W 1K	2	
R396,97		VRE0034E472	M.RESISTOR CH 1/10W 4.7K	2	
R398		ERJ6GEYJ183	M.RESISTOR CH 1/10W 18K	1	
R424		ERJ6GEYJ222	M.RESISTOR CH 1/10W 2.2K	1	
R427		ERJ6GEYJ333	M.RESISTOR CH 1/10W 33K	1	
R428		ERJ6GEYJ223	M.RESISTOR CH 1/10W 22K	1	
R432,33		ERJ6GEYJ393	M.RESISTOR CH 1/10W 39K	2	
R434		ERJ6GEYJ331	M.RESISTOR CH 1/10W 330	1	
R435		ERJ6GEYJ103	M.RESISTOR CH 1/10W 10K	1	
R437		ERJ6GEYJ684	M.RESISTOR CH 1/10W 680K	1	
R440		ERJ6GEYJ562	M.RESISTOR CH 1/10W 5.6K	1	
R441,42		ERJ6GEYJ105	M.RESISTOR CH 1/10W 1M	2	
R443		ERJ6GEYJ223	M.RESISTOR CH 1/10W 22K	1	
R445		ERJ6GEY0R00	M.RESISTOR CH 1/10W 0	1	
R446,47		ERJ6GEYJ562	M.RESISTOR CH 1/10W 5.6K	2	
R448,49		ERJ6GEYJ105	M.RESISTOR CH 1/10W 1M	2	
R460		ERJ6GEYJ103	M.RESISTOR CH 1/10W 10K	1	
R461		ERJ6GEY0R00	M.RESISTOR CH 1/10W 0	1	
R462		ERJ6GEYJ223	M.RESISTOR CH 1/10W 22K	1	
R463		ERJ6GEYJ331	M.RESISTOR CH 1/10W 330	1	
R464		ERJ6GEY0R00	M.RESISTOR CH 1/10W 0	1	
R465		ERJ6GEYJ223	M.RESISTOR CH 1/10W 22K	1	
R466		ERJ6GEYJ103	M.RESISTOR CH 1/10W 10K	1	
R467		ERJ6GEYJ473	M.RESISTOR CH 1/10W 47K	1	
R470		ERJ6GEYJ394	M.RESISTOR CH 1/10W 390K	1	
R496		ERJ6GEYJ564	M.RESISTOR CH 1/10W 560K	1	
R501		ERJ6GEYJ102	M.RESISTOR CH 1/10W 1K	1	
R502		ERJ6GEYJ103	M.RESISTOR CH 1/10W 10K	1	
R503		ERJ6GEYJ102	M.RESISTOR CH 1/10W 1K	1	
R504-07		ERJ6GEYJ821	M.RESISTOR CH 1/10W 820	4	
R508		ERJ6GEYJ473	M.RESISTOR CH 1/10W 47K	1	
R509-12		ERJ6GEYJ391	M.RESISTOR CH 1/10W 390	4	
R513		ERJ6GEYJ103	M.RESISTOR CH 1/10W 10K	1	
R514		ERJ6GEYJ224	M.RESISTOR CH 1/10W 220K	1	
R515		ERJ6GEYJ273	M.RESISTOR CH 1/10W 27K	1	
R516		ERJ6GEYJ103	M.RESISTOR CH 1/10W 10K	1	
R517		ERJ6GEYJ272	M.RESISTOR CH 1/10W 2.7K	1	
R518		ERJ6GEYJ104	M.RESISTOR CH 1/10W 100K	1	
R519		ERJ6GEYJ392	M.RESISTOR CH 1/10W 3.9K	1	
R520		ERJ6GEYJ333	M.RESISTOR CH 1/10W 33K	1	
R521,22		ERJ6GEYJ224	M.RESISTOR CH 1/10W 220K	2	
R523		ERX12SJR47	M.RESISTOR 1/2W 0.47	1	
R524		ERJ6GEYJ273	M.RESISTOR CH 1/10W 27K	1	
R525		ERJ6GEYJ272	M.RESISTOR CH 1/10W 2.7K	1	
R526		ERJ6GEYJ103	M.RESISTOR CH 1/10W 10K	1	
R527		ERJ6GEYJ104	M.RESISTOR CH 1/10W 100K	1	
R528		ERJ6GEYJ224	M.RESISTOR CH 1/10W 220K	1	
R529		ERJ6GEYJ392	M.RESISTOR CH 1/10W 3.9K	1	
R530		ERJ6GEYJ223	M.RESISTOR CH 1/10W 22K	1	
R531		ERJ6GEYJ224	M.RESISTOR CH 1/10W 220K	1	
R532		ERX12SJR68	M.RESISTOR 1/2W 0.68	1	
R533		ERJ6GEYJ224	M.RESISTOR CH 1/10W 220K	1	
R534		ERJ6GEYJ273	M.RESISTOR CH 1/10W 27K	1	
R535		ERJ6GEYJ103	M.RESISTOR CH 1/10W 10K	1	
R536		ERJ6GEYJ104	M.RESISTOR CH 1/10W 100K	1	

Ref.No.		Part No.	Part Name & Description	Pcs	Remarks
R537		ERX12SJR47	M.RESISTOR 1/2W 0.47	1	
R538-40		ERJ6GEYJ224	M.RESISTOR CH 1/10W 220K	3	
R541		ERJ6GEYJ272	M.RESISTOR CH 1/10W 2.7K	1	
R542		ERJ6GEYJ223	M.RESISTOR CH 1/10W 22K	1	
R543		ERJ6GEYJ273	M.RESISTOR CH 1/10W 27K	1	
R544		ERJ6GEYJ104	M.RESISTOR CH 1/10W 100K	1	
R545		ERJ6GEYJ103	M.RESISTOR CH 1/10W 10K	1	
R546		ERX12SJR47	M.RESISTOR 1/2W 0.47	1	
R547-49		ERJ6GEYJ224	M.RESISTOR CH 1/10W 220K	3	
R550		ERJ6GEYJ272	M.RESISTOR CH 1/10W 2.7K	1	
R551		ERJ6GEYJ223	M.RESISTOR CH 1/10W 22K	1	
R553		ERJ6GEY0R00	M.RESISTOR CH 1/10W 0	1	
R554		ERJ6GEYJ272	M.RESISTOR CH 1/10W 2.7K	1	
R555-57		ERJ6GEY0R00	M.RESISTOR CH 1/10W 0	3	
R600		ERJ6GEYJ271	M.RESISTOR CH 1/10W 270	1	
R601		ERJ6GEYJ105	M.RESISTOR CH 1/10W 1M	1	
R603		ERJ6GEYJ271	M.RESISTOR CH 1/10W 270	1	
R604		ERJ6GEYJ105	M.RESISTOR CH 1/10W 1M	1	
SW1,W2		VSR0032	VOLTAGE SELECT SWITCH	2	
SW3		VSS0126	SWITCH	1	
TP3-P7		VJR0646	TEST POINT	5	
TP13		VJR0646	TEST POINT	1	
TP15-17		VJR0646	TEST POINT	3	
TP19,20		VJR0646	TEST POINT	2	
TP102-05		VJR0646	TEST POINT	4	
TP108-18		VJR0646	TEST POINT	11	
TP201,02		VJR0646	TEST POINT	2	
TP302-04		VJR0646	TEST POINT	3	
TP306		VJR0646	TEST POINT	1	
TP309-12		VJR0646	TEST POINT	4	
TPG1-G3		VJR0646	TEST POINT	3	
VC101		ECV1ZW30X53	V.CAPACITOR 30P	1	
VR1		VRV0109B503	V.RESISTOR 50K	1	
VR3		VRV0109B203	V.RESISTOR 20K	1	
VR101		VRV0109B203	V.RESISTOR 20K	1	
VR102		VRV0109B103	V.RESISTOR 10K	1	
VR103		VRV0109B203	V.RESISTOR 20K	1	
VR104		VRV0109B502	V.RESISTOR 5K	1	
VR105		VRV0109B104	V.RESISTOR 100K	1	
VR301		VRV0109B502	V.RESISTOR 5K	1	
VR302,03		VRV0109B202	V.RESISTOR 2K	2	
VR304-07		VRV0109B503	V.RESISTOR 50K	4	
VR308		VRV0109B202	V.RESISTOR 2K	1	
VR309		VRV0109B503	V.RESISTOR 50K	1	
X101		VSX0217	CRYSTAL OSCILLATOR	1	
X501		VSX0136	CRYSTAL OSCILLATOR	1	
X600		VSX0126	CRYSTAL OSCILLATOR	1	
X601		VSX0086	CRYSTAL OSCILLATOR	1	
			MISCELLANEOUS		
		VML2143	CARD PULLER	1	
		VML2144	CARD PULLER	1	
		VMS4174	PIN	6	
		VMZ1091	BARRIER	1	
		VMZ1547	BARRIER	1	
		VSC2286	SHIELD CASE	1	
		VSC3056	SHIELD CASE	1	
		VXA3966	P.C.B. SHIELD PLATE	1	

Refer to the P.C.BOARDS LIST, page 6-1-1, before using this page.

Ref.No.		Part No.	Part Name & Description	Pcs	Remarks
		XNG26E	NUT	4	
		XYNV3+K6FR	SCREW	6	
		XYN26+C12	SCREW	4	

Refer to the P.C.BOARDS LIST, page 6-1-1, before using this page.

Ref.No.		Part No.	Part Name & Description	Pcs	Remarks
	■	VEP82061F	P.C.BOARD W/COMPONENT		FOR AU-63-E,B
			W5 SERVO		
			CAPACITORS		
C1		ECQM1H273JF	P.CAPACITOR 50V 0.027U	1	
C2		ECUM1H152JN	C.CAPACITOR CH 50V 1500P	1	
C3,C4		ECUM1H101JCN	C.CAPACITOR CH 50V 100P	2	
C5		ECEA1CU100	E.CAPACITOR 16V 10U	1	
C6		ECEA0JU101	E.CAPACITOR 6.3V 100U	1	
C7		ECEA1AU470	E.CAPACITOR 10V 47U	1	
C8		ECUM1H103ZFN	C.CAPACITOR CH 50V 0.01U	1	
C9		ECQM1H154JF	P.CAPACITOR 50V 0.15U	1	
C10		ECEA1HN2R2S	E.CAPACITOR 50V 2.2U	1	
C11		ECQM1H223JF	P.CAPACITOR 50V 0.022U	1	
C13		ECQP1H822JZ	P.CAPACITOR 50V 8200P	1	
C14		ECQM1H682JV	P.CAPACITOR 50V 6800P	1	
C15,16		ECUM1H103ZFN	C.CAPACITOR CH 50V 0.01U	2	
C17		ECQM1H394JV	P.CAPACITOR 50V 0.39U	1	
C18		ECEA1HU4R7	E.CAPACITOR 50V 4.7U	1	
C19		ECEA1AU470	E.CAPACITOR 10V 47U	1	
C20,21		ECUM1H103ZFN	C.CAPACITOR CH 50V 0.01U	2	
C22		ECEA1HU2R2	E.CAPACITOR 50V 2.2U	1	
C23,24		ECUM1E104ZFN	C.CAPACITOR CH 25V 0.1U	2	
C25		ECUM1H103ZFN	C.CAPACITOR CH 50V 0.01U	1	
C26		ECEA1AU470	E.CAPACITOR 10V 47U	1	
C27		ECUM1H103ZFN	C.CAPACITOR CH 50V 0.01U	1	
C28		ECEA1AU470	E.CAPACITOR 10V 47U	1	
C29		ECEA1AU330	E.CAPACITOR 10V 33U	1	
C30		ECUM1H103ZFN	C.CAPACITOR CH 50V 0.01U	1	
C31		ECEA1AU330	E.CAPACITOR 10V 33U	1	
C32		ECEA1AU470	E.CAPACITOR 10V 47U	1	
C33		ECUM1H103ZFN	C.CAPACITOR CH 50V 0.01U	1	
C34		ECEA1AU470	E.CAPACITOR 10V 47U	1	
C39		ECUM1H331JCN	C.CAPACITOR CH 50V 330P	1	
C40-42		ECUM1H103ZFN	C.CAPACITOR CH 50V 0.01U	3	
C43		ECUM1H101JCN	C.CAPACITOR CH 50V 100P	1	
C46		ECEA1CU470	E.CAPACITOR 16V 47U	1	
C47,48		ECUM1E104ZFN	C.CAPACITOR CH 25V 0.1U	2	
C101		ECQM1H104JF	P.CAPACITOR 50V 0.1U	1	
C102		ECUM1H151JCN	C.CAPACITOR CH 50V 150P	1	
C103		ECEA1CU470	E.CAPACITOR 16V 47U	1	
C104		ECEA1HU2R2	E.CAPACITOR 50V 2.2U	1	
C105		ECEA1CU101	E.CAPACITOR 16V 100U	1	
C106		ECQM1H104JF	P.CAPACITOR 50V 0.1U	1	
C107		ECUM1H151JCN	C.CAPACITOR CH 50V 150P	1	
C108		ECUM1H102JCN	C.CAPACITOR CH 50V 1000P	1	
C109		ECUM1H221JCN	C.CAPACITOR CH 50V 220P	1	
C110		ECQM1H103JF	P.CAPACITOR 50V 0.01U	1	
C111		ECEA1HU010	E.CAPACITOR 50V 1U	1	
C112		ECQM1H154JF	P.CAPACITOR 50V 0.15U	1	
C113		ECEA1HU010	E.CAPACITOR 50V 1U	1	
C114		ECEA1CU470	E.CAPACITOR 16V 47U	1	
C115		ECUM1H103ZFN	C.CAPACITOR CH 50V 0.01U	1	
C116		ECEA1CU470	E.CAPACITOR 16V 47U	1	
C117		ECUM1H103ZFN	C.CAPACITOR CH 50V 0.01U	1	
C118		ECEA1CU470	E.CAPACITOR 16V 47U	1	
C119		ECUM1H103ZFN	C.CAPACITOR CH 50V 0.01U	1	
C120		ECEA1CU470	E.CAPACITOR 16V 47U	1	
C121		ECUM1H103ZFN	C.CAPACITOR CH 50V 0.01U	1	
C122		ECEA1CU470	E.CAPACITOR 16V 47U	1	
C123		ECUM1H330JCN	C.CAPACITOR CH 50V 33P	1	
C124		ECUM1H103ZFN	C.CAPACITOR CH 50V 0.01U	1	
C125		ECEA1CU470	E.CAPACITOR 16V 47U	1	
C126		ECQM1H562JF	P.CAPACITOR 50V 5600P	1	
C127		ECQM1H393JF	P.CAPACITOR 50V 0.039U	1	
C128		ECQM1H104JF	P.CAPACITOR 50V 0.1U	1	
C129		ECEA1CM22	E.CAPACITOR 10V 22U	1	
C130		ECEA1HU010	E.CAPACITOR 50V 1U	1	
C131		ECEA1EN220S	E.CAPACITOR 25V 22U	1	
C132		ECQM1H103JF	P.CAPACITOR 50V 0.01U	1	
C133-36		ECUM1H103ZFN	C.CAPACITOR CH 50V 0.01U	4	
C137		ECEA1CU101	E.CAPACITOR 16V 100U	1	
C139		ECQM1H822JF	P.CAPACITOR 50V 8200P	1	
C140		ECUM1H102JCN	C.CAPACITOR CH 50V 1000P	1	
C141		ECEA1HN010S	E.CAPACITOR 50V 1U	1	
C143		ECEA1CU470	E.CAPACITOR 16V 47U	1	
C145		ECEA1AU470	E.CAPACITOR 10V 47U	1	
C146		ECUM1H103ZFN	C.CAPACITOR CH 50V 0.01U	1	
C147		ECEA1HUR47	E.CAPACITOR 50V 0.47U	1	
C148		ECEA1CU470	E.CAPACITOR 16V 47U	1	
C149,50		ECUM1H103ZFN	C.CAPACITOR CH 50V 0.01U	2	
C151		ECEA1HN010S	E.CAPACITOR 50V 1U	1	
C152,53		ECUM1H103ZFN	C.CAPACITOR CH 50V 0.01U	2	
C154		ECUM1H152KBN	C.CAPACITOR CH 50V 1500P	1	
C155		ECEA1HN100S	E.CAPACITOR 50V 10U	1	
C156		ECEA1HUR47	E.CAPACITOR 50V 0.47U	1	
C157,58		ECUM1H103ZFN	C.CAPACITOR CH 50V 0.01U	2	
C159		ECQM1H104JF	P.CAPACITOR 50V 0.1U	1	
C160		ECUM1H103ZFN	C.CAPACITOR CH 50V 0.01U	1	
C161		ECQM1H104JF	P.CAPACITOR 50V 0.1U	1	
C162,63		ECQM1H103JF	P.CAPACITOR 50V 0.01U	2	
C164		ECEA1HU4R7	E.CAPACITOR 50V 4.7U	1	
C165-67		ECUM1H103ZFN	C.CAPACITOR CH 50V 0.01U	3	
C168		ECEA1EU100	E.CAPACITOR 25V 10U	1	
C169		ECQM1H103JF	P.CAPACITOR 50V 0.01U	1	
C170		ECUM1H471JCN	C.CAPACITOR CH 50V 470P	1	
C171,72		ECUM1H103ZFN	C.CAPACITOR CH 50V 0.01U	2	
C173		ECUM1H101JCN	C.CAPACITOR CH 50V 100P	1	
C174		ECUM1H103ZFN	C.CAPACITOR CH 50V 0.01U	1	
C175		ECEA1HU2R2	E.CAPACITOR 50V 2.2U	1	
C176		ECEA1CU470	E.CAPACITOR 16V 47U	1	
C177		ECQM1H222JF	P.CAPACITOR 50V 2200P	1	
C179		ECUM1H221JCN	C.CAPACITOR CH 50V 220P	1	
C301		ECEA1AU330	E.CAPACITOR 10V 33U	1	
C302		ECUM1H103ZFN	C.CAPACITOR CH 50V 0.01U	1	
C303		ECQM1H562JF	P.CAPACITOR 50V 5600P	1	
C304		ECQM1H392JF	P.CAPACITOR 50V 3900P	1	
C305		ECUM1H103ZFN	C.CAPACITOR CH 50V 0.01U	1	
C306		ECQM1H123JF	P.CAPACITOR 50V 0.012U	1	
C307		ECEA1CN470S	E.CAPACITOR 16V 47U	1	
C308		ECEA0JU221	E.CAPACITOR 6.3V 220U	1	
C309		ECEA1HU2R2	E.CAPACITOR 50V 2.2U	1	
C310		ECQM1H104JF	P.CAPACITOR 50V 0.1U	1	
C311		ECUM1H153KBN	C.CAPACITOR CH 50V 0.015U	1	
C312		ECEA1HN010S	E.CAPACITOR 50V 1U	1	
C313,14		ECUM1H103ZFN	C.CAPACITOR CH 50V 0.01U	2	
C315		ECQM1H104JF	P.CAPACITOR 50V 0.1U	1	
C316		ECUM1E273KBN	C.CAPACITOR CH 25V 0.027U	1	
C317		ECEA1HN2R2S	E.CAPACITOR 50V 2.2U	1	
C318-20		ECUM1H103ZFN	C.CAPACITOR CH 50V 0.01U	3	
C321		ECEA1CU100	E.CAPACITOR 16V 10U	1	
C322		ECEA0JU470	E.CAPACITOR 6.3V 47U	1	
C323		ECUM1H103ZFN	C.CAPACITOR CH 50V 0.01U	1	
C324		ECEA0JU102	E.CAPACITOR 6.3V 1000U	1	
C327		ECEA1HU2R2	E.CAPACITOR 50V 2.2U	1	
C330-36		ECUM1H103ZFN	C.CAPACITOR CH 50V 0.01U	7	
C338,39		ECEA1CU100	E.CAPACITOR 16V 10U	2	
C342		ECQM1H104JF	P.CAPACITOR 50V 0.1U	1	
C401-03		ECUM1H103ZFN	C.CAPACITOR CH 50V 0.01U	3	
C406-10		ECUM1H103ZFN	C.CAPACITOR CH 50V 0.01U	5	
C454		ECUM1H103ZFN	C.CAPACITOR CH 50V 0.01U	1	
C492		ECUM1H103ZFN	C.CAPACITOR CH 50V 0.01U	1	
C495,96		ECUM1H103ZFN	C.CAPACITOR CH 50V 0.01U	2	
C501		ECUM1H103ZFN	C.CAPACITOR CH 50V 0.01U	1	
C502		ECEA1CU470	E.CAPACITOR 16V 47U	1	
C503		ECEA1ESS471	E.CAPACITOR 25V 470U	1	
C504		ECUM1E473KBN	C.CAPACITOR CH 25V 0.047U	1	
C505		ECUM1H561JCN	C.CAPACITOR CH 50V 560P	1	
C506		ECUM1H820JCN	C.CAPACITOR CH 50V 82P	1	
C507		ECUM1H561JCN	C.CAPACITOR CH 50V 560P	1	
C508		ECEA1HU010	E.CAPACITOR 50V 1U	1	
C509-13		ECEA1ESS101	E.CAPACITOR 25V 100U	5	
C514		ECQM1H104JF	P.CAPACITOR 50V 0.1U	1	

Refer to the P.C.BOARDS LIST, page 6-1-1, before using this page.

Ref.No.		Part No.	Part Name & Description	Pcs	Remarks
C515		ECEA1EU4R7	E.CAPACITOR 25V 4.7U	1	
C516-18		ECEA1HN4R7S	E.CAPACITOR 50V 4.7U	3	
C519		ECEA1HU010	E.CAPACITOR 50V 1U	1	
C520-22		ECUM1H103KBN	C.CAPACITOR CH 50V 0.01U	3	
C523		ECQM1H104JF	P.CAPACITOR 50V 0.1U	1	
C524		ECEA1EU4R7	E.CAPACITOR 25V 4.7U	1	
C525,26		ECEA1HN4R7S	E.CAPACITOR 50V 4.7U	2	
C527		ECQM1H104JF	P.CAPACITOR 50V 0.1U	1	
C528		ECEA1HU010	E.CAPACITOR 50V 1U	1	
C529-31		ECUM1H103KBN	C.CAPACITOR CH 50V 0.01U	3	
C532		ECEA1EU4R7	E.CAPACITOR 25V 4.7U	1	
C533,34		ECEA1HN4R7S	E.CAPACITOR 50V 4.7U	2	
C535		ECQM1H104JF	P.CAPACITOR 50V 0.1U	1	
C536		ECEA1HU010	E.CAPACITOR 50V 1U	1	
C537-39		ECUM1H103KBN	C.CAPACITOR CH 50V 0.01U	3	
C540		ECEA1EU4R7	E.CAPACITOR 25V 4.7U	1	
C541-43		ECEA1HN4R7S	E.CAPACITOR 50V 4.7U	3	
C544		ECQM1H104JF	P.CAPACITOR 50V 0.1U	1	
C545		ECEA1HU010	E.CAPACITOR 50V 1U	1	
C546-48		ECUM1H103KBN	C.CAPACITOR CH 50V 0.01U	3	
C549		ECEA1AU470	E.CAPACITOR 10V 47U	1	
C550		ECUM1E473KBN	C.CAPACITOR CH 25V 0.047U	1	
C551		ECEA1HN4R7S	E.CAPACITOR 50V 4.7U	1	
C552		ECQM1H104JF	P.CAPACITOR 50V 0.1U	1	
C553		ECEA1HN4R7S	E.CAPACITOR 50V 4.7U	1	
C558-63		ECQM1H104JF	P.CAPACITOR 50V 0.1U	6	
C600		ECUM1H680JCN	C.CAPACITOR CH 50V 68P	1	
C601		ECUM1H050DCN	C.CAPACITOR CH 50V 50P	1	
C602		ECUM1H680JCN	C.CAPACITOR CH 50V 68P	1	
C603		ECUM1H050DCN	C.CAPACITOR CH 50V 50P	1	
C700		ECUM1H101JCN	C.CAPACITOR CH 50V 100P	1	
C701		ECQM1H104JF	P.CAPACITOR 50V 0.1U	1	
C702		ECUM1H103ZFN	C.CAPACITOR CH 50V 0.01U	1	
C703		ECEA1HN4R7S	E.CAPACITOR 50V 4.7U	1	
C704		ECUM1H103ZFN	C.CAPACITOR CH 50V 0.01U	1	
C705		ECQM1H682JF	P.CAPACITOR 50V 6800P	1	
C706-08		ECUM1H103ZFN	C.CAPACITOR CH 50V 0.01U	3	
C709		ECQP1H151JZ	P.CAPACITOR 50V 150U	1	
C710,11		ECUM1H103ZFN	C.CAPACITOR CH 50V 0.01U	2	
C712,13		ECQP1H151JZ	P.CAPACITOR 50V 150U	2	
C714-19		ECUM1H103ZFN	C.CAPACITOR CH 50V 0.01U	6	
C720		ECEA1CU220	E.CAPACITOR 16V 22U	1	
C721		ECQM1H122JF	P.CAPACITOR 50V 1200P	1	
C722		ECUM1H103ZFN	C.CAPACITOR CH 50V 0.01U	1	
C723		ECUM1H470JCN	C.CAPACITOR CH 50V 47P	1	
C724		ECUM1H180JCN	C.CAPACITOR CH 50V 18P	1	
C725		ECUM1H103ZFN	C.CAPACITOR CH 50V 0.01U	1	
C726		ECEA1CU330	E.CAPACITOR 16V 33U	1	
C727		ECQM1H124JF	P.CAPACITOR 50V 0.12U	1	
C728,29		ECUM1H103ZFN	C.CAPACITOR CH 50V 0.01U	2	
C730-32		ECUM1H472KBN	C.CAPACITOR CH 50V 4700P	3	
C733		ECQM1H124JF	P.CAPACITOR 50V 0.12U	1	
C734,35		ECUM1H103ZFN	C.CAPACITOR CH 50V 0.01U	2	
C736		ECQM1H182JF	P.CAPACITOR 50V 1800P	1	
C737		ECEA1HUR33	E.CAPACITOR 50V 0.33U	1	
C738		ECUM1H103ZFN	C.CAPACITOR CH 50V 0.01U	1	
C739		ECEA1CU100	E.CAPACITOR 16V 10U	1	
C740		ECEA1HUR33	E.CAPACITOR 50V 0.33U	1	
C741		ECUM1H103ZFN	C.CAPACITOR CH 50V 0.01U	1	
C742		ECEA1CU100	E.CAPACITOR 16V 10U	1	
C743		ECEA1HUR33	E.CAPACITOR 50V 0.33U	1	
C744		ECUM1H103ZFN	C.CAPACITOR CH 50V 0.01U	1	
C745		ECEA1CU100	E.CAPACITOR 16V 10U	1	
C746,47		ECEA1AU330	E.CAPACITOR 10V 33U	2	
C748		ECEA1HUR33	E.CAPACITOR 50V 0.33U	1	
C749		ECUM1H103ZFN	C.CAPACITOR CH 50V 0.01U	1	
C750		ECEA1CU100	E.CAPACITOR 16V 10U	1	
C751		ECUM1H103KBN	C.CAPACITOR CH 50V 0.01U	1	
C752		ECUM1H330JCN	C.CAPACITOR CH 50V 33P	1	
C753,54		ECEA1AU330	E.CAPACITOR 10V 33U	2	
C755		ECUM1H103KBN	C.CAPACITOR CH 50V 0.01U	1	
C756		ECUM1H103ZFN	C.CAPACITOR CH 50V 0.01U	1	
C757		ECUM1H271JCN	C.CAPACITOR CH 50V 270P	1	
C758		ECUM1H103ZFN	C.CAPACITOR CH 50V 0.01U	1	
C759		ECUM1H103KBN	C.CAPACITOR CH 50V 0.01U	1	

Ref.No.		Part No.	Part Name & Description	Pcs	Remarks
C760		ECUM1H103ZFN	C.CAPACITOR CH 50V 0.01U	1	
C761		ECUM1H330JCN	C.CAPACITOR CH 50V 33P	1	
C762		ECUM1H271JCN	C.CAPACITOR CH 50V 270P	1	
C763,64		ECEA1AU330	E.CAPACITOR 10V 33U	2	
C765		ECUM1H103KBN	C.CAPACITOR CH 50V 0.01U	1	
C900-11		ECUM1H103ZFN	C.CAPACITOR CH 50V 0.01U	12	
D1		MA151K	DIODE	1	
D4		MA151K	DIODE	1	
D101		MA151K	DIODE	1	
D102		MA153	DIODE	1	
D103		MA151WK	DIODE	1	
D104		MA151K	DIODE	1	
D105		MA151WK	DIODE	1	
D106,07		MA151WA	DIODE	2	
D108		MA151K	DIODE	1	
D109		MA151WK	DIODE	1	
D112		MA151WK	DIODE	1	
D113,14		MA151K	DIODE	2	
D115		MA153	DIODE	1	
D116		MA151K	DIODE	1	
D119		MA151WK	DIODE	1	
D120-22		MA151WA	DIODE	3	
D123		MA151K	DIODE	1	
D125		MA151K	DIODE	1	
D126,27		MA153	DIODE	2	
D128		MA151WA	DIODE	1	
D129		MA151K	DIODE	1	
D301,02		MA151K	DIODE	2	
D303		MA151WK	DIODE	1	
D304		MA151WA	DIODE	1	
D305		MA151K	DIODE	1	
D307		MA151WA	DIODE	1	
D309		MA151WK	DIODE	1	
D310		MA151K	DIODE	1	
D313		MA151WA	DIODE	1	
D314-17		MA151WK	DIODE	4	
D318		MA151K	DIODE	1	
D319,20		MA151WK	DIODE	2	
D321,22		MA151K	DIODE	2	
D323,24		MA151WK	DIODE	2	
D325		MA151K	DIODE	1	
D330		MA151K	DIODE	1	
D333		MA151WK	DIODE	1	
D334-38		MA151K	DIODE	5	
D340		MA151WA	DIODE	1	
D341		MA151K	DIODE	1	
D345,46		MA151WA	DIODE	2	
D349		MA151WK	DIODE	1	
D351		MA151K	DIODE	1	
D501		MA151K	DIODE	1	
D502		MA151WK	DIODE	1	
D503		MA153	DIODE	1	
D504		MA151WK	DIODE	1	
D505,06		MA151K	DIODE	2	
D507		MA151WK	DIODE	1	
D508,09		MA151K	DIODE	2	
D510		MA151WK	DIODE	1	
D511		MA151K	DIODE	1	
D514-17		MA701A	DIODE	4	
D572		MA151K	DIODE	1	
D700		MA151WA	DIODE	1	
D701,02		1SS101	DIODE	2	
D703		MA151K	DIODE	1	
D704-06		MA153	DIODE	3	
D707-09		LN25RP	LED	3	
D710		MA153	DIODE	1	
D711,12		MA1039	DIODE	2	
D713		MA153	DIODE	1	
D714,15		MA1039	DIODE	2	
D716-21		MA153	DIODE	6	

Refer to the P.C.BOARDS LIST, page 6-1-1, before using this page.

Ref.No.		Part No.	Part Name & Description	Pcs	Remarks
IC1		LM2904M	IC	1	
IC2		LM2903M	IC	1	
IC3		LM2904M	IC	1	
IC4		NJM4558M	IC	1	
IC5		MC14538BF	IC	1	
IC6		UPD65031F405	IC	1	
IC7		MN53015VZW	IC	1	
IC8		MC14049UBF	IC	1	
IC9		MC14013BF	IC	1	
IC10		MM74HC221AM	IC	1	
IC11		AN78L05	IC	1	
IC12		MC14021BF	IC	1	
IC13		MC14094BF	IC	1	
IC14		MC14053BF	IC	1	(R)
IC15		MC14049UBF	IC	1	
IC16		MC14050BF	IC	1	
IC18		MN51020VZZ	IC	1	
IC101		LM2904M	IC	1	
IC102		LM2903M	IC	1	
IC103		LM2904M	IC	1	
IC104		MC14538BF	IC	1	
IC105		AN79L09	IC	1	
IC106		AN78N09	IC	1	
IC107		DN74LS293S	IC	1	
IC108		MC74HC00AF	IC	1	
IC109		MN6064R	IC	1	
IC110		MN6168VIA	IC	1	
IC111		MC74HCU04F	IC	1	
IC112		MC14049UBF	IC	1	
IC113,14		LM2904M	IC	2	
IC115		LM2903M	IC	1	
IC116,17		LM2904M	IC	2	
IC118-20		MC14066BF	IC	3	
IC121		MC14052BF	IC	1	
IC123		MC14053BF	IC	1	(R)
IC124		MN53030VYA	IC	1	
IC125		MN53007VYC	IC	1	
IC126		UPC4558G	IC	1	
IC128		NJM4558M	IC	1	
IC129		MC14538BF	IC	1	
IC130		MC14013BF	IC	1	
IC131		LM2904M	IC	1	
IC132		UPC4558G	IC	1	
IC133		MN4030BS	IC	1	
IC134		MC14538BF	IC	1	
IC135		MC14053BF	IC	1	(R)
IC136		MC74HC02AF	IC	1	
IC137		MC14538BF	IC	1	
IC301		AN78L05	IC	1	
IC302		LM2904M	IC	1	
IC303		LM2902M	IC	1	
IC304		MC14053BF	IC	1	(R)
IC305		MC14066BF	IC	1	
IC306		LM2904M	IC	1	
IC307		LM2902M	IC	1	
IC308,09		LM2904M	IC	2	
IC310-13		MC14066BF	IC	4	
IC314		MC14028BF	IC	1	
IC315		MC14081BF	IC	1	
IC316		NJM2901M	IC	1	
IC318		MC14538BF	IC	1	
IC319		MC14049UBF	IC	1	
IC501		BA6149LS	IC	1	
IC502		PU4213	IC	1	
IC503-06		AN3821K	IC	4	
IC600,01		MC74HCU04F	IC	2	
IC700		AN608P	IC	1	
IC701		UPC4741G	IC	1	
IC702		TL431CLP	IC	1	
IC703		MC14053BF	IC	1	(R)
IC704		UPC4558G	IC	1	
IC705		UPC4082G	IC	1	
IC706		MC74HC157AF	IC	1	
IC707		MN18882	IC	1	

Ref.No.		Part No.	Part Name & Description	Pcs	Remarks
IC708		VSI0623	IC	1	
IC709		M51951BML	IC	1	
IC710		MC14538BF	IC	1	
IC711		MSM5210RS	IC	1	
IC712		UPD65024F137	IC	1	
IC713		UPC4082G	IC	1	
IC714		UPC4558G	IC	1	
IC715		MC14051BF	IC	1	
IC716		UPC4082G	IC	1	
IC717		UPC4741G	IC	1	
IC718		UPC4558G	IC	1	
IC719		MC14051BF	IC	1	
IC720		MC14053BF	IC	1	(R)
IC721		AN79L05	IC	1	
IC722		AN78L05	IC	1	
IC723		AN78L09	IC	1	
IC724		AN79L09	IC	1	
IC725,26		LM2902M	IC	2	
IC727		LM2903M	IC	1	
IC800		LM2904M	IC	1	
ICS708		VJS2336A028	CONNECTOR (FEMALE)	1	
L1		VLP0017	COIL	1	
L2-L4		VLQEL05S221J	COIL 220UH	3	
L101,02		VLQEL05S221J	COIL 220UH	2	
L501		VLQ0214	COIL 50UH	1	
L504-07		VLQ0129	COIL 300UH	4	
L701		VLQEL05S101J	COIL 100UH	1	
L702		VLQ0128	COIL 47UH	1	
Q1,Q2		UN2213	TRANSISTOR-RESISTOR	2	
Q8,Q9		UN2213	TRANSISTOR-RESISTOR	2	
Q10,11		UN2213	TRANSISTOR-RESISTOR	2	
Q17		UN2213	TRANSISTOR-RESISTOR	1	
Q101		2SD601	TRANSISTOR CHIP	1	(Q,R)
Q102		UN2213	TRANSISTOR-RESISTOR	1	
Q103		2SJ43	TRANSISTOR	1	
Q104		UN2213	TRANSISTOR-RESISTOR	1	
Q105		2SD601	TRANSISTOR CHIP	1	(Q,R)
Q106-08		UN2213	TRANSISTOR-RESISTOR	3	
Q109		2SD601	TRANSISTOR CHIP	1	(Q,R)
Q110-19		UN2213	TRANSISTOR-RESISTOR	10	
Q120		2SD601	TRANSISTOR CHIP	1	(Q,R)
Q123,24		UN2213	TRANSISTOR-RESISTOR	2	
Q128		UN2213	TRANSISTOR-RESISTOR	1	
Q129		UN2214	TRANSISTOR-RESISTOR	1	
Q130		2SK374	TRANSISTOR	1	
Q131-33		UN2213	TRANSISTOR-RESISTOR	3	
Q134,35		2SB709	TRANSISTOR CHIP	2	(Q,R)
Q137-39		UN2213	TRANSISTOR-RESISTOR	3	
Q140		MA151A	DIODE	1	
Q301,02		UN2213	TRANSISTOR-RESISTOR	2	
Q303		UN2113	TRANSISTOR-RESISTOR	1	
Q304		UN2213	TRANSISTOR-RESISTOR	1	
Q305		UN2113	TRANSISTOR-RESISTOR	1	
Q306-09		UN2213	TRANSISTOR-RESISTOR	4	
Q312-14		UN2213	TRANSISTOR-RESISTOR	3	
Q316		2SD601	TRANSISTOR CHIP	1	(Q,R)
Q317		UN2213	TRANSISTOR-RESISTOR	1	
Q319		2SD601	TRANSISTOR CHIP	1	(Q,R)
Q320		UN2213	TRANSISTOR-RESISTOR	1	
Q336,37		UN2213	TRANSISTOR-RESISTOR	2	
Q340		UN2213	TRANSISTOR-RESISTOR	1	
Q343		UN2213	TRANSISTOR-RESISTOR	1	
Q346,47		UN2213	TRANSISTOR-RESISTOR	2	
Q501-04		2SB709	TRANSISTOR CHIP	4	(Q,R)
Q505		UN2113	TRANSISTOR-RESISTOR	1	
Q506		UN2213	TRANSISTOR-RESISTOR	1	
Q507		UN2113	TRANSISTOR-RESISTOR	1	
Q508,09		UN2213	TRANSISTOR-RESISTOR	2	
Q700		UN2113	TRANSISTOR-RESISTOR	1	

Refer to the P.C.BOARDS LIST, page 6-1-1, before using this page.

Ref.No.		Part No.	Part Name & Description	Pcs	Remarks
Q701-11		UN2213	TRANSISTOR-RESISTOR	11	
			RESISTORS		
R1		ERJ6GEYJ103	M.RESISTOR CH 1/10W 10K	1	
R2		ERJ6GEYJ683	M.RESISTOR CH 1/10W 68K	1	
R3		ERJ6GEYJ103	M.RESISTOR CH 1/10W 10K	1	
R4		ERJ6GEYJ105	M.RESISTOR CH 1/10W 1M	1	
R5,R6		ERJ6GEYJ103	M.RESISTOR CH 1/10W 10K	2	
R7		ERJ6GEYJ155	M.RESISTOR CH 1/10W 1.5M	1	
R8		ERJ6GEYJ103	M.RESISTOR CH 1/10W 10K	1	
R9		ERJ6GEYJ125	M.RESISTOR CH 1/10W 1.2M	1	
R10		ERJ6GEYJ563	M.RESISTOR CH 1/10W 56K	1	
R11,12		VRE0034E102	M.RESISTOR CH 1/10W 1K	2	
R13		ERJ6GEYJ123	M.RESISTOR CH 1/10W 12K	1	
R14		ERJ6GEYJ823	M.RESISTOR CH 1/10W 82K	1	
R15		ERJ6GEYJ393	M.RESISTOR CH 1/10W 39K	1	
R16		ERJ6GEYJ824	M.RESISTOR CH 1/10W 820K	1	
R17		ERJ6GEYJ822	M.RESISTOR CH 1/10W 8.2K	1	
R18		ERJ6GEYJ183	M.RESISTOR CH 1/10W 18K	1	
R19,20		ERJ6GEYJ822	M.RESISTOR CH 1/10W 8.2K	2	
R21		ERJ6GEYJ104	M.RESISTOR CH 1/10W 100K	1	
R22		ERJ6GEYJ472	M.RESISTOR CH 1/10W 4.7K	1	
R23		ERJ6GEYJ103	M.RESISTOR CH 1/10W 10K	1	
R24		ERJ6GEYJ563	M.RESISTOR CH 1/10W 56K	1	
R25		ERJ6GEYJ102	M.RESISTOR CH 1/10W 1K	1	
R27		ERJ6GEYJ123	M.RESISTOR CH 1/10W 12K	1	
R28-31		ERJ6GEYJ563	M.RESISTOR CH 1/10W 56K	4	
R34,35		ERJ6GEYJ103	M.RESISTOR CH 1/10W 10K	2	
R36		ERJ6GEYJ562	M.RESISTOR CH 1/10W 5.6K	1	
R37-44		ERJ6GEYJ563	M.RESISTOR CH 1/10W 56K	8	
R45		ERJ6GEYJ104	M.RESISTOR CH 1/10W 100K	1	
R50		ERJ6GEYJ563	M.RESISTOR CH 1/10W 56K	1	
R51		ERJ6GEYJ103	M.RESISTOR CH 1/10W 10K	1	
R52		ERJ6GEYJ474	M.RESISTOR CH 1/10W 470K	1	
R53		ERJ6GEYJ563	M.RESISTOR CH 1/10W 56K	1	
R54		ERJ6GEYJ103	M.RESISTOR CH 1/10W 10K	1	
R55		ERJ6GEYJ474	M.RESISTOR CH 1/10W 470K	1	
R56		ERJ6GEYJ563	M.RESISTOR CH 1/10W 56K	1	
R57		ERJ6GEYJ103	M.RESISTOR CH 1/10W 10K	1	
R58		ERJ6GEYJ474	M.RESISTOR CH 1/10W 470K	1	
R59		ERJ6GEYJ103	M.RESISTOR CH 1/10W 10K	1	
R60		ERJ6GEYJ102	M.RESISTOR CH 1/10W 1K	1	
R61		ERJ6GEYJ223	M.RESISTOR CH 1/10W 22K	1	
R62		ERJ6GEYJ103	M.RESISTOR CH 1/10W 10K	1	
R64		ERJ6GEYJ153	M.RESISTOR CH 1/10W 15K	1	
R65		ERJ6GEYJ683	M.RESISTOR CH 1/10W 68K	1	
R69,70		ERJ6GEYJ102	M.RESISTOR CH 1/10W 1K	2	
R101		ERJ6GEYJ103	M.RESISTOR CH 1/10W 10K	1	
R102		ERJ6GEYJ184	M.RESISTOR CH 1/10W 180K	1	
R103		ERJ6GEYJ102	M.RESISTOR CH 1/10W 1K	1	
R104		ERJ6GEYJ474	M.RESISTOR CH 1/10W 470K	1	
R105-07		ERJ6GEYJ103	M.RESISTOR CH 1/10W 10K	3	
R108		ERJ6GEYJ184	M.RESISTOR CH 1/10W 180K	1	
R109		ERJ6GEYJ102	M.RESISTOR CH 1/10W 1K	1	
R110		ERJ6GEYJ474	M.RESISTOR CH 1/10W 470K	1	
R111		ERJ6GEYJ103	M.RESISTOR CH 1/10W 10K	1	
R112		ERJ6GEYJ153	M.RESISTOR CH 1/10W 15K	1	
R113		ERJ6GEYJ562	M.RESISTOR CH 1/10W 5.6K	1	
R114		ERJ6GEYJ224	M.RESISTOR CH 1/10W 220K	1	
R115		ERJ6GEYJ682	M.RESISTOR CH 1/10W 6.8K	1	
R116		ERJ6GEYJ153	M.RESISTOR CH 1/10W 15K	1	
R117		ERJ6GEYJ104	M.RESISTOR CH 1/10W 100K	1	
R118		ERJ6GEYJ103	M.RESISTOR CH 1/10W 10K	1	
R119		ERJ6GEYJ153	M.RESISTOR CH 1/10W 15K	1	
R120-22		ERJ6GEYJ103	M.RESISTOR CH 1/10W 10K	3	
R123		ERJ6GEYJ105	M.RESISTOR CH 1/10W 1M	1	
R124		ERJ6GEYJ272	M.RESISTOR CH 1/10W 2.7K	1	
R125		ERJ6GEYJ103	M.RESISTOR CH 1/10W 10K	1	
R126-32		ERJ6GEYJ563	M.RESISTOR CH 1/10W 56K	7	
R133,34		ERJ6GEYJ103	M.RESISTOR CH 1/10W 10K	2	
R135,36		ERJ6GEYJ563	M.RESISTOR CH 1/10W 56K	2	
R137		ERJ6GEYJ103	M.RESISTOR CH 1/10W 10K	1	
R138		ERJ6GEYJ563	M.RESISTOR CH 1/10W 56K	1	

Ref.No.		Part No.	Part Name & Description	Pcs	Remarks
R139		ERJ6GEYJ224	M.RESISTOR CH 1/10W 220K	1	
R140		ERJ6GEYJ563	M.RESISTOR CH 1/10W 56K	1	
R141		ERJ6GEYJ224	M.RESISTOR CH 1/10W 220K	1	
R142		ERJ6GEYJ563	M.RESISTOR CH 1/10W 56K	1	
R143		ERJ6GEYJ223	M.RESISTOR CH 1/10W 22K	1	
R144		ERJ6GEYJ103	M.RESISTOR CH 1/10W 10K	1	
R145		ERJ6GEYJ563	M.RESISTOR CH 1/10W 56K	1	
R146		ERJ6GEYJ562	M.RESISTOR CH 1/10W 5.6K	1	
R147,48		ERJ6GEYJ273	M.RESISTOR CH 1/10W 27K	2	
R149		ERJ6GEYJ104	M.RESISTOR CH 1/10W 100K	1	
R150		ERJ6GEYJ183	M.RESISTOR CH 1/10W 18K	1	
R151		ERJ6GEYJ103	M.RESISTOR CH 1/10W 10K	1	
R152		ERJ6GEYJ824	M.RESISTOR CH 1/10W 820K	1	
R153		ERJ6GEYJ562	M.RESISTOR CH 1/10W 5.6K	1	
R154-56		ERJ6GEYJ393	M.RESISTOR CH 1/10W 39K	3	
R157,58		ERJ6GEYJ183	M.RESISTOR CH 1/10W 18K	2	
R159		ERJ6GEYJ682	M.RESISTOR CH 1/10W 6.8K	1	
R160		ERJ6GEYJ183	M.RESISTOR CH 1/10W 18K	1	
R161		ERJ6GEYJ103	M.RESISTOR CH 1/10W 10K	1	
R162		ERJ6GEYJ563	M.RESISTOR CH 1/10W 56K	1	
R163		ERJ6GEYJ103	M.RESISTOR CH 1/10W 10K	1	
R164		ERJ6GEYJ562	M.RESISTOR CH 1/10W 5.6K	1	
R165		ERJ6GEYJ563	M.RESISTOR CH 1/10W 56K	1	
R166		ERJ6GEYJ272	M.RESISTOR CH 1/10W 2.7K	1	
R167		ERJ6GEYJ333	M.RESISTOR CH 1/10W 33K	1	
R168		ERJ6GEYJ473	M.RESISTOR CH 1/10W 47K	1	
R169		ERJ6GEYJ183	M.RESISTOR CH 1/10W 18K	1	
R170,71		ERJ6GEYJ563	M.RESISTOR CH 1/10W 56K	2	
R172		ERJ6GEYJ102	M.RESISTOR CH 1/10W 1K	1	
R181,82		ERJ6GEYJ563	M.RESISTOR CH 1/10W 56K	2	
R183		ERJ6GEYJ102	M.RESISTOR CH 1/10W 1K	1	
R184		ERJ6GEYJ563	M.RESISTOR CH 1/10W 56K	1	
R185		ERJ6GEYJ104	M.RESISTOR CH 1/10W 100K	1	
R186		ERJ6GEYJ102	M.RESISTOR CH 1/10W 1K	1	
R187,88		ERJ6GEYJ822	M.RESISTOR CH 1/10W 8.2K	2	
R189		ERJ6GEYJ561	M.RESISTOR CH 1/10W 560	1	
R190		ERJ6GEYJ472	M.RESISTOR CH 1/10W 4.7K	1	
R191,92		ERJ6GEYJ563	M.RESISTOR CH 1/10W 56K	2	
R193,94		ERJ6GEYJ273	M.RESISTOR CH 1/10W 27K	2	
R195		ERJ6GEYJ562	M.RESISTOR CH 1/10W 5.6K	1	
R196		ERJ6GEYJ153	M.RESISTOR CH 1/10W 15K	1	
R197		ERJ6GEYJ332	M.RESISTOR CH 1/10W 3.3K	1	
R204		ERJ6GEYJ562	M.RESISTOR CH 1/10W 5.6K	1	
R205		ERJ6GEYJ101	M.RESISTOR CH 1/10W 100	1	
R206		ERJ6GEYJ104	M.RESISTOR CH 1/10W 100K	1	
R207-09		ERJ6GEYJ102	M.RESISTOR CH 1/10W 1K	3	
R210		ERJ6GEYJ153	M.RESISTOR CH 1/10W 15K	1	
R211		ERJ6GEYJ183	M.RESISTOR CH 1/10W 18K	1	
R212		ERJ6GEYJ683	M.RESISTOR CH 1/10W 68K	1	
R213-15		ERJ6GEYJ563	M.RESISTOR CH 1/10W 56K	3	
R216		ERJ6GEYJ105	M.RESISTOR CH 1/10W 1M	1	
R222-27		ERJ6GEYJ563	M.RESISTOR CH 1/10W 56K	6	
R228		ERJ6GEYJ104	M.RESISTOR CH 1/10W 100K	1	
R229		ERJ6GEYJ223	M.RESISTOR CH 1/10W 22K	1	
R230		ERJ6GEYJ563	M.RESISTOR CH 1/10W 56K	1	
R231		ERJ6GEYJ104	M.RESISTOR CH 1/10W 100K	1	
R232		VRE0034E272	M.RESISTOR CH 1/10W 2.7K	1	
R233		VRE0034E104	M.RESISTOR CH 1/10W 100K	1	
R234		VRE0034E272	M.RESISTOR CH 1/10W 2.7K	1	
R235		VRE0034E104	M.RESISTOR CH 1/10W 100K	1	
R236		ERJ6GEYJ563	M.RESISTOR CH 1/10W 56K	1	
R237		ERJ6GEYJ824	M.RESISTOR CH 1/10W 820K	1	
R238		ERJ6GEYJ102	M.RESISTOR CH 1/10W 1K	1	
R239		ERJ6GEYJ103	M.RESISTOR CH 1/10W 10K	1	
R240		ERJ6GEYJ222	M.RESISTOR CH 1/10W 2.2K	1	
R241		ERJ6GEYJ104	M.RESISTOR CH 1/10W 100K	1	
R242		ERJ6GEYJ334	M.RESISTOR CH 1/10W 330K	1	
R243		ERJ6GEYJ101	M.RESISTOR CH 1/10W 100	1	
R244,45		ERJ6GEYJ103	M.RESISTOR CH 1/10W 10K	2	
R246		ERJ6GEYJ102	M.RESISTOR CH 1/10W 1K	1	
R247		ERJ6GEYJ103	M.RESISTOR CH 1/10W 10K	1	
R248		ERJ6GEYJ562	M.RESISTOR CH 1/10W 5.6K	1	
R249		ERJ6GEYJ392	M.RESISTOR CH 1/10W 3.9K	1	
R250		ERJ6GEYJ184	M.RESISTOR CH 1/10W 180K	1	
R251		ERJ6GEYJ224	M.RESISTOR CH 1/10W 220K	1	

Refer to the P.C.BOARDS LIST, page 6-1-1, before using this page.

Ref.No.		Part No.	Part Name & Description	Pcs	Remarks
R252		ERJ6GEYJ153	M.RESISTOR CH 1/10W 15K	1	
R253		ERJ6GEYJ564	M.RESISTOR CH 1/10W 560K	1	
R254-58		ERJ6GEYJ103	M.RESISTOR CH 1/10W 10K	5	
R259		ERJ6GEYJ223	M.RESISTOR CH 1/10W 22K	1	
R260		ERJ6GEYJ393	M.RESISTOR CH 1/10W 39K	1	
R261		ERJ6GEYJ823	M.RESISTOR CH 1/10W 82K	1	
R262		ERJ6GEYJ123	M.RESISTOR CH 1/10W 12K	1	
R263		ERJ6GEYJ183	M.RESISTOR CH 1/10W 18K	1	
R264		ERJ6GEYJ333	M.RESISTOR CH 1/10W 33K	1	
R265		ERJ6GEYJ683	M.RESISTOR CH 1/10W 68K	1	
R266-69		ERJ6GEYJ563	M.RESISTOR CH 1/10W 56K	4	
R270		ERJ6GEYJ562	M.RESISTOR CH 1/10W 5.6K	1	
R271		ERJ6GEYJ103	M.RESISTOR CH 1/10W 10K	1	
R273		ERJ6GEYJ393	M.RESISTOR CH 1/10W 39K	1	
R274		ERJ6GEYJ181	M.RESISTOR CH 1/10W 180	1	
R275		ERJ6GEYJ563	M.RESISTOR CH 1/10W 56K	1	
R276,77		VRE0034E102	M.RESISTOR CH 1/10W 1K	2	
R278		ERJ6GEYJ472	M.RESISTOR CH 1/10W 4.7K	1	
R279-81		ERJ6GEYJ563	M.RESISTOR CH 1/10W 56K	3	
R282		ERJ6GEYJ124	M.RESISTOR CH 1/10W 120K	1	
R283		ERJ6GEYJ103	M.RESISTOR CH 1/10W 10K	1	
R284		ERJ6GEYJ272	M.RESISTOR CH 1/10W 2.7K	1	
R285		ERJ6GEYJ122	M.RESISTOR CH 1/10W 1.2K	1	
R286,87		ERJ6GEYJ472	M.RESISTOR CH 1/10W 4.7K	2	
R288		ERJ6GEYJ473	M.RESISTOR CH 1/10W 47K	1	
R289		ERJ6GEYJ823	M.RESISTOR CH 1/10W 82K	1	
R301		ERJ6GEYJ563	M.RESISTOR CH 1/10W 56K	1	
R302,03		ERJ6GEYJ103	M.RESISTOR CH 1/10W 10K	2	
R303		ERJ6GEY0R00	M.RESISTOR CH 1/10W 0	1	
R304		ERJ6GEYJ563	M.RESISTOR CH 1/10W 56K	1	
R305		ERJ6GEYJ104	M.RESISTOR CH 1/10W 100K	1	
R306		ERJ6GEYJ683	M.RESISTOR CH 1/10W 68K	1	
R307		ERJ6GEYJ223	M.RESISTOR CH 1/10W 22K	1	
R308		ERJ6GEYJ103	M.RESISTOR CH 1/10W 10K	1	
R309		ERJ6GEYJ472	M.RESISTOR CH 1/10W 4.7K	1	
R310		ERJ6GEYJ822	M.RESISTOR CH 1/10W 8.2K	1	
R311		ERJ6GEYJ392	M.RESISTOR CH 1/10W 3.9K	1	
R312		ERJ6GEYJ153	M.RESISTOR CH 1/10W 15K	1	
R313		ERJ6GEYJ332	M.RESISTOR CH 1/10W 3.3K	1	
R314		ERJ6GEYJ151	M.RESISTOR CH 1/10W 150	1	
R315,16		ERJ6GEYJ103	M.RESISTOR CH 1/10W 10K	2	
R317		ERJ6GEYJ683	M.RESISTOR CH 1/10W 68K	1	
R318		ERJ6GEYJ103	M.RESISTOR CH 1/10W 10K	1	
R319		ERJ6GEYJ273	M.RESISTOR CH 1/10W 27K	1	
R320		ERJ6GEYJ104	M.RESISTOR CH 1/10W 100K	1	
R321		ERJ6GEYJ223	M.RESISTOR CH 1/10W 22K	1	
R322		ERJ6GEYJ563	M.RESISTOR CH 1/10W 56K	1	
R325,26		VRE0034E332	M.RESISTOR CH 1/10W 3.3K	2	
R327		ERJ6GEYJ223	M.RESISTOR CH 1/10W 22K	1	
R328		ERJ6GEYJ104	M.RESISTOR CH 1/10W 100K	1	
R329		ERJ6GEYJ393	M.RESISTOR CH 1/10W 39K	1	
R330		ERJ6GEYJ334	M.RESISTOR CH 1/10W 330K	1	
R331		ERJ6GEYJ474	M.RESISTOR CH 1/10W 470K	1	
R332,33		ERJ6GEYJ104	M.RESISTOR CH 1/10W 100K	2	
R334		ERJ6GEYJ105	M.RESISTOR CH 1/10W 1M	1	
R335		ERJ6GEYJ684	M.RESISTOR CH 1/10W 680K	1	
R337,38		ERJ6GEYJ103	M.RESISTOR CH 1/10W 10K	2	
R339,40		VRE0034E332	M.RESISTOR CH 1/10W 3.3K	2	
R341		ERJ6GEYJ223	M.RESISTOR CH 1/10W 22K	1	
R342		ERJ6GEYJ104	M.RESISTOR CH 1/10W 100K	1	
R343		ERJ6GEYJ473	M.RESISTOR CH 1/10W 47K	1	
R344		ERJ6GEYJ334	M.RESISTOR CH 1/10W 330K	1	
R345		ERJ6GEYJ474	M.RESISTOR CH 1/10W 470K	1	
R346		ERJ6GEYJ104	M.RESISTOR CH 1/10W 100K	1	
R347		ERJ6GEYJ105	M.RESISTOR CH 1/10W 1M	1	
R348		ERJ6GEYJ684	M.RESISTOR CH 1/10W 680K	1	
R349,50		ERJ6GEYJ103	M.RESISTOR CH 1/10W 10K	2	
R351		ERJ6GEYJ472	M.RESISTOR CH 1/10W 4.7K	1	
R352-55		ERJ6GEYJ103	M.RESISTOR CH 1/10W 10K	4	
R356		ERJ6GEYJ222	M.RESISTOR CH 1/10W 2.2K	1	
R357		ERJ6GEYJ223	M.RESISTOR CH 1/10W 22K	1	
R358		ERJ6GEYJ104	M.RESISTOR CH 1/10W 100K	1	
R359,60		ERJ6GEYJ103	M.RESISTOR CH 1/10W 10K	2	
R362,63		ERJ6GEYJ103	M.RESISTOR CH 1/10W 10K	2	
R365		ERJ6GEYJ104	M.RESISTOR CH 1/10W 100K	1	

Ref.No.		Part No.	Part Name & Description	Pcs	Remarks
R366		ERJ6GEYJ103	M.RESISTOR CH 1/10W 10K	1	
R366		ERJ6GEYJ473	M.RESISTOR CH 1/10W 47K	1	
R367,68		ERJ6GEYJ563	M.RESISTOR CH 1/10W 56K	2	
R369		ERJ6GEYJ104	M.RESISTOR CH 1/10W 100K	1	
R370,71		ERJ6GEYJ103	M.RESISTOR CH 1/10W 10K	2	
R373,74		ERJ6GEYJ103	M.RESISTOR CH 1/10W 10K	2	
R376		ERJ6GEYJ104	M.RESISTOR CH 1/10W 100K	1	
R378,79		ERJ6GEYJ563	M.RESISTOR CH 1/10W 56K	2	
R380		ERJ6GEYJ103	M.RESISTOR CH 1/10W 10K	1	
R381		ERJ6GEYJ473	M.RESISTOR CH 1/10W 47K	1	
R382		ERJ6GEYJ683	M.RESISTOR CH 1/10W 68K	1	
R383		ERJ6GEYJ152	M.RESISTOR CH 1/10W 1.5K	1	
R386		ERJ6GEYJ182	M.RESISTOR CH 1/10W 1.8K	1	
R388		ERJ6GEYJ273	M.RESISTOR CH 1/10W 27K	1	
R389		ERJ6GEYJ153	M.RESISTOR CH 1/10W 15K	1	
R390		ERJ6GEYJ273	M.RESISTOR CH 1/10W 27K	1	
R391		ERJ6GEYJ153	M.RESISTOR CH 1/10W 15K	1	
R392,93		ERJ6GEYJ103	M.RESISTOR CH 1/10W 10K	2	
R394,95		VRE0034E102	M.RESISTOR CH 1/10W 1K	2	
R396,97		VRE0034E472	M.RESISTOR CH 1/10W 4.7K	2	
R398		ERJ6GEYJ183	M.RESISTOR CH 1/10W 18K	1	
R424		ERJ6GEYJ222	M.RESISTOR CH 1/10W 2.2K	1	
R427		ERJ6GEYJ333	M.RESISTOR CH 1/10W 33K	1	
R428		ERJ6GEYJ223	M.RESISTOR CH 1/10W 22K	1	
R432,33		ERJ6GEYJ393	M.RESISTOR CH 1/10W 39K	2	
R434		ERJ6GEYJ331	M.RESISTOR CH 1/10W 330	1	
R435		ERJ6GEYJ103	M.RESISTOR CH 1/10W 10K	1	
R437		ERJ6GEYJ684	M.RESISTOR CH 1/10W 680K	1	
R440		ERJ6GEYJ562	M.RESISTOR CH 1/10W 5.6K	1	
R441,42		ERJ6GEYJ105	M.RESISTOR CH 1/10W 1M	2	
R443		ERJ6GEYJ223	M.RESISTOR CH 1/10W 22K	1	
R445		ERJ6GEY0R00	M.RESISTOR CH 1/10W 0	1	
R446,47		ERJ6GEYJ562	M.RESISTOR CH 1/10W 5.6K	2	
R448		ERJ6GEYG105	M.RESISTOR CH 1/10W 1M	1	
R449		ERJ6GEYJ105	M.RESISTOR CH 1/10W 1M	1	
R460		ERJ6GEYJ103	M.RESISTOR CH 1/10W 10K	1	
R461		ERJ6GEYG103	M.RESISTOR CH 1/10W 10K	1	
R462		ERJ6GEYJ223	M.RESISTOR CH 1/10W 22K	1	
R463		ERJ6GEYJ331	M.RESISTOR CH 1/10W 330	1	
R464		ERJ6GEY0R00	M.RESISTOR CH 1/10W 0	1	
R465		ERJ6GEYJ223	M.RESISTOR CH 1/10W 22K	1	
R466		ERJ6GEYG103	M.RESISTOR CH 1/10W 10K	1	
R467		ERJ6GEYJ473	M.RESISTOR CH 1/10W 47K	1	
R469		ERJ6GEYJ564	M.RESISTOR CH 1/10W 560K	1	
R470		ERJ6GEYJ394	M.RESISTOR CH 1/10W 390K	1	
R477		ERJ6GEYJ562	M.RESISTOR CH 1/10W 5.6K	1	
R501		ERJ6GEYJ102	M.RESISTOR CH 1/10W 1K	1	
R502		ERJ6GEYJ103	M.RESISTOR CH 1/10W 10K	1	
R503		ERJ6GEYJ102	M.RESISTOR CH 1/10W 1K	1	
R504-07		ERJ6GEYJ821	M.RESISTOR CH 1/10W 820	4	
R508		ERJ6GEYJ473	M.RESISTOR CH 1/10W 47K	1	
R509-12		ERJ6GEYJ391	M.RESISTOR CH 1/10W 390	4	
R513		ERJ6GEYJ103	M.RESISTOR CH 1/10W 10K	1	
R514		ERJ6GEYJ224	M.RESISTOR CH 1/10W 220K	1	
R515		ERJ6GEYJ273	M.RESISTOR CH 1/10W 27K	1	
R516		ERJ6GEYJ103	M.RESISTOR CH 1/10W 10K	1	
R517		ERJ6GEYJ272	M.RESISTOR CH 1/10W 2.7K	1	
R518		ERJ6GEYJ104	M.RESISTOR CH 1/10W 100K	1	
R519		ERJ6GEYJ392	M.RESISTOR CH 1/10W 3.9K	1	
R520		ERJ6GEYJ333	M.RESISTOR CH 1/10W 33K	1	
R521,22		ERJ6GEYJ224	M.RESISTOR CH 1/10W 220K	2	
R523		ERX12SJR47	M.RESISTOR 1/2W 0.47	1	
R524		ERJ6GEYJ273	M.RESISTOR CH 1/10W 27K	1	
R525		ERJ6GEYJ272	M.RESISTOR CH 1/10W 2.7K	1	
R526		ERJ6GEYJ103	M.RESISTOR CH 1/10W 10K	1	
R527		ERJ6GEYJ104	M.RESISTOR CH 1/10W 100K	1	
R528		ERJ6GEYJ224	M.RESISTOR CH 1/10W 220K	1	
R529		ERJ6GEYJ392	M.RESISTOR CH 1/10W 3.9K	1	
R530		ERJ6GEYJ223	M.RESISTOR CH 1/10W 22K	1	
R531		ERJ6GEYJ224	M.RESISTOR CH 1/10W 220K	1	
R532		ERX12SJR68	M.RESISTOR 1/2W 0.68	1	
R533		ERJ6GEYJ224	M.RESISTOR CH 1/10W 220K	1	
R534		ERJ6GEYJ273	M.RESISTOR CH 1/10W 27K	1	
R535		ERJ6GEYJ103	M.RESISTOR CH 1/10W 10K	1	
R536		ERJ6GEYJ104	M.RESISTOR CH 1/10W 100K	1	

Refer to the P.C.BOARDS LIST, page 6-1-1, before using this page.

Ref.No.		Part No.	Part Name & Description	Pcs	Remarks
R537		ERX12SJR47	M.RESISTOR 1/2W 0.47	1	
R538-40		ERJ6GEYJ224	M.RESISTOR CH 1/10W 220K	3	
R541		ERJ6GEYJ272	M.RESISTOR CH 1/10W 2.7K	1	
R542		ERJ6GEYJ223	M.RESISTOR CH 1/10W 22K	1	
R543		ERJ6GEYJ273	M.RESISTOR CH 1/10W 27K	1	
R544		ERJ6GEYJ104	M.RESISTOR CH 1/10W 100K	1	
R545		ERJ6GEYJ103	M.RESISTOR CH 1/10W 10K	1	
R546		ERX12SJR47	M.RESISTOR 1/2W 0.47	1	
R547-49		ERJ6GEYJ224	M.RESISTOR CH 1/10W 220K	3	
R550		ERJ6GEYJ272	M.RESISTOR CH 1/10W 2.7K	1	
R551		ERJ6GEYJ223	M.RESISTOR CH 1/10W 22K	1	
R553		ERJ6GEY0R00	M.RESISTOR CH 1/10W 0	1	
R554		ERJ6GEYJ272	M.RESISTOR CH 1/10W 2.7K	1	
R555-57		ERJ6GEY0R00	M.RESISTOR CH 1/10W 0	3	
R600		ERJ6GEYJ271	M.RESISTOR CH 1/10W 270	1	
R601		ERJ6GEYJ105	M.RESISTOR CH 1/10W 1M	1	
R603		ERJ6GEYJ271	M.RESISTOR CH 1/10W 270	1	
R604		ERJ6GEYJ105	M.RESISTOR CH 1/10W 1M	1	
R700		ERJ6GEYJ103	M.RESISTOR CH 1/10W 10K	1	
R701		ERJ6GEYJ473	M.RESISTOR CH 1/10W 47K	1	
R702		ERJ6GEYJ103	M.RESISTOR CH 1/10W 10K	1	
R703		ERJ6GEYJ473	M.RESISTOR CH 1/10W 47K	1	
R704		ERJ6GEYJ103	M.RESISTOR CH 1/10W 10K	1	
R705		ERJ6GEYJ183	M.RESISTOR CH 1/10W 18K	1	
R706		ERJ6GEYJ473	M.RESISTOR CH 1/10W 47K	1	
R707		ERJ6GEYJ474	M.RESISTOR CH 1/10W 470K	1	
R708		ERJ6GEYJ331	M.RESISTOR CH 1/10W. 330	1	
R709		ERJ6GEYJ102	M.RESISTOR CH 1/10W 1K	1	
R710		ERJ6GEYJ392	M.RESISTOR CH 1/10W 3.9K	1	
R711		ERJ6GEYJ393	M.RESISTOR CH 1/10W 39K	1	
R712		ERJ6GEYJ102	M.RESISTOR CH 1/10W 1K	1	
R713,14		ERJ6GEYG332	M.RESISTOR CH 1/10W 3.3K	2	
R715		ERJ6GEYG222	M.RESISTOR CH 1/10W 2.2K	1	
R716,17		ERJ6GEYJ332	M.RESISTOR CH 1/10W 3.3K	2	
R718		ERJ6GEYJ103	M.RESISTOR CH 1/10W 10K	1	
R719-26		ERJ6GEYG273	M.RESISTOR CH 1/10W 27K	8	
R727-40		ERJ6GEYJ473	M.RESISTOR CH 1/10W 47K	14	
R741		ERJ6GEYJ103	M.RESISTOR CH 1/10W 10K	1	
R742,43		ERJ6GEYJ473	M.RESISTOR CH 1/10W 47K	2	
R744		ERJ6GEYJ103	M.RESISTOR CH 1/10W 10K	1	
R746-50		ERJ6GEYJ103	M.RESISTOR CH 1/10W 10K	5	
R751		ERJ6GEYJ272	M.RESISTOR CH 1/10W 2.7K	1	
R752-54		ERJ6GEYJ561	M.RESISTOR CH 1/10W 560	3	
R755		ERJ6GEYJ223	M.RESISTOR CH 1/10W 22K	1	
R756-58		ERJ6GEYG273	M.RESISTOR CH 1/10W 27K	3	
R759		ERJ6GEYG823	M.RESISTOR CH 1/10W 82K	1	
R760		ERJ6GEYG682	M.REISITOR CH 1/10W 6.8K	1	
R761		ERJ6GEYG153	M.RESISTOR CH 1/10W 15K	1	
R762		ERJ6GEYG124	M.RESISTOR CH 1/10W 120K	1	
R763		ERJ6GEYJ394	M.RESISTOR CH 1/10W 390K	1	
R764		ERJ6GEYJ124	M.RESISTOR CH 1/10W 120K	1	
R765		ERJ6GEYJ394	M.RESISTOR CH 1/10W 390K	1	
R766,67		ERJ6GEYJ273	M.RESISTOR CH 1/10W 27K	2	
R768		ERJ6GEYG182	M.RESISTOR CH 1/10W 1.8K	1	
R769		ERJ6GEYJ154	M.RESISTOR CH 1/10W 150K	1	
R770		ERJ6GEYJ393	M.RESISTOR CH 1/10W 39K	1	
R771		ERJ6GEYG682	M.REISITOR CH 1/10W 6.8K	1	
R772-74		ERJ6GEYG273	M.RESISTOR CH 1/10W 27K	3	
R775		ERJ6GEYG823	M.RESISTOR CH 1/10W 82K	1	
R776		ERJ6GEYG682	M.REISITOR CH 1/10W 6.8K	1	
R777,78		ERJ6GEYG564	M.RESISTOR CH 1/10W 560K	2	
R779		ERJ6GEYJ564	M.RESISTOR CH 1/10W 560K	1	
R780,81		ERJ6GEYG333	M.RESISTOR CH 1/10W 33K	2	
R782		ERJ6GEYJ564	M.RESISTOR CH 1/10W 560K	1	
R783		ERJ6GEYG153	M.RESISTOR CH 1/10W 15K	1	
R784		ERJ6GEYG124	M.RESISTOR CH 1/10W 120K	1	
R785		ERJ6GEYJ124	M.RESISTOR CH 1/10W 120K	1	
R786,87		ERJ6GEYJ394	M.RESISTOR CH 1/10W 390K	2	
R788,89		ERJ6GEYJ273	M.RESISTOR CH 1/10W 27K	2	
R790		ERJ6GEYG182	M.RESISTOR CH 1/10W 1.8K	1	
R791		ERJ6GEYJ154	M.RESISTOR CH 1/10W 150K	1	
R792		ERJ6GEYJ393	M.RESISTOR CH 1/10W 39K	1	
R793		ERJ6GEYG682	M.REISITOR CH 1/10W 6.8K	1	
R794,95		ERJ6GEYG273	M.RESISTOR CH 1/10W 27K	2	
R796		ERJ6GEYJ123	M.RESISTOR CH 1/10W 12K	1	

Ref.No.		Part No.	Part Name & Description	Pcs	Remarks
R797,98		ERJ6GEYJ104	M.RESISTOR CH 1/10W 100K	2	
R799		ERJ6GEYJ393	M.RESISTOR CH 1/10W 39K	1	
R800		ERJ6GEYJ103	M.RESISTOR CH 1/10W 10K	1	
R801,02		VRE0034E103	M.RESISTOR CH 1/10W 10K	2	
R803		ERJ6GEYJ474	M.RESISTOR CH 1/10W 470K	1	
R804,05		ERJ6GEYJ224	M.RESISTOR CH 1/10W 220K	2	
R806		ERJ6GEYJ272	M.RESISTOR CH 1/10W 2.7K	1	
R807		ERJ6GEYJ224	M.RESISTOR CH 1/10W 220K	1	
R808		ERJ6GEYJ272	M.RESISTOR CH 1/10W 2.7K	1	
R809		ERJ6GEYJ103	M.RESISTOR CH 1/10W 10K	1	
R810,11		VRE0034E103	M.RESISTOR CH 1/10W 10K	2	
R812		ERJ6GEYJ474	M.RESISTOR CH 1/10W 470K	1	
R813,14		ERJ6GEYJ224	M.RESISTOR CH 1/10W 220K	2	
R815		ERJ6GEYJ272	M.RESISTOR CH 1/10W 2.7K	1	
R816		ERJ6GEYJ224	M.RESISTOR CH 1/10W 220K	1	
R817		ERJ6GEYJ272	M.RESISTOR CH 1/10W 2.7K	1	
RA700,01		VCR0202	RESISTOR ARRAY	2	
RA702		EXBLD8103G	COMBI.R-R 10K	1	
SW1,W2		VSR0032	VOLTAGE SELECT SWITCH	2	
SW700		VSS0207	SWITCH	1	
TP3-P7		VJR0646	TEST POINT	5	
TP13		VJR0646	TEST POINT	1	
TP15-17		VJR0646	TEST POINT	3	
TP19,20		VJR0646	TEST POINT	2	
TP102-05		VJR0646	TEST POINT	4	
TP108-18		VJR0646	TEST POINT	11	
TP201,02		VJR0646	TEST POINT	2	
TP302-04		VJR0646	TEST POINT	3	
TP306		VJR0646	TEST POINT	1	
TP309-12		VJR0646	TEST POINT	4	
TP700-14		VJR0646	TEST POINT	15	
TPG1-G3		VJR0646	TEST POINT	3	
VC101		ECV1ZW30X53	V.CAPACITOR 30P	1	
VR1		VRV0109B503	V.RESISTOR 50K	1	
VR3		VRV0109B503	V.RESISTOR 50K	1	
VR101		VRV0109B203	V.RESISTOR 20K	1	
VR102		VRV0109B103	V.RESISTOR 10K	1	
VR103		VRV0109B203	V.RESISTOR 20K	1	
VR104		VRV0109B502	V.RESISTOR 5K	1	
VR105		VRV0109B104	V.RESISTOR 100K	1	
VR301		VRV0109B502	V.RESISTOR 5K	1	
VR302,03		VRV0109B202	V.RESISTOR 2K	2	
VR304-07		VRV0109B503	V.RESISTOR 50K	4	
VR308		VRV0109B202	V.RESISTOR 2K	1	
VR309		VRV0109B503	V.RESISTOR 50K	1	
VR700		VRV0109B202	V.RESISTOR 2K	1	
VR701		VRV0109B103	V.RESISTOR 10K	1	
VR702,03		VRV0064B503	V.RESISTOR 50K	2	
VR704-07		VRV0064B203	V.RESISTOR 20K	4	
VR708,09		VRV0109B102	V.RESISTOR 1K	2	
X101		VSX0217	CRYSTAL OSCILLATOR	1	
X501		VSX0136	CRYSTAL OSCILLATOR	1	
X600		VSX0126	CRYSTAL OSCILLATOR	1	
X601		VSX0086	CRYSTAL OSCILLATOR	1	
X700		VSX0257	CRYSTAL OSCILLATOR	1	

Refer to the P.C.BOARDS LIST, page 6-1-1, before using this page.

Ref.No.		Part No.	Part Name & Description	Pcs	Remarks
			MISCELLANEOUS		
		VML2143	CARD PULLER	1	
		VML2144	CARD PULLER	1	
		VMS4174	PIN	6	
		VMZ1091	BARRIER	1	
		VMZ1547	BARRIER	1	
		VSC2286	SHIELD CASE	1	
		VSC3056	SHIELD CASE	1	
		VXA3966	P.C.B. SHIELD PLATE	1	
		XNG26E	NUT	4	
		XYNV3+K6FR	SCREW	6	
		XYN26+C12	SCREW	4	

Ref.No.		Part No.	Part Name & Description	Pcs	Remarks
	■	VEP84095A	P.C.BOARD W/COMPONENT		FOR AU-65-P
			W6 AUDIO		
			CAPACITORS		
C1,C2		ECEA1CU470	E.CAPACITOR 16V 47U	2	
C3		ECEA0JU101	E.CAPACITOR 6.3V 100U	1	
C4		ECUM1E104ZFN	C.CAPACITOR CH 25V 0.1U	1	
C5		ECEA1CU100	E.CAPACITOR 16V 10U	1	
C6		ECUM1E473KBN	C.CAPACITOR CH 25V 0.047U	1	
C7		ECUM1H222KBN	C.CAPACITOR CH 50V 2200P	1	
C8		ECUM1E104ZFN	C.CAPACITOR CH 25V 0.1U	1	
C9		ECEA1CU100	E.CAPACITOR 16V 10U	1	
C10		ECEA1CN100S	E.CAPACITOR 16V 10U	1	
C11		ECUM1H122KBN	C.CAPACITOR CH 50V 1200P	1	
C12		ECEA1CU100	E.CAPACITOR 16V 10U	1	
C13,14		ECEA1CU470	E.CAPACITOR 16V 47U	2	
C17		ECUM1H822KBN	C.CAPACITOR CH 50V 8200P	1	
C101		ECUM1H220JCN	C.CAPACITOR CH 50V 22P	1	
C102		ECEA1CBZ100	E.CAPACITOR 16V 10U	1	
C103		ECUM1H470JCN	C.CAPACITOR CH 50V 47P	1	
C104		ECEA1CBZ100	E.CAPACITOR 16V 10U	1	
C105		ECEA1CPZ470	E.CAPACITOR 16V 47U	1	
C106		ECUM1H470JCN	C.CAPACITOR CH 50V 47P	1	
C107		ECUM1E104ZFN	C.CAPACITOR CH 25V 0.1U	1	
C108		ECEA1CPZ101	E.CAPACITOR 16V 100U	1	
C109		ECEA1CBZ470	E.CAPACITOR 16V 47U	1	
C110		ECEA1CPZ101	E.CAPACITOR 16V 100U	1	
C111		ECUM1E104ZFN	C.CAPACITOR CH 25V 0.1U	1	
C112,13		ECEA1CPZ101	E.CAPACITOR 16V 100U	2	
C114		ECEA1CBZ100	E.CAPACITOR 16V 10U	1	
C115		ECUM1H220JCN	C.CAPACITOR CH 50V 22P	1	
C116,17		ECEA1CBZ100	E.CAPACITOR 16V 10U	2	
C118		ECEA1CPZ470	E.CAPACITOR 16V 47U	1	
C120		ECUM1H470JCN	C.CAPACITOR CH 50V 47P	1	
C121		ECUM1H820JCN	C.CAPACITOR CH 50V 82P	1	
C122		ECUM1H151JCN	C.CAPACITOR CH 50V 150P	1	
C124		ECUM1H470JCN	C.CAPACITOR CH 50V 47P	1	
C125		ECEA0JPZ471	E.CAPACITOR 6.3V 470U	1	
C127,28		ECEA1CPZ470	E.CAPACITOR 16V 47U	2	
C129		ECQM1H473JF	P.CAPACITOR 50V 0.047U	1	
C130		ECUM1H331JCN	C.CAPACITOR CH 50V 330P	1	
C131,32		ECEA1CPZ470	E.CAPACITOR 16V 47U	2	
C133		ECUM1H562KBN	C.CAPACITOR CH 50V 5600P	1	
C134,35		ECEA1CBZ100	E.CAPACITOR 16V 10U	2	
C136		ECQP1H472FZ	P.CAPACITOR 50V 4700P	1	
C137		ECEA1CPZ100	E.CAPACITOR 16V 10U	1	
C138		ECQM1H473JF	P.CAPACITOR 50V 0.047U	1	
C139		ECEA1HPZR22	E.CAPACITOR 50V 0.22U	1	
C140,41		ECEA1HPZR68	E.CAPACITOR 50V 0.98U	2	
C142		ECEA1HPZR22	E.CAPACITOR 50V 0.22U	1	
C143		ECQM1H473JF	P.CAPACITOR 50V 0.047U	1	
C144		ECEA1CPZ100	E.CAPACITOR 16V 10U	1	
C145		ECQP1H472FZ	P.CAPACITOR 50V 4700P	1	
C146		ECEA1CBZ100	E.CAPACITOR 16V 10U	1	
C147		ECQP1H103FZ	P.CAPACITOR 50V 0.01U	1	
C148,49		ECQM1H394JF	P.CAPACITOR 50V 0.39U	2	
C201		ECUM1H391JCN	C.CAPACITOR CH 50V 390P	1	
C202		ECEA1CBZ100	E.CAPACITOR 16V 10U	1	
C203		ECUM1H272KBN	C.CAPACITOR CH 50V 2700P	1	
C204,05		ECEA1CBZ100	E.CAPACITOR 16V 10U	2	
C206		ECEA1CBZ470	E.CAPACITOR 16V 47U	1	
C207		ECUM1H682KBN	C.CAPACITOR CH 50V 6800P	1	
C208		ECQM1H473JF	P.CAPACITOR 50V 0.047U	1	
C209		ECEA1CBZ100	E.CAPACITOR 16V 10U	1	
C210		ECQM1H394JF	P.CAPACITOR 50V 0.39U	1	
C211		ECUM1H222KBN	C.CAPACITOR CH 50V 2200P	1	
C212		ECUM1H472KBN	C.CAPACITOR CH 50V 4700P	1	
C213		ECUM1H682KBN	C.CAPACITOR CH 50V 6800P	1	

Ref.No.		Part No.	Part Name & Description	Pcs	Remarks
C214		ECUM1H103KBN	C.CAPACITOR CH 50V 0.01U	1	
C215		ECUM1E153KBN	C.CAPACITOR CH 25V 0.015U	1	
C216		ECEA1CBZ100	E.CAPACITOR 16V 10U	1	
C217		ECUM1H152KBN	C.CAPACITOR CH 50V 1500P	1	
C218		ECUM1H122KBN	C.CAPACITOR CH 50V 1200P	1	
C219		ECUM1H152KBN	C.CAPACITOR CH 50V 1500P	1	
C220		ECUM1H102KBN	C.CAPACITOR CH 50V 1000P	1	
C301		ECUM1H220JCN	C.CAPACITOR CH 50V 22P	1	
C302		ECEA1CBZ100	E.CAPACITOR 16V 10U	1	
C303		ECUM1H470JCN	C.CAPACITOR CH 50V 47P	1	
C304		ECEA1CBZ100	E.CAPACITOR 16V 10U	1	
C305		ECEA1CPZ470	E.CAPACITOR 16V 47U	1	
C306		ECUM1H470JCN	C.CAPACITOR CH 50V 47P	1	
C307		ECUM1E104ZFN	C.CAPACITOR CH 25V 0.1U	1	
C308		ECEA1CPZ101	E.CAPACITOR 16V 100U	1	
C309		ECEA1CBZ470	E.CAPACITOR 16V 47U	1	
C310		ECEA1CPZ101	E.CAPACITOR 16V 100U	1	
C311		ECUM1E104ZFN	C.CAPACITOR CH 25V 0.1U	1	
C312,13		ECEA1CPZ101	E.CAPACITOR 16V 100U	2	
C314		ECEA1CBZ100	E.CAPACITOR 16V 10U	1	
C315		ECUM1H220JCN	C.CAPACITOR CH 50V 22P	1	
C316,17		ECEA1CBZ100	E.CAPACITOR 16V 10U	2	
C318		ECEA1CPZ470	E.CAPACITOR 16V 47U	1	
C320		ECUM1H470JCN	C.CAPACITOR CH 50V 47P	1	
C321		ECUM1H820JCN	C.CAPACITOR CH 50V 82P	1	
C322		ECUM1H151JCN	C.CAPACITOR CH 50V 150P	1	
C324		ECUM1H470JCN	C.CAPACITOR CH 50V 47P	1	
C325		ECEA0JPZ471	E.CAPACITOR 6.3V 470U	1	
C327,28		ECEA1CPZ470	E.CAPACITOR 16V 47U	2	
C329		ECQM1H473JF	P.CAPACITOR 50V 0.047U	1	
C330		ECUM1H331JCN	C.CAPACITOR CH 50V 330P	1	
C331,32		ECEA1CPZ470	E.CAPACITOR 16V 47U	2	
C333		ECUM1H562KBN	C.CAPACITOR CH 50V 5600P	1	
C334,35		ECEA1CBZ100	E.CAPACITOR 16V 10U	2	
C336		ECQP1H472FZ	P.CAPACITOR 50V 4700P	1	
C337		ECEA1CPZ100	E.CAPACITOR 16V 10U	1	
C338		ECQM1H473JF	P.CAPACITOR 50V 0.047U	1	
C339		ECEA1HPZR22	E.CAPACITOR 50V 0.22U	1	
C340,41		ECEA1HPZR68	E.CAPACITOR 50V 0.98U	2	
C342		ECEA1HPZR22	E.CAPACITOR 50V 0.22U	1	
C343		ECQM1H473JF	P.CAPACITOR 50V 0.047U	1	
C344		ECEA1CPZ100	E.CAPACITOR 16V 10U	1	
C345		ECQP1H472FZ	P.CAPACITOR 50V 4700P	1	
C346		ECEA1CBZ100	E.CAPACITOR 16V 10U	1	
C347		ECQP1H103FZ	P.CAPACITOR 50V 0.01U	1	
C348,49		ECQM1H394JF	P.CAPACITOR 50V 0.39U	2	
C401		ECUM1H391JCN	C.CAPACITOR CH 50V 390P	1	
C402		ECEA1CBZ100	E.CAPACITOR 16V 10U	1	
C403		ECUM1H272KBN	C.CAPACITOR CH 50V 2700P	1	
C404,05		ECEA1CBZ100	E.CAPACITOR 16V 10U	2	
C406		ECEA1CBZ470	E.CAPACITOR 16V 47U	1	
C407		ECUM1H682KBN	C.CAPACITOR CH 50V 6800P	1	
C408		ECQM1H473JF	P.CAPACITOR 50V 0.047U	1	
C409		ECEA1CBZ100	E.CAPACITOR 16V 10U	1	
C410		ECQM1H394JF	P.CAPACITOR 50V 0.39U	1	
C411		ECUM1H222KBN	C.CAPACITOR CH 50V 2200P	1	
C412		ECUM1H472KBN	C.CAPACITOR CH 50V 4700P	1	
C413		ECUM1H682KBN	C.CAPACITOR CH 50V 6800P	1	
C414		ECUM1H103KBN	C.CAPACITOR CH 50V 0.01U	1	
C415		ECUM1E153KBN	C.CAPACITOR CH 25V 0.015U	1	
C416		ECEA1CBZ100	E.CAPACITOR 16V 10U	1	
C417		ECUM1H152KBN	C.CAPACITOR CH 50V 1500P	1	
C418		ECUM1H122KBN	C.CAPACITOR CH 50V 1200P	1	
C419		ECUM1H152KBN	C.CAPACITOR CH 50V 1500P	1	
C420		ECUM1H102KBN	C.CAPACITOR CH 50V 1000P	1	
C501		ECEA1CU101	E.CAPACITOR 16V 100U	1	
C503		ECEA1CU220	E.CAPACITOR 16V 22U	1	
C551		ECUM1E104ZFN	C.CAPACITOR CH 25V 0.1U	1	
C553		ECEA1AU101	E.CAPACITOR 10V 100U	1	
C554,55		ECUM1E104ZFN	C.CAPACITOR CH 25V 0.1U	2	
C556		ECEA1VU101	E.CAPACITOR 35V 100U	1	
C557		ECEA1EU101	E.CAPACITOR 25V 100U	1	
C558		ECQM1H104JF	P.CAPACITOR 50V 0.1U	1	
C559,60		ECUM1H103KBN	C.CAPACITOR CH 50V 0.01U	2	
C561		ECEA1EU100	E.CAPACITOR 25V 10U	1	

Refer to the P.C.BOARDS LIST, page 6-1-1, before using this page.

Ref.No.		Part No.	Part Name & Description	Pcs	Remarks
C562		ECCD2H181J	C.CAPACITOR 500V 180P	1	
C563		ECCD2H271J	C.CAPACITOR 500V 270P	1	
C564		ECQM1H104JF	P.CAPACITOR 50V 0.1U	1	
C565,66		ECUM1H103KBN	C.CAPACITOR CH 50V 0.01U	2	
C567		ECEA1EU100	E.CAPACITOR 25V 10U	1	
C568		ECCD2H181J	C.CAPACITOR 500V 180P	1	
C569		ECCD2H271J	C.CAPACITOR 500V 270P	1	
C570		ECQM1H104JF	P.CAPACITOR 50V 0.1U	1	
C571-73		ECUM1H103KBN	C.CAPACITOR CH 50V 0.01U	3	
C574		ECEA1EU100	E.CAPACITOR 25V 10U	1	
C575		ECQM1H104JF	P.CAPACITOR 50V 0.1U	1	
C576		VCF2JAB182JE	P.CAPACITOR V	1	
C577		ECQM1H104JF	P.CAPACITOR 50V 0.1U	1	
C578-80		ECUM1H103KBN	C.CAPACITOR CH 50V 0.01U	3	
C581		ECEA1EU100	E.CAPACITOR 25V 10U	1	
C582		ECQM1H104JF	P.CAPACITOR 50V 0.1U	1	
C583		VCF2JAB182JE	P.CAPACITOR V	1	
C584		ECQM1H104JF	P.CAPACITOR 50V 0.1U	1	
C585,86		ECUM1H103KBN	C.CAPACITOR CH 50V 0.01U	2	
C587		ECEA1EU100	E.CAPACITOR 25V 10U	1	
C588		VCF2JAB102JE	P.CAPACITOR V	1	
C589		ECCD2H680K	C.CAPACITOR 500V 68P	1	
C590		ECEA1AU470	E.CAPACITOR 10V 47U	1	
C591		ECQM1H104JF	P.CAPACITOR 50V 0.1U	1	
C592-94		ECUM1H103KBN	C.CAPACITOR CH 50V 0.01U	3	
C595		ECEA1EU100	E.CAPACITOR 25V 10U	1	
C596		VCF2JAB222JE	P.CAPACITOR V	1	
C597		ECUM1E104ZFN	C.CAPACITOR CH 25V 0.1U	1	
C598,99		ECUM1H103KBN	C.CAPACITOR CH 50V 0.01U	2	
C600		ECEA1EU100	E.CAPACITOR 25V 10U	1	
C601		VCF2JAB222JE	P.CAPACITOR V	1	
C602		ECUM1E104ZFN	C.CAPACITOR CH 25V 0.1U	1	
C603,04		ECUM1H103KBN	C.CAPACITOR CH 50V 0.01U	2	
C605		ECEA1EU100	E.CAPACITOR 25V 10U	1	
C606		VCF2JAB222JE	P.CAPACITOR V	1	
C607,08		ECUM1H330JCN	C.CAPACITOR CH 50V 33P	2	
C609		ECEA1HU3R3	E.CAPACITOR 50V 3.3U	1	
C610-12		ECUM1H102KBN	C.CAPACITOR CH 50V 1000P	3	
C701		ECEA1CBZ470	E.CAPACITOR 16V 47U	1	
C702		ECUM1H182KBN	C.CAPACITOR CH 50V 1800P	1	
C703		ECUM1H821JCN	C.CAPACITOR CH 50V 820P	1	
C712		ECEA1HPZ4R7	E.CAPACITOR 50V 4.7U	1	
C713		ECEA1HPZ3R3	E.CAPACITOR 50V 3.3U	1	
C714		ECQM1H682JF	P.CAPACITOR 50V 6800P	1	
C715		ECQM1H102JF	P.CAPACITOR 50V 1000P	1	
C716		ECQM1H223JF	P.CAPACITOR 50V 0.022U	1	
C717		ECEA1CPZ100	E.CAPACITOR 16V 10U	1	
C719		ECEA1HPZ4R7	E.CAPACITOR 50V 4.7U	1	
C720		ECEA1CPZ470	E.CAPACITOR 16V 47U	1	
C721		ECQM1H103JF	P.CAPACITOR 50V 0.01U	1	
C722		ECQM1H392JF	P.CAPACITOR 50V 3900P	1	
C723		ECUM1H272KBN	C.CAPACITOR CH 50V 2700P	1	
C724,25		ECUM1H102KBN	C.CAPACITOR CH 50V 1000P	2	
C726		ECEA1CBZ100	E.CAPACITOR 16V 10U	1	
C727		ECEA1CPZ101	E.CAPACITOR 16V 100U	1	
C728		ECUM1E104ZFN	C.CAPACITOR CH 25V 0.1U	1	
C729,30		ECUM1H103KBN	C.CAPACITOR CH 50V 0.01U	2	
C731		ECEA1HPZ4R7	E.CAPACITOR 50V 4.7U	1	
C732		ECQM1H223JF	P.CAPACITOR 50V 0.022U	1	
C733		ECUM1H122KBN	C.CAPACITOR CH 50V 1200P	1	
C801		ECEA1CBZ470	E.CAPACITOR 16V 47U	1	
C802		ECUM1H182KBN	C.CAPACITOR CH 50V 1800P	1	
C803		ECUM1H821JCN	C.CAPACITOR CH 50V 820P	1	
C804,05		ECUM1H222KBN	C.CAPACITOR CH 50V 2200P	2	
C812		ECEA1HPZ4R7	E.CAPACITOR 50V 4.7U	1	
C813		ECEA1HPZ3R3	E.CAPACITOR 50V 3.3U	1	
C814		ECQM1H682JF	P.CAPACITOR 50V 6800P	1	
C815		ECQM1H102JF	P.CAPACITOR 50V 1000P	1	
C816		ECQM1H223JF	P.CAPACITOR 50V 0.022U	1	
C817		ECEA1CPZ100	E.CAPACITOR 16V 10U	1	
C819		ECEA1HPZ4R7	E.CAPACITOR 50V 4.7U	1	
C820		ECEA1CPZ470	E.CAPACITOR 16V 47U	1	
C821		ECQM1H103JF	P.CAPACITOR 50V 0.01U	1	
C822		ECQM1H392JF	P.CAPACITOR 50V 3900P	1	
C823		ECUM1H272KBN	C.CAPACITOR CH 50V 2700P	1	

Ref.No.		Part No.	Part Name & Description	Pcs	Remarks
C824,25		ECUM1H102KBN	C.CAPACITOR CH 50V 1000P	2	
C826		ECEA1CBZ100	E.CAPACITOR 16V 10U	1	
C827		ECEA1CPZ101	E.CAPACITOR 16V 100U	1	
C828		ECUM1E104ZFN	C.CAPACITOR CH 25V 0.1U	1	
C829,30		ECUM1H103KBN	C.CAPACITOR CH 50V 0.01U	2	
C831		ECEA1HPZ4R7	E.CAPACITOR 50V 4.7U	1	
C832		ECQM1H223JF	P.CAPACITOR 50V 0.022U	1	
C833		ECUM1H122KBN	C.CAPACITOR CH 50V 1200P	1	
C902		ECEA1AU470	E.CAPACITOR 10V 47U	1	
C903		ECUM1E104ZFN	C.CAPACITOR CH 25V 0.1U	1	
C904		ECEA1CPZ101	E.CAPACITOR 16V 100U	1	
C905		ECUM1E104ZFN	C.CAPACITOR CH 25V 0.1U	1	
C906,07		ECEA1CPZ101	E.CAPACITOR 16V 100U	2	
C908		ECUM1E104ZFN	C.CAPACITOR CH 25V 0.1U	1	
C909		ECEA1CPZ101	E.CAPACITOR 16V 100U	1	
C910-12		ECUM1H101JCN	C.CAPACITOR CH 50V 100P	3	
C913-15		ECUM1H151JCN	C.CAPACITOR CH 50V 150P	3	
C916		ECUM1H103KBN	C.CAPACITOR CH 50V 0.01U	1	
C917		ECEA1CPZ100	E.CAPACITOR 16V 10U	1	
C918		ECUM1E104ZFN	C.CAPACITOR CH 25V 0.1U	1	
C920		ECUM1H151JCN	C.CAPACITOR CH 50V 150P	1	
C921,22		ECUM1H103KBN	C.CAPACITOR CH 50V 0.01U	2	
C923		ECUM1H331JCN	C.CAPACITOR CH 50V 330P	1	
C924		ECEA1HPZ010	E.CAPACITOR 50V 1U	1	
C925		ECQM1H223JF	P.CAPACITOR 50V 0.022U	1	
C926		ECUM1H103KBN	C.CAPACITOR CH 50V 0.01U	1	
C929		ECUM1H151JCN	C.CAPACITOR CH 50V 150P	1	
C930,31		ECUM1H103KBN	C.CAPACITOR CH 50V 0.01U	2	
C932		ECUM1H271JCN	C.CAPACITOR CH 50V 270P	1	
C933		ECUM1H391JCN	C.CAPACITOR CH 50V 390P	1	
C934,35		ECUM1H103KBN	C.CAPACITOR CH 50V 0.01U	2	
C936		ECEA1CU100	E.CAPACITOR 16V 10U	1	
C937		ECUM1E104ZFN	C.CAPACITOR CH 25V 0.1U	1	
C938-40		ECEA1CPZ101	E.CAPACITOR 16V 100U	3	
C941		ECEA1HPZ3R3	E.CAPACITOR 50V 3.3U	1	
C942		ECEA1CPZ470	E.CAPACITOR 16V 47U	1	
C944		ECUM1H103KBN	C.CAPACITOR CH 50V 0.01U	1	
C945,46		ECEA1CPZ101	E.CAPACITOR 16V 100U	2	
C947,48		ECEA1HPZ010	E.CAPACITOR 50V 1U	2	
C949		ECUM1E104ZFN	C.CAPACITOR CH 25V 0.1U	1	
C950		ECEA1CPZ101	E.CAPACITOR 16V 100U	1	
D1		MA153	DIODE	1	
D2		MA151K	DIODE	1	
D3,D4		MA3024	DIODE	2	
D101		MA151K	DIODE	1	
D301		MA151K	DIODE	1	
D501		MA153	DIODE	1	
D502		MA151WA	DIODE	1	
D552-57		MA153	DIODE	6	
D558-60		MA3100	DIODE	3	
D561-64		MA153	DIODE	4	
D565,66		MA151K	DIODE	2	
D568-71		MA165	DIODE	4	
D901		MA151WK	DIODE	1	
D902-04		MA151K	DIODE	3	
D905		MA153	DIODE	1	
FL1		VLQ0142	COIL	1	
FL101		EIR7QH007Q	FILTER	1	
FL102		VLF0829	FILTER	1	
FL103		ELM7Q306A	COIL	1	
FL201		VLQ0190	COIL 4.7MH	1	
FL202		VLQ0402	COIL	1	
FL301		EIR7QH007Q	FILTER	1	
FL302		VLF0829	FILTER	1	
FL303		ELM7Q306A	COIL	1	
FL401		VLQ0190	COIL 4.7MH	1	
FL402		VLQ0402	COIL	1	
FL701		VLF0427	FILTER	1	
FL801		VLF0427	FILTER	1	

Refer to the P.C.BOARDS LIST, page 6-1-1, before using this page.

Ref.No.		Part No.	Part Name & Description	Pcs	Remarks
FL901		ELB4L053	FILTER	1	
FL902		ELB4M043	FILTER	1	
IC1-C3		UPD4053BG	IC	3	
IC4		NJM4558M	IC	1	
IC5,C6		RC082BM	IC	2	
IC101		AN6558S	IC	1	
IC102		RC4556MB	IC	1	
IC103		UPD4053BG	IC	1	
IC104		NJM4558M	IC	1	
IC105		TEA0666T	IC	1	
IC106		AN78N09	IC	1	
IC107		AN79N09	IC	1	
IC108		NJM4558M	IC	1	
IC201-03		NJM4558M	IC	3	
IC273		TEA0666T	IC	1	
IC301		AN6558S	IC	1	
IC302		RC4556MB	IC	1	
IC303		UPD4053BG	IC	1	
IC304		NJM4558M	IC	1	
IC305		TEA0666T	IC	1	
IC306		AN78N09	IC	1	
IC307		AN79N09	IC	1	
IC308		NJM4558M	IC	1	
IC401-03		NJM4558M	IC	3	
IC473		TEA0666T	IC	1	
IC552		MB620412PF	IC	1	
IC553		AN78L20	IC	1	
IC554-56		LM2904M	IC	3	
IC701		NJM4558M	IC	1	
IC703		NJM4558M	IC	1	
IC801		NJM4558M	IC	1	
IC802		UPD4053BG	IC	1	
IC803,04		NJM4558M	IC	2	
IC805		BA7700K1	IC	1	
IC901		AN78L12	IC	1	
IC902		AN78L05	IC	1	
IC903		AN79L09	IC	1	
IC904		AN78L09	IC	1	
L1		EIR7QG010B	IF TRANSFORMER	1	
L101,02		VLQEL05F101K	COIL 100UH	2	
L301,02		VLQEL05F101K	COIL 100UH	2	
L551		VLQEL05S2R2K	COIL 2.2UH	1	
L552		VLQEL05S471K	COIL 470UH	1	
L553,54		VLQEL05S470J	COIL 47UH	2	
L901		VLQEL05S470J	COIL 47UH	1	
L902		VLQEL05S221J	COIL 220UH	1	
L903		VLQEL05F101K	COIL 100UH	1	
L904		VLQEL05S820J	COIL 82UH	1	
L905		VLQEL05S331J	COIL 330UH	1	
L906,07		VLQEL05F101K	COIL 100UH	2	
L909		VLQEL05S271J	COIL 270UH	1	
L910-13		VLQEL05F101K	COIL 100UH	4	
P101		VJP1232R	CONNECTOR(MALE) 5P	1	
P301		VJP1232G	CONNECTOR (MALE)	1	
P551		VJP1239T	CONNECTOR(MALE) 12P	1	
P553		VJP1230T	CONNECTOR(MALE) 3P	1	
Q1		2SD602	TRANSISTOR	1	(Q,R)
Q2		UN2113	TRANSISTOR-RESISTOR	1	
Q3		2SA1018	TRANSISTOR	1	(R)
Q4,Q5		2SC3478A	TRANSISTOR	2	
Q6		2SD602	TRANSISTOR	1	(Q,R)
Q7		2SD1328	TRANSISTOR CHIP	1	(Q,R)
Q11		UN2211	TRANSISTOR-RESISTOR	1	

Ref.No.		Part No.	Part Name & Description	Pcs	Remarks
Q12		2SB710	TRANSISTOR	1	
Q14		UN2210	TRANSISTOR-RESISTOR	1	
Q101		UN2113	TRANSISTOR-RESISTOR	1	
Q102		UN2213	TRANSISTOR-RESISTOR	1	
Q103-05		2SD601	TRANSISTOR CHIP	3	(Q,R)
Q106		UN2213	TRANSISTOR-RESISTOR	1	
Q107		2SD1328	TRANSISTOR CHIP	1	(Q,R)
Q108		UN2113	TRANSISTOR-RESISTOR	1	
Q109,10		2SD601	TRANSISTOR CHIP	2	(Q,R)
Q111,12		2SD1011	TRANSISTOR	2	
Q113		2SA1018	TRANSISTOR	1	(R)
Q114		2SK146	TRANSISTOR	1	(B,L)
Q115		2SD601	TRANSISTOR CHIP	1	(Q,R)
Q116		2SB709	TRANSISTOR CHIP	1	(Q,R)
Q117		2SD601	TRANSISTOR CHIP	1	(Q,R)
Q118-20		UN2213	TRANSISTOR-RESISTOR	3	
Q122		UN2213	TRANSISTOR-RESISTOR	1	
Q201		2SD601	TRANSISTOR CHIP	1	(Q,R)
Q202		2SB709	TRANSISTOR CHIP	1	(Q,R)
Q203		2SD601	TRANSISTOR CHIP	1	(Q,R)
Q204		2SB709	TRANSISTOR CHIP	1	(Q,R)
Q205		2SD1328	TRANSISTOR CHIP	1	(Q,R)
Q301		UN2113	TRANSISTOR-RESISTOR	1	
Q302		UN2213	TRANSISTOR-RESISTOR	1	
Q303-05		2SD601	TRANSISTOR CHIP	3	(Q,R)
Q306		UN2213	TRANSISTOR-RESISTOR	1	
Q307		2SD1328	TRANSISTOR CHIP	1	(Q,R)
Q308		UN2113	TRANSISTOR-RESISTOR	1	
Q309,10		2SD601	TRANSISTOR CHIP	2	(Q,R)
Q311,12		2SD1011	TRANSISTOR	2	
Q313		2SA1018	TRANSISTOR	1	(R)
Q314		2SK146	TRANSISTOR	1	(B,L)
Q315		2SD601	TRANSISTOR CHIP	1	(Q,R)
Q316		2SB709	TRANSISTOR CHIP	1	(Q,R)
Q317		2SD601	TRANSISTOR CHIP	1	(Q,R)
Q318-20		UN2213	TRANSISTOR-RESISTOR	3	
Q322		UN2213	TRANSISTOR-RESISTOR	1	
Q401		2SD601	TRANSISTOR CHIP	1	(Q,R)
Q402		2SB709	TRANSISTOR CHIP	1	(Q,R)
Q403		2SD601	TRANSISTOR CHIP	1	(Q,R)
Q404		2SB709	TRANSISTOR CHIP	1	(Q,R)
Q405		2SD1328	TRANSISTOR CHIP	1	(Q,R)
Q501		2SB709	TRANSISTOR CHIP	1	(Q,R)
Q502		UN2113	TRANSISTOR-RESISTOR	1	
Q551-62		UN2213	TRANSISTOR-RESISTOR	12	
Q563,64		UN2113	TRANSISTOR-RESISTOR	2	
Q565-68		2SC2295	TRANSISTOR CHIP	4	(B,C)
Q571		2SC2497	TRANSISTOR	1	
Q572		2SB710	TRANSISTOR	1	
Q573,74		2SD1994A	TRANSISTOR	2	(Q,R)
Q575		2SC2497	TRANSISTOR	1	
Q576		2SB710	TRANSISTOR	1	
Q577,78		2SD1994A	TRANSISTOR	2	(Q,R)
Q579		2SD1992A	TRANSISTOR	1	
Q580		2SB710	TRANSISTOR	1	
Q581,82		2SD1994A	TRANSISTOR	2	(Q,R)
Q583		2SB710	TRANSISTOR	1	
Q584,85		2SD1328	TRANSISTOR CHIP	2	(Q,R)
Q587		2SB710	TRANSISTOR	1	
Q588,89		2SD1994A	TRANSISTOR	2	(Q,R)
Q590		2SB710	TRANSISTOR	1	
Q591,92		2SD1328	TRANSISTOR CHIP	2	(Q,R)
Q593		2SC2497	TRANSISTOR	1	
Q594		2SB710	TRANSISTOR	1	
Q595,96		2SD1994A	TRANSISTOR	2	(Q,R)
Q597		2SD1992A	TRANSISTOR	1	
Q598		2SB710	TRANSISTOR	1	
Q599,00		2SD1994A	TRANSISTOR	2	(Q,R)
Q601		2SB710	TRANSISTOR	1	
Q602,03		2SD1328	TRANSISTOR CHIP	2	(Q,R)
Q604		UN2213	TRANSISTOR-RESISTOR	1	
Q605		2SB710	TRANSISTOR	1	
Q606		2SD1992A	TRANSISTOR	1	
Q607		2SB710	TRANSISTOR	1	
Q608,09		2SD1994A	TRANSISTOR	2	(Q,R)

Refer to the P.C.BOARDS LIST, page 6-1-1, before using this page.

Ref.No.		Part No.	Part Name & Description	Pcs	Remarks
Q610		2SB710	TRANSISTOR	1	
Q611,12		2SD1328	TRANSISTOR CHIP	2	(Q,R)
Q613		UN2213	TRANSISTOR-RESISTOR	1	
Q614		2SB710	TRANSISTOR	1	
Q615		2SD1992A	TRANSISTOR	1	
Q616		2SB710	TRANSISTOR	1	
Q617,18		2SD1994A	TRANSISTOR	2	(Q,R)
Q619-21		UN2213	TRANSISTOR-RESISTOR	3	
Q701		2SD1328	TRANSISTOR CHIP	1	(Q,R)
Q702		2SD601	TRANSISTOR CHIP	1	(Q,R)
Q801		2SD1328	TRANSISTOR CHIP	1	(Q,R)
Q802		2SD601	TRANSISTOR CHIP	1	(Q,R)
Q901		UN2113	TRANSISTOR-RESISTOR	1	
Q902-04		UN2213	TRANSISTOR-RESISTOR	3	
Q909		2SC2404	TRANSISTOR CHIP	1	(B,C)
Q910,11		2SD601	TRANSISTOR CHIP	2	(Q,R)
Q912		2SC2404	TRANSISTOR CHIP	1	(B,C)
Q913,14		2SD601	TRANSISTOR CHIP	2	(Q,R)
Q915		2SC2404	TRANSISTOR CHIP	1	(B,C)
Q916,17		2SD601	TRANSISTOR CHIP	2	(Q,R)
Q920		UN2113	TRANSISTOR-RESISTOR	1	
			RESISTORS		
R1		ERJ6GEYJ102	M.RESISTOR CH 1/10W 1K	1	
R2		ERJ6GEYJ223	M.RESISTOR CH 1/10W 22K	1	
R3,R4		ERJ6GEYJ473	M.RESISTOR CH 1/10W 47K	2	
R5		ERJ6GEYJ472	M.RESISTOR CH 1/10W 4.7K	1	
R6,R7		ERJ6GEYJ103	M.RESISTOR CH 1/10W 10K	2	
R8		ERJ6GEYJ104	M.RESISTOR CH 1/10W 100K	1	
R9		ERJ6GEYJ472	M.RESISTOR CH 1/10W 4.7K	1	
R10		ERJ6GEYJ471	M.RESISTOR CH 1/10W 470	1	
R11		ERJ6GEYJ103	M.RESISTOR CH 1/10W 10K	1	
R12		ERJ6GEYJ100	M.RESISTOR CH 1/10W 10	1	
R13		ERJ6GEYJ473	M.RESISTOR CH 1/10W 47K	1	
R14		ERJ6GEYJ102	M.RESISTOR CH 1/10W 1K	1	
R15		ERJ6GEY0R00	M.RESISTOR CH 1/10W 0	1	
R16		ERJ6GEYJ224	M.RESISTOR CH 1/10W 220K	1	
R17		ERJ6GEYJ562	M.RESISTOR CH 1/10W 5.6K	1	
R18		ERJ6GEYJ473	M.RESISTOR CH 1/10W 47K	1	
R19		ERJ6GEYJ331	M.RESISTOR CH 1/10W 330	1	
R20		ERJ6GEYJ473	M.RESISTOR CH 1/10W 47K	1	
R21		ERJ6GEYJ123	M.RESISTOR CH1/10W 12K	1	
R22		ERJ6GEYJ104	M.RESISTOR CH 1/10W 100K	1	
R23		ERJ6GEYJ102	M.RESISTOR CH 1/10W 1K	1	
R24		ERJ6GEYJ470	M.RESISTOR CH 1/10W 47	1	
R25		ERJ6GEYJ332	M.RESISTOR CH 1/10W 3.3K	1	
R26		ERJ6GEYJ473	M.RESISTOR CH 1/10W 47K	1	
R27		ERJ6GEYJ472	M.RESISTOR CH 1/10W 4.7K	1	
R29		ERJ6GEYJ470	M.RESISTOR CH 1/10W 47	1	
R30		ERJ6GEYJ102	M.RESISTOR CH 1/10W 1K	1	
R39		ERJ6GEYJ104	M.RESISTOR CH 1/10W 100K	1	
R42,43		ERJ6GEYJ223	M.RESISTOR CH 1/10W 22K	2	
R44		ERJ6GEYJ104	M.RESISTOR CH 1/10W 100K	1	
R49		ERJ6GEYJ103	M.RESISTOR CH 1/10W 10K	1	
R50		ERDS2TJ223	C.RESISTOR 1/4W 22K	1	
R101,02		ERJ6GEYJ103	M.RESISTOR CH 1/10W 10K	2	
R104,05		ERJ6GEYJ223	M.RESISTOR CH 1/10W 22K	2	
R106		ERJ6GEYJ103	M.RESISTOR CH 1/10W 10K	1	
R107		ERJ6GEYJ153	M.RESISTOR CH 1/10W 15K	1	
R108		ERJ6GEYJ681	M.RESISTOR CH 1/10W 680	1	
R109		ERJ6GEYJ470	M.RESISTOR CH 1/10W 47	1	
R110		ERJ6GEYJ102	M.RESISTOR CH 1/10W 1K	1	
R111		ERJ6GEYJ393	M.RESISTOR CH 1/10W 39K	1	
R112		ERJ6GEYJ104	M.RESISTOR CH 1/10W 100K	1	
R113		ERJ6GEYJ102	M.RESISTOR CH 1/10W 1K	1	
R114		ERJ6GEYJ332	M.RESISTOR CH 1/10W 3.3K	1	
R115		ERJ6GEYJ103	M.RESISTOR CH 1/10W 10K	1	
R116		ERJ6GEYJ332	M.RESISTOR CH 1/10W 3.3K	1	
R117		ERJ6GEYJ102	M.RESISTOR CH 1/10W 1K	1	
R118-20		ERJ6GEYJ104	M.RESISTOR CH 1/10W 100K	3	
R121		ERJ6GEYJ102	M.RESISTOR CH 1/10W 1K	1	
R122		ERJ6GEYJ103	M.RESISTOR CH 1/10W 10K	1	
R123		ERJ6GEYJ102	M.RESISTOR CH 1/10W 1K	1	

Ref.No.		Part No.	Part Name & Description	Pcs	Remarks
R124		ERJ6GEYG112	M.RESISTOR CH 1/10W 1.1K	1	
R125		ERJ6GEY0R00	M.RESISTOR CH 1/10W 0	1	
R126		ERJ6GEYJ104	M.RESISTOR CH 1/10W 100K	1	
R127		ERJ6GEYJ102	M.RESISTOR CH 1/10W 1K	1	
R128		ERJ6GEYJ123	M.RESISTOR CH1/10W 12K	1	
R129		ERJ6GEYJ104	M.RESISTOR CH 1/10W 100K	1	
R130		ERJ6GEYJ103	M.RESISTOR CH 1/10W 10K	1	
R131		ERJ6GEYJ100	M.RESISTOR CH 1/10W 10	1	
R133,34		ERJ6GEYJ223	M.RESISTOR CH 1/10W 22K	2	
R135		ERJ6GEYJ472	M.RESISTOR CH 1/10W 4.7K	1	
R136		ERJ6GEYJ561	M.RESISTOR CH 1/10W 560	1	
R137		ERJ6GEYJ332	M.RESISTOR CH 1/10W 3.3K	1	
R138,39		VRE0034E272	M.RESISTOR CH 1/10W 2.7K	2	
R140		ERJ6GEYJ103	M.RESISTOR CH 1/10W 10K	1	
R141		VRE0034E473	M.RESISTOR CH 1/10W 47K	1	
R142		VRE0034E272	M.RESISTOR CH 1/10W 2.7K	1	
R143		VRE0034E470	M.RESISTOR CH 1/10W 47	1	
R144		VRE0034E104	M.RESISTOR CH 1/10W 100K	1	
R145		ERJ6GEYJ102	M.RESISTOR CH 1/10W 1K	1	
R146		ERJ6GEYJ333	M.RESISTOR CH 1/10W 33K	1	
R147		ERJ6GEYJ103	M.RESISTOR CH 1/10W 10K	1	
R148,49		ERJ6GEYJ102	M.RESISTOR CH 1/10W 1K	2	
R150		ERJ6GEYJ223	M.RESISTOR CH 1/10W 22K	1	
R151		ERJ6GEYJ102	M.RESISTOR CH 1/10W 1K	1	
R152		ERJ6GEYJ103	M.RESISTOR CH 1/10W 10K	1	
R153		ERJ6GEYJ221	M.RESISTOR CH 1/10W 220	1	
R154		ERJ6GEYJ101	M.RESISTOR CH 1/10W 100	1	
R155		ERJ6GEYJ272	M.RESISTOR CH 1/10W 2.7K	1	
R156		ERJ6GEYJ332	M.RESISTOR CH 1/10W 3.3K	1	
R157		VRE0034E102	M.RESISTOR CH 1/10W 1K	1	
R158		VRE0034E332	M.RESISTOR CH 1/10W 3.3K	1	
R159		ERJ6GEYJ221	M.RESISTOR CH 1/10W 220	1	
R160		VRE0034E823	M.RESISTOR CH 1/10W 82K	1	
R161		VRE0034E333	M.RESISTOR CH 1/10W 33K	1	
R162		VRE0034E823	M.RESISTOR CH 1/10W 82K	1	
R163		ERJ6GEYJ104	M.RESISTOR CH 1/10W 100K	1	
R164		VRE0034E683	M.RESISTOR CH 1/10W 68K	1	
R165		VRE0034E222	M.RESISTOR CH 1/10W 2.2K	1	
R166		VRE0034E512	M.RESISTOR CH 1/10W 5.1K	1	
R167		VRE0034E822	M.RESISTOR CH 1/10W 8.2K	1	
R168		VRE0034E203	M.RESISTOR CH 1/10W 20K	1	
R169		VRE0034E821	M.RESISTOR CH 1/10W 820	1	
R201		ERJ6GEYJ104	M.RESISTOR CH 1/10W 100K	1	
R202		ERJ6GEYJ103	M.RESISTOR CH 1/10W 10K	1	
R204		ERJ6GEYJ103	M.RESISTOR CH 1/10W 10K	1	
R205		ERJ6GEYJ332	M.RESISTOR CH 1/10W 3.3K	1	
R206		ERJ6GEYJ183	M.RESISTOR CH 1/10W 18K	1	
R207		ERJ6GEYJ132	M.RESISTOR CH1/10W 1.3K	1	
R208		ERJ6GEYJ183	M.RESISTOR CH 1/10W 18K	1	
R209		ERJ6GEYJ223	M.RESISTOR CH 1/10W 22K	1	
R210-12		ERJ6GEYJ104	M.RESISTOR CH 1/10W 100K	3	
R213		ERJ6GEYJ223	M.RESISTOR CH 1/10W 22K	1	
R214		ERJ6GEYJ152	M.RESISTOR CH 1/10W 1.5K	1	
R215		ERJ6GEYJ332	M.RESISTOR CH 1/10W 3.3K	1	
R216		ERJ6GEYJ102	M.RESISTOR CH 1/10W 1K	1	
R217		ERJ6GEYJ104	M.RESISTOR CH 1/10W 100K	1	
R218		ERJ6GEYJ103	M.RESISTOR CH 1/10W 10K	1	
R219		ERJ6GEYJ472	M.RESISTOR CH 1/10W 4.7K	1	
R220		ERJ6GEYJ682	M.RESISTOR CH 1/10W 6.8K	1	
R221		ERJ6GEYJ471	M.RESISTOR CH 1/10W 470	1	
R222		ERJ6GEYJ102	M.RESISTOR CH 1/10W 1K	1	
R223		ERJ6GEYJ392	M.RESISTOR CH 1/10W 3.9K	1	
R224,25		ERJ6GEYJ103	M.RESISTOR CH 1/10W 10K	2	
R226		ERJ6GEYJ102	M.RESISTOR CH 1/10W 1K	1	
R227		ERJ6GEYJ183	M.RESISTOR CH 1/10W 18K	1	
R228		ERJ6GEYJ272	M.RESISTOR CH 1/10W 2.7K	1	
R229		ERJ6GEYJ103	M.RESISTOR CH 1/10W 10K	1	
R230		ERJ6GEYJ102	M.RESISTOR CH 1/10W 1K	1	
R231		ERJ6GEYJ103	M.RESISTOR CH 1/10W 10K	1	
R232		ERJ6GEYJ272	M.RESISTOR CH 1/10W 2.7K	1	
R233		ERJ6GEYJ561	M.RESISTOR CH 1/10W 560	1	
R235		ERJ6GEYJ103	M.RESISTOR CH 1/10W 10K	1	
R236		ERJ6GEYJ331	M.RESISTOR CH 1/10W 330	1	
R301,02		ERJ6GEYJ103	M.RESISTOR CH 1/10W 10K	2	
R304		ERJ6GEYJ223	M.RESISTOR CH 1/10W 22K	1	

Refer to the P.C.BOARDS LIST, page 6-1-1, before using this page.

Ref.No.		Part No.	Part Name & Description	Pcs	Remarks
R306		ERJ6GEYJ103	M.RESISTOR CH 1/10W 10K	1	
R307		ERJ6GEYJ153	M.RESISTOR CH 1/10W 15K	1	
R308		ERJ6GEYJ681	M.RESISTOR CH 1/10W 680	1	
R309		ERJ6GEYJ470	M.RESISTOR CH 1/10W 47	1	
R310		ERJ6GEYJ102	M.RESISTOR CH 1/10W 1K	1	
R311		ERJ6GEYJ393	M.RESISTOR CH 1/10W 39K	1	
R312		ERJ6GEYJ104	M.RESISTOR CH 1/10W 100K	1	
R313		ERJ6GEYJ102	M.RESISTOR CH 1/10W 1K	1	
R314		ERJ6GEYJ332	M.RESISTOR CH 1/10W 3.3K	1	
R315		ERJ6GEYJ103	M.RESISTOR CH 1/10W 10K	1	
R316		ERJ6GEYJ332	M.RESISTOR CH 1/10W 3.3K	1	
R317		ERJ6GEYJ102	M.RESISTOR CH 1/10W 1K	1	
R318-20		ERJ6GEYJ104	M.RESISTOR CH 1/10W 100K	3	
R321		ERJ6GEYJ102	M.RESISTOR CH 1/10W 1K	1	
R322		ERJ6GEYJ103	M.RESISTOR CH 1/10W 10K	1	
R323		ERJ6GEYJ102	M.RESISTOR CH 1/10W 1K	1	
R324		ERJ6GEYG112	M.RESISTOR CH 1/10W 1.1K	1	
R325		ERJ6GEY0R00	M.RESISTOR CH 1/10W 0	1	
R326		ERJ6GEYJ104	M.RESISTOR CH 1/10W 100K	1	
R327		ERJ6GEYJ102	M.RESISTOR CH 1/10W 1K	1	
R328		ERJ6GEYJ123	M.RESISTOR CH1/10W 12K	1	
R329		ERJ6GEYJ104	M.RESISTOR CH 1/10W 100K	1	
R330		ERJ6GEYJ103	M.RESISTOR CH 1/10W 10K	1	
R331		ERJ6GEYJ100	M.RESISTOR CH 1/10W 10	1	
R333,34		ERJ6GEYJ223	M.RESISTOR CH 1/10W 22K	2	
R335		ERJ6GEYJ472	M.RESISTOR CH 1/10W 4.7K	1	
R336		ERJ6GEYJ561	M.RESISTOR CH 1/10W 560	1	
R337		ERJ6GEYJ332	M.RESISTOR CH 1/10W 3.3K	1	
R338,39		VRE0034E272	M.RESISTOR CH 1/10W 2.7K	2	
R340		ERJ6GEYJ103	M.RESISTOR CH 1/10W 10K	1	
R341		VRE0034E473	M.RESISTOR CH 1/10W 47K	1	
R342		VRE0034E272	M.RESISTOR CH 1/10W 2.7K	1	
R343		VRE0034E470	M.RESISTOR CH 1/10W 47	1	
R344		VRE0034E104	M.RESISTOR CH 1/10W 100K	1	
R345		ERJ6GEYJ102	M.RESISTOR CH 1/10W 1K	1	
R346		ERJ6GEYJ333	M.RESISTOR CH 1/10W 33K	1	
R347		ERJ6GEYJ103	M.RESISTOR CH 1/10W 10K	1	
R348,49		ERJ6GEYJ102	M.RESISTOR CH 1/10W 1K	2	
R350		ERJ6GEYJ223	M.RESISTOR CH 1/10W 22K	1	
R351		ERJ6GEYJ102	M.RESISTOR CH 1/10W 1K	1	
R352		ERJ6GEYJ103	M.RESISTOR CH 1/10W 10K	1	
R353		ERJ6GEYJ221	M.RESISTOR CH 1/10W 220	1	
R354		ERJ6GEYJ101	M.RESISTOR CH 1/10W 100	1	
R355		ERJ6GEYJ272	M.RESISTOR CH 1/10W 2.7K	1	
R356		ERJ6GEYJ332	M.RESISTOR CH 1/10W 3.3K	1	
R357		VRE0034E102	M.RESISTOR CH 1/10W 1K	1	
R358		VRE0034E332	M.RESISTOR CH 1/10W 3.3K	1	
R359		ERJ6GEYJ221	M.RESISTOR CH 1/10W 220	1	
R360		VRE0034E823	M.RESISTOR CH 1/10W 82K	1	
R361		VRE0034E333	M.RESISTOR CH 1/10W 33K	1	
R362		VRE0034E823	M.RESISTOR CH 1/10W 82K	1	
R363		ERJ6GEYJ104	M.RESISTOR CH 1/10W 100K	1	
R364		VRE0034E683	M.RESISTOR CH 1/10W 68K	1	
R365		VRE0034E222	M.RESISTOR CH 1/10W 2.2K	1	
R366		VRE0034E512	M.RESISTOR CH 1/10W 5.1K	1	
R367		VRE0034E822	M.RESISTOR CH 1/10W 8.2K	1	
R368		VRE0034E203	M.RESISTOR CH 1/10W 20K	1	
R369		VRE0034E821	M.RESISTOR CH 1/10W 820	1	
R401		ERJ6GEYJ104	M.RESISTOR CH 1/10W 100K	1	
R402-04		ERJ6GEYJ103	M.RESISTOR CH 1/10W 10K	3	
R405		ERJ6GEYJ332	M.RESISTOR CH 1/10W 3.3K	1	
R406		ERJ6GEYJ183	M.RESISTOR CH 1/10W 18K	1	
R407		ERJ6GEYJ132	M.RESISTOR CH1/10W 1.3K	1	
R408		ERJ6GEYJ183	M.RESISTOR CH 1/10W 18K	1	
R409		ERJ6GEYJ223	M.RESISTOR CH 1/10W 22K	1	
R410-12		ERJ6GEYJ104	M.RESISTOR CH 1/10W 100K	3	
R413		ERJ6GEYJ223	M.RESISTOR CH 1/10W 22K	1	
R414		ERJ6GEYJ152	M.RESISTOR CH 1/10W 1.5K	1	
R415		ERJ6GEYJ332	M.RESISTOR CH 1/10W 3.3K	1	
R416		ERJ6GEYJ102	M.RESISTOR CH 1/10W 1K	1	
R417		ERJ6GEYJ104	M.RESISTOR CH 1/10W 100K	1	
R418		ERJ6GEYJ103	M.RESISTOR CH 1/10W 10K	1	
R419		ERJ6GEYJ472	M.RESISTOR CH 1/10W 4.7K	1	
R420		ERJ6GEYJ682	M.RESISTOR CH 1/10W 6.8K	1	
R421		ERJ6GEYJ471	M.RESISTOR CH 1/10W 470	1	
R422		ERJ6GEYJ102	M.RESISTOR CH 1/10W 1K	1	
R423		ERJ6GEYJ392	M.RESISTOR CH 1/10W 3.9K	1	
R424,25		ERJ6GEYJ103	M.RESISTOR CH 1/10W 10K	2	
R426		ERJ6GEYJ102	M.RESISTOR CH 1/10W 1K	1	
R427		ERJ6GEYJ183	M.RESISTOR CH 1/10W 18K	1	
R428		ERJ6GEYJ272	M.RESISTOR CH 1/10W 2.7K	1	
R429		ERJ6GEYJ103	M.RESISTOR CH 1/10W 10K	1	
R430		ERJ6GEYJ102	M.RESISTOR CH 1/10W 1K	1	
R431		ERJ6GEYJ103	M.RESISTOR CH 1/10W 10K	1	
R432		ERJ6GEYJ272	M.RESISTOR CH 1/10W 2.7K	1	
R433		ERJ6GEYJ561	M.RESISTOR CH 1/10W 560	1	
R435		ERJ6GEYJ103	M.RESISTOR CH 1/10W 10K	1	
R436		ERJ6GEYJ331	M.RESISTOR CH 1/10W 330	1	
R501		ERJ6GEYJ103	M.RESISTOR CH 1/10W 10K	1	
R502,03		ERJ6GEYJ223	M.RESISTOR CH 1/10W 22K	2	
R508		ERJ6GEYJ103	M.RESISTOR CH 1/10W 10K	1	
R509		ERJ6GEYJ223	M.RESISTOR CH 1/10W 22K	1	
R551		ERJ6GEYJ223	M.RESISTOR CH 1/10W 22K	1	
R552		ERJ6GEYJ103	M.RESISTOR CH 1/10W 10K	1	
R553		ERJ6GEYJ102	M.RESISTOR CH 1/10W 1K	1	
R554		ERJ6GEYJ330	M.RESISTOR CH1/10W 33	1	
R555		ERJ6GEYJ103	M.RESISTOR CH 1/10W 10K	1	
R556		ERJ6GEYJ473	M.RESISTOR CH 1/10W 47K	1	
R557		ERJ6GEYJ330	M.RESISTOR CH1/10W 33	1	
R558		ERJ6GEYJ103	M.RESISTOR CH 1/10W 10K	1	
R559		ERJ6GEYJ392	M.RESISTOR CH 1/10W 3.9K	1	
R560		ERJ6GEYJ101	M.RESISTOR CH 1/10W 100	1	
R561		ERJ6GEYJ103	M.RESISTOR CH 1/10W 10K	1	
R563		ERJ6GEYJ101	M.RESISTOR CH 1/10W 100	1	
R564		ERJ6GEYJ105	M.RESISTOR CH 1/10W 1M	1	
R567		ERJ6GEY0R00	M.RESISTOR CH 1/10W 0	1	
R569		ERJ6GEY0R00	M.RESISTOR CH 1/10W 0	1	
R570		ERJ6GEYJ472	M.RESISTOR CH 1/10W 4.7K	1	
R571		ERJ6GEYJ333	M.RESISTOR CH 1/10W 33K	1	
R572,73		ERJ6GEYJ220	M.RESISTOR CH1/10W 22	2	
R574		ERDS2TJ8R2	C.RESISTOR 1/4W 8.2	1	
R575		ERJ6GEYJ472	M.RESISTOR CH 1/10W 4.7K	1	
R576		ERJ6GEYJ333	M.RESISTOR CH 1/10W 33K	1	
R577,78		ERJ6GEYJ220	M.RESISTOR CH1/10W 22	2	
R579		ERDS2TJ8R2	C.RESISTOR 1/4W 8.2	1	
R580		ERJ6GEYJ103	M.RESISTOR CH 1/10W 10K	1	
R581		ERJ6GEYJ683	M.RESISTOR CH 1/10W 68K	1	
R582		ERJ6GEYJ103	M.RESISTOR CH 1/10W 10K	1	
R583		ERJ6GEYJ824	M.RESISTOR CH 1/10W 820K	1	
R584,85		ERJ6GEYJ220	M.RESISTOR CH1/10W 22	2	
R586,87		ERJ6GEYJ273	M.RESISTOR CH1/10W 27K	2	
R588		ERDS2TJ100	C.RESISTOR 1/4W 10	1	
R589		ERJ6GEYJ103	M.RESISTOR CH 1/10W 10K	1	
R590,91		ERJ6GEYJ222	M.RESISTOR CH 1/10W 2.2K	2	
R592		ERJ6GEYK1R0	M.RESISTOR CH 1/10W 1	1	
R593		ERJ6GEYJ103	M.RESISTOR CH 1/10W 10K	1	
R594		ERJ6GEYJ683	M.RESISTOR CH 1/10W 68K	1	
R595		ERJ6GEYJ103	M.RESISTOR CH 1/10W 10K	1	
R596		ERJ6GEYJ824	M.RESISTOR CH 1/10W 820K	1	
R597,98		ERJ6GEYJ220	M.RESISTOR CH1/10W 22	2	
R599,00		ERJ6GEYJ273	M.RESISTOR CH1/10W 27K	2	
R601		ERDS2TJ100	C.RESISTOR 1/4W 10	1	
R602		ERJ6GEYJ103	M.RESISTOR CH 1/10W 10K	1	
R603,04		ERJ6GEYJ222	M.RESISTOR CH 1/10W 2.2K	2	
R605		ERJ6GEYK1R0	M.RESISTOR CH 1/10W 1	1	
R606		ERJ6GEYJ472	M.RESISTOR CH 1/10W 4.7K	1	
R607		ERJ6GEYJ333	M.RESISTOR CH 1/10W 33K	1	
R608,09		ERJ6GEYJ220	M.RESISTOR CH1/10W 22	2	
R610,11		ERJ6GEYJ224	M.RESISTOR CH 1/10W 220K	2	
R612		ERDS2TJ470	C.RESISTOR 1/4W 47	1	
R613		ERJ6GEYJ103	M.RESISTOR CH 1/10W 10K	1	
R614		ERJ6GEYJ683	M.RESISTOR CH 1/10W 68K	1	
R615		ERJ6GEYJ103	M.RESISTOR CH 1/10W 10K	1	
R616		ERJ6GEYJ824	M.RESISTOR CH 1/10W 820K	1	
R617,18		ERJ6GEYJ220	M.RESISTOR CH1/10W 22	2	
R619,20		ERJ6GEYJ104	M.RESISTOR CH 1/10W 100K	2	
R621		ERDS2TJ6R8	C.RESISTOR 1/4W 6.8	1	
R622		ERJ6GEYJ103	M.RESISTOR CH 1/10W 10K	1	
R623,24		ERJ6GEYJ222	M.RESISTOR CH 1/10W 2.2K	2	
R625		ERJ6GEYK1R0	M.RESISTOR CH 1/10W 1	1	

Refer to the P.C.BOARDS LIST, page 6-1-1, before using this page.

Ref.No.		Part No.	Part Name & Description	Pcs	Remarks
R626		ERJ6GEYJ184	M.RESISTOR CH1/10W 180K	1	
R627,28		ERJ6GEYJ103	M.RESISTOR CH 1/10W 10K	2	
R629,30		ERJ6GEYJ220	M.RESISTOR CH1/10W 22	2	
R631,32		ERJ6GEYJ104	M.RESISTOR CH 1/10W 100K	2	
R633		ERDS2TJ6R8	C.RESISTOR 1/4W 6.8	1	
R634		ERJ6GEYJ103	M.RESISTOR CH 1/10W 10K	1	
R635,36		ERJ6GEYJ222	M.RESISTOR CH 1/10W 2.2K	2	
R637		ERJ6GEYK1R0	M.RESISTOR CH 1/10W 1	1	
R638		ERJ6GEYJ184	M.RESISTOR CH1/10W 180K	1	
R639,40		ERJ6GEYJ103	M.RESISTOR CH 1/10W 10K	2	
R641,42		ERJ6GEYJ220	M.RESISTOR CH1/10W 22	2	
R643,44		ERJ6GEYJ104	M.RESISTOR CH 1/10W 100K	2	
R645		ERDS2TJ6R8	C.RESISTOR 1/4W 6.8	1	
R646		ERJ6GEYK1R0	M.RESISTOR CH 1/10W 1	1	
R647-50		ERJ6GEYJ823	M.RESISTOR CH 1/10W 82K	4	
R651,52		ERJ6GEYJ103	M.RESISTOR CH 1/10W 10K	2	
R655,56		ERJ6GEY0R00	M.RESISTOR CH 1/10W 0	2	
R657		ERJ6GEYJ102	M.RESISTOR CH 1/10W 1K	1	
R658		ERJ6GEY0R00	M.RESISTOR CH 1/10W 0	1	
R659		ERJ6GEYJ472	M.RESISTOR CH 1/10W 4.7K	1	
R660,61		ERJ6GEYJ223	M.RESISTOR CH 1/10W 22K	2	
R662,63		ERJ6GEY0R00	M.RESISTOR CH 1/10W 0	2	
R664,65		ERJ6GEYJ392	M.RESISTOR CH 1/10W 3.9K	2	
R666		ERJ6GEYJ332	M.RESISTOR CH 1/10W 3.3K	1	
R667		ERJ6GEYJ473	M.RESISTOR CH 1/10W 47K	1	
R670-73		ERDS2TJ102	C.RESISTOR 1/4W 1K	4	
R701		ERJ6GEYJ104	M.RESISTOR CH 1/10W 100K	1	
R702,03		ERJ6GEYJ332	M.RESISTOR CH 1/10W 3.3K	2	
R704		ERJ6GEYJ102	M.RESISTOR CH 1/10W 1K	1	
R705		ERJ6GEYJ272	M.RESISTOR CH 1/10W 2.7K	1	
R706		ERJ6GEYJ102	M.RESISTOR CH 1/10W 1K	1	
R707,08		ERJ6GEYJ104	M.RESISTOR CH 1/10W 100K	2	
R709		ERJ6GEYJ472	M.RESISTOR CH 1/10W 4.7K	1	
R710		ERJ6GEYJ682	M.RESISTOR CH 1/10W 6.8K	1	
R718		ERJ6GEYJ272	M.RESISTOR CH 1/10W 2.7K	1	
R719,20		ERJ6GEYJ332	M.RESISTOR CH 1/10W 3.3K	2	
R728,29		ERJ6GEYJ821	M.RESISTOR CH 1/10W 820	2	
R730		ERJ6GEYJ681	M.RESISTOR CH 1/10W 680	1	
R731		ERJ6GEY0R00	M.RESISTOR CH 1/10W 0	1	
R732		ERJ6GEYG112	M.RESISTOR CH 1/10W 1.1K	1	
R733		ERJ6GEYJ103	M.RESISTOR CH 1/10W 10K	1	
R734		ERJ6GEYJ183	M.RESISTOR CH 1/10W 18K	1	
R735		ERJ6GEYJ562	M.RESISTOR CH 1/10W 5.6K	1	
R736		ERJ6GEYJ104	M.RESISTOR CH 1/10W 100K	1	
R737,38		ERJ6GEYJ122	M.RESISTOR CH1/10W 1.2K	2	
R739		VRE0034E362	M.RESISTOR CH 1/10W 3.6K	1	
R740		ERJ6GEYJ122	M.RESISTOR CH1/10W 1.2K	1	
R741,42		ERJ6GEYJ103	M.RESISTOR CH 1/10W 10K	2	
R743		ERJ6GEYJ473	M.RESISTOR CH 1/10W 47K	1	
R744		ERJ6GEYJ393	M.RESISTOR CH 1/10W 39K	1	
R745		ERJ6GEYJ473	M.RESISTOR CH 1/10W 47K	1	
R801		ERJ6GEYJ104	M.RESISTOR CH 1/10W 100K	1	
R802,03		ERJ6GEYJ332	M.RESISTOR CH 1/10W 3.3K	2	
R804		ERJ6GEYJ102	M.RESISTOR CH 1/10W 1K	1	
R805		ERJ6GEYJ272	M.RESISTOR CH 1/10W 2.7K	1	
R806		ERJ6GEYJ102	M.RESISTOR CH 1/10W 1K	1	
R807,08		ERJ6GEYJ104	M.RESISTOR CH 1/10W 100K	2	
R809		ERJ6GEYJ472	M.RESISTOR CH 1/10W 4.7K	1	
R810		ERJ6GEYJ682	M.RESISTOR CH 1/10W 6.8K	1	
R818		ERJ6GEYJ272	M.RESISTOR CH 1/10W 2.7K	1	
R819,20		ERJ6GEYJ332	M.RESISTOR CH 1/10W 3.3K	2	
R828,29		ERJ6GEYJ821	M.RESISTOR CH 1/10W 820	2	
R830		ERJ6GEYJ681	M.RESISTOR CH 1/10W 680	1	
R831		ERJ6GEY0R00	M.RESISTOR CH 1/10W 0	1	
R832		ERJ6GEYG112	M.RESISTOR CH 1/10W 1.1K	1	
R833		ERJ6GEYJ103	M.RESISTOR CH 1/10W 10K	1	
R834		ERJ6GEYJ183	M.RESISTOR CH 1/10W 18K	1	
R835		ERJ6GEYJ562	M.RESISTOR CH 1/10W 5.6K	1	
R836		ERJ6GEYJ104	M.RESISTOR CH 1/10W 100K	1	
R837,38		ERJ6GEYJ122	M.RESISTOR CH1/10W 1.2K	2	
R839		VRE0034E362	M.RESISTOR CH 1/10W 3.6K	1	
R840		ERJ6GEYJ122	M.RESISTOR CH1/10W 1.2K	1	
R841,42		ERJ6GEYJ103	M.RESISTOR CH 1/10W 10K	2	
R843		ERJ6GEYJ473	M.RESISTOR CH 1/10W 47K	1	
R844		ERJ6GEYJ393	M.RESISTOR CH 1/10W 39K	1	
R845		ERJ6GEYJ273	M.RESISTOR CH1/10W 27K	1	
R901		ERJ6GEYJ223	M.RESISTOR CH 1/10W 22K	1	
R904		ERJ6GEYJ103	M.RESISTOR CH 1/10W 10K	1	
R905		ERJ6GEYJ223	M.RESISTOR CH 1/10W 22K	1	
R906		ERJ6GEYJ102	M.RESISTOR CH 1/10W 1K	1	
R907		ERJ6GEYJ103	M.RESISTOR CH 1/10W 10K	1	
R909		ERJ6GEYJ101	M.RESISTOR CH 1/10W 100	1	
R910		ERJ6GEYJ103	M.RESISTOR CH 1/10W 10K	1	
R914		ERJ6GEYJ104	M.RESISTOR CH 1/10W 100K	1	
R917,18		ERJ6GEYJ561	M.RESISTOR CH 1/10W 560	2	
R919,20		ERJ6GEYJ222	M.RESISTOR CH 1/10W 2.2K	2	
R921		VRE0034E223	M.RESISTOR CH 1/10W 22K	1	
R922,23		ERJ6GEYJ104	M.RESISTOR CH 1/10W 100K	2	
R924		ERJ6GEYJ393	M.RESISTOR CH 1/10W 39K	1	
R925		ERJ6GEYJ123	M.RESISTOR CH1/10W 12K	1	
R926		ERJ6GEYJ334	M.RESISTOR CH 1/10W 330K	1	
R927		ERJ6GEYJ103	M.RESISTOR CH 1/10W 10K	1	
R928		ERJ6GEYJ104	M.RESISTOR CH 1/10W 100K	1	
R929		ERJ6GEYJ562	M.RESISTOR CH 1/10W 5.6K	1	
R930-32		ERJ6GEYJ102	M.RESISTOR CH 1/10W 1K	3	
R933		ERJ6GEYJ392	M.RESISTOR CH 1/10W 3.9K	1	
R934		ERJ6GEYJ823	M.RESISTOR CH 1/10W 82K	1	
R935		ERJ6GEYJ273	M.RESISTOR CH1/10W 27K	1	
R936		ERJ6GEYJ392	M.RESISTOR CH 1/10W 3.9K	1	
R937-39		ERJ6GEYJ102	M.RESISTOR CH 1/10W 1K	3	
R940		ERJ6GEYJ560	M.RESISTOR CH 1/10W 56	1	
R941		ERJ6GEYJ392	M.RESISTOR CH 1/10W 3.9K	1	
R942		ERJ6GEYJ102	M.RESISTOR CH 1/10W 1K	1	
R943		ERJ6GEYJ222	M.RESISTOR CH 1/10W 2.2K	1	
R944		ERJ6GEYJ823	M.RESISTOR CH 1/10W 82K	1	
R945		ERJ6GEYJ273	M.RESISTOR CH1/10W 27K	1	
R946-48		ERJ6GEYJ102	M.RESISTOR CH 1/10W 1K	3	
R949		ERJ6GEYJ390	M.RESISTOR CH 1/10W 39	1	
R950		ERJ6GEYJ392	M.RESISTOR CH 1/10W 3.9K	1	
R951		ERJ6GEYJ102	M.RESISTOR CH 1/10W 1K	1	
R952		ERJ6GEYJ222	M.RESISTOR CH 1/10W 2.2K	1	
R953		ERJ6GEYJ823	M.RESISTOR CH 1/10W 82K	1	
R954		ERJ6GEYJ273	M.RESISTOR CH1/10W 27K	1	
R955,56		ERJ6GEYJ102	M.RESISTOR CH 1/10W 1K	2	
R957		ERJ6GEYJ222	M.RESISTOR CH 1/10W 2.2K	1	
R958		ERJ6GEYJ823	M.RESISTOR CH 1/10W 82K	1	
R959		ERJ6GEYJ273	M.RESISTOR CH1/10W 27K	1	
R960		ERJ6GEYJ101	M.RESISTOR CH 1/10W 100	1	
R961		ERJ6GEYJ103	M.RESISTOR CH 1/10W 10K	1	
R962		ERJ6GEYJ102	M.RESISTOR CH 1/10W 1K	1	
R963		ERJ6GEYJ560	M.RESISTOR CH 1/10W 56	1	
R964		ERJ6GEY0R00	M.RESISTOR CH 1/10W 0	1	
R965		ERJ6GEYJ223	M.RESISTOR CH 1/10W 22K	1	
R966		ERJ6GEYJ103	M.RESISTOR CH 1/10W 10K	1	
SW101		VSS023703	SWITCH	1	
SW201		VSS023703	SWITCH	1	
SW301		VSS023703	SWITCH	1	
SW401		VSS023703	SWITCH	1	
T551,52		VLT0602	TRANSFORMER	2	
T553,54		VLT0603	TRANSFORMER	2	
T555		VLT0304	TRANSFORMER	1	
T556-58		VLT0603	TRANSFORMER	3	
TP1		VJR0582	PACK PIN	1	
TP101,02		VJR0582	PACK PIN	2	
TP104,05		VJR0582	PACK PIN	2	
TP201		VJR0582	PACK PIN	1	
TP301,02		VJR0582	PACK PIN	2	
TP304,05		VJR0582	PACK PIN	2	
TP401		VJR0582	PACK PIN	1	
TP501		VJR0582	PACK PIN	1	
TP551-58		VJR0582	PACK PIN	8	

Refer to the P.C.BOARDS LIST, page 6-1-1, before using this page.

Ref.No.		Part No.	Part Name & Description	Pcs	Remarks
TP601-09		VJR0582	PACK PIN	9	
TP702-04		VJR0582	PACK PIN	3	
TP802-04		VJR0582	PACK PIN	3	
TP901		VJR0582	PACK PIN	1	
TPG101		VJR0582	PACK PIN	1	
TPG301		VJR0582	PACK PIN	1	
TPG551		VJR0582	PACK PIN	1	
TPG901		VJR0582	PACK PIN	1	
VR101		VRV0109B103	V.RESISTOR 10K	1	
VR103		VRV0109B502	V.RESISTOR 5K	1	
VR201		VRV0109B203	V.RESISTOR 20K	1	
VR202		VRV0064B103	V.RESISTOR 10K	1	
VR203		VRV0109B502	V.RESISTOR 5K	1	
VR205		VRV0109B103	V.RESISTOR 10K	1	
VR206		VRV0109B502	V.RESISTOR 5K	1	
VR301		VRV0109B103	V.RESISTOR 10K	1	
VR303		VRV0109B502	V.RESISTOR 5K	1	
VR402		VRV0064B103	V.RESISTOR 10K	1	
VR403		VRV0109B502	V.RESISTOR 5K	1	
VR405		VRV0109B103	V.RESISTOR 10K	1	
VR406		VRV0109B502	V.RESISTOR 5K	1	
VR551,52		VRV0109B103	V.RESISTOR 10K	2	
VR701		VRV0109B203	V.RESISTOR 20K	1	
VR703		VRV0109B203	V.RESISTOR 20K	1	
VR704		VRV0109B303	V.RESISTOR 30K	1	
VR705		VRV0109B203	V.RESISTOR 20K	1	
VR801		VRV0109B203	V.RESISTOR 20K	1	
VR803-05		VRV0109B203	V.RESISTOR 20K	3	
VR901		VRV0109B502	V.RESISTOR 5K	1	
X551		VSX0246	CRYSTAL OSCILLATOR	1	
			MISCELLANEOUS		
		VJR0421	PIN	1	
		VML2143	CARD PULLER	1	
		VML2144	CARD PULLER	1	
		VMS4174	PIN	6	
		VMZ1547	BARRIER	1	
		VSC3056	SHIELD CASE	1	
		VXA3966	P.C.B. SHIELD PLATE	1	
		XNG26E	NUT	4	
		XYNV3+K6FR	SCREW	6	
		XYN26+C12	SCREW	4	

Refer to the P.C.BOARDS LIST, page 6-1-1, before using this page.

Ref.No.		Part No.	Part Name & Description	Pcs	Remarks
	■	VEP84095C	P.C.BOARD W/COMPONENT		FOR AU-63-P
			W6 AUDIO		AU-62-P
			CAPACITORS		
C1,C2		ECEA1CU470	E.CAPACITOR 16V 47U	2	
C3		ECEA0JU101	E.CAPACITOR 6.3V 100U	1	
C5		ECEA1CU100	E.CAPACITOR 16V 10U	1	
C6		ECUM1E473KBN	C.CAPACITOR CH 25V 0.047U	1	
C8		ECUM1E104ZFN	C.CAPACITOR CH 25V 0.1U	1	
C9		ECEA1CU100	E.CAPACITOR 16V 10U	1	
C10		ECEA1CN100S	E.CAPACITOR 16V 10U	1	
C11		ECUM1H122KBN	C.CAPACITOR CH 50V 1200P	1	
C12		ECEA1CU100	E.CAPACITOR 16V 10U	1	
C13,14		ECEA1CU470	E.CAPACITOR 16V 47U	2	
C106		ECUM1H470JCN	P.CAPACITOR 50V 47P	1	
C107		ECUM1E104ZFN	C.CAPACITOR CH 25V 0.1U	1	
C108		ECEA1CPZ101	E.CAPACITOR 16V 100U	1	
C109		ECEA1CBZ470	E.CAPACITOR 16V 47U	1	
C110		ECEA1CPZ101	E.CAPACITOR 16V 100U	1	
C111		ECUM1E104ZFN	C.CAPACITOR CH 25V 0.1U	1	
C112,13		ECEA1CPZ101	E.CAPACITOR 16V 100U	2	
C114		ECEA1CBZ100	E.CAPACITOR 16V 10U	1	
C115		ECUM1H220JCN	C.CAPACITOR CH 50V 22P	1	
C116		ECEA1CBZ100	E.CAPACITOR 16V 10U	1	
C120		ECUM1H470JCN	P.CAPACITOR 50V 47P	1	
C121		ECUM1H820JCN	C.CAPACITOR CH 50V 82P	1	
C122		ECUM1H151JCN	C.CAPACITOR CH 50V 150P	1	
C124		ECUM1H470JCN	P.CAPACITOR 50V 47P	1	
C125		ECEA0JPZ471	E.CAPACITOR 6.3V 470U	1	
C127,28		ECEA1CPZ470	E.CAPACITOR 16V 47U	2	
C129		ECQM1H473JF	P.CAPACITOR 50V 0.047U	1	
C131,32		ECEA1CPZ470	E.CAPACITOR 16V 47U	2	
C133		ECUM1H562KBN	C.CAPACITOR CH 50V 5600P	1	
C134,35		ECEA1CBZ100	E.CAPACITOR 16V 10U	2	
C136		ECQP1H472FZ	P.CAPACITOR 50V 4700P	1	
C137		ECEA1CPZ100	E.CAPACITOR 16V 10U	1	
C138		ECQM1H473JF	P.CAPACITOR 50V 0.047U	1	
C139		ECEA1HPZR22	E.CAPACITOR 50V 0.22U	1	
C140,41		ECEA1HPZR68	E.CAPACITOR 50V 0.98U	2	
C142		ECEA1HPZR22	E.CAPACITOR 50V 0.22U	1	
C143		ECQM1H473JF	P.CAPACITOR 50V 0.047U	1	
C144		ECEA1CPZ100	E.CAPACITOR 16V 10U	1	
C145		ECQP1H472FZ	P.CAPACITOR 50V 4700P	1	
C147		ECQP1H103FZ	P.CAPACITOR 50V 0.01U	1	
C148,49		ECQM1H394JF	P.CAPACITOR 50V 0.39U	2	
C306		ECUM1H470JCN	P.CAPACITOR 50V 47P	1	
C307		ECUM1E104ZFN	C.CAPACITOR CH 25V 0.1U	1	
C308		ECEA1CPZ101	E.CAPACITOR 16V 100U	1	
C309		ECEA1CBZ470	E.CAPACITOR 16V 47U	1	
C310		ECEA1CPZ101	E.CAPACITOR 16V 100U	1	
C311		ECUM1E104ZFN	C.CAPACITOR CH 25V 0.1U	1	
C312,13		ECEA1CPZ101	E.CAPACITOR 16V 100U	2	
C314		ECEA1CBZ100	E.CAPACITOR 16V 10U	1	
C315		ECUM1H220JCN	C.CAPACITOR CH 50V 22P	1	
C316		ECEA1CBZ100	E.CAPACITOR 16V 10U	1	
C320		ECUM1H470JCN	P.CAPACITOR 50V 47P	1	
C321		ECUM1H820JCN	C.CAPACITOR CH 50V 82P	1	
C322		ECUM1H151JCN	C.CAPACITOR CH 50V 150P	1	
C324		ECUM1H470JCN	P.CAPACITOR 50V 47P	1	
C325		ECEA0JPZ471	E.CAPACITOR 6.3V 470U	1	
C327,28		ECEA1CPZ470	E.CAPACITOR 16V 47U	2	
C329		ECQM1H473JF	P.CAPACITOR 50V 0.047U	1	
C331,32		ECEA1CPZ470	E.CAPACITOR 16V 47U	2	
C333		ECUM1H562KBN	C.CAPACITOR CH 50V 5600P	1	
C334,35		ECEA1CBZ100	E.CAPACITOR 16V 10U	2	
C336		ECQP1H472FZ	P.CAPACITOR 50V 4700P	1	
C337		ECEA1CPZ100	E.CAPACITOR 16V 10U	1	
C338		ECQM1H473JF	P.CAPACITOR 50V 0.047U	1	
C339		ECEA1HPZR22	E.CAPACITOR 50V 0.22U	1	
C340,41		ECEA1HPZR68	E.CAPACITOR 50V 0.98U	2	
C342		ECEA1HPZR22	E.CAPACITOR 50V 0.22U	1	
C343		ECQM1H473JF	P.CAPACITOR 50V 0.047U	1	
C344		ECEA1CPZ100	E.CAPACITOR 16V 10U	1	
C345		ECQP1H472FZ	P.CAPACITOR 50V 4700P	1	
C347		ECQP1H103FZ	P.CAPACITOR 50V 0.01U	1	
C348,49		ECQM1H394JF	P.CAPACITOR 50V 0.39U	2	
C501		ECEA1CU101	E.CAPACITOR 16V 100U	1	
C503		ECEA1CU220	E.CAPACITOR 16V 22U	1	
C553		ECEA1AU101	E.CAPACITOR 10V 100U	1	
C701		ECEA1CBZ470	E.CAPACITOR 16V 47U	1	
C702		ECUM1H182KBN	C.CAPACITOR CH 50V 1800P	1	
C703		ECUM1H821JCN	C.CAPACITOR CH 50V 820P	1	
C712		ECEA1HPZ4R7	E.CAPACITOR 50V 4.7U	1	
C713		ECEA1HPZ3R3	E.CAPACITOR 50V 3.3U	1	
C714		ECQM1H682JF	P.CAPACITOR 50V 6800P	1	
C715		ECQM1H102JF	P.CAPACITOR 50V 1000P	1	
C716		ECQM1H223JF	P.CAPACITOR 50V 0.022U	1	
C717		ECEA1CPZ100	E.CAPACITOR 16V 10U	1	
C719		ECEA1HPZ4R7	E.CAPACITOR 50V 4.7U	1	
C720		ECEA1CPZ470	E.CAPACITOR 16V 47U	1	
C721		ECQM1H103JF	P.CAPACITOR 50V 0.01U	1	
C722		ECQM1H392JF	P.CAPACITOR 50V 3900P	1	
C723		ECUM1H272KBN	C.CAPACITOR CH 50V 2700P	1	
C724,25		ECUM1H102KBN	C.CAPACITOR CH 50V 1000P	2	
C726		ECEA1CBZ100	E.CAPACITOR 16V 10U	1	
C727		ECEA1CPZ101	E.CAPACITOR 16V 100U	1	
C728		ECUM1E104ZFN	C.CAPACITOR CH 25V 0.1U	1	
C729,30		ECUM1H103KBN	C.CAPACITOR CH 50V 0.01U	2	
C732		ECQM1H223JF	P.CAPACITOR 50V 0.022U	1	
C733		ECUM1H122KBN	C.CAPACITOR CH 50V 1200P	1	
C801		ECEA1CBZ470	E.CAPACITOR 16V 47U	1	
C802		ECUM1H182KBN	C.CAPACITOR CH 50V 1800P	1	
C803		ECUM1H821JCN	C.CAPACITOR CH 50V 820P	1	
C804,05		ECKF1H222KB	C.CAPACITOR 50V 2200P	2	
C812		ECEA1HPZ4R7	E.CAPACITOR 50V 4.7U	1	
C813		ECEA1HPZ3R3	E.CAPACITOR 50V 3.3U	1	
C814		ECQM1H682JF	P.CAPACITOR 50V 6800P	1	
C815		ECQM1H102JF	P.CAPACITOR 50V 1000P	1	
C816		ECQM1H223JF	P.CAPACITOR 50V 0.022U	1	
C817		ECEA1CPZ100	E.CAPACITOR 16V 10U	1	
C819		ECEA1HPZ4R7	E.CAPACITOR 50V 4.7U	1	
C820		ECEA1CPZ470	E.CAPACITOR 16V 47U	1	
C821		ECQM1H103JF	P.CAPACITOR 50V 0.01U	1	
C822		ECQM1H392JF	P.CAPACITOR 50V 3900P	1	
C823		ECUM1H272KBN	C.CAPACITOR CH 50V 2700P	1	
C824,25		ECUM1H102KBN	C.CAPACITOR CH 50V 1000P	2	
C826		ECEA1CBZ100	E.CAPACITOR 16V 10U	1	
C827		ECEA1CPZ101	E.CAPACITOR 16V 100U	1	
C828		ECUM1E104ZFN	C.CAPACITOR CH 25V 0.1U	1	
C829,30		ECUM1H103KBN	C.CAPACITOR CH 50V 0.01U	2	
C832		ECQM1H223JF	P.CAPACITOR 50V 0.022U	1	
C833		ECUM1H122KBN	C.CAPACITOR CH 50V 1200P	1	
C903		ECUM1E104ZFN	C.CAPACITOR CH 25V 0.1U	1	
C904		ECEA1CPZ101	E.CAPACITOR 16V 100U	1	
C905		ECUM1E104ZFN	C.CAPACITOR CH 25V 0.1U	1	
C906,07		ECEA1CPZ101	E.CAPACITOR 16V 100U	2	
C917		ECEA1CPZ100	E.CAPACITOR 16V 10U	1	
C918		ECUM1E104ZFN	C.CAPACITOR CH 25V 0.1U	1	
C919		ECUM1H103KBN	C.CAPACITOR CH 50V 0.01U	1	
C920		ECUM1H151JCN	C.CAPACITOR CH 50V 150P	1	
C921,22		ECUM1H103KBN	C.CAPACITOR CH 50V 0.01U	2	
C923		ECUM1H331JCN	C.CAPACITOR CH 50V 330P	1	
C924		ECEA1HPZ010	E.CAPACITOR 50V 1U	1	
C925		ECQM1H223JF	P.CAPACITOR 50V 0.022U	1	
C926		ECUM1H103KBN	C.CAPACITOR CH 50V 0.01U	1	
C929		ECUM1H151JCN	C.CAPACITOR CH 50V 150P	1	
C930,31		ECUM1H103KBN	C.CAPACITOR CH 50V 0.01U	2	
C932		ECUM1H271JCN	C.CAPACITOR CH 50V 270P	1	
C933		ECUM1H391JCN	C.CAPACITOR CH 50V 390P	1	
C934,35		ECUM1H103KBN	C.CAPACITOR CH 50V 0.01U	2	
C936		ECEA1CU100	E.CAPACITOR 16V 10U	1	
C937		ECUM1E104ZFN	C.CAPACITOR CH 25V 0.1U	1	
C938-40		ECEA1CPZ101	E.CAPACITOR 16V 100U	3	

Refer to the P.C.BOARDS LIST, page 6-1-1, before using this page.

Ref.No.		Part No.	Part Name & Description	Pcs	Remarks
C941		ECEA1HPZ3R3	E.CAPACITOR 50V 3.3U	1	
C942		ECEA1CPZ470	E.CAPACITOR 16V 47U	1	
C944		ECUM1H103KBN	C.CAPACITOR CH 50V 0.01U	1	
C945,46		ECEA1CPZ101	E.CAPACITOR 16V 100U	2	
C947,48		ECEA1HPZ010	E.CAPACITOR 50V 1U	2	
C949		ECUM1E104ZFN	C.CAPACITOR CH 25V 0.1U	1	
C950		ECEA1CPZ101	E.CAPACITOR 16V 100U	1	
D1		MA153	DIODE	1	
D2		MA151K	DIODE	1	
D3,D4		MA3024	DIODE	2	
D7,D8		MA165	DIODE	2	
D501		MA153	DIODE	1	
D502		MA151WA	DIODE	1	
D903		MA151WK	DIODE	1	
FL101		EIR7QH007Q	FILTER	1	
FL102		VLF0829	FILTER	1	
FL103		ELM7Q306A	COIL	1	
FL301		EIR7QH007Q	FILTER	1	
FL302		VLF0829	FILTER	1	
FL303		ELM7Q306A	COIL	1	
FL901		ELB4L053	FILTER	1	
FL902		ELB4M043	FILTER	1	
IC2,C3		UPD4053BG	IC	2	
IC4		NJM4558M	IC	1	
IC5,C6		RC082BM	IC	2	
IC101		AN6558S	IC	1	
IC104		NJM4558M	IC	1	
IC105		TEA0666T	IC	1	
IC106		AN78N09	IC	1	
IC107		AN79N09	IC	1	
IC108		NJM4558M	IC	1	
IC301		AN6558S	IC	1	
IC304		NJM4558M	IC	1	
IC305		TEA0666T	IC	1	
IC306		AN78N09	IC	1	
IC307		AN79N09	IC	1	
IC308		NJM4558M	IC	1	
IC701		NJM4558M	IC	1	
IC703		NJM4558M	IC	1	
IC801		NJM4558M	IC	1	
IC803		NJM4558M	IC	1	
IC805		BA7700K1	IC	1	
IC901		AN78L12	IC	1	
IC902		AN78L05	IC	1	
IC903		AN79L09	IC	1	
IC904		AN78L09	IC	1	
L101,02		VLQEL05F101K	COIL 100UH	2	
L301,02		VLQEL05F101K	COIL 100UH	2	
L552		VLQEL05S471K	COIL 470UH	1	
L906,07		VLQEL05F101K	COIL 100UH	2	
L909		VLQEL05S271J	COIL 270UH	1	
L910-13		VLQEL05F101K	COIL 100UH	4	
P101		VJP1232R	CONNECTOR(MALE) 5P	1	
P301		VJP1232G	CONNECTOR (MALE)	1	
P553		VJP1230T	CONNECTOR(MALE) 3P	1	
Q1		2SD602	TRANSISTOR	1	(Q,R)
Q11		UN2211	TRANSISTOR-RESISTOR	1	

Ref.No.		Part No.	Part Name & Description	Pcs	Remarks
Q12		2SB710	TRANSISTOR	1	
Q107		2SD1328	TRANSISTOR CHIP	1	(Q,R)
Q108		UN2113	TRANSISTOR-RESISTOR	1	
Q114		2SK146	TRANSISTOR	1	(B,L)
Q115		2SD601	TRANSISTOR CHIP	1	(Q,R)
Q116		2SB709	TRANSISTOR CHIP	1	(Q,R)
Q117		2SD601	TRANSISTOR CHIP	1	(Q,R)
Q118-20		UN2213	TRANSISTOR-RESISTOR	3	
Q307		2SD1328	TRANSISTOR CHIP	1	(Q,R)
Q308		UN2113	TRANSISTOR-RESISTOR	1	
Q314		2SK146	TRANSISTOR	1	(B,L)
Q315		2SD601	TRANSISTOR CHIP	1	(Q,R)
Q316		2SB709	TRANSISTOR CHIP	1	(Q,R)
Q317		2SD601	TRANSISTOR CHIP	1	(Q,R)
Q318-20		UN2213	TRANSISTOR-RESISTOR	3	
Q501		2SB709	TRANSISTOR CHIP	1	(Q,R)
Q502		UN2113	TRANSISTOR-RESISTOR	1	
Q503		UN2213	TRANSISTOR-RESISTOR	1	
Q504		2SD601	TRANSISTOR CHIP	1	(Q,R)
Q701		2SD1328	TRANSISTOR CHIP	1	(Q,R)
Q702		2SD601	TRANSISTOR CHIP	1	(Q,R)
Q801		2SD1328	TRANSISTOR CHIP	1	(Q,R)
Q802		2SD601	TRANSISTOR CHIP	1	(Q,R)
Q911		2SD601	TRANSISTOR CHIP	1	(Q,R)
Q912		2SC2404	TRANSISTOR CHIP	1	(B,C)
Q913,14		2SD601	TRANSISTOR CHIP	2	(Q,R)
Q915		2SC2404	TRANSISTOR CHIP	1	(B,C)
Q916,17		2SD601	TRANSISTOR CHIP	2	(Q,R)
Q919		UN2213	TRANSISTOR-RESISTOR	1	
Q920		UN2113	TRANSISTOR-RESISTOR	1	
			RESISTORS		
R1		ERJ6GEYJ102	M.RESISTOR CH 1/10W 1K	1	
R2		ERJ6GEYJ223	M.RESISTOR CH 1/10W 22K	1	
R12		ERJ6GEYJ100	M.RESISTOR CH 1/10W 10	1	
R13		ERJ6GEYJ473	M.RESISTOR CH 1/10W 47K	1	
R14		ERJ6GEYJ102	M.RESISTOR CH 1/10W 1K	1	
R15		ERJ6GEY0R00	M.RESISTOR CH 1/10W 0	1	
R16		ERJ6GEYJ224	M.RESISTOR CH 1/10W 220K	1	
R17		ERJ6GEYJ562	M.RESISTOR CH 1/10W 5.6K	1	
R18		ERJ6GEYJ473	M.RESISTOR CH 1/10W 47K	1	
R19		ERJ6GEYJ331	M.RESISTOR CH 1/10W 330	1	
R20		ERJ6GEYJ473	M.RESISTOR CH 1/10W 47K	1	
R21		ERJ6GEYJ123	M.RESISTOR CH1/10W 12K	1	
R22		ERJ6GEYJ104	M.RESISTOR CH 1/10W 100K	1	
R23		ERJ6GEYJ102	M.RESISTOR CH 1/10W 1K	1	
R24		ERJ6GEYJ470	M.RESISTOR CH 1/10W 47	1	
R25		ERJ6GEYJ332	M.RESISTOR CH 1/10W 3.3K	1	
R26		ERJ6GEYJ473	M.RESISTOR CH 1/10W 47K	1	
R27		ERJ6GEY0R00	M.RESISTOR CH 1/10W 0	1	
R29		ERJ6GEYJ470	M.RESISTOR CH 1/10W 47	1	
R30		ERJ6GEYJ102	M.RESISTOR CH 1/10W 1K	1	
R39		ERJ6GEYJ104	M.RESISTOR CH 1/10W 100K	1	
R42		ERJ6GEYJ223	M.RESISTOR CH 1/10W 22K	1	
R44		ERDS2TJ104	C.RESISTOR 1/4W 100K	1	
R48		ERDS2TJ104	C.RESISTOR 1/4W 100K	1	
R120		ERJ6GEYJ104	M.RESISTOR CH 1/10W 100K	1	
R121		ERJ6GEYJ102	M.RESISTOR CH 1/10W 1K	1	
R122		ERJ6GEYJ103	M.RESISTOR CH 1/10W 10K	1	
R123		ERJ6GEYJ102	M.RESISTOR CH 1/10W 1K	1	
R124		ERJ6GEYG112	M.RESISTOR CH 1/10W 1.1K	1	
R125		ERJ6GEY0R00	M.RESISTOR CH 1/10W 0	1	
R126		ERJ6GEYJ104	M.RESISTOR CH 1/10W 100K	1	
R127		ERJ6GEYJ102	M.RESISTOR CH 1/10W 1K	1	
R128		ERJ6GEYJ123	M.RESISTOR CH1/10W 12K	1	
R129		ERJ6GEYJ104	M.RESISTOR CH 1/10W 100K	1	
R131		ERJ6GEYJ100	M.RESISTOR CH 1/10W 10	1	
R138,39		VRE0034E272	M.RESISTOR CH 1/10W 2.7K	2	
R140		ERJ6GEYJ103	M.RESISTOR CH 1/10W 10K	1	
R141		VRE0034E473	M.RESISTOR CH 1/10W 47K	1	
R142		VRE0034E272	M.RESISTOR CH 1/10W 2.7K	1	
R143		VRE0034E470	M.RESISTOR CH 1/10W 47	1	
R144		VRE0034E104	M.RESISTOR CH 1/10W 100K	1	

Refer to the P.C.BOARDS LIST, page 6-1-1, before using this page.

Ref.No.		Part No.	Part Name & Description	Pcs	Remarks
R145		ERJ6GEYJ102	M.RESISTOR CH 1/10W 1K	1	
R147		ERJ6GEYJ103	M.RESISTOR CH 1/10W 10K	1	
R148,49		ERJ6GEYJ102	M.RESISTOR CH 1/10W 1K	2	
R150		ERJ6GEYJ223	M.RESISTOR CH 1/10W 22K	1	
R151		ERJ6GEYJ102	M.RESISTOR CH 1/10W 1K	1	
R152		ERJ6GEYJ103	M.RESISTOR CH 1/10W 10K	1	
R153		ERJ6GEYJ221	M.RESISTOR CH 1/10W 220	1	
R154		ERJ6GEYJ101	M.RESISTOR CH 1/10W 100	1	
R155		ERJ6GEYJ272	M.RESISTOR CH 1/10W 2.7K	1	
R156		ERJ6GEYJ332	M.RESISTOR CH 1/10W 3.3K	1	
R157		VRE0034E102	M.RESISTOR CH 1/10W 1K	1	
R158		VRE0034E332	M.RESISTOR CH 1/10W 3.3K	1	
R159		ERJ6GEYJ221	M.RESISTOR CH 1/10W 220	1	
R160		VRE0034E823	M.RESISTOR CH 1/10W 82K	1	
R161		VRE0034E333	M.RESISTOR CH 1/10W 33K	1	
R162		VRE0034E823	M.RESISTOR CH 1/10W 82K	1	
R164		VRE0034E683	M.RESISTOR CH 1/10W 68K	1	
R165		VRE0034E222	M.RESISTOR CH 1/10W 2.2K	1	
R166		VRE0034E512	M.RESISTOR CH 1/10W 5.1K	1	
R167		VRE0034E822	M.RESISTOR CH 1/10W 8.2K	1	
R168		VRE0034E203	M.RESISTOR CH 1/10W 20K	1	
R320		ERJ6GEYJ104	M.RESISTOR CH 1/10W 100K	1	
R321		ERJ6GEYJ102	M.RESISTOR CH 1/10W 1K	1	
R322		ERJ6GEYJ103	M.RESISTOR CH 1/10W 10K	1	
R323		ERJ6GEYJ102	M.RESISTOR CH 1/10W 1K	1	
R324		ERJ6GEYG112	M.RESISTOR CH 1/10W 1.1K	1	
R325		ERJ6GEY0R00	M.RESISTOR CH 1/10W 0	1	
R326		ERJ6GEYJ104	M.RESISTOR CH 1/10W 100K	1	
R327		ERJ6GEYJ102	M.RESISTOR CH 1/10W 1K	1	
R328		ERJ6GEYJ123	M.RESISTOR CH1/10W 12K	1	
R329		ERJ6GEYJ104	M.RESISTOR CH 1/10W 100K	1	
R331		ERJ6GEYJ100	M.RESISTOR CH 1/10W 10	1	
R338,39		VRE0034E272	M.RESISTOR CH 1/10W 2.7K	2	
R340		ERJ6GEYJ103	M.RESISTOR CH 1/10W 10K	1	
R341		VRE0034E473	M.RESISTOR CH 1/10W 47K	1	
R342		VRE0034E272	M.RESISTOR CH 1/10W 2.7K	1	
R343		VRE0034E470	M.RESISTOR CH 1/10W 47	1	
R344		VRE0034E104	M.RESISTOR CH 1/10W 100K	1	
R345		ERJ6GEYJ102	M.RESISTOR CH 1/10W 1K	1	
R347		ERJ6GEYJ103	M.RESISTOR CH 1/10W 10K	1	
R348,49		ERJ6GEYJ102	M.RESISTOR CH 1/10W 1K	2	
R350		ERJ6GEYJ223	M.RESISTOR CH 1/10W 22K	1	
R351		ERJ6GEYJ102	M.RESISTOR CH 1/10W 1K	1	
R352		ERJ6GEYJ103	M.RESISTOR CH 1/10W 10K	1	
R353		ERJ6GEYJ221	M.RESISTOR CH 1/10W 220	1	
R354		ERJ6GEYJ101	M.RESISTOR CH 1/10W 100	1	
R355		ERJ6GEYJ272	M.RESISTOR CH 1/10W 2.7K	1	
R356		ERJ6GEYJ332	M.RESISTOR CH 1/10W 3.3K	1	
R357		VRE0034E102	M.RESISTOR CH 1/10W 1K	1	
R358		VRE0034E332	M.RESISTOR CH 1/10W 3.3K	1	
R359		ERJ6GEYJ221	M.RESISTOR CH 1/10W 220	1	
R360		VRE0034E823	M.RESISTOR CH 1/10W 82K	1	
R361		VRE0034E333	M.RESISTOR CH 1/10W 33K	1	
R362		VRE0034E823	M.RESISTOR CH 1/10W 82K	1	
R364		VRE0034E683	M.RESISTOR CH 1/10W 68K	1	
R365		VRE0034E222	M.RESISTOR CH 1/10W 2.2K	1	
R366		VRE0034E512	M.RESISTOR CH 1/10W 5.1K	1	
R367		VRE0034E822	M.RESISTOR CH 1/10W 8.2K	1	
R368		VRE0034E203	M.RESISTOR CH 1/10W 20K	1	
R501		ERJ6GEYJ103	M.RESISTOR CH 1/10W 10K	1	
R502,03		ERJ6GEYJ223	M.RESISTOR CH 1/10W 22K	2	
R508		ERJ6GEYJ103	M.RESISTOR CH 1/10W 10K	1	
R509		ERJ6GEYJ223	M.RESISTOR CH 1/10W 22K	1	
R510		ERJ6GEYJ273	M.RESISTOR CH1/10W 27K	1	
R511		ERJ6GEYJ103	M.RESISTOR CH 1/10W 10K	1	
R701		ERJ6GEYJ104	M.RESISTOR CH 1/10W 100K	1	
R702,03		ERJ6GEYJ332	M.RESISTOR CH 1/10W 3.3K	2	
R704		ERJ6GEYJ102	M.RESISTOR CH 1/10W 1K	1	
R705		ERJ6GEYJ272	M.RESISTOR CH 1/10W 2.7K	1	
R706		ERJ6GEYJ102	M.RESISTOR CH 1/10W 1K	1	
R707		ERJ6GEYJ104	M.RESISTOR CH 1/10W 100K	1	
R709		ERJ6GEYJ472	M.RESISTOR CH 1/10W 4.7K	1	
R710		ERJ6GEYJ682	M.RESISTOR CH 1/10W 6.8K	1	
R728,29		ERJ6GEYJ821	M.RESISTOR CH 1/10W 820	2	
R730		ERJ6GEYJ681	M.RESISTOR CH 1/10W 680	1	
R731		ERJ6GEY0R00	M.RESISTOR CH 1/10W 0	1	
R732		ERJ6GEYG112	M.RESISTOR CH 1/10W 1.1K	1	
R733		ERJ6GEYJ103	M.RESISTOR CH 1/10W 10K	1	
R734		ERJ6GEYJ183	M.RESISTOR CH 1/10W 18K	1	
R735		ERJ6GEYJ562	M.RESISTOR CH 1/10W 5.6K	1	
R736		ERJ6GEYJ104	M.RESISTOR CH 1/10W 100K	1	
R737,38		ERJ6GEYJ122	M.RESISTOR CH1/10W 1.2K	2	
R739		VRE0034E362	M.RESISTOR CH 1/10W 3.6K	1	
R740		ERJ6GEYJ122	M.RESISTOR CH1/10W 1.2K	1	
R741,42		ERJ6GEYJ103	M.RESISTOR CH 1/10W 10K	2	
R743		ERJ6GEYJ561	M.RESISTOR CH 1/10W 560	1	
R744		ERJ6GEYJ473	M.RESISTOR CH 1/10W 47K	1	
R745		ERJ6GEYJ563	M.RESISTOR CH 1/10W 56K	1	
R801		ERJ6GEYJ104	M.RESISTOR CH 1/10W 100K	1	
R802,03		ERJ6GEYJ332	M.RESISTOR CH 1/10W 3.3K	2	
R804		ERJ6GEYJ102	M.RESISTOR CH 1/10W 1K	1	
R805		ERJ6GEYJ272	M.RESISTOR CH 1/10W 2.7K	1	
R806		ERJ6GEYJ102	M.RESISTOR CH 1/10W 1K	1	
R807		ERJ6GEYJ104	M.RESISTOR CH 1/10W 100K	1	
R809		ERJ6GEYJ472	M.RESISTOR CH 1/10W 4.7K	1	
R810		ERJ6GEYJ682	M.RESISTOR CH 1/10W 6.8K	1	
R828,29		ERJ6GEYJ821	M.RESISTOR CH 1/10W 820	2	
R830		ERJ6GEYJ681	M.RESISTOR CH 1/10W 680	1	
R831		ERJ6GEY0R00	M.RESISTOR CH 1/10W 0	1	
R832		ERJ6GEYG112	M.RESISTOR CH 1/10W 1.1K	1	
R833		ERJ6GEYJ103	M.RESISTOR CH 1/10W 10K	1	
R834		ERJ6GEYJ183	M.RESISTOR CH 1/10W 18K	1	
R835		ERJ6GEYJ562	M.RESISTOR CH 1/10W 5.6K	1	
R836		ERJ6GEYJ104	M.RESISTOR CH 1/10W 100K	1	
R837,38		ERJ6GEYJ122	M.RESISTOR CH1/10W 1.2K	2	
R839		VRE0034E362	M.RESISTOR CH 1/10W 3.6K	1	
R840		ERJ6GEYJ122	M.RESISTOR CH1/10W 1.2K	1	
R841,42		ERJ6GEYJ103	M.RESISTOR CH 1/10W 10K	2	
R843		ERJ6GEYJ561	M.RESISTOR CH 1/10W 560	1	
R844		ERJ6GEYJ473	M.RESISTOR CH 1/10W 47K	1	
R845		VRE0034E303	M.RESISTOR CH 1/10W 30K	1	#R
R914		ERJ6GEYJ104	M.RESISTOR CH 1/10W 100K	1	
R917,18		ERJ6GEYJ561	M.RESISTOR CH 1/10W 560	2	
R919,20		ERJ6GEYJ222	M.RESISTOR CH 1/10W 2.2K	2	
R921		VRE0034E223	M.RESISTOR CH 1/10W 22K	1	
R922,23		ERJ6GEYJ104	M.RESISTOR CH 1/10W 100K	2	
R924		ERJ6GEYJ393	M.RESISTOR CH 1/10W 39K	1	
R925		ERJ6GEYJ123	M.RESISTOR CH1/10W 12K	1	
R926		ERJ6GEYJ334	M.RESISTOR CH 1/10W 330K	1	
R927		ERJ6GEYJ103	M.RESISTOR CH 1/10W 10K	1	
R928		ERJ6GEYJ104	M.RESISTOR CH 1/10W 100K	1	
R933		ERJ6GEYJ392	M.RESISTOR CH 1/10W 3.9K	1	
R939		ERJ6GEYJ102	M.RESISTOR CH 1/10W 1K	1	
R940		ERJ6GEYJ560	M.RESISTOR CH 1/10W 56	1	
R941		ERJ6GEYJ392	M.RESISTOR CH 1/10W 3.9K	1	
R942		ERJ6GEYJ102	M.RESISTOR CH 1/10W 1K	1	
R943		ERJ6GEYJ222	M.RESISTOR CH 1/10W 2.2K	1	
R944		ERJ6GEYJ823	M.RESISTOR CH 1/10W 82K	1	
R945		ERJ6GEYJ273	M.RESISTOR CH1/10W 27K	1	
R946-48		ERJ6GEYJ102	M.RESISTOR CH 1/10W 1K	3	
R949		ERJ6GEYJ390	M.RESISTOR CH 1/10W 39	1	
R950		ERJ6GEYJ392	M.RESISTOR CH 1/10W 3.9K	1	
R951		ERJ6GEYJ102	M.RESISTOR CH 1/10W 1K	1	
R952		ERJ6GEYJ222	M.RESISTOR CH 1/10W 2.2K	1	
R953		ERJ6GEYJ823	M.RESISTOR CH 1/10W 82K	1	
R954		ERJ6GEYJ273	M.RESISTOR CH1/10W 27K	1	
R955,56		ERJ6GEYJ102	M.RESISTOR CH 1/10W 1K	2	
R957		ERJ6GEYJ222	M.RESISTOR CH 1/10W 2.2K	1	
R958		ERJ6GEYJ823	M.RESISTOR CH 1/10W 82K	1	
R959		ERJ6GEYJ273	M.RESISTOR CH1/10W 27K	1	
R960		ERJ6GEYJ101	M.RESISTOR CH 1/10W 100	1	
R961		ERJ6GEYJ103	M.RESISTOR CH 1/10W 10K	1	
R963		ERJ6GEYJ560	M.RESISTOR CH 1/10W 56	1	
SW101		VSS023703	SWITCH	1	
SW301		VSS023703	SWITCH	1	

Refer to the P.C.BOARDS LIST, page 6-1-1, before using this page.

Ref.No.		Part No.	Part Name & Description	Pcs	Remarks
TP1		VJR0582	PACK PIN	1	
TP101		VJR0582	PACK PIN	1	
TP301		VJR0582	PACK PIN	1	
TP702,03		VJR0582	PACK PIN	2	
TP802,03		VJR0582	PACK PIN	2	
TP901		VJR0582	PACK PIN	1	
TPG101		VJR0582	PACK PIN	1	
TPG301		VJR0582	PACK PIN	1	
TPG901		VJR0582	PACK PIN	1	
VR102		ERDS2TJ821	C.RESISTOR 1/4W 820	1	
VR103		VRV0109B502	V.RESISTOR 5K	1	
VR302		ERDS2TJ821	C.RESISTOR 1/4W 820	1	
VR303		VRV0109B502	V.RESISTOR 5K	1	
VR703		VRV0109B203	V.RESISTOR 20K	1	
VR704		VRV0109B103	V.RESISTOR 10K	1	
VR803		VRV0109B203	V.RESISTOR 20K	1	
VR804		VRV0109B502	V.RESISTOR 5K	1	
			MISCELLANEOUS		
		VML2143	CARD PULLER	1	
		VML2144	CARD PULLER	1	
		VMS4174	PIN	6	
		VMZ1547	BARRIER	1	
		VSC3056	PIN	1	
		VXA3966	P.C.B. SHIELD PLATE	1	
		XNG26E	NUT	4	
		XYNV3+K6FR	SCREW	6	
		XYN26+C12	SCREW	4	

Refer to the P.C.BOARDS LIST, page 6-1-1, before using this page.

Ref.No.		Part No.	Part Name & Description	Pcs	Remarks
	■	VEP84095D	P.C.BOARD W/COMPONENT		FOR AU-65-E,B
			W6 AUDIO		
	■	VEP80635A	P.C.BOARD W/COMPONENT		
			W6S TC TRAP SUB		
			CAPACITORS		
C1,C2		ECEA1CU470	E.CAPACITOR 16V 47U	2	
C3		ECEA0JU101	E.CAPACITOR 6.3V 100U	1	
C4		ECUM1E104ZFN	C.CAPACITOR CH 25V 0.1U	1	
C5		ECEA1CU100	E.CAPACITOR 16V 10U	1	
C6		ECUM1E473KBN	C.CAPACITOR CH 25V 0.047U	1	
C7		ECUM1H222KBN	C.CAPACITOR CH 50V 2200P	1	
C8		ECUM1E104ZFN	C.CAPACITOR CH 25V 0.1U	1	
C9		ECEA1CU100	E.CAPACITOR 16V 10U	1	
C10		ECEA1CN100S	E.CAPACITOR 16V 10U	1	
C11		ECUM1H272KBN	C.CAPACITOR CH 50V 2700P	1	
C12		ECEA1CU100	E.CAPACITOR 16V 10U	1	
C13,14		ECEA1CU470	E.CAPACITOR 16V 47U	2	
C17		ECUM1H822KBN	C.CAPACITOR CH 50V 8200P	1	
C101		ECUM1H220JCN	C.CAPACITOR CH 50V 22P	1	
C102		ECEA1CBZ100	E.CAPACITOR 16V 10U	1	
C103		ECUM1H470JCN	C.CAPACITOR CH 50V 47P	1	
C104		ECEA1CBZ100	E.CAPACITOR 16V 10U	1	
C105		ECEA1CPZ470	E.CAPACITOR 16V 47U	1	
C106		ECUM1H470JCN	C.CAPACITOR CH 50V 47P	1	
C107		ECUM1E104ZFN	C.CAPACITOR CH 25V 0.1U	1	
C108		ECEA1CPZ101	E.CAPACITOR 16V 100U	1	
C109		ECEA1CBZ470	E.CAPACITOR 16V 47U	1	
C110		ECEA1CPZ101	E.CAPACITOR 16V 100U	1	
C111		ECUM1E104ZFN	C.CAPACITOR CH 25V 0.1U	1	
C112,13		ECEA1CPZ101	E.CAPACITOR 16V 100U	2	
C114		ECEA1CBZ100	E.CAPACITOR 16V 10U	1	
C115		ECUM1H220JCN	C.CAPACITOR CH 50V 22P	1	
C116,17		ECEA1CBZ100	E.CAPACITOR 16V 10U	2	
C118		ECEA1CPZ470	E.CAPACITOR 16V 47U	1	
C120		ECUM1H470JCN	C.CAPACITOR CH 50V 47P	1	
C121		ECUM1H820JCN	C.CAPACITOR CH 50V 82P	1	
C122		ECUM1H151JCN	C.CAPACITOR CH 50V 150P	1	
C124		ECUM1H470JCN	C.CAPACITOR CH 50V 47P	1	
C125		ECEA0JPZ471	E.CAPACITOR 6.3V 470U	1	
C127,28		ECEA1CPZ470	E.CAPACITOR 16V 47U	2	
C129		ECQM1H473JF	P.CAPACITOR 50V 0.047U	1	
C130		ECUM1H331JCN	C.CAPACITOR CH 50V 330P	1	
C131,32		ECEA1CPZ470	E.CAPACITOR 16V 47U	2	
C133		ECUM1H562KBN	C.CAPACITOR CH 50V 5600P	1	
C134,35		ECEA1CBZ100	E.CAPACITOR 16V 10U	2	
C136		ECQP1H472FZ	P.CAPACITOR 50V 4700P	1	
C137		ECEA1CPZ100	E.CAPACITOR 16V 10U	1	
C138		ECQM1H473JF	P.CAPACITOR 50V 0.047U	1	
C139		ECEA1HPZR22	E.CAPACITOR 50V 0.22U	1	
C140,41		ECEA1HPZR68	E.CAPACITOR 50V 0.98U	2	
C142		ECEA1HPZR22	E.CAPACITOR 50V 0.22U	1	
C143		ECQM1H473JF	P.CAPACITOR 50V 0.047U	1	
C144		ECEA1CPZ100	E.CAPACITOR 16V 10U	1	
C145		ECQP1H472FZ	P.CAPACITOR 50V 4700P	1	
C146		ECEA1CBZ100	E.CAPACITOR 16V 10U	1	
C147		ECQP1H103FZ	P.CAPACITOR 50V 0.01U	1	
C148,49		ECQM1H394JF	P.CAPACITOR 50V 0.39U	2	
C201		ECUM1H391JCN	C.CAPACITOR CH 50V 390P	1	
C202		ECEA1CBZ100	E.CAPACITOR 16V 10U	1	
C203		ECUM1H272KBN	C.CAPACITOR CH 50V 2700P	1	
C204,05		ECEA1CBZ100	E.CAPACITOR 16V 10U	2	
C206		ECEA1CBZ470	E.CAPACITOR 16V 47U	1	
C207		ECUM1H682KBN	C.CAPACITOR CH 50V 6800P	1	
C208		ECQM1H473JF	P.CAPACITOR 50V 0.047U	1	
C209		ECEA1CBZ100	E.CAPACITOR 16V 10U	1	
C210		ECQM1H394JF	P.CAPACITOR 50V 0.39U	1	
C211		ECUM1H222KBN	C.CAPACITOR CH 50V 2200P	1	
C212		ECUM1H472KBN	C.CAPACITOR CH 50V 4700P	1	
C213		ECUM1H682KBN	C.CAPACITOR CH 50V 6800P	1	
C214		ECUM1H103KBN	C.CAPACITOR CH 50V 0.01U	1	
C215		ECUM1E153KBN	C.CAPACITOR CH 25V 0.015U	1	
C216		ECEA1CBZ100	E.CAPACITOR 16V 10U	1	
C217		ECUM1H152KBN	C.CAPACITOR CH 50V 1500P	1	
C218		ECUM1H122KBN	C.CAPACITOR CH 50V 1200P	1	
C219		ECUM1H152KBN	C.CAPACITOR CH 50V 1500P	1	
C220		ECUM1H102KBN	C.CAPACITOR CH 50V 1000P	1	
C301		ECUM1H220JCN	C.CAPACITOR CH 50V 22P	1	
C302		ECEA1CBZ100	E.CAPACITOR 16V 10U	1	
C303		ECUM1H470JCN	C.CAPACITOR CH 50V 47P	1	
C304		ECEA1CBZ100	E.CAPACITOR 16V 10U	1	
C305		ECEA1CPZ470	E.CAPACITOR 16V 47U	1	
C306		ECUM1H470JCN	C.CAPACITOR CH 50V 47P	1	
C307		ECUM1E104ZFN	C.CAPACITOR CH 25V 0.1U	1	
C308		ECEA1CPZ101	E.CAPACITOR 16V 100U	1	
C309		ECEA1CBZ470	E.CAPACITOR 16V 47U	1	
C310		ECEA1CPZ101	E.CAPACITOR 16V 100U	1	
C311		ECUM1E104ZFN	C.CAPACITOR CH 25V 0.1U	1	
C312,13		ECEA1CPZ101	E.CAPACITOR 16V 100U	2	
C314		ECEA1CBZ100	E.CAPACITOR 16V 10U	1	
C315		ECUM1H220JCN	C.CAPACITOR CH 50V 22P	1	
C316,17		ECEA1CBZ100	E.CAPACITOR 16V 10U	2	
C318		ECEA1CPZ470	E.CAPACITOR 16V 47U	1	
C320		ECUM1H470JCN	C.CAPACITOR CH 50V 47P	1	
C321		ECUM1H820JCN	C.CAPACITOR CH 50V 82P	1	
C322		ECUM1H151JCN	C.CAPACITOR CH 50V 150P	1	
C324		ECUM1H470JCN	C.CAPACITOR CH 50V 47P	1	
C325		ECEA0JPZ471	E.CAPACITOR 6.3V 470U	1	
C327,28		ECEA1CPZ470	E.CAPACITOR 16V 47U	2	
C329		ECQM1H473JF	P.CAPACITOR 50V 0.047U	1	
C330		ECUM1H331JCN	C.CAPACITOR CH 50V 330P	1	
C331,32		ECEA1CPZ470	E.CAPACITOR 16V 47U	2	
C333		ECUM1H562KBN	C.CAPACITOR CH 50V 5600P	1	
C334,35		ECEA1CBZ100	E.CAPACITOR 16V 10U	2	
C336		ECQP1H472FZ	P.CAPACITOR 50V 4700P	1	
C337		ECEA1CPZ100	E.CAPACITOR 16V 10U	1	
C338		ECQM1H473JF	P.CAPACITOR 50V 0.047U	1	
C339		ECEA1HPZR22	E.CAPACITOR 50V 0.22U	1	
C340,41		ECEA1HPZR68	E.CAPACITOR 50V 0.98U	2	
C342		ECEA1HPZR22	E.CAPACITOR 50V 0.22U	1	
C343		ECQM1H473JF	P.CAPACITOR 50V 0.047U	1	
C344		ECEA1CPZ100	E.CAPACITOR 16V 10U	1	
C345		ECQP1H472FZ	P.CAPACITOR 50V 4700P	1	
C346		ECEA1CBZ100	E.CAPACITOR 16V 10U	1	
C347		ECQP1H103FZ	P.CAPACITOR 50V 0.01U	1	
C348,49		ECQM1H394JF	P.CAPACITOR 50V 0.39U	2	
C401		ECUM1H391JCN	C.CAPACITOR CH 50V 390P	1	
C402		ECEA1CBZ100	E.CAPACITOR 16V 10U	1	
C403		ECUM1H272KBN	C.CAPACITOR CH 50V 2700P	1	
C404,05		ECEA1CBZ100	E.CAPACITOR 16V 10U	2	
C406		ECEA1CBZ470	E.CAPACITOR 16V 47U	1	
C407		ECUM1H682KBN	C.CAPACITOR CH 50V 6800P	1	
C408		ECQM1H473JF	P.CAPACITOR 50V 0.047U	1	
C409		ECEA1CBZ100	E.CAPACITOR 16V 10U	1	
C410		ECQM1H394JF	P.CAPACITOR 50V 0.39U	1	
C411		ECUM1H222KBN	C.CAPACITOR CH 50V 2200P	1	
C412		ECUM1H472KBN	C.CAPACITOR CH 50V 4700P	1	
C413		ECUM1H682KBN	C.CAPACITOR CH 50V 6800P	1	
C414		ECUM1H103KBN	C.CAPACITOR CH 50V 0.01U	1	
C415		ECUM1E153KBN	C.CAPACITOR CH 25V 0.015U	1	
C416		ECEA1CBZ100	E.CAPACITOR 16V 10U	1	
C417		ECUM1H152KBN	C.CAPACITOR CH 50V 1500P	1	
C418		ECUM1H122KBN	C.CAPACITOR CH 50V 1200P	1	
C419		ECUM1H152KBN	C.CAPACITOR CH 50V 1500P	1	
C420		ECUM1H102KBN	C.CAPACITOR CH 50V 1000P	1	
C501		ECEA1CU101	E.CAPACITOR 16V 100U	1	
C503		ECEA1CU220	E.CAPACITOR 16V 22U	1	
C551		ECUM1E104ZFN	C.CAPACITOR CH 25V 0.1U	1	
C553		ECEA1AU101	E.CAPACITOR 10V 100U	1	
C554,55		ECUM1E104ZFN	C.CAPACITOR CH 25V 0.1U	2	
C556		ECEA1VU101	E.CAPACITOR 35V 100U	1	
C557		ECEA1EU101	E.CAPACITOR 25V 100U	1	
C558		ECQM1H104JF	P.CAPACITOR 50V 0.1U	1	
C559,60		ECUM1H103KBN	C.CAPACITOR CH 50V 0.01U	2	
C561		ECEA1EU100	E.CAPACITOR 25V 10U	1	

Refer to the P.C.BOARDS LIST, page 6-1-1, before using this page.

Ref.No.		Part No.	Part Name & Description	Pcs	Remarks
C562		ECCD2H181J	C.CAPACITOR 500V 180P	1	
C563		ECCD2H271J	C.CAPACITOR 500V 270P	1	
C564		ECQM1H104JF	P.CAPACITOR 50V 0.1U	1	
C565,66		ECUM1H103KBN	C.CAPACITOR CH 50V 0.01U	2	
C567		ECEA1EU100	E.CAPACITOR 25V 10U	1	
C568		ECCD2H181J	C.CAPACITOR 500V 180P	1	
C569		ECCD2H271J	C.CAPACITOR 500V 270P	1	
C570		ECQM1H104JF	P.CAPACITOR 50V 0.1U	1	
C571-73		ECUM1H103KBN	C.CAPACITOR CH 50V 0.01U	3	
C574		ECEA1EU100	E.CAPACITOR 25V 10U	1	
C575		ECQM1H104JF	P.CAPACITOR 50V 0.1U	1	
C576		VCF2JAB182JE	P.CAPACITOR V	1	
C577		ECQM1H104JF	P.CAPACITOR 50V 0.1U	1	
C578-80		ECUM1H103KBN	C.CAPACITOR CH 50V 0.01U	3	
C581		ECEA1EU100	E.CAPACITOR 25V 10U	1	
C582		ECQM1H104JF	P.CAPACITOR 50V 0.1U	1	
C583		VCF2JAB182JE	P.CAPACITOR V	1	
C584		ECQM1H104JF	P.CAPACITOR 50V 0.1U	1	
C585,86		ECUM1H103KBN	C.CAPACITOR CH 50V 0.01U	2	
C587		ECEA1EU100	E.CAPACITOR 25V 10U	1	
C588		VCF2JAB102JE	P.CAPACITOR V	1	
C589		ECCD2H680K	C.CAPACITOR 500V 68P	1	
C590		ECEA1AU470	E.CAPACITOR 10V 47U	1	
C591		ECQM1H104JF	P.CAPACITOR 50V 0.1U	1	
C592-94		ECUM1H103KBN	C.CAPACITOR CH 50V 0.01U	3	
C595		ECEA1EU100	E.CAPACITOR 25V 10U	1	
C596		VCF2JAB222JE	P.CAPACITOR V	1	
C597		ECUM1E104ZFN	C.CAPACITOR CH 25V 0.1U	1	
C598,99		ECUM1H103KBN	C.CAPACITOR CH 50V 0.01U	2	
C600		ECEA1EU100	E.CAPACITOR 25V 10U	1	
C601		VCF2JAB222JE	P.CAPACITOR V	1	
C602		ECUM1E104ZFN	C.CAPACITOR CH 25V 0.1U	1	
C603,04		ECUM1H103KBN	C.CAPACITOR CH 50V 0.01U	2	
C605		ECEA1EU100	E.CAPACITOR 25V 10U	1	
C606		VCF2JAB222JE	P.CAPACITOR V	1	
C607,08		ECUM1H330JCN	C.CAPACITOR CH 50V 33P	2	
C609		ECEA1HU3R3	E.CAPACITOR 50V 3.3U	1	
C610-12		ECUM1H331JCN	C.CAPACITOR CH 50V 330P	3	
C701		ECEA1CBZ470	E.CAPACITOR 16V 47U	1	
C702		ECUM1H182KBN	C.CAPACITOR CH 50V 1800P	1	
C703		ECUM1H821JCN	C.CAPACITOR CH 50V 820P	1	
C712		ECEA1HPZ4R7	E.CAPACITOR 50V 4.7U	1	
C713		ECEA1HPZ3R3	E.CAPACITOR 50V 3.3U	1	
C714		ECQM1H682JF	P.CAPACITOR 50V 6800P	1	
C715		ECQM1H102JF	P.CAPACITOR 50V 1000P	1	
C716		ECQM1H223JF	P.CAPACITOR 50V 0.022U	1	
C717		ECEA1CPZ100	E.CAPACITOR 16V 10U	1	
C719		ECEA1HPZ4R7	E.CAPACITOR 50V 4.7U	1	
C720		ECEA1CPZ470	E.CAPACITOR 16V 47U	1	
C721		ECQM1H103JF	P.CAPACITOR 50V 0.01U	1	
C722		ECQM1H332JF	P.CAPACITOR 50V 3300P	1	
C723		ECUM1H272KBN	C.CAPACITOR CH 50V 2700P	1	
C724,25		ECUM1H102KBN	C.CAPACITOR CH 50V 1000P	2	
C726		ECEA1CBZ100	E.CAPACITOR 16V 10U	1	
C727		ECEA1CPZ101	E.CAPACITOR 16V 100U	1	
C728		ECUM1E104ZFN	C.CAPACITOR CH 25V 0.1U	1	
C729,30		ECUM1H103KBN	C.CAPACITOR CH 50V 0.01U	2	
C731		ECEA1HPZ4R7	E.CAPACITOR 50V 4.7U	1	
C732		ECQM1H223JF	P.CAPACITOR 50V 0.022U	1	
C733		ECUM1H122KBN	C.CAPACITOR CH 50V 1200P	1	
C801		ECEA1CBZ470	E.CAPACITOR 16V 47U	1	
C802		ECUM1H182KBN	C.CAPACITOR CH 50V 1800P	1	
C803		ECUM1H821JCN	C.CAPACITOR CH 50V 820P	1	
C804,05		ECUM1H222KBN	C.CAPACITOR CH 50V 2200P	2	
C812		ECEA1HPZ4R7	E.CAPACITOR 50V 4.7U	1	
C813		ECEA1HPZ3R3	E.CAPACITOR 50V 3.3U	1	
C814		ECQM1H682JF	P.CAPACITOR 50V 6800P	1	
C815		ECQM1H102JF	P.CAPACITOR 50V 1000P	1	
C816		ECQM1H223JF	P.CAPACITOR 50V 0.022U	1	
C817		ECEA1CPZ100	E.CAPACITOR 16V 10U	1	
C819		ECEA1HPZ4R7	E.CAPACITOR 50V 4.7U	1	
C820		ECEA1CPZ470	E.CAPACITOR 16V 47U	1	
C821		ECQM1H103JF	P.CAPACITOR 50V 0.01U	1	
C822		ECQM1H332JF	P.CAPACITOR 50V 3300P	1	
C823		ECUM1H272KBN	C.CAPACITOR CH 50V 2700P	1	

Ref.No.		Part No.	Part Name & Description	Pcs	Remarks
C824,25		ECUM1H102KBN	C.CAPACITOR CH 50V 1000P	2	
C826		ECEA1CBZ100	E.CAPACITOR 16V 10U	1	
C827		ECEA1CPZ101	E.CAPACITOR 16V 100U	1	
C828		ECUM1E104ZFN	C.CAPACITOR CH 25V 0.1U	1	
C829,30		ECUM1H103KBN	C.CAPACITOR CH 50V 0.01U	2	
C831		ECEA1HPZ4R7	E.CAPACITOR 50V 4.7U	1	
C832		ECQM1H223JF	P.CAPACITOR 50V 0.022U	1	
C833		ECUM1H122KBN	C.CAPACITOR CH 50V 1200P	1	
C902		ECEA1AU470	E.CAPACITOR 10V 47U	1	
C903		ECUM1E104ZFN	C.CAPACITOR CH 25V 0.1U	1	
C904		ECEA1CPZ101	E.CAPACITOR 16V 100U	1	
C905		ECUM1E104ZFN	C.CAPACITOR CH 25V 0.1U	1	
C906,07		ECEA1CPZ101	E.CAPACITOR 16V 100U	2	
C908		ECUM1E104ZFN	C.CAPACITOR CH 25V 0.1U	1	
C909		ECEA1CPZ101	E.CAPACITOR 16V 100U	1	
C910-12		ECUM1H101JCN	C.CAPACITOR CH 50V 100P	3	
C913-15		ECUM1H151JCN	C.CAPACITOR CH 50V 150P	3	
C916		ECUM1H103KBN	C.CAPACITOR CH 50V 0.01U	1	
C917		ECEA1CPZ100	E.CAPACITOR 16V 10U	1	
C918		ECUM1E104ZFN	C.CAPACITOR CH 25V 0.1U	1	
C920		ECUM1H151JCN	C.CAPACITOR CH 50V 150P	1	
C921,22		ECUM1H103KBN	C.CAPACITOR CH 50V 0.01U	2	
C923		ECUM1H331JCN	C.CAPACITOR CH 50V 330P	1	
C924		ECEA1HPZ010	E.CAPACITOR 50V 1U	1	
C925		ECQM1H223JF	P.CAPACITOR 50V 0.022U	1	
C926		ECUM1H103KBN	C.CAPACITOR CH 50V 0.01U	1	
C929		ECUM1H151JCN	C.CAPACITOR CH 50V 150P	1	
C930,31		ECUM1H103KBN	C.CAPACITOR CH 50V 0.01U	2	
C932		ECUM1H271JCN	C.CAPACITOR CH 50V 270P	1	
C933		ECUM1H391JCN	C.CAPACITOR CH 50V 390P	1	
C934,35		ECUM1H103KBN	C.CAPACITOR CH 50V 0.01U	2	
C936		ECEA1CU100	E.CAPACITOR 16V 10U	1	
C937		ECUM1E104ZFN	C.CAPACITOR CH 25V 0.1U	1	
C938-40		ECEA1CPZ101	E.CAPACITOR 16V 100U	3	
C941		ECEA1HPZ3R3	E.CAPACITOR 50V 3.3U	1	
C942		ECEA1CPZ470	E.CAPACITOR 16V 47U	1	
C944		ECUM1H103KBN	C.CAPACITOR CH 50V 0.01U	1	
C945,46		ECEA1CPZ101	E.CAPACITOR 16V 100U	2	
C947,48		ECEA1HPZ010	E.CAPACITOR 50V 1U	2	
C949		ECUM1E104ZFN	C.CAPACITOR CH 25V 0.1U	1	
C950		ECEA1CPZ101	E.CAPACITOR 16V 100U	1	
D1		MA153	DIODE	1	
D2		MA151K	DIODE	1	
D3,D4		MA3024	DIODE	2	
D101		MA151K	DIODE	1	
D301		MA151K	DIODE	1	
D501		MA153	DIODE	1	
D502		MA151WA	DIODE	1	
D552-57		MA153	DIODE	6	
D558-60		MA3100	DIODE	3	
D561-64		MA153	DIODE	4	
D565,66		MA151K	DIODE	2	
D567,68		MA165	DIODE	2	
D569		MA151K	DIODE	1	
D570-71		MA165	DIODE	2	
D901		MA151WK	DIODE	1	
D902-04		MA151K	DIODE	3	
D905		MA153	DIODE	1	
FL1		VLQ0142	COIL	1	
FL101		EIR7QH007Q	FILTER	1	
FL102		VLF0829	FILTER	1	
FL103		ELM7Q306A	COIL	1	
FL201		VLQ0190	COIL 4.7MH	1	
FL202		VLQ0402	COIL	1	
FL301		EIR7QH007Q	FILTER	1	
FL302		VLF0829	FILTER	1	
FL303		ELM7Q306A	COIL	1	
FL401		VLQ0190	COIL 4.7MH	1	
FL402		VLQ0402	COIL	1	

Refer to the P.C.BOARDS LIST, page 6-1-1, before using this page.

Ref.No.		Part No.	Part Name & Description	Pcs	Remarks
FL701		VLF0427	FILTER	1	
FL801		VLF0427	FILTER	1	
FL901		ELB4L053	FILTER	1	
FL902		ELB4M043	FILTER	1	
IC1-C3		MC14053BF	IC	3	(R)
IC4		NJM4558M	IC	1	
IC5,C6		RC082BM	IC	2	
IC101		AN6558S	IC	1	
IC102		RC4556MB	IC	1	
IC103		MC14053BF	IC	1	(R)
IC104		NJM4558M	IC	1	
IC105		TEA0666T	IC	1	
IC106		AN78N09	IC	1	
IC107		AN79N09	IC	1	
IC108		NJM4558M	IC	1	
IC201-03		NJM4558M	IC	3	
IC301		AN6558S	IC	1	
IC302		RC4556MB	IC	1	
IC303		MC14053BF	IC	1	(R)
IC304		NJM4558M	IC	1	
IC305		TEA0666T	IC	1	
IC306		AN78N09	IC	1	
IC307		AN79N09	IC	1	
IC308		NJM4558M	IC	1	
IC401-03		NJM4558M	IC	3	
IC552		MB620412PF	IC	1	
IC553		AN78L20	IC	1	
IC554-56		LM2904M	IC	3	
IC701		NJM4558M	IC	1	
IC703		NJM4558M	IC	1	
IC801		NJM4558M	IC	1	
IC802		MC14053BF	IC	1	(R)
IC803,04		NJM4558M	IC	2	
IC805		BA7700K1	IC	1	
IC901		AN78L12	IC	1	
IC902		AN78L05	IC	1	
IC903		AN79L09	IC	1	
IC904		AN78L09	IC	1	
L1		EIR7QG010B	IF TRANSFORMER	1	
L101,02		VLQEL05F101K	COIL 100UH	2	
L301,02		VLQEL05F101K	COIL 100UH	2	
L551		VLQEL05S2R2K	COIL 2.2UH	1	
L552		VLQEL05S471K	COIL 470UH	1	
L553,54		VLQEL05S470J	COIL 47UH	2	
L901		VLQEL05S470J	COIL 47UH	1	
L902		VLQEL05S221J	COIL 220UH	1	
L903		VLQEL05F101K	COIL 100UH	1	
L904		VLQEL05S820J	COIL 82UH	1	
L905		VLQEL05S331J	COIL 330UH	1	
L906,07		VLQEL05F101K	COIL 100UH	2	
L909		VLQEL05S271J	COIL 270UH	1	
L910-13		VLQEL05F101K	COIL 100UH	4	
P101		VJP1232R	CONNECTOR(MALE) 5P	1	
P301		VJP1232G	CONNECTOR(MALE)	1	
P551		VJP1239T	CONNECTOR(MALE) 12P	1	
P553		VJP1230T	CONNECTOR(MALE) 3P	1	
Q1		2SD602	TRANSISTOR	1	(Q,R)
Q2		UN2113	TRANSISTOR-RESISTOR	1	
Q3		2SA1018-R	TRANSISTOR	1	(R)
Q4,Q5		2SC3478A	TRANSISTOR	2	
Q6		2SD602	TRANSISTOR	1	(Q,R)
Q7		2SD1328	TRANSISTOR CHIP	1	(Q,R)
Q11		UN2211	TRANSISTOR-RESISTOR	1	

Ref.No.		Part No.	Part Name & Description	Pcs	Remarks
Q12		2SB710	TRANSISTOR	1	
Q14		UN2210	TRANSISTOR-RESISTOR	1	
Q101		UN2113	TRANSISTOR-RESISTOR	1	
Q102		UN2213	TRANSISTOR-RESISTOR	1	
Q103-05		2SD601	TRANSISTOR CHIP	3	(Q,R)
Q106		UN2213	TRANSISTOR-RESISTOR	1	
Q107		2SD1328	TRANSISTOR CHIP	1	(Q,R)
Q108		UN2113	TRANSISTOR-RESISTOR	1	
Q109,10		2SD601	TRANSISTOR CHIP	2	(Q,R)
Q111,12		2SD1011	TRANSISTOR	2	
Q113		2SA1018-R	TRANSISTOR	1	(R)
Q114		2SK146	TRANSISTOR	1	(B,L)
Q115		2SD601	TRANSISTOR CHIP	1	(Q,R)
Q116		2SB709	TRANSISTOR CHIP	1	(Q,R)
Q117		2SD601	TRANSISTOR CHIP	1	(Q,R)
Q118-20		UN2213	TRANSISTOR-RESISTOR	3	
Q122		UN2213	TRANSISTOR-RESISTOR	1	
Q201		2SD601	TRANSISTOR CHIP	1	(Q,R)
Q202		2SB709	TRANSISTOR CHIP	1	(Q,R)
Q203		2SD601	TRANSISTOR CHIP	1	(Q,R)
Q204		2SB709	TRANSISTOR CHIP	1	(Q,R)
Q205		2SD1328	TRANSISTOR CHIP	1	(Q,R)
Q301		UN2113	TRANSISTOR-RESISTOR	1	
Q302		UN2213	TRANSISTOR-RESISTOR	1	
Q303-05		2SD601	TRANSISTOR CHIP	3	(Q,R)
Q306		UN2213	TRANSISTOR-RESISTOR	1	
Q307		2SD1328	TRANSISTOR CHIP	1	(Q,R)
Q308		UN2113	TRANSISTOR-RESISTOR	1	
Q309,10		2SD601	TRANSISTOR CHIP	2	(Q,R)
Q311,12		2SD1011	TRANSISTOR	2	
Q313		2SA1018-R	TRANSISTOR	1	(R)
Q314		2SK146	TRANSISTOR	1	(B,L)
Q315		2SD601	TRANSISTOR CHIP	1	(Q,R)
Q316		2SB709	TRANSISTOR CHIP	1	(Q,R)
Q317		2SD601	TRANSISTOR CHIP	1	(Q,R)
Q318-20		UN2213	TRANSISTOR-RESISTOR	3	
Q322		UN2213	TRANSISTOR-RESISTOR	1	
Q401		2SD601	TRANSISTOR CHIP	1	(Q,R)
Q402		2SB709	TRANSISTOR CHIP	1	(Q,R)
Q403		2SD601	TRANSISTOR CHIP	1	(Q,R)
Q404		2SB709	TRANSISTOR CHIP	1	(Q,R)
Q405		2SD1328	TRANSISTOR CHIP	1	(Q,R)
Q501		2SB709	TRANSISTOR CHIP	1	(Q,R)
Q502		UN2113	TRANSISTOR-RESISTOR	1	
Q551-62		UN2213	TRANSISTOR-RESISTOR	12	
Q563,64		UN2113	TRANSISTOR-RESISTOR	2	
Q565-68		2SC2295	TRANSISTOR CHIP	4	(B,C)
Q571		2SC2497	TRANSISTOR	1	
Q572		2SB710	TRANSISTOR	1	
Q573,74		2SD1994A	TRANSISTOR	2	(Q,R)
Q575		2SC2497	TRANSISTOR	1	
Q576		2SB710	TRANSISTOR	1	
Q577,78		2SD1994A	TRANSISTOR	2	(Q,R)
Q579		2SD1992A	TRANSISTOR	1	
Q580		2SB710	TRANSISTOR	1	
Q581,82		2SD1994A	TRANSISTOR	2	(Q,R)
Q583		2SB710	TRANSISTOR	1	
Q584,85		2SD1328	TRANSISTOR CHIP	2	(Q,R)
Q586		2SD1992A	TRANSISTOR	1	
Q587		2SB710	TRANSISTOR	1	
Q588,89		2SD1994A	TRANSISTOR	2	(Q,R)
Q590		2SB710	TRANSISTOR	1	
Q591,92		2SD1328	TRANSISTOR CHIP	2	(Q,R)
Q593		2SC2497	TRANSISTOR	1	
Q594		2SB710	TRANSISTOR	1	
Q595,96		2SD1994A	TRANSISTOR	2	(Q,R)
Q597		2SD1992A	TRANSISTOR	1	
Q598		2SB710	TRANSISTOR	1	
Q599,00		2SD1994A	TRANSISTOR	2	(Q,R)
Q601		2SB710	TRANSISTOR	1	
Q602,03		2SD1328	TRANSISTOR CHIP	2	(Q,R)
Q604		UN2213	TRANSISTOR-RESISTOR	1	
Q605		2SB710	TRANSISTOR	1	
Q606		2SD1992A	TRANSISTOR	1	
Q607		2SB710	TRANSISTOR	1	

Refer to the P.C.BOARDS LIST, page 6-1-1, before using this page.

Ref.No.		Part No.	Part Name & Description	Pcs	Remarks
Q608,09		2SD1994A	TRANSISTOR	2	(Q,R)
Q610		2SB710	TRANSISTOR	1	
Q611,12		2SD1328	TRANSISTOR CHIP	2	(Q,R)
Q613		UN2213	TRANSISTOR-RESISTOR	1	
Q614		2SB710	TRANSISTOR	1	
Q615		2SD1992A	TRANSISTOR	1	
Q616		2SB710	TRANSISTOR	1	
Q617,18		2SD1994A	TRANSISTOR	2	(Q,R)
Q619-21		UN2213	TRANSISTOR-RESISTOR	3	
Q701		2SD1328	TRANSISTOR CHIP	1	(Q,R)
Q702		2SD601	TRANSISTOR CHIP	1	(Q,R)
Q801		2SD1328	TRANSISTOR CHIP	1	(Q,R)
Q802		2SD601	TRANSISTOR CHIP	1	(Q,R)
Q901		UN2113	TRANSISTOR-RESISTOR	1	
Q902-04		UN2213	TRANSISTOR-RESISTOR	3	
Q909		2SC2404	TRANSISTOR CHIP	1	(B,C)
Q910,11		2SD601	TRANSISTOR CHIP	2	(Q,R)
Q912		2SC2404	TRANSISTOR CHIP	1	(B,C)
Q913,14		2SD601	TRANSISTOR CHIP	2	(Q,R)
Q915		2SC2404	TRANSISTOR CHIP	1	(B,C)
Q916,17		2SD601	TRANSISTOR CHIP	2	(Q,R)
Q920		UN2113	TRANSISTOR-RESISTOR	1	
			RESISTORS		
R1		ERJ6GEYJ102	M.RESISTOR CH 1/10W 1K	1	
R2		ERJ6GEYJ223	M.RESISTOR CH 1/10W 22K	1	
R3,R4		ERJ6GEYJ473	M.RESISTOR CH 1/10W 47K	2	
R5		ERJ6GEYJ472	M.RESISTOR CH 1/10W 4.7K	1	
R6,R7		ERJ6GEYJ103	M.RESISTOR CH 1/10W 10K	2	
R8		ERJ6GEYJ104	M.RESISTOR CH 1/10W 100K	1	
R9		ERJ6GEYJ472	M.RESISTOR CH 1/10W 4.7K	1	
R10		ERJ6GEYJ471	M.RESISTOR CH 1/10W 470	1	
R11		ERJ6GEYJ103	M.RESISTOR CH 1/10W 10K	1	
R12		ERJ6GEYJ100	M.RESISTOR CH 1/10W 10	1	
R13		ERJ6GEYJ473	M.RESISTOR CH 1/10W 47K	1	
R14		ERJ6GEYJ102	M.RESISTOR CH 1/10W 1K	1	
R15		ERJ6GEY0R00	M.RESISTOR CH 1/10W 0	1	
R16		ERJ6GEYJ224	M.RESISTOR CH 1/10W 220K	1	
R17		ERJ6GEYJ562	M.RESISTOR CH 1/10W 5.6K	1	
R18		ERJ6GEYJ473	M.RESISTOR CH 1/10W 47K	1	
R19		ERJ6GEYJ331	M.RESISTOR CH 1/10W 330	1	
R20		ERJ6GEYJ473	M.RESISTOR CH 1/10W 47K	1	
R21		ERJ6GEYJ123	M.RESISTOR CH 1/10W 12K	1	
R22		ERJ6GEYJ104	M.RESISTOR CH 1/10W 100K	1	
R23		ERJ6GEYJ102	M.RESISTOR CH 1/10W 1K	1	
R24		ERJ6GEYJ470	M.RESISTOR CH 1/10W 47	1	
R25		ERJ6GEYJ332	M.RESISTOR CH 1/10W 3.3K	1	
R26		ERJ6GEYJ473	M.RESISTOR CH 1/10W 47K	1	
R27		ERJ6GEYJ472	M.RESISTOR CH 1/10W 4.7K	1	
R29		ERJ6GEYJ470	M.RESISTOR CH 1/10W 47	1	
R30		ERJ6GEYJ102	M.RESISTOR CH 1/10W 1K	1	
R39		ERJ6GEYJ104	M.RESISTOR CH 1/10W 100K	1	
R42,43		ERJ6GEYJ223	M.RESISTOR CH 1/10W 22K	2	
R44		ERJ6GEYJ104	M.RESISTOR CH 1/10W 100K	1	
R49		ERJ6GEYJ103	M.RESISTOR CH 1/10W 10K	1	
R50		ERDS2TJ223	C.RESISTOR 1/4W 22K	1	
R101,02		ERJ6GEYJ103	M.RESISTOR CH 1/10W 10K	2	
R104,05		ERJ6GEYJ223	M.RESISTOR CH 1/10W 22K	2	
R106		ERJ6GEYJ103	M.RESISTOR CH 1/10W 10K	1	
R107		ERJ6GEYJ153	M.RESISTOR CH 1/10W 15K	1	
R108		ERJ6GEYJ681	M.RESISTOR CH 1/10W 680	1	
R109		ERJ6GEYJ470	M.RESISTOR CH 1/10W 47	1	
R110		ERJ6GEYJ102	M.RESISTOR CH 1/10W 1K	1	
R111		ERJ6GEYJ393	M.RESISTOR CH 1/10W 39K	1	
R112		ERJ6GEYJ104	M.RESISTOR CH 1/10W 100K	1	
R113		ERJ6GEYJ102	M.RESISTOR CH 1/10W 1K	1	
R114		ERJ6GEYJ332	M.RESISTOR CH 1/10W 3.3K	1	
R115		ERJ6GEYJ103	M.RESISTOR CH 1/10W 10K	1	
R116		ERJ6GEYJ332	M.RESISTOR CH 1/10W 3.3K	1	
R117		ERJ6GEYJ102	M.RESISTOR CH 1/10W 1K	1	
R118-20		ERJ6GEYJ104	M.RESISTOR CH 1/10W 100K	3	
R121		ERJ6GEYJ102	M.RESISTOR CH 1/10W 1K	1	
R122		ERJ6GEYJ103	M.RESISTOR CH 1/10W 10K	1	
R123		ERJ6GEYJ102	M.RESISTOR CH 1/10W 1K	1	
R124		ERJ6GEYG112	M.RESISTOR CH 1/10W 1.1K	1	
R125		ERJ6GEY0R00	M.RESISTOR CH 1/10W 0	1	
R126		ERJ6GEYJ104	M.RESISTOR CH 1/10W 100K	1	
R127		ERJ6GEYJ102	M.RESISTOR CH 1/10W 1K	1	
R128		ERJ6GEYJ123	M.RESISTOR CH 1/10W 12K	1	
R129		ERJ6GEYJ104	M.RESISTOR CH 1/10W 100K	1	
R130		ERJ6GEYJ103	M.RESISTOR CH 1/10W 10K	1	
R131		ERJ6GEYJ100	M.RESISTOR CH 1/10W 10	1	
R133,34		ERJ6GEYJ223	M.RESISTOR CH 1/10W 22K	2	
R135		ERJ6GEYJ472	M.RESISTOR CH 1/10W 4.7K	1	
R136		ERJ6GEYJ561	M.RESISTOR CH 1/10W 560	1	
R137		ERJ6GEYJ332	M.RESISTOR CH 1/10W 3.3K	1	
R138,39		VRE0034E272	M.RESISTOR CH 1/10W 2.7K	2	
R140		ERJ6GEYJ103	M.RESISTOR CH 1/10W 10K	1	
R141		VRE0034E473	M.RESISTOR CH 1/10W 47K	1	
R142		VRE0034E272	M.RESISTOR CH 1/10W 2.7K	1	
R143		VRE0034E470	M.RESISTOR CH 1/10W 47	1	
R144		VRE0034E104	M.RESISTOR CH 1/10W 100K	1	
R145		ERJ6GEYJ102	M.RESISTOR CH 1/10W 1K	1	
R146		ERJ6GEYJ333	M.RESISTOR CH 1/10W 33K	1	
R147		ERJ6GEYJ103	M.RESISTOR CH 1/10W 10K	1	
R148,49		ERJ6GEYJ102	M.RESISTOR CH 1/10W 1K	2	
R150		ERJ6GEYJ223	M.RESISTOR CH 1/10W 22K	1	
R151		ERJ6GEYJ102	M.RESISTOR CH 1/10W 1K	1	
R152		ERJ6GEYJ103	M.RESISTOR CH 1/10W 10K	1	
R153		ERJ6GEYJ221	M.RESISTOR CH 1/10W 220	1	
R154		ERJ6GEYJ101	M.RESISTOR CH 1/10W 100	1	
R155		ERJ6GEYJ272	M.RESISTOR CH 1/10W 2.7K	1	
R156		ERJ6GEYJ332	M.RESISTOR CH 1/10W 3.3K	1	
R157		VRE0034E102	M.RESISTOR CH 1/10W 1K	1	
R158		VRE0034E332	M.RESISTOR CH 1/10W 3.3K	1	
R159		ERJ6GEYJ221	M.RESISTOR CH 1/10W 220	1	
R160		VRE0034E823	M.RESISTOR CH 1/10W 82K	1	
R161		VRE0034E333	M.RESISTOR CH 1/10W 33K	1	
R162		VRE0034E823	M.RESISTOR CH 1/10W 82K	1	
R163		ERJ6GEYJ104	M.RESISTOR CH 1/10W 100K	1	
R164		VRE0034E683	M.RESISTOR CH 1/10W 68K	1	
R165		VRE0034E222	M.RESISTOR CH 1/10W 2.2K	1	
R166		VRE0034E512	M.RESISTOR CH 1/10W 5.1K	1	
R167		VRE0034E822	M.RESISTOR CH 1/10W 8.2K	1	
R168		VRE0034E203	M.RESISTOR CH 1/10W 20K	1	
R169		VRE0034E821	M.RESISTOR CH 1/10W 820	1	
R201		ERJ6GEYJ104	M.RESISTOR CH 1/10W 100K	1	
R202		ERJ6GEYJ103	M.RESISTOR CH 1/10W 10K	1	
R204		ERJ6GEYJ103	M.RESISTOR CH 1/10W 10K	1	
R205		ERJ6GEYJ332	M.RESISTOR CH 1/10W 3.3K	1	
R206		ERJ6GEYJ183	M.RESISTOR CH 1/10W 18K	1	
R207		ERJ6GEYJ132	M.RESISTOR CH 1/10W 1.3K	1	
R208		ERJ6GEYJ183	M.RESISTOR CH 1/10W 18K	1	
R209		ERJ6GEYJ223	M.RESISTOR CH 1/10W 22K	1	
R210-12		ERJ6GEYJ104	M.RESISTOR CH 1/10W 100K	3	
R213		ERJ6GEYJ223	M.RESISTOR CH 1/10W 22K	1	
R214		ERJ6GEYJ152	M.RESISTOR CH 1/10W 1.5K	1	
R215		ERJ6GEYJ332	M.RESISTOR CH 1/10W 3.3K	1	
R216		ERJ6GEYJ102	M.RESISTOR CH 1/10W 1K	1	
R217		ERJ6GEYJ104	M.RESISTOR CH 1/10W 100K	1	
R218		ERJ6GEYJ103	M.RESISTOR CH 1/10W 10K	1	
R219		ERJ6GEYJ472	M.RESISTOR CH 1/10W 4.7K	1	
R220		ERJ6GEYJ682	M.RESISTOR CH 1/10W 6.8K	1	
R221		ERJ6GEYJ471	M.RESISTOR CH 1/10W 470	1	
R222		ERJ6GEYJ102	M.RESISTOR CH 1/10W 1K	1	
R223		ERJ6GEYJ392	M.RESISTOR CH 1/10W 3.9K	1	
R224,25		ERJ6GEYJ103	M.RESISTOR CH 1/10W 10K	2	
R226		ERJ6GEYJ102	M.RESISTOR CH 1/10W 1K	1	
R227		ERJ6GEYJ183	M.RESISTOR CH 1/10W 18K	1	
R228		ERJ6GEYJ272	M.RESISTOR CH 1/10W 2.7K	1	
R229		ERJ6GEYJ103	M.RESISTOR CH 1/10W 10K	1	
R230		ERJ6GEYJ102	M.RESISTOR CH 1/10W 1K	1	
R231		ERJ6GEYJ103	M.RESISTOR CH 1/10W 10K	1	
R232		ERJ6GEYJ272	M.RESISTOR CH 1/10W 2.7K	1	
R233		ERJ6GEYJ561	M.RESISTOR CH 1/10W 560	1	
R235		ERJ6GEYJ103	M.RESISTOR CH 1/10W 10K	1	
R236		ERJ6GEYJ331	M.RESISTOR CH 1/10W 330	1	
R301,02		ERJ6GEYJ103	M.RESISTOR CH 1/10W 10K	2	

Refer to the P.C.BOARDS LIST, page 6-1-1, before using this page.

Ref.No.		Part No.	Part Name & Description	Pcs	Remarks
R304		ERJ6GEYJ223	M.RESISTOR CH 1/10W 22K	1	
R306		ERJ6GEYJ103	M.RESISTOR CH 1/10W 10K	1	
R307		ERJ6GEYJ153	M.RESISTOR CH 1/10W 15K	1	
R308		ERJ6GEYJ681	M.RESISTOR CH 1/10W 680	1	
R309		ERJ6GEYJ470	M.RESISTOR CH 1/10W 47	1	
R310		ERJ6GEYJ102	M.RESISTOR CH 1/10W 1K	1	
R311		ERJ6GEYJ393	M.RESISTOR CH 1/10W 39K	1	
R312		ERJ6GEYJ104	M.RESISTOR CH 1/10W 100K	1	
R313		ERJ6GEYJ102	M.RESISTOR CH 1/10W 1K	1	
R314		ERJ6GEYJ332	M.RESISTOR CH 1/10W 3.3K	1	
R315		ERJ6GEYJ103	M.RESISTOR CH 1/10W 10K	1	
R316		ERJ6GEYJ332	M.RESISTOR CH 1/10W 3.3K	1	
R317		ERJ6GEYJ102	M.RESISTOR CH 1/10W 1K	1	
R318-20		ERJ6GEYJ104	M.RESISTOR CH 1/10W 100K	3	
R321		ERJ6GEYJ102	M.RESISTOR CH 1/10W 1K	1	
R322		ERJ6GEYJ103	M.RESISTOR CH 1/10W 10K	1	
R323		ERJ6GEYJ102	M.RESISTOR CH 1/10W 1K	1	
R324		ERJ6GEYG112	M.RESISTOR CH 1/10W 1.1K	1	
R325		ERJ6GEY0R00	M.RESISTOR CH 1/10W 0	1	
R326		ERJ6GEYJ104	M.RESISTOR CH 1/10W 100K	1	
R327		ERJ6GEYJ102	M.RESISTOR CH 1/10W 1K	1	
R328		ERJ6GEYJ123	M.RESISTOR CH 1/10W 12K	1	
R329		ERJ6GEYJ104	M.RESISTOR CH 1/10W 100K	1	
R330		ERJ6GEYJ103	M.RESISTOR CH 1/10W 10K	1	
R331		ERJ6GEYJ100	M.RESISTOR CH 1/10W 10	1	
R333,34		ERJ6GEYJ223	M.RESISTOR CH 1/10W 22K	2	
R335		ERJ6GEYJ472	M.RESISTOR CH 1/10W 4.7K	1	
R336		ERJ6GEYJ561	M.RESISTOR CH 1/10W 560	1	
R337		ERJ6GEYJ332	M.RESISTOR CH 1/10W 3.3K	1	
R338,39		VRE0034E272	M.RESISTOR CH 1/10W 2.7K	2	
R340		ERJ6GEYJ103	M.RESISTOR CH 1/10W 10K	1	
R341		VRE0034E473	M.RESISTOR CH 1/10W 47K	1	
R342		VRE0034E272	M.RESISTOR CH 1/10W 2.7K	1	
R343		VRE0034E470	M.RESISTOR CH 1/10W 47	1	
R344		VRE0034E104	M.RESISTOR CH 1/10W 100K	1	
R345		ERJ6GEYJ102	M.RESISTOR CH 1/10W 1K	1	
R346		ERJ6GEYJ333	M.RESISTOR CH 1/10W 33K	1	
R347		ERJ6GEYJ103	M.RESISTOR CH 1/10W 10K	1	
R348,49		ERJ6GEYJ102	M.RESISTOR CH 1/10W 1K	2	
R350		ERJ6GEYJ223	M.RESISTOR CH 1/10W 22K	1	
R351		ERJ6GEYJ102	M.RESISTOR CH 1/10W 1K	1	
R352		ERJ6GEYJ103	M.RESISTOR CH 1/10W 10K	1	
R353		ERJ6GEYJ221	M.RESISTOR CH 1/10W 220	1	
R354		ERJ6GEYJ101	M.RESISTOR CH 1/10W 100	1	
R355		ERJ6GEYJ272	M.RESISTOR CH 1/10W 2.7K	1	
R356		ERJ6GEYJ332	M.RESISTOR CH 1/10W 3.3K	1	
R357		VRE0034E102	M.RESISTOR CH 1/10W 1K	1	
R358		VRE0034E332	M.RESISTOR CH 1/10W 3.3K	1	
R359		ERJ6GEYJ221	M.RESISTOR CH 1/10W 220	1	
R360		VRE0034E823	M.RESISTOR CH 1/10W 82K	1	
R361		VRE0034E333	M.RESISTOR CH 1/10W 33K	1	
R362		VRE0034E823	M.RESISTOR CH 1/10W 82K	1	
R363		ERJ6GEYJ104	M.RESISTOR CH 1/10W 100K	1	
R364		VRE0034E683	M.RESISTOR CH 1/10W 68K	1	
R365		VRE0034E222	M.RESISTOR CH 1/10W 2.2K	1	
R366		VRE0034E512	M.RESISTOR CH 1/10W 5.1K	1	
R367		VRE0034E822	M.RESISTOR CH 1/10W 8.2K	1	
R368		VRE0034E203	M.RESISTOR CH 1/10W 20K	1	
R369		VRE0034E821	M.RESISTOR CH 1/10W 820	1	
R401		ERJ6GEYJ104	M.RESISTOR CH 1/10W 100K	1	
R402-04		ERJ6GEYJ103	M.RESISTOR CH 1/10W 10K	3	
R405		ERJ6GEYJ332	M.RESISTOR CH 1/10W 3.3K	1	
R406		ERJ6GEYJ183	M.RESISTOR CH 1/10W 18K	1	
R407		ERJ6GEYJ132	M.RESISTOR CH 1/10W 1.3K	1	
R408		ERJ6GEYJ183	M.RESISTOR CH 1/10W 18K	1	
R409		ERJ6GEYJ223	M.RESISTOR CH 1/10W 22K	1	
R410-12		ERJ6GEYJ104	M.RESISTOR CH 1/10W 100K	3	
R413		ERJ6GEYJ223	M.RESISTOR CH 1/10W 22K	1	
R414		ERJ6GEYJ152	M.RESISTOR CH 1/10W 1.5K	1	
R415		ERJ6GEYJ332	M.RESISTOR CH 1/10W 3.3K	1	
R416		ERJ6GEYJ102	M.RESISTOR CH 1/10W 1K	1	
R417		ERJ6GEYJ104	M.RESISTOR CH 1/10W 100K	1	
R418		ERJ6GEYJ103	M.RESISTOR CH 1/10W 10K	1	
R419		ERJ6GEYJ472	M.RESISTOR CH 1/10W 4.7K	1	
R420		ERJ6GEYJ682	M.RESISTOR CH 1/10W 6.8K	1	

Ref.No.		Part No.	Part Name & Description	Pcs	Remarks
R421		ERJ6GEYJ471	M.RESISTOR CH 1/10W 470	1	
R422		ERJ6GEYJ102	M.RESISTOR CH 1/10W 1K	1	
R423		ERJ6GEYJ392	M.RESISTOR CH 1/10W 3.9K	1	
R424,25		ERJ6GEYJ103	M.RESISTOR CH 1/10W 10K	2	
R426		ERJ6GEYJ102	M.RESISTOR CH 1/10W 1K	1	
R427		ERJ6GEYJ183	M.RESISTOR CH 1/10W 18K	1	
R428		ERJ6GEYJ272	M.RESISTOR CH 1/10W 2.7K	1	
R429		ERJ6GEYJ103	M.RESISTOR CH 1/10W 10K	1	
R430		ERJ6GEYJ102	M.RESISTOR CH 1/10W 1K	1	
R431		ERJ6GEYJ103	M.RESISTOR CH 1/10W 10K	1	
R432		ERJ6GEYJ272	M.RESISTOR CH 1/10W 2.7K	1	
R433		ERJ6GEYJ561	M.RESISTOR CH 1/10W 560	1	
R435		ERJ6GEYJ103	M.RESISTOR CH 1/10W 10K	1	
R436		ERJ6GEYJ331	M.RESISTOR CH 1/10W 330	1	
R501		ERJ6GEYJ103	M.RESISTOR CH 1/10W 10K	1	
R502,03		ERJ6GEYJ223	M.RESISTOR CH 1/10W 22K	2	
R508		ERJ6GEYJ103	M.RESISTOR CH 1/10W 10K	1	
R509		ERJ6GEYJ223	M.RESISTOR CH 1/10W 22K	1	
R551		ERJ6GEYJ223	M.RESISTOR CH 1/10W 22K	1	
R552		ERJ6GEYJ103	M.RESISTOR CH 1/10W 10K	1	
R553		ERJ6GEYJ102	M.RESISTOR CH 1/10W 1K	1	
R554		ERJ6GEYJ330	M.RESISTOR CH 1/10W 33	1	
R555		ERJ6GEYJ103	M.RESISTOR CH 1/10W 10K	1	
R556		ERJ6GEYJ473	M.RESISTOR CH 1/10W 47K	1	
R557		ERJ6GEYJ330	M.RESISTOR CH 1/10W 33	1	
R558		ERJ6GEYJ103	M.RESISTOR CH 1/10W 10K	1	
R559		ERJ6GEYJ392	M.RESISTOR CH 1/10W 3.9K	1	
R560		ERJ6GEYJ101	M.RESISTOR CH 1/10W 100	1	
R561		ERJ6GEYJ103	M.RESISTOR CH 1/10W 10K	1	
R563		ERJ6GEYJ101	M.RESISTOR CH 1/10W 100	1	
R564		ERJ6GEYJ105	M.RESISTOR CH 1/10W 1M	1	
R565		ERJ6GEYJ104	M.RESISTOR CH 1/10W 100K	1	
R569		ERJ6GEY0R00	M.RESISTOR CH 1/10W 0	1	
R570		ERJ6GEYJ472	M.RESISTOR CH 1/10W 4.7K	1	
R571		ERJ6GEYJ333	M.RESISTOR CH 1/10W 33K	1	
R572,73		ERJ6GEYJ220	M.RESISTOR CH 1/10W 22	2	
R574		ERDS2TJ8R2	C.RESISTOR 1/4W 8.2	1	
R575		ERJ6GEYJ472	M.RESISTOR CH 1/10W 4.7K	1	
R576		ERJ6GEYJ333	M.RESISTOR CH 1/10W 33K	1	
R577,78		ERJ6GEYJ220	M.RESISTOR CH 1/10W 22	2	
R579		ERDS2TJ8R2	C.RESISTOR 1/4W 8.2	1	
R580		ERJ6GEYJ103	M.RESISTOR CH 1/10W 10K	1	
R581		ERJ6GEYJ683	M.RESISTOR CH 1/10W 68K	1	
R582		ERJ6GEYJ103	M.RESISTOR CH 1/10W 10K	1	
R583		ERJ6GEYJ824	M.RESISTOR CH 1/10W 820K	1	
R584,85		ERJ6GEYJ220	M.RESISTOR CH 1/10W 22	2	
R586,87		ERJ6GEYJ273	M.RESISTOR CH 1/10W 27K	2	
R588		ERDS2TJ100	C.RESISTOR 1/4W 10	1	
R589		ERJ6GEYJ103	M.RESISTOR CH 1/10W 10K	1	
R590,91		ERJ6GEYJ222	M.RESISTOR CH 1/10W 2.2K	2	
R592		ERJ6GEYK1R0	M.RESISTOR CH 1/10W 1	1	
R593		ERJ6GEYJ103	M.RESISTOR CH 1/10W 10K	1	
R594		ERJ6GEYJ683	M.RESISTOR CH 1/10W 68K	1	
R595		ERJ6GEYJ103	M.RESISTOR CH 1/10W 10K	1	
R596		ERJ6GEYJ824	M.RESISTOR CH 1/10W 820K	1	
R597,98		ERJ6GEYJ220	M.RESISTOR CH 1/10W 22	2	
R599,00		ERJ6GEYJ273	M.RESISTOR CH 1/10W 27K	2	
R601		ERDS2TJ100	C.RESISTOR 1/4W 10	1	
R602		ERJ6GEYJ103	M.RESISTOR CH 1/10W 10K	1	
R603,04		ERJ6GEYJ222	M.RESISTOR CH 1/10W 2.2K	2	
R605		ERJ6GEYK1R0	M.RESISTOR CH 1/10W 1	1	
R606		ERJ6GEYJ472	M.RESISTOR CH 1/10W 4.7K	1	
R607		ERJ6GEYJ333	M.RESISTOR CH 1/10W 33K	1	
R608,09		ERJ6GEYJ220	M.RESISTOR CH 1/10W 22	2	
R610,11		ERJ6GEYJ224	M.RESISTOR CH 1/10W 220K	2	
R612		ERDS2TJ470	C.RESISTOR 1/4W 47	1	
R613		ERJ6GEYJ103	M.RESISTOR CH 1/10W 10K	1	
R614		ERJ6GEYJ683	M.RESISTOR CH 1/10W 68K	1	
R615		ERJ6GEYJ103	M.RESISTOR CH 1/10W 10K	1	
R616		ERJ6GEYJ824	M.RESISTOR CH 1/10W 820K	1	
R617,18		ERJ6GEYJ220	M.RESISTOR CH 1/10W 22	2	
R619,20		ERJ6GEYJ104	M.RESISTOR CH 1/10W 100K	2	
R621		ERDS2TJ6R8	C.RESISTOR 1/4W 6.8	1	
R622		ERJ6GEYJ103	M.RESISTOR CH 1/10W 10K	1	
R623,24		ERJ6GEYJ222	M.RESISTOR CH 1/10W 2.2K	2	

Refer to the P.C.BOARDS LIST, page 6-1-1, before using this page.

Ref.No.		Part No.	Part Name & Description	Pcs	Remarks
R625		ERJ6GEYK1R0	M.RESISTOR CH 1/10W 1	1	
R626		ERJ6GEYJ184	M.RESISTOR CH 1/10W 180K	1	
R627,28		ERJ6GEYJ103	M.RESISTOR CH 1/10W 10K	2	
R629,30		ERJ6GEYJ220	M.RESISTOR CH 1/10W 22	2	
R631,32		ERJ6GEYJ104	M.RESISTOR CH 1/10W 100K	2	
R633		ERDS2TJ6R8	C.RESISTOR 1/4W 6.8	1	
R634		ERJ6GEYJ103	M.RESISTOR CH 1/10W 10K	1	
R635,36		ERJ6GEYJ222	M.RESISTOR CH 1/10W 2.2K	2	
R637		ERJ6GEYK1R0	M.RESISTOR CH 1/10W 1	1	
R638		ERJ6GEYJ184	M.RESISTOR CH 1/10W 180K	1	
R639,40		ERJ6GEYJ103	M.RESISTOR CH 1/10W 10K	2	
R641,42		ERJ6GEYJ220	M.RESISTOR CH 1/10W 22	2	
R643,44		ERJ6GEYJ104	M.RESISTOR CH 1/10W 100K	2	
R645		ERDS2TJ6R8	C.RESISTOR 1/4W 6.8	1	
R646		ERJ6GEYK1R0	M.RESISTOR CH 1/10W 1	1	
R647-50		ERJ6GEYJ823	M.RESISTOR CH 1/10W 82K	4	
R651,52		ERJ6GEYJ103	M.RESISTOR CH 1/10W 10K	2	
R655,56		ERJ6GEY0R00	M.RESISTOR CH 1/10W 0	2	
R657		ERJ6GEYJ102	M.RESISTOR CH 1/10W 1K	1	
R658		ERJ6GEY0R00	M.RESISTOR CH 1/10W 0	1	
R659		ERJ6GEYJ472	M.RESISTOR CH 1/10W 4.7K	1	
R660,61		ERJ6GEYJ223	M.RESISTOR CH 1/10W 22K	2	
R662,63		ERJ6GEY0R00	M.RESISTOR CH 1/10W 0	2	
R664,65		ERJ6GEYJ392	M.RESISTOR CH 1/10W 3.9K	2	
R666		ERJ6GEYJ332	M.RESISTOR CH 1/10W 3.3K	1	
R667		ERJ6GEYJ473	M.RESISTOR CH 1/10W 47K	1	
R670-73		ERDS2TJ102	C.RESISTOR 1/4W 1K	4	
R701		ERJ6GEYJ104	M.RESISTOR CH 1/10W 100K	1	
R702,03		ERJ6GEYJ332	M.RESISTOR CH 1/10W 3.3K	2	
R704		ERJ6GEYJ102	M.RESISTOR CH 1/10W 1K	1	
R705		ERJ6GEYJ272	M.RESISTOR CH 1/10W 2.7K	1	
R706		ERJ6GEYJ102	M.RESISTOR CH 1/10W 1K	1	
R707,08		ERJ6GEYJ104	M.RESISTOR CH 1/10W 100K	2	
R709		ERJ6GEYJ472	M.RESISTOR CH 1/10W 4.7K	1	
R710		ERJ6GEYJ682	M.RESISTOR CH 1/10W 6.8K	1	
R718		ERJ6GEYJ272	M.RESISTOR CH 1/10W 2.7K	1	
R719,20		ERJ6GEYJ332	M.RESISTOR CH 1/10W 3.3K	2	
R728,29		ERJ6GEYJ821	M.RESISTOR CH 1/10W 820	2	
R730		ERJ6GEYJ681	M.RESISTOR CH 1/10W 680	1	
R731		ERJ6GEY0R00	M.RESISTOR CH 1/10W 0	1	
R732		ERJ6GEYG112	M.RESISTOR CH 1/10W 1.1K	1	
R733		ERJ6GEYJ103	M.RESISTOR CH 1/10W 10K	1	
R734		ERJ6GEYJ183	M.RESISTOR CH 1/10W 18K	1	
R735		ERJ6GEYJ562	M.RESISTOR CH 1/10W 5.6K	1	
R736		ERJ6GEYJ104	M.RESISTOR CH 1/10W 100K	1	
R737,38		ERJ6GEYJ122	M.RESISTOR CH 1/10W 1.2K	2	
R739		VRE0034E362	M.RESISTOR CH 1/10W 3.6K	1	
R740		ERJ6GEYJ122	M.RESISTOR CH 1/10W 1.2K	1	
R741,42		ERJ6GEYJ103	M.RESISTOR CH 1/10W 10K	2	
R743		ERJ6GEYJ473	M.RESISTOR CH 1/10W 47K	1	
R744		ERJ6GEYJ473	M.RESISTOR CH 1/10W 47K	1	
R745		ERJ6GEYJ473	M.RESISTOR CH 1/10W 47K	1	
R801		ERJ6GEYJ104	M.RESISTOR CH 1/10W 100K	1	
R802,03		ERJ6GEYJ332	M.RESISTOR CH 1/10W 3.3K	2	
R804		ERJ6GEYJ102	M.RESISTOR CH 1/10W 1K	1	
R805		ERJ6GEYJ272	M.RESISTOR CH 1/10W 2.7K	1	
R806		ERJ6GEYJ102	M.RESISTOR CH 1/10W 1K	1	
R807,08		ERJ6GEYJ104	M.RESISTOR CH 1/10W 100K	2	
R809		ERJ6GEYJ472	M.RESISTOR CH 1/10W 4.7K	1	
R810		ERJ6GEYJ682	M.RESISTOR CH 1/10W 6.8K	1	
R818		ERJ6GEYJ272	M.RESISTOR CH 1/10W 2.7K	1	
R819,20		ERJ6GEYJ332	M.RESISTOR CH 1/10W 3.3K	2	
R828,29		ERJ6GEYJ821	M.RESISTOR CH 1/10W 820	2	
R830		ERJ6GEYJ681	M.RESISTOR CH 1/10W 680	1	
R831		ERJ6GEY0R00	M.RESISTOR CH 1/10W 0	1	
R832		ERJ6GEYG112	M.RESISTOR CH 1/10W 1.1K	1	
R833		ERJ6GEYJ103	M.RESISTOR CH 1/10W 10K	1	
R834		ERJ6GEYJ183	M.RESISTOR CH 1/10W 18K	1	
R835		ERJ6GEYJ562	M.RESISTOR CH 1/10W 5.6K	1	
R836		ERJ6GEYJ104	M.RESISTOR CH 1/10W 100K	1	
R837,38		ERJ6GEYJ122	M.RESISTOR CH 1/10W 1.2K	2	
R839		VRE0034E362	M.RESISTOR CH 1/10W 3.6K	1	
R840		ERJ6GEYJ122	M.RESISTOR CH 1/10W 1.2K	1	
R841,42		ERJ6GEYJ103	M.RESISTOR CH 1/10W 10K	2	
R843		ERJ6GEYJ473	M.RESISTOR CH 1/10W 47K	1	

Ref.No.		Part No.	Part Name & Description	Pcs	Remarks
R844		ERJ6GEYJ473	M.RESISTOR CH 1/10W 47K	1	
R845		ERJ6GEYJ273	M.RESISTOR CH 1/10W 27K	1	
R901		ERJ6GEYJ223	M.RESISTOR CH 1/10W 22K	1	
R904		ERJ6GEYJ103	M.RESISTOR CH 1/10W 10K	1	
R905		ERJ6GEYJ223	M.RESISTOR CH 1/10W 22K	1	
R906		ERJ6GEYJ102	M.RESISTOR CH 1/10W 1K	1	
R907		ERJ6GEYJ103	M.RESISTOR CH 1/10W 10K	1	
R909		ERJ6GEYJ101	M.RESISTOR CH 1/10W 100	1	
R910		ERJ6GEYJ103	M.RESISTOR CH 1/10W 10K	1	
R914		ERJ6GEYJ104	M.RESISTOR CH 1/10W 100K	1	
R917,18		ERJ6GEYJ561	M.RESISTOR CH 1/10W 560	2	
R919,20		ERJ6GEYJ222	M.RESISTOR CH 1/10W 2.2K	2	
R921		VRE0034E223	M.RESISTOR CH 1/10W 22K	1	
R922,23		ERJ6GEYJ104	M.RESISTOR CH 1/10W 100K	2	
R924		ERJ6GEYJ393	M.RESISTOR CH 1/10W 39K	1	
R925		ERJ6GEYJ123	M.RESISTOR CH 1/10W 12K	1	
R926		ERJ6GEYJ334	M.RESISTOR CH 1/10W 330K	1	
R927		ERJ6GEYJ103	M.RESISTOR CH 1/10W 10K	1	
R928		ERJ6GEYJ104	M.RESISTOR CH 1/10W 100K	1	
R929		ERJ6GEYJ562	M.RESISTOR CH 1/10W 5.6K	1	
R930-32		ERJ6GEYJ102	M.RESISTOR CH 1/10W 1K	3	
R933		ERJ6GEYJ392	M.RESISTOR CH 1/10W 3.9K	1	
R934		ERJ6GEYJ823	M.RESISTOR CH 1/10W 82K	1	
R935		ERJ6GEYJ273	M.RESISTOR CH 1/10W 27K	1	
R936		ERJ6GEYJ392	M.RESISTOR CH 1/10W 3.9K	1	
R937-39		ERJ6GEYJ102	M.RESISTOR CH 1/10W 1K	3	
R940		ERJ6GEYJ560	M.RESISTOR CH 1/10W 56	1	
R941		ERJ6GEYJ392	M.RESISTOR CH 1/10W 3.9K	1	
R942		ERJ6GEYJ102	M.RESISTOR CH 1/10W 1K	1	
R943		ERJ6GEYJ222	M.RESISTOR CH 1/10W 2.2K	1	
R944		ERJ6GEYJ823	M.RESISTOR CH 1/10W 82K	1	
R945		ERJ6GEYJ273	M.RESISTOR CH 1/10W 27K	1	
R946-48		ERJ6GEYJ102	M.RESISTOR CH 1/10W 1K	3	
R949		ERJ6GEYJ390	M.RESISTOR CH 1/10W 39	1	
R950		ERJ6GEYJ392	M.RESISTOR CH 1/10W 3.9K	1	
R951		ERJ6GEYJ102	M.RESISTOR CH 1/10W 1K	1	
R952		ERJ6GEYJ222	M.RESISTOR CH 1/10W 2.2K	1	
R953		ERJ6GEYJ823	M.RESISTOR CH 1/10W 82K	1	
R954		ERJ6GEYJ273	M.RESISTOR CH 1/10W 27K	1	
R955,56		ERJ6GEYJ102	M.RESISTOR CH 1/10W 1K	2	
R957		ERJ6GEYJ222	M.RESISTOR CH 1/10W 2.2K	1	
R958		ERJ6GEYJ823	M.RESISTOR CH 1/10W 82K	1	
R959		ERJ6GEYJ273	M.RESISTOR CH 1/10W 27K	1	
R960		ERJ6GEYJ101	M.RESISTOR CH 1/10W 100	1	
R961		ERJ6GEYJ103	M.RESISTOR CH 1/10W 10K	1	
R962		ERJ6GEYJ102	M.RESISTOR CH 1/10W 1K	1	
R963		ERJ6GEYJ560	M.RESISTOR CH 1/10W 56	1	
R964		ERJ6GEY0R00	M.RESISTOR CH 1/10W 0	1	
R965		ERJ6GEYJ223	M.RESISTOR CH 1/10W 22K	1	
SW101		VSS023703	SWITCH	1	
SW201		VSS023703	SWITCH	1	
SW301		VSS023703	SWITCH	1	
SW401		VSS023703	SWITCH	1	
T551,52		VLT0602	TRANSFORMER	2	
T553,54		VLT0603	TRANSFORMER	2	
T555		VLT0304	TRANSFORMER	1	
T556-58		VLT0603	TRANSFORMER	3	
TP1		VJR0646	TEST POINT	1	
TP101,02		VJR0646	TEST POINT	2	
TP104,05		VJR0646	TEST POINT	2	
TP201		VJR0646	TEST POINT	1	
TP301,02		VJR0646	TEST POINT	2	
TP304,05		VJR0646	TEST POINT	2	
TP401		VJR0646	TEST POINT	1	
TP501		VJR0646	TEST POINT	1	
TP551-58		VJR0646	TEST POINT	8	

Refer to the P.C.BOARDS LIST, page 6-1-1, before using this page.

Ref.No.		Part No.	Part Name & Description	Pcs	Remarks
TP601-09		VJR0646	TEST POINT	9	
TP702-04		VJR0646	TEST POINT	3	
TP802-04		VJR0646	TEST POINT	3	
TP901		VJR0646	TEST POINT	1	
TPG101		VJR0646	TEST POINT	1	
TPG301		VJR0646	TEST POINT	1	
TPG551		VJR0646	TEST POINT	1	
TPG901		VJR0646	TEST POINT	1	
VR101		VRV0109B103	V.RESISTOR 10K	1	
VR103		VRV0109B502	V.RESISTOR 5K	1	
VR201		VRV0109B203	V.RESISTOR 20K	1	
VR202		VRV0064B103	V.RESISTOR 10K	1	
VR203		VRV0109B502	V.RESISTOR 5K	1	
VR205		VRV0109B103	V.RESISTOR 10K	1	
VR206		VRV0109B502	V.RESISTOR 5K	1	
VR301		VRV0109B103	V.RESISTOR 10K	1	
VR303		VRV0109B502	V.RESISTOR 5K	1	
VR402		VRV0064B103	V.RESISTOR 10K	1	
VR403		VRV0109B502	V.RESISTOR 5K	1	
VR405		VRV0109B103	V.RESISTOR 10K	1	
VR406		VRV0109B502	V.RESISTOR 5K	1	
VR551,52		VRV0109B103	V.RESISTOR 10K	2	
VR701		VRV0109B203	V.RESISTOR 20K	1	
VR703		VRV0109B203	V.RESISTOR 20K	1	
VR704		VRV0109B303	V.RESISTOR 30K	1	
VR705		VRV0109B203	V.RESISTOR 20K	1	
VR801		VRV0109B203	V.RESISTOR 20K	1	
VR803-05		VRV0109B203	V.RESISTOR 20K	3	
VR901		VRV0109B502	V.RESISTOR 5K	1	
X551		VSX0246	CRYSTAL OSCILLATOR	1	
			MISCELLANEOUS		
		VJR0421	PIN	3	
		VML2143	CARD PULLER	1	
		VML2144	CARD PULLER	1	
		VMS4174	PIN	6	
		VMZ1547	BARRIER	1	
		VSC3056	SHIELD CASE	1	
		VXA3966	P.C.B. SHIELD PLATE	1	
		XNG26E	NUT	4	
		XYNV3+K6FR	SCREW	6	
		XYN26+C12	SCREW	4	

Ref.No.		Part No.	Part Name & Description	Pcs	Remarks
	■	VEP84095E	P.C.BOARD W/COMPONENT		FOR AU-63-E,B
			W6 AUDIO		AU-62-E,B
			CAPACITORS		
C1,C2		ECEA1CU470	E.CAPACITOR 16V 47U	2	
C3		ECEA0JU101	E.CAPACITOR 6.3V 100U	1	
C5		ECEA1CU100	E.CAPACITOR 16V 10U	1	
C6		ECUM1E473KBN	C.CAPACITOR CH 25V 0.047U	1	
C8		ECUM1E104ZFN	C.CAPACITOR CH 25V 0.1U	1	
C9		ECEA1CU100	E.CAPACITOR 16V 10U	1	
C10		ECEA1CN100S	E.CAPACITOR 16V 10U	1	
C11		ECUM1H272KBN	C.CAPACITOR CH 50V 2700P	1	
C12		ECEA1CU100	E.CAPACITOR 16V 10U	1	
C13,14		ECEA1CU470	E.CAPACITOR 16V 47U	2	
C106		ECUM1H470JCN	C.CAPACITOR CH 50V 47P	1	
C107		ECUM1E104ZFN	C.CAPACITOR CH 25V 0.1U	1	
C108		ECEA1CPZ101	E.CAPACITOR 16V 100U	1	
C109		ECEA1CBZ470	E.CAPACITOR 16V 47U	1	
C110		ECEA1CPZ101	E.CAPACITOR 16V 100U	1	
C111		ECUM1E104ZFN	C.CAPACITOR CH 25V 0.1U	1	
C112,13		ECEA1CPZ101	E.CAPACITOR 16V 100U	2	
C114		ECEA1CBZ100	E.CAPACITOR 16V 10U	1	
C115		ECUM1H220JCN	C.CAPACITOR CH 50V 22P	1	
C116		ECEA1CBZ100	E.CAPACITOR 16V 10U	1	
C118		ECEA1CPZ470	E.CAPACITOR 16V 47U	1	
C120		ECUM1H470JCN	C.CAPACITOR CH 50V 47P	1	
C121		ECUM1H820JCN	C.CAPACITOR CH 50V 82P	1	
C122		ECUM1H151JCN	C.CAPACITOR CH 50V 150P	1	
C124		ECUM1H470JCN	C.CAPACITOR CH 50V 47P	1	
C125		ECEA0JPZ471	E.CAPACITOR 6.3V 470U	1	
C127,28		ECEA1CPZ470	E.CAPACITOR 16V 47U	2	
C129		ECQM1H473JF	P.CAPACITOR 50V 0.047U	1	
C131,32		ECEA1CPZ470	E.CAPACITOR 16V 47U	2	
C133		ECUM1H562KBN	C.CAPACITOR CH 50V 5600P	1	
C134,35		ECEA1CBZ100	E.CAPACITOR 16V 10U	2	
C136		ECQP1H472FZ	P.CAPACITOR 50V 4700P	1	
C137		ECEA1CPZ100	E.CAPACITOR 16V 10U	1	
C138		ECQM1H473JF	P.CAPACITOR 50V 0.047U	1	
C139		ECEA1HPZR22	E.CAPACITOR 50V 0.22U	1	
C140,41		ECEA1HPZR68	E.CAPACITOR 50V 0.98U	2	
C142		ECEA1HPZR22	E.CAPACITOR 50V 0.22U	1	
C143		ECQM1H473JF	P.CAPACITOR 50V 0.047U	1	
C144		ECEA1CPZ100	E.CAPACITOR 16V 10U	1	
C145		ECQP1H472FZ	P.CAPACITOR 50V 4700P	1	
C147		ECQP1H103FZ	P.CAPACITOR 50V 0.01U	1	
C148,49		ECQM1H394JF	P.CAPACITOR 50V 0.39U	2	
C306		ECUM1H470JCN	C.CAPACITOR CH 50V 47P	1	
C307		ECUM1E104ZFN	C.CAPACITOR CH 25V 0.1U	1	
C308		ECEA1CPZ101	E.CAPACITOR 16V 100U	1	
C309		ECEA1CBZ470	E.CAPACITOR 16V 47U	1	
C310		ECEA1CPZ101	E.CAPACITOR 16V 100U	1	
C311		ECUM1E104ZFN	C.CAPACITOR CH 25V 0.1U	1	
C312,13		ECEA1CPZ101	E.CAPACITOR 16V 100U	2	
C314		ECEA1CBZ100	E.CAPACITOR 16V 10U	1	
C315		ECUM1H220JCN	C.CAPACITOR CH 50V 22P	1	
C316		ECEA1CBZ100	E.CAPACITOR 16V 10U	1	
C318		ECEA1CPZ470	E.CAPACITOR 16V 47U	1	
C320		ECUM1H470JCN	C.CAPACITOR CH 50V 47P	1	
C321		ECUM1H820JCN	C.CAPACITOR CH 50V 82P	1	
C322		ECUM1H151JCN	C.CAPACITOR CH 50V 150P	1	
C324		ECUM1H470JCN	C.CAPACITOR CH 50V 47P	1	
C325		ECEA0JPZ471	E.CAPACITOR 6.3V 470U	1	
C327,28		ECEA1CPZ470	E.CAPACITOR 16V 47U	2	
C329		ECQM1H473JF	P.CAPACITOR 50V 0.047U	1	
C331,32		ECEA1CPZ470	E.CAPACITOR 16V 47U	2	
C333		ECUM1H562KBN	C.CAPACITOR CH 50V 5600P	1	
C334,35		ECEA1CBZ100	E.CAPACITOR 16V 10U	2	
C336		ECQP1H472FZ	P.CAPACITOR 50V 4700P	1	
C337		ECEA1CPZ100	E.CAPACITOR 16V 10U	1	
C338		ECQM1H473JF	P.CAPACITOR 50V 0.047U	1	
C339		ECEA1HPZR22	E.CAPACITOR 50V 0.22U	1	
C340,41		ECEA1HPZR68	E.CAPACITOR 50V 0.98U	2	
C342		ECEA1HPZR22	E.CAPACITOR 50V 0.22U	1	
C343		ECQM1H473JF	P.CAPACITOR 50V 0.047U	1	
C344		ECEA1CPZ100	E.CAPACITOR 16V 10U	1	
C345		ECQP1H472FZ	P.CAPACITOR 50V 4700P	1	
C347		ECQP1H103FZ	P.CAPACITOR 50V 0.01U	1	
C348,49		ECQM1H394JF	P.CAPACITOR 50V 0.39U	2	
C501		ECEA1CU101	E.CAPACITOR 16V 100U	1	
C503		ECEA1CU220	E.CAPACITOR 16V 22U	1	
C553		ECEA1AU101	E.CAPACITOR 10V 100U	1	
C701		ECEA1CBZ470	E.CAPACITOR 16V 47U	1	
C702		ECUM1H182KBN	C.CAPACITOR CH 50V 1800P	1	
C703		ECUM1H821JCN	C.CAPACITOR CH 50V 820P	1	
C712		ECEA1HPZ4R7	E.CAPACITOR 50V 4.7U	1	
C713		ECEA1HPZ3R3	E.CAPACITOR 50V 3.3U	1	
C714		ECQM1H682JF	P.CAPACITOR 50V 6800P	1	
C715		ECQM1H102JF	P.CAPACITOR 50V 1000P	1	
C716		ECQM1H223JF	P.CAPACITOR 50V 0.022U	1	
C717		ECEA1CPZ100	E.CAPACITOR 16V 10U	1	
C719		ECEA1HPZ4R7	E.CAPACITOR 50V 4.7U	1	
C720		ECEA1CPZ470	E.CAPACITOR 16V 47U	1	
C721		ECQM1H103JF	P.CAPACITOR 50V 0.01U	1	
C722		ECQM1H332JF	P.CAPACITOR 50V 3300P	1	
C723		ECUM1H272KBN	C.CAPACITOR CH 50V 2700P	1	
C724,25		ECUM1H102KBN	C.CAPACITOR CH 50V 1000P	2	
C726		ECEA1CBZ100	E.CAPACITOR 16V 10U	1	
C727		ECEA1CPZ101	E.CAPACITOR 16V 100U	1	
C728		ECUM1E104ZFN	C.CAPACITOR CH 25V 0.1U	1	
C729,30		ECUM1H103KBN	C.CAPACITOR CH 50V 0.01U	2	
C732		ECQM1H223JF	P.CAPACITOR 50V 0.022U	1	
C733		ECUM1H122KBN	C.CAPACITOR CH 50V 1200P	1	
C801		ECEA1CBZ470	E.CAPACITOR 16V 47U	1	
C802		ECUM1H182KBN	C.CAPACITOR CH 50V 1800P	1	
C803		ECUM1H821JCN	C.CAPACITOR CH 50V 820P	1	
C804,05		ECUM1H222KBN	C.CAPACITOR CH 50V 2200P	2	
C812		ECEA1HPZ4R7	E.CAPACITOR 50V 4.7U	1	
C813		ECEA1HPZ3R3	E.CAPACITOR 50V 3.3U	1	
C814		ECQM1H682JF	P.CAPACITOR 50V 6800P	1	
C815		ECQM1H102JF	P.CAPACITOR 50V 1000P	1	
C816		ECQM1H223JF	P.CAPACITOR 50V 0.022U	1	
C817		ECEA1CPZ100	E.CAPACITOR 16V 10U	1	
C819		ECEA1HPZ4R7	E.CAPACITOR 50V 4.7U	1	
C820		ECEA1CPZ470	E.CAPACITOR 16V 47U	1	
C821		ECQM1H103JF	P.CAPACITOR 50V 0.01U	1	
C822		ECQM1H332JF	P.CAPACITOR 50V 3300P	1	
C823		ECUM1H272KBN	C.CAPACITOR CH 50V 2700P	1	
C824,25		ECUM1H102KBN	C.CAPACITOR CH 50V 1000P	2	
C826		ECEA1CBZ100	E.CAPACITOR 16V 10U	1	
C827		ECEA1CPZ101	E.CAPACITOR 16V 100U	1	
C828		ECUM1E104ZFN	C.CAPACITOR CH 25V 0.1U	1	
C829,30		ECUM1H103KBN	C.CAPACITOR CH 50V 0.01U	2	
C832		ECQM1H223JF	P.CAPACITOR 50V 0.022U	1	
C833		ECUM1H122KBN	C.CAPACITOR CH 50V 1200P	1	
C903		ECUM1E104ZFN	C.CAPACITOR CH 25V 0.1U	1	
C904		ECEA1CPZ101	E.CAPACITOR 16V 100U	1	
C905		ECUM1E104ZFN	C.CAPACITOR CH 25V 0.1U	1	
C906,07		ECEA1CPZ101	E.CAPACITOR 16V 100U	2	
C917		ECEA1CPZ100	E.CAPACITOR 16V 10U	1	
C918		ECUM1E104ZFN	C.CAPACITOR CH 25V 0.1U	1	
C920		ECUM1H151JCN	C.CAPACITOR CH 50V 150P	1	
C921,22		ECUM1H103KBN	C.CAPACITOR CH 50V 0.01U	2	
C923		ECUM1H331JCN	C.CAPACITOR CH 50V 330P	1	
C924		ECEA1HPZ010	E.CAPACITOR 50V 1U	1	
C925		ECQM1H223JF	P.CAPACITOR 50V 0.022U	1	
C926		ECUM1H103KBN	C.CAPACITOR CH 50V 0.01U	1	
C929		ECUM1H151JCN	C.CAPACITOR CH 50V 150P	1	
C930,31		ECUM1H103KBN	C.CAPACITOR CH 50V 0.01U	2	
C932		ECUM1H271JCN	C.CAPACITOR CH 50V 270P	1	
C933		ECUM1H391JCN	C.CAPACITOR CH 50V 390P	1	
C934,35		ECUM1H103KBN	C.CAPACITOR CH 50V 0.01U	2	
C936		ECEA1CU100	E.CAPACITOR 16V 10U	1	
C937		ECUM1E104ZFN	C.CAPACITOR CH 25V 0.1U	1	

Refer to the P.C.BOARDS LIST, page 6-1-1, before using this page.

Ref.No.		Part No.	Part Name & Description	Pcs	Remarks
C938-40		ECEA1CPZ101	E.CAPACITOR 16V 100U	3	
C941		ECEA1HPZ3R3	E.CAPACITOR 50V 3.3U	1	
C942		ECEA1CPZ470	E.CAPACITOR 16V 47U	1	
C944		ECUM1H103KBN	C.CAPACITOR CH 50V 0.01U	1	
C945,46		ECEA1CPZ101	E.CAPACITOR 16V 100U	2	
C947,48		ECEA1HPZ010	E.CAPACITOR 50V 1U	2	
C949		ECUM1E104ZFN	C.CAPACITOR CH 25V 0.1U	1	
C950		ECEA1CPZ101	E.CAPACITOR 16V 100U	1	
D1		MA153	DIODE	1	
D2		MA151K	DIODE	1	
D3,D4		MA3024	DIODE	2	
D7		MA151WK	DIODE	1	
D501		MA153	DIODE	1	
D502		MA151WA	DIODE	1	
D903		MA151K	DIODE	1	
FL101		EIR7QH007Q	FILTER	1	
FL102		VLF0829	FILTER	1	
FL103		ELM7Q306A	COIL	1	
FL301		EIR7QH007Q	FILTER	1	
FL302		VLF0829	FILTER	1	
FL303		ELM7Q306A	COIL	1	
FL901		ELB4L053	FILTER	1	
FL902		ELB4M043	FILTER	1	
IC2,C3		MC14053BF	IC	2	(R)
IC4		NJM4558M	IC	1	
IC5,C6		RC082BM	IC	2	
IC101		AN6558S	IC	1	
IC104		NJM4558M	IC	1	
IC105		TEA0666T	IC	1	
IC106		AN78N09	IC	1	
IC107		AN79N09	IC	1	
IC108		NJM4558M	IC	1	
IC301		AN6558S	IC	1	
IC304		NJM4558M	IC	1	
IC305		TEA0666T	IC	1	
IC306		AN78N09	IC	1	
IC307		AN79N09	IC	1	
IC308		NJM4558M	IC	1	
IC701		NJM4558M	IC	1	
IC703		NJM4558M	IC	1	
IC801		NJM4558M	IC	1	
IC803		NJM4558M	IC	1	
IC805		BA7700K1	IC	1	
IC901		AN78L12	IC	1	
IC902		AN78L05	IC	1	
IC903		AN79L09	IC	1	
IC904		AN78L09	IC	1	
L101,02		VLQEL05F101K	COIL 100UH	2	
L301,02		VLQEL05F101K	COIL 100UH	2	
L552		VLQEL05S471K	COIL 470UH	1	
L906,07		VLQEL05F101K	COIL 100UH	2	
L909		VLQEL05S271J	COIL 270UH	1	
L910-13		VLQEL05F101K	COIL 100UH	4	
P101		VJP1232R	CONNECTOR(MALE) 5P	1	
P301		VJP1232G	CONNECTOR(MALE)	1	
P553		VJP1230T	CONNECTOR(MALE) 3P	1	
Q1		2SD602	TRANSISTOR	1	(Q,R)

Ref.No.		Part No.	Part Name & Description	Pcs	Remarks
Q11		UN2211	TRANSISTOR-RESISTOR	1	
Q12		2SB710	TRANSISTOR	1	
Q14		UN2210	TRANSISTOR-RESISTOR	1	
Q107		2SD1328	TRANSISTOR CHIP	1	(Q,R)
Q108		UN2113	TRANSISTOR-RESISTOR	1	
Q114		2SK146	TRANSISTOR	1	(B,L)
Q115		2SD601	TRANSISTOR CHIP	1	(Q,R)
Q116		2SB709	TRANSISTOR CHIP	1	(Q,R)
Q117		2SD601	TRANSISTOR CHIP	1	(Q,R)
Q118-20		UN2213	TRANSISTOR-RESISTOR	3	
Q307		2SD1328	TRANSISTOR CHIP	1	(Q,R)
Q308		UN2113	TRANSISTOR-RESISTOR	1	
Q314		2SK146	TRANSISTOR	1	(B,L)
Q315		2SD601	TRANSISTOR CHIP	1	(Q,R)
Q316		2SB709	TRANSISTOR CHIP	1	(Q,R)
Q317		2SD601	TRANSISTOR CHIP	1	(Q,R)
Q318-20		UN2213	TRANSISTOR-RESISTOR	3	
Q501		2SB709	TRANSISTOR CHIP	1	(Q,R)
Q502		UN2113	TRANSISTOR-RESISTOR	1	
Q503		UN2213	TRANSISTOR-RESISTOR	1	
Q504		2SD602	TRANSISTOR	1	(Q,R)
Q701		2SD1328	TRANSISTOR CHIP	1	(Q,R)
Q702		2SD601	TRANSISTOR CHIP	1	(Q,R)
Q801		2SD1328	TRANSISTOR CHIP	1	(Q,R)
Q802		2SD601	TRANSISTOR CHIP	1	(Q,R)
Q911		2SD601	TRANSISTOR CHIP	1	(Q,R)
Q912		2SC2404	TRANSISTOR CHIP	1	(B,C)
Q913,14		2SD601	TRANSISTOR CHIP	2	(Q,R)
Q915		2SC2404	TRANSISTOR CHIP	1	(B,C)
Q916,17		2SD601	TRANSISTOR CHIP	2	(Q,R)
Q919		UN2213	TRANSISTOR-RESISTOR	1	
Q920		UN2113	TRANSISTOR-RESISTOR	1	
			RESISTORS		
R1		ERJ6GEYJ102	M.RESISTOR CH 1/10W 1K	1	
R2		ERJ6GEYJ223	M.RESISTOR CH 1/10W 22K	1	
R12		ERJ6GEYJ100	M.RESISTOR CH 1/10W 10	1	
R13		ERJ6GEYJ473	M.RESISTOR CH 1/10W 47K	1	
R14		ERJ6GEYJ102	M.RESISTOR CH 1/10W 1K	1	
R15		ERJ6GEY0R00	M.RESISTOR CH 1/10W 0	1	
R16		ERJ6GEYJ224	M.RESISTOR CH 1/10W 220K	1	
R17		ERJ6GEYJ562	M.RESISTOR CH 1/10W 5.6K	1	
R18		ERJ6GEYJ473	M.RESISTOR CH 1/10W 47K	1	
R19		ERJ6GEYJ331	M.RESISTOR CH 1/10W 330	1	
R20		ERJ6GEYJ473	M.RESISTOR CH 1/10W 47K	1	
R21		ERJ6GEYJ123	M.RESISTOR CH 1/10W 12K	1	
R22		ERJ6GEYJ104	M.RESISTOR CH 1/10W 100K	1	
R23		ERJ6GEYJ102	M.RESISTOR CH 1/10W 1K	1	
R24		ERJ6GEYJ470	M.RESISTOR CH 1/10W 47	1	
R25		ERJ6GEYJ332	M.RESISTOR CH 1/10W 3.3K	1	
R26		ERJ6GEYJ473	M.RESISTOR CH 1/10W 47K	1	
R27		ERJ6GEYJ472	M.RESISTOR CH 1/10W 4.7K	1	
R29		ERJ6GEYJ470	M.RESISTOR CH 1/10W 47	1	
R30		ERJ6GEYJ102	M.RESISTOR CH 1/10W 1K	1	
R39		ERJ6GEYJ104	M.RESISTOR CH 1/10W 100K	1	
R42		ERJ6GEYJ223	M.RESISTOR CH 1/10W 22K	1	
R44		ERJ6GEYJ104	M.RESISTOR CH 1/10W 100K	1	
R48		ERJ6GEYJ104	M.RESISTOR CH 1/10W 100K	1	
R50		ERDS2TJ223	C.RESISTOR 1/4W 22K	1	
R120		ERJ6GEYJ104	M.RESISTOR CH 1/10W 100K	1	
R121		ERJ6GEYJ102	M.RESISTOR CH 1/10W 1K	1	
R122		ERJ6GEYJ103	M.RESISTOR CH 1/10W 10K	1	
R123		ERJ6GEYJ102	M.RESISTOR CH 1/10W 1K	1	
R124		ERJ6GEYG112	M.RESISTOR CH 1/10W 1.1K	1	
R125		ERJ6GEY0R00	M.RESISTOR CH 1/10W 0	1	
R126		ERJ6GEYJ104	M.RESISTOR CH 1/10W 100K	1	
R127		ERJ6GEYJ102	M.RESISTOR CH 1/10W 1K	1	
R128		ERJ6GEYJ123	M.RESISTOR CH 1/10W 12K	1	
R129		ERJ6GEYJ104	M.RESISTOR CH 1/10W 100K	1	
R131		ERJ6GEYJ100	M.RESISTOR CH 1/10W 10	1	
R138,39		VRE0034E272	M.RESISTOR CH 1/10W 2.7K	2	
R140		ERJ6GEYJ103	M.RESISTOR CH 1/10W 10K	1	
R141		VRE0034E473	M.RESISTOR CH 1/10W 47K	1	

Refer to the P.C.BOARDS LIST, page 6-1-1, before using this page.

Ref.No.		Part No.	Part Name & Description	Pcs	Remarks
R142		VRE0034E272	M.RESISTOR CH 1/10W 2.7K	1	
R143		VRE0034E470	M.RESISTOR CH 1/10W 47	1	
R144		VRE0034E104	M.RESISTOR CH 1/10W 100K	1	
R145		ERJ6GEYJ102	M.RESISTOR CH 1/10W 1K	1	
R147		ERJ6GEYJ103	M.RESISTOR CH 1/10W 10K	1	
R148,49		ERJ6GEYJ102	M.RESISTOR CH 1/10W 1K	2	
R150		ERJ6GEYJ223	M.RESISTOR CH 1/10W 22K	1	
R151		ERJ6GEYJ102	M.RESISTOR CH 1/10W 1K	1	
R152		ERJ6GEYJ103	M.RESISTOR CH 1/10W 10K	1	
R153		ERJ6GEYJ221	M.RESISTOR CH 1/10W 220	1	
R154		ERJ6GEYJ101	M.RESISTOR CH 1/10W 100	1	
R155		ERJ6GEYJ272	M.RESISTOR CH 1/10W 2.7K	1	
R156		ERJ6GEYJ332	M.RESISTOR CH 1/10W 3.3K	1	
R157		VRE0034E102	M.RESISTOR CH 1/10W 1K	1	
R158		VRE0034E332	M.RESISTOR CH 1/10W 3.3K	1	
R159		ERJ6GEYJ221	M.RESISTOR CH 1/10W 220	1	
R160		VRE0034E823	M.RESISTOR CH 1/10W 82K	1	
R161		VRE0034E333	M.RESISTOR CH 1/10W 33K	1	
R162		VRE0034E823	M.RESISTOR CH 1/10W 82K	1	
R164		VRE0034E683	M.RESISTOR CH 1/10W 68K	1	
R165		VRE0034E222	M.RESISTOR CH 1/10W 2.2K	1	
R166		VRE0034E512	M.RESISTOR CH 1/10W 5.1K	1	
R167		VRE0034E822	M.RESISTOR CH 1/10W 8.2K	1	
R168		VRE0034E203	M.RESISTOR CH 1/10W 20K	1	
R169		VRE0034E821	M.RESISTOR CH 1/10W 820	1	
R320		ERJ6GEYJ104	M.RESISTOR CH 1/10W 100K	1	
R321		ERJ6GEYJ102	M.RESISTOR CH 1/10W 1K	1	
R322		ERJ6GEYJ103	M.RESISTOR CH 1/10W 10K	1	
R323		ERJ6GEYJ102	M.RESISTOR CH 1/10W 1K	1	
R324		ERJ6GEYG112	M.RESISTOR CH 1/10W 1.1K	1	
R325		ERJ6GEY0R00	M.RESISTOR CH 1/10W 0	1	
R326		ERJ6GEYJ104	M.RESISTOR CH 1/10W 100K	1	
R327		ERJ6GEYJ102	M.RESISTOR CH 1/10W 1K	1	
R328		ERJ6GEYJ123	M.RESISTOR CH 1/10W 12K	1	
R329		ERJ6GEYJ104	M.RESISTOR CH 1/10W 100K	1	
R331		ERJ6GEYJ100	M.RESISTOR CH 1/10W 10	1	
R338,39		VRE0034E272	M.RESISTOR CH 1/10W 2.7K	2	
R340		ERJ6GEYJ103	M.RESISTOR CH 1/10W 10K	1	
R341		VRE0034E473	M.RESISTOR CH 1/10W 47K	1	
R342		VRE0034E272	M.RESISTOR CH 1/10W 2.7K	1	
R343		VRE0034E470	M.RESISTOR CH 1/10W 47	1	
R344		VRE0034E104	M.RESISTOR CH 1/10W 100K	1	
R345		ERJ6GEYJ102	M.RESISTOR CH 1/10W 1K	1	
R347		ERJ6GEYJ103	M.RESISTOR CH 1/10W 10K	1	
R348,49		ERJ6GEYJ102	M.RESISTOR CH 1/10W 1K	2	
R350		ERJ6GEYJ223	M.RESISTOR CH 1/10W 22K	1	
R351		ERJ6GEYJ102	M.RESISTOR CH 1/10W 1K	1	
R352		ERJ6GEYJ103	M.RESISTOR CH 1/10W 10K	1	
R353		ERJ6GEYJ221	M.RESISTOR CH 1/10W 220	1	
R354		ERJ6GEYJ101	M.RESISTOR CH 1/10W 100	1	
R355		ERJ6GEYJ272	M.RESISTOR CH 1/10W 2.7K	1	
R356		ERJ6GEYJ332	M.RESISTOR CH 1/10W 3.3K	1	
R357		VRE0034E102	M.RESISTOR CH 1/10W 1K	1	
R358		VRE0034E332	M.RESISTOR CH 1/10W 3.3K	1	
R359		ERJ6GEYJ221	M.RESISTOR CH 1/10W 220	1	
R360		VRE0034E823	M.RESISTOR CH 1/10W 82K	1	
R361		VRE0034E333	M.RESISTOR CH 1/10W 33K	1	
R362		VRE0034E823	M.RESISTOR CH 1/10W 82K	1	
R364		VRE0034E683	M.RESISTOR CH 1/10W 68K	1	
R365		VRE0034E222	M.RESISTOR CH 1/10W 2.2K	1	
R366		VRE0034E512	M.RESISTOR CH 1/10W 5.1K	1	
R367		VRE0034E822	M.RESISTOR CH 1/10W 8.2K	1	
R368		VRE0034E203	M.RESISTOR CH 1/10W 20K	1	
R369		VRE0034E821	M.RESISTOR CH 1/10W 820	1	
R501		ERJ6GEYJ103	M.RESISTOR CH 1/10W 10K	1	
R502,03		ERJ6GEYJ223	M.RESISTOR CH 1/10W 22K	2	
R508		ERJ6GEYJ103	M.RESISTOR CH 1/10W 10K	1	
R509		ERJ6GEYJ223	M.RESISTOR CH 1/10W 22K	1	
R510		ERJ6GEYJ273	M.RESISTOR CH 1/10W 27K	1	
R511		ERJ6GEYJ103	M.RESISTOR CH 1/10W 10K	1	
R701		ERJ6GEYJ104	M.RESISTOR CH 1/10W 100K	1	
R702,03		ERJ6GEYJ332	M.RESISTOR CH 1/10W 3.3K	2	
R704		ERJ6GEYJ102	M.RESISTOR CH 1/10W 1K	1	
R705		ERJ6GEYJ272	M.RESISTOR CH 1/10W 2.7K	1	
R706		ERJ6GEYJ102	M.RESISTOR CH 1/10W 1K	1	

Ref.No.		Part No.	Part Name & Description	Pcs	Remarks
R707		ERJ6GEYJ104	M.RESISTOR CH 1/10W 100K	1	
R709		ERJ6GEYJ472	M.RESISTOR CH 1/10W 4.7K	1	
R710		ERJ6GEYJ682	M.RESISTOR CH 1/10W 6.8K	1	
R728,29		ERJ6GEYJ821	M.RESISTOR CH 1/10W 820	2	
R730		ERJ6GEYJ681	M.RESISTOR CH 1/10W 680	1	
R731		ERJ6GEY0R00	M.RESISTOR CH 1/10W 0	1	
R732		ERJ6GEYG112	M.RESISTOR CH 1/10W 1.1K	1	
R733		ERJ6GEYJ103	M.RESISTOR CH 1/10W 10K	1	
R734		ERJ6GEYJ183	M.RESISTOR CH 1/10W 18K	1	
R735		ERJ6GEYJ562	M.RESISTOR CH 1/10W 5.6K	1	
R736		ERJ6GEYJ104	M.RESISTOR CH 1/10W 100K	1	
R737,38		ERJ6GEYJ122	M.RESISTOR CH 1/10W 1.2K	2	
R739		VRE0034E362	M.RESISTOR CH 1/10W 3.6K	1	
R740		ERJ6GEYJ122	M.RESISTOR CH 1/10W 1.2K	1	
R741,42		ERJ6GEYJ103	M.RESISTOR CH 1/10W 10K	2	
R743		ERJ6GEYJ473	M.RESISTOR CH 1/10W 47K	1	
R743		ERJ6GEYJ561	M.RESISTOR CH 1/10W 560	1	
R744		ERJ6GEYJ473	M.RESISTOR CH 1/10W 47K	1	
R744		ERJ6GEYJ561	M.RESISTOR CH 1/10W 560	1	
R745		ERJ6GEYJ473	M.RESISTOR CH 1/10W 47K	1	
R801		ERJ6GEYJ104	M.RESISTOR CH 1/10W 100K	1	
R802,03		ERJ6GEYJ332	M.RESISTOR CH 1/10W 3.3K	2	
R804		ERJ6GEYJ102	M.RESISTOR CH 1/10W 1K	1	
R805		ERJ6GEYJ272	M.RESISTOR CH 1/10W 2.7K	1	
R806		ERJ6GEYJ102	M.RESISTOR CH 1/10W 1K	1	
R807		ERJ6GEYJ104	M.RESISTOR CH 1/10W 100K	1	
R809		ERJ6GEYJ472	M.RESISTOR CH 1/10W 4.7K	1	
R810		ERJ6GEYJ682	M.RESISTOR CH 1/10W 6.8K	1	
R828,29		ERJ6GEYJ821	M.RESISTOR CH 1/10W 820	2	
R830		ERJ6GEYJ681	M.RESISTOR CH 1/10W 680	1	
R831		ERJ6GEY0R00	M.RESISTOR CH 1/10W 0	1	
R832		ERJ6GEYG112	M.RESISTOR CH 1/10W 1.1K	1	
R833		ERJ6GEYJ103	M.RESISTOR CH 1/10W 10K	1	
R834		ERJ6GEYJ183	M.RESISTOR CH 1/10W 18K	1	
R835		ERJ6GEYJ562	M.RESISTOR CH 1/10W 5.6K	1	
R836		ERJ6GEYJ104	M.RESISTOR CH 1/10W 100K	1	
R837,38		ERJ6GEYJ122	M.RESISTOR CH 1/10W 1.2K	2	
R839		VRE0034E362	M.RESISTOR CH 1/10W 3.6K	1	
R840		ERJ6GEYJ122	M.RESISTOR CH 1/10W 1.2K	1	
R841,42		ERJ6GEYJ103	M.RESISTOR CH 1/10W 10K	2	
R843		ERJ6GEYJ473	M.RESISTOR CH 1/10W 47K	1	
R843		ERJ6GEYJ561	M.RESISTOR CH 1/10W 560	1	
R844		ERJ6GEYJ473	M.RESISTOR CH 1/10W 47K	1	
R844		ERJ6GEYJ561	M.RESISTOR CH 1/10W 560	1	
R845		ERJ6GEYJ273	M.RESISTOR CH 1/10W 27K	1	
R914		ERJ6GEYJ104	M.RESISTOR CH 1/10W 100K	1	
R917,18		ERJ6GEYJ561	M.RESISTOR CH 1/10W 560	2	
R919,20		ERJ6GEYJ222	M.RESISTOR CH 1/10W 2.2K	2	
R921		VRE0034E223	M.RESISTOR CH 1/10W 22K	1	
R922,23		ERJ6GEYJ104	M.RESISTOR CH 1/10W 100K	2	
R924		ERJ6GEYJ393	M.RESISTOR CH 1/10W 39K	1	
R925		ERJ6GEYJ123	M.RESISTOR CH 1/10W 12K	1	
R926		ERJ6GEYJ334	M.RESISTOR CH 1/10W 330K	1	
R927		ERJ6GEYJ103	M.RESISTOR CH 1/10W 10K	1	
R928		ERJ6GEYJ104	M.RESISTOR CH 1/10W 100K	1	
R939		ERJ6GEYJ102	M.RESISTOR CH 1/10W 1K	1	
R940		ERJ6GEYJ560	M.RESISTOR CH 1/10W 56	1	
R941		ERJ6GEYJ392	M.RESISTOR CH 1/10W 3.9K	1	
R942		ERJ6GEYJ102	M.RESISTOR CH 1/10W 1K	1	
R943		ERJ6GEYJ222	M.RESISTOR CH 1/10W 2.2K	1	
R944		ERJ6GEYJ823	M.RESISTOR CH 1/10W 82K	1	
R945		ERJ6GEYJ273	M.RESISTOR CH 1/10W 27K	1	
R946-48		ERJ6GEYJ102	M.RESISTOR CH 1/10W 1K	3	
R949		ERJ6GEYJ390	M.RESISTOR CH 1/10W 39	1	
R950		ERJ6GEYJ392	M.RESISTOR CH 1/10W 3.9K	1	
R951		ERJ6GEYJ102	M.RESISTOR CH 1/10W 1K	1	
R952		ERJ6GEYJ222	M.RESISTOR CH 1/10W 2.2K	1	
R953		ERJ6GEYJ823	M.RESISTOR CH 1/10W 82K	1	
R954		ERJ6GEYJ273	M.RESISTOR CH 1/10W 27K	1	
R955,56		ERJ6GEYJ102	M.RESISTOR CH 1/10W 1K	2	
R957		ERJ6GEYJ222	M.RESISTOR CH 1/10W 2.2K	1	
R958		ERJ6GEYJ823	M.RESISTOR CH 1/10W 82K	1	
R959		ERJ6GEYJ273	M.RESISTOR CH 1/10W 27K	1	
R960		ERJ6GEYJ101	M.RESISTOR CH 1/10W 100	1	
R961		ERJ6GEYJ103	M.RESISTOR CH 1/10W 10K	1	

Refer to the P.C.BOARDS LIST, page 6-1-1, before using this page.

Ref.No.		Part No.	Part Name & Description	Pcs	Remarks
R963		ERJ6GEYJ560	M.RESISTOR CH 1/10W 56	1	
SW101		VSS023703	SWITCH	1	
SW301		VSS023703	SWITCH	1	
TP1		VJR0646	TEST POINT	1	
TP101		VJR0646	TEST POINT	1	
TP301		VJR0646	TEST POINT	1	
TP501		VJR0646	TEST POINT	1	
TP702-04		VJR0646	TEST POINT	3	
TP802-04		VJR0646	TEST POINT	3	
TP901-03		VJR0646	TEST POINT	3	
TPG101		VJR0646	TEST POINT	1	
TPG301		VJR0646	TEST POINT	1	
TPG901		VJR0646	TEST POINT	1	
VR103		VRV0109B502	V.RESISTOR 5K	1	
VR303		VRV0109B502	V.RESISTOR 5K	1	
VR703		VRV0109B203	V.RESISTOR 20K	1	
VR704		VRV0109B303	V.RESISTOR 30K	1	
VR705		VRV0109B203	V.RESISTOR 20K	1	
VR803-05		VRV0109B203	V.RESISTOR 20K	3	
			MISCELLANEOUS		
		VML2143	CARD PULLER	1	
		VML2144	CARD PULLER	1	
		VMS4174	PIN	6	
		VMZ1547	BARRIER	1	
		VSC3056	SHIELD CASE	1	
		VXA3966	P.C.B. SHIELD PLATE	1	
		XNG26E	NUT	4	
		XYNV3+K6FR	SCREW	6	
		XYN26+C12	SCREW	4	

Refer to the P.C.BOARDS LIST, page 6-1-1, before using this page.

Ref.No.		Part No.	Part Name & Description	Pcs	Remarks
	■	VEP80549A	P.C.BOARD W/COMPONENT		FOR AU-65-P,E,B
			BO MOTHER 2		AU-62-P,E,B
B1L		VJS2899A096	CONNECTOR (FEMALE)	1	
B2L		VJS2899A096	CONNECTOR (FEMALE)	1	
B1R		VJS2899A096	CONNECTOR (FEMALE)	1	
			CAPACITORS		
C1		ECEA0JU221	E.CAPACITOR 6.3V 220U	1	
C2		ECQB1H473JF	P.CAPACITOR 50V 0.047U	1	
CN50		VJP2893A064	CONNECTOR(MALE)	1	
CN51		VJP1247T	CONNECTOR(MALE) 7P	1	
CN52		VJP1233T	CONNECTOR(MALE) 6P	1	
CN53		VJP2856A026	CONNECTOR(MALE)	1	
CN54		VJP1394T	CONNECTOR(MALE)	1	
CN55		VJP1931T	CONNECTOR(MALE)	1	
CN56		VJP1929T	CONNECTOR(MALE)	1	
CN57		VJP1393T	CONNECTOR(MALE) 13P	1	
CN58		VJP1248T	CONNECTOR(MALE) 8P	1	
CN59		VJP1930T	CONNECTOR	1	
CN610		VJP1243T	CONNECTOR(MALE) 3P	1	
P10		VJP1709	CONNECTOR(MALE)	1	
			MISCELLANEOUS		
		VMP2599	P.C.B. HOLDER ANGLE	1	
		XNG26E	NUT	6	
		XTV3+6F	SCREW	5	
		XYN26+C8	SCREW	6	

Refer to the P.C.BOARDS LIST, page 6-1-1, before using this page.

Ref.No.		Part No.	Part Name & Description	Pcs	Remarks
	■	VEP80549B	P.C.BOARD W/COMPONENT		FOR AU-63-P,E,B
			BO MOTHER 2		
B1L		VJS2899A096	CONNECTOR (FEMALE)	1	
B2L		VJS2899A096	CONNECTOR (FEMALE)	1	
B1R		VJS2899A096	CONNECTOR (FEMALE)	1	
			CAPACITORS		
C1		ECEA0JU221	E.CAPACITOR 6.3V 220U	1	
C2		ECQB1H473JF	P.CAPACITOR 50V 0.047U	1	
CN50		VJP2893A064	CONNECTOR (MALE)	1	
CN51		VJP1247T	CONNECTOR(MALE) 7P	1	
CN52		VJP1233T	CONNECTOR(MALE) 6P	1	
CN53		VJP2856A026	CONNECTOR (MALE)	1	
CN54		VJP1394T	CONNECTOR(MALE)	1	
CN55		VJP1931T	CONNECTOR (MALE)	1	
CN56		VJP1929T	CONNECTOR (MALE)	1	
CN57		VJP1393T	CONNECTOR(MALE) 13P	1	
CN58		VJP1248T	CONNECTOR(MALE) 8P	1	
CN59		VJP1930T	CONNECTOR	1	
CN60		VJP1246T	CONNECTOR(MALE) 6P	1	
CN610		VJP1243T	CONNECTOR(MALE) 3P	1	
P10		VJP1709	CONNECTOR (MALE)	1	
			MISCELLANEOUS		
		VMP2599	P.C.B. HOLDER ANGLE	1	
		XNG26E	NUT	6	
		XTV3+6F	SCREW	5	
		XYN26+C8	SCREW	6	

Refer to the P.C.BOARDS LIST, page 6-1-1, before using this page.

Ref.No.		Part No.	Part Name & Description	Pcs	Remarks
	■	VEP86088A	P.C.BOARD W/COMPONENT		FOR AU-65-P
			B1 SYSTEM CONTROL		
B1L		VJP2899B096	CONNECTOR (MALE)	1	
B1R		VJP2899B096	CONNECTOR (MALE)	1	
			CAPACITORS		
C1,C2		ECUM1H331JCN	C.CAPACITOR CH 50V 330P	2	
C3-C5		ECUM1H102JCN	C.CAPACITOR CH 50V 1000P	3	
C6-C9		ECUM1H103ZFN	C.CAPACITOR CH 50V 0.01U	4	
C10		ECEA0JU221	E.CAPACITOR 6.3V 220U	1	
C11		ECEA0JU101	E.CAPACITOR 6.3V 100U	1	
C12,13		ECUM1E104ZFN	C.CAPACITOR CH 25V 0.1U	2	
C14,15		ECUM1H270JCN	C.CAPACITOR CH 50V 27P	2	
C16-18		ECUM1H103ZFN	C.CAPACITOR CH 50V 0.01U	3	
C19		ECEA1HU3R3	E.CAPACITOR 50V 3.3U	1	
C20		ECQM1H104JF	P.CAPACITOR 50V 0.1U	1	
C21-23		ECUM1H103ZFN	C.CAPACITOR CH 50V 0.01U	3	
C25		ECEA0JU471	E.CAPACITOR 6.3V 470U	1	
C26,27		ECUM1H680JCN	C.CAPACITOR CH 50V 68P	2	
C28-33		ECUM1H103ZFN	C.CAPACITOR CH 50V 0.01U	6	
C34		ECUM1E104ZFN	C.CAPACITOR CH 25V 0.1U	1	
C35,36		ECUM1H103ZFN	C.CAPACITOR CH 50V 0.01U	2	
C37		ECEA1CU100	E.CAPACITOR 16V 10U	1	
C38-41		ECUM1E104ZFN	C.CAPACITOR CH 25V 0.1U	4	
C42-47		ECUM1H103ZFN	C.CAPACITOR CH 50V 0.01U	6	
C50		ECUM1H103ZFN	C.CAPACITOR CH 50V 0.01U	1	
C51		ECEA1CU100	E.CAPACITOR 16V 10U	1	
C52		ECUM1E104ZFN	C.CAPACITOR CH 25V 0.1U	1	
C53		ECUM1H103ZFN	C.CAPACITOR CH 50V 0.01U	1	
C75-82		ECUM1H103ZFN	C.CAPACITOR CH 50V 0.01U	8	
C83,84		ECEA1HU010	E.CAPACITOR 50V 1U	2	
C85		ECEA1CN100S	E.CAPACITOR 16V 10U	1	
C86		ECUM1H101JCN	C.CAPACITOR CH 50V 100P	1	
C87		ECUM1H103ZFN	C.CAPACITOR CH 50V 0.01U	1	
C88		ECEA1CN100S	E.CAPACITOR 16V 10U	1	
C89		ECUM1H101JCN	C.CAPACITOR CH 50V 100P	1	
C90		ECUM1H103ZFN	C.CAPACITOR CH 50V 0.01U	1	
C91		ECEA1HU010	E.CAPACITOR 50V 1U	1	
C92		ECUM1H103ZFN	C.CAPACITOR CH 50V 0.01U	1	
C93		ECQP1H392JZ	P.CAPACITOR 50V 3900P	1	
C94		ECEA1HU010	E.CAPACITOR 50V 1U	1	
C95		ECUM1H103ZFN	C.CAPACITOR CH 50V 0.01U	1	
C96-99		ECUM1E104ZFN	C.CAPACITOR CH 25V 0.1U	4	
C100,01		ECUM1E104ZFN	C.CAPACITOR CH 25V 0.1U	2	
C102-06		ECUM1H103ZFN	C.CAPACITOR CH 50V 0.01U	5	
C107		ECUM1E104ZFN	C.CAPACITOR CH 25V 0.1U	1	
C108-14		ECUM1H103ZFN	C.CAPACITOR CH 50V 0.01U	7	
C115		ECUM1E104ZFN	C.CAPACITOR CH 25V 0.1U	1	
C116-19		ECUM1H103ZFN	C.CAPACITOR CH 50V 0.01U	4	
C120		ECEA1HU010	E.CAPACITOR 50V 1U	1	
C121-23		ECUM1H103ZFN	C.CAPACITOR CH 50V 0.01U	3	
C124		ECUM1H150JCN	C.CAPACITOR CH 50V 15P	1	
C125		ECUM1H270JCN	C.CAPACITOR CH 50V 27P	1	
C127-38		ECUM1H103ZFN	C.CAPACITOR CH 50V 0.01U	12	
C140		ECUM1H103ZFN	C.CAPACITOR CH 50V 0.01U	1	
C141		ECEA1HU2R2	E.CAPACITOR 50V 2.2U	1	
C142		ECQM1H154JF	P.CAPACITOR 50V 0.15U	1	
C143		ECQM1H104JF	P.CAPACITOR 50V 0.1U	1	
C147,48		ECUM1H103ZFN	C.CAPACITOR CH 50V 0.01U	2	
C151		ECUM1H103ZFN	C.CAPACITOR CH 50V 0.01U	1	
C154		ECUM1H102JCN	C.CAPACITOR CH 50V 1000P	1	
C500-02		ECEA1EU4R7	E.CAPACITOR 25V 4.7U	3	
C503-05		ECEA1HN2R2S	E.CAPACITOR 50V 2.2U	3	
C506-08		ECEA1EU101	E.CAPACITOR 25V 100U	3	

Ref.No.		Part No.	Part Name & Description	Pcs	Remarks
D1		MA151WA	DIODE	1	
D2		MA153	DIODE	1	
D3		MA151K	DIODE	1	
D4,D5		MA151WA	DIODE	2	
D6-D9		MA151K	DIODE	4	
D10-13		MA151K	DIODE	4	
D15		MA151K	DIODE	1	
D16		MA151WK	DIODE	1	
D17		MA151WA	DIODE	1	
D18,19		MA151K	DIODE	2	
D20		MA151WK	DIODE	1	
D500		MA151K	DIODE	1	
D501-06		10E1	DIODE	6	
D507,08		MA151K	DIODE	2	
D509		10E1	DIODE	1	
D510		MA151WK	DIODE	1	
D511		MA3039H	DIODE	1	
D512		MA3075H	DIODE	1	
D513		MA3051H	DIODE	1	
D514		MA3056H	DIODE	1	
D515		MA3100M	DIODE	1	
IC1		MC14024BF	IC	1	
IC2		MC34051M	IC	1	
IC3		TMPZ84C43AF6	IC	1	
IC4		UPD71054GB	IC	1	
IC5		HD64180ZF8	IC	1	
IC6		TL7705CPSB	IC	1	
IC7		VSI0634E	IC	1	
IC8,C9		MC74HC541F	IC	2	
IC10		MBM221220	IC	1	
IC11		VSI0234	IC	1	
IC13		MC74HC4538F	IC	1	
IC14		MC74HC541F	IC	1	
IC15		MC74HC245AF	IC	1	
IC16,17		MC74HC138AF	IC	2	
IC18		MB89363BPF	IC	1	
IC19,20		MC14094BF	IC	2	
IC21		MB89363BPF	IC	1	
IC24		MC14013BF	IC	1	
IC25,26		MC14027BF	IC	2	
IC27-29		MC14538BF	IC	3	
IC30		MB621176PF	IC	1	
IC31		MB89363BPF	IC	1	
IC32,33		MC14021BF	IC	2	
IC34		MC14094BF	IC	1	
IC35		MB89363BPF	IC	1	
IC36-41		MC14021BF	IC	6	
IC42		MB89363BPF	IC	1	
IC43,44		MC14094BF	IC	2	
IC45		MC14021BF	IC	1	
IC46		M50455-001SP	IC	1	
IC47,48		MC14050BF	IC	2	
IC49		SN74LS38NS	IC	1	
IC50,51		MC74HC132F	IC	2	
IC52		MC74HC04AF	IC	1	
IC53,54		MC14049UBF	IC	2	
IC55		MC74HC00AF	IC	1	
IC56		N74F32D	IC	1	
IC57		MN4030BS	IC	1	
IC58		MC74HC541F	IC	1	
IC59		LM2903M	IC	1	
IC60,61		NJM2901M	IC	2	
IC62		MC74HC00AF	IC	1	
IC63		MC74HC138AF	IC	1	
IC64,65		MC14021BF	IC	2	
IC66,67		MC14094BF	IC	2	
IC68		MB89363BPF	IC	1	
IC69		TC74HC190F	IC	1	
IC71		MC14538BF	IC	1	
IC72		MC74HC86F	IC	1	

Refer to the P.C.BOARDS LIST, page 6-1-1, before using this page.

Ref.No.		Part No.	Part Name & Description	Pcs	Remarks
IC75		MN4030BS	IC	1	
IC500		PU3124	IC	1	
IC501		PU4124	IC	1	
IC502,03		BA6238AU2M	IC	2	
IC7S		VJS2336A032	CONNECTOR (FEMALE)	1	
IC10S		VJS2336A018	CONNECTOR (FEMALE)	1	
L1		VLP0017	COIL	1	
L2		VLQEL05S150J	COIL 15UH	1	
Q1		2SB710	TRANSISTOR	1	(Q,R)
Q2		DTC144EK	TRANSISTOR-RESISTOR	1	
Q3,Q4		DTC114YK	TRANSISTOR-RESISTOR	2	
Q5		UN2214	TRANSISTOR-RESISTOR	1	
Q15		2SB710	TRANSISTOR	1	(Q,R)
Q16		2SD602	TRANSISTOR	1	(Q,R)
Q17-22		DTC144EK	TRANSISTOR-RESISTOR	6	
Q25-47		DTC144EK	TRANSISTOR-RESISTOR	23	
Q48		2SD946A	TRANSISTOR	1	
Q49		DTC144EK	TRANSISTOR-RESISTOR	1	
Q500,01		UN2213	TRANSISTOR-RESISTOR	2	
Q502,03		2SB709	TRANSISTOR CHIP	2	(Q,R)
Q504		UN2213	TRANSISTOR-RESISTOR	1	
Q505,06		2SB709	TRANSISTOR CHIP	2	(Q,R)
Q507		UN2213	TRANSISTOR-RESISTOR	1	
Q508,09		2SB709	TRANSISTOR CHIP	2	(Q,R)
Q510-14		UN2213	TRANSISTOR-RESISTOR	5	
Q515		2SB709	TRANSISTOR CHIP	1	(Q,R)
			RESISTORS		
R1		ERJ6GEYJ223	M.RESISTOR CH 1/10W 22K	1	
R2		ERJ6GEYJ103	M.RESISTOR CH 1/10W 10K	1	
R3		ERJ6GEYJ223	M.RESISTOR CH 1/10W 22K	1	
R4		ERJ6GEYJ103	M.RESISTOR CH 1/10W 10K	1	
R5		ERJ6GEYJ562	M.RESISTOR CH 1/10W 5.6K	1	
R6		ERJ6GEYJ103	M.RESISTOR CH 1/10W 10K	1	
R7-R9		ERJ6GEYJ681	M.RESISTOR CH 1/10W 680	3	
R10		ERJ6GEYJ473	M.RESISTOR CH 1/10W 47K	1	
R11		ERJ6GEYJ152	M.RESISTOR CH 1/10W 1.5K	1	
R12		ERJ6GEYJ101	M.RESISTOR CH 1/10W 100	1	
R13,14		ERJ6GEYJ152	M.RESISTOR CH 1/10W 1.5K	2	
R15		ERJ6GEYJ101	M.RESISTOR CH 1/10W 100	1	
R16		ERJ6GEYJ152	M.RESISTOR CH 1/10W 1.5K	1	
R17		ERJ6GEYJ473	M.RESISTOR CH 1/10W 47K	1	
R18		ERJ6GEYJ472	M.RESISTOR CH 1/10W 4.7K	1	
R19-22		ERJ6GEYJ473	M.RESISTOR CH 1/10W 47K	4	
R23-31		ERJ6GEYJ103	M.RESISTOR CH 1/10W 10K	9	
R32		ERJ6GEYJ472	M.RESISTOR CH 1/10W 4.7K	1	
R33		ERJ6GEYJ102	M.RESISTOR CH 1/10W 1K	1	
R34		ERJ6GEYJ103	M.RESISTOR CH 1/10W 10K	1	
R35		ERJ6GEYJ473	M.RESISTOR CH 1/10W 47K	1	
R36		ERJ6GEYJ103	M.RESISTOR CH 1/10W 10K	1	
R37-47		ERJ6GEYJ473	M.RESISTOR CH 1/10W 47K	11	
R48		ERJ6GEYJ474	M.RESISTOR CH 1/10W 470K	1	
R49		ERJ6GEYJ103	M.RESISTOR CH 1/10W 10K	1	
R50		ERJ6GEYJ223	M.RESISTOR CH 1/10W 22K	1	
R51,52		ERJ6GEYJ473	M.RESISTOR CH 1/10W 47K	2	
R53		ERJ6GEYJ223	M.RESISTOR CH 1/10W 22K	1	
R54-72		ERJ6GEYJ103	M.RESISTOR CH 1/10W 10K	19	
R73-77		ERJ6GEYJ473	M.RESISTOR CH 1/10W 47K	5	
R79		ERJ6GEYJ473	M.RESISTOR CH 1/10W 47K	1	
R81-85		ERJ6GEYJ473	M.RESISTOR CH 1/10W 47K	5	
R86,87		ERJ6GEYJ223	M.RESISTOR CH 1/10W 22K	2	
R88		ERJ6GEYJ473	M.RESISTOR CH 1/10W 47K	1	
R93-96		ERJ6GEYJ473	M.RESISTOR CH 1/10W 47K	4	
R97		ERJ6GEYJ101	M.RESISTOR CH 1/10W 100	1	
R100		ERJ6GEYJ101	M.RESISTOR CH 1/10W 100	1	
R101		ERJ6GEYJ473	M.RESISTOR CH 1/10W 47K	1	
R102,03		ERJ6GEYJ101	M.RESISTOR CH 1/10W 100	2	

Ref.No.		Part No.	Part Name & Description	Pcs	Remarks
R104		ERJ6GEYJ223	M.RESISTOR CH 1/10W 22K	1	
R105		ERJ6GEYJ103	M.RESISTOR CH 1/10W 10K	1	
R106		ERJ6GEYJ474	M.RESISTOR CH 1/10W 470K	1	
R107-22		ERJ6GEYJ103	M.RESISTOR CH 1/10W 10K	16	
R123-25		ERJ6GEYJ101	M.RESISTOR CH 1/10W 100	3	
R126,27		ERJ6GEYJ562	M.RESISTOR CH 1/10W 5.6K	2	
R128		ERJ6GEYJ472	M.RESISTOR CH 1/10W 4.7K	1	
R129		ERJ6GEYJ223	M.RESISTOR CH 1/10W 22K	1	
R130-32		ERJ6GEYJ473	M.RESISTOR CH 1/10W 47K	3	
R133,34		ERJ6GEYJ562	M.RESISTOR CH 1/10W 5.6K	2	
R136		ERJ6GEYJ223	M.RESISTOR CH 1/10W 22K	1	
R137-43		ERJ6GEYJ473	M.RESISTOR CH 1/10W 47K	7	
R144		ERJ6GEYJ332	M.RESISTOR CH 1/10W 3.3K	1	
R145		ERJ6GEYJ101	M.RESISTOR CH 1/10W 100	1	
R146		ERJ6GEYJ223	M.RESISTOR CH 1/10W 22K	1	
R147		ERJ6GEYJ332	M.RESISTOR CH 1/10W 3.3K	1	
R148		ERJ6GEYJ101	M.RESISTOR CH 1/10W 100	1	
R149		ERJ6GEYJ102	M.RESISTOR CH 1/10W 1K	1	
R150		ERJ6GEYJ332	M.RESISTOR CH 1/10W 3.3K	1	
R151		ERJ6GEYJ101	M.RESISTOR CH 1/10W 100	1	
R152		ERJ6GEYJ223	M.RESISTOR CH 1/10W 22K	1	
R153		ERJ6GEYJ332	M.RESISTOR CH 1/10W 3.3K	1	
R154		ERJ6GEYJ101	M.RESISTOR CH 1/10W 100	1	
R155		ERJ6GEYJ102	M.RESISTOR CH 1/10W 1K	1	
R156,57		ERJ6GEYJ104	M.RESISTOR CH 1/10W 100K	2	
R158		ERJ6GEYJ332	M.RESISTOR CH 1/10W 3.3K	1	
R159		ERJ6GEYJ103	M.RESISTOR CH 1/10W 10K	1	
R160,61		ERJ6GEYJ102	M.RESISTOR CH 1/10W 1K	2	
R162		ERJ6GEYJ332	M.RESISTOR CH 1/10W 3.3K	1	
R163		ERJ6GEYJ103	M.RESISTOR CH 1/10W 10K	1	
R164		ERJ6GEYJ105	M.RESISTOR CH 1/10W 1M	1	
R165		ERJ6GEYJ223	M.RESISTOR CH 1/10W 22K	1	
R166		ERJ6GEYJ105	M.RESISTOR CH 1/10W 1M	1	
R167		ERJ6GEYJ223	M.RESISTOR CH 1/10W 22K	1	
R168,69		ERJ6GEYJ103	M.RESISTOR CH 1/10W 10K	2	
R170		ERJ6GEYJ104	M.RESISTOR CH 1/10W 100K	1	
R171		VRE0034E623	M.RESISTOR CH 1/10W 62K	1	
R172		ERJ6GEYJ104	M.RESISTOR CH 1/10W 100K	1	
R173-83		ERJ6GEYJ103	M.RESISTOR CH 1/10W 10K	11	
R184-86		ERJ6GEYJ473	M.RESISTOR CH 1/10W 47K	3	
R187-91		ERJ6GEYJ103	M.RESISTOR CH 1/10W 10K	5	
R192,93		ERJ6GEYJ101	M.RESISTOR CH 1/10W 100	2	
R194-01		ERJ6GEYJ103	M.RESISTOR CH 1/10W 10K	8	
R202		ERJ6GEYJ473	M.RESISTOR CH 1/10W 47K	1	
R203-06		ERJ6GEYJ103	M.RESISTOR CH 1/10W 10K	4	
R207,08		ERJ6GEYJ223	M.RESISTOR CH 1/10W 22K	2	
R209,10		ERJ6GEYJ122	M.RESISTOR CH1/10W 1.2K	2	
R211		ERJ6GEYJ101	M.RESISTOR CH 1/10W 100	1	
R212		ERJ6GEYJ474	M.RESISTOR CH 1/10W 470K	1	
R213		ERJ6GEYJ103	M.RESISTOR CH 1/10W 10K	1	
R214		ERJ6GEYJ223	M.RESISTOR CH 1/10W 22K	1	
R215		ERJ6GEYJ473	M.RESISTOR CH 1/10W 47K	1	
R216,17		ERJ6GEYJ223	M.RESISTOR CH 1/10W 22K	2	
R218,19		ERJ6GEYJ101	M.RESISTOR CH 1/10W 100	2	
R220		ERJ6GEYJ223	M.RESISTOR CH 1/10W 22K	1	
R221		ERJ6GEYJ101	M.RESISTOR CH 1/10W 100	1	
R222		ERJ6GEYJ474	M.RESISTOR CH 1/10W 470K	1	
R223		ERJ6GEYJ103	M.RESISTOR CH 1/10W 10K	1	
R224		ERJ6GEYJ223	M.RESISTOR CH 1/10W 22K	1	
R225		ERJ6GEYJ102	M.RESISTOR CH 1/10W 1K	1	
R226		ERJ6GEYJ473	M.RESISTOR CH 1/10W 47K	1	
R227		ERJ6GEYJ103	M.RESISTOR CH 1/10W 10K	1	
R228		ERJ6GEYJ223	M.RESISTOR CH 1/10W 22K	1	
R229		ERJ6GEYJ473	M.RESISTOR CH 1/10W 47K	1	
R230		ERJ6GEYJ103	M.RESISTOR CH 1/10W 10K	1	
R231		ERJ6GEYJ101	M.RESISTOR CH 1/10W 100	1	
R232		ERJ6GEYJ223	M.RESISTOR CH 1/10W 22K	1	
R233,34		ERJ6GEYJ473	M.RESISTOR CH 1/10W 47K	2	
R235		ERJ6GEYJ223	M.RESISTOR CH 1/10W 22K	1	
R236-39		ERJ6GEYJ473	M.RESISTOR CH 1/10W 47K	4	
R240		ERJ6GEYJ103	M.RESISTOR CH 1/10W 10K	1	
R241-45		ERJ6GEYJ473	M.RESISTOR CH 1/10W 47K	5	
R247		ERJ6GEYJ103	M.RESISTOR CH 1/10W 10K	1	
R248,49		ERJ6GEYJ102	M.RESISTOR CH 1/10W 1K	2	
R250		ERJ6GEYJ223	M.RESISTOR CH 1/10W 22K	1	

Refer to the P.C.BOARDS LIST, page 6-1-1, before using this page.

Ref.No.		Part No.	Part Name & Description	Pcs	Remarks
R251		ERJ6GEYJ123	M.RESISTOR CH1/10W 12K	1	
R252		ERJ6GEYJ103	M.RESISTOR CH 1/10W 10K	1	
R253		ERJ6GEYJ393	M.RESISTOR CH 1/10W 39K	1	
R254		ERJ6GEYJ223	M.RESISTOR CH 1/10W 22K	1	
R255		ERJ6GEYJ562	M.RESISTOR CH 1/10W 5.6K	1	
R256		ERJ6GEYJ223	M.RESISTOR CH 1/10W 22K	1	
R257		ERJ6GEYJ473	M.RESISTOR CH 1/10W 47K	1	
R258		ERJ6GEYJ103	M.RESISTOR CH 1/10W 10K	1	
R259,60		ERJ6GEYJ223	M.RESISTOR CH 1/10W 22K	2	
R261		ERJ6GEYJ183	M.RESISTOR CH 1/10W 18K	1	
R262		ERJ6GEYJ103	M.RESISTOR CH 1/10W 10K	1	
R263		ERJ6GEYJ333	M.RESISTOR CH 1/10W 33K	1	
R264,65		ERJ6GEYJ473	M.RESISTOR CH 1/10W 47K	2	
R266,67		ERJ6GEYJ101	M.RESISTOR CH 1/10W 100	2	
R269		ERJ6GEYJ103	M.RESISTOR CH 1/10W 10K	1	
R270		ERJ6GEYJ101	M.RESISTOR CH 1/10W 100	1	
R272-77		ERJ6GEYJ103	M.RESISTOR CH 1/10W 10K	6	
R278-85		ERJ6GEYJ473	M.RESISTOR CH 1/10W 47K	8	
R286		ERJ6GEYJ103	M.RESISTOR CH 1/10W 10K	1	
R287		ERJ6GEYJ223	M.RESISTOR CH 1/10W 22K	1	
R288,89		ERJ6GEYJ103	M.RESISTOR CH 1/10W 10K	2	
R290		ERJ6GEYJ473	M.RESISTOR CH 1/10W 47K	1	
R294		ERJ6GEYJ103	M.RESISTOR CH 1/10W 10K	1	
R295		ERJ6GEYJ564	M.RESISTOR CH 1/10W 560K	1	
R296		ERJ6GEYJ473	M.RESISTOR CH 1/10W 47K	1	
R301		ERJ6GEYJ563	M.RESISTOR CH 1/10W 56K	1	
R302,03		ERJ6GEYJ333	M.RESISTOR CH 1/10W 33K	2	
R304		ERJ6GEYJ473	M.RESISTOR CH 1/10W 47K	1	
R502		ERJ6GEYJ122	M.RESISTOR CH1/10W 1.2K	1	
R504		ERJ6GEYJ222	M.RESISTOR CH 1/10W 2.2K	1	
R505		ERJ6GEYJ223	M.RESISTOR CH 1/10W 22K	1	
R506		ERJ6GEYJ103	M.RESISTOR CH 1/10W 10K	1	
R507		ERJ6GEYJ102	M.RESISTOR CH 1/10W 1K	1	
R508		ERJ6GEYJ104	M.RESISTOR CH 1/10W 100K	1	
R509		ERJ6GEYJ103	M.RESISTOR CH 1/10W 10K	1	
R510		ERJ6GEYJ223	M.RESISTOR CH 1/10W 22K	1	
R511		ERJ6GEYJ102	M.RESISTOR CH 1/10W 1K	1	
R512		ERJ6GEYJ104	M.RESISTOR CH 1/10W 100K	1	
R513		ERJ6GEYJ222	M.RESISTOR CH 1/10W 2.2K	1	
R514		ERJ6GEYJ223	M.RESISTOR CH 1/10W 22K	1	
R515		ERJ6GEYJ103	M.RESISTOR CH 1/10W 10K	1	
R516		ERJ6GEYJ102	M.RESISTOR CH 1/10W 1K	1	
R517		ERJ6GEYJ104	M.RESISTOR CH 1/10W 100K	1	
R518		ERJ6GEYJ223	M.RESISTOR CH 1/10W 22K	1	
R519		ERJ6GEYJ103	M.RESISTOR CH 1/10W 10K	1	
R520		ERJ6GEYJ102	M.RESISTOR CH 1/10W 1K	1	
R521		ERJ6GEYJ104	M.RESISTOR CH 1/10W 100K	1	
R522		ERJ6GEYJ222	M.RESISTOR CH 1/10W 2.2K	1	
R523		ERJ6GEYJ223	M.RESISTOR CH 1/10W 22K	1	
R524		ERJ6GEYJ103	M.RESISTOR CH 1/10W 10K	1	
R525		ERJ6GEYJ102	M.RESISTOR CH 1/10W 1K	1	
R526		ERJ6GEYJ104	M.RESISTOR CH 1/10W 100K	1	
R527		ERJ6GEYJ223	M.RESISTOR CH 1/10W 22K	1	
R528		ERJ6GEYJ103	M.RESISTOR CH 1/10W 10K	1	
R529		ERJ6GEYJ102	M.RESISTOR CH 1/10W 1K	1	
R530		ERJ6GEYJ104	M.RESISTOR CH 1/10W 100K	1	
R531,32		ERX1SJ1R0	M.RESISTOR 1W 1.0	2	
R533		ERJ6GEYJ104	M.RESISTOR CH 1/10W 100K	1	
R536		ERJ6GEYJ562	M.RESISTOR CH 1/10W 5.6K	1	
R537		ERJ6GEYJ222	M.RESISTOR CH 1/10W 2.2K	1	
R538		ERJ6GEYJ103	M.RESISTOR CH 1/10W 10K	1	
R539		ERJ6GEYJ223	M.RESISTOR CH 1/10W 22K	1	
R540		ERJ6GEYJ102	M.RESISTOR CH 1/10W 1K	1	
R541		ERJ6GEYJ104	M.RESISTOR CH 1/10W 100K	1	
R542		ERJ6GEYJ272	M.RESISTOR CH 1/10W 2.7K	1	
R543		ERJ6GEYJ271	M.RESISTOR CH 1/10W 270	1	
SW1,W2		VSS0223	SWITCH	2	
SW3		VSR0045	SWITCH	1	
SW4-W6		EVQQEJ06K	SWITCH	3	
SW7		VST0096	SWITCH	1	

Ref.No.		Part No.	Part Name & Description	Pcs	Remarks
TP17-19		VJR0582	PACK PIN	3	
TPG1,G2		VJR0582	PACK PIN	2	
VC1		ECV1ZW20X60	V.CAPACITOR 20P	1	
X1		VSX0373	CRYSTAL OSCILLATOR	1	
			MISCELLANEOUS		
		VML2143	CARD PULLER	1	
		VML2144	CARD PULLER	1	
		VMS4174	PIN	4	
		VMZ1548	BARRIER	1	
		VSC3057	SHIELD CASE	1	
		VSC3058	SHIELD CASE	1	
		VSC3059	SHIELD CASE	1	
		VXA3967	P.C.B. SHIELD PLATE	1	
		XNG26E	NUT	4	
		XNG3ES	NUT	2	
		XSN3+6S	SCREW	2	
		XYNV3+K6FR	SCREW	4	
		XYN26+C10	SCREW	1	

Refer to the P.C.BOARDS LIST, page 6-1-1, before using this page.

Ref.No.		Part No.	Part Name & Description	Pcs	Remarks
	■	VEP86088C	P.C.BOARD W/COMPONENT		FOR AU-62-P
			B1 SYSTEM CONTROL		
B1L		VJP2899B096	CONNECTOR(MALE)	1	
B1R		VJP2899B096	CONNECTOR(MALE)	1	
			CAPACITORS		
C1,C2		ECUM1H331JCN	C.CAPACITOR CH 50V 330P	2	
C3-C5		ECUM1H102JCN	C.CAPACITOR CH 50V 1000P	3	
C6-C9		ECUM1H103ZFN	C.CAPACITOR CH 50V 0.01U	4	
C10		ECEA0JU221	E.CAPACITOR 6.3V 220U	1	
C11		ECEA0JU101	E.CAPACITOR 6.3V 100U	1	
C12,13		ECUM1E104ZFN	C.CAPACITOR CH 25V 0.1U	2	
C14,15		ECUM1H270JCN	C.CAPACITOR CH 50V 27P	2	
C16-18		ECUM1H103ZFN	C.CAPACITOR CH 50V 0.01U	3	
C19		ECEA1HU3R3	E.CAPACITOR 50V 3.3U	1	
C20		ECQM1H104JF	P.CAPACITOR 50V 0.1U	1	
C21-23		ECUM1H103ZFN	C.CAPACITOR CH 50V 0.01U	3	
C25		ECEA0JU471	E.CAPACITOR 6.3V 470U	1	
C26,27		ECUM1H680JCN	C.CAPACITOR CH 50V 68P	2	
C28-33		ECUM1H103ZFN	C.CAPACITOR CH 50V 0.01U	6	
C34		ECUM1E104ZFN	C.CAPACITOR CH 25V 0.1U	1	
C35,36		ECUM1H103ZFN	C.CAPACITOR CH 50V 0.01U	2	
C37		ECEA1CU100	E.CAPACITOR 16V 10U	1	
C38-41		ECUM1E104ZFN	C.CAPACITOR CH 25V 0.1U	4	
C42-47		ECUM1H103ZFN	C.CAPACITOR CH 50V 0.01U	6	
C50		ECUM1H103ZFN	C.CAPACITOR CH 50V 0.01U	1	
C51		ECEA1CU100	E.CAPACITOR 16V 10U	1	
C52		ECUM1E104ZFN	C.CAPACITOR CH 25V 0.1U	1	
C53		ECUM1H103ZFN	C.CAPACITOR CH 50V 0.01U	1	
C75-82		ECUM1H103ZFN	C.CAPACITOR CH 50V 0.01U	8	
C83,84		ECEA1HU010	E.CAPACITOR 50V 1U	2	
C85		ECEA1CN100S	E.CAPACITOR 16V 10U	1	
C86		ECUM1H101JCN	C.CAPACITOR CH 50V 100P	1	
C87		ECUM1H103ZFN	C.CAPACITOR CH 50V 0.01U	1	
C88		ECEA1CN100S	E.CAPACITOR 16V 10U	1	
C89		ECUM1H101JCN	C.CAPACITOR CH 50V 100P	1	
C90		ECUM1H103ZFN	C.CAPACITOR CH 50V 0.01U	1	
C91		ECEA1HU010	E.CAPACITOR 50V 1U	1	
C92		ECUM1H103ZFN	C.CAPACITOR CH 50V 0.01U	1	
C93		ECQP1H392JZ	P.CAPACITOR 50V 3900P	1	
C94		ECEA1HU010	E.CAPACITOR 50V 1U	1	
C95		ECUM1H103ZFN	C.CAPACITOR CH 50V 0.01U	1	
C96-99		ECUM1E104ZFN	C.CAPACITOR CH 25V 0.1U	4	
C100,01		ECUM1E104ZFN	C.CAPACITOR CH 25V 0.1U	2	
C105,06		ECUM1H103ZFN	C.CAPACITOR CH 50V 0.01U	2	
C107		ECUM1E104ZFN	C.CAPACITOR CH 25V 0.1U	1	
C108-14		ECUM1H103ZFN	C.CAPACITOR CH 50V 0.01U	7	
C115		ECUM1E104ZFN	C.CAPACITOR CH 25V 0.1U	1	
C116-19		ECUM1H103ZFN	C.CAPACITOR CH 50V 0.01U	4	
C120		ECEA1HU010	E.CAPACITOR 50V 1U	1	
C121-23		ECUM1H103ZFN	C.CAPACITOR CH 50V 0.01U	3	
C124		ECUM1H150JCN	C.CAPACITOR CH 50V 15P	1	
C125		ECUM1H270JCN	C.CAPACITOR CH 50V 27P	1	
C127-38		ECUM1H103ZFN	C.CAPACITOR CH 50V 0.01U	12	
C140		ECUM1H103ZFN	C.CAPACITOR CH 50V 0.01U	1	
C141		ECEA1HU2R2	E.CAPACITOR 50V 2.2U	1	
C142		ECQM1H154JF	P.CAPACITOR 50V 0.15U	1	
C143		ECQM1H104JF	P.CAPACITOR 50V 0.1U	1	
C147,48		ECUM1H103ZFN	C.CAPACITOR CH 50V 0.01U	2	
C151		ECUM1H103ZFN	C.CAPACITOR CH 50V 0.01U	1	
C154		ECUM1H102JCN	C.CAPACITOR CH 50V 1000P	1	
C155		ECKF1H102KB	C.CAPACITOR 50V 1000P	1	
C500-02		ECEA1EU4R7	E.CAPACITOR 25V 4.7U	3	
C503-05		ECEA1HN2R2S	E.CAPACITOR 50V 2.2U	3	
C506-08		ECEA1EU101	E.CAPACITOR 25V 100U	3	

Ref.No.		Part No.	Part Name & Description	Pcs	Remarks
D1		MA151WA	DIODE	1	
D2		MA153	DIODE	1	
D3		MA151K	DIODE	1	
D4,D5		MA151WA	DIODE	2	
D7-D9		MA151K	DIODE	3	
D10-13		MA151K	DIODE	4	
D15		MA151K	DIODE	1	
D16		MA151WK	DIODE	1	
D17		MA151WA	DIODE	1	
D18,19		MA151K	DIODE	2	
D20		MA151WK	DIODE	1	
D500		MA151K	DIODE	1	
D501-06		10E1	DIODE	6	
D507,08		MA151K	DIODE	2	
D509		10E1	DIODE	1	
D510		MA151WK	DIODE	1	
D511		MA3039-H	DIODE	1	
D512		MA3075H	DIODE	1	
D513		MA3051-H	DIODE	1	
D514		MA3056-H	DIODE	1	
D515		MA3100-M	DIODE	1	
IC1		MC14024BF	IC	1	
IC2		MC34051M	IC	1	
IC3		TMPZ84C43AF6	IC	1	
IC4		UPD71054GB	IC	1	
IC5		HD64180ZF8	IC	1	
IC6		TL7705CPSB	IC	1	
IC7		VSI0683B	IC	1	
IC8,C9		MC74HC541F	IC	2	
IC10		MBM221220	IC	1	
IC11		VSI0234	IC	1	
IC13		MC74HC4538F	IC	1	
IC14		MC74HC541F	IC	1	
IC15		MC74HC245AF	IC	1	
IC16,17		MC74HC138AF	IC	2	
IC18		MB89363BPF	IC	1	
IC19,20		MC14094BF	IC	2	
IC21		MB89363BPF	IC	1	
IC24		MC14013BF	IC	1	
IC25,26		MC14027BF	IC	2	
IC27-29		MC14538BF	IC	3	
IC30		MB621176PF	IC	1	
IC31		MB89363BPF	IC	1	
IC34		MC14094BF	IC	1	
IC35		MB89363BPF	IC	1	
IC36-41		MC14021BF	IC	6	
IC42		MB89363BPF	IC	1	
IC43,44		MC14094BF	IC	2	
IC45		MC14021BF	IC	1	
IC46		M50455-001SP	IC	1	
IC47,48		MC14050BF	IC	2	
IC49		SN74LS38NS	IC	1	
IC50,51		MC74HC132F	IC	2	
IC52		MC74HC04AF	IC	1	
IC53,54		MC14049UBF	IC	2	
IC55		MC74HC00AF	IC	1	
IC56		M74F32FP	IC	1	
IC57		MN4030BS	IC	1	
IC58		MC74HC541F	IC	1	
IC59		LM2903M	IC	1	
IC60,61		NJM2901M	IC	2	
IC62		MC74HC00AF	IC	1	
IC63		MC74HC138AF	IC	1	
IC64,65		MC14021BF	IC	2	
IC66,67		MC14094BF	IC	2	
IC68		MB89363BPF	IC	1	
IC69		TC74HC190AF	IC	1	
IC71		MC14538BF	IC	1	
IC72		MC74HC86F	IC	1	

Ref.No.		Part No.	Part Name & Description	Pcs	Remarks
IC75		MN4030BS	IC	1	
IC500		PU3124	IC	1	
IC501		PU4124	IC	1	
IC502,03		BA6238AU2M	IC	2	
IC7S		VJS2336A032	CONNECTOR (FEMALE)	1	
IC10S		VJS2336A018	CONNECTOR (FEMALE)	1	
L1		VLP0017	COIL	1	
L2		VLQEL05S150J	COIL 15UH	1	
Q1		2SB710-R	TRANSISTOR	1	(Q,R)
Q2		DTC144EK	TRANSISTOR-RESISTOR	1	
Q3,Q4		DTC114YK	TRANSISTOR-RESISTOR	2	
Q5		UN2214	TRANSISTOR-RESISTOR	1	
Q9		UN2214	TRANSISTOR-RESISTOR	1	
Q15		2SB710-R	TRANSISTOR	1	(Q,R)
Q16		2SD602-R	TRANSISTOR	1	(Q,R)
Q17-22		DTC144EK	TRANSISTOR-RESISTOR	6	
Q25-27		DTC144EK	TRANSISTOR-RESISTOR	3	
Q29-35		DTC144EK	TRANSISTOR-RESISTOR	7	
Q38-42		DTC144EK	TRANSISTOR-RESISTOR	5	
Q44		DTC144EK	TRANSISTOR-RESISTOR	1	
Q46,47		DTC144EK	TRANSISTOR-RESISTOR	2	
Q48		2SD946A	TRANSISTOR	1	
Q500,01		UN2213	TRANSISTOR-RESISTOR	2	
Q502,03		2SB709-R	TRANSISTOR CHIP	2	(Q,R)
Q504		UN2213	TRANSISTOR-RESISTOR	1	
Q505,06		2SB709-R	TRANSISTOR CHIP	2	(Q,R)
Q507		UN2213	TRANSISTOR-RESISTOR	1	
Q508,09		2SB709-R	TRANSISTOR CHIP	2	(Q,R)
Q510-14		UN2213	TRANSISTOR-RESISTOR	5	
Q515		2SB709-R	TRANSISTOR CHIP	1	(Q,R)
			RESISTORS		
R1		ERJ6GEYJ223	M.RESISTOR CH 1/10W 22K	1	
R2		ERJ6GEY0R00	M.RESISTOR CH 1/10W 0	1	
R3		ERJ6GEYJ223	M.RESISTOR CH 1/10W 22K	1	
R4		ERJ6GEY0R00	M.RESISTOR CH 1/10W 0	1	
R5		ERJ6GEYJ562	M.RESISTOR CH 1/10W 5.6K	1	
R6		ERJ6GEYJ103	M.RESISTOR CH 1/10W 10K	1	
R7-R9		ERJ6GEYJ681	M.RESISTOR CH 1/10W 680	3	
R10		ERJ6GEYJ473	M.RESISTOR CH 1/10W 47K	1	
R11		ERJ6GEYJ152	M.RESISTOR CH 1/10W 1.5K	1	
R12		ERJ6GEYJ101	M.RESISTOR CH 1/10W 100	1	
R13,14		ERJ6GEYJ152	M.RESISTOR CH 1/10W 1.5K	2	
R15		ERJ6GEYJ101	M.RESISTOR CH 1/10W 100	1	
R16		ERJ6GEYJ152	M.RESISTOR CH 1/10W 1.5K	1	
R17		ERJ6GEYJ473	M.RESISTOR CH 1/10W 47K	1	
R18		ERJ6GEYJ472	M.RESISTOR CH 1/10W 4.7K	1	
R19-22		ERJ6GEYJ473	M.RESISTOR CH 1/10W 47K	4	
R23-31		ERJ6GEYJ103	M.RESISTOR CH 1/10W 10K	9	
R32		ERJ6GEYJ472	M.RESISTOR CH 1/10W 4.7K	1	
R33		ERJ6GEYJ102	M.RESISTOR CH 1/10W 1K	1	
R34		ERJ6GEYJ103	M.RESISTOR CH 1/10W 10K	1	
R35		ERJ6GEYJ473	M.RESISTOR CH 1/10W 47K	1	
R36		ERJ6GEYJ103	M.RESISTOR CH 1/10W 10K	1	
R37-47		ERJ6GEYJ473	M.RESISTOR CH 1/10W 47K	11	
R48		ERJ6GEYJ474	M.RESISTOR CH 1/10W 470K	1	
R49		ERJ6GEYJ103	M.RESISTOR CH 1/10W 10K	1	
R50		ERJ6GEYJ223	M.RESISTOR CH 1/10W 22K	1	
R51,52		ERJ6GEYJ473	M.RESISTOR CH 1/10W 47K	2	
R53		ERJ6GEYJ223	M.RESISTOR CH 1/10W 22K	1	
R54-72		ERJ6GEYJ103	M.RESISTOR CH 1/10W 10K	19	
R73-77		ERJ6GEYJ473	M.RESISTOR CH 1/10W 47K	5	
R79		ERJ6GEYJ473	M.RESISTOR CH 1/10W 47K	1	
R81-85		ERJ6GEYJ473	M.RESISTOR CH 1/10W 47K	5	
R86,87		ERJ6GEYJ223	M.RESISTOR CH 1/10W 22K	2	
R88		ERJ6GEYJ473	M.RESISTOR CH 1/10W 47K	1	
R93-96		ERJ6GEYJ473	M.RESISTOR CH 1/10W 47K	4	

Ref.No.		Part No.	Part Name & Description	Pcs	Remarks
R97		ERJ6GEYJ101	M.RESISTOR CH 1/10W 100	1	
R100		ERJ6GEYJ101	M.RESISTOR CH 1/10W 100	1	
R101		ERJ6GEYJ473	M.RESISTOR CH 1/10W 47K	1	
R102,03		ERJ6GEYJ101	M.RESISTOR CH 1/10W 100	2	
R104		ERJ6GEYJ223	M.RESISTOR CH 1/10W 22K	1	
R105		ERJ6GEYJ103	M.RESISTOR CH 1/10W 10K	1	
R106		ERJ6GEYJ474	M.RESISTOR CH 1/10W 470K	1	
R107-22		ERJ6GEYJ103	M.RESISTOR CH 1/10W 10K	16	
R123-25		ERJ6GEYJ101	M.RESISTOR CH 1/10W 100	3	
R126,27		ERJ6GEYJ562	M.RESISTOR CH 1/10W 5.6K	2	
R128		ERJ6GEYJ472	M.RESISTOR CH 1/10W 4.7K	1	
R129		ERJ6GEYJ223	M.RESISTOR CH 1/10W 22K	1	
R130-32		ERJ6GEYJ473	M.RESISTOR CH 1/10W 47K	3	
R133,34		ERJ6GEYJ562	M.RESISTOR CH 1/10W 5.6K	2	
R135		ERJ6GEYJ101	M.RESISTOR CH 1/10W 100	1	
R136		ERJ6GEYJ223	M.RESISTOR CH 1/10W 22K	1	
R137-43		ERJ6GEYJ473	M.RESISTOR CH 1/10W 47K	7	
R144		ERJ6GEYJ332	M.RESISTOR CH 1/10W 3.3K	1	
R145		ERJ6GEYJ101	M.RESISTOR CH 1/10W 100	1	
R146		ERJ6GEYJ223	M.RESISTOR CH 1/10W 22K	1	
R147		ERJ6GEYJ332	M.RESISTOR CH 1/10W 3.3K	1	
R148		ERJ6GEYJ101	M.RESISTOR CH 1/10W 100	1	
R149		ERJ6GEYJ102	M.RESISTOR CH 1/10W 1K	1	
R150		ERJ6GEYJ332	M.RESISTOR CH 1/10W 3.3K	1	
R151		ERJ6GEYJ101	M.RESISTOR CH 1/10W 100	1	
R152		ERJ6GEYJ223	M.RESISTOR CH 1/10W 22K	1	
R153		ERJ6GEYJ332	M.RESISTOR CH 1/10W 3.3K	1	
R154		ERJ6GEYJ101	M.RESISTOR CH 1/10W 100	1	
R155		ERJ6GEYJ102	M.RESISTOR CH 1/10W 1K	1	
R156,57		ERJ6GEYJ104	M.RESISTOR CH 1/10W 100K	2	
R158		ERJ6GEYJ332	M.RESISTOR CH 1/10W 3.3K	1	
R159		ERJ6GEYJ103	M.RESISTOR CH 1/10W 10K	1	
R160,61		ERJ6GEYJ102	M.RESISTOR CH 1/10W 1K	2	
R162		ERJ6GEYJ332	M.RESISTOR CH 1/10W 3.3K	1	
R163		ERJ6GEYJ103	M.RESISTOR CH 1/10W 10K	1	
R164		ERJ6GEYJ105	M.RESISTOR CH 1/10W 1M	1	
R165		ERJ6GEYJ223	M.RESISTOR CH 1/10W 22K	1	
R166		ERJ6GEYJ105	M.RESISTOR CH 1/10W 1M	1	
R167		ERJ6GEYJ223	M.RESISTOR CH 1/10W 22K	1	
R168,69		ERJ6GEYJ103	M.RESISTOR CH 1/10W 10K	2	
R170		ERJ6GEYJ104	M.RESISTOR CH 1/10W 100K	1	
R171		VRE0034E623	M.RESISTOR CH 1/10W 62K	1	
R172		ERJ6GEYJ104	M.RESISTOR CH 1/10W 100K	1	
R173-83		ERJ6GEYJ103	M.RESISTOR CH 1/10W 10K	11	
R184-86		ERJ6GEYJ473	M.RESISTOR CH 1/10W 47K	3	
R187-91		ERJ6GEYJ103	M.RESISTOR CH 1/10W 10K	5	
R192,93		ERJ6GEYJ101	M.RESISTOR CH 1/10W 100	2	
R194-01		ERJ6GEYJ103	M.RESISTOR CH 1/10W 10K	8	
R202		ERJ6GEYJ473	M.RESISTOR CH 1/10W 47K	1	
R203-06		ERJ6GEYJ103	M.RESISTOR CH 1/10W 10K	4	
R207,08		ERJ6GEYJ223	M.RESISTOR CH 1/10W 22K	2	
R209,10		ERJ6GEYJ122	M.RESISTOR CH 1/10W 1.2K	2	
R211		ERJ6GEYJ101	M.RESISTOR CH 1/10W 100	1	
R212		ERJ6GEYJ474	M.RESISTOR CH 1/10W 470K	1	
R213		ERJ6GEYJ103	M.RESISTOR CH 1/10W 10K	1	
R214		ERJ6GEYJ223	M.RESISTOR CH 1/10W 22K	1	
R215		ERJ6GEYJ473	M.RESISTOR CH 1/10W 47K	1	
R216,17		ERJ6GEYJ223	M.RESISTOR CH 1/10W 22K	2	
R218,19		ERJ6GEYJ101	M.RESISTOR CH 1/10W 100	2	
R220		ERJ6GEYJ223	M.RESISTOR CH 1/10W 22K	1	
R221		ERJ6GEYJ101	M.RESISTOR CH 1/10W 100	1	
R222		ERJ6GEYJ474	M.RESISTOR CH 1/10W 470K	1	
R223		ERJ6GEYJ103	M.RESISTOR CH 1/10W 10K	1	
R224		ERJ6GEYJ223	M.RESISTOR CH 1/10W 22K	1	
R225		ERJ6GEYJ102	M.RESISTOR CH 1/10W 1K	1	
R226		ERJ6GEYJ473	M.RESISTOR CH 1/10W 47K	1	
R227		ERJ6GEYJ103	M.RESISTOR CH 1/10W 10K	1	
R228		ERJ6GEYJ223	M.RESISTOR CH 1/10W 22K	1	
R229		ERJ6GEYJ473	M.RESISTOR CH 1/10W 47K	1	
R230		ERJ6GEYJ103	M.RESISTOR CH 1/10W 10K	1	
R231		ERJ6GEYJ101	M.RESISTOR CH 1/10W 100	1	
R232		ERJ6GEYJ223	M.RESISTOR CH 1/10W 22K	1	
R233,34		ERJ6GEYJ473	M.RESISTOR CH 1/10W 47K	2	
R235		ERJ6GEYJ223	M.RESISTOR CH 1/10W 22K	1	
R236-39		ERJ6GEYJ473	M.RESISTOR CH 1/10W 47K	4	

Refer to the P.C.BOARDS LIST, page 6-1-1, before using this page.

Ref.No.		Part No.	Part Name & Description	Pcs	Remarks
R240		ERJ6GEYJ103	M.RESISTOR CH 1/10W 10K	1	
R241-45		ERJ6GEYJ473	M.RESISTOR CH 1/10W 47K	5	
R247		ERJ6GEYJ103	M.RESISTOR CH 1/10W 10K	1	
R248,49		ERJ6GEYJ102	M.RESISTOR CH 1/10W 1K	2	
R250		ERJ6GEYJ223	M.RESISTOR CH 1/10W 22K	1	
R251		ERJ6GEYJ123	M.RESISTOR CH 1/10W 12K	1	
R252		ERJ6GEYJ103	M.RESISTOR CH 1/10W 10K	1	
R253		ERJ6GEYJ393	M.RESISTOR CH 1/10W 39K	1	
R254		ERJ6GEYJ223	M.RESISTOR CH 1/10W 22K	1	
R255		ERJ6GEYJ562	M.RESISTOR CH 1/10W 5.6K	1	
R256		ERJ6GEYJ223	M.RESISTOR CH 1/10W 22K	1	
R257		ERJ6GEYJ473	M.RESISTOR CH 1/10W 47K	1	
R258		ERJ6GEYJ103	M.RESISTOR CH 1/10W 10K	1	
R259,60		ERJ6GEYJ223	M.RESISTOR CH 1/10W 22K	2	
R261		ERJ6GEYJ183	M.RESISTOR CH 1/10W 18K	1	
R262		ERJ6GEYJ103	M.RESISTOR CH 1/10W 10K	1	
R263		ERJ6GEYJ333	M.RESISTOR CH 1/10W 33K	1	
R264,65		ERJ6GEYJ473	M.RESISTOR CH 1/10W 47K	2	
R266-68		ERJ6GEYJ101	M.RESISTOR CH 1/10W 100	3	
R269		ERJ6GEYJ103	M.RESISTOR CH 1/10W 10K	1	
R270		ERJ6GEYJ101	M.RESISTOR CH 1/10W 100	1	
R272-77		ERJ6GEYJ103	M.RESISTOR CH 1/10W 10K	6	
R278-85		ERJ6GEYJ473	M.RESISTOR CH 1/10W 47K	8	
R286		ERJ6GEYJ103	M.RESISTOR CH 1/10W 10K	1	
R287		ERJ6GEYJ223	M.RESISTOR CH 1/10W 22K	1	
R288,89		ERJ6GEYJ103	M.RESISTOR CH 1/10W 10K	2	
R290		ERJ6GEYJ473	M.RESISTOR CH 1/10W 47K	1	
R291,92		ERJ6GEYJ101	M.RESISTOR CH 1/10W 100	2	
R294		ERJ6GEYJ103	M.RESISTOR CH 1/10W 10K	1	
R295		ERJ6GEYJ564	M.RESISTOR CH 1/10W 560K	1	
R296		ERJ6GEYJ473	M.RESISTOR CH 1/10W 47K	1	
R301		ERJ6GEYJ563	M.RESISTOR CH 1/10W 56K	1	
R302,03		ERJ6GEYJ333	M.RESISTOR CH 1/10W 33K	2	
R304		ERJ6GEYJ473	M.RESISTOR CH 1/10W 47K	1	
R502		ERJ6GEYJ122	M.RESISTOR CH 1/10W 1.2K	1	
R504		ERJ6GEYJ222	M.RESISTOR CH 1/10W 2.2K	1	
R505		ERJ6GEYJ223	M.RESISTOR CH 1/10W 22K	1	
R506		ERJ6GEYJ103	M.RESISTOR CH 1/10W 10K	1	
R507		ERJ6GEYJ102	M.RESISTOR CH 1/10W 1K	1	
R508		ERJ6GEYJ104	M.RESISTOR CH 1/10W 100K	1	
R509		ERJ6GEYJ103	M.RESISTOR CH 1/10W 10K	1	
R510		ERJ6GEYJ223	M.RESISTOR CH 1/10W 22K	1	
R511		ERJ6GEYJ102	M.RESISTOR CH 1/10W 1K	1	
R512		ERJ6GEYJ104	M.RESISTOR CH 1/10W 100K	1	
R513		ERJ6GEYJ222	M.RESISTOR CH 1/10W 2.2K	1	
R514		ERJ6GEYJ223	M.RESISTOR CH 1/10W 22K	1	
R515		ERJ6GEYJ103	M.RESISTOR CH 1/10W 10K	1	
R516		ERJ6GEYJ102	M.RESISTOR CH 1/10W 1K	1	
R517		ERJ6GEYJ104	M.RESISTOR CH 1/10W 100K	1	
R518		ERJ6GEYJ223	M.RESISTOR CH 1/10W 22K	1	
R519		ERJ6GEYJ103	M.RESISTOR CH 1/10W 10K	1	
R520		ERJ6GEYJ102	M.RESISTOR CH 1/10W 1K	1	
R521		ERJ6GEYJ104	M.RESISTOR CH 1/10W 100K	1	
R522		ERJ6GEYJ222	M.RESISTOR CH 1/10W 2.2K	1	
R523		ERJ6GEYJ223	M.RESISTOR CH 1/10W 22K	1	
R524		ERJ6GEYJ103	M.RESISTOR CH 1/10W 10K	1	
R525		ERJ6GEYJ102	M.RESISTOR CH 1/10W 1K	1	
R526		ERJ6GEYJ104	M.RESISTOR CH 1/10W 100K	1	
R527		ERJ6GEYJ223	M.RESISTOR CH 1/10W 22K	1	
R528		ERJ6GEYJ103	M.RESISTOR CH 1/10W 10K	1	
R529		ERJ6GEYJ102	M.RESISTOR CH 1/10W 1K	1	
R530		ERJ6GEYJ104	M.RESISTOR CH 1/10W 100K	1	
R531,32		ERX1SJ1R0	M.RESISTOR 1W 1	2	
R533		ERJ6GEYJ104	M.RESISTOR CH 1/10W 100K	1	
R536		ERJ6GEYJ562	M.RESISTOR CH 1/10W 5.6K	1	
R537		ERJ6GEYJ222	M.RESISTOR CH 1/10W 2.2K	1	
R538		ERJ6GEYJ103	M.RESISTOR CH 1/10W 10K	1	
R539		ERJ6GEYJ223	M.RESISTOR CH 1/10W 22K	1	
R540		ERJ6GEYJ102	M.RESISTOR CH 1/10W 1K	1	
R541		ERJ6GEYJ104	M.RESISTOR CH 1/10W 100K	1	
R542		ERJ6GEYJ272	M.RESISTOR CH 1/10W 2.7K	1	
R543		ERJ6GEYJ271	M.RESISTOR CH 1/10W 270	1	

Ref.No.		Part No.	Part Name & Description	Pcs	Remarks
SW1		VSS0223	SWITCH	1	
SW3		VSR0045	SWITCH	1	
SW4-W6		EVQQEJ06K	SWITCH	3	
SW7		VST0096	SWITCH	1	
TP17-19		VJR0646	TEST POINT	3	
TPG1,G2		VJR0646	TEST POINT	2	
VC1		ECV1ZW20X60	V.CAPACITOR 20P	1	
X1		VSX0373	CRYSTAL OSCILLATOR	1	
			MISCELLANEOUS		
		VML2143	CARD PULLER	1	
		VML2144	CARD PULLER	1	
		VMS4174	PIN	4	
		VMZ1548	BARRIER	1	
		VSC3057	SHIELD CASE	1	
		VSC3058	SHIELD CASE	1	
		VSC3059	SHIELD CASE	1	
		VXA3967	P.C.B. SHIELD PLATE	1	
		XNG26E	NUT	4	
		XNG3ES	NUT	2	
		XSN3+6S	SCREW	2	
		XYNV3+K6FR	SCREW	4	
		XYN26+C10	SCREW	1	

Refer to the P.C.BOARDS LIST, page 6-1-1, before using this page.

Ref.No.		Part No.	Part Name & Description	Pcs	Remarks
	■	VEP86088D	P.C.BOARD W/COMPONENT		FOR AU-63-P
			B1 SYSTEM CONTROL		
B1L		VJP2899B096	CONNECTOR(MALE)	1	
B1R		VJP2899B096	CONNECTOR(MALE)	1	
			CAPACITORS		
C1,C2		ECUM1H331JCN	C.CAPACITOR CH 50V 330P	2	
C3-C5		ECUM1H102JCN	C.CAPACITOR CH 50V 1000P	3	
C6-C9		ECUM1H103ZFN	C.CAPACITOR CH 50V 0.01U	4	
C10		ECEA0JU221	E.CAPACITOR 6.3V 220U	1	
C11		ECEA0JU101	E.CAPACITOR 6.3V 100U	1	
C12,13		ECUM1E104ZFN	C.CAPACITOR CH 25V 0.1U	2	
C14,15		ECUM1H270JCN	C.CAPACITOR CH 50V 27P	2	
C16-18		ECUM1H103ZFN	C.CAPACITOR CH 50V 0.01U	3	
C19		ECEA1HU3R3	E.CAPACITOR 50V 3.3U	1	
C20		ECQM1H104JF	P.CAPACITOR 50V 0.1U	1	
C21-23		ECUM1H103ZFN	C.CAPACITOR CH 50V 0.01U	3	
C25		ECEA0JU471	E.CAPACITOR 6.3V 470U	1	
C26,27		ECUM1H680JCN	C.CAPACITOR CH 50V 68P	2	
C28-33		ECUM1H103ZFN	C.CAPACITOR CH 50V 0.01U	6	
C34		ECUM1E104ZFN	C.CAPACITOR CH 25V 0.1U	1	
C35,36		ECUM1H103ZFN	C.CAPACITOR CH 50V 0.01U	2	
C37		ECEA1CU100	E.CAPACITOR 16V 10U	1	
C38-41		ECUM1E104ZFN	C.CAPACITOR CH 25V 0.1U	4	
C42-47		ECUM1H103ZFN	C.CAPACITOR CH 50V 0.01U	6	
C50		ECUM1H103ZFN	C.CAPACITOR CH 50V 0.01U	1	
C51		ECEA1CU100	E.CAPACITOR 16V 10U	1	
C52		ECUM1E104ZFN	C.CAPACITOR CH 25V 0.1U	1	
C53		ECUM1H103ZFN	C.CAPACITOR CH 50V 0.01U	1	
C75-82		ECUM1H103ZFN	C.CAPACITOR CH 50V 0.01U	8	
C83,84		ECEA1HU010	E.CAPACITOR 50V 1U	2	
C85		ECEA1CN100S	E.CAPACITOR 16V 10U	1	
C86		ECUM1H101JCN	C.CAPACITOR CH 50V 100P	1	
C87		ECUM1H103ZFN	C.CAPACITOR CH 50V 0.01U	1	
C88		ECEA1CN100S	E.CAPACITOR 16V 10U	1	
C89		ECUM1H101JCN	C.CAPACITOR CH 50V 100P	1	
C90		ECUM1H103ZFN	C.CAPACITOR CH 50V 0.01U	1	
C91		ECEA1HU010	E.CAPACITOR 50V 1U	1	
C92		ECUM1H103ZFN	C.CAPACITOR CH 50V 0.01U	1	
C93		ECQP1H392JZ	P.CAPACITOR 50V 3900P	1	
C94		ECEA1HU010	E.CAPACITOR 50V 1U	1	
C95		ECUM1H103ZFN	C.CAPACITOR CH 50V 0.01U	1	
C96-99		ECUM1E104ZFN	C.CAPACITOR CH 25V 0.1U	4	
C100,01		ECUM1E104ZFN	C.CAPACITOR CH 25V 0.1U	2	
C105,06		ECUM1H103ZFN	C.CAPACITOR CH 50V 0.01U	2	
C107		ECUM1E104ZFN	C.CAPACITOR CH 25V 0.1U	1	
C108-14		ECUM1H103ZFN	C.CAPACITOR CH 50V 0.01U	7	
C115		ECUM1E104ZFN	C.CAPACITOR CH 25V 0.1U	1	
C116-19		ECUM1H103ZFN	C.CAPACITOR CH 50V 0.01U	4	
C120		ECEA1HU010	E.CAPACITOR 50V 1U	1	
C121-23		ECUM1H103ZFN	C.CAPACITOR CH 50V 0.01U	3	
C124		ECUM1H150JCN	C.CAPACITOR CH 50V 15P	1	
C125		ECUM1H270JCN	C.CAPACITOR CH 50V 27P	1	
C127-38		ECUM1H103ZFN	C.CAPACITOR CH 50V 0.01U	12	
C140		ECUM1H103ZFN	C.CAPACITOR CH 50V 0.01U	1	
C141		ECEA1HU2R2	E.CAPACITOR 50V 2.2U	1	
C142		ECQM1H154JF	P.CAPACITOR 50V 0.15U	1	
C143		ECQM1H104JF	P.CAPACITOR 50V 0.1U	1	
C147,48		ECUM1H103ZFN	C.CAPACITOR CH 50V 0.01U	2	
C151		ECUM1H103ZFN	C.CAPACITOR CH 50V 0.01U	1	
C154		ECUM1H102JCN	C.CAPACITOR CH 50V 1000P	1	
C155		ECKF1H102KB	C.CAPACITOR 50V 1000P	1	
C500-02		ECEA1EU4R7	E.CAPACITOR 25V 4.7U	3	
C503-05		ECEA1HN2R2S	E.CAPACITOR 50V 2.2U	3	
C506-08		ECEA1EU101	E.CAPACITOR 25V 100U	3	

Ref.No.		Part No.	Part Name & Description	Pcs	Remarks
D1		MA151WA	DIODE	1	
D2		MA153	DIODE	1	
D3		MA151K	DIODE	1	
D4,D5		MA151WA	DIODE	2	
D7-D9		MA151K	DIODE	3	
D10-13		MA151K	DIODE	4	
D15		MA151K	DIODE	1	
D16		MA151WK	DIODE	1	
D17		MA151WA	DIODE	1	
D18,19		MA151K	DIODE	2	
D20		MA151WK	DIODE	1	
D500		MA151K	DIODE	1	
D501-06		10E1	DIODE	6	
D507,08		MA151K	DIODE	2	
D509		10E1	DIODE	1	
D510		MA151WK	DIODE	1	
D511		MA3039-H	DIODE	1	
D512		MA3075H	DIODE	1	
D513		MA3051-H	DIODE	1	
D514		MA3056-H	DIODE	1	
D515		MA3100-M	DIODE	1	
IC1		MC14024BF	IC	1	
IC2		MC34051M	IC	1	
IC3		TMPZ84C43AF6	IC	1	
IC4		UPD71054GB	IC	1	
IC5		HD64180ZF8	IC	1	
IC6		TL7705CPSB	IC	1	
IC7		VSI0685B	IC	1	
IC8,C9		MC74HC541F	IC	2	
IC10		MBM221220	IC	1	
IC11		VSI0234	IC	1	
IC13		MC74HC4538F	IC	1	
IC14		MC74HC541F	IC	1	
IC15		MC74HC245AF	IC	1	
IC16,17		MC74HC138AF	IC	2	
IC18		MB89363BPF	IC	1	
IC19,20		MC14094BF	IC.	2	
IC21		MB89363BPF	IC	1	
IC24		MC14013BF	IC	1	
IC25,26		MC14027BF	IC	2	
IC27-29		MC14538BF	IC	3	
IC30		MB621176PF	IC	1	
IC31		MB89363BPF	IC	1	
IC34		MC14094BF	IC	1	
IC35		MB89363BPF	IC	1	
IC36-41		MC14021BF	IC	6	
IC42		MB89363BPF	IC	1	
IC43,44		MC14094BF	IC	2	
IC45		MC14021BF	IC	1	
IC46		M50455-001SP	IC	1	
IC47,48		MC14050BF	IC	2	
IC49		SN74LS38NS	IC	1	
IC50,51		MC74HC132F	IC	2	
IC52		MC74HC04AF	IC	1	
IC53,54		MC14049UBF	IC	2	
IC55		MC74HC00AF	IC	1	
IC56		M74F32FP	IC	1	
IC57		MN4030BS	IC	1	
IC58		MC74HC541F	IC	1	
IC59		LM2903M	IC	1	
IC60,61		NJM2901M	IC	2	
IC62		MC74HC00AF	IC	1	
IC63		MC74HC138AF	IC	1	
IC64,65		MC14021BF	IC	2	
IC66,67		MC14094BF	IC	2	
IC68		MB89363BPF	IC	1	
IC69		TC74HC190AF	IC	1	
IC71		MC14538BF	IC	1	
IC72		MC74HC86F	IC	1	

Refer to the P.C.BOARDS LIST, page 6-1-1, before using this page.

Ref.No.		Part No.	Part Name & Description	Pcs	Remarks
IC75		MN4030BS	IC	1	
IC500		PU3124	IC	1	
IC501		PU4124	IC	1	
IC502,03		BA6238AU2M	IC	2	
IC7S		VJS2336A032	CONNECTOR (FEMALE)	1	
IC10S		VJS2336A018	CONNECTOR (FEMALE)	1	
L1		VLP0017	COIL	1	
L2		VLQEL05S150J	COIL 15UH	1	
Q1		2SB710-R	TRANSISTOR	1	(Q,R)
Q2		DTC144EK	TRANSISTOR-RESISTOR	1	
Q3,Q4		DTC114YK	TRANSISTOR-RESISTOR	2	
Q5		UN2214	TRANSISTOR-RESISTOR	1	
Q9		UN2214	TRANSISTOR-RESISTOR	1	
Q15		2SB710-R	TRANSISTOR	1	(Q,R)
Q16		2SD602-R	TRANSISTOR	1	(Q,R)
Q17-22		DTC144EK	TRANSISTOR-RESISTOR	6	
Q25-27		DTC144EK	TRANSISTOR-RESISTOR	3	
Q29-35		DTC144EK	TRANSISTOR-RESISTOR	7	
Q38-42		DTC144EK	TRANSISTOR-RESISTOR	5	
Q44		DTC144EK	TRANSISTOR-RESISTOR	1	
Q46,47		DTC144EK	TRANSISTOR-RESISTOR	2	
Q48		2SD946A	TRANSISTOR	1	
Q500,01		UN2213	TRANSISTOR-RESISTOR	2	
Q502,03		2SB709-R	TRANSISTOR CHIP	2	(Q,R)
Q504		UN2213	TRANSISTOR-RESISTOR	1	
Q505,06		2SB709-R	TRANSISTOR CHIP	2	(Q,R)
Q507		UN2213	TRANSISTOR-RESISTOR	1	
Q508,09		2SB709-R	TRANSISTOR CHIP	2	(Q,R)
Q510-14		UN2213	TRANSISTOR-RESISTOR	5	
Q515		2SB709-R	TRANSISTOR CHIP	1	(Q,R)
			RESISTORS		
R1		ERJ6GEYJ223	M.RESISTOR CH 1/10W 22K	1	
R2		ERJ6GEY0R00	M.RESISTOR CH 1/10W 0	1	
R3		ERJ6GEYJ223	M.RESISTOR CH 1/10W 22K	1	
R4		ERJ6GEY0R00	M.RESISTOR CH 1/10W 0	1	
R5		ERJ6GEYJ562	M.RESISTOR CH 1/10W 5.6K	1	
R6		ERJ6GEYJ103	M.RESISTOR CH 1/10W 10K	1	
R7-R9		ERJ6GEYJ681	M.RESISTOR CH 1/10W 680	3	
R10		ERJ6GEYJ473	M.RESISTOR CH 1/10W 47K	1	
R11		ERJ6GEYJ152	M.RESISTOR CH 1/10W 1.5K	1	
R12		ERJ6GEYJ101	M.RESISTOR CH 1/10W 100	1	
R13,14		ERJ6GEYJ152	M.RESISTOR CH 1/10W 1.5K	2	
R15		ERJ6GEYJ101	M.RESISTOR CH 1/10W 100	1	
R16		ERJ6GEYJ152	M.RESISTOR CH 1/10W 1.5K	1	
R17		ERJ6GEYJ473	M.RESISTOR CH 1/10W 47K	1	
R18		ERJ6GEYJ472	M.RESISTOR CH 1/10W 4.7K	1	
R19-22		ERJ6GEYJ473	M.RESISTOR CH 1/10W 47K	4	
R23-31		ERJ6GEYJ103	M.RESISTOR CH 1/10W 10K	9	
R32		ERJ6GEYJ472	M.RESISTOR CH 1/10W 4.7K	1	
R33		ERJ6GEYJ102	M.RESISTOR CH 1/10W 1K	1	
R34		ERJ6GEYJ103	M.RESISTOR CH 1/10W 10K	1	
R35		ERJ6GEYJ473	M.RESISTOR CH 1/10W 47K	1	
R36		ERJ6GEYJ103	M.RESISTOR CH 1/10W 10K	1	
R37-47		ERJ6GEYJ473	M.RESISTOR CH 1/10W 47K	11	
R48		ERJ6GEYJ474	M.RESISTOR CH 1/10W 470K	1	
R49		ERJ6GEYJ103	M.RESISTOR CH 1/10W 10K	1	
R50		ERJ6GEYJ223	M.RESISTOR CH 1/10W 22K	1	
R51,52		ERJ6GEYJ473	M.RESISTOR CH 1/10W 47K	2	
R53		ERJ6GEYJ223	M.RESISTOR CH 1/10W 22K	1	
R54-72		ERJ6GEYJ103	M.RESISTOR CH 1/10W 10K	19	
R73-77		ERJ6GEYJ473	M.RESISTOR CH 1/10W 47K	5	
R79		ERJ6GEYJ473	M.RESISTOR CH 1/10W 47K	1	
R81-85		ERJ6GEYJ473	M.RESISTOR CH 1/10W 47K	5	
R86,87		ERJ6GEYJ223	M.RESISTOR CH 1/10W 22K	2	
R88		ERJ6GEYJ473	M.RESISTOR CH 1/10W 47K	1	
R93-96		ERJ6GEYJ473	M.RESISTOR CH 1/10W 47K	4	

Ref.No.		Part No.	Part Name & Description	Pcs	Remarks
R97		ERJ6GEYJ101	M.RESISTOR CH 1/10W 100	1	
R100		ERJ6GEYJ101	M.RESISTOR CH 1/10W 100	1	
R101		ERJ6GEYJ473	M.RESISTOR CH 1/10W 47K	1	
R102,03		ERJ6GEYJ101	M.RESISTOR CH 1/10W 100	2	
R104		ERJ6GEYJ223	M.RESISTOR CH 1/10W 22K	1	
R105		ERJ6GEYJ103	M.RESISTOR CH 1/10W 10K	1	
R106		ERJ6GEYJ474	M.RESISTOR CH 1/10W 470K	1	
R107-22		ERJ6GEYJ103	M.RESISTOR CH 1/10W 10K	16	
R123-25		ERJ6GEYJ101	M.RESISTOR CH 1/10W 100	3	
R126,27		ERJ6GEYJ562	M.RESISTOR CH 1/10W 5.6K	2	
R128		ERJ6GEYJ472	M.RESISTOR CH 1/10W 4.7K	1	
R129		ERJ6GEYJ223	M.RESISTOR CH 1/10W 22K	1	
R130-32		ERJ6GEYJ473	M.RESISTOR CH 1/10W 47K	3	
R133,34		ERJ6GEYJ562	M.RESISTOR CH 1/10W 5.6K	2	
R135		ERJ6GEYJ101	M.RESISTOR CH 1/10W 100	1	
R136		ERJ6GEYJ223	M.RESISTOR CH 1/10W 22K	1	
R137-43		ERJ6GEYJ473	M.RESISTOR CH 1/10W 47K	7	
R144		ERJ6GEYJ332	M.RESISTOR CH 1/10W 3.3K	1	
R145		ERJ6GEYJ101	M.RESISTOR CH 1/10W 100	1	
R146		ERJ6GEYJ223	M.RESISTOR CH 1/10W 22K	1	
R147		ERJ6GEYJ332	M.RESISTOR CH 1/10W 3.3K	1	
R148		ERJ6GEYJ101	M.RESISTOR CH 1/10W 100	1	
R149		ERJ6GEYJ102	M.RESISTOR CH 1/10W 1K	1	
R150		ERJ6GEYJ332	M.RESISTOR CH 1/10W 3.3K	1	
R151		ERJ6GEYJ101	M.RESISTOR CH 1/10W 100	1	
R152		ERJ6GEYJ223	M.RESISTOR CH 1/10W 22K	1	
R153		ERJ6GEYJ332	M.RESISTOR CH 1/10W 3.3K	1	
R154		ERJ6GEYJ101	M.RESISTOR CH 1/10W 100	1	
R155		ERJ6GEYJ102	M.RESISTOR CH 1/10W 1K	1	
R156,57		ERJ6GEYJ104	M.RESISTOR CH 1/10W 100K	2	
R158		ERJ6GEYJ332	M.RESISTOR CH 1/10W 3.3K	1	
R159		ERJ6GEYJ103	M.RESISTOR CH 1/10W 10K	1	
R160,61		ERJ6GEYJ102	M.RESISTOR CH 1/10W 1K	2	
R162		ERJ6GEYJ332	M.RESISTOR CH 1/10W 3.3K	1	
R163		ERJ6GEYJ103	M.RESISTOR CH 1/10W 10K	1	
R164		ERJ6GEYJ105	M.RESISTOR CH 1/10W 1M	1	
R165		ERJ6GEYJ223	M.RESISTOR CH 1/10W 22K	1	
R166		ERJ6GEYJ105	M.RESISTOR CH 1/10W 1M	1	
R167		ERJ6GEYJ223	M.RESISTOR CH 1/10W 22K	1	
R168,69		ERJ6GEYJ103	M.RESISTOR CH 1/10W 10K	2	
R170		ERJ6GEYJ104	M.RESISTOR CH 1/10W 100K	1	
R171		VRE0034E623	M.RESISTOR CH 1/10W 62K	1	
R172		ERJ6GEYJ104	M.RESISTOR CH 1/10W 100K	1	
R173-83		ERJ6GEYJ103	M.RESISTOR CH 1/10W 10K	11	
R184-86		ERJ6GEYJ473	M.RESISTOR CH 1/10W 47K	3	
R187-91		ERJ6GEYJ103	M.RESISTOR CH 1/10W 10K	5	
R192,93		ERJ6GEYJ101	M.RESISTOR CH 1/10W 100	2	
R194-01		ERJ6GEYJ103	M.RESISTOR CH 1/10W 10K	8	
R202		ERJ6GEYJ473	M.RESISTOR CH 1/10W 47K	1	
R203-06		ERJ6GEYJ103	M.RESISTOR CH 1/10W 10K	4	
R207,08		ERJ6GEYJ223	M.RESISTOR CH 1/10W 22K	2	
R209,10		ERJ6GEYJ122	M.RESISTOR CH 1/10W 1.2K	2	
R211		ERJ6GEYJ101	M.RESISTOR CH 1/10W 100	1	
R212		ERJ6GEYJ474	M.RESISTOR CH 1/10W 470K	1	
R213		ERJ6GEYJ103	M.RESISTOR CH 1/10W 10K	1	
R214		ERJ6GEYJ223	M.RESISTOR CH 1/10W 22K	1	
R215		ERJ6GEYJ473	M.RESISTOR CH 1/10W 47K	1	
R216,17		ERJ6GEYJ223	M.RESISTOR CH 1/10W 22K	2	
R218,19		ERJ6GEYJ101	M.RESISTOR CH 1/10W 100	2	
R220		ERJ6GEYJ223	M.RESISTOR CH 1/10W 22K	1	
R221		ERJ6GEYJ101	M.RESISTOR CH 1/10W 100	1	
R222		ERJ6GEYJ474	M.RESISTOR CH 1/10W 470K	1	
R223		ERJ6GEYJ103	M.RESISTOR CH 1/10W 10K	1	
R224		ERJ6GEYJ223	M.RESISTOR CH 1/10W 22K	1	
R225		ERJ6GEYJ102	M.RESISTOR CH 1/10W 1K	1	
R226		ERJ6GEYJ473	M.RESISTOR CH 1/10W 47K	1	
R227		ERJ6GEYJ103	M.RESISTOR CH 1/10W 10K	1	
R228		ERJ6GEYJ223	M.RESISTOR CH 1/10W 22K	1	
R229		ERJ6GEYJ473	M.RESISTOR CH 1/10W 47K	1	
R230		ERJ6GEYJ103	M.RESISTOR CH 1/10W 10K	1	
R231		ERJ6GEYJ101	M.RESISTOR CH 1/10W 100	1	
R232		ERJ6GEYJ223	M.RESISTOR CH 1/10W 22K	1	
R233,34		ERJ6GEYJ473	M.RESISTOR CH 1/10W 47K	2	
R235		ERJ6GEYJ223	M.RESISTOR CH 1/10W 22K	1	
R236-39		ERJ6GEYJ473	M.RESISTOR CH 1/10W 47K	4	

Refer to the P.C.BOARDS LIST, page 6-1-1, before using this page.

Ref.No.		Part No.	Part Name & Description	Pcs	Remarks
R240		ERJ6GEYJ103	M.RESISTOR CH 1/10W 10K	1	
R241-45		ERJ6GEYJ473	M.RESISTOR CH 1/10W 47K	5	
R247		ERJ6GEYJ103	M.RESISTOR CH 1/10W 10K	1	
R248,49		ERJ6GEYJ102	M.RESISTOR CH 1/10W 1K	2	
R250		ERJ6GEYJ223	M.RESISTOR CH 1/10W 22K	1	
R251		ERJ6GEYJ123	M.RESISTOR CH 1/10W 12K	1	
R252		ERJ6GEYJ103	M.RESISTOR CH 1/10W 10K	1	
R253		ERJ6GEYJ393	M.RESISTOR CH 1/10W 39K	1	
R254		ERJ6GEYJ223	M.RESISTOR CH 1/10W 22K	1	
R255		ERJ6GEYJ562	M.RESISTOR CH 1/10W 5.6K	1	
R256		ERJ6GEYJ223	M.RESISTOR CH 1/10W 22K	1	
R257		ERJ6GEYJ473	M.RESISTOR CH 1/10W 47K	1	
R258		ERJ6GEYJ103	M.RESISTOR CH 1/10W 10K	1	
R259,60		ERJ6GEYJ223	M.RESISTOR CH 1/10W 22K	2	
R261		ERJ6GEYJ183	M.RESISTOR CH 1/10W 18K	1	
R262		ERJ6GEYJ103	M.RESISTOR CH 1/10W 10K	1	
R263		ERJ6GEYJ333	M.RESISTOR CH 1/10W 33K	1	
R264,65		ERJ6GEYJ473	M.RESISTOR CH 1/10W 47K	2	
R266-68		ERJ6GEYJ101	M.RESISTOR CH 1/10W 100	3	
R269		ERJ6GEYJ103	M.RESISTOR CH 1/10W 10K	1	
R270		ERJ6GEYJ101	M.RESISTOR CH 1/10W 100	1	
R272-77		ERJ6GEYJ103	M.RESISTOR CH 1/10W 10K	6	
R278-85		ERJ6GEYJ473	M.RESISTOR CH 1/10W 47K	8	
R286		ERJ6GEYJ103	M.RESISTOR CH 1/10W 10K	1	
R287		ERJ6GEYJ223	M.RESISTOR CH 1/10W 22K	1	
R288,89		ERJ6GEYJ103	M.RESISTOR CH 1/10W 10K	2	
R290		ERJ6GEYJ473	M.RESISTOR CH 1/10W 47K	1	
R291,92		ERJ6GEYJ101	M.RESISTOR CH 1/10W 100	2	
R294		ERJ6GEYJ103	M.RESISTOR CH 1/10W 10K	1	
R295		ERJ6GEYJ564	M.RESISTOR CH 1/10W 560K	1	
R296		ERJ6GEYJ473	M.RESISTOR CH 1/10W 47K	1	
R301		ERJ6GEYJ563	M.RESISTOR CH 1/10W 56K	1	
R302,03		ERJ6GEYJ333	M.RESISTOR CH 1/10W 33K	2	
R304		ERJ6GEYJ473	M.RESISTOR CH 1/10W 47K	1	
R502		ERJ6GEYJ122	M.RESISTOR CH 1/10W 1.2K	1	
R504		ERJ6GEYJ222	M.RESISTOR CH 1/10W 2.2K	1	
R505		ERJ6GEYJ223	M.RESISTOR CH 1/10W 22K	1	
R506		ERJ6GEYJ103	M.RESISTOR CH 1/10W 10K	1	
R507		ERJ6GEYJ102	M.RESISTOR CH 1/10W 1K	1	
R508		ERJ6GEYJ104	M.RESISTOR CH 1/10W 100K	1	
R509		ERJ6GEYJ103	M.RESISTOR CH 1/10W 10K	1	
R510		ERJ6GEYJ223	M.RESISTOR CH 1/10W 22K	1	
R511		ERJ6GEYJ102	M.RESISTOR CH 1/10W 1K	1	
R512		ERJ6GEYJ104	M.RESISTOR CH 1/10W 100K	1	
R513		ERJ6GEYJ222	M.RESISTOR CH 1/10W 2.2K	1	
R514		ERJ6GEYJ223	M.RESISTOR CH 1/10W 22K	1	
R515		ERJ6GEYJ103	M.RESISTOR CH 1/10W 10K	1	
R516		ERJ6GEYJ102	M.RESISTOR CH 1/10W 1K	1	
R517		ERJ6GEYJ104	M.RESISTOR CH 1/10W 100K	1	
R518		ERJ6GEYJ223	M.RESISTOR CH 1/10W 22K	1	
R519		ERJ6GEYJ103	M.RESISTOR CH 1/10W 10K	1	
R520		ERJ6GEYJ102	M.RESISTOR CH 1/10W 1K	1	
R521		ERJ6GEYJ104	M.RESISTOR CH 1/10W 100K	1	
R522		ERJ6GEYJ222	M.RESISTOR CH 1/10W 2.2K	1	
R523		ERJ6GEYJ223	M.RESISTOR CH 1/10W 22K	1	
R524		ERJ6GEYJ103	M.RESISTOR CH 1/10W 10K	1	
R525		ERJ6GEYJ102	M.RESISTOR CH 1/10W 1K	1	
R526		ERJ6GEYJ104	M.RESISTOR CH 1/10W 100K	1	
R527		ERJ6GEYJ223	M.RESISTOR CH 1/10W 22K	1	
R528		ERJ6GEYJ103	M.RESISTOR CH 1/10W 10K	1	
R529		ERJ6GEYJ102	M.RESISTOR CH 1/10W 1K	1	
R530		ERJ6GEYJ104	M.RESISTOR CH 1/10W 100K	1	
R531,32		ERX1SJ1R0	M.RESISTOR 1W 1	2	
R533		ERJ6GEYJ104	M.RESISTOR CH 1/10W 100K	1	
R536		ERJ6GEYJ562	M.RESISTOR CH 1/10W 5.6K	1	
R537		ERJ6GEYJ222	M.RESISTOR CH 1/10W 2.2K	1	
R538		ERJ6GEYJ103	M.RESISTOR CH 1/10W 10K	1	
R539		ERJ6GEYJ223	M.RESISTOR CH 1/10W 22K	1	
R540		ERJ6GEYJ102	M.RESISTOR CH 1/10W 1K	1	
R541		ERJ6GEYJ104	M.RESISTOR CH 1/10W 100K	1	
R542		ERJ6GEYJ272	M.RESISTOR CH 1/10W 2.7K	1	
R543		ERJ6GEYJ271	M.RESISTOR CH 1/10W 270	1	

Ref.No.		Part No.	Part Name & Description	Pcs	Remarks
SW1		VSS0223	SWITCH	1	
SW3		VSR0045	SWITCH	1	
SW4-W6		EVQQEJ06K	SWITCH	3	
SW7		VST0096	SWITCH	1	
TP17-19		VJR0646	TEST POINT	3	
TPG1,G2		VJR0646	TEST POINT	2	
VC1		ECV1ZW20X60	V.CAPACITOR 20P	1	
X1		VSX0373	CRYSTAL OSCILLATOR	1	
			MISCELLANEOUS		
		VML2143	CARD PULLER	1	
		VML2144	CARD PULLER	1	
		VMS4174	PIN	4	
		VMZ1548	BARRIER	1	
		VSC3057	SHIELD CASE	1	
		VSC3058	SHIELD CASE	1	
		VSC3059	SHIELD CASE	1	
		VXA3967	P.C.B. SHIELD PLATE	1	
		XNG26E	NUT	4	
		XNG3ES	NUT	2	
		XSN3+6S	SCREW	2	
		XYNV3+K6FR	SCREW	4	
		XYN26+C10	SCREW	1	

Refer to the P.C.BOARDS LIST, page 6-1-1, before using this page.

Ref.No.		Part No.	Part Name & Description	Pcs	Remarks
	■	VEP86088E	P.C.BOARD W/COMPONENT		FOR AU-65-E,B
			B1 SYSTEM CONTROL		
B1L		VJP2899B096	CONNECTOR(MALE)	1	
B1R		VJP2899B096	CONNECTOR(MALE)	1	
			CAPACITORS		
C1,C2		ECUM1H331JCN	C.CAPACITOR CH 50V 330P	2	
C3-C5		ECUM1H102JCN	C.CAPACITOR CH 50V 1000P	3	
C6-C9		ECUM1H103ZFN	C.CAPACITOR CH 50V 0.01U	4	
C10		ECEA0JU221	E.CAPACITOR 6.3V 220U	1	
C11		ECEA0JU101	E.CAPACITOR 6.3V 100U	1	
C12,13		ECUM1E104ZFN	C.CAPACITOR CH 25V 0.1U	2	
C14,15		ECUM1H270JCN	C.CAPACITOR CH 50V 27P	2	
C16-18		ECUM1H103ZFN	C.CAPACITOR CH 50V 0.01U	3	
C19		ECEA1HU3R3	E.CAPACITOR 50V 3.3U	1	
C20		ECQM1H104JF	P.CAPACITOR 50V 0.1U	1	
C21-23		ECUM1H103ZFN	C.CAPACITOR CH 50V 0.01U	3	
C25		ECEA0JU471	E.CAPACITOR 6.3V 470U	1	
C26,27		ECUM1H680JCN	C.CAPACITOR CH 50V 68P	2	
C28-33		ECUM1H103ZFN	C.CAPACITOR CH 50V 0.01U	6	
C34		ECUM1E104ZFN	C.CAPACITOR CH 25V 0.1U	1	
C35,36		ECUM1H103ZFN	C.CAPACITOR CH 50V 0.01U	2	
C37		ECEA1CU100	E.CAPACITOR 16V 10U	1	
C38-41		ECUM1E104ZFN	C.CAPACITOR CH 25V 0.1U	4	
C42-47		ECUM1H103ZFN	C.CAPACITOR CH 50V 0.01U	6	
C50		ECUM1H103ZFN	C.CAPACITOR CH 50V 0.01U	1	
C51		ECEA1CU100	E.CAPACITOR 16V 10U	1	
C52		ECUM1E104ZFN	C.CAPACITOR CH 25V 0.1U	1	
C53		ECUM1H103ZFN	C.CAPACITOR CH 50V 0.01U	1	
C75-82		ECUM1H103ZFN	C.CAPACITOR CH 50V 0.01U	8	
C83,84		ECEA1HU010	E.CAPACITOR 50V 1U	2	
C85		ECEA1CN100S	E.CAPACITOR 16V 10U	1	
C86		ECUM1H101JCN	C.CAPACITOR CH 50V 100P	1	
C87		ECUM1H103ZFN	C.CAPACITOR CH 50V 0.01U	1	
C88		ECEA1CN100S	E.CAPACITOR 16V 10U	1	
C89		ECUM1H101JCN	C.CAPACITOR CH 50V 100P	1	
C90		ECUM1H103ZFN	C.CAPACITOR CH 50V 0.01U	1	
C91		ECEA1HU010	E.CAPACITOR 50V 1U	1	
C92		ECUM1H103ZFN	C.CAPACITOR CH 50V 0.01U	1	
C93		ECQP1H392JZ	P.CAPACITOR 50V 3900P	1	
C94		ECEA1HU010	E.CAPACITOR 50V 1U	1	
C95		ECUM1H103ZFN	C.CAPACITOR CH 50V 0.01U	1	
C96-99		ECUM1E104ZFN	C.CAPACITOR CH 25V 0.1U	4	
C100,01		ECUM1E104ZFN	C.CAPACITOR CH 25V 0.1U	2	
C105,06		ECUM1H103ZFN	C.CAPACITOR CH 50V 0.01U	2	
C107		ECUM1E104ZFN	C.CAPACITOR CH 25V 0.1U	1	
C108-14		ECUM1H103ZFN	C.CAPACITOR CH 50V 0.01U	7	
C115		ECUM1E104ZFN	C.CAPACITOR CH 25V 0.1U	1	
C116-19		ECUM1H103ZFN	C.CAPACITOR CH 50V 0.01U	4	
C120		ECEA1HU010	E.CAPACITOR 50V 1U	1	
C121-23		ECUM1H103ZFN	C.CAPACITOR CH 50V 0.01U	3	
C124		ECUM1H150JCN	C.CAPACITOR CH 50V 15P	1	
C125		ECUM1H270JCN	C.CAPACITOR CH 50V 27P	1	
C127-38		ECUM1H103ZFN	C.CAPACITOR CH 50V 0.01U	12	
C140		ECUM1H103ZFN	C.CAPACITOR CH 50V 0.01U	1	
C141		ECEA1HU2R2	E.CAPACITOR 50V 2.2U	1	
C142		ECQM1H154JF	P.CAPACITOR 50V 0.15U	1	
C143		ECQM1H104JF	P.CAPACITOR 50V 0.1U	1	
C147,48		ECUM1H103ZFN	C.CAPACITOR CH 50V 0.01U	2	
C151		ECUM1H103ZFN	C.CAPACITOR CH 50V 0.01U	1	
C154		ECUM1H102JCN	C.CAPACITOR CH 50V 1000P	1	
C500-02		ECEA1EU4R7	E.CAPACITOR 25V 4.7U	3	
C503-05		ECEA1HN2R2S	E.CAPACITOR 50V 2.2U	3	
C506-08		ECEA1EU101	E.CAPACITOR 25V 100U	3	

Ref.No.		Part No.	Part Name & Description	Pcs	Remarks
D1		MA151WA	DIODE	1	
D2		MA153	DIODE	1	
D3		MA151K	DIODE	1	
D4,D5		MA151WA	DIODE	2	
D6-D9		MA151K	DIODE	4	
D10-13		MA151K	DIODE	4	
D15		MA151K	DIODE	1	
D16		MA151WK	DIODE	1	
D17		MA151WA	DIODE	1	
D18,19		MA151K	DIODE	2	
D20		MA151WK	DIODE	1	
D500		MA151K	DIODE	1	
D501-06		10E1	DIODE	6	
D507,08		MA151K	DIODE	2	
D509		10E1	DIODE	1	
D510		MA151WK	DIODE	1	
D511		MA3039-H	DIODE	1	
D512		MA3075-H	DIODE	1	
D513		MA3051-H	DIODE	1	
D514		MA3056-H	DIODE	1	
D515		MA3100-M	DIODE	1	
IC1		MC14024BF	IC	1	
IC2		MC34051M	IC	1	
IC3		TMPZ84C43AF6	IC	1	
IC4		UPD71054GB	IC	1	
IC5		HD64180ZF8	IC	1	
IC6		TL7705CPSB	IC	1	
IC7		VSI0737B	IC	1	
IC8,C9		MC74HC541F	IC	2	
IC10		MBM221220	IC	1	
IC11		VSI0234	IC	1	
IC13		MC74HC4538F	IC	1	
IC14		MC74HC541F	IC	1	
IC15		MC74HC245AF	IC	1	
IC16,17		MC74HC138AF	IC	2	
IC18		MB89363BPF	IC	1	
IC19,20		MC14094BF	IC	2	
IC21		MB89363BPF	IC	1	
IC24		MC14013BF	IC	1	
IC25,26		MC14027BF	IC	2	
IC27-29		MC14538BF	IC	3	
IC30		MB621176PF	IC	1	
IC31		MB89363BPF	IC	1	
IC32,33		MC14021BF	IC	2	
IC34		MC14094BF	IC	1	
IC35		MB89363BPF	IC	1	
IC36-41		MC14021BF	IC	6	
IC42		MB89363BPF	IC	1	
IC43,44		MC14094BF	IC	2	
IC45		MC14021BF	IC	1	
IC46		M50455-001SP	IC	1	
IC47,48		MC14050BF	IC	2	
IC49		SN74LS38NS	IC	1	
IC50,51		MC74HC132F	IC	2	
IC52		MC74HC04AF	IC	1	
IC53,54		MC14049UBF	IC	2	
IC55		MC74HC00AF	IC	1	
IC56		M74F32FP	IC	1	
IC57		MN4030BS	IC	1	
IC58		MC74HC541F	IC	1	
IC59		LM2903M	IC	1	
IC60,61		NJM2901M	IC	2	
IC62		MC74HC00AF	IC	1	
IC63		MC74HC138AF	IC	1	
IC64,65		MC14021BF	IC	2	
IC66,67		MC14094BF	IC	2	
IC68		MB89363BPF	IC	1	
IC69		TC74HC190AF	IC	1	
IC71		MC14538BF	IC	1	
IC72		MC74HC86F	IC	1	

Refer to the P.C.BOARDS LIST, page 6-1-1, before using this page.

Ref.No.		Part No.	Part Name & Description	Pcs	Remarks
IC75		MN4030BS	IC	1	
IC500		PU3124	IC	1	
IC501		PU4124	IC	1	
IC502,03		BA6238AU2M	IC	2	
IC7S		VJS2336A032	CONNECTOR (FEMALE)	1	
IC10S		VJS2336A018	CONNECTOR (FEMALE)	1	
L1		VLP0017	COIL	1	
L2		VLQEL05S150J	COIL 15UH	1	
Q1		2SB710	TRANSISTOR	1	(Q,R)
Q2		DTC144EK	TRANSISTOR-RESISTOR	1	
Q3,Q4		DTC114YK	TRANSISTOR-RESISTOR	2	
Q5		UN2214	TRANSISTOR-RESISTOR	1	
Q15		2SB710	TRANSISTOR	1	(Q,R)
Q16		2SD602	TRANSISTOR	1	(Q,R)
Q17-22		DTC144EK	TRANSISTOR-RESISTOR	6	
Q25-47		DTC144EK	TRANSISTOR-RESISTOR	23	
Q48		2SD946A	TRANSISTOR	1	
Q49		DTC144EK	TRANSISTOR-RESISTOR	1	
Q500,01		UN2213	TRANSISTOR-RESISTOR	2	
Q502,03		2SB709	TRANSISTOR CHIP	2	(Q,R)
Q504		UN2213	TRANSISTOR-RESISTOR	1	
Q505,06		2SB709	TRANSISTOR CHIP	2	(Q,R)
Q507		UN2213	TRANSISTOR-RESISTOR	1	
Q508,09		2SB709	TRANSISTOR CHIP	2	(Q,R)
Q510-14		UN2213	TRANSISTOR-RESISTOR	5	
Q515		2SB709	TRANSISTOR CHIP	1	(Q,R)
			RESISTORS		
R1		ERJ6GEYJ223	M.RESISTOR CH 1/10W 22K	1	
R2		ERJ6GEY0R00	M.RESISTOR CH 1/10W 0	1	
R3		ERJ6GEYJ223	M.RESISTOR CH 1/10W 22K	1	
R4		ERJ6GEY0R00	M.RESISTOR CH 1/10W 0	1	
R5		ERJ6GEYJ562	M.RESISTOR CH 1/10W 5.6K	1	
R6		ERJ6GEYJ103	M.RESISTOR CH 1/10W 10K	1	
R7-R9		ERJ6GEYJ681	M.RESISTOR CH 1/10W 680	3	
R10		ERJ6GEYJ473	M.RESISTOR CH 1/10W 47K	1	
R11		ERJ6GEYJ152	M.RESISTOR CH 1/10W 1.5K	1	
R12		ERJ6GEYJ101	M.RESISTOR CH 1/10W 100	1	
R13,14		ERJ6GEYJ152	M.RESISTOR CH 1/10W 1.5K	2	
R15		ERJ6GEYJ101	M.RESISTOR CH 1/10W 100	1	
R16		ERJ6GEYJ152	M.RESISTOR CH 1/10W 1.5K	1	
R17		ERJ6GEYJ473	M.RESISTOR CH 1/10W 47K	1	
R18		ERJ6GEYJ472	M.RESISTOR CH 1/10W 4.7K	1	
R19-22		ERJ6GEYJ473	M.RESISTOR CH 1/10W 47K	4	
R23-31		ERJ6GEYJ103	M.RESISTOR CH 1/10W 10K	9	
R32		ERJ6GEYJ472	M.RESISTOR CH 1/10W 4.7K	1	
R33		ERJ6GEYJ102	M.RESISTOR CH 1/10W 1K	1	
R34		ERJ6GEYJ103	M.RESISTOR CH 1/10W 10K	1	
R35		ERJ6GEYJ473	M.RESISTOR CH 1/10W 47K	1	
R36		ERJ6GEYJ103	M.RESISTOR CH 1/10W 10K	1	
R37-47		ERJ6GEYJ473	M.RESISTOR CH 1/10W 47K	11	
R48		ERJ6GEYJ474	M.RESISTOR CH 1/10W 470K	1	
R49		ERJ6GEYJ103	M.RESISTOR CH 1/10W 10K	1	
R50		ERJ6GEYJ223	M.RESISTOR CH 1/10W 22K	1	
R51,52		ERJ6GEYJ473	M.RESISTOR CH 1/10W 47K	2	
R53		ERJ6GEYJ223	M.RESISTOR CH 1/10W 22K	1	
R54-72		ERJ6GEYJ103	M.RESISTOR CH 1/10W 10K	19	
R73-77		ERJ6GEYJ473	M.RESISTOR CH 1/10W 47K	5	
R79		ERJ6GEYJ473	M.RESISTOR CH 1/10W 47K	1	
R81-85		ERJ6GEYJ473	M.RESISTOR CH 1/10W 47K	5	
R86,87		ERJ6GEYJ223	M.RESISTOR CH 1/10W 22K	2	
R88		ERJ6GEYJ473	M.RESISTOR CH 1/10W 47K	1	
R93-96		ERJ6GEYJ473	M.RESISTOR CH 1/10W 47K	4	
R97		ERJ6GEYJ101	M.RESISTOR CH 1/10W 100	1	
R100		ERJ6GEYJ101	M.RESISTOR CH 1/10W 100	1	
R101		ERJ6GEYJ473	M.RESISTOR CH 1/10W 47K	1	
R102,03		ERJ6GEYJ101	M.RESISTOR CH 1/10W 100	2	

Ref.No.		Part No.	Part Name & Description	Pcs	Remarks
R104		ERJ6GEYJ223	M.RESISTOR CH 1/10W 22K	1	
R105		ERJ6GEYJ103	M.RESISTOR CH 1/10W 10K	1	
R106		ERJ6GEYJ474	M.RESISTOR CH 1/10W 470K	1	
R107-22		ERJ6GEYJ103	M.RESISTOR CH 1/10W 10K	16	
R123-25		ERJ6GEYJ101	M.RESISTOR CH 1/10W 100	3	
R126,27		ERJ6GEYJ562	M.RESISTOR CH 1/10W 5.6K	2	
R128		ERJ6GEYJ472	M.RESISTOR CH 1/10W 4.7K	1	
R129		ERJ6GEYJ223	M.RESISTOR CH 1/10W 22K	1	
R130-32		ERJ6GEYJ473	M.RESISTOR CH 1/10W 47K	3	
R133,34		ERJ6GEYJ562	M.RESISTOR CH 1/10W 5.6K	2	
R136		ERJ6GEYJ223	M.RESISTOR CH 1/10W 22K	1	
R137-43		ERJ6GEYJ473	M.RESISTOR CH 1/10W 47K	7	
R144		ERJ6GEYJ332	M.RESISTOR CH 1/10W 3.3K	1	
R145		ERJ6GEYJ101	M.RESISTOR CH 1/10W 100	1	
R146		ERJ6GEYJ223	M.RESISTOR CH 1/10W 22K	1	
R147		ERJ6GEYJ332	M.RESISTOR CH 1/10W 3.3K	1	
R148		ERJ6GEYJ101	M.RESISTOR CH 1/10W 100	1	
R149		ERJ6GEYJ102	M.RESISTOR CH 1/10W 1K	1	
R150		ERJ6GEYJ332	M.RESISTOR CH 1/10W 3.3K	1	
R151		ERJ6GEYJ101	M.RESISTOR CH 1/10W 100	1	
R152		ERJ6GEYJ223	M.RESISTOR CH 1/10W 22K	1	
R153		ERJ6GEYJ332	M.RESISTOR CH 1/10W 3.3K	1	
R154		ERJ6GEYJ101	M.RESISTOR CH 1/10W 100	1	
R155		ERJ6GEYJ102	M.RESISTOR CH 1/10W 1K	1	
R156,57		ERJ6GEYJ104	M.RESISTOR CH 1/10W 100K	2	
R158		ERJ6GEYJ332	M.RESISTOR CH 1/10W 3.3K	1	
R159		ERJ6GEYJ103	M.RESISTOR CH 1/10W 10K	1	
R160,61		ERJ6GEYJ102	M.RESISTOR CH 1/10W 1K	2	
R162		ERJ6GEYJ332	M.RESISTOR CH 1/10W 3.3K	1	
R163		ERJ6GEYJ103	M.RESISTOR CH 1/10W 10K	1	
R164		ERJ6GEYJ105	M.RESISTOR CH 1/10W 1M	1	
R165		ERJ6GEYJ223	M.RESISTOR CH 1/10W 22K	1	
R166		ERJ6GEYJ105	M.RESISTOR CH 1/10W 1M	1	
R167		ERJ6GEYJ223	M.RESISTOR CH 1/10W 22K	1	
R168,69		ERJ6GEYJ103	M.RESISTOR CH 1/10W 10K	2	
R170		ERJ6GEYJ104	M.RESISTOR CH 1/10W 100K	1	
R171		VRE0034E623	M.RESISTOR CH 1/10W 62K	1	
R172		ERJ6GEYJ104	M.RESISTOR CH 1/10W 100K	1	
R173-83		ERJ6GEYJ103	M.RESISTOR CH 1/10W 10K	11	
R184-86		ERJ6GEYJ473	M.RESISTOR CH 1/10W 47K	3	
R187-91		ERJ6GEYJ103	M.RESISTOR CH 1/10W 10K	5	
R192,93		ERJ6GEYJ101	M.RESISTOR CH 1/10W 100	2	
R194-01		ERJ6GEYJ103	M.RESISTOR CH 1/10W 10K	8	
R202		ERJ6GEYJ473	M.RESISTOR CH 1/10W 47K	1	
R203-06		ERJ6GEYJ103	M.RESISTOR CH 1/10W 10K	4	
R207,08		ERJ6GEYJ223	M.RESISTOR CH 1/10W 22K	2	
R209,10		ERJ6GEYJ122	M.RESISTOR CH 1/10W 1.2K	2	
R211		ERJ6GEYJ101	M.RESISTOR CH 1/10W 100	1	
R212		ERJ6GEYJ474	M.RESISTOR CH 1/10W 470K	1	
R213		ERJ6GEYJ103	M.RESISTOR CH 1/10W 10K	1	
R214		ERJ6GEYJ223	M.RESISTOR CH 1/10W 22K	1	
R215		ERJ6GEYJ473	M.RESISTOR CH 1/10W 47K	1	
R216,17		ERJ6GEYJ223	M.RESISTOR CH 1/10W 22K	2	
R218,19		ERJ6GEYJ101	M.RESISTOR CH 1/10W 100	2	
R220		ERJ6GEYJ223	M.RESISTOR CH 1/10W 22K	1	
R221		ERJ6GEYJ101	M.RESISTOR CH 1/10W 100	1	
R222		ERJ6GEYJ474	M.RESISTOR CH 1/10W 470K	1	
R223		ERJ6GEYJ103	M.RESISTOR CH 1/10W 10K	1	
R224		ERJ6GEYJ223	M.RESISTOR CH 1/10W 22K	1	
R225		ERJ6GEYJ102	M.RESISTOR CH 1/10W 1K	1	
R226		ERJ6GEYJ473	M.RESISTOR CH 1/10W 47K	1	
R227		ERJ6GEYJ103	M.RESISTOR CH 1/10W 10K	1	
R228		ERJ6GEYJ223	M.RESISTOR CH 1/10W 22K	1	
R229		ERJ6GEYJ473	M.RESISTOR CH 1/10W 47K	1	
R230		ERJ6GEYJ103	M.RESISTOR CH 1/10W 10K	1	
R231		ERJ6GEYJ101	M.RESISTOR CH 1/10W 100	1	
R232		ERJ6GEYJ223	M.RESISTOR CH 1/10W 22K	1	
R233,34		ERJ6GEYJ473	M.RESISTOR CH 1/10W 47K	2	
R235		ERJ6GEYJ223	M.RESISTOR CH 1/10W 22K	1	
R236-39		ERJ6GEYJ473	M.RESISTOR CH 1/10W 47K	4	
R240		ERJ6GEYJ103	M.RESISTOR CH 1/10W 10K	1	
R241-45		ERJ6GEYJ473	M.RESISTOR CH 1/10W 47K	5	
R247		ERJ6GEYJ103	M.RESISTOR CH 1/10W 10K	1	
R248,49		ERJ6GEYJ102	M.RESISTOR CH 1/10W 1K	2	
R250		ERJ6GEYJ223	M.RESISTOR CH 1/10W 22K	1	

Refer to the P.C.BOARDS LIST, page 6-1-1, before using this page.

Ref.No.		Part No.	Part Name & Description	Pcs	Remarks
R251		ERJ6GEYJ123	M.RESISTOR CH 1/10W 12K	1	
R252		ERJ6GEYJ103	M.RESISTOR CH 1/10W 10K	1	
R253		ERJ6GEYJ393	M.RESISTOR CH 1/10W 39K	1	
R254		ERJ6GEYJ223	M.RESISTOR CH 1/10W 22K	1	
R255		ERJ6GEYJ562	M.RESISTOR CH 1/10W 5.6K	1	
R256		ERJ6GEYJ223	M.RESISTOR CH 1/10W 22K	1	
R257		ERJ6GEYJ473	M.RESISTOR CH 1/10W 47K	1	
R258		ERJ6GEYJ103	M.RESISTOR CH 1/10W 10K	1	
R259,60		ERJ6GEYJ223	M.RESISTOR CH 1/10W 22K	2	
R261		ERJ6GEYJ183	M.RESISTOR CH 1/10W 18K	1	
R262		ERJ6GEYJ103	M.RESISTOR CH 1/10W 10K	1	
R263		ERJ6GEYJ333	M.RESISTOR CH 1/10W 33K	1	
R264,65		ERJ6GEYJ473	M.RESISTOR CH 1/10W 47K	2	
R266,67		ERJ6GEYJ101	M.RESISTOR CH 1/10W 100	2	
R269		ERJ6GEYJ103	M.RESISTOR CH 1/10W 10K	1	
R270		ERJ6GEYJ101	M.RESISTOR CH 1/10W 100	1	
R272-77		ERJ6GEYJ103	M.RESISTOR CH 1/10W 10K	6	
R278-85		ERJ6GEYJ473	M.RESISTOR CH 1/10W 47K	8	
R286		ERJ6GEYJ103	M.RESISTOR CH 1/10W 10K	1	
R287		ERJ6GEYJ223	M.RESISTOR CH 1/10W 22K	1	
R288,89		ERJ6GEYJ103	M.RESISTOR CH 1/10W 10K	2	
R290		ERJ6GEYJ473	M.RESISTOR CH 1/10W 47K	1	
R294		ERJ6GEYJ103	M.RESISTOR CH 1/10W 10K	1	
R295		ERJ6GEYJ564	M.RESISTOR CH 1/10W 560K	1	
R296		ERJ6GEYJ473	M.RESISTOR CH 1/10W 47K	1	
R301		ERJ6GEYJ563	M.RESISTOR CH 1/10W 56K	1	
R302,03		ERJ6GEYJ333	M.RESISTOR CH 1/10W 33K	2	
R304		ERJ6GEYJ473	M.RESISTOR CH 1/10W 47K	1	
R502		ERJ6GEYJ122	M.RESISTOR CH 1/10W 1.2K	1	
R504		ERJ6GEYJ222	M.RESISTOR CH 1/10W 2.2K	1	
R505		ERJ6GEYJ223	M.RESISTOR CH 1/10W 22K	1	
R506		ERJ6GEYJ103	M.RESISTOR CH 1/10W 10K	1	
R507		ERJ6GEYJ102	M.RESISTOR CH 1/10W 1K	1	
R508		ERJ6GEYJ104	M.RESISTOR CH 1/10W 100K	1	
R509		ERJ6GEYJ103	M.RESISTOR CH 1/10W 10K	1	
R510		ERJ6GEYJ223	M.RESISTOR CH 1/10W 22K	1	
R511		ERJ6GEYJ102	M.RESISTOR CH 1/10W 1K	1	
R512		ERJ6GEYJ104	M.RESISTOR CH 1/10W 100K	1	
R513		ERJ6GEYJ222	M.RESISTOR CH 1/10W 2.2K	1	
R514		ERJ6GEYJ223	M.RESISTOR CH 1/10W 22K	1	
R515		ERJ6GEYJ103	M.RESISTOR CH 1/10W 10K	1	
R516		ERJ6GEYJ102	M.RESISTOR CH 1/10W 1K	1	
R517		ERJ6GEYJ104	M.RESISTOR CH 1/10W 100K	1	
R518		ERJ6GEYJ223	M.RESISTOR CH 1/10W 22K	1	
R519		ERJ6GEYJ103	M.RESISTOR CH 1/10W 10K	1	
R520		ERJ6GEYJ102	M.RESISTOR CH 1/10W 1K	1	
R521		ERJ6GEYJ104	M.RESISTOR CH 1/10W 100K	1	
R522		ERJ6GEYJ222	M.RESISTOR CH 1/10W 2.2K	1	
R523		ERJ6GEYJ223	M.RESISTOR CH 1/10W 22K	1	
R524		ERJ6GEYJ103	M.RESISTOR CH 1/10W 10K	1	
R525		ERJ6GEYJ102	M.RESISTOR CH 1/10W 1K	1	
R526		ERJ6GEYJ104	M.RESISTOR CH 1/10W 100K	1	
R527		ERJ6GEYJ223	M.RESISTOR CH 1/10W 22K	1	
R528		ERJ6GEYJ103	M.RESISTOR CH 1/10W 10K	1	
R529		ERJ6GEYJ102	M.RESISTOR CH 1/10W 1K	1	
R530		ERJ6GEYJ104	M.RESISTOR CH 1/10W 100K	1	
R531,32		ERX1SJ1R0	M.RESISTOR 1W 1.0	2	
R533		ERJ6GEYJ104	M.RESISTOR CH 1/10W 100K	1	
R536		ERJ6GEYJ562	M.RESISTOR CH 1/10W 5.6K	1	
R537		ERJ6GEYJ222	M.RESISTOR CH 1/10W 2.2K	1	
R538		ERJ6GEYJ103	M.RESISTOR CH 1/10W 10K	1	
R539		ERJ6GEYJ223	M.RESISTOR CH 1/10W 22K	1	
R540		ERJ6GEYJ102	M.RESISTOR CH 1/10W 1K	1	
R541		ERJ6GEYJ104	M.RESISTOR CH 1/10W 100K	1	
R542		ERJ6GEYJ272	M.RESISTOR CH 1/10W 2.7K	1	
R543		ERJ6GEYJ271	M.RESISTOR CH 1/10W 270	1	
SW1,W2		VSS0223	SWITCH	2	
SW3		VSR0045	SWITCH	1	
SW4-W6		EVQQEJ06K	SWITCH	3	
SW7		VST0096	SWITCH	1	

Ref.No.		Part No.	Part Name & Description	Pcs	Remarks
TP17-19		VJR0646	TEST POINT	3	
TPG1,G2		VJR0646	TEST POINT	2	
VC1		ECV1ZW20X60	V.CAPACITOR 20P	1	
X1		VSX0373	CRYSTAL OSCILLATOR	1	
			MISCELLANEOUS		
		VML2143	CARD PULLER	1	
		VML2144	CARD PULLER	1	
		VMS4174	PIN	4	
		VMZ1548	BARRIER	1	
		VSC3057	SHIELD CASE	1	
		VSC3058	SHIELD CASE	1	
		VSC3059	SHIELD CASE	1	
		VXA3967	P.C.B. SHIELD PALTE	1	
		XNG26E	NUT	4	
		XNG3ES	NUT	2	
		XSN3+6S	SCREW	2	
		XYNV3+K6FR	SCREW	4	
		XYN26+C10	SCREW	1	

Ref.No.		Part No.	Part Name & Description	Pcs	Remarks
	■	VEP86088F	P.C.BOARD W/COMPONENT		FOR AU-63-E,B
			B1 SYSTEM CONTROL		
B1L		VJP2899B096	CONNECTOR(MALE)	1	
B1R		VJP2899B096	CONNECTOR(MALE)	1	
			CAPACITORS		
C1,C2		ECUM1H331JCN	C.CAPACITOR CH 50V 330P	2	
C3-C5		ECUM1H102JCN	C.CAPACITOR CH 50V 1000P	3	
C6-C9		ECUM1H103ZFN	C.CAPACITOR CH 50V 0.01U	4	
C10		ECEA0JU221	E.CAPACITOR 6.3V 220U	1	
C11		ECEA0JU101	E.CAPACITOR 6.3V 100U	1	
C12,13		ECUM1E104ZFN	C.CAPACITOR CH 25V 0.1U	2	
C14,15		ECUM1H270JCN	C.CAPACITOR CH 50V 27P	2	
C16-18		ECUM1H103ZFN	C.CAPACITOR CH 50V 0.01U	3	
C19		ECEA1HU3R3	E.CAPACITOR 50V 3.3U	1	
C20		ECQM1H104JF	P.CAPACITOR 50V 0.1U	1	
C21-23		ECUM1H103ZFN	C.CAPACITOR CH 50V 0.01U	3	
C25		ECEA0JU471	E.CAPACITOR 6.3V 470U	1	
C26,27		ECUM1H680JCN	C.CAPACITOR CH 50V 68P	2	
C28-33		ECUM1H103ZFN	C.CAPACITOR CH 50V 0.01U	6	
C34		ECUM1E104ZFN	C.CAPACITOR CH 25V 0.1U	1	
C35,36		ECUM1H103ZFN	C.CAPACITOR CH 50V 0.01U	2	
C37		ECEA1CU100	E.CAPACITOR 16V 10U	1	
C38-41		ECUM1E104ZFN	C.CAPACITOR CH 25V 0.1U	4	
C42-47		ECUM1H103ZFN	C.CAPACITOR CH 50V 0.01U	6	
C50		ECUM1H103ZFN	C.CAPACITOR CH 50V 0.01U	1	
C51		ECEA1CU100	E.CAPACITOR 16V 10U	1	
C52		ECUM1E104ZFN	C.CAPACITOR CH 25V 0.1U	1	
C53		ECUM1H103ZFN	C.CAPACITOR CH 50V 0.01U	1	
C75-82		ECUM1H103ZFN	C.CAPACITOR CH 50V 0.01U	8	
C83,84		ECEA1HU010	E.CAPACITOR 50V 1U	2	
C85		ECEA1CN100S	E.CAPACITOR 16V 10U	1	
C86		ECUM1H101JCN	C.CAPACITOR CH 50V 100P	1	
C87		ECUM1H103ZFN	C.CAPACITOR CH 50V 0.01U	1	
C88		ECEA1CN100S	E.CAPACITOR 16V 10U	1	
C89		ECUM1H101JCN	C.CAPACITOR CH 50V 100P	1	
C90		ECUM1H103ZFN	C.CAPACITOR CH 50V 0.01U	1	
C91		ECEA1HU010	E.CAPACITOR 50V 1U	1	
C92		ECUM1H103ZFN	C.CAPACITOR CH 50V 0.01U	1	
C93		ECQP1H392JZ	P.CAPACITOR 50V 3900P	1	
C94		ECEA1HU010	E.CAPACITOR 50V 1U	1	
C95		ECUM1H103ZFN	C.CAPACITOR CH 50V 0.01U	1	
C96-99		ECUM1E104ZFN	C.CAPACITOR CH 25V 0.1U	4	
C100,01		ECUM1E104ZFN	C.CAPACITOR CH 25V 0.1U	2	
C105,06		ECUM1H103ZFN	C.CAPACITOR CH 50V 0.01U	2	
C107		ECUM1E104ZFN	C.CAPACITOR CH 25V 0.1U	1	
C108-14		ECUM1H103ZFN	C.CAPACITOR CH 50V 0.01U	7	
C115		ECUM1E104ZFN	C.CAPACITOR CH 25V 0.1U	1	
C116-19		ECUM1H103ZFN	C.CAPACITOR CH 50V 0.01U	4	
C120		ECEA1HU010	E.CAPACITOR 50V 1U	1	
C121-23		ECUM1H103ZFN	C.CAPACITOR CH 50V 0.01U	3	
C124		ECUM1H150JCN	C.CAPACITOR CH 50V 15P	1	
C125		ECUM1H270JCN	C.CAPACITOR CH 50V 27P	1	
C127-38		ECUM1H103ZFN	C.CAPACITOR CH 50V 0.01U	12	
C140		ECUM1H103ZFN	C.CAPACITOR CH 50V 0.01U	1	
C141		ECEA1HU2R2	E.CAPACITOR 50V 2.2U	1	
C142		ECQM1H154JF	P.CAPACITOR 50V 0.15U	1	
C143		ECQM1H104JF	P.CAPACITOR 50V 0.1U	1	
C147,48		ECUM1H103ZFN	C.CAPACITOR CH 50V 0.01U	2	
C151		ECUM1H103ZFN	C.CAPACITOR CH 50V 0.01U	1	
C154		ECUM1H102JCN	C.CAPACITOR CH 50V 1000P	1	
C500-02		ECEA1EU4R7	E.CAPACITOR 25V 4.7U	3	
C503-05		ECEA1HN2R2S	E.CAPACITOR 50V 2.2U	3	
C506-08		ECEA1EU101	E.CAPACITOR 25V 100U	3	

Ref.No.		Part No.	Part Name & Description	Pcs	Remarks
D1		MA151WA	DIODE	1	
D2		MA153	DIODE	1	
D3		MA151K	DIODE	1	
D4,D5		MA151WA	DIODE	2	
D7-D9		MA151K	DIODE	3	
D10-13		MA151K	DIODE	4	
D15		MA151K	DIODE	1	
D16		MA151WK	DIODE	1	
D17		MA151WA	DIODE	1	
D18,19		MA151K	DIODE	2	
D20		MA151WK	DIODE	1	
D500		MA151K	DIODE	1	
D501-06		10E1	DIODE	6	
D507,08		MA151K	DIODE	2	
D509		10E1	DIODE	1	
D510		MA151WK	DIODE	1	
D511		MA3039-H	DIODE	1	
D512		MA3075-H	DIODE	1	
D513		MA3051-H	DIODE	1	
D514		MA3056-H	DIODE	1	
D515		MA3100-M	DIODE	1	
IC1		MC14024BF	IC	1	
IC2		MC34051M	IC	1	
IC3		TMPZ84C43AF6	IC	1	
IC4		UPD71054GB	IC	1	
IC5		HD64180ZF8	IC	1	
IC6		TL7705CPSB	IC	1	
IC7		VSI0739A	IC	1	
IC8,C9		MC74HC541F	IC	2	
IC10		MBM221220	IC	1	
IC11		VSI0234	IC	1	
IC13		MC74HC4538F	IC	1	
IC14		MC74HC541F	IC	1	
IC15		MC74HC245AF	IC	1	
IC16,17		MC74HC138AF	IC	2	
IC18		MB89363BPF	IC	1	
IC19,20		MC14094BF	IC	2	
IC21		MB89363BPF	IC	1	
IC24		MC14013BF	IC	1	
IC25,26		MC14027BF	IC	2	
IC27-29		MC14538BF	IC	3	
IC30		MB621176PF	IC	1	
IC31		MB89363BPF	IC	1	
IC34		MC14094BF	IC	1	
IC35		MB89363BPF	IC	1	
IC36-41		MC14021BF	IC	6	
IC42		MB89363BPF	IC	1	
IC43,44		MC14094BF	IC	2	
IC45		MC14021BF	IC	1	
IC46		M50455-001SP	IC	1	
IC47,48		MC14050BF	IC	2	
IC49		SN74LS38NS	IC	1	
IC50,51		MC74HC132F	IC	2	
IC52		MC74HC04AF	IC	1	
IC53,54		MC14049UBF	IC	2	
IC55		MC74HC00AF	IC	1	
IC56		M74F32FP	IC	1	
IC57		MN4030BS	IC	1	
IC58		MC74HC541F	IC	1	
IC59		LM2903M	IC	1	
IC60,61		NJM2901M	IC	2	
IC62		MC74HC00AF	IC	1	
IC63		MC74HC138AF	IC	1	
IC64,65		MC14021BF	IC	2	
IC66,67		MC14094BF	IC	2	
IC68		MB89363BPF	IC	1	
IC69		TC74HC190AF	IC	1	
IC71		MC14538BF	IC	1	
IC72		MC74HC86F	IC	1	
IC75		MN4030BS	IC	1	

Refer to the P.C.BOARDS LIST, page 6-1-1, before using this page.

Ref.No.		Part No.	Part Name & Description	Pcs	Remarks
IC500		PU3124	IC	1	
IC501		PU4124	IC	1	
IC502,03		BA6238AU2M	IC	2	
IC7S		VJS2336A032	CONNECTOR (FEMALE)	1	
IC10S		VJS2336A018	CONNECTOR (FEMALE)	1	
L1		VLP0017	COIL	1	
L2		VLQEL05S150J	COIL 15UH	1	
Q1		2SB710	TRANSISTOR	1	(Q,R)
Q2		DTC144EK	TRANSISTOR-RESISTOR	1	
Q3,Q4		DTC114YK	TRANSISTOR-RESISTOR	2	
Q5		UN2214	TRANSISTOR-RESISTOR	1	
Q9		UN2214	TRANSISTOR-RESISTOR	1	
Q15		2SB710	TRANSISTOR	1	(Q,R)
Q16		2SD602	TRANSISTOR	1	(Q,R)
Q17-22		DTC144EK	TRANSISTOR-RESISTOR	6	
Q25-27		DTC144EK	TRANSISTOR-RESISTOR	3	
Q29-35		DTC144EK	TRANSISTOR-RESISTOR	7	
Q38-42		DTC144EK	TRANSISTOR-RESISTOR	5	
Q44		DTC144EK	TRANSISTOR-RESISTOR	1	
Q46,47		DTC144EK	TRANSISTOR-RESISTOR	2	
Q48		2SD946A	TRANSISTOR	1	
Q500,01		UN2213	TRANSISTOR-RESISTOR	2	
Q502,03		2SB709	TRANSISTOR CHIP	2	(Q,R)
Q504		UN2213	TRANSISTOR-RESISTOR	1	
Q505,06		2SB709	TRANSISTOR CHIP	2	(Q,R)
Q507		UN2213	TRANSISTOR-RESISTOR	1	
Q508,09		2SB709	TRANSISTOR CHIP	2	(Q,R)
Q510-14		UN2213	TRANSISTOR-RESISTOR	5	
Q515		2SB709	TRANSISTOR CHIP	1	(Q,R)
			RESISTORS		
R1		ERJ6GEYJ223	M.RESISTOR CH 1/10W 22K	1	
R2		ERJ6GEY0R00	M.RESISTOR CH 1/10W 0	1	
R3		ERJ6GEYJ223	M.RESISTOR CH 1/10W 22K	1	
R4		ERJ6GEY0R00	M.RESISTOR CH 1/10W 0	1	
R5		ERJ6GEYJ562	M.RESISTOR CH 1/10W 5.6K	1	
R6		ERJ6GEYJ103	M.RESISTOR CH 1/10W 10K	1	
R7-R9		ERJ6GEYJ681	M.RESISTOR CH 1/10W 680	3	
R10		ERJ6GEYJ473	M.RESISTOR CH 1/10W 47K	1	
R11		ERJ6GEYJ152	M.RESISTOR CH 1/10W 1.5K	1	
R12		ERJ6GEYJ101	M.RESISTOR CH 1/10W 100	1	
R13,14		ERJ6GEYJ152	M.RESISTOR CH 1/10W 1.5K	2	
R15		ERJ6GEYJ101	M.RESISTOR CH 1/10W 100	1	
R16		ERJ6GEYJ152	M.RESISTOR CH 1/10W 1.5K	1	
R17		ERJ6GEYJ473	M.RESISTOR CH 1/10W 47K	1	
R18		ERJ6GEYJ472	M.RESISTOR CH 1/10W 4.7K	1	
R19-22		ERJ6GEYJ473	M.RESISTOR CH 1/10W 47K	4	
R23-31		ERJ6GEYJ103	M.RESISTOR CH 1/10W 10K	9	
R32		ERJ6GEYJ472	M.RESISTOR CH 1/10W 4.7K	1	
R33		ERJ6GEYJ102	M.RESISTOR CH 1/10W 1K	1	
R34		ERJ6GEYJ103	M.RESISTOR CH 1/10W 10K	1	
R35		ERJ6GEYJ473	M.RESISTOR CH 1/10W 47K	1	
R36		ERJ6GEYJ103	M.RESISTOR CH 1/10W 10K	1	
R37-47		ERJ6GEYJ473	M.RESISTOR CH 1/10W 47K	11	
R48		ERJ6GEYJ474	M.RESISTOR CH 1/10W 470K	1	
R49		ERJ6GEYJ103	M.RESISTOR CH 1/10W 10K	1	
R50		ERJ6GEYJ223	M.RESISTOR CH 1/10W 22K	1	
R51,52		ERJ6GEYJ473	M.RESISTOR CH 1/10W 47K	2	
R53		ERJ6GEYJ223	M.RESISTOR CH 1/10W 22K	1	
R54-72		ERJ6GEYJ103	M.RESISTOR CH 1/10W 10K	19	
R73-77		ERJ6GEYJ473	M.RESISTOR CH 1/10W 47K	5	
R79		ERJ6GEYJ473	M.RESISTOR CH 1/10W 47K	1	
R81-85		ERJ6GEYJ473	M.RESISTOR CH 1/10W 47K	5	
R86,87		ERJ6GEYJ223	M.RESISTOR CH 1/10W 22K	2	
R88		ERJ6GEYJ473	M.RESISTOR CH 1/10W 47K	1	
R93-96		ERJ6GEYJ473	M.RESISTOR CH 1/10W 47K	4	
R97		ERJ6GEYJ101	M.RESISTOR CH 1/10W 100	1	

Ref.No.		Part No.	Part Name & Description	Pcs	Remarks
R100		ERJ6GEYJ101	M.RESISTOR CH 1/10W 100	1	
R101		ERJ6GEYJ473	M.RESISTOR CH 1/10W 47K	1	
R102,03		ERJ6GEYJ101	M.RESISTOR CH 1/10W 100	2	
R104		ERJ6GEYJ223	M.RESISTOR CH 1/10W 22K	1	
R105		ERJ6GEYJ103	M.RESISTOR CH 1/10W 10K	1	
R106		ERJ6GEYJ474	M.RESISTOR CH 1/10W 470K	1	
R107-22		ERJ6GEYJ103	M.RESISTOR CH 1/10W 10K	16	
R123-25		ERJ6GEYJ101	M.RESISTOR CH 1/10W 100	3	
R126,27		ERJ6GEYJ562	M.RESISTOR CH 1/10W 5.6K	2	
R128		ERJ6GEYJ472	M.RESISTOR CH 1/10W 4.7K	1	
R129		ERJ6GEYJ223	M.RESISTOR CH 1/10W 22K	1	
R130-32		ERJ6GEYJ473	M.RESISTOR CH 1/10W 47K	3	
R133,34		ERJ6GEYJ562	M.RESISTOR CH 1/10W 5.6K	2	
R135		ERJ6GEYJ101	M.RESISTOR CH 1/10W 100	1	
R136		ERJ6GEYJ223	M.RESISTOR CH 1/10W 22K	1	
R137-43		ERJ6GEYJ473	M.RESISTOR CH 1/10W 47K	7	
R144		ERJ6GEYJ332	M.RESISTOR CH 1/10W 3.3K	1	
R145		ERJ6GEYJ101	M.RESISTOR CH 1/10W 100	1	
R146		ERJ6GEYJ223	M.RESISTOR CH 1/10W 22K	1	
R147		ERJ6GEYJ332	M.RESISTOR CH 1/10W 3.3K	1	
R148		ERJ6GEYJ101	M.RESISTOR CH 1/10W 100	1	
R149		ERJ6GEYJ102	M.RESISTOR CH 1/10W 1K	1	
R150		ERJ6GEYJ332	M.RESISTOR CH 1/10W 3.3K	1	
R151		ERJ6GEYJ101	M.RESISTOR CH 1/10W 100	1	
R152		ERJ6GEYJ223	M.RESISTOR CH 1/10W 22K	1	
R153		ERJ6GEYJ332	M.RESISTOR CH 1/10W 3.3K	1	
R154		ERJ6GEYJ101	M.RESISTOR CH 1/10W 100	1	
R155		ERJ6GEYJ102	M.RESISTOR CH 1/10W 1K	1	
R156,57		ERJ6GEYJ104	M.RESISTOR CH 1/10W 100K	2	
R158		ERJ6GEYJ332	M.RESISTOR CH 1/10W 3.3K	1	
R159		ERJ6GEYJ103	M.RESISTOR CH 1/10W 10K	1	
R160,61		ERJ6GEYJ102	M.RESISTOR CH 1/10W 1K	2	
R162		ERJ6GEYJ332	M.RESISTOR CH 1/10W 3.3K	1	
R163		ERJ6GEYJ103	M.RESISTOR CH 1/10W 10K	1	
R164		ERJ6GEYJ105	M.RESISTOR CH 1/10W 1M	1	
R165		ERJ6GEYJ223	M.RESISTOR CH 1/10W 22K	1	
R166		ERJ6GEYJ105	M.RESISTOR CH 1/10W 1M	1	
R167		ERJ6GEYJ223	M.RESISTOR CH 1/10W 22K	1	
R168,69		ERJ6GEYJ103	M.RESISTOR CH 1/10W 10K	2	
R170		ERJ6GEYJ104	M.RESISTOR CH 1/10W 100K	1	
R171		VRE0034E623	M.RESISTOR CH 1/10W 62K	1	
R172		ERJ6GEYJ104	M.RESISTOR CH 1/10W 100K	1	
R173-83		ERJ6GEYJ103	M.RESISTOR CH 1/10W 10K	11	
R184-86		ERJ6GEYJ473	M.RESISTOR CH 1/10W 47K	3	
R187-91		ERJ6GEYJ103	M.RESISTOR CH 1/10W 10K	5	
R192,93		ERJ6GEYJ101	M.RESISTOR CH 1/10W 100	2	
R194-01		ERJ6GEYJ103	M.RESISTOR CH 1/10W 10K	8	
R202		ERJ6GEYJ473	M.RESISTOR CH 1/10W 47K	1	
R203-06		ERJ6GEYJ103	M.RESISTOR CH 1/10W 10K	4	
R207,08		ERJ6GEYJ223	M.RESISTOR CH 1/10W 22K	2	
R209,10		ERJ6GEYJ122	M.RESISTOR CH 1/10W 1.2K	2	
R211		ERJ6GEYJ101	M.RESISTOR CH 1/10W 100	1	
R212		ERJ6GEYJ474	M.RESISTOR CH 1/10W 470K	1	
R213		ERJ6GEYJ103	M.RESISTOR CH 1/10W 10K	1	
R214		ERJ6GEYJ223	M.RESISTOR CH 1/10W 22K	1	
R215		ERJ6GEYJ473	M.RESISTOR CH 1/10W 47K	1	
R216,17		ERJ6GEYJ223	M.RESISTOR CH 1/10W 22K	2	
R218,19		ERJ6GEYJ101	M.RESISTOR CH 1/10W 100	2	
R220		ERJ6GEYJ223	M.RESISTOR CH 1/10W 22K	1	
R221		ERJ6GEYJ101	M.RESISTOR CH 1/10W 100	1	
R222		ERJ6GEYJ474	M.RESISTOR CH 1/10W 470K	1	
R223		ERJ6GEYJ103	M.RESISTOR CH 1/10W 10K	1	
R224		ERJ6GEYJ223	M.RESISTOR CH 1/10W 22K	1	
R225		ERJ6GEYJ102	M.RESISTOR CH 1/10W 1K	1	
R226		ERJ6GEYJ473	M.RESISTOR CH 1/10W 47K	1	
R227		ERJ6GEYJ103	M.RESISTOR CH 1/10W 10K	1	
R228		ERJ6GEYJ223	M.RESISTOR CH 1/10W 22K	1	
R229		ERJ6GEYJ473	M.RESISTOR CH 1/10W 47K	1	
R230		ERJ6GEYJ103	M.RESISTOR CH 1/10W 10K	1	
R231		ERJ6GEYJ101	M.RESISTOR CH 1/10W 100	1	
R232		ERJ6GEYJ223	M.RESISTOR CH 1/10W 22K	1	
R233,34		ERJ6GEYJ473	M.RESISTOR CH 1/10W 47K	2	
R235		ERJ6GEYJ223	M.RESISTOR CH 1/10W 22K	1	
R236-39		ERJ6GEYJ473	M.RESISTOR CH 1/10W 47K	4	
R240		ERJ6GEYJ103	M.RESISTOR CH 1/10W 10K	1	

Refer to the P.C.BOARDS LIST, page 6-1-1, before using this page.

Ref.No.		Part No.	Part Name & Description	Pcs	Remarks
R241-45		ERJ6GEYJ473	M.RESISTOR CH 1/10W 47K	5	
R247		ERJ6GEYJ103	M.RESISTOR CH 1/10W 10K	1	
R248,49		ERJ6GEYJ102	M.RESISTOR CH 1/10W 1K	2	
R250		ERJ6GEYJ223	M.RESISTOR CH 1/10W 22K	1	
R251		ERJ6GEYJ123	M.RESISTOR CH 1/10W 12K	1	
R252		ERJ6GEYJ103	M.RESISTOR CH 1/10W 10K	1	
R253		ERJ6GEYJ393	M.RESISTOR CH 1/10W 39K	1	
R254		ERJ6GEYJ223	M.RESISTOR CH 1/10W 22K	1	
R255		ERJ6GEYJ562	M.RESISTOR CH 1/10W 5.6K	1	
R256		ERJ6GEYJ223	M.RESISTOR CH 1/10W 22K	1	
R257		ERJ6GEYJ473	M.RESISTOR CH 1/10W 47K	1	
R258		ERJ6GEYJ103	M.RESISTOR CH 1/10W 10K	1	
R259,60		ERJ6GEYJ223	M.RESISTOR CH 1/10W 22K	2	
R261		ERJ6GEYJ183	M.RESISTOR CH 1/10W 18K	1	
R262		ERJ6GEYJ103	M.RESISTOR CH 1/10W 10K	1	
R263		ERJ6GEYJ333	M.RESISTOR CH 1/10W 33K	1	
R264,65		ERJ6GEYJ473	M.RESISTOR CH 1/10W 47K	2	
R266-68		ERJ6GEYJ101	M.RESISTOR CH 1/10W 100	3	
R269		ERJ6GEYJ103	M.RESISTOR CH 1/10W 10K	1	
R270		ERJ6GEYJ101	M.RESISTOR CH 1/10W 100	1	
R272-77		ERJ6GEYJ103	M.RESISTOR CH 1/10W 10K	6	
R278-85		ERJ6GEYJ473	M.RESISTOR CH 1/10W 47K	8	
R286		ERJ6GEYJ103	M.RESISTOR CH 1/10W 10K	1	
R287		ERJ6GEYJ223	M.RESISTOR CH 1/10W 22K	1	
R288,89		ERJ6GEYJ103	M.RESISTOR CH 1/10W 10K	2	
R290		ERJ6GEYJ473	M.RESISTOR CH 1/10W 47K	1	
R291,92		ERJ6GEYJ101	M.RESISTOR CH 1/10W 100	2	
R294		ERJ6GEYJ103	M.RESISTOR CH 1/10W 10K	1	
R295		ERJ6GEYJ564	M.RESISTOR CH 1/10W 560K	1	
R296		ERJ6GEYJ473	M.RESISTOR CH 1/10W 47K	1	
R301		ERJ6GEYJ563	M.RESISTOR CH 1/10W 56K	1	
R302,03		ERJ6GEYJ333	M.RESISTOR CH 1/10W 33K	2	
R304		ERJ6GEYJ473	M.RESISTOR CH 1/10W 47K	1	
R502		ERJ6GEYJ122	M.RESISTOR CH 1/10W 1.2K	1	
R504		ERJ6GEYJ222	M.RESISTOR CH 1/10W 2.2K	1	
R505		ERJ6GEYJ223	M.RESISTOR CH 1/10W 22K	1	
R506		ERJ6GEYJ103	M.RESISTOR CH 1/10W 10K	1	
R507		ERJ6GEYJ102	M.RESISTOR CH 1/10W 1K	1	
R508		ERJ6GEYJ104	M.RESISTOR CH 1/10W 100K	1	
R509		ERJ6GEYJ103	M.RESISTOR CH 1/10W 10K	1	
R510		ERJ6GEYJ223	M.RESISTOR CH 1/10W 22K	1	
R511		ERJ6GEYJ102	M.RESISTOR CH 1/10W 1K	1	
R512		ERJ6GEYJ104	M.RESISTOR CH 1/10W 100K	1	
R513		ERJ6GEYJ222	M.RESISTOR CH 1/10W 2.2K	1	
R514		ERJ6GEYJ223	M.RESISTOR CH 1/10W 22K	1	
R515		ERJ6GEYJ103	M.RESISTOR CH 1/10W 10K	1	
R516		ERJ6GEYJ102	M.RESISTOR CH 1/10W 1K	1	
R517		ERJ6GEYJ104	M.RESISTOR CH 1/10W 100K	1	
R518		ERJ6GEYJ223	M.RESISTOR CH 1/10W 22K	1	
R519		ERJ6GEYJ103	M.RESISTOR CH 1/10W 10K	1	
R520		ERJ6GEYJ102	M.RESISTOR CH 1/10W 1K	1	
R521		ERJ6GEYJ104	M.RESISTOR CH 1/10W 100K	1	
R522		ERJ6GEYJ222	M.RESISTOR CH 1/10W 2.2K	1	
R523		ERJ6GEYJ223	M.RESISTOR CH 1/10W 22K	1	
R524		ERJ6GEYJ103	M.RESISTOR CH 1/10W 10K	1	
R525		ERJ6GEYJ102	M.RESISTOR CH 1/10W 1K	1	
R526		ERJ6GEYJ104	M.RESISTOR CH 1/10W 100K	1	
R527		ERJ6GEYJ223	M.RESISTOR CH 1/10W 22K	1	
R528		ERJ6GEYJ103	M.RESISTOR CH 1/10W 10K	1	
R529		ERJ6GEYJ102	M.RESISTOR CH 1/10W 1K	1	
R530		ERJ6GEYJ104	M.RESISTOR CH 1/10W 100K	1	
R531,32		ERX1SJ1R0	M.RESISTOR 1W 1	2	
R533		ERJ6GEYJ104	M.RESISTOR CH 1/10W 100K	1	
R536		ERJ6GEYJ562	M.RESISTOR CH 1/10W 5.6K	1	
R537		ERJ6GEYJ222	M.RESISTOR CH 1/10W 2.2K	1	
R538		ERJ6GEYJ103	M.RESISTOR CH 1/10W 10K	1	
R539		ERJ6GEYJ223	M.RESISTOR CH 1/10W 22K	1	
R540		ERJ6GEYJ102	M.RESISTOR CH 1/10W 1K	1	
R541		ERJ6GEYJ104	M.RESISTOR CH 1/10W 100K	1	
R542		ERJ6GEYJ272	M.RESISTOR CH 1/10W 2.7K	1	
R543		ERJ6GEYJ271	M.RESISTOR CH 1/10W 270	1	
SW1		VSS0223	SWITCH	1	

Ref.No.		Part No.	Part Name & Description	Pcs	Remarks
SW3		VSR0045	SWITCH	1	
SW4-W6		EVQQEJ06K	SWITCH	3	
SW7		VST0096	SWITCH	1	
TP17-19		VJR0646	TEST POINT	3	
TPG1,G2		VJR0646	TEST POINT	2	
VC1		ECV1ZW20X60	V.CAPACITOR 20P	1	
X1		VSX0373	CRYSTAL OSCILLATOR	1	
			MISCELLANEOUS		
		VML2143	CARD PULLER	1	
		VML2144	CARD PULLER	1	
		VMS4174	PIN	4	
		VMZ1548	BARRIER	1	
		VSC3057	SHIELD CASE	1	
		VSC3058	SHIELD CASE	1	
		VSC3059	SHIELD CASE	1	
		VXA3967	P.C.B. SHIELD PLATE	1	
		XNG26E	NUT	4	
		XNG3ES	NUT	2	
		XSN3+6S	SCREW	2	
		XYNV3+K6FR	SCREW	4	
		XYN26+C10	SCREW	1	

Refer to the P.C.BOARDS LIST, page 6-1-1, before using this page.

Ref.No.		Part No.	Part Name & Description	Pcs	Remarks
	■	VEP86088M	P.C.BOARD W/COMPONENT		FOR AU-62-E,B
			B1 SYSTEM CONTROL		
B1L		VJP2899B096	CONNECTOR(MALE)	1	
B1R		VJP2899B096	CONNECTOR(MALE)	1	
			CAPACITORS		
C1,C2		ECUM1H331JCN	C.CAPACITOR CH 50V 330P	2	
C3-C5		ECUM1H102JCN	C.CAPACITOR CH 50V 1000P	3	
C6-C9		ECUM1H103ZFN	C.CAPACITOR CH 50V 0.01U	4	
C10		ECEA0JU221	E.CAPACITOR 6.3V 220U	1	
C11		ECEA0JU101	E.CAPACITOR 6.3V 100U	1	
C12,13		ECUM1E104ZFN	C.CAPACITOR CH 25V 0.1U	2	
C14,15		ECUM1H270JCN	C.CAPACITOR CH 50V 27P	2	
C16-18		ECUM1H103ZFN	C.CAPACITOR CH 50V 0.01U	3	
C19		ECEA1HU3R3	E.CAPACITOR 50V 3.3U	1	
C20		ECQM1H104JF	P.CAPACITOR 50V 0.1U	1	
C21-23		ECUM1H103ZFN	C.CAPACITOR CH 50V 0.01U	3	
C25		ECEA0JU471	E.CAPACITOR 6.3V 470U	1	
C26,27		ECUM1H680JCN	C.CAPACITOR CH 50V 68P	2	
C28-33		ECUM1H103ZFN	C.CAPACITOR CH 50V 0.01U	6	
C34		ECUM1E104ZFN	C.CAPACITOR CH 25V 0.1U	1	
C35,36		ECUM1H103ZFN	C.CAPACITOR CH 50V 0.01U	2	
C37		ECEA1CU100	E.CAPACITOR 16V 10U	1	
C38-41		ECUM1E104ZFN	C.CAPACITOR CH 25V 0.1U	4	
C42-47		ECUM1H103ZFN	C.CAPACITOR CH 50V 0.01U	6	
C50		ECUM1H103ZFN	C.CAPACITOR CH 50V 0.01U	1	
C51		ECEA1CU100	E.CAPACITOR 16V 10U	1	
C52		ECUM1E104ZFN	C.CAPACITOR CH 25V 0.1U	1	
C53		ECUM1H103ZFN	C.CAPACITOR CH 50V 0.01U	1	
C75-82		ECUM1H103ZFN	C.CAPACITOR CH 50V 0.01U	8	
C83,84		ECEA1HU010	E.CAPACITOR 50V 1U	2	
C85		ECEA1CN100S	E.CAPACITOR 16V 10U	1	
C86		ECUM1H101JCN	C.CAPACITOR CH 50V 100P	1	
C87		ECUM1H103ZFN	C.CAPACITOR CH 50V 0.01U	1	
C88		ECEA1CN100S	E.CAPACITOR 16V 10U	1	
C89		ECUM1H101JCN	C.CAPACITOR CH 50V 100P	1	
C90		ECUM1H103ZFN	C.CAPACITOR CH 50V 0.01U	1	
C91		ECEA1HU010	E.CAPACITOR 50V 1U	1	
C92		ECUM1H103ZFN	C.CAPACITOR CH 50V 0.01U	1	
C93		ECQP1H392JZ	P.CAPACITOR 50V 3900P	1	
C94		ECEA1HU010	E.CAPACITOR 50V 1U	1	
C95		ECUM1H103ZFN	C.CAPACITOR CH 50V 0.01U	1	
C96-99		ECUM1E104ZFN	C.CAPACITOR CH 25V 0.1U	4	
C100,01		ECUM1E104ZFN	C.CAPACITOR CH 25V 0.1U	2	
C105,06		ECUM1H103ZFN	C.CAPACITOR CH 50V 0.01U	2	
C107		ECUM1E104ZFN	C.CAPACITOR CH 25V 0.1U	1	
C108-14		ECUM1H103ZFN	C.CAPACITOR CH 50V 0.01U	7	
C115		ECUM1E104ZFN	C.CAPACITOR CH 25V 0.1U	1	
C116-19		ECUM1H103ZFN	C.CAPACITOR CH 50V 0.01U	4	
C120		ECEA1HU010	E.CAPACITOR 50V 1U	1	
C121-23		ECUM1H103ZFN	C.CAPACITOR CH 50V 0.01U	3	
C124		ECUM1H150JCN	C.CAPACITOR CH 50V 15P	1	
C125		ECUM1H270JCN	C.CAPACITOR CH 50V 27P	1	
C127-38		ECUM1H103ZFN	C.CAPACITOR CH 50V 0.01U	12	
C140		ECUM1H103ZFN	C.CAPACITOR CH 50V 0.01U	1	
C141		ECEA1HU2R2	E.CAPACITOR 50V 2.2U	1	
C142		ECQM1H154JF	P.CAPACITOR 50V 0.15U	1	
C143		ECQM1H104JF	P.CAPACITOR 50V 0.1U	1	
C147,48		ECUM1H103ZFN	C.CAPACITOR CH 50V 0.01U	2	
C151		ECUM1H103ZFN	C.CAPACITOR CH 50V 0.01U	1	
C154		ECUM1H102JCN	C.CAPACITOR CH 50V 1000P	1	
C500-02		ECEA1EU4R7	E.CAPACITOR 25V 4.7U	3	
C503-05		ECEA1HN2R2S	E.CAPACITOR 50V 2.2U	3	
C506-08		ECEA1EU101	E.CAPACITOR 25V 100U	3	

Ref.No.		Part No.	Part Name & Description	Pcs	Remarks
D1		MA151WA	DIODE	1	
D2		MA153	DIODE	1	
D3		MA151K	DIODE	1	
D4,D5		MA151WA	DIODE	2	
D7-D9		MA151K	DIODE	3	
D10-13		MA151K	DIODE	4	
D15		MA151K	DIODE	1	
D16		MA151WK	DIODE	1	
D17		MA151WA	DIODE	1	
D18,19		MA151K	DIODE	2	
D20		MA151WK	DIODE	1	
D500		MA151K	DIODE	1	
D501-06		10E1	DIODE	6	
D507,08		MA151K	DIODE	2	
D509		10E1	DIODE	1	
D510		MA151WK	DIODE	1	
D511		MA3039-H	DIODE	1	
D512		MA3075-H	DIODE	1	
D513		MA3051-H	DIODE	1	
D514		MA3056-H	DIODE	1	
D515		MA3100-M	DIODE	1	
IC1		MC14024BF	IC	1	
IC2		MC34051M	IC	1	
IC3		TMPZ84C43AF6	IC	1	
IC4		UPD71054GB	IC	1	
IC5		HD64180ZF8	IC	1	
IC6		TL7705CPSB	IC	1	
IC7		VSI0738A	IC	1	
IC8,C9		MC74HC541F	IC	2	
IC10		MBM221220	IC	1	
IC11		VSI0234	IC	1	
IC13		MC74HC4538F	IC	1	
IC14		MC74HC541F	IC	1	
IC15		MC74HC245AF	IC	1	
IC16,17		MC74HC138AF	IC	2	
IC18		MB89363BPF	IC	1	
IC19,20		MC14094BF	IC	2	
IC21		MB89363BPF	IC	1	
IC24		MC14013BF	IC	1	
IC25,26		MC14027BF	IC	2	
IC27-29		MC14538BF	IC	3	
IC30		MB621176PF	IC	1	
IC31		MB89363BPF	IC	1	
IC34		MC14094BF	IC	1	
IC35		MB89363BPF	IC	1	
IC36-41		MC14021BF	IC	6	
IC42		MB89363BPF	IC	1	
IC43,44		MC14094BF	IC	2	
IC45		MC14021BF	IC	1	
IC46		M50455-001SP	IC	1	
IC47,48		MC14050BF	IC	2	
IC49		SN74LS38NS	IC	1	
IC50,51		MC74HC132F	IC	2	
IC52		MC74HC04AF	IC	1	
IC53,54		MC14049UBF	IC	2	
IC55		MC74HC00AF	IC	1	
IC56		M74F32FP	IC	1	
IC57		MN4030BS	IC	1	
IC58		MC74HC541F	IC	1	
IC59		LM2903M	IC	1	
IC60,61		NJM2901M	IC	2	
IC62		MC74HC00AF	IC	1	
IC63		MC74HC138AF	IC	1	
IC64,65		MC14021BF	IC	2	
IC66,67		MC14094BF	IC	2	
IC68		MB89363BPF	IC	1	
IC69		TC74HC190AF	IC	1	
IC71		MC14538BF	IC	1	
IC72		MC74HC86F	IC	1	
IC75		MN4030BS	IC	1	

Refer to the P.C.BOARDS LIST, page 6-1-1, before using this page.

Ref.No.		Part No.	Part Name & Description	Pcs	Remarks
IC500		PU3124	IC	1	
IC501		PU4124	IC	1	
IC502,03		BA6238AU2M	IC	2	
IC7S		VJS2336A032	CONNECTOR (FEMALE)	1	
IC10S		VJS2336A018	CONNECTOR (FEMALE)	1	
L1		VLP0017	COIL	1	
L2		VLQEL05S150J	COIL 15UH	1	
Q1		2SB710	TRANSISTOR	1	(Q,R)
Q2		DTC144EK	TRANSISTOR-RESISTOR	1	
Q3,Q4		DTC114YK	TRANSISTOR-RESISTOR	2	
Q5		UN2214	TRANSISTOR-RESISTOR	1	
Q9		UN2214	TRANSISTOR-RESISTOR	1	
Q15		2SB710	TRANSISTOR	1	(Q,R)
Q16		2SD602	TRANSISTOR	1	(Q,R)
Q17-22		DTC144EK	TRANSISTOR-RESISTOR	6	
Q25-27		DTC144EK	TRANSISTOR-RESISTOR	3	
Q29-35		DTC144EK	TRANSISTOR-RESISTOR	7	
Q38-42		DTC144EK	TRANSISTOR-RESISTOR	5	
Q44		DTC144EK	TRANSISTOR-RESISTOR	1	
Q46,47		DTC144EK	TRANSISTOR-RESISTOR	2	
Q48		2SD946A	TRANSISTOR	1	
Q500,01		UN2213	TRANSISTOR-RESISTOR	2	
Q502,03		2SB709	TRANSISTOR CHIP	2	(Q,R)
Q504		UN2213	TRANSISTOR-RESISTOR	1	
Q505,06		2SB709	TRANSISTOR CHIP	2	(Q,R)
Q507		UN2213	TRANSISTOR-RESISTOR	1	
Q508,09		2SB709	TRANSISTOR CHIP	2	(Q,R)
Q510-14		UN2213	TRANSISTOR-RESISTOR	5	
Q515		2SB709	TRANSISTOR CHIP	1	(Q,R)
			RESISTORS		
R1		ERJ6GEYJ223	M.RESISTOR CH 1/10W 22K	1	
R2		ERJ6GEY0R00	M.RESISTOR CH 1/10W 0	1	
R3		ERJ6GEYJ223	M.RESISTOR CH 1/10W 22K	1	
R4		ERJ6GEY0R00	M.RESISTOR CH 1/10W 0	1	
R5		ERJ6GEYJ562	M.RESISTOR CH 1/10W 5.6K	1	
R6		ERJ6GEYJ103	M.RESISTOR CH 1/10W 10K	1	
R7-R9		ERJ6GEYJ681	M.RESISTOR CH 1/10W 680	3	
R10		ERJ6GEYJ473	M.RESISTOR CH 1/10W 47K	1	
R11		ERJ6GEYJ152	M.RESISTOR CH 1/10W 1.5K	1	
R12		ERJ6GEYJ101	M.RESISTOR CH 1/10W 100	1	
R13,14		ERJ6GEYJ152	M.RESISTOR CH 1/10W 1.5K	2	
R15		ERJ6GEYJ101	M.RESISTOR CH 1/10W 100	1	
R16		ERJ6GEYJ152	M.RESISTOR CH 1/10W 1.5K	1	
R17		ERJ6GEYJ473	M.RESISTOR CH 1/10W 47K	1	
R18		ERJ6GEYJ472	M.RESISTOR CH 1/10W 4.7K	1	
R19-22		ERJ6GEYJ473	M.RESISTOR CH 1/10W 47K	4	
R23-31		ERJ6GEYJ103	M.RESISTOR CH 1/10W 10K	9	
R32		ERJ6GEYJ472	M.RESISTOR CH 1/10W 4.7K	1	
R33		ERJ6GEYJ102	M.RESISTOR CH 1/10W 1K	1	
R34		ERJ6GEYJ103	M.RESISTOR CH 1/10W 10K	1	
R35		ERJ6GEYJ473	M.RESISTOR CH 1/10W 47K	1	
R36		ERJ6GEYJ103	M.RESISTOR CH 1/10W 10K	1	
R37-47		ERJ6GEYJ473	M.RESISTOR CH 1/10W 47K	11	
R48		ERJ6GEYJ474	M.RESISTOR CH 1/10W 470K	1	
R49		ERJ6GEYJ103	M.RESISTOR CH 1/10W 10K	1	
R50		ERJ6GEYJ223	M.RESISTOR CH 1/10W 22K	1	
R51,52		ERJ6GEYJ473	M.RESISTOR CH 1/10W 47K	2	
R53		ERJ6GEYJ223	M.RESISTOR CH 1/10W 22K	1	
R54-72		ERJ6GEYJ103	M.RESISTOR CH 1/10W 10K	19	
R73-77		ERJ6GEYJ473	M.RESISTOR CH 1/10W 47K	5	
R79		ERJ6GEYJ473	M.RESISTOR CH 1/10W 47K	1	
R81-85		ERJ6GEYJ473	M.RESISTOR CH 1/10W 47K	5	
R86,87		ERJ6GEYJ223	M.RESISTOR CH 1/10W 22K	2	
R88		ERJ6GEYJ473	M.RESISTOR CH 1/10W 47K	1	
R93-96		ERJ6GEYJ473	M.RESISTOR CH 1/10W 47K	4	
R97		ERJ6GEYJ101	M.RESISTOR CH 1/10W 100	1	

Ref.No.		Part No.	Part Name & Description	Pcs	Remarks
R100		ERJ6GEYJ101	M.RESISTOR CH 1/10W 100	1	
R101		ERJ6GEYJ473	M.RESISTOR CH 1/10W 47K	1	
R102,03		ERJ6GEYJ101	M.RESISTOR CH 1/10W 100	2	
R104		ERJ6GEYJ223	M.RESISTOR CH 1/10W 22K	1	
R105		ERJ6GEYJ103	M.RESISTOR CH 1/10W 10K	1	
R106		ERJ6GEYJ474	M.RESISTOR CH 1/10W 470K	1	
R107-22		ERJ6GEYJ103	M.RESISTOR CH 1/10W 10K	16	
R123-25		ERJ6GEYJ101	M.RESISTOR CH 1/10W 100	3	
R126,27		ERJ6GEYJ562	M.RESISTOR CH 1/10W 5.6K	2	
R128		ERJ6GEYJ472	M.RESISTOR CH 1/10W 4.7K	1	
R129		ERJ6GEYJ223	M.RESISTOR CH 1/10W 22K	1	
R130-32		ERJ6GEYJ473	M.RESISTOR CH 1/10W 47K	3	
R133,34		ERJ6GEYJ562	M.RESISTOR CH 1/10W 5.6K	2	
R135		ERJ6GEYJ101	M.RESISTOR CH 1/10W 100	1	
R136		ERJ6GEYJ223	M.RESISTOR CH 1/10W 22K	1	
R137-43		ERJ6GEYJ473	M.RESISTOR CH 1/10W 47K	7	
R144		ERJ6GEYJ332	M.RESISTOR CH 1/10W 3.3K	1	
R145		ERJ6GEYJ101	M.RESISTOR CH 1/10W 100	1	
R146		ERJ6GEYJ223	M.RESISTOR CH 1/10W 22K	1	
R147		ERJ6GEYJ332	M.RESISTOR CH 1/10W 3.3K	1	
R148		ERJ6GEYJ101	M.RESISTOR CH 1/10W 100	1	
R149		ERJ6GEYJ102	M.RESISTOR CH 1/10W 1K	1	
R150		ERJ6GEYJ332	M.RESISTOR CH 1/10W 3.3K	1	
R151		ERJ6GEYJ101	M.RESISTOR CH 1/10W 100	1	
R152		ERJ6GEYJ223	M.RESISTOR CH 1/10W 22K	1	
R153		ERJ6GEYJ332	M.RESISTOR CH 1/10W 3.3K	1	
R154		ERJ6GEYJ101	M.RESISTOR CH 1/10W 100	1	
R155		ERJ6GEYJ102	M.RESISTOR CH 1/10W 1K	1	
R156,57		ERJ6GEYJ104	M.RESISTOR CH 1/10W 100K	2	
R158		ERJ6GEYJ332	M.RESISTOR CH 1/10W 3.3K	1	
R159		ERJ6GEYJ103	M.RESISTOR CH 1/10W 10K	1	
R160,61		ERJ6GEYJ102	M.RESISTOR CH 1/10W 1K	2	
R162		ERJ6GEYJ332	M.RESISTOR CH 1/10W 3.3K	1	
R163		ERJ6GEYJ103	M.RESISTOR CH 1/10W 10K	1	
R164		ERJ6GEYJ105	M.RESISTOR CH 1/10W 1M	1	
R165		ERJ6GEYJ223	M.RESISTOR CH 1/10W 22K	1	
R166		ERJ6GEYJ105	M.RESISTOR CH 1/10W 1M	1	
R167		ERJ6GEYJ223	M.RESISTOR CH 1/10W 22K	1	
R168,69		ERJ6GEYJ103	M.RESISTOR CH 1/10W 10K	2	
R170		ERJ6GEYJ104	M.RESISTOR CH 1/10W 100K	1	
R171		VRE0034E623	M.RESISTOR CH 1/10W 62K	1	
R172		ERJ6GEYJ104	M.RESISTOR CH 1/10W 100K	1	
R173-83		ERJ6GEYJ103	M.RESISTOR CH 1/10W 10K	11	
R184-86		ERJ6GEYJ473	M.RESISTOR CH 1/10W 47K	3	
R187-91		ERJ6GEYJ103	M.RESISTOR CH 1/10W 10K	5	
R192,93		ERJ6GEYJ101	M.RESISTOR CH 1/10W 100	2	
R194-01		ERJ6GEYJ103	M.RESISTOR CH 1/10W 10K	8	
R202		ERJ6GEYJ473	M.RESISTOR CH 1/10W 47K	1	
R203-06		ERJ6GEYJ103	M.RESISTOR CH 1/10W 10K	4	
R207,08		ERJ6GEYJ223	M.RESISTOR CH 1/10W 22K	2	
R209,10		ERJ6GEYJ122	M.RESISTOR CH 1/10W 1.2K	2	
R211		ERJ6GEYJ101	M.RESISTOR CH 1/10W 100	1	
R212		ERJ6GEYJ474	M.RESISTOR CH 1/10W 470K	1	
R213		ERJ6GEYJ103	M.RESISTOR CH 1/10W 10K	1	
R214		ERJ6GEYJ223	M.RESISTOR CH 1/10W 22K	1	
R215		ERJ6GEYJ473	M.RESISTOR CH 1/10W 47K	1	
R216,17		ERJ6GEYJ223	M.RESISTOR CH 1/10W 22K	2	
R218,19		ERJ6GEYJ101	M.RESISTOR CH 1/10W 100	2	
R220		ERJ6GEYJ223	M.RESISTOR CH 1/10W 22K	1	
R221		ERJ6GEYJ101	M.RESISTOR CH 1/10W 100	1	
R222		ERJ6GEYJ474	M.RESISTOR CH 1/10W 470K	1	
R223		ERJ6GEYJ103	M.RESISTOR CH 1/10W 10K	1	
R224		ERJ6GEYJ223	M.RESISTOR CH 1/10W 22K	1	
R225		ERJ6GEYJ102	M.RESISTOR CH 1/10W 1K	1	
R226		ERJ6GEYJ473	M.RESISTOR CH 1/10W 47K	1	
R227		ERJ6GEYJ103	M.RESISTOR CH 1/10W 10K	1	
R228		ERJ6GEYJ223	M.RESISTOR CH 1/10W 22K	1	
R229		ERJ6GEYJ473	M.RESISTOR CH 1/10W 47K	1	
R230		ERJ6GEYJ103	M.RESISTOR CH 1/10W 10K	1	
R231		ERJ6GEYJ101	M.RESISTOR CH 1/10W 100	1	
R232		ERJ6GEYJ223	M.RESISTOR CH 1/10W 22K	1	
R233,34		ERJ6GEYJ473	M.RESISTOR CH 1/10W 47K	2	
R235		ERJ6GEYJ223	M.RESISTOR CH 1/10W 22K	1	
R236-39		ERJ6GEYJ473	M.RESISTOR CH 1/10W 47K	4	
R240		ERJ6GEYJ103	M.RESISTOR CH 1/10W 10K	1	

Refer to the P.C.BOARDS LIST, page 6-1-1, before using this page.

Ref.No.		Part No.	Part Name & Description	Pcs	Remarks
R241-45		ERJ6GEYJ473	M.RESISTOR CH 1/10W 47K	5	
R247		ERJ6GEYJ103	M.RESISTOR CH 1/10W 10K	1	
R248,49		ERJ6GEYJ102	M.RESISTOR CH 1/10W 1K	2	
R250		ERJ6GEYJ223	M.RESISTOR CH 1/10W 22K	1	
R251		ERJ6GEYJ123	M.RESISTOR CH 1/10W 12K	1	
R252		ERJ6GEYJ103	M.RESISTOR CH 1/10W 10K	1	
R253		ERJ6GEYJ393	M.RESISTOR CH 1/10W 39K	1	
R254		ERJ6GEYJ223	M.RESISTOR CH 1/10W 22K	1	
R255		ERJ6GEYJ562	M.RESISTOR CH 1/10W 5.6K	1	
R256		ERJ6GEYJ223	M.RESISTOR CH 1/10W 22K	1	
R257		ERJ6GEYJ473	M.RESISTOR CH 1/10W 47K	1	
R258		ERJ6GEYJ103	M.RESISTOR CH 1/10W 10K	1	
R259,60		ERJ6GEYJ223	M.RESISTOR CH 1/10W 22K	2	
R261		ERJ6GEYJ183	M.RESISTOR CH 1/10W 18K	1	
R262		ERJ6GEYJ103	M.RESISTOR CH 1/10W 10K	1	
R263		ERJ6GEYJ333	M.RESISTOR CH 1/10W 33K	1	
R264,65		ERJ6GEYJ473	M.RESISTOR CH 1/10W 47K	2	
R266-68		ERJ6GEYJ101	M.RESISTOR CH 1/10W 100	3	
R269		ERJ6GEYJ103	M.RESISTOR CH 1/10W 10K	1	
R270		ERJ6GEYJ101	M.RESISTOR CH 1/10W 100	1	
R272-77		ERJ6GEYJ103	M.RESISTOR CH 1/10W 10K	6	
R278-85		ERJ6GEYJ473	M.RESISTOR CH 1/10W 47K	8	
R286		ERJ6GEYJ103	M.RESISTOR CH 1/10W 10K	1	
R287		ERJ6GEYJ223	M.RESISTOR CH 1/10W 22K	1	
R288,89		ERJ6GEYJ103	M.RESISTOR CH 1/10W 10K	2	
R290		ERJ6GEYJ473	M.RESISTOR CH 1/10W 47K	1	
R291,92		ERJ6GEYJ101	M.RESISTOR CH 1/10W 100	2	
R294		ERJ6GEYJ103	M.RESISTOR CH 1/10W 10K	1	
R295		ERJ6GEYJ564	M.RESISTOR CH 1/10W 560K	1	
R296		ERJ6GEYJ473	M.RESISTOR CH 1/10W 47K	1	
R301		ERJ6GEYJ563	M.RESISTOR CH 1/10W 56K	1	
R302,03		ERJ6GEYJ333	M.RESISTOR CH 1/10W 33K	2	
R304		ERJ6GEYJ473	M.RESISTOR CH 1/10W 47K	1	
R502		ERJ6GEYJ122	M.RESISTOR CH 1/10W 1.2K	1	
R504		ERJ6GEYJ222	M.RESISTOR CH 1/10W 2.2K	1	
R505		ERJ6GEYJ223	M.RESISTOR CH 1/10W 22K	1	
R506		ERJ6GEYJ103	M.RESISTOR CH 1/10W 10K	1	
R507		ERJ6GEYJ102	M.RESISTOR CH 1/10W 1K	1	
R508		ERJ6GEYJ104	M.RESISTOR CH 1/10W 100K	1	
R509		ERJ6GEYJ103	M.RESISTOR CH 1/10W 10K	1	
R510		ERJ6GEYJ223	M.RESISTOR CH 1/10W 22K	1	
R511		ERJ6GEYJ102	M.RESISTOR CH 1/10W 1K	1	
R512		ERJ6GEYJ104	M.RESISTOR CH 1/10W 100K	1	
R513		ERJ6GEYJ222	M.RESISTOR CH 1/10W 2.2K	1	
R514		ERJ6GEYJ223	M.RESISTOR CH 1/10W 22K	1	
R515		ERJ6GEYJ103	M.RESISTOR CH 1/10W 10K	1	
R516		ERJ6GEYJ102	M.RESISTOR CH 1/10W 1K	1	
R517		ERJ6GEYJ104	M.RESISTOR CH 1/10W 100K	1	
R518		ERJ6GEYJ223	M.RESISTOR CH 1/10W 22K	1	
R519		ERJ6GEYJ103	M.RESISTOR CH 1/10W 10K	1	
R520		ERJ6GEYJ102	M.RESISTOR CH 1/10W 1K	1	
R521		ERJ6GEYJ104	M.RESISTOR CH 1/10W 100K	1	
R522		ERJ6GEYJ222	M.RESISTOR CH 1/10W 2.2K	1	
R523		ERJ6GEYJ223	M.RESISTOR CH 1/10W 22K	1	
R524		ERJ6GEYJ103	M.RESISTOR CH 1/10W 10K	1	
R525		ERJ6GEYJ102	M.RESISTOR CH 1/10W 1K	1	
R526		ERJ6GEYJ104	M.RESISTOR CH 1/10W 100K	1	
R527		ERJ6GEYJ223	M.RESISTOR CH 1/10W 22K	1	
R528		ERJ6GEYJ103	M.RESISTOR CH 1/10W 10K	1	
R529		ERJ6GEYJ102	M.RESISTOR CH 1/10W 1K	1	
R530		ERJ6GEYJ104	M.RESISTOR CH 1/10W 100K	1	
R531,32		ERX1SJ1R0	M.RESISTOR 1W 1	2	
R533		ERJ6GEYJ104	M.RESISTOR CH 1/10W 100K	1	
R536		ERJ6GEYJ562	M.RESISTOR CH 1/10W 5.6K	1	
R537		ERJ6GEYJ222	M.RESISTOR CH 1/10W 2.2K	1	
R538		ERJ6GEYJ103	M.RESISTOR CH 1/10W 10K	1	
R539		ERJ6GEYJ223	M.RESISTOR CH 1/10W 22K	1	
R540		ERJ6GEYJ102	M.RESISTOR CH 1/10W 1K	1	
R541		ERJ6GEYJ104	M.RESISTOR CH 1/10W 100K	1	
R542		ERJ6GEYJ272	M.RESISTOR CH 1/10W 2.7K	1	
R543		ERJ6GEYJ271	M.RESISTOR CH 1/10W 270	1	
SW1		VSS0223	SWITCH	1	

Ref.No.		Part No.	Part Name & Description	Pcs	Remarks
SW3		VSR0045	SWITCH	1	
SW4-W6		EVQQEJ06K	SWITCH	3	
SW7		VST0096	SWITCH	1	
TP17-19		VJR0646	TEST POINT	3	
TPG1,G2		VJR0646	TEST POINT	2	
VC1		ECV1ZW20X60	V.CAPACITOR 20P	1	
X1		VSX0373	CRYSTAL OSCILLATOR	1	
			MISCELLANEOUS		
		VML2143	CARD PULLER	1	
		VML2144	CARD PULLER	1	
		VMS4174	PIN	4	
		VMZ1548	BARRIER	1	
		VSC3057	SHIELD CASE	1	
		VSC3058	SHIELD CASE	1	
		VSC3059	SHIELD CASE	1	
		VXA3967	P.C.B. SHIELD PLATE	1	
		XNG26E	NUT	4	
		XNG3ES	NUT	2	
		XSN3+6S	SCREW	2	
		XYNV3+K6FR	SCREW	4	
		XYN26+C10	SCREW	1	

Refer to the P.C.BOARDS LIST, page 6-1-1, before using this page.

Ref.No.		Part No.	Part Name & Description	Pcs	Remarks
	■	VEP82062A	P.C.BOARD W/COMPONENT		FOR AU-63-P,E,B
			AT POWER		
			CAPACITORS		
C1		ECEA1VU330	E.CAPACITOR 35V 33U	1	
C2		ECEA1EU221	E.CAPACITOR 25V 220U	1	
C3		ECEA1VU330	E.CAPACITOR 35V 33U	1	
C4		ECUM1H103ZFN	C.CAPACITOR CH 50V 0.01U	1	
C5		ECUM1H103KBN	C.CAPACITOR CH 50V 0.01U	1	
C6		ECUM1H102KBN	C.CAPACITOR CH 50V 1000P	1	
C7		ECUM1H103KBN	C.CAPACITOR CH 50V 0.01U	1	
C8,C9		ECWH10H103JR	C.CAPACITOR 50V 0.01U	2	
C10,11		ECWH10H103JR	C.CAPACITOR 50V 0.01U	2	
C12-19		ECQM1H183JF	P.CAPACITOR 50V 0.018U	8	
C20,21		ECCD2H331J	C.CAPACITOR 500V 330P	2	
C22-27		ECEA1VU330	E.CAPACITOR 35V 33U	6	
C28		ECEA1EU331	E.CAPACITOR 25V 330U	1	
C29		ECEA1CU100	E.CAPACITOR 16V 10U	1	
C30-33		ECUM1H103KBN	C.CAPACITOR CH 50V 0.01U	4	
CN350		VJP1511T	CONNECTOR(MALE)	1	
D1,D2		10E1	DIODE	2	
D3		MA151K	DIODE	1	
D4,D5		RP1H	DIODE	2	
D6,D7		ERZC07DK361B	SURGE ABSORBER 360V	2	
IC1		UPC494G	IC	1	
IC2,C3		UPC4558G	IC	2	
IC4,C5		VCR0111	IC	2	
L1		VLQ0128	COIL 47UH	1	
L2-L5		VLQEL05F101K	COIL 100UH	4	
P1		VJP1143	CONNECTOR(MALE)	1	
Q1		UN2213	TRANSISTOR-RESISTOR	1	
Q2		UN2113	TRANSISTOR-RESISTOR	1	
Q3		2SB709	TRANSISTOR CHIP	1	
Q4,Q5		2SK742	TRANSISTOR	2	
			RESISTORS		
R1		ER050CHD1004	M.RESISTOR 1/2W 1M	1	
R2		ERJ6GEYG223	M.RESISTOR CH 1/10W 22K	1	
R3		ERJ6GEYJ103	M.RESISTOR CH 1/10W 10K	1	
R4		ERJ6GEYJ104	M.RESISTOR CH 1/10W 100K	1	
R5		ERJ6GEYJ103	M.RESISTOR CH 1/10W 10K	1	
R6		ERJ6GEYG682	M.REISITOR CH 1/10W 6.8K	1	
R7		ERJ6GEYG332	M.RESISTOR CH 1/10W 3.3K	1	
R8		ERJ6GEYG223	M.RESISTOR CH 1/10W 22K	1	
R9		ERJ6GEYJ222	M.RESISTOR CH 1/10W 2.2K	1	
R10		ERJ6GEYG103	M.RESISTOR CH 1/10W 10K	1	
R11		ERJ6GEYG202	M.RESISTOR CH 1/10W 2K	1	
R12,13		ERJ6GEYJ101	M.RESISTOR CH 1/10W 100	2	

Ref.No.		Part No.	Part Name & Description	Pcs	Remarks
R14,15		ERQ12AJ2R2P	F.RESISTOR 1/2W 2.2	2	
R16		ERJ6GEYG622	M.RESISTOR CH 1/10W 6.2K	1	
R17		ERJ6GEYG332	M.RESISTOR CH 1/10W 3.3K	1	
R18-21		ER025CHD5103	M.RESISTOR 1/4W 510K	4	
R22		ERJ6GEYG123	M.RESISTOR CH 1/10W 12K	1	
R23,24		ERD25TJ474	C.RESISTOR 1/4W 470K	2	
R25		ERSB27G222	THERMISTOR 2.2K	1	
R26		ERJ6GEYG621	M.RESISTOR CH 1/10W 620	1	
R27		ERJ6GEYG272	M.RESISTOR CH 1/10W 2.7K	1	
R28-31		ERJ6GEYG133	M.RESISTOR CH 1/10W 13K	4	
R32		ERSB27G222	THERMISTOR 2.2K	1	
R33		ERJ6GEYG621	M.RESISTOR CH 1/10W 620	1	
R34		ERJ6GEYG272	M.RESISTOR CH 1/10W 2.7K	1	
R35-38		ERJ6GEYG133	M.RESISTOR CH 1/10W 13K	4	
R39		ERJ6GEYG153	M.RESISTOR CH 1/10W 15K	1	
R40		ERJ6GEYJ153	M.RESISTOR CH 1/10W 15K	1	
R41		ER025CKF8253	M.RESISTOR 1/4W 825K	1	
R42		ER025CKF6813	M.RESISTOR 1/4W 681K	1	
R43		ERJ6GEYJ473	M.RESISTOR CH 1/10W 47K	1	
R44		ERDS2TJ103	C.RESISTOR 1/4W 10K	1	
R45		ERJ6GEYG153	M.RESISTOR CH 1/10W 15K	1	
R46		ERJ6GEYJ153	M.RESISTOR CH 1/10W 15K	1	
R47		ER025CKF8253	M.RESISTOR 1/4W 825K	1	
R48		ER025CKF6813	M.RESISTOR 1/4W 681K	1	
R49		ERJ6GEYJ473	M.RESISTOR CH 1/10W 47K	1	
R50		ERDS2TJ103	C.RESISTOR 1/4W 10K	1	
R51		ERJ6GEYG682	M.REISITOR CH 1/10W 6.8K	1	
T1		VLT0537	TRANSFORMER	1	
TP1-P9		VJR0646	TEST POINT	9	
TP10		VJR0646	TEST POINT	1	
TPG1		VJR0646	TEST POINT	1	
VR1		VRV0109B504	V.RESISTOR 500K	1	
VR2,R3		VRV0109B503	V.RESISTOR 50K	2	
			MISCELLANEOUS		
		VMP2738	P.C.B. HOLDER ANGLE	1	
		VSC2298	SHIELD CASE	1	
		VSC2299	SHIELD COVER	1	
		VSC3407	SHIELD BOARD	1	
		XTV3+6F	SCREW	2	
	■	VEP84094A	P.C.BOARD W/COMPONENT		FOR AU-65-P,E,B
			AUDIO IN/OUT		
	■	VEP80573A	P.C.BOARD W/COMPONENT		ON VEP84094A
			AUDIO IN/ONT SUB		
			CAPACITORS		
C1		ECUM1H470JCN	C.CAPACITOR CH 50V 47P	1	
C2		ECUM1H473ZFN	C.CAPACITOR CH 50V 0.047U	1	
C5		ECUM1H470JCN	C.CAPACITOR CH 50V 47P	1	
C6		ECUM1H473ZFN	C.CAPACITOR CH 50V 0.047U	1	
C101		ECUM1H102JCN	C.CAPACITOR CH 50V 1000P	1	
C102,03		ECEA1CBZ100	E.CAPACITOR 16V 10U	2	
C104,05		ECUM1H330JCN	C.CAPACITOR CH 50V 33P	2	
C106		ECEA1CBZ470	E.CAPACITOR 16V 47U	1	
C107		ECEA1CPZ101	E.CAPACITOR 16V 100U	1	

Refer to the P.C.BOARDS LIST, page 6-1-1, before using this page.

Ref.No.		Part No.	Part Name & Description	Pcs	Remarks
C108,09		ECEA1CPZ301	E.CAPACITOR 16V 300U	2	
C115-18		ECEA1CPZ100	E.CAPACITOR 16V 10U	4	
C119		ECUM1H330JCN	C.CAPACITOR CH 50V 33P	1	
C201		ECUM1H102JCN	C.CAPACITOR CH 50V 1000P	1	
C202,03		ECEA1CBZ100	E.CAPACITOR 16V 10U	2	
C204,05		ECUM1H330JCN	C.CAPACITOR CH 50V 33P	2	
C206		ECEA1CBZ470	E.CAPACITOR 16V 47U	1	
C207		ECEA1CPZ101	E.CAPACITOR 16V 100U	1	
C208,09		ECEA1CPZ301	E.CAPACITOR 16V 300U	2	
C215-18		ECEA1CPZ100	E.CAPACITOR 16V 10U	4	
C219		ECUM1H330JCN	C.CAPACITOR CH 50V 33P	1	
C307		ECEA1CPZ101	E.CAPACITOR 16V 100U	1	
C308,09		ECEA1CPZ301	E.CAPACITOR 16V 300U	2	
C315-18		ECEA1CPZ100	E.CAPACITOR 16V 10U	4	
C407		ECEA1CPZ101	E.CAPACITOR 16V 100U	1	
C408,09		ECEA1CPZ301	E.CAPACITOR 16V 300U	2	
C415-18		ECEA1CPZ100	E.CAPACITOR 16V 10U	4	
C707		ECEA1CPZ101	E.CAPACITOR 16V 100U	1	
C708,09		ECEA1CPZ301	E.CAPACITOR 16V 300U	2	
C710		ECEA1CBZ100	E.CAPACITOR 16V 10U	1	
C714		ECEA1CBZ100	E.CAPACITOR 16V 10U	1	
C715-18		ECEA1CPZ100	E.CAPACITOR 16V 10U	4	
C801,02		ECEA1EN4R7S	E.CAPACITOR 25V 4.7U	2	
C804,05		ECEA1CPZ101	E.CAPACITOR 16V 100U	2	
C806		ECUM1E104ZFN	C.CAPACITOR CH 25V 0.1U	1	
C807,08		ECEA1CPZ101	E.CAPACITOR 16V 100U	2	
C809		ECUM1E104ZFN	C.CAPACITOR CH 25V 0.1U	1	
C810,11		ECEA1CPZ101	E.CAPACITOR 16V 100U	2	
C812		ECUM1H473ZFN	C.CAPACITOR CH 50V 0.047U	1	
C813,14		ECEA1CPZ101	E.CAPACITOR 16V 100U	2	
C815		ECUM1H473ZFN	C.CAPACITOR CH 50V 0.047U	1	
C816		ECEA1CU101	E.CAPACITOR 16V 100U	1	
C817,18		ECEA1CN330S	E.CAPACITOR 16V 33U	2	
C819		ECEA1VU470	E.CAPACITOR 35V 47U	1	
C820		ECEA1HU3R3	E.CAPACITOR 50V 3.3U	1	
C821		ECEA1VU470	E.CAPACITOR 35V 47U	1	
C822		ECEA1HU3R3	E.CAPACITOR 50V 3.3U	1	
C823		ECEA1CU101	E.CAPACITOR 16V 100U	1	
CN200		VJP1237R	CONNECTOR(MALE) 10P	1	
CN201		VJP1231T	CONNECTOR(MALE) 4P	1	
CN202		VJP1230T	CONNECTOR(MALE) 3P	1	
CN203		VJP1511T	CONNECTOR(MALE)	1	
CN204		VJP1235T	CONNECTOR(MALE) 8P	1	
CN205,06		VJP1230T	CONNECTOR(MALE) 3P	2	
CN207		VJP1239T	CONNECTOR(MALE) 12P	1	
CN208		VJP1230G	CONNECTOR(MALE)	1	
CN211,12		VJP1230R	CONNECTOR(MALE) 3P	2	
CN213		VJP1233T	CONNECTOR(MALE) 6P	1	
CN215		VJP1230B	CONNECTOR(MALE)	1	
D1,D2		MA153	DIODE	2	
D101-04		MA3075M	DIODE	4	
D105		HZ2ALL	DIODE	1	
D106		MA153	DIODE	1	
D107,08		HZ2ALL	DIODE	2	
D109		MA153	DIODE	1	
D110		HZ2ALL	DIODE	1	
D201-04		MA3075M	DIODE	4	
D205		HZ2ALL	DIODE	1	
D206		MA153	DIODE	1	
D207,08		HZ2ALL	DIODE	2	
D209		MA153	DIODE	1	
D210		HZ2ALL	DIODE	1	
D305		HZ2ALL	DIODE	1	
D306		MA153	DIODE	1	
D307,08		HZ2ALL	DIODE	2	
D309		MA153	DIODE	1	
D310		HZ2ALL	DIODE	1	
D405		HZ2ALL	DIODE	1	
D406		MA153	DIODE	1	

Ref.No.		Part No.	Part Name & Description	Pcs	Remarks
D407,08		HZ2ALL	DIODE	2	
D409		MA153	DIODE	1	
D410		HZ2ALL	DIODE	1	
D705		HZ2ALL	DIODE	1	
D706		MA153	DIODE	1	
D707,08		HZ2ALL	DIODE	2	
D709		MA153	DIODE	1	
D710		HZ2ALL	DIODE	1	
D801		MA153	DIODE	1	
D802,03		MA151K	DIODE	2	
IC1		RC4556MB	IC	1	
IC101,02		RC2068MD	IC	2	
IC103		NJM4558M	IC	1	
IC105		VEP80573A	P.C.BOARD W/COMPONENT	1	AUDIO IN/OUT SUB
IC201		RC2068MD	IC	1	
IC205		VEP80573A	P.C.BOARD W/COMPONENT	1	AUDIO IN/OUT SUB
IC303		NJM4558M	IC	1	
IC305		VEP80573A	P.C.BOARD W/COMPONENT	1	AUDIO IN/OUT SUB
IC405		VEP80573A	P.C.BOARD W/COMPONENT	1	AUDIO IN/OUT SUB
IC703,04		NJM4558M	IC	2	
IC705		VEP80573A	P.C.BOARD W/COMPONENT	1	AUDIO IN/OUT SUB
IC802		NJM4558M	IC	1	
IC803		AN78N09	IC	1	
IC804		AN79N09	IC	1	
IC805		UPD4053BG	IC	1	
IC806		UPD4052BG	IC	1	
IC808		RC4560MD	IC	1	
P1		VJR0312	CONNECTOR (MALE)	1	
Q1-Q4		2SD1328	TRANSISTOR CHIP	4	(Q,R)
Q101		2SC1847	TRANSISTOR	1	(R)
Q102		2SA886V-R	TRANSISTOR	1	(R)
Q103		2SC1847	TRANSISTOR	1	(R)
Q104		2SA886V-R	TRANSISTOR	1	(R)
Q201		2SC1847	TRANSISTOR	1	(R)
Q202		2SA886V-R	TRANSISTOR	1	(R)
Q203		2SC1847	TRANSISTOR	1	(R)
Q204		2SA886V-R	TRANSISTOR	1	(R)
Q301		2SC1847	TRANSISTOR	1	(R)
Q302		2SA886V-R	TRANSISTOR	1	(R)
Q303		2SC1847	TRANSISTOR	1	(R)
Q304		2SA886V-R	TRANSISTOR	1	(R)

Refer to the P.C.BOARDS LIST, page 6-1-1, before using this page.

Ref.No.		Part No.	Part Name & Description	Pcs	Remarks
Q401		2SC1847	TRANSISTOR	1	(R)
Q402		2SA886V-R	TRANSISTOR	1	(R)
Q403		2SC1847	TRANSISTOR	1	(R)
Q404		2SA886V-R	TRANSISTOR	1	(R)
Q701		2SC1847	TRANSISTOR	1	(R)
Q702		2SA886V-R	TRANSISTOR	1	(R)
Q703		2SC1847	TRANSISTOR	1	(R)
Q704		2SA886V-R	TRANSISTOR	1	(R)
Q801		2SD602	TRANSISTOR	1	(Q,R)
Q802		2SB710	TRANSISTOR	1	(Q,R)
Q803,04		UN2213	TRANSISTOR-RESISTOR	2	
Q805		UN2114	TRANSISTOR-RESISTOR	1	
Q806		UN2213	TRANSISTOR-RESISTOR	1	
Q807		UN2114	TRANSISTOR-RESISTOR	1	
			RESISTORS		
R1-R3		VRE0034E472	M.RESISTOR CH 1/10W 4.7K	3	
R4		ERJ6GEYJ105	M.RESISTOR CH 1/10W 1M	1	
R5		VRE0034E153	M.RESISTOR CH 1/10W 15K	1	
R6		ERJ6GEYJ221	M.RESISTOR CH 1/10W 220	1	
R7,R8		ERJ6GEYJ103	M.RESISTOR CH 1/10W 10K	2	
R9		ERJ6GEYJ473	M.RESISTOR CH 1/10W 47K	1	
R10		ERJ6GEYJ473	M.RESISTOR CH 1/10W 47K	1	
R11,12		VRE0034E153	M.RESISTOR CH 1/10W 15K	2	
R13,14		VRE0034E472	M.RESISTOR CH 1/10W 4.7K	2	
R15		ERJ6GEYJ105	M.RESISTOR CH 1/10W 1M	1	
R16		VRE0034E153	M.RESISTOR CH 1/10W 15K	1	
R17		ERJ6GEYJ221	M.RESISTOR CH 1/10W 220	1	
R18,19		ERJ6GEYJ103	M.RESISTOR CH 1/10W 10K	2	
R20,21		ERJ6GEYJ473	M.RESISTOR CH 1/10W 47K	2	
R101,02		ERJ6GEYJ752	M.RESISTOR CH 1/10W 7.5K	2	
R103		ERJ6GEYJ391	M.RESISTOR CH 1/10W 390	1	
R104		ERJ6GEYJ621	M.RESISTOR CH 1/10W 620	1	
R105		ERJ6GEYJ122	M.RESISTOR CH 1/10W 1.2K	1	
R106		ERJ6GEYJ471	M.RESISTOR CH 1/10W 470	1	
R108,09		ERJ6GEYJ104	M.RESISTOR CH 1/10W 100K	2	
R110		VRE0034E472	M.RESISTOR CH 1/10W 4.7K	1	
R111		VRE0034E332	M.RESISTOR CH 1/10W 3.3K	1	
R112		VRE0034E222	M.RESISTOR CH 1/10W 2.2K	1	
R113		VRE0034E332	M.RESISTOR CH 1/10W 3.3K	1	
R114-16		VRE0034E472	M.RESISTOR CH 1/10W 4.7K	3	
R118		ERJ6GEYJ223	M.RESISTOR CH 1/10W 22K	1	
R119		ERJ6GEYG301	M.RESISTOR CH 1/10W 300	1	
R120		ERJ6GEYG152	M.RESISTOR CH 1/10W 1.5K	1	
R121		ERJ6GEYG332	M.RESISTOR CH 1/10W 3.3K	1	
R122		ERJ6GEYG821	M.RESISTOR CH 1/10W 820	1	
R123		ERJ6GEYG563	M.RESISTOR CH 1/10W 56K	1	
R124		ERJ6GEYG562	M.RESISTOR CH 1/10W 5.6K	1	
R125		ERJ6GEYG222	M.RESISTOR CH 1/10W 2.2K	1	
R126		ERJ6GEYJ681	M.RESISTOR CH 1/10W 680	1	
R127		ERJ6GEYJ122	M.RESISTOR CH 1/10W 1.2K	1	
R128,29		ERG12SJ220	M.RESISTOR 1/2W 22	2	
R130		ERX12SJ4R7	M.RESISTOR 1/2W 4.7	1	
R131		ERJ6GEYJ103	M.RESISTOR CH 1/10W 10K	1	
R132		VRE0034E151	M.RESISTOR CH 1/10W 150	1	
R133		VRE0034E330	M.RESISTOR CH 1/10W 33	1	
R134		ERJ6GEYJ103	M.RESISTOR CH 1/10W 10K	1	
R135,36		ERG12SJ220	M.RESISTOR 1/2W 22	2	
R137		ERX12SJ4R7	M.RESISTOR 1/2W 4.7	1	
R201,02		ERJ6GEYJ752	M.RESISTOR CH 1/10W 7.5K	2	
R203		ERJ6GEYJ391	M.RESISTOR CH 1/10W 390	1	
R204		ERJ6GEYJ621	M.RESISTOR CH 1/10W 620	1	
R205		ERJ6GEYJ122	M.RESISTOR CH 1/10W 1.2K	1	
R206		ERJ6GEYJ471	M.RESISTOR CH 1/10W 470	1	
R208,09		ERJ6GEYJ104	M.RESISTOR CH 1/10W 100K	2	
R210		VRE0034E472	M.RESISTOR CH 1/10W 4.7K	1	
R211		VRE0034E332	M.RESISTOR CH 1/10W 3.3K	1	
R212		VRE0034E222	M.RESISTOR CH 1/10W 2.2K	1	
R213		VRE0034E332	M.RESISTOR CH 1/10W 3.3K	1	
R214-16		VRE0034E472	M.RESISTOR CH 1/10W 4.7K	3	
R218		ERJ6GEYJ223	M.RESISTOR CH 1/10W 22K	1	
R219		ERJ6GEYG301	M.RESISTOR CH 1/10W 300	1	
R220		ERJ6GEYG152	M.RESISTOR CH 1/10W 1.5K	1	

Ref.No.		Part No.	Part Name & Description	Pcs	Remarks
R221		ERJ6GEYG332	M.RESISTOR CH 1/10W 3.3K	1	
R222		ERJ6GEYG821	M.RESISTOR CH 1/10W 820	1	
R223		ERJ6GEYG563	M.RESISTOR CH 1/10W 56K	1	
R224		ERJ6GEYG562	M.RESISTOR CH 1/10W 5.6K	1	
R225		ERJ6GEYG222	M.RESISTOR CH 1/10W 2.2K	1	
R226		ERJ6GEYJ681	M.RESISTOR CH 1/10W 680	1	
R227		ERJ6GEYJ122	M.RESISTOR CH 1/10W 1.2K	1	
R228,29		ERG12SJ220	M.RESISTOR 1/2W 22	2	
R230		ERX12SJ4R7	M.RESISTOR 1/2W 4.7	1	
R231		ERJ6GEYJ103	M.RESISTOR CH 1/10W 10K	1	
R232		VRE0034E151	M.RESISTOR CH 1/10W 150	1	
R233		VRE0034E330	M.RESISTOR CH 1/10W 33	1	
R234		ERJ6GEYJ103	M.RESISTOR CH 1/10W 10K	1	
R235,36		ERG12SJ220	M.RESISTOR 1/2W 22	2	
R237		ERX12SJ4R7	M.RESISTOR 1/2W 4.7	1	
R319		ERJ6GEYG301	M.RESISTOR CH 1/10W 300	1	
R320		ERJ6GEYG152	M.RESISTOR CH 1/10W 1.5K	1	
R321		ERJ6GEYG332	M.RESISTOR CH 1/10W 3.3K	1	
R322		ERJ6GEYG821	M.RESISTOR CH 1/10W 820	1	
R323		ERJ6GEYG563	M.RESISTOR CH 1/10W 56K	1	
R324		ERJ6GEYG562	M.RESISTOR CH 1/10W 5.6K	1	
R325		ERJ6GEYG222	M.RESISTOR CH 1/10W 2.2K	1	
R326		ERJ6GEYJ681	M.RESISTOR CH 1/10W 680	1	
R327		ERJ6GEYJ122	M.RESISTOR CH 1/10W 1.2K	1	
R328,29		ERG12SJ220	M.RESISTOR 1/2W 22	2	
R330		ERX12SJ4R7	M.RESISTOR 1/2W 4.7	1	
R331		ERJ6GEYJ103	M.RESISTOR CH 1/10W 10K	1	
R332		VRE0034E151	M.RESISTOR CH 1/10W 150	1	
R333		VRE0034E330	M.RESISTOR CH 1/10W 33	1	
R334		ERJ6GEYJ103	M.RESISTOR CH 1/10W 10K	1	
R335,36		ERG12SJ220	M.RESISTOR 1/2W 22	2	
R337		ERX12SJ4R7	M.RESISTOR 1/2W 4.7	1	
R419		ERJ6GEYG301	M.RESISTOR CH 1/10W 300	1	
R420		ERJ6GEYG152	M.RESISTOR CH 1/10W 1.5K	1	
R421		ERJ6GEYG332	M.RESISTOR CH 1/10W 3.3K	1	
R422		ERJ6GEYG821	M.RESISTOR CH 1/10W 820	1	
R423		ERJ6GEYG563	M.RESISTOR CH 1/10W 56K	1	
R424		ERJ6GEYG562	M.RESISTOR CH 1/10W 5.6K	1	
R425		ERJ6GEYG222	M.RESISTOR CH 1/10W 2.2K	1	
R426		ERJ6GEYJ681	M.RESISTOR CH 1/10W 680	1	
R427		ERJ6GEYJ122	M.RESISTOR CH 1/10W 1.2K	1	
R428,29		ERG12SJ220	M.RESISTOR 1/2W 22	2	
R430		ERX12SJ4R7	M.RESISTOR 1/2W 4.7	1	
R431		ERJ6GEYJ103	M.RESISTOR CH 1/10W 10K	1	
R432		VRE0034E151	M.RESISTOR CH 1/10W 150	1	
R433		VRE0034E330	M.RESISTOR CH 1/10W 33	1	
R434		ERJ6GEYJ103	M.RESISTOR CH 1/10W 10K	1	
R435,36		ERG12SJ220	M.RESISTOR 1/2W 22	2	
R437		ERX12SJ4R7	M.RESISTOR 1/2W 4.7	1	
R726		ERJ6GEYJ102	M.RESISTOR CH 1/10W 1K	1	
R727		ERJ6GEY0R00	M.RESISTOR CH 1/10W 0	1	
R728,29		ERG12SJ220	M.RESISTOR 1/2W 22	2	
R730		ERX12SJ4R7	M.RESISTOR 1/2W 4.7	1	
R731		ERJ6GEYJ103	M.RESISTOR CH 1/10W 10K	1	
R732		VRE0034E151	M.RESISTOR CH 1/10W 150	1	
R733		VRE0034E330	M.RESISTOR CH 1/10W 33	1	
R734		ERJ6GEYJ103	M.RESISTOR CH 1/10W 10K	1	
R735,36		ERG12SJ220	M.RESISTOR 1/2W 22	2	
R737		ERX12SJ4R7	M.RESISTOR 1/2W 4.7	1	
R739		ERJ6GEYJ103	M.RESISTOR CH 1/10W 10K	1	
R741		ERJ6GEYJ103	M.RESISTOR CH 1/10W 10K	1	
R801		ERJ6GEY0R00	M.RESISTOR CH 1/10W 0	1	
R802,03		ERJ6GEYJ104	M.RESISTOR CH 1/10W 100K	2	
R809		ERJ6GEYJ153	M.RESISTOR CH 1/10W 15K	1	
R810		ERJ6GEYJ473	M.RESISTOR CH 1/10W 47K	1	
R811-13		ERJ6GEYJ223	M.RESISTOR CH 1/10W 22K	3	
R814,15		ERJ6GEYJ331	M.RESISTOR CH 1/10W 330	2	
R816		ERJ6GEYJ101	M.RESISTOR CH 1/10W 100	1	
R817		ERJ6GEYJ682	M.RESISTOR CH 1/10W 6.8K	1	
R818		ERJ6GEYJ101	M.RESISTOR CH 1/10W 100	1	
R819		ERJ6GEYJ332	M.RESISTOR CH 1/10W 3.3K	1	
R820		ERJ6GEYJ682	M.RESISTOR CH 1/10W 6.8K	1	
R821		ERJ6GEYJ470	M.RESISTOR CH 1/10W 47	1	
R822,23		ERJ6GEYJ822	M.RESISTOR CH 1/10W 8.2K	2	
R824		ERJ6GEYJ470	M.RESISTOR CH 1/10W 47	1	

Refer to the P.C.BOARDS LIST, page 6-1-1, before using this page.

Ref.No.		Part No.	Part Name & Description	Pcs	Remarks
R825		ERJ6GEYJ362	M.RESISTOR CH 1/10W 3.6K	1	
R826,27		ERJ6GEYJ103	M.RESISTOR CH 1/10W 10K	2	
R828		ERG1SJ220	M.RESISTOR 1W 22	1	
R829		ERJ6GEYJ104	M.RESISTOR CH 1/10W 100K	1	
R830,31		ERJ6GEYJ103	M.RESISTOR CH 1/10W 10K	2	
R832		ERG1SJ220	M.RESISTOR 1W 22	1	
R833		ERJ6GEY0R00	M.RESISTOR CH 1/10W 0	1	
SW101,02		VSS0182	SWITCH	2	
SW302		VSS0182	SWITCH	1	
	■	VEP84094C	P.C.BOARD W/COMPONENT		FOR AU-63-P,E,B
			AUDIO IN/OUT		AU-62-P,E,B
	■	VEP80573A	P.C.BOARD W/COMPONENT		ON VEP84094C
			AUDIO IN/OUT SUB		
			CAPACITORS		
C1		ECUM1H470JCN	P.CAPACITOR 50V 47P	1	
C2		ECUM1H473ZFN	C.CAPACITOR CH 50V 0.047U	1	
C5		ECUM1H470JCN	P.CAPACITOR 50V 47P	1	
C6		ECUM1H473ZFN	C.CAPACITOR CH 50V 0.047U	1	
C107		ECEA1CPZ101	E.CAPACITOR 16V 100U	1	
C108,09		ECEA1CPZ301	E.CAPACITOR 16V 300U	2	
C115-18		ECEA1CPZ100	E.CAPACITOR 16V 10U	4	
C207		ECEA1CPZ101	E.CAPACITOR 16V 100U	1	
C208,09		ECEA1CPZ301	E.CAPACITOR 16V 300U	2	
C215-18		ECEA1CPZ100	E.CAPACITOR 16V 10U	4	
C307		ECEA1CPZ101	E.CAPACITOR 16V 100U	1	
C308,09		ECEA1CPZ301	E.CAPACITOR 16V 300U	2	
C315-18		ECEA1CPZ100	E.CAPACITOR 16V 10U	4	
C407		ECEA1CPZ101	E.CAPACITOR 16V 100U	1	
C408,09		ECEA1CPZ301	E.CAPACITOR 16V 300U	2	
C415-18		ECEA1CPZ100	E.CAPACITOR 16V 10U	4	
C707		ECEA1CPZ101	E.CAPACITOR 16V 100U	1	
C708,09		ECEA1CPZ301	E.CAPACITOR 16V 300U	2	
C710		ECEA1CBZ100	E.CAPACITOR 16V 10U	1	
C714		ECEA1CBZ100	E.CAPACITOR 16V 10U	1	
C715-18		ECEA1CPZ100	E.CAPACITOR 16V 10U	4	
C804,05		ECEA1CPZ101	E.CAPACITOR 16V 100U	2	
C806		ECUM1E104ZFN	C.CAPACITOR CH 25V 0.1U	1	
C807,08		ECEA1CPZ101	E.CAPACITOR 16V 100U	2	
C809		ECUM1E104ZFN	C.CAPACITOR CH 25V 0.1U	1	
C810,11		ECEA1CPZ101	E.CAPACITOR 16V 100U	2	
C812		ECUM1H473ZFN	C.CAPACITOR CH 50V 0.047U	1	
C813,14		ECEA1CPZ101	E.CAPACITOR 16V 100U	2	
C815		ECUM1H473ZFN	C.CAPACITOR CH 50V 0.047U	1	
C816		ECEA1CU101	E.CAPACITOR 16V 100U	1	
C817,18		ECEA1CN330S	E.CAPACITOR 16V 33U	2	
C819		ECEA1VU470	E.CAPACITOR 35V 47U	1	
C820		ECEA1HU3R3	E.CAPACITOR 50V 3.3U	1	
C821		ECEA1VU470	E.CAPACITOR 35V 47U	1	
C822		ECEA1HU3R3	E.CAPACITOR 50V 3.3U	1	
C823		ECEA1CU101	E.CAPACITOR 16V 100U	1	
CN200		VJP1237R	CONNECTOR(MALE) 10P	1	
CN201		VJP1231T	CONNECTOR(MALE) 4P	1	
CN202		VJP1230T	CONNECTOR(MALE) 3P	1	
CN203		VJP1511T	CONNECTOR(MALE)	1	
CN205,06		VJP1230T	CONNECTOR(MALE) 3P	2	
CN207		VJP1239T	CONNECTOR(MALE) 12P	1	
CN211,12		VJP1230R	CONNECTOR(MALE) 3P	2	
CN215		VJP1230B	CONNECTOR (MALE)	1	

Ref.No.		Part No.	Part Name & Description	Pcs	Remarks
D1,D2		MA153	DIODE	2	
D105		HZ2ALL	DIODE	1	
D106		MA153	DIODE	1	
D107,08		HZ2ALL	DIODE	2	
D109		MA153	DIODE	1	
D110		HZ2ALL	DIODE	1	
D205		HZ2ALL	DIODE	1	
D206		MA153	DIODE	1	
D207,08		HZ2ALL	DIODE	2	
D209		MA153	DIODE	1	
D210		HZ2ALL	DIODE	1	
D305		HZ2ALL	DIODE	1	
D306		MA153	DIODE	1	
D307,08		HZ2ALL	DIODE	2	
D309		MA153	DIODE	1	
D310		HZ2ALL	DIODE	1	
D405		HZ2ALL	DIODE	1	
D406		MA153	DIODE	1	
D407,08		HZ2ALL	DIODE	2	
D409		MA153	DIODE	1	
D410		HZ2ALL	DIODE	1	
D705		HZ2ALL	DIODE	1	
D706		MA153	DIODE	1	
D707,08		HZ2ALL	DIODE	2	
D709		MA153	DIODE	1	
D710		HZ2ALL	DIODE	1	
D802,03		MA151K	DIODE	2	
IC1		RC4556MB	IC	1	
IC103		NJM4558M	IC	1	
IC105		VEP80573A	P.C.BOARD W/COMPONENT	1	AUDIO IN/OUT SUB
IC205		VEP80573A	P.C.BOARD W/COMPONENT	1	AUDIO IN/OUT SUB
IC303		NJM4558M	IC	1	
IC305		VEP80573A	P.C.BOARD W/COMPONENT	1	AUDIO IN/OUT SUB
IC405		VEP80573A	P.C.BOARD W/COMPONENT	1	AUDIO IN/OUT SUB
IC703,04		NJM4558M	IC	2	
IC705		VEP80573A	P.C.BOARD W/COMPONENT	1	AUDIO IN/OUT SUB
IC803		AN78N09	IC	1	
IC804		AN79N09	IC	1	
IC805		UPD4053BG	IC	1	
IC806		UPD4052BG	IC	1	
IC808		RC4560MD	IC	1	
P1		VJR0312	CONNECTOR (MALE)	1	

Refer to the P.C.BOARDS LIST, page 6-1-1, before using this page.

Ref.No.		Part No.	Part Name & Description	Pcs	Remarks
Q1-Q4		2SD1328	TRANSISTOR CHIP	4	(Q,R)
Q101		2SC1847	TRANSISTOR	1	(R)
Q102		2SA886V	TRANSISTOR	1	(R)
Q103		2SC1847	TRANSISTOR	1	(R)
Q104		2SA886V	TRANSISTOR	1	(R)
Q201		2SC1847	TRANSISTOR	1	(R)
Q202		2SA886V	TRANSISTOR	1	(R)
Q203		2SC1847	TRANSISTOR	1	(R)
Q204		2SA886V	TRANSISTOR	1	(R)
Q301		2SC1847	TRANSISTOR	1	(R)
Q302		2SA886V	TRANSISTOR	1	(R)
Q303		2SC1847	TRANSISTOR	1	(R)
Q304		2SA886V	TRANSISTOR	1	(R)
Q401		2SC1847	TRANSISTOR	1	(R)
Q402		2SA886V	TRANSISTOR	1	(R)
Q403		2SC1847	TRANSISTOR	1	(R)
Q404		2SA886V	TRANSISTOR	1	(R)
Q701		2SC1847	TRANSISTOR	1	(R)
Q702		2SA886V	TRANSISTOR	1	(R)
Q703		2SC1847	TRANSISTOR	1	(R)
Q704		2SA886V	TRANSISTOR	1	(R)
Q801		2SD602	TRANSISTOR	1	(Q,R)
Q802		2SB710	TRANSISTOR	1	(Q,R)
Q803,04		UN2213	TRANSISTOR-RESISTOR	2	
Q805		UN2114	TRANSISTOR-RESISTOR	1	
Q806		UN2213	TRANSISTOR-RESISTOR	1	
Q807		UN2114	TRANSISTOR-RESISTOR	1	
			RESISTORS		
R1-R3		VRE0034E472	M.RESISTOR CH 1/10W 4.7K	3	
R4		ERJ6GEYJ105	M.RESISTOR CH 1/10W 1M	1	
R5		VRE0034E153	M.RESISTOR CH 1/10W 15K	1	
R6		ERJ6GEYJ221	M.RESISTOR CH 1/10W 220	1	
R7,R8		ERJ6GEYJ103	M.RESISTOR CH 1/10W 10K	2	
R9		ERJ6GEYJ473	M.RESISTOR CH 1/10W 47K	1	
R10		ERJ6GEYJ473	M.RESISTOR CH 1/10W 47K	1	
R11,12		VRE0034E153	M.RESISTOR CH 1/10W 15K	2	
R13,14		VRE0034E472	M.RESISTOR CH 1/10W 4.7K	2	
R15		ERJ6GEYJ105	M.RESISTOR CH 1/10W 1M	1	
R16		VRE0034E153	M.RESISTOR CH 1/10W 15K	1	
R17		ERJ6GEYJ221	M.RESISTOR CH 1/10W 220	1	
R18,19		ERJ6GEYJ103	M.RESISTOR CH 1/10W 10K	2	
R20,21		ERJ6GEYJ473	M.RESISTOR CH 1/10W 47K	2	
R119		ERJ6GEYG301	M.RESISTOR CH 1/10W 300	1	
R120		ERJ6GEYG152	M.RESISTOR CH 1/10W 1.5K	1	
R121		ERJ6GEYG332	M.RESISTOR CH 1/10W 3.3K	1	
R122		ERJ6GEYG821	M.RESISTOR CH 1/10W 820	1	
R123		ERJ6GEYG563	M.RESISTOR CH 1/10W 56K	1	
R124		ERJ6GEYG562	M.RESISTOR CH 1/10W 5.6K	1	
R125		ERJ6GEYG222	M.RESISTOR CH 1/10W 2.2K	1	
R126		ERJ6GEYJ681	M.RESISTOR CH 1/10W 680	1	
R127		ERJ6GEYJ122	M.RESISTOR CH 1/10W 1.2K	1	
R128,29		ERG12SJ220	M.RESISTOR 1/2W 22	2	
R130		ERX12SJ4R7	M.RESISTOR 4.7	1	
R131		ERJ6GEYJ103	M.RESISTOR CH 1/10W 10K	1	
R132		VRE0034E151	M.RESISTOR CH 1/10W 150	1	
R133		VRE0034E330	M.RESISTOR CH 1/10W 33	1	
R134		ERJ6GEYJ103	M.RESISTOR CH 1/10W 10K	1	
R135,36		ERG12SJ220	M.RESISTOR 1/2W 22	2	
R137		ERX12SJ4R7	M.RESISTOR 4.7	1	
R219		ERJ6GEYG301	M.RESISTOR CH 1/10W 300	1	
R220		ERJ6GEYG152	M.RESISTOR CH 1/10W 1.5K	1	
R221		ERJ6GEYG332	M.RESISTOR CH 1/10W 3.3K	1	
R222		ERJ6GEYG821	M.RESISTOR CH 1/10W 820	1	
R223		ERJ6GEYG563	M.RESISTOR CH 1/10W 56K	1	
R224		ERJ6GEYG562	M.RESISTOR CH 1/10W 5.6K	1	
R225		ERJ6GEYG222	M.RESISTOR CH 1/10W 2.2K	1	
R226		ERJ6GEYJ681	M.RESISTOR CH 1/10W 680	1	
R227		ERJ6GEYJ122	M.RESISTOR CH 1/10W 1.2K	1	
R228,29		ERG12SJ220	M.RESISTOR 1/2W 22	2	

Ref.No.		Part No.	Part Name & Description	Pcs	Remarks
R230		ERX12SJ4R7	M.RESISTOR 4.7	1	
R231		ERJ6GEYJ103	M.RESISTOR CH 1/10W 10K	1	
R232		VRE0034E151	M.RESISTOR CH 1/10W 150	1	
R233		VRE0034E330	M.RESISTOR CH 1/10W 33	1	
R234		ERJ6GEYJ103	M.RESISTOR CH 1/10W 10K	1	
R235,36		ERG12SJ220	M.RESISTOR 1/2W 22	2	
R237		ERX12SJ4R7	M.RESISTOR 4.7	1	
R319		ERJ6GEYG301	M.RESISTOR CH 1/10W 300	1	
R320		ERJ6GEYG152	M.RESISTOR CH 1/10W 1.5K	1	
R321		ERJ6GEYG332	M.RESISTOR CH 1/10W 3.3K	1	
R322		ERJ6GEYG821	M.RESISTOR CH 1/10W 820	1	
R323		ERJ6GEYG563	M.RESISTOR CH 1/10W 56K	1	
R324		ERJ6GEYG562	M.RESISTOR CH 1/10W 5.6K	1	
R325		ERJ6GEYG222	M.RESISTOR CH 1/10W 2.2K	1	
R326		ERJ6GEYJ681	M.RESISTOR CH 1/10W 680	1	
R327		ERJ6GEYJ122	M.RESISTOR CH 1/10W 1.2K	1	
R328,29		ERG12SJ220	M.RESISTOR 1/2W 22	2	
R330		ERX12SJ4R7	M.RESISTOR 4.7	1	
R331		ERJ6GEYJ103	M.RESISTOR CH 1/10W 10K	1	
R332		VRE0034E151	M.RESISTOR CH 1/10W 150	1	
R333		VRE0034E330	M.RESISTOR CH 1/10W 33	1	
R334		ERJ6GEYJ103	M.RESISTOR CH 1/10W 10K	1	
R335,36		ERG12SJ220	M.RESISTOR 1/2W 22	2	
R337		ERX12SJ4R7	M.RESISTOR 4.7	1	
R419		ERJ6GEYG301	M.RESISTOR CH 1/10W 300	1	
R420		ERJ6GEYG152	M.RESISTOR CH 1/10W 1.5K	1	
R421		ERJ6GEYG332	M.RESISTOR CH 1/10W 3.3K	1	
R422		ERJ6GEYG821	M.RESISTOR CH 1/10W 820	1	
R423		ERJ6GEYG563	M.RESISTOR CH 1/10W 56K	1	
R424		ERJ6GEYG562	M.RESISTOR CH 1/10W 5.6K	1	
R425		ERJ6GEYG222	M.RESISTOR CH 1/10W 2.2K	1	
R426		ERJ6GEYJ681	M.RESISTOR CH 1/10W 680	1	
R427		ERJ6GEYJ122	M.RESISTOR CH 1/10W 1.2K	1	
R428,29		ERG12SJ220	M.RESISTOR 1/2W 22	2	
R430		ERX12SJ4R7	M.RESISTOR 4.7	1	
R431		ERJ6GEYJ103	M.RESISTOR CH 1/10W 10K	1	
R432		VRE0034E151	M.RESISTOR CH 1/10W 150	1	
R433		VRE0034E330	M.RESISTOR CH 1/10W 33	1	
R434		ERJ6GEYJ103	M.RESISTOR CH 1/10W 10K	1	
R435,36		ERG12SJ220	M.RESISTOR 1/2W 22	2	
R437		ERX12SJ4R7	M.RESISTOR 4.7	1	
R726		ERJ6GEYJ102	M.RESISTOR CH 1/10W 1K	1	
R727		ERJ6GEY0R00	M.RESISTOR CH 1/10W 0	1	
R728,29		ERG12SJ220	M.RESISTOR 1/2W 22	2	
R730		ERX12SJ4R7	M.RESISTOR 4.7	1	
R731		ERJ6GEYJ103	M.RESISTOR CH 1/10W 10K	1	
R732		VRE0034E151	M.RESISTOR CH 1/10W 150	1	
R733		VRE0034E330	M.RESISTOR CH 1/10W 33	1	
R734		ERJ6GEYJ103	M.RESISTOR CH 1/10W 10K	1	
R735,36		ERG12SJ220	M.RESISTOR 1/2W 22	2	
R737		ERX12SJ4R7	M.RESISTOR 4.7	1	
R739		ERJ6GEYJ103	M.RESISTOR CH 1/10W 10K	1	
R741		ERJ6GEYJ103	M.RESISTOR CH 1/10W 10K	1	
R811-13		ERJ6GEYJ223	M.RESISTOR CH 1/10W 22K	3	
R814,15		ERJ6GEYJ331	M.RESISTOR CH 1/10W 330	2	
R816		ERJ6GEYJ101	M.RESISTOR CH 1/10W 100	1	
R817		ERJ6GEYJ682	M.RESISTOR CH 1/10W 6.8K	1	
R818		ERJ6GEYJ101	M.RESISTOR CH 1/10W 100	1	
R819		ERJ6GEYJ332	M.RESISTOR CH 1/10W 3.3K	1	
R820		ERJ6GEYJ682	M.RESISTOR CH 1/10W 6.8K	1	
R821		ERJ6GEYJ470	M.RESISTOR CH 1/10W 47	1	
R822,23		ERJ6GEYJ822	M.RESISTOR CH 1/10W 8.2K	2	
R824		ERJ6GEYJ470	M.RESISTOR CH 1/10W 47	1	
R825		ERJ6GEYJ362	M.RESISTOR CH 1/10W 3.6K	1	
R826,27		ERJ6GEYJ103	M.RESISTOR CH 1/10W 10K	2	
R828		ERG1SJ220	M.RESISTOR 1W 22	1	
R829		ERJ6GEYJ104	M.RESISTOR CH 1/10W 100K	1	
R830,31		ERJ6GEYJ103	M.RESISTOR CH 1/10W 10K	2	
R832		ERG1SJ220	M.RESISTOR 1W 22	1	
SW102		VSS0182	SWITCH	1	
SW302		VSS0182	SWITCH	1	

Refer to the P.C.BOARDS LIST, page 6-1-1, before using this page.

Ref.No.		Part No.	Part Name & Description	Pcs	Remarks
	■	VEP84101A	P.C.BOARD W/COMPONENT		FOR AU-65-P,E,B
			AUDIO VR		
			CAPACITORS		
C1-C4		ECEA1CBZ100	E.CAPACITOR 16V 10U	4	
C5-C8		ECEA1CPZ101	E.CAPACITOR 16V 100U	4	
CN160		VJP1234T	CONNECTOR(MALE) 7P	1	
CN161		VJP1231T	CONNECTOR(MALE) 4P	1	
CN162		VJP1235T	CONNECTOR(MALE) 8P	1	
CN163		VJP1931T	CONNECTOR (MALE)	1	
IC1,C2		NJM4558D	IC	2	
IC3		AN78N09	IC	1	
IC4		AN79N09	IC	1	
			RESISTORS		
R1		ERDS2TJ103	C.RESISTOR 1/4W 10K	1	
R2		ERDS2TJ102	C.RESISTOR 1/4W 1K	1	
R3		ERDS2TJ104	C.RESISTOR 1/4W 100K	1	
R4		ERDS2TJ102	C.RESISTOR 1/4W 1K	1	
R5		ERDS2TJ332	C.RESISTOR 1/4W 3.3K	1	
R6		ERDS2TJ104	C.RESISTOR 1/4W 100K	1	
R7		ERDS2TJ103	C.RESISTOR 1/4W 10K	1	
R8		ERDS2TJ102	C.RESISTOR 1/4W 1K	1	
R9		ERDS2TJ104	C.RESISTOR 1/4W 100K	1	
R10,11		ERDS2TJ102	C.RESISTOR 1/4W 1K	2	
R12		ERDS2TJ104	C.RESISTOR 1/4W 100K	1	
R13		ERDS2TJ103	C.RESISTOR 1/4W 10K	1	
R14		ERDS2TJ102	C.RESISTOR 1/4W 1K	1	
R15		ERDS2TJ104	C.RESISTOR 1/4W 100K	1	
R16		ERDS2TJ102	C.RESISTOR 1/4W 1K	1	
R17		ERDS2TJ332	C.RESISTOR 1/4W 3.3K	1	
R18		ERDS2TJ104	C.RESISTOR 1/4W 100K	1	
R19		ERDS2TJ103	C.RESISTOR 1/4W 10K	1	
R20		ERDS2TJ102	C.RESISTOR 1/4W 1K	1	
R21		ERDS2TJ104	C.RESISTOR 1/4W 100K	1	
R22,23		ERDS2TJ102	C.RESISTOR 1/4W 1K	2	
R24		ERDS2TJ104	C.RESISTOR 1/4W 100K	1	
R28,29		ERDS2TJ183	C.RESISTOR 1/4W 18K	2	
SW1		VSS0305	SWITCH	1	
VR1		VRV0109B502	V.RESISTOR 5K	1	
VR2		EVU013320A14	V.RESISTOR 10K	1	
VR3		VRV0109B502	V.RESISTOR 5K	1	
VR4		EVU013020A14	V.RESISTOR 10K	1	
VR5		VRV0109B502	V.RESISTOR 5K	1	
VR6		EVU013320A14	V.RESISTOR 10K	1	
VR7		VRV0109B502	V.RESISTOR 5K	1	
VR8		EVU013020A14	V.RESISTOR 10K	1	
VR10		EVU023020B14	V.RESISTOR 10K	1	
VR11		EVUL7A020B54	V.RESISTOR 50K	1	

Ref.No.		Part No.	Part Name & Description	Pcs	Remarks
			MISCELLANEOUS		
		VMP2605	P.C.B. HOLDER ANGLE	1	
	■	VEP84101B	P.C.BOARD W/COMPONENT		FOR AU-62-P,E,B
			AUDIO VR		
			CAPACITORS		
C2		ECEA1CBZ100	E.CAPACITOR 16V 10U	1	
C4		ECEA1CBZ100	E.CAPACITOR 16V 10U	1	
C5-C8		ECEA1CPZ101	E.CAPACITOR 16V 100U	4	
CN160		VJP1234T	CONNECTOR(MALE) 7P	1	
CN162		VJP1235T	CONNECTOR(MALE) 8P	1	
CN163		VJP1931T	CONNECTOR (MALE)	1	
IC1,C2		NJM4558D	IC	2	
IC3		AN78N09	IC	1	
IC4		AN79N09	IC	1	
			RESISTORS		
R7		ERDS2TJ103	C.RESISTOR 1/4W 10K	1	
R8		ERDS2TJ102	C.RESISTOR 1/4W 1K	1	
R9		ERDS2TJ104	C.RESISTOR 1/4W 100K	1	
R10,11		ERDS2TJ102	C.RESISTOR 1/4W 1K	2	
R12		ERDS2TJ104	C.RESISTOR 1/4W 100K	1	
R19		ERDS2TJ103	C.RESISTOR 1/4W 10K	1	
R20		ERDS2TJ102	C.RESISTOR 1/4W 1K	1	
R21		ERDS2TJ104	C.RESISTOR 1/4W 100K	1	
R22,23		ERDS2TJ102	C.RESISTOR 1/4W 1K	2	
R24		ERDS2TJ104	C.RESISTOR 1/4W 100K	1	
SW1		VSS0305	SWITCH	1	
VR3		VRV0109B502	V.RESISTOR 5K	1	
VR4		EVU013020A14	V.RESISTOR 10K	1	
VR7		VRV0109B502	V.RESISTOR 5K	1	
VR8		EVU013020A14	V.RESISTOR 10K	1	
VR11		EVUL7A020B54	V.RESISTOR 50K	1	
			MISCELLANEOUS		
		VMP2605	P.C.B. HOLDER ANGLE	1	
	■	VEP84101C	P.C.BOARD W/COMPONENT		FOR AU-63-P,E,B
			AUDIO VR		

Refer to the P.C.BOARDS LIST, page 6-1-1, before using this page.

Ref.No.		Part No.	Part Name & Description	Pcs	Remarks
			CAPACITORS		
C2		ECEA1CBZ100	E.CAPACITOR 16V 10U	1	
C4		ECEA1CBZ100	E.CAPACITOR 16V 10U	1	
C5-C8		ECEA1CPZ101	E.CAPACITOR 16V 100U	4	
CN160		VJP1234T	CONNECTOR(MALE) 7P	1	
CN162		VJP1235T	CONNECTOR(MALE) 8P	1	
CN163		VJP1931T	CONNECTOR(MALE)	1	
IC1,C2		NJM4558D	IC	2	
IC3		AN78N09	IC	1	
IC4		AN79N09	IC	1	
			RESISTORS		
R7		ERDS2TJ103	C.RESISTOR 1/4W 10K	1	
R8		ERDS2TJ102	C.RESISTOR 1/4W 1K	1	
R9		ERDS2TJ104	C.RESISTOR 1/4W 100K	1	
R10,11		ERDS2TJ102	C.RESISTOR 1/4W 1K	2	
R12		ERDS2TJ104	C.RESISTOR 1/4W 100K	1	
R19		ERDS2TJ103	C.RESISTOR 1/4W 10K	1	
R20		ERDS2TJ102	C.RESISTOR 1/4W 1K	1	
R21		ERDS2TJ104	C.RESISTOR 1/4W 100K	1	
R22,23		ERDS2TJ102	C.RESISTOR 1/4W 1K	2	
R24		ERDS2TJ104	C.RESISTOR 1/4W 100K	1	
SW1		VSS0305	SWITCH	1	
VR3		VRV0109B502	V.RESISTOR 5K	1	
VR4		EVU013020A14	V.RESISTOR 10K	1	
VR7		VRV0109B502	V.RESISTOR 5K	1	
VR8		EVU013020A14	V.RESISTOR 10K	1	
VR11		ERDS2TJ273	C.RESISTOR 1/4W 27K	1	
			MISCELLANEOUS		
		VMP2605	P.C.B. HOLDER ANGLE	1	
	■	VEP00E08C	P.C.BOARD W/COMPONENT		
			AUTO OFF LED		
LED1		VLL0029	LED	1	
P113		VJP1141	CONNECTOR(MALE) 2P	1	
			RESISTORS		
R1		ERDS2TJ390	C.RESISTOR 1/4W 39	1	

Ref.No.		Part No.	Part Name & Description	Pcs	Remarks
	■	VEP00E72A	P.C.BOARD W/COMPONENT		
			CASSETTE CARRIAGE LAMP		
			MISCELLANEOUS		
		VLL0019	PILOT LAMP	3	
	■	VEP00E30A	P.C.BOARD W/COMPONENT		
			CASSETTE DETECT		
			MISCELLANEOUS		
		ON1110-R	PHOTO INTERRUPTER	1	
	■	VEP80422B	P.C.BOARD W/COMPONENT		
			EJECT INTERFACE		
P112		VJP1188	CONNECTOR (MALE)	1	
P115		VJP1188	CONNECTOR (MALE)	1	
	■	VEP80232A	P.C.BOARD W/COMPONENT		
			EJECT SW		
LED1		VLL0024	LED	1	
			RESISTORS		
R1		ERDS2TJ271	C.RESISTOR 1/4W 270	1	
SW1		VSP0221	SWITCH	1	
	■	VEP80553A	P.C.BOARD W/COMPONENT		FOR AU-65-P
			FRONT INTERFACE		
			CAPACITORS		
C1-C9		ECKF1H103ZF	C.CAPACITOR 50V 0.01U	9	

Refer to the P.C.BOARDS LIST, page 6-1-1, before using this page.

Ref.No.		Part No.	Part Name & Description	Pcs	Remarks
C10-13		ECKF1H103ZF	C.CAPACITOR 50V 0.01U	4	
C15,16		ECKF1H103ZF	C.CAPACITOR 50V 0.01U	2	
C17-22		ECKF1H103ZF	C.CAPACITOR 50V 0.01U	6	
C23		ECQV1H104JZ	P.CAPACITOR 50V 0.1U	1	
C24		ECKF1H391KB	C.CAPACITOR 50V 390P	1	
C25		ECEA1CU101	E.CAPACITOR 16V 100U	1	
C26		ECKF1H103ZF	C.CAPACITOR 50V 0.01U	1	
C27		ECEA1CU101	E.CAPACITOR 16V 100U	1	
C28		ECKF1H103ZF	C.CAPACITOR 50V 0.01U	1	
C29		ECEA1CU330	E.CAPACITOR 16V 33U	1	
C30		ECKF1H103ZF	C.CAPACITOR 50V 0.01U	1	
C33-35		ECEA1CU101	E.CAPACITOR 16V 100U	3	
C101		ECQV1H274JZ	P.CAPACITOR 50V 0.27U	1	
C102		ECEA1CU100	E.CAPACITOR 16V 10U	1	
C103		ECEA1HU4R7	E.CAPACITOR 50V 4.7U	1	
C104		ECQV1H274JZ	P.CAPACITOR 50V 0.27U	1	
C105		ECEA1CU100	E.CAPACITOR 16V 10U	1	
C106		ECEA1HU4R7	E.CAPACITOR 50V 4.7U	1	
C107		ECQV1H274JZ	P.CAPACITOR 50V 0.27U	1	
C108		ECEA1CU100	E.CAPACITOR 16V 10U	1	
C109		ECEA1HU4R7	E.CAPACITOR 50V 4.7U	1	
C110		ECQV1H274JZ	P.CAPACITOR 50V 0.27U	1	
C111		ECEA1CU100	E.CAPACITOR 16V 10U	1	
C112		ECEA1HU4R7	E.CAPACITOR 50V 4.7U	1	
C113,14		ECEA1CBZ100	E.CAPACITOR 16V 10U	2	
C115-18		ECEA1CPZ101	E.CAPACITOR 16V 100U	4	
CN130		VJP1931T	CONNECTOR (MALE)	1	
CN131		VJP1239T	CONNECTOR(MALE) 12P	1	
CN132		VJP1237T	CONNECTOR(MALE) 10P	1	
CN133		VJP1237R	CONNECTOR(MALE) 10P	1	
CN134		VJP1931T	CONNECTOR (MALE)	1	
CN135		VJP1233T	CONNECTOR(MALE) 6P	1	
CN136		VJP1932T	CONNECTOR (MALE)	1	
CN137		VJP1232T	CONNECTOR(MALE) 5P	1	
CN138		VJP1237T	CONNECTOR(MALE) 10P	1	
CN139		VJP1234T	CONNECTOR(MALE) 7P	1	
D1		MA165	DIODE	1	
D6		MA165	DIODE	1	
D101-08		OA95	DIODE	8	
IC1-C3		MC14053BCP	IC	3	
IC4,C5		MC14021BCP	IC	2	
IC6		MC14050BCP	IC	1	
IC7		AN78L12	IC	1	
IC8		AN79L12	IC	1	
IC9		AN79L05	IC	1	
IC101-03		NJM4558D	IC	3	
IC104		AN78L09	IC	1	
IC105		AN79L09	IC	1	
P150		VJP2891A020	CONNECTOR (MALE)	1	
Q1		UN1212	TRANSISTOR-RESISTOR	1	
Q2		UN1213	TRANSISTOR-RESISTOR	1	
Q3,4		2SD636	TRANSISTOR	2	
Q101		2SD636	TRANSISTOR	1	
Q102		2SD1330	TRANSISTOR	1	
Q103		2SD636	TRANSISTOR	1	
Q104		2SD1330	TRANSISTOR	1	
Q105		2SD636	TRANSISTOR	1	
Q106		2SD1330	TRANSISTOR	1	
Q107		2SD636	TRANSISTOR	1	
Q108		2SD1330	TRANSISTOR	1	

Ref.No.		Part No.	Part Name & Description	Pcs	Remarks
			RESISTORS		
R7,R8		ERDS2TJ223	C.RESISTOR 1/4W 22K	2	
R9		ERDS2TJ103	C.RESISTOR 1/4W 10K	1	
R10-16		ERDS2TJ103	C.RESISTOR 1/4W 10K	7	
R25-32		ERDS2TJ103	C.RESISTOR 1/4W 10K	8	
R33,34		ERDS2TJ223	C.RESISTOR 1/4W 22K	2	
R35		ERDS2TJ102	C.RESISTOR 1/4W 1K	1	
R36		ERDS2TJ474	C.RESISTOR 1/4W 470K	1	
R37		ERDS2TJ103	C.RESISTOR 1/4W 10K	1	
R38,39		ERDS2TJ223	C.RESISTOR 1/4W 22K	2	
R40		ERDS2TJ474	C.RESISTOR 1/4W 470K	1	
R41		ERDS2TJ103	C.RESISTOR 1/4W 10K	1	
R42		ERDS2TJ223	C.RESISTOR 1/4W 22K	1	
R45-48		ERDS2TJ103	C.RESISTOR 1/4W 10K	4	
R72,73		ERDS2TJ223	C.RESISTOR 1/4W 22K	2	
R101		ERDS2TJ682	C.RESISTOR 1/4W 6.8K	1	
R102,03		ERDS2TJ223	C.RESISTOR 1/4W 22K	2	
R104		ERDS2TJ221	C.RESISTOR 1/4W 220	1	
R105		ERDS2TJ222	C.RESISTOR 1/4W 2.2K	1	
R106,07		ERDS2TJ103	C.RESISTOR 1/4W 10K	2	
R108		ERDS2TJ682	C.RESISTOR 1/4W 6.8K	1	
R109,10		ERDS2TJ223	C.RESISTOR 1/4W 22K	2	
R111		ERDS2TJ221	C.RESISTOR 1/4W 220	1	
R112		ERDS2TJ222	C.RESISTOR 1/4W 2.2K	1	
R113,14		ERDS2TJ103	C.RESISTOR 1/4W 10K	2	
R115		ERDS2TJ682	C.RESISTOR 1/4W 6.8K	1	
R116,17		ERDS2TJ223	C.RESISTOR 1/4W 22K	2	
R118		ERDS2TJ221	C.RESISTOR 1/4W 220	1	
R119		ERDS2TJ222	C.RESISTOR 1/4W 2.2K	1	
R120,21		ERDS2TJ103	C.RESISTOR 1/4W 10K	2	
R122		ERDS2TJ682	C.RESISTOR 1/4W 6.8K	1	
R123,24		ERDS2TJ223	C.RESISTOR 1/4W 22K	2	
R125		ERDS2TJ221	C.RESISTOR 1/4W 220	1	
R126		ERDS2TJ222	C.RESISTOR 1/4W 2.2K	1	
R127-29		ERDS2TJ103	C.RESISTOR 1/4W 10K	3	
R130		ERDS2TJ102	C.RESISTOR 1/4W 1K	1	
R131		ERDS2TJ104	C.RESISTOR 1/4W 100K	1	
R132		ERDS2TJ102	C.RESISTOR 1/4W 1K	1	
R133		ERDS2TJ562	C.RESISTOR 1/4W 5.6K	1	
R134		ERDS2TJ104	C.RESISTOR 1/4W 100K	1	
R135		ERDS2TJ103	C.RESISTOR 1/4W 10K	1	
R136		ERDS2TJ102	C.RESISTOR 1/4W 1K	1	
R137		ERDS2TJ104	C.RESISTOR 1/4W 100K	1	
R138		ERDS2TJ102	C.RESISTOR 1/4W 1K	1	
R139		ERDS2TJ562	C.RESISTOR 1/4W 5.6K	1	
R140		ERDS2TJ104	C.RESISTOR 1/4W 100K	1	
RA1,A2		EXBF9E103J	COMBI.R-R 10K	2	
SW1-W5		VSS0119	SWITCH	5	
SW6		VSS0243	SWITCH	1	
SW7-11		VSS0119	SWITCH	5	
VR8		EVUF2AE20B53	V.RESISTOR 5K	1	
VR9		VRV0109B502	V.RESISTOR 5K	1	
VR10,11		EVUF2AE20A14	V.RESISTOR 10K	2	
VR12,13		VRV0109B502	V.RESISTOR 5K	2	
VR101-04		VRV0110B203	V.RESISTOR 5K	4	
			MISCELLANEOUS		
		VMP2600	P.C.B. HOLDER ANGLE	1	
		XTV3+6F	SCREW	2	

Refer to the P.C.BOARDS LIST, page 6-1-1, before using this page.

Ref.No.		Part No.	Part Name & Description	Pcs	Remarks
	■	VEP80553B	P.C.BOARD W/COMPONENT		FOR AU-62-P
			FRONT INTERFACE		
			CAPACITORS		
C1-C9		ECKF1H103ZF	C.CAPACITOR 50V 0.01U	9	
C10,11		ECKF1H103ZF	C.CAPACITOR 50V 0.01U	2	
C13		ECKF1H103ZF	C.CAPACITOR 50V 0.01U	1	
C15		ECKF1H103ZF	C.CAPACITOR 50V 0.01U	1	
C17-22		ECKF1H103ZF	C.CAPACITOR 50V 0.01U	6	
C23		ECQV1H104JZ	P.CAPACITOR 50V 0.1U	1	
C24		ECKF1H391KB	C.CAPACITOR 50V 390P	1	
C25		ECEA1CU101	E.CAPACITOR 16V 100U	1	
C26		ECKF1H103ZF	C.CAPACITOR 50V 0.01U	1	
C27		ECEA1CU101	E.CAPACITOR 16V 100U	1	
C28		ECKF1H103ZF	C.CAPACITOR 50V 0.01U	1	
C29		ECEA1CU330	E.CAPACITOR 16V 33U	1	
C30		ECKF1H103ZF	C.CAPACITOR 50V 0.01U	1	
C33-35		ECEA1CU101	E.CAPACITOR 16V 100U	3	
C101		ECQV1H274JZ	P.CAPACITOR 50V 0.27U	1	
C102		ECEA1CU100	E.CAPACITOR 16V 10U	1	
C103		ECEA1HU4R7	E.CAPACITOR 50V 4.7U	1	
C104		ECQV1H274JZ	P.CAPACITOR 50V 0.27U	1	
C105		ECEA1CU100	E.CAPACITOR 16V 10U	1	
C106		ECEA1HU4R7	E.CAPACITOR 50V 4.7U	1	
C107		ECQV1H274JZ	P.CAPACITOR 50V 0.27U	1	
C108		ECEA1CU100	E.CAPACITOR 16V 10U	1	
C109		ECEA1HU4R7	E.CAPACITOR 50V 4.7U	1	
C110		ECQV1H274JZ	P.CAPACITOR 50V 0.27U	1	
C111		ECEA1CU100	E.CAPACITOR 16V 10U	1	
C112		ECEA1HU4R7	E.CAPACITOR 50V 4.7U	1	
C113,14		ECEA1CBZ100	E.CAPACITOR 16V 10U	2	
C115-18		ECEA1CPZ101	E.CAPACITOR 16V 100U	4	
CN130		VJP1931T	CONNECTOR (MALE)	1	
CN131		VJP1239T	CONNECTOR(MALE) 12P	1	
CN132		VJP1237T	CONNECTOR(MALE) 10P	1	
CN133		VJP1237R	CONNECTOR(MALE) 10P	1	
CN134		VJP1931T	CONNECTOR (MALE)	1	
CN135		VJP1233T	CONNECTOR(MALE) 6P	1	
CN136		VJP1932T	CONNECTOR (MALE)	1	
CN137		VJP1232T	CONNECTOR(MALE) 5P	1	
CN138		VJP1237T	CONNECTOR(MALE) 10P	1	
CN139		VJP1234T	CONNECTOR(MALE) 7P	1	
D1		MA165	DIODE	1	
D6		MA165	DIODE	1	
D101-08		OA95	DIODE	8	
IC1-C3		MC14053BCP	IC	3	
IC4,C5		MC14021BCP	IC	2	
IC6		MC14050BCP	IC	1	
IC7		AN78L12	IC	1	
IC8		AN79L12	IC	1	
IC9		AN79L05	IC	1	
IC101-03		NJM4558D	IC	3	
IC104		AN78L09	IC	1	
IC105		AN79L09	IC	1	

Ref.No.		Part No.	Part Name & Description	Pcs	Remarks
P150		VJP2891A020	CONNECTOR (MALE)	1	
Q1		UN1212	TRANSISTOR-RESISTOR	1	
Q101		2SD636	TRANSISTOR	1	
Q102		2SD1330	TRANSISTOR	1	
Q103		2SD636	TRANSISTOR	1	
Q104		2SD1330	TRANSISTOR	1	
Q105		2SD636	TRANSISTOR	1	
Q106		2SD1330	TRANSISTOR	1	
Q107		2SD636	TRANSISTOR	1	
Q108		2SD1330	TRANSISTOR	1	
			RESISTORS		
R7,R8		ERDS2TJ223	C.RESISTOR 1/4W 22K	2	
R9		ERDS2TJ103	C.RESISTOR 1/4W 10K	1	
R10-16		ERDS2TJ103	C.RESISTOR 1/4W 10K	7	
R25-32		ERDS2TJ103	C.RESISTOR 1/4W 10K	8	
R33,34		ERDS2TJ223	C.RESISTOR 1/4W 22K	2	
R35		ERDS2TJ102	C.RESISTOR 1/4W 1K	1	
R36		ERDS2TJ474	C.RESISTOR 1/4W 470K	1	
R37		ERDS2TJ103	C.RESISTOR 1/4W 10K	1	
R38,39		ERDS2TJ223	C.RESISTOR 1/4W 22K	2	
R40		ERDS2TJ474	C.RESISTOR 1/4W 470K	1	
R41		ERDS2TJ103	C.RESISTOR 1/4W 10K	1	
R42		ERDS2TJ223	C.RESISTOR 1/4W 22K	1	
R45-48		ERDS2TJ103	C.RESISTOR 1/4W 10K	4	
R72,73		ERDS2TJ223	C.RESISTOR 1/4W 22K	2	
R101		ERDS2TJ682	C.RESISTOR 1/4W 6.8K	1	
R102,03		ERDS2TJ223	C.RESISTOR 1/4W 22K	2	
R104		ERDS2TJ221	C.RESISTOR 1/4W 220	1	
R105		ERDS2TJ222	C.RESISTOR 1/4W 2.2K	1	
R106,07		ERDS2TJ103	C.RESISTOR 1/4W 10K	2	
R108		ERDS2TJ682	C.RESISTOR 1/4W 6.8K	1	
R109,10		ERDS2TJ223	C.RESISTOR 1/4W 22K	2	
R111		ERDS2TJ221	C.RESISTOR 1/4W 220	1	
R112		ERDS2TJ222	C.RESISTOR 1/4W 2.2K	1	
R113,14		ERDS2TJ103	C.RESISTOR 1/4W 10K	2	
R115		ERDS2TJ682	C.RESISTOR 1/4W 6.8K	1	
R116,17		ERDS2TJ223	C.RESISTOR 1/4W 22K	2	
R118		ERDS2TJ221	C.RESISTOR 1/4W 220	1	
R119		ERDS2TJ222	C.RESISTOR 1/4W 2.2K	1	
R120,21		ERDS2TJ103	C.RESISTOR 1/4W 10K	2	
R122		ERDS2TJ682	C.RESISTOR 1/4W 6.8K	1	
R123,24		ERDS2TJ223	C.RESISTOR 1/4W 22K	2	
R125		ERDS2TJ221	C.RESISTOR 1/4W 220	1	
R126		ERDS2TJ222	C.RESISTOR 1/4W 2.2K	1	
R127-29		ERDS2TJ103	C.RESISTOR 1/4W 10K	3	
R130		ERDS2TJ102	C.RESISTOR 1/4W 1K	1	
R131		ERDS2TJ104	C.RESISTOR 1/4W 100K	1	
R132		ERDS2TJ102	C.RESISTOR 1/4W 1K	1	
R133		ERDS2TJ562	C.RESISTOR 1/4W 5.6K	1	
R134		ERDS2TJ104	C.RESISTOR 1/4W 100K	1	
R135		ERDS2TJ103	C.RESISTOR 1/4W 10K	1	
R136		ERDS2TJ102	C.RESISTOR 1/4W 1K	1	
R137		ERDS2TJ104	C.RESISTOR 1/4W 100K	1	
R138		ERDS2TJ102	C.RESISTOR 1/4W 1K	1	
R139		ERDS2TJ562	C.RESISTOR 1/4W 5.6K	1	
R140		ERDS2TJ104	C.RESISTOR 1/4W 100K	1	
RA1,A2		EXBF9E103J	COMBI.R-R 10K	2	
SW1-W3		VSS0119	SWITCH	3	
SW5		VSS0119	SWITCH	1	
SW7		VSS0119	SWITCH	1	
SW10		VSS0119	SWITCH	1	

Refer to the P.C.BOARDS LIST, page 6-1-1, before using this page.

Ref.No.		Part No.	Part Name & Description	Pcs	Remarks
VR8		EVUF2AE20B53	V.RESISTOR 5K	1	
VR9		VRV0109B502	V.RESISTOR 5K	1	
VR10,11		EVUF2AE20A14	V.RESISTOR 10K	2	
VR12,13		VRV0109B502	V.RESISTOR 5K	2	
VR101-04		VRV0110B203	V.RESISTOR 5K	4	
			MISCELLANEOUS		
		VMP2600	P.C.B. HOLDER ANGLE	1	
		XTV3+6F	SCREW	2	
	■	VEP80553C	P.C.BOARD W/COMPONENT		FOR AU-63-P
			FRONT INTERFACE		
			CAPACITORS		
C1-C9		ECKF1H103ZF	C.CAPACITOR 50V 0.01U	9	
C10,11		ECKF1H103ZF	C.CAPACITOR 50V 0.01U	2	
C13		ECKF1H103ZF	C.CAPACITOR 50V 0.01U	1	
C17-22		ECKF1H103ZF	C.CAPACITOR 50V 0.01U	6	
C23		ECQV1H104JZ	P.CAPACITOR 50V 0.1U	1	
C24		ECKF1H391KB	C.CAPACITOR 50V 390P	1	
C25		ECEA1CU101	E.CAPACITOR 16V 100U	1	
C26		ECKF1H103ZF	C.CAPACITOR 50V 0.01U	1	
C27		ECEA1CU101	E.CAPACITOR 16V 100U	1	
C28		ECKF1H103ZF	C.CAPACITOR 50V 0.01U	1	
C29		ECEA1CU330	E.CAPACITOR 16V 33U	1	
C30		ECKF1H103ZF	C.CAPACITOR 50V 0.01U	1	
C33-35		ECEA1CU101	E.CAPACITOR 16V 100U	3	
C101		ECQV1H274JZ	P.CAPACITOR 50V 0.27U	1	
C102		ECEA1CU100	E.CAPACITOR 16V 10U	1	
C103		ECEA1HU4R7	E.CAPACITOR 50V 4.7U	1	
C104		ECQV1H274JZ	P.CAPACITOR 50V 0.27U	1	
C105		ECEA1CU100	E.CAPACITOR 16V 10U	1	
C106		ECEA1HU4R7	E.CAPACITOR 50V 4.7U	1	
C107		ECQV1H274JZ	P.CAPACITOR 50V 0.27U	1	
C108		ECEA1CU100	E.CAPACITOR 16V 10U	1	
C109		ECEA1HU4R7	E.CAPACITOR 50V 4.7U	1	
C110		ECQV1H274JZ	P.CAPACITOR 50V 0.27U	1	
C111		ECEA1CU100	E.CAPACITOR 16V 10U	1	
C112		ECEA1HU4R7	E.CAPACITOR 50V 4.7U	1	
C113,14		ECEA1CBZ100	E.CAPACITOR 16V 10U	2	
C115-18		ECEA1CPZ101	E.CAPACITOR 16V 100U	4	
CN130		VJP1931T	CONNECTOR (MALE)	1	
CN131		VJP1239T	CONNECTOR(MALE) 12P	1	
CN132		VJP1237T	CONNECTOR(MALE) 10P	1	
CN133		VJP1237R	CONNECTOR(MALE) 10P	1	
CN134		VJP1931T	CONNECTOR (MALE)	1	
CN135		VJP1233T	CONNECTOR(MALE) 6P	1	
CN136		VJP1932T	CONNECTOR (MALE)	1	
CN137		VJP1232T	CONNECTOR(MALE) 5P	1	
CN138		VJP1237T	CONNECTOR(MALE) 10P	1	
CN139		VJP1234T	CONNECTOR(MALE) 7P	1	
D1		MA165	DIODE	1	
D5,D6		MA165	DIODE	2	
D101-08		OA95	DIODE	8	

Ref.No.		Part No.	Part Name & Description	Pcs	Remarks
IC1-C3		MC14053BCP	IC	3	
IC4,C5		MC14021BCP	IC	2	
IC6		MC14050BCP	IC	1	
IC7		AN78L12	IC	1	
IC8		AN79L12	IC	1	
IC9		AN79L05	IC	1	
IC101-03		NJM4558D	IC	3	
IC104		AN78L09	IC	1	
IC105		AN79L09	IC	1	
P150		VJP2891A020	CONNECTOR (MALE)	1	
Q1		UN1212	TRANSISTOR-RESISTOR	1	
Q101		2SD636	TRANSISTOR	1	
Q102		2SD1330	TRANSISTOR	1	
Q103		2SD636	TRANSISTOR	1	
Q104		2SD1330	TRANSISTOR	1	
Q105		2SD636	TRANSISTOR	1	
Q106		2SD1330	TRANSISTOR	1	
Q107		2SD636	TRANSISTOR	1	
Q108		2SD1330	TRANSISTOR	1	
			RESISTORS		
R7,R8		ERDS2TJ223	C.RESISTOR 1/4W 22K	2	
R9		ERDS2TJ103	C.RESISTOR 1/4W 10K	1	
R10-16		ERDS2TJ103	C.RESISTOR 1/4W 10K	7	
R25-32		ERDS2TJ103	C.RESISTOR 1/4W 10K	8	
R33,34		ERDS2TJ223	C.RESISTOR 1/4W 22K	2	
R35		ERDS2TJ102	C.RESISTOR 1/4W 1K	1	
R36		ERDS2TJ474	C.RESISTOR 1/4W 470K	1	
R37		ERDS2TJ103	C.RESISTOR 1/4W 10K	1	
R38,39		ERDS2TJ223	C.RESISTOR 1/4W 22K	2	
R40		ERDS2TJ474	C.RESISTOR 1/4W 470K	1	
R41		ERDS2TJ103	C.RESISTOR 1/4W 10K	1	
R42		ERDS2TJ223	C.RESISTOR 1/4W 22K	1	
R45-48		ERDS2TJ103	C.RESISTOR 1/4W 10K	4	
R72,73		ERDS2TJ223	C.RESISTOR 1/4W 22K	2	
R101		ERDS2TJ682	C.RESISTOR 1/4W 6.8K	1	
R102,03		ERDS2TJ223	C.RESISTOR 1/4W 22K	2	
R104		ERDS2TJ221	C.RESISTOR 1/4W 220	1	
R105		ERDS2TJ222	C.RESISTOR 1/4W 2.2K	1	
R106,07		ERDS2TJ103	C.RESISTOR 1/4W 10K	2	
R108		ERDS2TJ682	C.RESISTOR 1/4W 6.8K	1	
R109,10		ERDS2TJ223	C.RESISTOR 1/4W 22K	2	
R111		ERDS2TJ221	C.RESISTOR 1/4W 220	1	
R112		ERDS2TJ222	C.RESISTOR 1/4W 2.2K	1	
R113,14		ERDS2TJ103	C.RESISTOR 1/4W 10K	2	
R115		ERDS2TJ682	C.RESISTOR 1/4W 6.8K	1	
R116,17		ERDS2TJ223	C.RESISTOR 1/4W 22K	2	
R118		ERDS2TJ221	C.RESISTOR 1/4W 220	1	
R119		ERDS2TJ222	C.RESISTOR 1/4W 2.2K	1	
R120,21		ERDS2TJ103	C.RESISTOR 1/4W 10K	2	
R122		ERDS2TJ682	C.RESISTOR 1/4W 6.8K	1	
R123,24		ERDS2TJ223	C.RESISTOR 1/4W 22K	2	
R125		ERDS2TJ221	C.RESISTOR 1/4W 220	1	
R126		ERDS2TJ222	C.RESISTOR 1/4W 2.2K	1	
R127-29		ERDS2TJ103	C.RESISTOR 1/4W 10K	3	
R130		ERDS2TJ102	C.RESISTOR 1/4W 1K	1	
R131		ERDS2TJ104	C.RESISTOR 1/4W 100K	1	
R132		ERDS2TJ102	C.RESISTOR 1/4W 1K	1	
R133		ERDS2TJ562	C.RESISTOR 1/4W 5.6K	1	
R134		ERDS2TJ104	C.RESISTOR 1/4W 100K	1	
R135		ERDS2TJ103	C.RESISTOR 1/4W 10K	1	
R136		ERDS2TJ102	C.RESISTOR 1/4W 1K	1	
R137		ERDS2TJ104	C.RESISTOR 1/4W 100K	1	
R138		ERDS2TJ102	C.RESISTOR 1/4W 1K	1	

Refer to the P.C.BOARDS LIST, page 6-1-1, before using this page.

Ref.No.		Part No.	Part Name & Description	Pcs	Remarks
R139		ERDS2TJ562	C.RESISTOR 1/4W 5.6K	1	
R140		ERDS2TJ104	C.RESISTOR 1/4W 100K	1	
RA1,A2		EXBF9E103J	COMBI.R-R 10K	2	
SW1-W3		VSS0119	SWITCH	3	
SW5		VSS0119	SWITCH	1	
SW7		VSS0119	SWITCH	1	
SW10		VSS0119	SWITCH	1	
VR8		EVUF2AE20B53	V.RESISTOR 5K	1	
VR9		VRV0109B502	V.RESISTOR 5K	1	
VR10,11		EVUF2AE20A14	V.RESISTOR 10K	2	
VR12,13		VRV0109B502	V.RESISTOR 5K	2	
VR101-04		VRV0110B203	V.RESISTOR 5K	4	
			MISCELLANEOUS		
		VMP2600	P.C.B. HOLDER ANGLE	1	
		XTV3+6F	SCREW	2	
	■	VEP80631A	P.C.BOARD W/COMPONENT		FOR AU-65-E,B
			FRONT INTERFACE		
			CAPACITORS		
C1-C9		ECKF1H103ZF	C.CAPACITOR 50V 0.01U	9	
C10-22		ECKF1H103ZF	C.CAPACITOR 50V 0.01U	13	
C23		ECQV1H104JZ	P.CAPACITOR 50V 0.1U	1	
C24		ECKF1H391KB	C.CAPACITOR 50V 390P	1	
C25		ECEA1CU101	E.CAPACITOR 16V 100U	1	
C26		ECKF1H103ZF	C.CAPACITOR 50V 0.01U	1	
C27		ECEA1CU101	E.CAPACITOR 16V 100U	1	
C28		ECKF1H103ZF	C.CAPACITOR 50V 0.01U	1	
C29		ECEA1CU330	E.CAPACITOR 16V 33U	1	
C30		ECKF1H103ZF	C.CAPACITOR 50V 0.01U	1	
C33-35		ECEA1CU101	E.CAPACITOR 16V 100U	3	
C101		ECQV1H274JZ	P.CAPACITOR 50V 0.27U	1	
C102		ECEA1CU100	E.CAPACITOR 16V 10U	1	
C103		ECEA1HU4R7	E.CAPACITOR 50V 4.7U	1	
C104		ECQV1H274JZ	P.CAPACITOR 50V 0.27U	1	
C105		ECEA1CU100	E.CAPACITOR 16V 10U	1	
C106		ECEA1HU4R7	E.CAPACITOR 50V 4.7U	1	
C107		ECQV1H274JZ	P.CAPACITOR 50V 0.27U	1	
C108		ECEA1CU100	E.CAPACITOR 16V 10U	1	
C109		ECEA1HU4R7	E.CAPACITOR 50V 4.7U	1	
C110		ECQV1H274JZ	P.CAPACITOR 50V 0.27U	1	
C111		ECEA1CU100	E.CAPACITOR 16V 10U	1	
C112		ECEA1HU4R7	E.CAPACITOR 50V 4.7U	1	
C113,14		ECEA1CBZ100	E.CAPACITOR 16V 10U	2	
C115-18		ECEA1CPZ101	E.CAPACITOR 16V 100U	4	
CN130		VJP1931T	CONNECTOR(MALE)	1	
CN131		VJP1239T	CONNECTOR(MALE) 12P	1	
CN132		VJP1237T	CONNECTOR(MALE) 10P	1	
CN133		VJP1237R	CONNECTOR(MALE) 10P	1	
CN134		VJP1931T	CONNECTOR(MALE)	1	

Ref.No.		Part No.	Part Name & Description	Pcs	Remarks
CN135		VJP1233T	CONNECTOR(MALE) 6P	1	
CN136		VJP1932T	CONNECTOR(MALE)	1	
CN137		VJP1232T	CONNECTOR(MALE) 5P	1	
CN138		VJP1237T	CONNECTOR(MALE) 10P	1	
CN139		VJP1234T	CONNECTOR(MALE) 7P	1	
D1-D3		MA165	DIODE	3	
D5,D6		MA165	DIODE	2	
D101-08		OA95	DIODE	8	
IC1-C3		MC14053BCP	IC	3	
IC4,C5		MC14021BCP	IC	2	
IC6		MC14050BCP	IC	1	
IC7		AN78L12	IC	1	
IC8		AN79L12	IC	1	
IC9		AN79L05	IC	1	
IC101-03		NJM4558D	IC	3	
IC104		AN78L09	IC	1	
IC105		AN79L09	IC	1	
P150		VJP2891A020	CONNECTOR(MALE)	1	
Q1		UN1212	TRANSISTOR-RESISTOR	1	
Q2		UN1213	TRANSISTOR-RESISTOR	1	
Q3,Q4		2SD636	TRANSISTOR	2	
Q101		2SD636	TRANSISTOR	1	
Q102		2SD1330	TRANSISTOR	1	
Q103		2SD636	TRANSISTOR	1	
Q104		2SD1330	TRANSISTOR	1	
Q105		2SD636	TRANSISTOR	1	
Q106		2SD1330	TRANSISTOR	1	
Q107		2SD636	TRANSISTOR	1	
Q108		2SD1330	TRANSISTOR	1	
			RESISTORS		
R7,R8		ERDS2TJ223	C.RESISTOR 1/4W 22K	2	
R9		ERDS2TJ103	C.RESISTOR 1/4W 10K	1	
R10-16		ERDS2TJ103	C.RESISTOR 1/4W 10K	7	
R25-32		ERDS2TJ103	C.RESISTOR 1/4W 10K	8	
R33,34		ERDS2TJ223	C.RESISTOR 1/4W 22K	2	
R35		ERDS2TJ102	C.RESISTOR 1/4W 1K	1	
R36		ERDS2TJ474	C.RESISTOR 1/4W 470K	1	
R37		ERDS2TJ103	C.RESISTOR 1/4W 10K	1	
R38,39		ERDS2TJ223	C.RESISTOR 1/4W 22K	2	
R40		ERDS2TJ474	C.RESISTOR 1/4W 470K	1	
R41		ERDS2TJ103	C.RESISTOR 1/4W 10K	1	
R42		ERDS2TJ223	C.RESISTOR 1/4W 22K	1	
R45-48		ERDS2TJ103	C.RESISTOR 1/4W 10K	4	
R49,50		ERDS2TJ151	C.RESISTOR 1/4W 150	2	
R51,52		ERDS2TJ103	C.RESISTOR 1/4W 10K	2	
R53		ERDS2TJ473	C.RESISTOR 1/4W 47K	1	
R54,55		ERDS2TJ103	C.RESISTOR 1/4W 10K	2	
R56		ERDS2TJ473	C.RESISTOR 1/4W 47K	1	
R72,73		ERDS2TJ223	C.RESISTOR 1/4W 22K	2	
R101		ERDS2TJ682	C.RESISTOR 1/4W 6.8K	1	
R102,03		ERDS2TJ223	C.RESISTOR 1/4W 22K	2	
R104		ERDS2TJ221	C.RESISTOR 1/4W 220	1	
R105		ERDS2TJ222	C.RESISTOR 1/4W 2.2K	1	
R106,07		ERDS2TJ103	C.RESISTOR 1/4W 10K	2	
R108		ERDS2TJ682	C.RESISTOR 1/4W 6.8K	1	
R109,10		ERDS2TJ223	C.RESISTOR 1/4W 22K	2	
R111		ERDS2TJ221	C.RESISTOR 1/4W 220	1	
R112		ERDS2TJ222	C.RESISTOR 1/4W 2.2K	1	
R113,14		ERDS2TJ103	C.RESISTOR 1/4W 10K	2	
R115		ERDS2TJ682	C.RESISTOR 1/4W 6.8K	1	

Refer to the P.C.BOARDS LIST, page 6-1-1, before using this page.

Ref.No.		Part No.	Part Name & Description	Pcs	Remarks
R116,17		ERDS2TJ223	C.RESISTOR 1/4W 22K	2	
R118		ERDS2TJ221	C.RESISTOR 1/4W 220	1	
R119		ERDS2TJ222	C.RESISTOR 1/4W 2.2K	1	
R120,21		ERDS2TJ103	C.RESISTOR 1/4W 10K	2	
R122		ERDS2TJ682	C.RESISTOR 1/4W 6.8K	1	
R123,24		ERDS2TJ223	C.RESISTOR 1/4W 22K	2	
R125		ERDS2TJ221	C.RESISTOR 1/4W 220	1	
R126		ERDS2TJ222	C.RESISTOR 1/4W 2.2K	1	
R127-29		ERDS2TJ103	C.RESISTOR 1/4W 10K	3	
R130		ERDS2TJ102	C.RESISTOR 1/4W 1K	1	
R131		ERDS2TJ104	C.RESISTOR 1/4W 100K	1	
R132		ERDS2TJ102	C.RESISTOR 1/4W 1K	1	
R133		ERDS2TJ562	C.RESISTOR 1/4W 5.6K	1	
R134		ERDS2TJ104	C.RESISTOR 1/4W 100K	1	
R135		ERDS2TJ103	C.RESISTOR 1/4W 10K	1	
R136		ERDS2TJ102	C.RESISTOR 1/4W 1K	1	
R137		ERDS2TJ104	C.RESISTOR 1/4W 100K	1	
R138		ERDS2TJ102	C.RESISTOR 1/4W 1K	1	
R139		ERDS2TJ562	C.RESISTOR 1/4W 5.6K	1	
R140		ERDS2TJ104	C.RESISTOR 1/4W 100K	1	
RA1,A2		EXBF9E103J	COMBI.R-R 10K	2	
SW1-W5		VSS0119	SWITCH	5	
SW6,W7		VSS0243	SWITCH	2	
SW8,W9		VSS0119	SWITCH	2	
SW10,11		VSS0119	SWITCH	2	
VR8		EVUF2AE20B53	V.RESISTOR 5K	1	
VR9		VRV0109B502	V.RESISTOR 5K	1	
VR10,11		EVUF2AE20A14	V.RESISTOR 10K	2	
VR12,13		VRV0109B502	V.RESISTOR 5K	2	
VR101-04		VRV0110B203	V.RESISTOR 5K	4	
			MISCELLANEOUS		
		VMP2600	P.C.B. HOLDER ANGLE	1	
		XTV3+6F	SCREW	2	
	■	VEP80631B	P.C.BOARD W/COMPONENT		FOR AU-63-E,B
			FRONT INTERFACE		
			CAPACITORS		
C1-C9		ECKF1H103ZF	C.CAPACITOR 50V 0.01U	9	
C10,11		ECKF1H103ZF	C.CAPACITOR 50V 0.01U	2	
C13		ECKF1H103ZF	C.CAPACITOR 50V 0.01U	1	
C17-22		ECKF1H103ZF	C.CAPACITOR 50V 0.01U	6	
C23		ECQV1H104JZ	P.CAPACITOR 50V 0.1U	1	
C24		ECKF1H391KB	C.CAPACITOR 50V 390P	1	
C25		ECEA1CU101	E.CAPACITOR 16V 100U	1	
C26		ECKF1H103ZF	C.CAPACITOR 50V 0.01U	1	
C27		ECEA1CU101	E.CAPACITOR 16V 100U	1	
C28		ECKF1H103ZF	C.CAPACITOR 50V 0.01U	1	
C29		ECEA1CU330	E.CAPACITOR 16V 33U	1	
C30		ECKF1H103ZF	C.CAPACITOR 50V 0.01U	1	
C33-35		ECEA1CU101	E.CAPACITOR 16V 100U	3	
C101		ECQV1H274JZ	P.CAPACITOR 50V 0.27U	1	
C102		ECEA1CU100	E.CAPACITOR 16V 10U	1	

Ref.No.		Part No.	Part Name & Description	Pcs	Remarks
C103		ECEA1HU4R7	E.CAPACITOR 50V 4.7U	1	
C104		ECQV1H274JZ	P.CAPACITOR 50V 0.27U	1	
C105		ECEA1CU100	E.CAPACITOR 16V 10U	1	
C106		ECEA1HU4R7	E.CAPACITOR 50V 4.7U	1	
C107		ECQV1H274JZ	P.CAPACITOR 50V 0.27U	1	
C108		ECEA1CU100	E.CAPACITOR 16V 10U	1	
C109		ECEA1HU4R7	E.CAPACITOR 50V 4.7U	1	
C110		ECQV1H274JZ	P.CAPACITOR 50V 0.27U	1	
C111		ECEA1CU100	E.CAPACITOR 16V 10U	1	
C112		ECEA1HU4R7	E.CAPACITOR 50V 4.7U	1	
C113,14		ECEA1CBZ100	E.CAPACITOR 16V 10U	2	
C115-18		ECEA1CPZ101	E.CAPACITOR 16V 100U	4	
CN130		VJP1931T	CONNECTOR(MALE)	1	
CN131		VJP1239T	CONNECTOR(MALE) 12P	1	
CN132		VJP1237T	CONNECTOR(MALE) 10P	1	
CN133		VJP1237R	CONNECTOR(MALE) 10P	1	
CN134		VJP1931T	CONNECTOR(MALE)	1	
CN135		VJP1233T	CONNECTOR(MALE) 6P	1	
CN136		VJP1932T	CONNECTOR(MALE)	1	
CN137		VJP1232T	CONNECTOR(MALE) 5P	1	
CN138		VJP1237T	CONNECTOR(MALE) 10P	1	
CN139		VJP1234T	CONNECTOR(MALE) 7P	1	
D5,D6		MA165	DIODE	2	
D101-08		OA95	DIODE	8	
IC1-C3		MC14053BCP	IC	3	
IC4,C5		MC14021BCP	IC	2	
IC6		MC14050BCP	IC	1	
IC7		AN78L12	IC	1	
IC8		AN79L12	IC	1	
IC9		AN79L05	IC	1	
IC101-03		NJM4558D	IC	3	
IC104		AN78L09	IC	1	
IC105		AN79L09	IC	1	
P150		VJP2891A020	CONNECTOR(MALE)	1	
Q1		UN1212	TRANSISTOR-RESISTOR	1	
Q101		2SD636	TRANSISTOR	1	
Q102		2SD1330	TRANSISTOR	1	
Q103		2SD636	TRANSISTOR	1	
Q104		2SD1330	TRANSISTOR	1	
Q105		2SD636	TRANSISTOR	1	
Q106		2SD1330	TRANSISTOR	1	
Q107		2SD636	TRANSISTOR	1	
Q108		2SD1330	TRANSISTOR	1	
			RESISTORS		
R7,R8		ERDS2TJ223	C.RESISTOR 1/4W 22K	2	
R9		ERDS2TJ103	C.RESISTOR 1/4W 10K	1	
R10-16		ERDS2TJ103	C.RESISTOR 1/4W 10K	7	
R25-32		ERDS2TJ103	C.RESISTOR 1/4W 10K	8	
R33,34		ERDS2TJ223	C.RESISTOR 1/4W 22K	2	
R35		ERDS2TJ102	C.RESISTOR 1/4W 1K	1	
R36		ERDS2TJ474	C.RESISTOR 1/4W 470K	1	
R37		ERDS2TJ103	C.RESISTOR 1/4W 10K	1	
R38,39		ERDS2TJ223	C.RESISTOR 1/4W 22K	2	
R40		ERDS2TJ474	C.RESISTOR 1/4W 470K	1	
R41		ERDS2TJ103	C.RESISTOR 1/4W 10K	1	
R42		ERDS2TJ223	C.RESISTOR 1/4W 22K	1	
R45-48		ERDS2TJ103	C.RESISTOR 1/4W 10K	4	

Refer to the P.C.BOARDS LIST, page 6-1-1, before using this page.

Ref.No.		Part No.	Part Name & Description	Pcs	Remarks
R72,73		ERDS2TJ223	C.RESISTOR 1/4W 22K	2	
R101		ERDS2TJ682	C.RESISTOR 1/4W 6.8K	1	
R102,03		ERDS2TJ223	C.RESISTOR 1/4W 22K	2	
R104		ERDS2TJ221	C.RESISTOR 1/4W 220	1	
R105		ERDS2TJ222	C.RESISTOR 1/4W 2.2K	1	
R106,07		ERDS2TJ103	C.RESISTOR 1/4W 10K	2	
R108		ERDS2TJ682	C.RESISTOR 1/4W 6.8K	1	
R109,10		ERDS2TJ223	C.RESISTOR 1/4W 22K	2	
R111		ERDS2TJ221	C.RESISTOR 1/4W 220	1	
R112		ERDS2TJ222	C.RESISTOR 1/4W 2.2K	1	
R113,14		ERDS2TJ103	C.RESISTOR 1/4W 10K	2	
R115		ERDS2TJ682	C.RESISTOR 1/4W 6.8K	1	
R116,17		ERDS2TJ223	C.RESISTOR 1/4W 22K	2	
R118		ERDS2TJ221	C.RESISTOR 1/4W 220	1	
R119		ERDS2TJ222	C.RESISTOR 1/4W 2.2K	1	
R120,21		ERDS2TJ103	C.RESISTOR 1/4W 10K	2	
R122		ERDS2TJ682	C.RESISTOR 1/4W 6.8K	1	
R123,24		ERDS2TJ223	C.RESISTOR 1/4W 22K	2	
R125		ERDS2TJ221	C.RESISTOR 1/4W 220	1	
R126		ERDS2TJ222	C.RESISTOR 1/4W 2.2K	1	
R127-29		ERDS2TJ103	C.RESISTOR 1/4W 10K	3	
R130		ERDS2TJ102	C.RESISTOR 1/4W 1K	1	
R131		ERDS2TJ104	C.RESISTOR 1/4W 100K	1	
R132		ERDS2TJ102	C.RESISTOR 1/4W 1K	1	
R133		ERDS2TJ562	C.RESISTOR 1/4W 5.6K	1	
R134		ERDS2TJ104	C.RESISTOR 1/4W 100K	1	
R135		ERDS2TJ103	C.RESISTOR 1/4W 10K	1	
R136		ERDS2TJ102	C.RESISTOR 1/4W 1K	1	
R137		ERDS2TJ104	C.RESISTOR 1/4W 100K	1	
R138		ERDS2TJ102	C.RESISTOR 1/4W 1K	1	
R139		ERDS2TJ562	C.RESISTOR 1/4W 5.6K	1	
R140		ERDS2TJ104	C.RESISTOR 1/4W 100K	1	
RA1,A2		EXBF9E103J	COMBI.R-R 10K	2	
SW1-W3		VSS0119	SWITCH	3	
SW5		VSS0119	SWITCH	1	
SW7		VSS0243	SWITCH	1	
SW10		VSS0119	SWITCH	1	
VR8		EVUF2AE20B53	V.RESISTOR 5K	1	
VR9		VRV0109B502	V.RESISTOR 5K	1	
VR10,11		EVUF2AE20A14	V.RESISTOR 10K	2	
VR12,13		VRV0109B502	V.RESISTOR 5K	2	
VR101-04		VRV0110B203	V.RESISTOR 5K	4	
			MISCELLANEOUS		
		VMP2600	P.C.B. HOLDER ANGLE	1	
		XTV3+6F	SCREW	2	
	■	VEP80631C	P.C.BOARD W/COMPONENT		FOR AU-62-E,B
			FRONT INTERFACE		
			CAPACITORS		
C1-C9		ECKF1H103ZF	C.CAPACITOR 50V 0.01U	9	
C10,11		ECKF1H103ZF	C.CAPACITOR 50V 0.01U	2	
C13		ECKF1H103ZF	C.CAPACITOR 50V 0.01U	1	

Ref.No.		Part No.	Part Name & Description	Pcs	Remarks
C15		ECKF1H103ZF	C.CAPACITOR 50V 0.01U	1	
C17-22		ECKF1H103ZF	C.CAPACITOR 50V 0.01U	6	
C23		ECQV1H104JZ	P.CAPACITOR 50V 0.1U	1	
C24		ECKF1H391KB	C.CAPACITOR 50V 390P	1	
C25		ECEA1CU101	E.CAPACITOR 16V 100U	1	
C26		ECKF1H103ZF	C.CAPACITOR 50V 0.01U	1	
C27		ECEA1CU101	E.CAPACITOR 16V 100U	1	
C28		ECKF1H103ZF	C.CAPACITOR 50V 0.01U	1	
C29		ECEA1CU330	E.CAPACITOR 16V 33U	1	
C30		ECKF1H103ZF	C.CAPACITOR 50V 0.01U	1	
C33-35		ECEA1CU101	E.CAPACITOR 16V 100U	3	
C101		ECQV1H274JZ	P.CAPACITOR 50V 0.27U	1	
C102		ECEA1CU100	E.CAPACITOR 16V 10U	1	
C103		ECEA1HU4R7	E.CAPACITOR 50V 4.7U	1	
C104		ECQV1H274JZ	P.CAPACITOR 50V 0.27U	1	
C105		ECEA1CU100	E.CAPACITOR 16V 10U	1	
C106		ECEA1HU4R7	E.CAPACITOR 50V 4.7U	1	
C107		ECQV1H274JZ	P.CAPACITOR 50V 0.27U	1	
C108		ECEA1CU100	E.CAPACITOR 16V 10U	1	
C109		ECEA1HU4R7	E.CAPACITOR 50V 4.7U	1	
C110		ECQV1H274JZ	P.CAPACITOR 50V 0.27U	1	
C111		ECEA1CU100	E.CAPACITOR 16V 10U	1	
C112		ECEA1HU4R7	E.CAPACITOR 50V 4.7U	1	
C113,14		ECEA1CB2100	E.CAPACITOR 16V 10U	2	
C115-18		ECEA1CPZ101	E.CAPACITOR 16V 100U	4	
CN130		VJP1931T	CONNECTOR(MALE)	1	
CN131		VJP1239T	CONNECTOR(MALE) 12P	1	
CN132		VJP1237T	CONNECTOR(MALE) 10P	1	
CN133		VJP1237R	CONNECTOR(MALE) 10P	1	
CN134		VJP1931T	CONNECTOR(MALE)	1	
CN135		VJP1233T	CONNECTOR(MALE) 6P	1	
CN136		VJP1932T	CONNECTOR(MALE)	1	
CN137		VJP1232T	CONNECTOR(MALE) 5P	1	
CN138		VJP1237T	CONNECTOR(MALE) 10P	1	
CN139		VJP1234T	CONNECTOR(MALE) 7P	1	
D6		MA165	DIODE	1	
D101-08		OA95	DIODE	8	
IC1-C3		MC14053BCP	IC	3	
IC4,C5		MC14021BCP	IC	2	
IC6		MC14050BCP	IC	1	
IC7		AN78L12	IC	1	
IC8		AN79L12	IC	1	
IC9		AN79L05	IC	1	
IC101-03		NJM4558D	IC	3	
IC104		AN78L09	IC	1	
IC105		AN79L09	IC	1	
P150		VJP2891A020	CONNECTOR(MALE)	1	
Q1		UN1212	TRANSISTOR-RESISTOR	1	
Q101		2SD636	TRANSISTOR	1	
Q102		2SD1330	TRANSISTOR	1	
Q103		2SD636	TRANSISTOR	1	
Q104		2SD1330	TRANSISTOR	1	
Q105		2SD636	TRANSISTOR	1	
Q106		2SD1330	TRANSISTOR	1	
Q107		2SD636	TRANSISTOR	1	
Q108		2SD1330	TRANSISTOR	1	
			RESISTORS		

Refer to the P.C.BOARDS LIST, page 6-1-1, before using this page.

Ref.No.		Part No.	Part Name & Description	Pcs	Remarks
R7,R8		ERDS2TJ223	C.RESISTOR 1/4W 22K	2	
R9		ERDS2TJ103	C.RESISTOR 1/4W 10K	1	
R10-16		ERDS2TJ103	C.RESISTOR 1/4W 10K	7	
R25-32		ERDS2TJ103	C.RESISTOR 1/4W 10K	8	
R33,34		ERDS2TJ223	C.RESISTOR 1/4W 22K	2	
R35		ERDS2TJ102	C.RESISTOR 1/4W 1K	1	
R36		ERDS2TJ474	C.RESISTOR 1/4W 470K	1	
R37		ERDS2TJ103	C.RESISTOR 1/4W 10K	1	
R38,39		ERDS2TJ223	C.RESISTOR 1/4W 22K	2	
R40		ERDS2TJ474	C.RESISTOR 1/4W 470K	1	
R41		ERDS2TJ103	C.RESISTOR 1/4W 10K	1	
R42		ERDS2TJ223	C.RESISTOR 1/4W 22K	1	
R45-48		ERDS2TJ103	C.RESISTOR 1/4W 10K	4	
R72,73		ERDS2TJ223	C.RESISTOR 1/4W 22K	2	
R101		ERDS2TJ682	C.RESISTOR 1/4W 6.8K	1	
R102,03		ERDS2TJ223	C.RESISTOR 1/4W 22K	2	
R104		ERDS2TJ221	C.RESISTOR 1/4W 220	1	
R105		ERDS2TJ222	C.RESISTOR 1/4W 2.2K	1	
R106,07		ERDS2TJ103	C.RESISTOR 1/4W 10K	2	
R108		ERDS2TJ682	C.RESISTOR 1/4W 6.8K	1	
R109,10		ERDS2TJ223	C.RESISTOR 1/4W 22K	2	
R111		ERDS2TJ221	C.RESISTOR 1/4W 220	1	
R112		ERDS2TJ222	C.RESISTOR 1/4W 2.2K	1	
R113,14		ERDS2TJ103	C.RESISTOR 1/4W 10K	2	
R115		ERDS2TJ682	C.RESISTOR 1/4W 6.8K	1	
R116,17		ERDS2TJ223	C.RESISTOR 1/4W 22K	2	
R118		ERDS2TJ221	C.RESISTOR 1/4W 220	1	
R119		ERDS2TJ222	C.RESISTOR 1/4W 2.2K	1	
R120,21		ERDS2TJ103	C.RESISTOR 1/4W 10K	2	
R122		ERDS2TJ682	C.RESISTOR 1/4W 6.8K	1	
R123,24		ERDS2TJ223	C.RESISTOR 1/4W 22K	2	
R125		ERDS2TJ221	C.RESISTOR 1/4W 220	1	
R126		ERDS2TJ222	C.RESISTOR 1/4W 2.2K	1	
R127-29		ERDS2TJ103	C.RESISTOR 1/4W 10K	3	
R130		ERDS2TJ102	C.RESISTOR 1/4W 1K	1	
R131		ERDS2TJ104	C.RESISTOR 1/4W 100K	1	
R132		ERDS2TJ102	C.RESISTOR 1/4W 1K	1	
R133		ERDS2TJ562	C.RESISTOR 1/4W 5.6K	1	
R134		ERDS2TJ104	C.RESISTOR 1/4W 100K	1	
R135		ERDS2TJ103	C.RESISTOR 1/4W 10K	1	
R136		ERDS2TJ102	C.RESISTOR 1/4W 1K	1	
R137		ERDS2TJ104	C.RESISTOR 1/4W 100K	1	
R138		ERDS2TJ102	C.RESISTOR 1/4W 1K	1	
R139		ERDS2TJ562	C.RESISTOR 1/4W 5.6K	1	
R140		ERDS2TJ104	C.RESISTOR 1/4W 100K	1	
RA1,A2		EXBF9E103J	COMBI.R-R 10K	2	
SW1-W3		VSS0119	SWITCH	3	
SW5		VSS0119	SWITCH	1	
SW7		VSS0243	SWITCH	1	
SW10		VSS0119	SWITCH	1	
VR8		EVUF2AE20B53	V.RESISTOR 5K	1	
VR9		VRV0109B502	V.RESISTOR 5K	1	
VR10,11		EVUF2AE20A14	V.RESISTOR 10K	2	
VR12,13		VRV0109B502	V.RESISTOR 5K	2	
VR101-04		VRV0110B203	V.RESISTOR 5K	4	
			MISCELLANEOUS		
		VMP2600	P.C.B. HOLDER ANGLE	1	
		XTV3+6F	SCREW	2	

Ref.No.		Part No.	Part Name & Description	Pcs	Remarks
	■	VEP80440A	P.C.BOARD W/COMPONENT		
			FRONT LOADING		
			MISCELLANEOUS		
		VJP1154	CONNECTOR (MALE)	1	
		VJP1246T	CONNECTOR (MALE)	1	
		VJP1249T	CONNECTOR (MALE)	1	
	■	VEP80559A	P.C.BOARD W/COMPONENT		FOR AU-65-P,E,B
			FRONT MODE SELECT CIRCUIT		
			CAPACITORS		
C1-C4		ECEA1CKG470	E.CAPACITOR 16V 47U	4	
CN180		VJP1237T	CONNECTOR(MALE) 10P	1	
CN181		VJP1511T	CONNECTOR(MALE)	1	
D1-D4		VLL0047	DIODE	4	
IC1		UPC4557C	IC	1	
P153		VJP1144	CONNECTOR (MALE)	1	
P155		VJP1143	CONNECTOR(MALE)	1	
Q1,Q2		2SB641	TRANSISTOR	2	(Q,R)
Q3		2SD638	TRANSISTOR	1	(Q,R)
Q4		2SB643	TRANSISTOR	1	(Q,R)
			RESISTORS		
R1,R2		ERDS2TJ331	C.RESISTOR 1/4W 330	2	
R3		ERDS2TJ332	C.RESISTOR 1/4W 3.3K	1	
R4		ERDS2TJ153	C.RESISTOR 1/4W 15K	1	
R5		ERDS2TJ332	C.RESISTOR 1/4W 3.3K	1	
R6		ERDS2TJ153	C.RESISTOR 1/4W 15K	1	
R7,R8		ERDS2TJ560	C.RESISTOR 1/4W 56	2	
R9		ERDS2TJ562	C.RESISTOR 1/4W 5.6K	1	
R10,11		ERDS2TJ473	C.RESISTOR 1/4W 47K	2	
R12		ERDS2TJ562	C.RESISTOR 1/4W 5.6K	1	
R13,14		ERDS2TJ151	C.RESISTOR 1/4W 150	2	
SW1		VST0079	SWITCH	1	
SW2,W3		VST0080	SWITCH	2	
SW5,W6		VST0080	SWITCH	2	
			MISCELLANEOUS		
		VMX1858	SPACER	4	

Refer to the P.C.BOARDS LIST, page 6-1-1, before using this page.

Ref.No.		Part No.	Part Name & Description	Pcs	Remarks
	■	VEP80559C	P.C.BOARD W/COMPONENT		FOR AU-62-P,E,B
			FRONT MODE SELECT CIRCUIT		
			CAPACITORS		
C1-C4		ECEA1CKG470	E.CAPACITOR 16V 47U	4	
CN180		VJP1237T	CONNECTOR(MALE) 10P	1	
CN181		VJP1511T	CONNECTOR(MALE)	1	
D1,D2		VLL0047	DIODE	2	
IC1		UPC4557C	IC	1	
P153		VJP1144	CONNECTOR(MALE)	1	
P155		VJP1143	CONNECTOR(MALE)	1	
Q1,Q2		2SB641	TRANSISTOR	2	(Q,R)
Q3		2SD638	TRANSISTOR	1	(Q,R)
Q4		2SB643	TRANSISTOR	1	(Q,R)
			RESISTORS		
R1,R2		ERDS2TJ331	C.RESISTOR 1/4W 330	2	
R3		ERDS2TJ332	C.RESISTOR 1/4W 3.3K	1	
R4		ERDS2TJ153	C.RESISTOR 1/4W 15K	1	
R5		ERDS2TJ332	C.RESISTOR 1/4W 3.3K	1	
R6		ERDS2TJ153	C.RESISTOR 1/4W 15K	1	
R7,R8		ERDS2TJ560	C.RESISTOR 1/4W 56	2	
R9		ERDS2TJ562	C.RESISTOR 1/4W 5.6K	1	
R10,11		ERDS2TJ473	C.RESISTOR 1/4W 47K	2	
R12		ERDS2TJ562	C.RESISTOR 1/4W 5.6K	1	
R13,14		ERDS2TJ151	C.RESISTOR 1/4W 150	2	
SW1		VST0079	SWITCH	1	
SW2		VST0080	SWITCH	1	
SW6		VST0080	SWITCH	1	
			MISCELLANEOUS		
		VMX1858	COLOR SPACER	2	
	■	VEP80559D	P.C.BOARD W/COMPONENT		FOR AU-63-P,E,B
			FRONT MODE SELECT CIRCUIT		

Ref.No.		Part No.	Part Name & Description	Pcs	Remarks
			CAPACITORS		
C1-C4		ECEA1CKG470	E.CAPACITOR 16V 47U	4	
CN180		VJP1237T	CONNECTOR(MALE) 10P	1	
CN181		VJP1511T	CONNECTOR(MALE)	1	
D1,D2		VLL0047	DIODE	2	
IC1		UPC4557C	IC	1	
P153		VJP1144	CONNECTOR(MALE)	1	
P155		VJP1143	CONNECTOR(MALE)	1	
Q1,Q2		2SB641	TRANSISTOR	2	(Q,R)
Q3		2SD638	TRANSISTOR	1	(Q,R)
Q4		2SB643	TRANSISTOR	1	(Q,R)
			RESISTORS		
R1,R2		ERDS2TJ331	C.RESISTOR 1/4W 330	2	
R3		ERDS2TJ332	C.RESISTOR 1/4W 3.3K	1	
R4		ERDS2TJ153	C.RESISTOR 1/4W 15K	1	
R5		ERDS2TJ332	C.RESISTOR 1/4W 3.3K	1	
R6		ERDS2TJ153	C.RESISTOR 1/4W 15K	1	
R7,R8		ERDS2TJ560	C.RESISTOR 1/4W 56	2	
R9		ERDS2TJ562	C.RESISTOR 1/4W 5.6K	1	
R10,11		ERDS2TJ473	C.RESISTOR 1/4W 47K	2	
R12		ERDS2TJ562	C.RESISTOR 1/4W 5.6K	1	
R13,14		ERDS2TJ151	C.RESISTOR 1/4W 150	2	
SW1		VST0079	SWITCH	1	
SW2		VST0080	SWITCH	1	
SW5,W6		VST0080	SWITCH	2	
			MISCELLANEOUS		
		VMX1858	COLOR SPACER	2	
	■	VEP86050C	P.C.BOARD W/COMPONENT		FOR AU-65-P
			FRONT A		
			CAPACITORS		
C1-C8		ECKF1H103ZF	C.CAPACITOR 50V 0.01U	8	
C9		ECEA1AU221	E.CAPACITOR 10V 220U	1	
D1-D9		MA165	DIODE	9	

Refer to the P.C.BOARDS LIST, page 6-1-1, before using this page.

Ref.No.		Part No.	Part Name & Description	Pcs	Remarks
D10-42		MA165	DIODE	33	
IC1		MC74HC138AF	IC	1	
IC2-C8		MC74HC374F	IC	7	
IC9		M54514AP	IC	1	
IC10-15		M54514AP	IC	6	
J2,J3		VJP1239T	CONNECTOR(MALE) 12P	2	
J4		VJP1237T	CONNECTOR(MALE) 10P	1	
LED1		LN217RP	LED	1	
LED2		EBG5504S	LED	1	
LED3		VLL0032	LED	1	
LED4-D9		LN317GPU	DIODE	6	
LED10-19		LN317GPU	DIODE	10	
LED20-23		PY3668S	LED	4	
LED24-28		EBG5504S	LED	5	
LED29-31		VLL0032	LED	3	
Q1,Q2		2SB643	TRANSISTOR	2	
Q3		DTC114EA	TRANSISTOR RESISTOR	1	
			RESISTORS		
R1		ERDS2TJ103	C.RESISTOR 1/4W 10K	1	
R2		ERDS2TJ102	C.RESISTOR 1/4W 1K	1	
R3		ERDS2TJ103	C.RESISTOR 1/4W 10K	1	
R4		ERDS2TJ102	C.RESISTOR 1/4W 1K	1	
R5		ERDS2TJ391	C.RESISTOR 1/4W 390	1	
R6-R8		ERDS2TJ151	C.RESISTOR 1/4W 150	3	
R9		ERDS2TJ391	C.RESISTOR 1/4W 390	1	
R10,11		ERDS2TJ151	C.RESISTOR 1/4W 150	2	
R12,13		ERDS2TJ391	C.RESISTOR 1/4W 390	2	
R14-16		ERDS2TJ151	C.RESISTOR 1/4W 150	3	
R17-21		ERDS2TJ391	C.RESISTOR 1/4W 390	5	
RA1,A2		EXBC44151J	COMBI.R-R 150	2	
RA3,A4		EXBC44391J	COMBI.R-R 390	2	
RA5,A6		EXBC44151J	COMBI.R-R 150	2	
RA8,A9		EXBC44391J	COMBI.R-R 390	2	
SW1		VSP0199	SWITCH	1	
SW2,W3		EVQQJ104K	SWITCH	2	
SW4		VSP0198	SWITCH	1	
SW5		VSP0193	SWITCH	1	
SW6		VSP0194	SWITCH	1	
SW7		VSP0195	SWITCH	1	
SW8		VSP0224	SWITCH	1	
SW9		VSP0279	SWITCH	1	
SW10		VSP0223	SWITCH	1	
SW11		VSP0199	SWITCH	1	
SW12,13		VSP0473	SWITCH	2	
SW14,15		VSP0198	SWITCH	2	
SW16		VSP0473	SWITCH	1	
SW17-19		VSP0199	SWITCH	3	
SW20-23		EVQQJ104K	SWITCH	4	
SW24,25		VSP0363		2	
SW26,27		EVQQJ104K	SWITCH	2	
SW28		VSP0199	SWITCH	1	
SW29		VSP0198	SWITCH	1	
SW30		VSP0204	SWITCH	1	
SW31,32		VSP0198	SWITCH	2	

Ref.No.		Part No.	Part Name & Description	Pcs	Remarks
SW33		VSP0239	SWITCH	1	
SW34		VSP0225	SWITCH	1	
SW35-37		EVQQ8B11K	SWITCH	3	
SW38-40		EVQQ8R13K	SWITCH	3	
SW41-44		VSS0172	SWITCH	4	
			MISCELLANEOUS		
		VMX0473	SPACER	10	
		VMZ0829	BARRIER	1	
	■	VEP86050D	P.C.BOARD W/COMPONENT		FOR AU-65-E,B
			FRONT PANEL A		
			CAPACITORS		
C1-C8		ECKF1H103ZF	C.CAPACITOR 50V 0.01U	8	
C9		ECEA1AU221	E.CAPACITOR 10V 220U	1	
D1-D9		MA165	DIODE	9	
D10-42		MA165	DIODE	33	
IC1		MC74HC138AF	IC	1	
IC2-C8		MC74HC374F	IC	7	
IC9		M54514AP	IC	1	
IC10-15		M54514AP	IC	6	
J2,J3		VJP1239T	CONNECTOR(MALE) 12P	2	
J4		VJP1237T	CONNECTOR(MALE) 10P	1	
LED1		LN217RP	LED	1	
LED2		EBG5504S	LED	1	
LED3		VLL0032	LED	1	
LED4-D9		LN317GPU	DIODE	6	
LED10-19		LN317GPU	DIODE	10	
LED20-23		PY3668S	LED	4	
LED24-28		EBG5504S	LED	5	
LED29-31		VLL0032	LED	3	
Q1,Q2		2SB643	TRANSISTOR	2	
Q3		DTC114EA	TRANSISTOR RESISTOR	1	
			RESISTORS		
R1		ERDS2TJ103	C.RESISTOR 1/4W 10K	1	
R2		ERDS2TJ102	C.RESISTOR 1/4W 1K	1	
R3		ERDS2TJ103	C.RESISTOR 1/4W 10K	1	
R4		ERDS2TJ102	C.RESISTOR 1/4W 1K	1	
R5		ERDS2TJ391	C.RESISTOR 1/4W 390	1	
R6-R8		ERDS2TJ151	C.RESISTOR 1/4W 150	3	
R9		ERDS2TJ391	C.RESISTOR 1/4W 390	1	
R10,11		ERDS2TJ151	C.RESISTOR 1/4W 150	2	
R12,13		ERDS2TJ391	C.RESISTOR 1/4W 390	2	
R14-16		ERDS2TJ151	C.RESISTOR 1/4W 150	3	

Refer to the P.C.BOARDS LIST, page 6-1-1, before using this page.

Ref.No.		Part No.	Part Name & Description	Pcs	Remarks
R17-21		ERDS2TJ391	C.RESISTOR 1/4W 390	5	
RA1,A2		EXBC44151J	COMBI.R-R 150	2	
RA3,A4		EXBC44391J	COMBI.R-R 390	2	
RA5,A6		EXBC44151J	COMBI.R-R 150	2	
RA8,A9		EXBC44391J	COMBI.R-R 390	2	
SW1		VSP0199	SWITCH	1	
SW2,W3		EVQQJ104K	SWITCH	2	
SW4		VSP0198	SWITCH	1	
SW5		VSP0193	SWITCH	1	
SW6		VSP0194	SWITCH	1	
SW7		VSP0195	SWITCH	1	
SW8		VSP0224	SWITCH	1	
SW9		VSP0279	SWITCH	1	
SW10		VSP0223	SWITCH	1	
SW11		VSP0199	SWITCH	1	
SW12,13		VSP0473	SWITCH	2	
SW14,15		VSP0198	SWITCH	2	
SW16		VSP0473	SWITCH	1	
SW17-19		VSP0199	SWITCH	3	
SW20-23		EVQQJ104K	SWITCH	4	
SW24,25		VSP0363	SWITCH	2	
SW26,27		EVQQJ104K	SWITCH	2	
SW28		VSP0199	SWITCH	1	
SW29		VSP0198	SWITCH	1	
SW30		VSP0204	SWITCH	1	
SW31,32		VSP0198	SWITCH	2	
SW33		VSP0239	SWITCH	1	
SW34		VSP0225	SWITCH	1	
SW35-37		EVQQ8B11K	SWITCH	3	
SW38-40		EVQQ8R13K	SWITCH	3	
SW41,42		VSS0172	SWITCH	2	
SW44		VSS0172	SWITCH	1	
			MISCELLANEOUS		
		VGF0191	SEARCH LED GUIDE	1	
		VGQ0457	LED SPACER	4	
		VHN0060	NYLON NUT	4	
		VMX0473	LED HOLDER	10	
		VMZ0829	BARRIER	1	
	■	VEP86086A	P.C.BOARD W/COMPONENT		FOR AU-63-P,E,B
			FRONT PANEL A		AU-62-P,E,B
			CAPACITORS		
C1-C9		ECKF1H103ZF	C.CAPACITOR 50V 0.01U	9	
C10		ECKF1H103ZF	C.CAPACITOR 50V 0.01U	1	
C11		ECEA1AU221	E.CAPACITOR 10V 220U	1	
D5-D7		MA165	DIODE	3	
D9		MA165	DIODE	1	
D22		MA165	DIODE	1	
D24		MA165	DIODE	1	
D26-33		MA165	DIODE	8	

Ref.No.		Part No.	Part Name & Description	Pcs	Remarks
IC1		MC74HC138N	IC	1	
IC2-C7		MC74HC374N	IC	6	
IC8		MC74HC154N	IC	1	
IC9		MC74HC541N	IC	1	
IC10		MC74HC541N	IC	1	
IC11-13		AN6873N	IC	3	
IC14-16		M54514AP	IC	3	
J2		VJP1233T	CONNECTOR(MALE) 6P	1	
J3		VJP1235T	CONNECTOR(MALE) 8P	1	
J4,J5		VJP1239T	CONNECTOR(MALE) 12P	2	
LED1-D9		LN340GCPG	LED	9	
LED10-14		LN340GCPG	LED	5	
LED15,16		AYBG5305S	LED	2	
LED17		LN217RP	LED	1	
LED18		EBG5504S	LED	1	
LED19-34		LN317GPU	DIODE	16	
Q1-Q7		2SD636	TRANSISTOR	7	
Q8		2SB641	TRANSISTOR	1	
Q9		*DTC114EA*	*TRANSISTOR RESISTOR*	1	
Q10,11		2SB643	TRANSISTOR	2	
Q12		2SB641	TRANSISTOR	1	
			RESISTORS		
R1-R9		ERDS2TJ151	C.RESISTOR 1/4W 150	9	
R10		ERDS2TJ151	C.RESISTOR 1/4W 150	1	
R11,12		ERDS2TJ221	C.RESISTOR 1/4W 220	2	
R13-16		ERDS2TJ151	C.RESISTOR 1/4W 150	4	
R17		ERDS2TJ682	C.RESISTOR 1/4W 6.8K	1	
R18		ERDS2TJ222	C.RESISTOR 1/4W 2.2K	1	
R19		ERDS2TJ682	C.RESISTOR 1/4W 6.8K	1	
R20		ERDS2TJ222	C.RESISTOR 1/4W 2.2K	1	
R21		ERDS2TJ682	C.RESISTOR 1/4W 6.8K	1	
R22,23		ERDS2TJ222	C.RESISTOR 1/4W 2.2K	2	
R24		ERDS2TJ682	C.RESISTOR 1/4W 6.8K	1	
R25		ERDS2TJ222	C.RESISTOR 1/4W 2.2K	1	
R26,27		ERDS2TJ682	C.RESISTOR 1/4W 6.8K	2	
R28,29		ERDS2TJ222	C.RESISTOR 1/4W 2.2K	2	
R30		ERDS2TJ682	C.RESISTOR 1/4W 6.8K	1	
R31		ERDS2TJ222	C.RESISTOR 1/4W 2.2K	1	
R32		ERDS2TJ682	C.RESISTOR 1/4W 6.8K	1	
R34		ERDS2TJ391	C.RESISTOR 1/4W 390	1	
R36		ERDS2TJ391	C.RESISTOR 1/4W 390	1	
R39		ERDS2TJ102	C.RESISTOR 1/4W 1K	1	
R40		ERDS2TJ103	C.RESISTOR 1/4W 10K	1	
R41		ERDS2TJ102	C.RESISTOR 1/4W 1K	1	
R42		ERDS2TJ103	C.RESISTOR 1/4W 10K	1	
R43		ERDS2TJ682	C.RESISTOR 1/4W 6.8K	1	
R44		ERDS2TJ222	C.RESISTOR 1/4W 2.2K	1	
R45,46		ERDS2TJ151	C.RESISTOR 1/4W 150	2	
RA4,A5		EXBC44151J	COMBI.R-R 150	2	
RA6,A7		EXBC44391J	COMBI.R-R 390	2	
SW5		VSP0193	SWITCH	1	
SW6		VSP0195	SWITCH	1	
SW7		VSP0224	SWITCH	1	
SW9		VSP0223	SWITCH	1	
SW22		VSP0199	SWITCH	1	
SW24		VSP0198	SWITCH	1	

Refer to the P.C.BOARDS LIST, page 6-1-1, before using this page.

Ref.No.		Part No.	Part Name & Description	Pcs	Remarks
SW26		VSP0239	SWITCH	1	
SW27		VSP0225	SWITCH	1	
SW28,29		VSS0172	SWITCH	2	
SW30-32		EVQQ8R13K	SWITCH	3	
			MISCELLANEOUS		
		VGF0191	SEARCH LED GUIDE	1	
		VGF0240	LED HOLDER	7	
		VHN0060	NYLON NUT	6	
		VJF0344	HOLDER	1	
		VJF0345	HOLDER	1	
		VMX0473	LED HOLDER	1	
		VMX1606	SPACER	1	
		VMZ0829	BARRIER	1	
	■	VEP66022A	P.C.BOARD W/COMPONENT		FOR AU-65-P,E,B
			FRONT B		
			CAPACITORS		
C1,C2		VCKD1H104ZD	C.CAPACITOR 50V 0.1U	2	
C5-C9		VCKD1H104ZD	C.CAPACITOR 50V 0.1U	5	
C10-17		VCKD1H104ZD	C.CAPACITOR 50V 0.1U	8	
C18		ECEA1AU221	E.CAPACITOR 10V 220U	1	
IC1,C2		MC74HC154N	IC	2	
IC3,C4		TC74HC540AF	IC	2	
IC5		MC74HC540N	IC	1	
IC6		TC74HC540AF	IC	1	
IC7-C9		MN74HC164S	IC	3	
IC10-16		MN74HC164S	IC	7	
IC17		MN74HC74S	IC	1	
IC18-30		TD62781AP	IC	13	
J5,J6		VJP1239T	CONNECTOR(MALE) 12P	2	
			MISCELLANEOUS		
		VMX1658	SPACER	4	
	■	VEP86076C	P.C.BOARD W/COMPONENT		FOR AU-63-P
			FRONT B		AU-62-P
BZ1		VSQ0558	BUZZER	1	
			CAPACITORS		
C1,C2		ECCF1H330JC	C.CAPACITOR 50V 33P	2	

Ref.No.		Part No.	Part Name & Description	Pcs	Remarks
C3-C5		ECKF1H103ZF	C.CAPACITOR 50V 0.01U	3	
C6		ECQV1H104JZ	P.CAPACITOR 50V 0.1U	1	
C7		ECEA1HKA010	E.CAPACITOR 50V 1U	1	
C8,C9		ECKF1H103ZF	C.CAPACITOR 50V 0.01U	2	
C10-13		ECKF1H103ZF	C.CAPACITOR 50V 0.01U	4	
C15-17		ECKF1H103ZF	C.CAPACITOR 50V 0.01U	3	
C18		ECQM1H103JV	P.CAPACITOR 50V 0.01U	1	
C19		ECEA1AKS101	E.CAPACITOR 10V 100U	1	
C20		ECKF1H103ZF	C.CAPACITOR 50V 0.01U	1	
C21		ECEA1AKS101	E.CAPACITOR 10V 100U	1	
C22-25		ECKF1H103ZF	C.CAPACITOR 50V 0.01U	4	
C26		ECEA1AKS101	E.CAPACITOR 10V 100U	1	
C27		ECEA1AKA221	E.CAPACITOR 10V 220U	1	
C28		ECQM1H102JV	P.CAPACITOR 50V 1000P	1	
C29		ECEA1HU470	E.CAPACITOR 50V 47U	1	
C30,31		ECKF1H103ZF	C.CAPACITOR 50V 0.01U	2	
C32		ECQM1H103JV	P.CAPACITOR 50V 0.01U	1	
C33		ECQM1H332JV	P.CAPACITOR 50V 3300P	1	
C34		ECQM1H103JV	P.CAPACITOR 50V 0.01U	1	
C35		ECQV1H104JZ	P.CAPACITOR 50V 0.1U	1	
C36		ECKF1H103ZF	C.CAPACITOR 50V 0.01U	1	
C37,38		ECQV1H104JZ	P.CAPACITOR 50V 0.1U	2	
C48-56		ECKF1H103ZF	C.CAPACITOR 50V 0.01U	9	
D1		MA185	DIODE	1	
D2		MA1220-M	DIODE	1	
D3		MA4075	DIODE	1	
D4-D9		MA165	DIODE	6	
D10-15		MA165	DIODE	6	
D16		1SS101	DIODE	1	
D17		MA165	DIODE	1	
D18		1SS101	DIODE	1	
IC1		MC74HC74AF	IC	1	
IC2		MC74HC161F	IC	1	
IC3		TL7705CPB	IC	1	
IC4		TMPZ84C00AP6	IC	1	
IC5,C6		MC74HC541N	IC	2	
IC7		VSI0686	IC	1	
IC8		HM6264ALP12	IC	1	
IC9		MC74HC139AF	IC	1	
IC10		MC74HC138AF	IC	1	
IC11		TMPZ84C40AP6	IC	1	
IC12		TMPZ84C30AP6	IC	1	
IC13		TMP82C79F2	IC	1	
IC14		MC74HC138AF	IC	1	
IC15		TMP82C55AP2	IC	1	
IC16		MC14015BF	IC	1	
IC17		MC14013BF	IC	1	
IC18,19		MC14516BF	IC	2	
IC20		MC14049UBF	IC	1	
IC21		MC14073BF	IC	1	
IC22		SN74LS38NS	IC	1	
IC23		MC74HC132F	IC	1	
IC24		MC74HCU04F	IC	1	
IC25		MC74HC04AF	IC	1	
IC26		MC74HC32N	IC	1	
IC27		MC14001BCP	IC	1	
IC28		MC74HC00AN	IC	1	
IC4S		VJS1428	CONNECTOR(FEMALE)	1	
IC7S		VJS1427	CONNECTOR(FEMALE)	1	
J1		VJP1145	CONNECTOR (MALE)	1	
J2		VJP1246T	CONNECTOR(MALE) 6P	1	
J3		VJP1248T	CONNECTOR(MALE) 8P	1	
J4,J5		VJP1252T	CONNECTOR(MALE) 12P	2	

Refer to the P.C.BOARDS LIST, page 6-1-1, before using this page.

Ref.No.		Part No.	Part Name & Description	Pcs	Remarks
L1,L2		VLP0017	COIL	2	
L3		VTD0035	COIL	1	
P150		VJP1976	CONNECTOR(MALE)	1	
Q1		2SD946A	TRANSISTOR	1	
Q2,Q3		2SB641	TRANSISTOR	2	
Q4		2SD1051	TRANSISTOR	1	
Q5-Q7		UN1214	TRANSISTOR-RESISTOR	3	
Q8		UN1212	TRANSISTOR-RESISTOR	1	
Q9		UN1214	TRANSISTOR-RESISTOR	1	
Q10		2SD636	TRANSISTOR	1	
			RESISTORS		
R1		ERDS2TJ105	C.RESISTOR 1/4W 1000K	1	
R2		ERDS2TJ103	C.RESISTOR 1/4W 10K	1	
R3		ERDS2TJ222	C.RESISTOR 1/4W 2.2K	1	
R4		ERDS2TJ472	C.RESISTOR 1/4W 4.7K	1	
R5		ERDS2TJ223	C.RESISTOR 1/4W 22K	1	
R6		ERDS2TJ562	C.RESISTOR 1/4W 5.6K	1	
R7		ERDS2TJ102	C.RESISTOR 1/4W 1K	1	
R8		ERDS2TJ103	C.RESISTOR 1/4W 10K	1	
R9		ERDS2TJ153	C.RESISTOR 1/4W 15K	1	
R10		ERDS2TJ103	C.RESISTOR 1/4W 10K	1	
R11		ERDS2TJ472	C.RESISTOR 1/4W 4.7K	1	
R12		ERDS2TJ103	C.RESISTOR 1/4W 10K	1	
R13		ERDS2TJ153	C.RESISTOR 1/4W 15K	1	
R14		ERDS2TJ222	C.RESISTOR 1/4W 2.2K	1	
R15		ERDS2TJ330	C.RESISTOR 1/4W 33	1	
R16		ERDS2TJ223	C.RESISTOR 1/4W 22K	1	
R17		ERDS2TJ472	C.RESISTOR 1/4W 4.7K	1	
R18		ERDS2TJ104	C.RESISTOR 1/4W 100K	1	
R19-21		ERDS2TJ103	C.RESISTOR 1/4W 10K	3	
R22		ERDS2TJ473	C.RESISTOR 1/4W 47K	1	
R23		ERDS2TJ562	C.RESISTOR 1/4W 5.6K	1	
R24		ERDS2TJ103	C.RESISTOR 1/4W 10K	1	
R25		ERDS2TJ105	C.RESISTOR 1/4W 1000K	1	
R26		ERDS2TJ472	C.RESISTOR 1/4W 4.7K	1	
R27		ERDS2TJ333	C.RESISTOR 1/4W 33K	1	
R28		ERDS2TJ223	C.RESISTOR 1/4W 22K	1	
R29		ERDS2TJ222	C.RESISTOR 1/4W 2.2K	1	
R30,31		ERDS2TJ102	C.RESISTOR 1/4W 1K	2	
RA1,A2		EXBR88223J	COMBI.R-R 22K	2	
SW1		VSR0045	SWITCH	1	
SW2		VSS023708	SWITCH	1	
TP3-P8		VJR0400Y	TEST POINT	6	
TPG1,G2		VJR0400B	TEST POINT	2	
VR1		VRV0109B103	V.RESISTOR 10K	1	
VR2		VRV0109B503	V.RESISTOR 50K	1	
X1		VSX0150	CRYSTAL OSCILLATOR	1	

Ref.No.		Part No.	Part Name & Description	Pcs	Remarks
	■	VEP86076D	P.C.BOARD W/COMPONENT		FOR AU-63-E,B
			FRONT PANEL B		AU-62-E,B
BZ1		VSQ0558	BUZZER	1	
			CAPACITORS		
C1,C2		ECCF1H330JC	C.CAPACITOR 50V 33P	2	
C3-C5		ECKF1H103ZF	C.CAPACITOR 50V 0.01U	3	
C6		ECQV1H104JZ	P.CAPACITOR 50V 0.1U	1	
C7		ECEA1HKA010	E.CAPACITOR 50V 1U	1	
C8,C9		ECKF1H103ZF	C.CAPACITOR 50V 0.01U	2	
C10-13		ECKF1H103ZF	C.CAPACITOR 50V 0.01U	4	
C15-17		ECKF1H103ZF	C.CAPACITOR 50V 0.01U	3	
C18		ECQM1H103JV	P.CAPACITOR 50V 0.01U	1	
C19		ECEA1AKS101	E.CAPACITOR 10V 100U	1	
C20		ECKF1H103ZF	C.CAPACITOR 50V 0.01U	1	
C21		ECEA1AKS101	E.CAPACITOR 10V 100U	1	
C22-25		ECKF1H103ZF	C.CAPACITOR 50V 0.01U	4	
C26		ECEA1AKS101	E.CAPACITOR 10V 100U	1	
C27		ECEA1AKA221	E.CAPACITOR 10V 220U	1	
C28		ECQM1H102JV	P.CAPACITOR 50V 1000P	1	
C29		ECEA1HU470	E.CAPACITOR 50V 47U	1	
C30,31		ECKF1H103ZF	C.CAPACITOR 50V 0.01U	2	
C32		ECQM1H103JV	P.CAPACITOR 50V 0.01U	1	
C33		ECQM1H332JV	P.CAPACITOR 50V 3300P	1	
C34		ECQM1H103JV	P.CAPACITOR 50V 0.01U	1	
C35		ECQV1H104JZ	P.CAPACITOR 50V 0.1U	1	
C36		ECKF1H103ZF	C.CAPACITOR 50V 0.01U	1	
C37,38		ECQV1H104JZ	P.CAPACITOR 50V 0.1U	2	
C48-56		ECKF1H103ZF	C.CAPACITOR 50V 0.01U	9	
D1		MA185	DIODE	1	
D2		MA1220-M	DIODE	1	
D3		MA4075	DIODE	1	
D4-D9		MA165	DIODE	6	
D10-15		MA165	DIODE	6	
D16		1SS101	DIODE	1	
D17		MA165	DIODE	1	
D18		1SS101	DIODE	1	
IC1		MC74HC74AF	IC	1	
IC2		MC74HC161F	IC	1	
IC3		TL7705CPB	IC	1	
IC4		TMPZ84C00AP6	IC	1	
IC5,C6		MC74HC541N	IC	2	
IC7		VSI0742	IC	1	
IC8		HM6264ALP12	IC	1	
IC9		MC74HC139AF	IC	1	
IC10		MC74HC138AF	IC	1	
IC11		TMPZ84C40AP6	IC	1	
IC12		TMPZ84C30AP6	IC	1	
IC13		TMP82C79F2	IC	1	
IC14		MC74HC138AF	IC	1	
IC15		TMP82C55AP2	IC	1	
IC16		MC14015BF	IC	1	
IC17		MC14013BF	IC	1	
IC18,19		MC14516BF	IC	2	
IC20		MC14049UBF	IC	1	
IC21		MC14073BF	IC	1	
IC22		SN74LS38NS	IC	1	
IC23		MC74HC132F	IC	1	
IC24		MC74HCU04F	IC	1	

Refer to the P.C.BOARDS LIST, page 6-1-1, before using this page.

Ref.No.		Part No.	Part Name & Description	Pcs	Remarks
IC25		MC74HC04AF	IC	1	
IC26		MC74HC32N	IC	1	
IC27		MC14001BCP	IC	1	
IC28		MC74HC00AN	IC	1	
IC4S		VJS2336A040	CONNECTOR (FEMALE)	1	
IC7S		VJS2336A028	CONNECTOR (FEMALE)	1	
J1		VJP1145	CONNECTOR(MALE)	1	
J2		VJP1246T	CONNECTOR(MALE) 6P	1	
J3		VJP1248T	CONNECTOR(MALE) 8P	1	
J4,J5		VJP1252T	CONNECTOR(MALE) 12P	2	
L1,L2		VLP0017	COIL	2	
L3		VTD0035	COIL	1	
P150		VJP1976	CONNECTOR(MALE)	1	
Q1		2SD946A	TRANSISTOR	1	
Q2,Q3		2SB641	TRANSISTOR	2	
Q4		2SD1051	TRANSISTOR	1	
Q5-Q7		UN1214	TRANSISTOR-RESISTOR	3	
Q8		UN1212	TRANSISTOR-RESISTOR	1	
Q9		UN1214	TRANSISTOR-RESISTOR	1	
Q10		2SD636	TRANSISTOR	1	
			RESISTORS		
R1		ERDS2TJ105	C.RESISTOR 1/4W 1000K	1	
R2		ERDS2TJ103	C.RESISTOR 1/4W 10K	1	
R3		ERDS2TJ222	C.RESISTOR 1/4W 2.2K	1	
R4		ERDS2TJ472	C.RESISTOR 1/4W 4.7K	1	
R5		ERDS2TJ223	C.RESISTOR 1/4W 22K	1	
R6		ERDS2TJ562	C.RESISTOR 1/4W 5.6K	1	
R7		ERDS2TJ102	C.RESISTOR 1/4W 1K	1	
R8		ERDS2TJ103	C.RESISTOR 1/4W 10K	1	
R9		ERDS2TJ153	C.RESISTOR 1/4W 15K	1	
R10		ERDS2TJ103	C.RESISTOR 1/4W 10K	1	
R11		ERDS2TJ472	C.RESISTOR 1/4W 4.7K	1	
R12		ERDS2TJ103	C.RESISTOR 1/4W 10K	1	
R13		ERDS2TJ153	C.RESISTOR 1/4W 15K	1	
R14		ERDS2TJ222	C.RESISTOR 1/4W 2.2K	1	
R15		ERDS2TJ330	C.RESISTOR 1/4W 33	1	
R16		ERDS2TJ223	C.RESISTOR 1/4W 22K	1	
R17		ERDS2TJ472	C.RESISTOR 1/4W 4.7K	1	
R18		ERDS2TJ104	C.RESISTOR 1/4W 100K	1	
R19-21		ERDS2TJ103	C.RESISTOR 1/4W 10K	3	
R22		ERDS2TJ473	C.RESISTOR 1/4W 47K	1	
R23		ERDS2TJ562	C.RESISTOR 1/4W 5.6K	1	
R24		ERDS2TJ103	C.RESISTOR 1/4W 10K	1	
R25		ERDS2TJ105	C.RESISTOR 1/4W 1000K	1	
R26		ERDS2TJ472	C.RESISTOR 1/4W 4.7K	1	
R27		ERDS2TJ333	C.RESISTOR 1/4W 33K	1	
R28		ERDS2TJ223	C.RESISTOR 1/4W 22K	1	
R29		ERDS2TJ222	C.RESISTOR 1/4W 2.2K	1	
R30,31		ERDS2TJ102	C.RESISTOR 1/4W 1K	2	
RA1,A2		EXBR88223J	COMBI.R-R 22K	2	
SW1		VSR0045	SWITCH	1	
SW2		VSS023708	SWITCH	1	

Ref.No.		Part No.	Part Name & Description	Pcs	Remarks
TP3-P8		VJR0400Y	TEST POINT	6	
TPG1,G2		VJR0400B	TEST POINT	2	
VR1		VRV0109B103	V.RESISTOR 10K	1	
VR2		VRV0109B503	V.RESISTOR 50K	1	
X1		VSX0150	CRYSTAL OSCILLATOR	1	
	■	VEP86048F	P.C.BOARD W/COMPONENT		FOR AU-65-P
			FRONT PANEL C		
BZ1		VSQ0558	BUZZER	1	
			CAPACITORS		
C1,C2		ECCF1H330JC	C.CAPACITOR 50V 33P	2	
C3-C5		ECKF1H103ZF	C.CAPACITOR 50V 0.01U	3	
C6		ECQV1H104JZ	P.CAPACITOR 50V 0.1U	1	
C7		ECEA1HU010	E.CAPACITOR 50V 1U	1	
C8,C9		ECKF1H103ZF	C.CAPACITOR 50V 0.01U	2	
C10-12		ECKF1H103ZF	C.CAPACITOR 50V 0.01U	3	
C14-17		ECKF1H103ZF	C.CAPACITOR 50V 0.01U	4	
C18		ECEA1AU101	E.CAPACITOR 10V 100U	1	
C19		ECKF1H103ZF	C.CAPACITOR 50V 0.01U	1	
C20		ECEA1AU101	E.CAPACITOR 10V 100U	1	
C21-25		ECKF1H103ZF	C.CAPACITOR 50V 0.01U	5	
C26		ECQV1H104JZ	P.CAPACITOR 50V 0.1U	1	
C27-29		ECKF1H103ZF	C.CAPACITOR 50V 0.01U	3	
C30		ECCF1H101JC	C.CAPACITOR 50V 100P	1	
C31,32		ECKF1H103ZF	C.CAPACITOR 50V 0.01U	2	
C33		ECKF1H561KB	C.CAPACITOR 50V 560P	1	
C34		ECKF1H103ZF	C.CAPACITOR 50V 0.01U	1	
C35		ECEA1AU101	E.CAPACITOR 10V 100U	1	
C36,37		ECEA1AU102	E.CAPACITOR 10V 1000U	2	
C38		ECEA1HUR47	E.CAPACITOR 50V 0.47U	1	
C39		ECEA2AU101	E.CAPACITOR 100V 100U	1	
C40		ECQM1H103JV	P.CAPACITOR 50V 0.01U	1	
C41		ECQV1H104JZ	P.CAPACITOR 50V 0.1U	1	
C42		ECEA1CU100	E.CAPACITOR 16V 10U	1	
C43,44		ECKF1H103ZF	C.CAPACITOR 50V 0.01U	2	
C45		ECQM1H332JV	P.CAPACITOR 50V 3300P	1	
C46-57		ECKF1H103ZF	C.CAPACITOR 50V 0.01U	12	
C58		ECKF1H102KB	C.CAPACITOR 50V 1000P	1	
C59		ECKF1H103ZF	C.CAPACITOR 50V 0.01U	1	
C60		ECQV1H104JZ	P.CAPACITOR 50V 0.1U	1	
C61		ECQM1H103JV	P.CAPACITOR 50V 0.01U	1	
C62		ECQM1H682JV	P.CAPACITOR 50V 6800P	1	
C63		ECKF1H103ZF	C.CAPACITOR 50V 0.01U	1	
CT1		VSQ0535	REMOTO CONTROL UNIT	1	
D1		1SS101	DIODE	1	
D2-D4		MA165	DIODE	3	
D5		MA4082M	DIODE	1	
D6-D9		MA165	DIODE	4	

Refer to the P.C.BOARDS LIST, page 6-1-1, before using this page.

Ref.No.		Part No.	Part Name & Description	Pcs	Remarks
D10		1SS101	DIODE	1	
IC1		MC74HC74AF	IC	1	
IC2		MC74HC161F	IC	1	
IC3		TL7705CPB	IC	1	
IC4		TMPZ84C00AP6	IC	1	
IC5,C6		MC74HC541F	IC	2	
IC7		VSI0635A	IC	1	
IC8		HM6264ALP12	IC	1	
IC9		MC74HC139AF	IC	1	
IC10		MC74HC138AF	IC	1	
IC11		TMPZ84C40AP6	IC	1	
IC12		TMPZ84C30AF6	IC	1	
IC13		MC14015BF	IC	1	
IC14		MC14073BF	IC	1	
IC15		MC14049UBF	IC	1	
IC16		MC14013BF	IC	1	
IC17,18		MC14516BF	IC	2	
IC19		TMP82C55AF2	IC	1	
IC20		MC74HC273F	IC	1	
IC21		VSI0239	IC	1	
IC22		HD74HC93P	IC	1	
IC23		MC74HC107F	IC	1	
IC24		HD74HC93P	IC	1	
IC25		MC74HC107F	IC	1	
IC26		MC14001BF	IC	1	
IC27		TMP82C79F2	IC	1	
IC28		MC74HC244AF	IC	1	
IC29		MC74HC138AF	IC	1	
IC30		MC74HC32AF	IC	1	
IC31		SN74LS38NS	IC	1	
IC32		MC74HCU04F	IC	1	
IC33-35		MC74HC00AF	IC	3	
IC36,37		MC74HC04AF	IC	2	
IC38		MC74HC132F	IC	1	
IC39		MC14538BF	IC	1	
IC4S		VJS2336A040	CONNECTOR (FEMALE)	1	
IC7S		VJS2336A028	CONNECTOR (FEMALE)	1	
IC21S		VJS2336A028	CONNECTOR (FEMALE)	1	
J1		VJP1145	CONNECTOR (MALE)	1	
J2,J3		VJP1252T	CONNECTOR(MALE) 12P	2	
J4		VJP1250T	CONNECTOR(MALE) 10P	1	
L1,L2		VLP0017	COIL	2	
P150		VJP1976	CONNECTOR(MALE)	1	
Q1-Q3		UN1214	TRANSISTOR-RESISTOR	3	
Q4		2SA777	TRANSISTOR	1	
Q5		2SD1011	TRANSISTOR	1	
Q6		UN1212	TRANSISTOR-RESISTOR	1	
Q7		2SD636	TRANSISTOR	1	
Q8,Q9		UN1214	TRANSISTOR-RESISTOR	2	
Q10		UN1214	TRANSISTOR-RESISTOR	1	
Q11		2SD946A	TRANSISTOR	1	
			RESISTORS		
R1		ERDS2TJ105	C.RESISTOR 1/4W 1000K	1	
R2		ERDS2TJ102	C.RESISTOR 1/4W 1K	1	
R3		ERDS2TJ103	C.RESISTOR 1/4W 10K	1	
R4		ERDS2TJ124	C.RESISTOR 1/4W 120K	1	
R5		ERDS2TJ562	C.RESISTOR 1/4W 5.6K	1	

Ref.No.		Part No.	Part Name & Description	Pcs	Remarks
R7,R8		ERDS2TJ103	C.RESISTOR 1/4W 10K	2	
R9		ERDS2TJ153	C.RESISTOR 1/4W 15K	1	
R10-12		ERDS2TJ223	C.RESISTOR 1/4W 22K	3	
R13		ERDS2TJ123	C.RESISTOR 1/4W 12K	1	
R14,15		ERDS2TJ333	C.RESISTOR 1/4W 33K	2	
R16-19		ERDS2TJ103	C.RESISTOR 1/4W 10K	4	
R20		ERDS2TJ473	C.RESISTOR 1/4W 47K	1	
R21		ERDS2TJ562	C.RESISTOR 1/4W 5.6K	1	
R22		ERDS2TJ105	C.RESISTOR 1/4W 1000K	1	
R23		ERDS2TJ472	C.RESISTOR 1/4W 4.7K	1	
R24		ERDS2TJ333	C.RESISTOR 1/4W 33K	1	
R25		ERDS2TJ223	C.RESISTOR 1/4W 22K	1	
R26		ERDS2TJ222	C.RESISTOR 1/4W 2.2K	1	
R27		ERDS2TJ102	C.RESISTOR 1/4W 1K	1	
R28		ERDS2TJ333	C.RESISTOR 1/4W 33K	1	
R29,30		ERDS2TJ104	C.RESISTOR 1/4W 100K	2	
R31		ERDS2TJ222	C.RESISTOR 1/4W 2.2K	1	
R32		ERDS2TJ223	C.RESISTOR 1/4W 22K	1	
R33		ERDS2TJ472	C.RESISTOR 1/4W 4.7K	1	
R34-36		ERDS2TJ223	C.RESISTOR 1/4W 22K	3	
R36		ERDS2TJ224	C.RESISTOR 1/4W 220K	1	
R37		ERDS2TJ472	C.RESISTOR 1/4W 4.7K	1	
R38		ERDS2TJ223	C.RESISTOR 1/4W 22K	1	
R39		ERDS2TJ102	C.RESISTOR 1/4W 1K	1	
RA1		EXBR88223J	COMBI.R-R 22K	1	
RA2		EXBR85103J	COMBI.R-R 10K	1	
RA3		EXBR88223J	COMBI.R-R 22K	1	
RA4,A5		EXBC44103J	COMBI.R-R 10K	2	
RA6		EXBR88223J	COMBI.R-R 22K	1	
SW1		VSR0045	SWITCH	1	
SW2		VSS023702	SWITCH	1	
SW4		VSS023708	SWITCH	1	
TP1		VJR0400B	TEST POINT	1	
TP6,P7		VJR0400Y	TEST POINT	2	
TP12-15		VJR0400Y	TEST POINT	4	
VR1		VRV0109B103	V.RESISTOR 10K	1	
VR2		VRV0109B503	V.RESISTOR 50K	1	
X1		VSX0150	CRYSTAL OSCILLATOR	1	
	■	VEP86048G	P.C.BOARD W/COMPONENT		FOR AU-65-E,B
			FRONT PANEL C		
BZ1		VSQ0558	BUZZER	1	
			CAPACITORS		
C1,C2		ECCF1H330JC	C.CAPACITOR 50V 33P	2	
C3-C5		ECKF1H103ZF	C.CAPACITOR 50V 0.01U	3	
C6		ECQV1H104JZ	P.CAPACITOR 50V 0.1U	1	

Refer to the P.C.BOARDS LIST, page 6-1-1, before using this page.

Ref.No.		Part No.	Part Name & Description	Pcs	Remarks
C7		ECEA1HU010	E.CAPACITOR 50V 1U	1	
C8,C9		ECKF1H103ZF	C.CAPACITOR 50V 0.01U	2	
C10-12		ECKF1H103ZF	C.CAPACITOR 50V 0.01U	3	
C14-17		ECKF1H103ZF	C.CAPACITOR 50V 0.01U	4	
C18		ECEA1AU101	E.CAPACITOR 10V 100U	1	
C19		ECKF1H103ZF	C.CAPACITOR 50V 0.01U	1	
C20		ECEA1AU101	E.CAPACITOR 10V 100U	1	
C21-25		ECKF1H103ZF	C.CAPACITOR 50V 0.01U	5	
C26		ECQV1H104JZ	P.CAPACITOR 50V 0.1U	1	
C27-29		ECKF1H103ZF	C.CAPACITOR 50V 0.01U	3	
C30		ECCF1H101JC	C.CAPACITOR 50V 100P	1	
C31,32		ECKF1H103ZF	C.CAPACITOR 50V 0.01U	2	
C33		ECKF1H561KB	C.CAPACITOR 50V 560P	1	
C34		ECKF1H103ZF	C.CAPACITOR 50V 0.01U	1	
C35		ECEA1AU101	E.CAPACITOR 10V 100U	1	
C36,37		ECEA1AU102	E.CAPACITOR 10V 1000U	2	
C38		ECEA1HUR47	E.CAPACITOR 50V 0.47U	1	
C39		ECEA2AU101	E.CAPACITOR 100V 100U	1	
C40		ECQM1H103JV	P.CAPACITOR 50V 0.01U	1	
C41		ECQV1H104JZ	P.CAPACITOR 50V 0.1U	1	
C42		ECEA1CU100	E.CAPACITOR 16V 10U	1	
C43,44		ECKF1H103ZF	C.CAPACITOR 50V 0.01U	2	
C45		ECQM1H332JV	P.CAPACITOR 50V 3300P	1	
C46-57		ECKF1H103ZF	C.CAPACITOR 50V 0.01U	12	
C58		ECKF1H102KB	C.CAPACITOR 50V 1000P	1	
C59		ECKF1H103ZF	C.CAPACITOR 50V 0.01U	1	
C60		ECQV1H104JZ	P.CAPACITOR 50V 0.1U	1	
C61		ECQM1H103JV	P.CAPACITOR 50V 0.01U	1	
C62		ECQM1H682JV	P.CAPACITOR 50V 6800P	1	
C63		ECKF1H103ZF	C.CAPACITOR 50V 0.01U	1	
CT1		VSQ0535	REMOTO CONTROL UNIT	1	
D1		1SS101	DIODE	1	
D2-D4		MA165	DIODE	3	
D5		MA4082M	DIODE	1	
D6-D9		MA165	DIODE	4	
D10		1SS101	DIODE	1	
IC1		MC74HC74AF	IC	1	
IC2		MC74HC161F	IC	1	
IC3		TL7705CPB	IC	1	
IC4		TMPZ84C00AP6	IC	1	
IC5,C6		MC74HC541F	IC	2	
IC7		VSI0741	IC	1	
IC8		HM6264ALP12	IC	1	
IC9		MC74HC139AF	IC	1	
IC10		MC74HC138AF	IC	1	
IC11		TMPZ84C40AP6	IC	1	
IC12		TMPZ84C30AF6	IC	1	
IC13		MC14015BF	IC	1	
IC14		MC14073BF	IC	1	
IC15		MC14049UBF	IC	1	
IC16		MC14013BF	IC	1	
IC17,18		MC14516BF	IC	2	
IC19		TMP82C55AF2	IC	1	
IC20		MC74HC273F	IC	1	
IC21		VSI0239	IC	1	
IC22		HD74HC93P	IC	1	
IC23		MC74HC107F	IC	1	
IC24		HD74HC93P	IC	1	
IC25		MC74HC107F	IC	1	
IC26		MC14001BF	IC	1	
IC27		TMP82C79F2	IC	1	
IC28		MC74HC244AF	IC	1	
IC29		MC74HC138AF	IC	1	
IC30		MC74HC32AF	IC	1	
IC31		SN74LS38NS	IC	1	
IC32		MC74HCU04F	IC	1	

Ref.No.		Part No.	Part Name & Description	Pcs	Remarks
IC33-35		MC74HC00AF	IC	3	
IC36,37		MC74HC04AF	IC	2	
IC38		MC74HC132F	IC	1	
IC39		MC14538BF	IC	1	
IC4S		VJS2336A040	CONNECTOR (FEMALE)	1	
IC7S		VJS2336A028	CONNECTOR (FEMALE)	1	
IC21S		VJS2336A028	CONNECTOR (FEMALE)	1	
J1		VJP1145	CONNECTOR(MALE)	1	
J2,J3		VJP1252T	CONNECTOR(MALE) 12P	2	
J4		VJP1250T	CONNECTOR(MALE) 10P	1	
L1,L2		VLP0017	COIL	2	
P150		VJP1976	CONNECTOR(MALE)	1	
Q1-Q3		UN1214	TRANSISTOR-RESISTOR	3	
Q4		2SA777	TRANSISTOR	1	
Q5		2SD1011	TRANSISTOR	1	
Q6		UN1212	TRANSISTOR-RESISTOR	1	
Q7		2SD636	TRANSISTOR	1	
Q8,Q9		UN1214	TRANSISTOR-RESISTOR	2	
Q10		UN1214	TRANSISTOR-RESISTOR	1	
Q11		2SD946A	TRANSISTOR	1	
			RESISTORS		
R1		ERDS2TJ105	C.RESISTOR 1/4W 1000K	1	
R2		ERDS2TJ102	C.RESISTOR 1/4W 1K	1	
R3		ERDS2TJ103	C.RESISTOR 1/4W 10K	1	
R4		ERDS2TJ124	C.RESISTOR 1/4W 120K	1	
R5		ERDS2TJ562	C.RESISTOR 1/4W 5.6K	1	
R7,R8		ERDS2TJ103	C.RESISTOR 1/4W 10K	2	
R9		ERDS2TJ153	C.RESISTOR 1/4W 15K	1	
R10-12		ERDS2TJ223	C.RESISTOR 1/4W 22K	3	
R13		ERDS2TJ123	C.RESISTOR 1/4W 12K	1	
R14,15		ERDS2TJ333	C.RESISTOR 1/4W 33K	2	
R16-19		ERDS2TJ103	C.RESISTOR 1/4W 10K	4	
R20		ERDS2TJ473	C.RESISTOR 1/4W 47K	1	
R21		ERDS2TJ562	C.RESISTOR 1/4W 5.6K	1	
R22		ERDS2TJ105	C.RESISTOR 1/4W 1000K	1	
R23		ERDS2TJ472	C.RESISTOR 1/4W 4.7K	1	
R24		ERDS2TJ333	C.RESISTOR 1/4W 33K	1	
R25		ERDS2TJ223	C.RESISTOR 1/4W 22K	1	
R26		ERDS2TJ222	C.RESISTOR 1/4W 2.2K	1	
R27		ERDS2TJ102	C.RESISTOR 1/4W 1K	1	
R28		ERDS2TJ333	C.RESISTOR 1/4W 33K	1	
R29,30		ERDS2TJ104	C.RESISTOR 1/4W 100K	2	
R31		ERDS2TJ222	C.RESISTOR 1/4W 2.2K	1	
R32		ERDS2TJ223	C.RESISTOR 1/4W 22K	1	
R33		ERDS2TJ472	C.RESISTOR 1/4W 4.7K	1	
R34-36		ERDS2TJ223	C.RESISTOR 1/4W 22K	3	
R36		ERDS2TJ224	C.RESISTOR 1/4W 220K	1	
R37		ERDS2TJ472	C.RESISTOR 1/4W 4.7K	1	
R38		ERDS2TJ223	C.RESISTOR 1/4W 22K	1	
R39		ERDS2TJ102	C.RESISTOR 1/4W 1K	1	
RA1		EXBR88223J	COMBI.R-R 22K	1	
RA2		EXBR85103J	COMBI.R-R 10K	1	
RA3		EXBR88223J	COMBI.R-R 22K	1	
RA4,A5		EXBC44103J	COMBI.R-R 10K	2	
RA6		EXBR88223J	COMBI.R-R 22K	1	

Refer to the P.C.BOARDS LIST, page 6-1-1, before using this page.

Ref.No.		Part No.	Part Name & Description	Pcs	Remarks
SW1		VSR0045	SWITCH	1	
SW2		VSS023702	SWITCH	1	
SW4		VSS023708	SWITCH	1	
TP1		VJR0400B	TEST POINT	1	
TP6,P7		VJR0400Y	TEST POINT	2	
TP12-15		VJR0400Y	TEST POINT	4	
VR1		VRV0109B103	V.RESISTOR 10K	1	
VR2		VRV0109B503	V.RESISTOR 50K	1	
X1		VSX0150	CRYSTAL OSCILLATOR	1	
	■	VEP80552A	P.C.BOARD W/COMPONENT		
			FRONT SW VR		
			CAPACITORS		
C1		ECEA1CU101	E.CAPACITOR 16V 100U	1	
C2		ECKF1H103ZF	C.CAPACITOR 50V 0.01U	1	
C3		ECEA1CU101	E.CAPACITOR 16V 100U	1	
C4		ECKF1H103ZF	C.CAPACITOR 50V 0.01U	1	
CN190		VJP1930T	CONNECTOR	1	
L1,L2		VLQEL05S221K	COIL 220UH	2	
			RESISTORS		
R1-R9		ERDS2TJ103	C.RESISTOR 1/4W 10K	9	
R10-18		ERDS2TJ103	C.RESISTOR 1/4W 10K	9	
SW10		VSR0031	VOLTAGE SELECT SWITCH	1	
SW11		ESD32184	SWITCH	1	
VR1,R2		EVUF3AS01B53	V.RESISTOR 5K	2	
VR3-R8		EVUF3AE20B53	V.RESISTOR 5K	6	
VR9		EVUF3AS01B53	V.RESISTOR 5K	1	
	■	VEP80108A	P.C.BOARD W/COMPONENT		
			HEADPHONE VR		

Ref.No.		Part No.	Part Name & Description	Pcs	Remarks
P109		VJP1143	CONNECTOR(MALE)	1	
	■	VEP80616A	P.C.BOARD W/COMPONENT		
			HEADPHONE VR		
			CAPACITORS		
C1,C2		ECUM1H102KBN	C.CAPACITOR CH 50V 1000P	2	
L1-L3		VLQ0163K121	COIL	3	
P109		VJP1143	CONNECTOR(MALE)	1	
			MISCELLANEOUS		
		VJJ0150	EARPHONE JACE	1	
	■	VEP00E04B	P.C.BOARD W/COMPONENT		
			LOADING PHOTO		
			MISCELLANEOUS		
		ON1110-R	PHOTO INTERRUPTER	1	
	■	VEP80550A	P.C.BOARD W/COMPONENT		
			MECHA INTERFACE CIRCUIT		
			CAPACITORS		
C1-C8		ECUM1H103ZFN	C.CAPACITOR CH 50V 0.01U	8	
C18-29		ECUM1H103ZFN	C.CAPACITOR CH 50V 0.01U	12	
C30		ECUM1H331JCN	C.CAPACITOR CH 50V 330P	1	
C31		ECUM1H103ZFN	C.CAPACITOR CH 50V 0.01U	1	
C32		ECEA0JKG101	E.CAPACITOR 6.3V 100U	1	
C33		ECUM1H103ZFN	C.CAPACITOR CH 50V 0.01U	1	
C34		ECQM1H222JF	P.CAPACITOR 50V 2200P	1	
C35		ECEA1HKG0R1	E.CAPACITOR 50V 0.1U	1	
C36,37		ECEA1CKG100	E.CAPACITOR 16V 10U	2	
C200		ECUM1H103ZFN	C.CAPACITOR CH 50V 0.01U	1	
C201,02		ECEA1CKG100	E.CAPACITOR 16V 10U	2	
CN110		VJP1243T	CONNECTOR(MALE) 3P	1	
CN111		VJP1243R	CONNECTOR(MALE) 3P	1	

Refer to the P.C.BOARDS LIST, page 6-1-1, before using this page.

Ref.No.		Part No.	Part Name & Description	Pcs	Remarks
CN112		VJP1243G	CONNECTOR(MALE) 3P	1	
CN113		VJP1251T	CONNECTOR(MALE) 11P	1	
CN114		VJP1244T	CONNECTOR(MALE) 4P	1	
CN117-19		VJP1251T	CONNECTOR(MALE) 11P	3	
CN120		VJP1244T	CONNECTOR(MALE) 4P	1	
CN121		VJP1248T	CONNECTOR(MALE) 8P	1	
D10		MA151WK	DIODE	1	
D11,12		MA151K	DIODE	2	
D200-03		MA153	DIODE	4	
IC1,C2		MC14021BF	IC	2	
IC3		LM2904M	IC	1	
IC4		MC14584BF	IC	1	
IC5		MC14050BF	IC	1	
IC6		LM2903M	IC	1	
IC7		MC14013BF	IC	1	
IC8		NJM2901M	IC	1	
L1		VLQEL05S102K	COIL 1000UH	1	
P405		VJP1149	CONNECTOR(MALE)	1	
P431,32		VJP1149	CONNECTOR(MALE)	2	
P61002,03		VJP1243T	CONNECTOR(MALE) 3P	2	
P61006,07		VJP1243T	CONNECTOR(MALE) 3P	2	
P61008		VJP1246T	CONNECTOR(MALE) 6P	1	
P61017		VJP1930T	CONNECTOR	1	
P61020		VJP1930T	CONNECTOR	1	
P61021		VJP1251T	CONNECTOR(MALE) 11P	1	
P61022		VJP1244T	CONNECTOR(MALE) 4P	1	
P61025		VJP1245T	CONNECTOR(MALE) 5P	1	
P61027		VJP1243T	CONNECTOR(MALE) 3P	1	
P61032		VJP1242T	CONNECTOR(MALE) 2P	1	
P61033		VJP1243T	CONNECTOR(MALE) 3P	1	
Q15		2SB710	TRANSISTOR	1	(Q,R)
Q16,17		2SD601	TRANSISTOR CHIP	2	(Q,R)
Q200		2SD602	TRANSISTOR	1	(Q,R)
			RESISTORS		
R3		ERJ6GEYJ103	M.RESISTOR CH 1/10W 10K	1	
R40,41		ERJ6GEYJ123	M.RESISTOR CH 1/10W 12K	2	
R42		ERJ6GEYJ274	M.RESISTOR CH 1/10W 270K	1	
R43		ERJ6GEYJ223	M.RESISTOR CH 1/10W 22K	1	
R44		ERJ6GEYJ104	M.RESISTOR CH 1/10W 100K	1	
R46,47		ERJ6GEYJ563	M.RESISTOR CH 1/10W 56K	2	
R48		ERJ6GEYJ474	M.RESISTOR CH 1/10W 470K	1	
R49		ERJ6GEYJ103	M.RESISTOR CH 1/10W 10K	1	
R50		ERJ6GEYJ274	M.RESISTOR CH 1/10W 270K	1	
R51		ERJ6GEYJ333	M.RESISTOR CH 1/10W 33K	1	
R52		ERJ6GEYJ123	M.RESISTOR CH 1/10W 12K	1	
R53		ERJ6GEYJ103	M.RESISTOR CH 1/10W 10K	1	
R54		ERJ6GEYJ123	M.RESISTOR CH 1/10W 12K	1	
R55		ERJ6GEYJ103	M.RESISTOR CH 1/10W 10K	1	
R56		ERJ6GEYJ123	M.RESISTOR CH 1/10W 12K	1	
R57		ERJ6GEYJ103	M.RESISTOR CH 1/10W 10K	1	
R58		ERJ6GEYJ123	M.RESISTOR CH 1/10W 12K	1	
R59,60		ERJ6GEYJ333	M.RESISTOR CH 1/10W 33K	2	
R61,62		ERJ6GEYJ103	M.RESISTOR CH 1/10W 10K	2	
R63		ERJ6GEYJ123	M.RESISTOR CH 1/10W 12K	1	
R64		ERJ6GEYJ103	M.RESISTOR CH 1/10W 10K	1	
R65		ERJ6GEYJ123	M.RESISTOR CH 1/10W 12K	1	
R66		ERJ6GEYJ103	M.RESISTOR CH 1/10W 10K	1	

Ref.No.		Part No.	Part Name & Description	Pcs	Remarks
R67		ERJ6GEYJ123	M.RESISTOR CH 1/10W 12K	1	
R68		ERJ6GEYJ103	M.RESISTOR CH 1/10W 10K	1	
R69		ERJ6GEYJ102	M.RESISTOR CH 1/10W 1K	1	
R70		ERJ6GEYJ474	M.RESISTOR CH 1/10W 470K	1	
R71		ERJ6GEYJ103	M.RESISTOR CH 1/10W 10K	1	
R72		ERJ6GEYJ223	M.RESISTOR CH 1/10W 22K	1	
R75		ERJ6GEYJ105	M.RESISTOR CH 1/10W 1M	1	
R76,77		ERJ6GEYJ102	M.RESISTOR CH 1/10W 1K	2	
R78,79		ERJ6GEYJ105	M.RESISTOR CH 1/10W 1M	2	
R80,81		ERJ6GEYJ102	M.RESISTOR CH 1/10W 1K	2	
R82		ERJ6GEYJ105	M.RESISTOR CH 1/10W 1M	1	
R83,84		ERJ6GEYJ222	M.RESISTOR CH 1/10W 2.2K	2	
R85,86		ERJ6GEYJ104	M.RESISTOR CH 1/10W 100K	2	
R87		ERJ6GEYJ563	M.RESISTOR CH 1/10W 56K	1	
R88		ERJ6GEYJ105	M.RESISTOR CH 1/10W 1M	1	
R89		ERJ6GEYJ104	M.RESISTOR CH 1/10W 100K	1	
R90		ERJ6GEYJ563	M.RESISTOR CH 1/10W 56K	1	
R91		ERJ6GEYJ105	M.RESISTOR CH 1/10W 1M	1	
R92		ERJ6GEYJ103	M.RESISTOR CH 1/10W 10K	1	
R93		ERG12SJ220	M.RESISTOR 1/2W 22	1	
R94		ERJ6GEYJ222	M.RESISTOR CH 1/10W 2.2K	1	
R95		ERJ6GEYJ474	M.RESISTOR CH 1/10W 470K	1	
R96		ERJ6GEYJ104	M.RESISTOR CH 1/10W 100K	1	
R97		ERJ6GEYJ332	M.RESISTOR CH 1/10W 3.3K	1	
R98,99		ERJ6GEYJ181	M.RESISTOR CH 1/10W 180	2	
R100,01		ERJ6GEYJ181	M.RESISTOR CH 1/10W 180	2	
R200		ERJ6GEYJ123	M.RESISTOR CH 1/10W 12K	1	
R201		ERJ6GEYJ103	M.RESISTOR CH 1/10W 10K	1	
R202		ERJ6GEYJ101	M.RESISTOR CH 1/10W 100	1	
R203		ERJ6GEYJ272	M.RESISTOR CH 1/10W 2.7K	1	
R204		ERJ6GEYJ822	M.RESISTOR CH 1/10W 8.2K	1	
R205-08		ERJ6GEYJ102	M.RESISTOR CH 1/10W 1K	4	
R209		ERJ6GEYJ563	M.RESISTOR CH 1/10W 56K	1	
R210		ERJ6GEYJ123	M.RESISTOR CH 1/10W 12K	1	
R211		ERJ6GEYJ101	M.RESISTOR CH 1/10W 100	1	
			MISCELLANEOUS		
		VHN0011	NYLON NUT	5	
		VJF0304	CLAMPER	8	
		VMZ1716	BARRIER	1	
	■	VEP80333B	P.C.BOARD W/COMPONENT		
			METER LAMP		
LED1-D4		VLL0048	LED	4	
LED9		VLL0048	LED	1	
LED10-16		VLL0048	LED	7	
P100		VJP1149	CONNECTOR(MALE)	1	
			RESISTORS		
R1		ERDS1TJ152	C.RESISTOR 1/2W 1.5K	1	
R3,R4		ERDS1TJ152	C.RESISTOR 1/2W 1.5K	2	
			MISCELLANEOUS		
		KL-02	LED SPACER	12	

Refer to the P.C.BOARDS LIST, page 6-1-1, before using this page.

Ref.No.		Part No.	Part Name & Description	Pcs	Remarks
	■	VEP81042A	P.C.BOARD W/COMPONENT		
			POWER FILTER		
			CAPACITORS		
C2		ECQU2A224MN	P.CAPACITOR 250V 0.22U	1	
C3-C6		VCK0083	C.CAPACITOR 3300P	4	
C7		ECQU2A224MN	P.CAPACITOR 250V 0.22U	1	
F1		XBA1C63NU100	FUSE A	1	
L1		VLF0873	COIL	1	
POWER20-22		VJP2638	CONNECTOR (MALE)	3	
			MISCELLANEOUS		
		VJF0318	HOLDER	2	
		VMZ0730	BARRIER	4	
	■	VEP81058A	P.C.BOARD W/COMPONENT		
			POWER FILTER		
			CAPACITORS		
C2		ECQU2A224MN	P.CAPACITOR 250V 0.22U	1	
C3-C6		VCK0046	.CAPACITOR V	4	
C7		ECQU2A224MN	P.CAPACITOR 250V 0.22U	1	
F1		XBA2C63TB0	FUSE	1	
L1		VLF0930	COIL	1	
POWER20-22		VJP2638	CONNECTOR (MALE)	3	
			MISCELLANEOUS		
		VJF0318	FUSE HOLDER	2	
		VMZ0730	CAPACITANCE COVER	4	
		VMZ1305	CAPACITANCE COVER	2	

Ref.No.		Part No.	Part Name & Description	Pcs	Remarks
		VYK3004	P.C.BOARD W/COMPONENT		
			POWER SUPPLY UNIT		
			CAPACITORS		
C1		ECQU2A224MT	P.CAPACITOR AC250V 0.22U	1	
C2		ECQU2A224MT	P.CAPACITOR AC250V 0.22U	1	
C3		ECQB1H473KF	P.CAPACITOR 50V 0.047U	1	
C4,C5		ECQV1J105JZ	P.CAPACITOR 1U	2	
C6,C7		ECKDRS222ME	C.CAPACITOR AC400V 2200P	2	
C8,C9		ECOS2EA681EA	E.CAPACITOR 250V 680U	2	
C10		ECQE6104KF	P.CAPACITOR 630V 0.1UF	1	
C11		ECQB1H333KF	P.CAPACITOR 50V 0.033U	1	
C12		ECKD3A471KBP	C.CAPACITOR 1KV 470U	1	
C13		ECQV1J105JZ	P.CAPACITOR 1U	1	
C14		ECEA1VFE101	E.CAPACITOR 35V 100U	1	
C15		ECKD3A471KBP	C.CAPACITOR 1KV 470U	1	
C16		ECQB1H102KF	P.CAPACITOR 50V 1000P	1	
C17		ECKD3A101KB	C.CAPACITOR 1KV 100U	1	
C18,19		ECKDRS222ME	C.CAPACITOR AC400V 2200P	2	
C20		ECQB1H683KF	P.CAPACITOR 50V 0.068U	1	
C51		ECKD3A102KB	C.CAPACITOR 1KV 1000P	1	
C52		ECKD3A681KB	C.CAPACITOR 1KV 680U	1	
C53		ECEA1VFE102	E.CAPACITOR 35V 1000U	1	
C54		ECQB1H152KF	P.CAPACITOR 50V 1500P	1	
C55		ECQB1H102KF	P.CAPACITOR 50V 1000P	1	
C56		ECKD3A102KB	C.CAPACITOR 1KV 1000P	1	
C57		ECKD3A681KB	C.CAPACITOR 1KV 680U	1	
C58		ECA1AFQ102L	E.CAPACITOR 10V 1000U	1	
C59		ECEA1AFE152	E.CAPACITOR 10V 1500U	1	
C60		ECEA1HFE331	E.CAPACITOR 50V 330U	1	
C61		ECEA1EFE221	E.CAPACITOR 25V 220U	1	
C62,63		ECQB1H102KF	P.CAPACITOR 50V 1000P	2	
C64,65		ECKD3A681KB	C.CAPACITOR 1KV 680U	2	
C66		ECEA1VFE102	E.CAPACITOR 25V 1000U	1	
C67		ECQB1H102KF	P.CAPACITOR 50V 1000P	1	
C68,69		ECKD3A681KB	C.CAPACITOR 1KV 680U	2	
C70		ECEA1EFE681	E.CAPACITOR 25V 680U	1	
C71		ECEA1EFE471L	E.CAPACITOR 25V 470U	1	
C72		ECQB1H102KF	P.CAPACITOR 50V 1000P	1	
C73,74		ECKD3A681KB	C.CAPACITOR 1KV 680U	2	
C75		ECEA1CFE821	E.CAPACITOR 16V 820U	1	
C76		ECEA1CFE681	E.CAPACITOR 16V 680U	1	
C77		ECQB1H102KF	P.CAPACITOR 50V 1000P	1	
C78		ECEA1CFE821	E.CAPACITOR 16V 820U	1	
C79		ECEA1CFE681	E.CAPACITOR 16V 680U	1	
C80		ECQB1H102KF	P.CAPACITOR 50V 1000P	1	
C81		ECEA1CFE681	E.CAPACITOR 16V 680U	1	
C82,83		ECEA1EFE471L	E.CAPACITOR 25V 470U	2	
C84		ECQB1H104KF	P.CAPACITOR 50V 0.1U	1	
C85-88		ECKD3A681KB	C.CAPACITOR 1KV 680U	4	
C89		ECEA1HFE270	E.CAPACITOR 50V 27U	1	
C90		ECA1EKF100	E.CAPACITOR 25V 10U	1	
C91		ECEA1EFE471L	E.CAPACITOR 25V 470U	1	
C92		ECQB1H222KF	P.CAPACITOR 50V 2200P	1	
C93		ECQB1H102KF	P.CAPACITOR 50V 1000P	1	
C94		ECQB1H473KF	P.CAPACITOR 50V 0.047U	1	
C95		ECQV1H224JZ	P.CAPACITOR 50V 0.22U	1	
C96		ECQB1H103KF	P.CAPACITOR 50V 0.01U	1	
CP1		VJP2824B004	CONNECTOR (MALE)	1	
CP2		VJP3015	CONNECTOR (MALE)	1	
CP51		VJP2824B006	CONNECTOR (MALE)	1	
CP52		VJP2824B007	CONNECTOR (MALE)	1	
CP53		VJP2824B008	CONNECTOR (MALE)	1	
CP54		VJP3016	CONNECTOR (MALE)	1	
CR1		AC08FGM	DIODE	1	

Refer to the P.C.BOARDS LIST, page 6-1-1, before using this page.

Ref.No.		Part No.	Part Name & Description	Pcs	Remarks
CR2		ERB44-06	DIODE	1	
CR4,R5		RD75EB	ZENER	1	
CR4,R5		RD68EB	ZENER	2	
CR6		RD12EB2	DIODE	1	
CR7		RBV606	DIODE	1	
CR8,R9		1SS118	DIODE	2	
CR10		AC08DGM	DIODE	1	
CR11		N413	DIODE	1	
CR12		11DF2	DIODE	1	
CR13		ERB37-10	DIODE	1	
CR14		11DF2	DIODE	1	
CR15,16		ERB37-10	DIODE	2	
CR51		ESAC92M-03	DIODE	1	
CR52		CTB-34	DIODE	1	
CR53-55		1SS120	DIODE	3	
CR56		RD13EB2	ZENER	1	
CR57		1SS120	DIODE	1	
CR58		RD9.1ESB2	ZENER	1	
CR59		RD39EB2	ZENER	1	
CR60		1SS120	DIODE	1	
CR61		RD9.1ESB2	ZENER	1	
CR62		1SS120	DIODE	1	
CR63		RD5.6JSB2	ZENER	1	
CR64		HZS6.8NB2	DIODE	1	
CR65		*03P2M*	*THYRISTOR*	1	
CR66		1SS118	DIODE	1	
CR67-69		1SS120	DIODE	3	
CR70		ESAB92M-02	DIODE	1	
CR71,72		1SS120	DIODE	2	
CR74,73		ESAB92M-02	DIODE	2	
CR75-77		1SS120	DIODE	3	
CR78		RD4.7JSB2	ZENER	1	
CR79		1SS118	DIODE	1	
CR80,81		1SS120	DIODE	2	
CR82		RD3.0ESB2	ZENER	1	
CR83		11DF2	DIODE	1	
CR84,85		ESAB92-02N	DIODE	2	
CR86		1SS120	DIODE	1	
CR87		11DF2	DIODE	1	
CR88		1SS120	DIODE	1	
CR89,90		11DF2	DIODE	2	
F1		EYP2BN098	FUSE	1	
IC51,52		MB3759P	IC	2	
IC53		UPC339C	IC	1	
IC54		UPC337H	IC	1	
L1		VLF0873	FILTER	1	
L51,52		VLQ0477	COIL	2	
L53		VLQ0478	COIL	1	
L54		VLQ0479	COIL	1	
L55		VLQ0480	COIL	1	
L56		VLQ0481	COIL	1	
L57,58		VLQ0482	COIL	2	
L59		VLQ0483	COIL	1	
Q1		2SA1015Y	TRANSISTOR	1	
Q2		2SA562TMY	TRANSISTOR	1	
Q3		2SA1015Y	TRANSISTOR	1	
Q4		2SK719	TRANSISTOR	1	
Q5		2SA562TMY	TRANSISTOR	1	
Q6		2SK794	TRANSISTOR	1	
Q7		2SA562TMY	TRANSISTOR	1	
Q51		2SD880Y	TRANSISTOR	1	
Q52		2SD1406	TRANSISTOR	1	
Q53		2SC2655Y	TRANSISTOR	1	

Ref.No.		Part No.	Part Name & Description	Pcs	Remarks
Q54		2SC1815Y	TRANSISTOR	1	
Q56		2SC1815Y	TRANSISTOR	1	
Q57		2SC2655Y	TRANSISTOR	1	
Q58		2SA1015Y	TRANSISTOR	1	
Q59		2SC1815Y	TRANSISTOR	1	
Q60		2SC1815Y	TRANSISTOR	1	
			RESISTORS		
R1		ERF5RJ220	W.RESISTOR 5W 22	1	
R2		ERDS2FJ102	C.RESISTOR 1/4W 1K	1	
R3		ERDS2FJ104	C.RESISTOR 1/4W 100K	1	
R4		ERDS2FJ473	C.RESISTOR 1/4W 47K	1	
R5		ERDS2FJ472	C.RESISTOR 1/4W 4.7K	1	
R6		ERD25FJ124	C.RESISTOR 1/4W 120K	1	
R7		ERDS2FJ105	C.RESISTOR 1/4W 1M	1	
R8		ERDS2FJ103	C.RESISTOR 1/4W 10K	1	
R9		ERDS2FJ473	C.RESISTOR 1/4W 47K	1	
R10		ERDS2FJ102	C.RESISTOR 1/4W 1K	1	
R11		ERG2SJ120	M.RESISTOR 2W 12	1	
R12		ERX2SJ3R9	M.RESISTOR 2W 3.9	1	
R13		ERD25FJ102	C.RESISTOR 1/4W 1K	1	
R14		ERG2SJ330	M.RESISTOR 2W 33	1	
R15,16		ERD50FJ184	C.RESISTOR 1/4W 180K	2	
R17,18		ERD50FJ104	C.RESISTOR 1/2W 100K	2	
R19		ERDS2FJ471	C.RESISTOR 1/4W 470	1	
R20		ERDS2FJ2R2	C.RESISTOR 1/4W 2.2	1	
R21		ERF5RJ220	W.RESISTOR 5W 22	1	
R22		ERD50FJ100	C.RESISTOR 1/2W 10	1	
R23		ERD50FJ150	C.RESISTOR 1/2W 15	1	
R24		ERD50FJ471	C.RESISTOR 1/2W 470	1	
R25		ERF5RJ220	W.RESISTOR 5W 22	1	
R26		ERDS2FJ471	C.RESISTOR 1/6W 470	1	
R27		ERDS2FJ2R2	C.RESISTOR 1/4W 2.2	1	
R28		ERD50FJ150	C.RESISTOR 1/2W 15	1	
R29		ERD50FJ471	C.RESISTOR 1/2W 470	1	
R30		ERD50FJ100	C.RESISTOR 1/2W 10	1	
R31		ERD25FJ124	C.RESISTOR 1/4W 120K	1	
R32		ERD50FJ105	C.RESISTOR 1/4W 1M	1	
R33		ERG2SJ330	M.RESISTOR 2W 33	1	
R34		ERDS2FJ102	C.RESISTOR 1/4W 1K	1	
R35		ERD25FJ221	C.RESISTOR 1/4W 220	1	
R51,52		ERD50FJ100	C.RESISTOR 1/2W 10	2	
R53		ERF5RJ221	W.RESISTOR 5W 220	1	
R54		ERG1ANJ470	M.RESISTOR 1W 47	1	
R55		EROS2CHF1200	M.RESISTOR 1/6W 120	1	
R56		EROS2CHF39R0	M.RESISTOR 1/6W 39	1	
R57,58		ERD50FJ100	C.RESISTOR 1/2W 10	2	
R59-61		ERD50FJ101	C.RESISTOR 1/2W 100	3	
R62,63		ERD50FJ122	C.RESISTOR 1/2W 1.2K	2	
R64		ERDS2FJ471	C.RESISTOR 1/4W 470	1	
R65		ERD25FJ471	C.RESISTOR 1/4W 470	1	
R66		EROS2CHF4702	M.RESISTOR 1/4W 47K	1	
R67		EROS2CHF1802	M.RESISTOR 1/4W 18K	1	
R68		ERDS2FJ101	C.RESISTOR 1/4W 100	1	
R69,70		ERDS2FJ102	C.RESISTOR 1/4W 1K	2	
R71		ERD25FJ6R8	C.RESISTOR 1/4W 6.8K	1	
R72		ERD50FJ102	C.RESISTOR 1/2W 1K	1	
R73		ERDS2FJ331	C.RESISTOR 1/4W 330	1	
R74		ERDS2FJ102	C.RESISTOR 1/4W 1K	1	
R75		ERDS2FJ222	C.RESISTOR 1/4W 2.2K	1	
R76		ERDS2FJ912	C.RESISTOR 1/4W 9.1K	1	
R77		EROS2CHF1201	M.RESISTOR 1/4W 1.2K	1	
R78		ERDS2FJ102	C.RESISTOR 1/4W 1K	1	
R79		ERDS2FJ223	C.RESISTOR 1/4W 22K	1	
R80		ERDS2FJ104	C.RESISTOR 1/4W 100K	1	
R81		VRV0064B102	V.RESISTOR 1K	1	
R82		EROS2CHF1801	M.RESISTOR 1/4W 1.8K	1	
R83		EROS2CHF6800	M.RESISTOR 1/4W 680	1	
R84		ERDS2FJ222	C.RESISTOR 1/4W 2.2K	1	
R85		VRT0029	THERMISTER	1	
R86		ERDS2FJ332	C.RESISTOR 1/4W 3.3K	1	
R87		ERDS2FJ222	C.RESISTOR 1/4W 2.2K	1	
R89		ERDS2FJ103	C.RESISTOR 1/4W 10K	1	

Refer to the P.C.BOARDS LIST, page 6-1-1, before using this page.

Ref.No.		Part No.	Part Name & Description	Pcs	Remarks
R90		ERDS2FJ222	C.RESISTOR 1/4W 2.2K	1	
R91		EROS2CHF1800	M.RESISTOR 1/4W 180	1	
R92,93		ERD50FJ100	C.RESISTOR 1/2W 10	2	
R94		ERD50FJ122	C.RESISTOR 1/2W 1.2K	1	
R95		EROS2CHF1500	M.RESISTOR 1/4W 150	1	
R96,97		ERD50FJ100	C.RESISTOR 1/2W 10	2	
R98		ERD50FJ102	C.RESISTOR 1/2W 1K	1	
R99		ERDS2FJ102	C.RESISTOR 1/4W 1K	1	
R100		EROS2CHF2700	M.RESISTOR 1/4W 270	1	
R101,02		ERD50FJ100	C.RESISTOR 1/2W 10	2	
R103		ERD50FJ471	C.RESISTOR 1/2W 470	1	
R104		EROS2CHF2700	M.RESISTOR 1/4W 270	1	
R105		ERD50FJ102	C.RESISTOR 1/2W 1K	1	
R106		ERD50FJ561	C.RESISTOR 1/2W 560	1	
R107		EROS2CHF2700	M.RESISTOR 1/4W 270	1	
R108		ERD25FJ471	C.RESISTOR 1/4W 470	1	
R109		EROS2CHF4702	M.RESISTOR 1/4W 47K	1	
R110		EROS2CHF2202	M.RESISTOR 1/4W 22K	1	
R111		ERDS2FJ471	C.RESISTOR 1/4W 470	1	
R112		ERD25FJ6R8	C.RESISTOR 1/4W 6.8K	1	
R113		ERD50FJ681	C.RESISTOR 1/2W 680	1	
R114		ERDS2FJ331	C.RESISTOR 1/4W 330	1	
R115		ERDS2FJ102	C.RESISTOR 1/4W 1K	1	
R116		ERDS2FJ331	C.RESISTOR 1/4W 330	1	
R117		ERDS2FJ471	C.RESISTOR 1/4W 470	1	
R118		EROS2CHF2201	M.RESISTOR 1/4W 2.2K	1	
R119		EROS2CHF1501	M.RESISTOR 1/4W 1.5K	1	
R120		ERDS2FJ223	C.RESISTOR 1/4W 22K	1	
R121		EROS2CHF1201	M.RESISTOR 1/4W 1.2K	1	
R122		VRV0064B102	V.RESISTOR 1K	1	
R123		EROS2CHF3301	M.RESISTOR 1/4W 3.3K	1	
R124		ERDS2FJ121	C.RESISTOR 1/4W 120	1	
R125		EROS2CHF1101	M.RESISTOR 1/4W 1.1K	1	
R126-29		ERD50FJ100	C.RESISTOR 1/2W 10	4	
R130		EROS2CHF6800	M.RESISTOR 1/4W 680	1	
R131,32		ERDS2FJ332	C.RESISTOR 1/4W 3.3K	2	
R134		ERDS2FJ103	C.RESISTOR 1/4W 10K	1	
R135		ERDS2FJ562	C.RESISTOR 1/4W 5.6K	1	
R136		ERDS2FJ102	C.RESISTOR 1/4W 1K	1	
R137		ERDS2FJ392	C.RESISTOR 1/4W 3.9K	1	
R138		ERDS2FJ102	C.RESISTOR 1/4W 1K	1	
R139		ERDS2FJ101	C.RESISTOR 1/4W 100	1	
R140,41		ERDS2FJ102	C.RESISTOR 1/4W 1K	2	
R142		ERDS2FJ182	C.RESISTOR 1/4W 1.8K	1	
R143		ERDS2FJ222	C.RESISTOR 1/4W 2.2K	1	
R144		ERF5RJ221	W.RESISTOR 5W 220	1	
R146		EROS2CHF3000	M.RESISTOR 1/4W 300	1	
T1		VTP0324	TRANSFORMER	1	
T2		VTP0325	TRANSFORMER	1	
T3,T4		VTP0326	TRANSFORMER	2	
T51-57		VLT0630	TRANSFORMER	7	
			MISCELLANEOUS		
		VHD0601	SCREW	4	
		VMP2697	SUPPORT	2	
		VMZ1609	INSULATOR	2	
		VMZ1610	INSULATOR	2	
		VSC3124	COOLING BODY	2	
		VSC3125	COOLING BODY	1	
		VSC3136	INSULATOR	1	
		XNG3ES	NUT	1	
		XYNV3+K8	SCREW	12	
		VYK3637	P.C.BOARD W/COMPONENT		
			POWER SUPPLY UNIT		

Ref.No.		Part No.	Part Name & Description	Pcs	Remarks
			CAPACITORS		
C1		ECQU2A224MT	P.CAPACITOR AC250V 0.22U	1	
C2		ECQU2A224MT	P.CAPACITOR AC250V 0.22U	1	
C3		ECQB1H473KF	P.CAPACITOR 50V 0.047U	1	
C4,C5		ECQV1J105JZ	P.CAPACITOR 1U	2	
C6,C7		ECKDRS222ME	C.CAPACITOR AC400V 2200P	2	
C8,C9		ECOS2EA681EA	E.CAPACITOR 250V 680U	2	
C10		ECQE6104KF	P.CAPACITOR 630V 0.1UF	1	
C11		ECQB1H333KF	P.CAPACITOR 50V 0.033U	1	
C12		ECKD3A471KBP	C.CAPACITOR 1KV 470U	1	
C13		ECQV1J105JZ	P.CAPACITOR 1U	1	
C14		ECEA1VFE101	E.CAPACITOR 35V 100U	1	
C15		ECKD3A471KBP	C.CAPACITOR 1KV 470U	1	
C16		ECQV1J105JZ	P.CAPACITOR 63V 1UF	1	
C17		ECKD3A101KBP	C.CAPACITOR 1KV 100U	1	
C18,19		ECKDRS222ME	C.CAPACITOR AC400V 2200P	2	
C20		ECQB1H683KF	P.CAPACITOR 50V 0.068U	1	
C51		ECKD3A102KBP	C.CAPACITOR 1KV 1000P	1	
C52		ECKD3A681KBP	C.CAPACITOR 1KV 680U	1	
C53		ECEA1VFE102	E.CAPACITOR 35V 1000U	1	
C54		ECQB1H152KF	P.CAPACITOR 50V 1500P	1	
C55		ECQB1H102KF	P.CAPACITOR 50V 1000P	1	
C56		ECKD3A102KBP	C.CAPACITOR 1KV 1000P	1	
C57		ECKD3A681KBP	C.CAPACITOR 1KV 680U	1	
C58		ECA1AFQ102L	E.CAPACITOR 10V 1000U	1	
C59		ECEA1AFE152	E.CAPACITOR 10V 1500U	1	
C60		ECEA1HFE331	E.CAPACITOR 50V 330U	1	
C61		ECEA1EFE221	E.CAPACITOR 25V 220U	1	
C62,63		ECQB1H102KF	P.CAPACITOR 50V 1000P	2	
C64,65		ECKD3A681KBP	C.CAPACITOR 1KV 680U	2	
C66		ECEA1VFE102	E.CAPACITOR 25V 1000U	1	
C67		ECQB1H102KF	P.CAPACITOR 50V 1000P	1	
C68,69		ECKD3A681KBP	C.CAPACITOR 1KV 680U	2	
C70		ECEA1EFE681	E.CAPACITOR 25V 680U	1	
C71		ECEA1EFE471	E.CAPACITOR 25V 470U	1	
C72		ECQB1H102KF	P.CAPACITOR 50V 1000P	1	
C73,74		ECKD3A681KBP	C.CAPACITOR 1KV 680U	2	
C75		ECEA1CFE821	E.CAPACITOR 16V 820U	1	
C76		ECEA1CFE681	E.CAPACITOR 16V 680U	1	
C77		ECQB1H102KF	P.CAPACITOR 50V 1000P	1	
C78		ECEA1CFE821	E.CAPACITOR 16V 820U	1	
C79		ECEA1CFE681	E.CAPACITOR 16V 680U	1	
C80		ECQB1H102KF	P.CAPACITOR 50V 1000P	1	
C81		ECEA1CFE681	E.CAPACITOR 16V 680U	1	
C82,83		ECEA1EFE471	E.CAPACITOR 25V 470U	2	
C84		ECQB1H104KF	P.CAPACITOR 50V 0.1U	1	
C85-88		ECKD3A681KBP	C.CAPACITOR 1KV 680U	4	
C89		ECEA1HFE270	E.CAPACITOR 50V 27U	1	
C90		ECA1EKF100	E.CAPACITOR 25V 10U	1	
C91		ECEA1EFE471	E.CAPACITOR 25V 470U	1	
C92		ECQB1H222KF	P.CAPACITOR 50V 2200P	1	
C93		ECQB1H102KF	P.CAPACITOR 50V 1000P	1	
C94		ECQB1H473KF	P.CAPACITOR 50V 0.047U	1	
C95		ECQV1H224JZ	P.CAPACITOR 50V 0.22U	1	
C96		ECQB1H103KF	P.CAPACITOR 50V 0.01U	1	
CP1		VJP2824B004	CONNECTOR (MALE)	1	
CP2		VJP3015	CONNECTOR (MALE)	1	
CP51		VJP2824B006	CONNECTOR (MALE)	1	
CP52		VJP2824B007	CONNECTOR (MALE)	1	
CP53		VJP2824B008	CONNECTOR (MALE)	1	
CP54		VJP3016	CONNECTOR (MALE)	1	
CR1		AC08FGM	DIODE	1	
CR2		ERB44-06	DIODE	1	

Refer to the P.C.BOARDS LIST, page 6-1-1, before using this page.

Ref.No.		Part No.	Part Name & Description	Pcs	Remarks
CR3		RD75EB	ZENER	1	
CR4,R5		RD68EB	ZENER	2	
CR6		RD12EB2	DIODE	1	
CR7		RBV606	DIODE	1	
CR8,R9		1SS118	DIODE	2	
CR10		AC08FGM	DIODE	1	
CR11		N413	DIODE	1	
CR12		11DF2	DIODE	1	
CR13		ERB37-10	DIODE	1	
CR14		11DF2	DIODE	1	
CR15,16		ERB37-10	DIODE	2	
CR51		ESAC92M-03	DIODE	1	
CR52		CTB-34	DIODE	1	
CR53,54		1SS120	DIODE	3	
CR55		11DF2	DIODE	1	
CR56		RD13EB2	ZENER	1	
CR57		1SS120	DIODE	1	
CR58		RD9.1ESB2	ZENER	1	
CR59		RD39ESB2	ZENER	1	
F1		EYP2BN098	FUSE	1	
L1		VLF0930	FILTER	1	
Q1		2SA1015Y	TRANSISTOR	1	
Q2		2SA562TMY	TRANSISTOR	1	
Q3		2SA1015Y	TRANSISTOR	1	
Q53		2SC2655Y	TRANSISTOR	1	
Q54		2SC1815Y	TRANSISTOR	1	
Q56		2SC1815Y	TRANSISTOR	1	
Q57		2SC2655Y	TRANSISTOR	1	
Q58		2SA1015Y	TRANSISTOR	1	
Q59		2SC1815Y	TRANSISTOR	1	
Q60		2SC1815Y	TRANSISTOR	1	
			RESISTORS		
R1		ERF5RJ220	W.RESISTOR 5W 22	1	
R2		ERDS2FJ102	C.RESISTOR 1/4W 1K	1	
R3		ERDS2FJ104	C.RESISTOR 1/4W 100K	1	
R4		ERDS2FJ473	C.RESISTOR 1/4W 47K	1	
R5		ERDS2FJ472	C.RESISTOR 1/4W 4.7K	1	
R6		ERD25FJ124	C.RESISTOR 1/4W 120K	1	
R7		ERDS2FJ105	C.RESISTOR 1/4W 1M	1	
R8		ERDS2FJ103	C.RESISTOR 1/4W 10K	1	
R9		ERDS2FJ473	C.RESISTOR 1/4W 47K	1	
R10		ERDS2FJ102	C.RESISTOR 1/4W 1K	1	
R11		ERG2SJ120	M.RESISTOR 2W 12	1	
R12		ERX2SJ3R9	M.RESISTOR 2W 3.9	1	
R13		ERD25FJ102	C.RESISTOR 1/4W 1K	1	
R14		ERG2SJ330	M.RESISTOR 2W 33	1	
R15,16		ERD50FJ184	C.RESISTOR 1/4W 180K	2	
R17,18		ERD50FJ104	C.RESISTOR 1/2W 100K	2	
R19		ERDS2FJ471	C.RESISTOR 1/4W 470	1	
R20		ERDS2FJ2R2	C.RESISTOR 1/4W 2.2	1	
R21		ERF5RJ220	W.RESISTOR 5W 22	1	
R22		ERD50FJ100	C.RESISTOR 1/2W 10	1	
R23		ERD50FJ150	C.RESISTOR 1/2W 15	1	
R24		ERD50FJ471	C.RESISTOR 1/2W 470	1	
R25		ERF5RJ220	W.RESISTOR 5W 22	1	
R26		ERDS2FJ471	C.RESISTOR 1/6W 470	1	
R27		ERDS2FJ2R2	C.RESISTOR 1/4W 2.2	1	
R28		ERD50FJ150	C.RESISTOR 1/2W 15	1	
R29		ERD50FJ471	C.RESISTOR 1/2W 470	1	
R30		ERD50FJ100	C.RESISTOR 1/2W 10	1	
R31		ERD25FJ124	C.RESISTOR 1/4W 120K	1	
R32		ERD50FJ105	C.RESISTOR 1/4W 1M	1	
R33		ERG2SJ330	M.RESISTOR 2W 33	1	

Ref.No.		Part No.	Part Name & Description	Pcs	Remarks
R34		ERDS2FJ102	C.RESISTOR 1/4W 1K	1	
R35		ERD25FJ221	C.RESISTOR 1/4W 220	1	
R51,52		ERD50FJ100	C.RESISTOR 1/2W 10	2	
R53		ERF5RJ221	W.RESISTOR 5W 220	1	
R54		ERG1ANJ470	M.RESISTOR 1W 47	1	
R55		EROS2CHF1000	M.RESISTOR 1/6W 100	1	
R56		EROS2CHF39R0	M.RESISTOR 1/6W 39	1	
R57,58		ERD50FJ100	C.RESISTOR 1/2W 10	2	
R59-61		ERD50FJ101	C.RESISTOR 1/2W 100	3	
R62,63		ERD50FJ122	C.RESISTOR 1/2W 1.2K	2	
R64		ERDS2FJ471	C.RESISTOR 1/4W 470	1	
R65		ERD25FJ471	C.RESISTOR 1/4W 470	1	
R66		EROS2CHF4702	M.RESISTOR 1/4W 47K	1	
R67		EROS2CHF1802	M.RESISTOR 1/4W 18K	1	
R68		ERDS2FJ101	C.RESISTOR 1/4W 100	1	
R69,70		ERDS2FJ102	C.RESISTOR 1/4W 1K	2	
R71		ERD25FJ6R8	C.RESISTOR 1/4W 6.8K	1	
R72		ERD50FJ102	C.RESISTOR 1/2W 1K	1	
R73		ERDS2FJ331	C.RESISTOR 1/4W 330	1	
R74		ERDS2FJ102	C.RESISTOR 1/4W 1K	1	
R75		ERDS2FJ222	C.RESISTOR 1/4W 2.2K	1	
R76		ERDS2FJ912	C.RESISTOR 1/4W 9.1K	1	
R77		EROS2CHF1201	M.RESISTOR 1/4W 1.2K	1	
R78		ERDS2FJ102	C.RESISTOR 1/4W 1K	1	
R79		ERDS2FJ223	C.RESISTOR 1/4W 22K	1	
R80		ERDS2FJ104	C.RESISTOR 1/4W 100K	1	
R81		VRV0112B102	V.RESISTOR 1/2W 1K	1	
R82		EROS2CHF1801	M.RESISTOR 1/4W 1.8K	1	
R83		EROS2CHF6800	M.RESISTOR 1/4W 680	1	
R84		ERDS2FJ222	C.RESISTOR 1/4W 2.2K	1	
R85		VRT0029	THERMISTER	1	
R86		ERDS2FJ332	C.RESISTOR 1/4W 3.3K	1	
R87		ERDS2FJ222	C.RESISTOR 1/4W 2.2K	1	
R89		ERDS2FJ103	C.RESISTOR 1/4W 10K	1	
R90		ERDS2FJ222	C.RESISTOR 1/4W 2.2K	1	
R91		EROS2CHF1800	M.RESISTOR 1/4W 180	1	
R92,93		ERD50FJ100	C.RESISTOR 1/2W 10	2	
R94		ERD50FJ122	C.RESISTOR 1/2W 1.2K	1	
R95		EROS2CHF1500	M.RESISTOR 1/4W 150	1	
R96,97		ERD50FJ100	C.RESISTOR 1/2W 10	2	
R98		ERD50FJ102	C.RESISTOR 1/2W 1K	1	
R99		ERDS2FJ102	C.RESISTOR 1/4W 1K	1	
R100		EROS2CHF2700	M.RESISTOR 1/4W 270	1	
R101,02		ERD50FJ100	C.RESISTOR 1/2W 10	2	
R103		ERD50FJ471	C.RESISTOR 1/2W 470	1	
R104		EROS2CHF2700	M.RESISTOR 1/4W 270	1	
R105		ERD50FJ102	C.RESISTOR 1/2W 1K	1	
R106		ERD50FJ561	C.RESISTOR 1/2W 560	1	
R107		EROS2CHF2700	M.RESISTOR 1/4W 270	1	
R108		ERD25FJ471	C.RESISTOR 1/4W 470	1	
R109		EROS2CHF4702	M.RESISTOR 1/4W 47K	1	
R110		EROS2CHF2202	M.RESISTOR 1/4W 22K	1	
R111		ERDS2FJ471	C.RESISTOR 1/4W 470	1	
R112		ERD25FJ6R8	C.RESISTOR 1/4W 6.8K	1	
R113		ERD50FJ681	C.RESISTOR 1/2W 680	1	
R114		ERDS2FJ331	C.RESISTOR 1/4W 330	1	
R115		ERDS2FJ102	C.RESISTOR 1/4W 1K	1	
R116		ERDS2FJ331	C.RESISTOR 1/4W 330	1	
R117		ERDS2FJ471	C.RESISTOR 1/4W 470	1	
R118		EROS2CHF2201	M.RESISTOR 1/4W 2.2K	1	
R119		EROS2CHF1501	M.RESISTOR 1/4W 1.5K	1	
R120		ERDS2FJ223	C.RESISTOR 1/4W 22K	1	
R121		EROS2CHF1201	M.RESISTOR 1/4W 1.2K	1	
R122		VRV0112B102	V.RESISTOR 1/2W 1K	1	
R123		EROS2CHF3301	M.RESISTOR 1/4W 3.3K	1	
R124		ERDS2FJ121	C.RESISTOR 1/4W 120	1	
R125		EROS2CHF1101	M.RESISTOR 1/4W 1.1K	1	
R126-29		ERD50FJ100	C.RESISTOR 1/2W 10	4	
R130		EROS2CHF6800	M.RESISTOR 1/4W 680	1	
R131,32		ERDS2FJ332	C.RESISTOR 1/4W 3.3K	2	
R134		ERDS2FJ103	C.RESISTOR 1/4W 10K	1	
R135		ERDS2FJ562	C.RESISTOR 1/4W 5.6K	1	
R136		ERDS2FJ102	C.RESISTOR 1/4W 1K	1	
R137		ERDS2FJ392	C.RESISTOR 1/4W 3.9K	1	
R138		ERDS2FJ102	C.RESISTOR 1/4W 1K	1	

Refer to the P.C.BOARDS LIST, page 6-1-1, before using this page.

Ref.No.		Part No.	Part Name & Description	Pcs	Remarks
R139		ERDS2FJ101	C.RESISTOR 1/4W 100	1	
R140,41		ERDS2FJ102	C.RESISTOR 1/4W 1K	2	
R142		ERDS2FJ182	C.RESISTOR 1/4W 1.8K	1	
R143		ERDS2FJ222	C.RESISTOR 1/4W 2.2K	1	
R144		ERF5RJ221	W.RESISTOR 5W 220	1	
R146		EROS2CHF3000	M.RESISTOR 1/4W 300	1	
T1		VTP0324	TRANSFORMER	1	
T2		VTP0325	TRANSFORMER	1	
T3,T4		VTP0326	TRANSFORMER	2	
T51-57		VLT0630	TRANSFORMER	7	
			MISCELLANEOUS		
		VHD0601	SCREW	4	
		VMP2697	SUPPORT	2	
		VMZ1609	INSULATOR	2	
		VMZ1610	INSULATOR	2	
		VSC3125	COOLING BODY	1	
		VSC3136	INSULATOR	1	
		VSC3400	COOLING BODY	2	
		XNG3ES	SCREW (NUT)	2	
		XNG3ES	NUT	1	
		XYNV3+K8	SCREW	2	
		XYNV3+K8	SCREW	10	
	■	VEP85015A	P.C.BOARD W/COMPONENT		FOR AU-65-P
			RA & HA		
			CAPACITORS		
C1		ECEA1HUR33	E.CAPACITOR 50V 0.33U	1	
C2		ECEA1CU100	E.CAPACITOR 16V 10U	1	
C3		ECUM1H103KBN	C.CAPACITOR CH 50V 0.01U	1	
C4		ECEA1HUR33	E.CAPACITOR 50V 0.33U	1	
C5		ECEA1CU100	E.CAPACITOR 16V 10U	1	
C6		ECUM1H103KBN	C.CAPACITOR CH 50V 0.01U	1	
C7		ECEA1AU101	E.CAPACITOR 10V 100U	1	
C17		ECEA1AU101	E.CAPACITOR 10V 100U	1	
C27-30		ECUM1E104ZFN	C.CAPACITOR CH 25V 0.1U	4	
C31-39		ECUM1H103KBN	C.CAPACITOR CH 50V 0.01U	9	
C40		ECUM1E104ZFN	C.CAPACITOR CH 25V 0.1U	1	
C41		ECUM1H103KBN	C.CAPACITOR CH 50V 0.01U	1	
C42		ECUM1E104ZFN	C.CAPACITOR CH 25V 0.1U	1	
C43		ECUM1H103KBN	C.CAPACITOR CH 50V 0.01U	1	
C44		ECUM1E104ZFN	C.CAPACITOR CH 25V 0.1U	1	
C45		ECUM1H103KBN	C.CAPACITOR CH 50V 0.01U	1	
C46,47		ECUM1E104ZFN	C.CAPACITOR CH 25V 0.1U	2	
C48		ECUM1H470JCN	C.CAPACITOR CH 50V 47P	1	
C50		ECUM1E104ZFN	C.CAPACITOR CH 25V 0.1U	1	
C51		ECUM1H470JCN	C.CAPACITOR CH 50V 47P	1	
C53		ECUM1E104ZFN	C.CAPACITOR CH 25V 0.1U	1	
C56		ECUM1E104ZFN	C.CAPACITOR CH 25V 0.1U	1	
C59		ECUM1H103KBN	C.CAPACITOR CH 50V 0.01U	1	
C60		ECEA1AU101	E.CAPACITOR 10V 100U	1	
C61,62		ECUM1E104ZFN	C.CAPACITOR CH 25V 0.1U	2	
C63		ECUM1H103KBN	C.CAPACITOR CH 50V 0.01U	1	
C64		ECEA1AU101	E.CAPACITOR 10V 100U	1	
C65,66		ECUM1E104ZFN	C.CAPACITOR CH 25V 0.1U	2	
C67		ECUM1H103KBN	C.CAPACITOR CH 50V 0.01U	1	
C68		ECEA1AU101	E.CAPACITOR 10V 100U	1	
C69,70		ECUM1E104ZFN	C.CAPACITOR CH 25V 0.1U	2	
C71		ECUM1H103KBN	C.CAPACITOR CH 50V 0.01U	1	

Ref.No.		Part No.	Part Name & Description	Pcs	Remarks
C72		ECEA1AU101	E.CAPACITOR 10V 100U	1	
C73,74		ECUM1E104ZFN	C.CAPACITOR CH 25V 0.1U	2	
C75-78		ECEA1CU470	E.CAPACITOR 16V 47U	4	
C79		ECUM1H103KBN	C.CAPACITOR CH 50V 0.01U	1	
C80		ECEA1EU470	E.CAPACITOR 25V 47U	1	
C81-86		ECCD2H330JC	C.CAPACITOR 500V 33P	6	
C87		ECEA1EU470	E.CAPACITOR 25V 47U	1	
C88		ECUM1H103KBN	C.CAPACITOR CH 50V 0.01U	1	
C201		ECUM1H103KBN	C.CAPACITOR CH 50V 0.01U	1	
C202		ECEA1EU100	E.CAPACITOR 25V 10U	1	
C203		ECUM1H103KBN	C.CAPACITOR CH 50V 0.01U	1	
C204		ECSF0JE106	T.CAPACITOR 6.3V 10U	1	
C205		ECUM1H103KBN	C.CAPACITOR CH 50V 0.01U	1	
C206		ECUM1E104ZFN	C.CAPACITOR CH 25V 0.1U	1	
C207		ECEA1CU470	E.CAPACITOR 16V 47U	1	
C208,09		ECUM1H103KBN	C.CAPACITOR CH 50V 0.01U	2	
C210		ECEA1EU100	E.CAPACITOR 25V 10U	1	
C211		ECUM1H103KBN	C.CAPACITOR CH 50V 0.01U	1	
C212		ECSF0JE106	T.CAPACITOR 6.3V 10U	1	
C213		ECUM1H103KBN	C.CAPACITOR CH 50V 0.01U	1	
C214		ECUM1E104ZFN	C.CAPACITOR CH 25V 0.1U	1	
C215		ECEA1CU470	E.CAPACITOR 16V 47U	1	
C216,17		ECUM1H103KBN	C.CAPACITOR CH 50V 0.01U	2	
C218		ECEA1EU100	E.CAPACITOR 25V 10U	1	
C219		ECUM1H103KBN	C.CAPACITOR CH 50V 0.01U	1	
C220		ECSF0JE106	T.CAPACITOR 6.3V 10U	1	
C221		ECUM1H103KBN	C.CAPACITOR CH 50V 0.01U	1	
C222		ECUM1E104ZFN	C.CAPACITOR CH 25V 0.1U	1	
C223		ECEA1CU470	E.CAPACITOR 16V 47U	1	
C224,25		ECUM1H103KBN	C.CAPACITOR CH 50V 0.01U	2	
C226		ECEA1EU100	E.CAPACITOR 25V 10U	1	
C227		ECUM1H103KBN	C.CAPACITOR CH 50V 0.01U	1	
C228		ECSF0JE106	T.CAPACITOR 6.3V 10U	1	
C229		ECUM1H103KBN	C.CAPACITOR CH 50V 0.01U	1	
C230		ECUM1E104ZFN	C.CAPACITOR CH 25V 0.1U	1	
C231		ECEA1CU470	E.CAPACITOR 16V 47U	1	
C232		ECUM1H103KBN	C.CAPACITOR CH 50V 0.01U	1	
C233,34		ECEA1CU470	E.CAPACITOR 16V 47U	2	
C235,36		ECUM1E104ZFN	C.CAPACITOR CH 25V 0.1U	2	
CN81		VJP1511T	CONNECTOR(MALE)	1	
CN82		VJP1233R	CONNECTOR(MALE) 6P	1	
CN83		VJP1233T	CONNECTOR(MALE) 6P	1	
CN84		VJP1233G	CONNECTOR(MALE) 6P	1	
CN85		VJP1233T	CONNECTOR(MALE) 6P	1	
CN86		VJP1233G	CONNECTOR(MALE) 6P	1	
CN87		VJP1233T	CONNECTOR(MALE) 6P	1	
D201		MA151K	DIODE	1	
IC1		AN78N05	IC	1	
IC2		AN79N05	IC	1	
IC7-C9		AN6308S	IC	3	
IC10		AN6308S	IC	1	
IC11-14		NJM592M8	IC	4	
IC201-04		NJM592M8	IC	4	
IC205		AN78N09	IC	1	
L1-L6		VLQEL05F101K	COIL 100UH	6	
L7-L9		VLQEL05S470K	COIL (L)	3	
L10		VLQEL05S470K	COIL (L)	1	
L11,12		VLQEL05F101K	COIL 100UH	2	
L13,14		VLQ0211M3R3		2	
L201-05		VLQEL05F101K	COIL 100UH	5	

Refer to the P.C.BOARDS LIST, page 6-1-1, before using this page.

Ref.No.		Part No.	Part Name & Description	Pcs	Remarks
Q5-Q8		2SC2295	TRANSISTOR CHIP	4	(B,C)
Q9		2SC2851	TRANSISTOR	1	
Q10-16		2SC2851	TRANSISTOR	7	
Q17-23		2SB789	TRANSISTOR	7	(Q,R)
Q201		2SC3757	TRANSISTOR	1	(Q,R)
Q202,03		2SK316	TRANSISTOR	2	(Q)
Q204,05		2SC3757	TRANSISTOR	2	(Q,R)
Q206,07		2SK316	TRANSISTOR	2	(Q)
Q208,09		2SC3757	TRANSISTOR	2	(Q,R)
Q210,11		2SK316	TRANSISTOR	2	(Q)
Q212,13		2SC3757	TRANSISTOR	2	(Q,R)
Q214,15		2SK316	TRANSISTOR	2	(Q)
Q216		2SC3757	TRANSISTOR	1	(Q,R)
Q217		2SD602	TRANSISTOR CHIP	1	(Q,R,S)
Q218		UN2213	TRANSISTOR-RESISTOR	1	
Q219		2SB643	TRANSISTOR	1	
Q220,21		2SD602	TRANSISTOR CHIP	2	(Q,R,S)
Q222-25		2SC3757	TRANSISTOR	4	(Q,R)
			RESISTORS		
R8		ERJ6GEYJ750	M.RESISTOR CH 1/10W 75	1	
R16		ERJ6GEYJ750	M.RESISTOR CH 1/10W 75	1	
R21,22		ERJ6GEYJ470	M.RESISTOR CH 1/10W 47	2	
R27,28		ERJ6GEYJ470	M.RESISTOR CH 1/10W 47	2	
R29		ERJ6GEYJ103	M.RESISTOR CH 1/10W 10K	1	
R30		ERJ6GEYJ122	M.RESISTOR CH 1/10W 1.2K	1	
R31		ERJ6GEYJ103	M.RESISTOR CH 1/10W 10K	1	
R32		ERJ6GEYJ122	M.RESISTOR CH 1/10W 1.2K	1	
R33		ERJ6GEYJ103	M.RESISTOR CH 1/10W 10K	1	
R34		ERJ6GEYJ122	M.RESISTOR CH 1/10W 1.2K	1	
R35		ERJ6GEYJ103	M.RESISTOR CH 1/10W 10K	1	
R36		ERJ6GEYJ122	M.RESISTOR CH 1/10W 1.2K	1	
R37		ERJ6GEYJ222	M.RESISTOR CH 1/10W 2.2K	1	
R38		ERJ6GEYJ681	M.RESISTOR CH 1/10W 680	1	
R39		ERJ6GEYJ151	M.RESISTOR CH 1/10W 150	1	
R40		ERJ6GEYJ471	M.RESISTOR CH 1/10W 470	1	
R41		ERJ6GEYJ101	M.RESISTOR CH 1/10W 100	1	
R42		ERJ6GEYJ331	M.RESISTOR CH 1/10W 330	1	
R43,44		ERJ6GEYJ222	M.RESISTOR CH 1/10W 2.2K	2	
R45,46		ERJ6GEYJ470	M.RESISTOR CH 1/10W 47	2	
R47		ERJ6GEYJ222	M.RESISTOR CH 1/10W 2.2K	1	
R48		ERJ6GEYJ681	M.RESISTOR CH 1/10W 680	1	
R49		ERJ6GEYJ151	M.RESISTOR CH 1/10W 150	1	
R50		ERJ6GEYJ471	M.RESISTOR CH 1/10W 470	1	
R51		ERJ6GEYJ101	M.RESISTOR CH 1/10W 100	1	
R52		ERJ6GEYJ331	M.RESISTOR CH 1/10W 330	1	
R53,54		ERJ6GEYJ222	M.RESISTOR CH 1/10W 2.2K	2	
R55,56		ERJ6GEYJ470	M.RESISTOR CH 1/10W 47	2	
R57		ERJ6GEYJ222	M.RESISTOR CH 1/10W 2.2K	1	
R58		ERJ6GEYJ681	M.RESISTOR CH 1/10W 680	1	
R59		ERJ6GEYJ151	M.RESISTOR CH 1/10W 150	1	
R60		ERJ6GEYJ471	M.RESISTOR CH 1/10W 470	1	
R61		ERJ6GEYJ101	M.RESISTOR CH 1/10W 100	1	
R62		ERJ6GEYJ331	M.RESISTOR CH 1/10W 330	1	
R63,64		ERJ6GEYJ222	M.RESISTOR CH 1/10W 2.2K	2	
R65,66		ERJ6GEYJ470	M.RESISTOR CH 1/10W 47	2	
R67		ERJ6GEYJ222	M.RESISTOR CH 1/10W 2.2K	1	
R68		ERJ6GEYJ681	M.RESISTOR CH 1/10W 680	1	
R69		ERJ6GEYJ151	M.RESISTOR CH 1/10W 150	1	
R70		ERJ6GEYJ471	M.RESISTOR CH 1/10W 470	1	
R71		ERJ6GEYJ101	M.RESISTOR CH 1/10W 100	1	
R72		ERJ6GEYJ331	M.RESISTOR CH 1/10W 330	1	
R73,74		ERJ6GEYJ222	M.RESISTOR CH 1/10W 2.2K	2	
R75,76		ERJ6GEYJ470	M.RESISTOR CH 1/10W 47	2	
R77		ERJ6GEYJ152	M.RESISTOR CH 1/10W 1.5K	1	
R78		ERJ6GEYJ102	M.RESISTOR CH 1/10W 1K	1	
R79		ERDS2TJ470	C.RESISTOR 1/4W 47	1	
R80		ERJ6GEYJ680	M.RESISTOR CH 1/10W 68	1	
R81		ERDS2TJ470	C.RESISTOR 1/4W 47	1	
R82		ERJ6GEYJ102	M.RESISTOR CH 1/10W 1K	1	
R83		ERJ6GEYJ152	M.RESISTOR CH 1/10W 1.5K	1	
R84		ERJ6GEYJ102	M.RESISTOR CH 1/10W 1K	1	
R85,86		ERJ6GEYJ331	M.RESISTOR CH 1/10W 330	2	

Ref.No.		Part No.	Part Name & Description	Pcs	Remarks
R87		ERJ6GEYJ152	M.RESISTOR CH 1/10W 1.5K	1	
R88		ERJ6GEYJ102	M.RESISTOR CH 1/10W 1K	1	
R89		ERDS2TJ470	C.RESISTOR 1/4W 47	1	
R90		ERJ6GEYJ680	M.RESISTOR CH 1/10W 68	1	
R91		ERDS2TJ470	C.RESISTOR 1/4W 47	1	
R92		ERJ6GEYJ102	M.RESISTOR CH 1/10W 1K	1	
R93		ERJ6GEYJ152	M.RESISTOR CH 1/10W 1.5K	1	
R94		ERJ6GEYJ102	M.RESISTOR CH 1/10W 1K	1	
R95,96		ERJ6GEYJ331	M.RESISTOR CH 1/10W 330	2	
R97		ERJ6GEYJ152	M.RESISTOR CH 1/10W 1.5K	1	
R98		ERJ6GEYJ102	M.RESISTOR CH 1/10W 1K	1	
R99		ERDS2TJ470	C.RESISTOR 1/4W 47	1	
R100		ERJ6GEYJ680	M.RESISTOR CH 1/10W 68	1	
R101		ERDS2TJ470	C.RESISTOR 1/4W 47	1	
R102		ERJ6GEYJ102	M.RESISTOR CH 1/10W 1K	1	
R103		ERJ6GEYJ152	M.RESISTOR CH 1/10W 1.5K	1	
R104		ERJ6GEYJ102	M.RESISTOR CH 1/10W 1K	1	
R105,06		ERJ6GEYJ331	M.RESISTOR CH 1/10W 330	2	
R107		ERJ6GEYJ152	M.RESISTOR CH 1/10W 1.5K	1	
R108		ERJ6GEYJ102	M.RESISTOR CH 1/10W 1K	1	
R109		ERDS2TJ470	C.RESISTOR 1/4W 47	1	
R110		ERJ6GEYJ680	M.RESISTOR CH 1/10W 68	1	
R111		ERDS2TJ470	C.RESISTOR 1/4W 47	1	
R112		ERJ6GEYJ102	M.RESISTOR CH 1/10W 1K	1	
R113		ERJ6GEYJ152	M.RESISTOR CH 1/10W 1.5K	1	
R114		ERJ6GEYJ102	M.RESISTOR CH 1/10W 1K	1	
R115,16		ERJ6GEYJ331	M.RESISTOR CH 1/10W 330	2	
R117		ERJ6GEYJ332	M.RESISTOR CH 1/10W 3.3K	1	
R118		ERJ6GEYJ103	M.RESISTOR CH 1/10W 10K	1	
R119		ERJ6GEYJ182	M.RESISTOR CH 1/10W 1.8K	1	
R120		ERJ6GEYJ472	M.RESISTOR CH 1/10W 4.7K	1	
R121		ERJ8GCJ820	M.RESISTOR CH 1/8W 82	1	
R122,23		ERJ6GEYJ821	M.RESISTOR CH 1/10W 820	2	
R124,25		ERJ6GEYJ332	M.RESISTOR CH 1/10W 3.3K	2	
R126		ERJ6GEYJ103	M.RESISTOR CH 1/10W 10K	1	
R127		ERJ6GEYJ101	M.RESISTOR CH 1/10W 100	1	
R128		ERJ6GEYJ103	M.RESISTOR CH 1/10W 10K	1	
R129		ERJ6GEYJ182	M.RESISTOR CH 1/10W 1.8K	1	
R130		ERJ6GEYJ472	M.RESISTOR CH 1/10W 4.7K	1	
R131		ERJ8GCJ820	M.RESISTOR CH 1/8W 82	1	
R132,33		ERJ6GEYJ821	M.RESISTOR CH 1/10W 820	2	
R134,35		ERJ6GEYJ332	M.RESISTOR CH 1/10W 3.3K	2	
R136		ERJ6GEYJ103	M.RESISTOR CH 1/10W 10K	1	
R137		ERJ6GEYJ101	M.RESISTOR CH 1/10W 100	1	
R138		ERJ6GEYJ103	M.RESISTOR CH 1/10W 10K	1	
R201		ERJ6GEYJ472	M.RESISTOR CH 1/10W 4.7K	1	
R202		ERJ6GEYJ470	M.RESISTOR CH 1/10W 47	1	
R203		ERJ6GEYJ222	M.RESISTOR CH 1/10W 2.2K	1	
R204		ERJ6GEYJ333	M.RESISTOR CH 1/10W 33K	1	
R205		ERJ6GEYJ472	M.RESISTOR CH 1/10W 4.7K	1	
R206-08		ERJ6GEYJ152	M.RESISTOR CH 1/10W 1.5K	3	
R209		ERJ6GEYJ680	M.RESISTOR CH 1/10W 68	1	
R210		ERJ6GEYJ272	M.RESISTOR CH 1/10W 2.7K	1	
R211		ERJ6GEYJ102	M.RESISTOR CH 1/10W 1K	1	
R212		ERJ6GEYJ470	M.RESISTOR CH 1/10W 47	1	
R213		ERJ6GEYJ103	M.RESISTOR CH 1/10W 10K	1	
R214		ERJ6GEYJ470	M.RESISTOR CH 1/10W 47	1	
R215		ERJ6GEYJ103	M.RESISTOR CH 1/10W 10K	1	
R216		ERJ6GEYJ181	M.RESISTOR CH 1/10W 180	1	
R217		ERJ6GEYJ470	M.RESISTOR CH 1/10W 47	1	
R218		ERJ6GEYJ471	M.RESISTOR CH 1/10W 470	1	
R219		ERJ6GEYJ472	M.RESISTOR CH 1/10W 4.7K	1	
R220		ERJ6GEYJ470	M.RESISTOR CH 1/10W 47	1	
R221		ERJ6GEYJ222	M.RESISTOR CH 1/10W 2.2K	1	
R222		ERJ6GEYJ333	M.RESISTOR CH 1/10W 33K	1	
R223		ERJ6GEYJ472	M.RESISTOR CH 1/10W 4.7K	1	
R224-26		ERJ6GEYJ152	M.RESISTOR CH 1/10W 1.5K	3	
R227		ERJ6GEYJ680	M.RESISTOR CH 1/10W 68	1	
R228		ERJ6GEYJ272	M.RESISTOR CH 1/10W 2.7K	1	
R229		ERJ6GEYJ102	M.RESISTOR CH 1/10W 1K	1	
R230		ERJ6GEYJ470	M.RESISTOR CH 1/10W 47	1	
R231		ERJ6GEYJ103	M.RESISTOR CH 1/10W 10K	1	
R232		ERJ6GEYJ470	M.RESISTOR CH 1/10W 47	1	
R233		ERJ6GEYJ103	M.RESISTOR CH 1/10W 10K	1	
R234		ERJ6GEYJ181	M.RESISTOR CH 1/10W 180	1	

Refer to the P.C.BOARDS LIST, page 6-1-1, before using this page.

Ref.No.		Part No.	Part Name & Description	Pcs	Remarks
R235		ERJ6GEYJ470	M.RESISTOR CH 1/10W 47	1	
R236		ERJ6GEYJ471	M.RESISTOR CH 1/10W 470	1	
R237		ERJ6GEYJ332	M.RESISTOR CH 1/10W 3.3K	1	
R238		ERJ6GEYJ470	M.RESISTOR CH 1/10W 47	1	
R239		ERJ6GEYJ222	M.RESISTOR CH 1/10W 2.2K	1	
R240		ERJ6GEYJ223	M.RESISTOR CH 1/10W 22K	1	
R241		ERJ6GEYJ472	M.RESISTOR CH 1/10W 4.7K	1	
R242-44		ERJ6GEYJ152	M.RESISTOR CH 1/10W 1.5K	3	
R245		ERJ6GEYJ680	M.RESISTOR CH 1/10W 68	1	
R246		ERJ6GEYJ272	M.RESISTOR CH 1/10W 2.7K	1	
R247		ERJ6GEYJ102	M.RESISTOR CH 1/10W 1K	1	
R248		ERJ6GEYJ470	M.RESISTOR CH 1/10W 47	1	
R249		ERJ6GEYJ103	M.RESISTOR CH 1/10W 10K	1	
R250		ERJ6GEYJ470	M.RESISTOR CH 1/10W 47	1	
R251		ERJ6GEYJ103	M.RESISTOR CH 1/10W 10K	1	
R252		ERJ6GEYJ151	M.RESISTOR CH 1/10W 150	1	
R253		ERJ6GEYJ470	M.RESISTOR CH 1/10W 47	1	
R254		ERJ6GEYJ471	M.RESISTOR CH 1/10W 470	1	
R255		ERJ6GEYJ332	M.RESISTOR CH 1/10W 3.3K	1	
R256		ERJ6GEYJ470	M.RESISTOR CH 1/10W 47	1	
R257		ERJ6GEYJ222	M.RESISTOR CH 1/10W 2.2K	1	
R258		ERJ6GEYJ223	M.RESISTOR CH 1/10W 22K	1	
R259		ERJ6GEYJ472	M.RESISTOR CH 1/10W 4.7K	1	
R260-62		ERJ6GEYJ152	M.RESISTOR CH 1/10W 1.5K	3	
R263		ERJ6GEYJ680	M.RESISTOR CH 1/10W 68	1	
R264		ERJ6GEYJ272	M.RESISTOR CH 1/10W 2.7K	1	
R265		ERJ6GEYJ102	M.RESISTOR CH 1/10W 1K	1	
R266		ERJ6GEYJ470	M.RESISTOR CH 1/10W 47	1	
R267		ERJ6GEYJ103	M.RESISTOR CH 1/10W 10K	1	
R268		ERJ6GEYJ470	M.RESISTOR CH 1/10W 47	1	
R269		ERJ6GEYJ103	M.RESISTOR CH 1/10W 10K	1	
R270		ERJ6GEYJ151	M.RESISTOR CH 1/10W 150	1	
R271		ERJ6GEYJ470	M.RESISTOR CH 1/10W 47	1	
R272		ERJ6GEYJ471	M.RESISTOR CH 1/10W 470	1	
R273,74		ERJ6GEYJ392	M.RESISTOR CH 1/10W 3.9K	2	
R275		ERJ6GEYJ222	M.RESISTOR CH 1/10W 2.2K	1	
R276,77		ERDS2TJ102	C.RESISTOR 1/4W 1K	2	
R278-81		ERJ6GEYJ470	M.RESISTOR CH 1/10W 47	4	
RY1-Y4		VSY2039	RELAY	4	
T1-T6		EIR7QE018B	TRANSFORMER	6	
T201,02		VLT0535	TRANSFORMER	2	
T203,04		VLT0536	TRANSFORMER	2	
TP1-P8		VJR0582	PACK PIN	8	
TP201-04		VJR0582	PACK PIN	4	
TPG1-G3		VJR0582	PACK PIN	3	
VC1-C4		VCV0031	TRIMMER	4	
VR3-R6		VRV0064B102		4	
			MISCELLANEOUS		
		VJF0004	HOLDER	2	
		VMP0972	P.C.B. HOLDER ANGLE	1	
		VSC2340	SHIELD CASE	1	
		VSC2341	SHIELD CASE	1	
		VSC2342	SHIELD CASE	1	
		XTV3+6F	SCREW	2	

Ref.No.		Part No.	Part Name & Description	Pcs	Remarks
	■	VEP85015B	P.C.BOARD W/COMPONENT		FOR AU-62-P
			RA & HA		
			CAPACITORS		
C201		ECUM1H103KBN	C.CAPACITOR CH 50V 0.01U	1	
C202		ECEA1EU100	E.CAPACITOR 25V 10U	1	
C203		ECUM1H103KBN	C.CAPACITOR CH 50V 0.01U	1	
C204		ECSF0JE106	T.CAPACITOR 6.3V 10U	1	
C205		ECUM1H103KBN	C.CAPACITOR CH 50V 0.01U	1	
C206		ECUM1E104ZFN	C.CAPACITOR CH 25V 0.1U	1	
C207		ECEA1CU470	E.CAPACITOR 16V 47U	1	
C208,09		ECUM1H103KBN	C.CAPACITOR CH 50V 0.01U	2	
C210		ECEA1EU100	E.CAPACITOR 25V 10U	1	
C211		ECUM1H103KBN	C.CAPACITOR CH 50V 0.01U	1	
C212		ECSF0JE106	T.CAPACITOR 6.3V 10U	1	
C213		ECUM1H103KBN	C.CAPACITOR CH 50V 0.01U	1	
C214		ECUM1E104ZFN	C.CAPACITOR CH 25V 0.1U	1	
C215		ECEA1CU470	E.CAPACITOR 16V 47U	1	
C216,17		ECUM1H103KBN	C.CAPACITOR CH 50V 0.01U	2	
C218		ECEA1EU100	E.CAPACITOR 25V 10U	1	
C219		ECUM1H103KBN	C.CAPACITOR CH 50V 0.01U	1	
C220		ECSF0JE106	T.CAPACITOR 6.3V 10U	1	
C221		ECUM1H103KBN	C.CAPACITOR CH 50V 0.01U	1	
C222		ECUM1E104ZFN	C.CAPACITOR CH 25V 0.1U	1	
C223		ECEA1CU470	E.CAPACITOR 16V 47U	1	
C224,25		ECUM1H103KBN	C.CAPACITOR CH 50V 0.01U	2	
C226		ECEA1EU100	E.CAPACITOR 25V 10U	1	
C227		ECUM1H103KBN	C.CAPACITOR CH 50V 0.01U	1	
C228		ECSF0JE106	T.CAPACITOR 6.3V 10U	1	
C229		ECUM1H103KBN	C.CAPACITOR CH 50V 0.01U	1	
C230		ECUM1E104ZFN	C.CAPACITOR CH 25V 0.1U	1	
C231		ECEA1CU470	E.CAPACITOR 16V 47U	1	
C232		ECUM1H103KBN	C.CAPACITOR CH 50V 0.01U	1	
C233,34		ECEA1CU470	E.CAPACITOR 16V 47U	2	
C235,36		ECUM1E104ZFN	C.CAPACITOR CH 25V 0.1U	2	
CN81		VJP1511T	CONNECTOR(MALE)	1	
CN83		VJP1233T	CONNECTOR(MALE) 6P	1	
CN84		VJP1233G	CONNECTOR(MALE) 6P	1	
CN85		VJP1233T	CONNECTOR(MALE) 6P	1	
CN86		VJP1233G	CONNECTOR(MALE) 6P	1	
D201		MA151K	DIODE	1	
IC201-04		NJM592M8	IC	4	
IC205		AN78N09	IC	1	
L201-05		VLQEL05F101K	COIL 100UH	5	
Q201		2SC3757	TRANSISTOR	1	(Q,R)
Q202,03		2SK316	TRANSISTOR	2	(Q)
Q204,05		2SC3757	TRANSISTOR	2	(Q,R)
Q206,07		2SK316	TRANSISTOR	2	(Q)
Q208,09		2SC3757	TRANSISTOR	2	(Q,R)
Q210,11		2SK316	TRANSISTOR	2	(Q)
Q212,13		2SC3757	TRANSISTOR	2	(Q,R)
Q214,15		2SK316	TRANSISTOR	2	(Q)

Refer to the P.C.BOARDS LIST, page 6-1-1, before using this page.

Ref.No.		Part No.	Part Name & Description	Pcs	Remarks
Q216		2SC3757	TRANSISTOR	1	(Q,R)
Q217		2SD602	TRANSISTOR CHIP	1	(Q,R,S)
Q218		UN2213	TRANSISTOR-RESISTOR	1	
Q219		2SB643	TRANSISTOR	1	
Q220,21		2SD602	TRANSISTOR CHIP	2	(Q,R,S)
Q222-25		2SC3757	TRANSISTOR	4	(Q,R)
			RESISTORS		
R201		ERJ6GEYJ472	M.RESISTOR CH 1/10W 4.7K	1	
R202		ERJ6GEYJ470	M.RESISTOR CH 1/10W 47	1	
R203		ERJ6GEYJ222	M.RESISTOR CH 1/10W 2.2K	1	
R204		ERJ6GEYJ333	M.RESISTOR CH 1/10W 33K	1	
R205		ERJ6GEYJ472	M.RESISTOR CH 1/10W 4.7K	1	
R206-08		ERJ6GEYJ152	M.RESISTOR CH 1/10W 1.5K	3	
R209		ERJ6GEYJ680	M.RESISTOR CH 1/10W 68	1	
R210		ERJ6GEYJ272	M.RESISTOR CH 1/10W 2.7K	1	
R211		ERJ6GEYJ102	M.RESISTOR CH 1/10W 1K	1	
R212		ERJ6GEYJ470	M.RESISTOR CH 1/10W 47	1	
R213		ERJ6GEYJ103	M.RESISTOR CH 1/10W 10K	1	
R214		ERJ6GEYJ470	M.RESISTOR CH 1/10W 47	1	
R215		ERJ6GEYJ103	M.RESISTOR CH 1/10W 10K	1	
R216		ERJ6GEYJ181	M.RESISTOR CH 1/10W 180	1	
R217		ERJ6GEYJ470	M.RESISTOR CH 1/10W 47	1	
R218		ERJ6GEYJ471	M.RESISTOR CH 1/10W 470	1	
R219		ERJ6GEYJ472	M.RESISTOR CH 1/10W 4.7K	1	
R220		ERJ6GEYJ470	M.RESISTOR CH 1/10W 47	1	
R221		ERJ6GEYJ222	M.RESISTOR CH 1/10W 2.2K	1	
R222		ERJ6GEYJ333	M.RESISTOR CH 1/10W 33K	1	
R223		ERJ6GEYJ472	M.RESISTOR CH 1/10W 4.7K	1	
R224-26		ERJ6GEYJ152	M.RESISTOR CH 1/10W 1.5K	3	
R227		ERJ6GEYJ680	M.RESISTOR CH 1/10W 68	1	
R228		ERJ6GEYJ272	M.RESISTOR CH 1/10W 2.7K	1	
R229		ERJ6GEYJ102	M.RESISTOR CH 1/10W 1K	1	
R230		ERJ6GEYJ470	M.RESISTOR CH 1/10W 47	1	
R231		ERJ6GEYJ103	M.RESISTOR CH 1/10W 10K	1	
R232		ERJ6GEYJ470	M.RESISTOR CH 1/10W 47	1	
R233		ERJ6GEYJ103	M.RESISTOR CH 1/10W 10K	1	
R234		ERJ6GEYJ181	M.RESISTOR CH 1/10W 180	1	
R235		ERJ6GEYJ470	M.RESISTOR CH 1/10W 47	1	
R236		ERJ6GEYJ471	M.RESISTOR CH 1/10W 470	1	
R237		ERJ6GEYJ332	M.RESISTOR CH 1/10W 3.3K	1	
R238		ERJ6GEYJ470	M.RESISTOR CH 1/10W 47	1	
R239		ERJ6GEYJ222	M.RESISTOR CH 1/10W 2.2K	1	
R240		ERJ6GEYJ223	M.RESISTOR CH 1/10W 22K	1	
R241		ERJ6GEYJ472	M.RESISTOR CH 1/10W 4.7K	1	
R242-44		ERJ6GEYJ152	M.RESISTOR CH 1/10W 1.5K	3	
R245		ERJ6GEYJ680	M.RESISTOR CH 1/10W 68	1	
R246		ERJ6GEYJ272	M.RESISTOR CH 1/10W 2.7K	1	
R247		ERJ6GEYJ102	M.RESISTOR CH 1/10W 1K	1	
R248		ERJ6GEYJ470	M.RESISTOR CH 1/10W 47	1	
R249		ERJ6GEYJ103	M.RESISTOR CH 1/10W 10K	1	
R250		ERJ6GEYJ470	M.RESISTOR CH 1/10W 47	1	
R251		ERJ6GEYJ103	M.RESISTOR CH 1/10W 10K	1	
R252		ERJ6GEYJ151	M.RESISTOR CH 1/10W 150	1	
R253		ERJ6GEYJ470	M.RESISTOR CH 1/10W 47	1	
R254		ERJ6GEYJ471	M.RESISTOR CH 1/10W 470	1	
R255		ERJ6GEYJ332	M.RESISTOR CH 1/10W 3.3K	1	
R256		ERJ6GEYJ470	M.RESISTOR CH 1/10W 47	1	
R257		ERJ6GEYJ222	M.RESISTOR CH 1/10W 2.2K	1	
R258		ERJ6GEYJ223	M.RESISTOR CH 1/10W 22K	1	
R259		ERJ6GEYJ472	M.RESISTOR CH 1/10W 4.7K	1	
R260-62		ERJ6GEYJ152	M.RESISTOR CH 1/10W 1.5K	3	
R263		ERJ6GEYJ680	M.RESISTOR CH 1/10W 68	1	
R264		ERJ6GEYJ272	M.RESISTOR CH 1/10W 2.7K	1	
R265		ERJ6GEYJ102	M.RESISTOR CH 1/10W 1K	1	
R266		ERJ6GEYJ470	M.RESISTOR CH 1/10W 47	1	
R267		ERJ6GEYJ103	M.RESISTOR CH 1/10W 10K	1	
R268		ERJ6GEYJ470	M.RESISTOR CH 1/10W 47	1	
R269		ERJ6GEYJ103	M.RESISTOR CH 1/10W 10K	1	
R270		ERJ6GEYJ151	M.RESISTOR CH 1/10W 150	1	
R271		ERJ6GEYJ470	M.RESISTOR CH 1/10W 47	1	
R272		ERJ6GEYJ471	M.RESISTOR CH 1/10W 470	1	
R273,74		ERJ6GEYJ392	M.RESISTOR CH 1/10W 3.9K	2	

Ref.No.		Part No.	Part Name & Description	Pcs	Remarks
R275		ERJ6GEYJ222	M.RESISTOR CH 1/10W 2.2K	1	
R276,77		ERDS2TJ102	C.RESISTOR 1/4W 1K	2	
R278-81		ERJ6GEYJ470	M.RESISTOR CH 1/10W 47	4	
RY1-Y4		VSY2039	RELAY	4	
T201,02		VLT0535	TRANSFORMER	2	
T203,04		VLT0536	TRANSFORMER	2	
TP201-04		VJR0582	PACK PIN	4	
			MISCELLANEOUS		
		VJF0004	HOLDER	2	
		VMP0972	P.C.BOARD W/COMPONENT	1	
		VSC2340	SHIELD CASE	1	
		VSC2341	SHIELD CASE	1	
		VSC2342	SHIELD CASE	1	
		XTV3+6F	SCREW	2	
	■	VEP85015C	P.C.BOARD W/COMPONENT		FOR AU-63-P
			RA & HA		
			CAPACITORS		
C201		ECUM1H103KBN	C.CAPACITOR CH 50V 0.01U	1	
C202		ECEA1EU100	E.CAPACITOR 25V 10U	1	
C203		ECUM1H103KBN	C.CAPACITOR CH 50V 0.01U	1	
C204		ECSF0JE106	T.CAPACITOR 6.3V 10U	1	
C205		ECUM1H103KBN	C.CAPACITOR CH 50V 0.01U	1	
C206		ECUM1E104ZFN	C.CAPACITOR CH 25V 0.1U	1	
C207		ECEA1CU470	E.CAPACITOR 16V 47U	1	
C208,09		ECUM1H103KBN	C.CAPACITOR CH 50V 0.01U	2	
C210		ECEA1EU100	E.CAPACITOR 25V 10U	1	
C211		ECUM1H103KBN	C.CAPACITOR CH 50V 0.01U	1	
C212		ECSF0JE106	T.CAPACITOR 6.3V 10U	1	
C213		ECUM1H103KBN	C.CAPACITOR CH 50V 0.01U	1	
C214		ECUM1E104ZFN	C.CAPACITOR CH 25V 0.1U	1	
C215		ECEA1CU470	E.CAPACITOR 16V 47U	1	
C216,17		ECUM1H103KBN	C.CAPACITOR CH 50V 0.01U	2	
C218		ECEA1EU100	E.CAPACITOR 25V 10U	1	
C219		ECUM1H103KBN	C.CAPACITOR CH 50V 0.01U	1	
C220		ECSF0JE106	T.CAPACITOR 6.3V 10U	1	
C221		ECUM1H103KBN	C.CAPACITOR CH 50V 0.01U	1	
C222		ECUM1E104ZFN	C.CAPACITOR CH 25V 0.1U	1	
C223		ECEA1CU470	E.CAPACITOR 16V 47U	1	
C224,25		ECUM1H103KBN	C.CAPACITOR CH 50V 0.01U	2	
C226		ECEA1EU100	E.CAPACITOR 25V 10U	1	
C227		ECUM1H103KBN	C.CAPACITOR CH 50V 0.01U	1	
C228		ECSF0JE106	T.CAPACITOR 6.3V 10U	1	
C229		ECUM1H103KBN	C.CAPACITOR CH 50V 0.01U	1	
C230		ECUM1E104ZFN	C.CAPACITOR CH 25V 0.1U	1	
C231		ECEA1CU470	E.CAPACITOR 16V 47U	1	
C232		ECUM1H103KBN	C.CAPACITOR CH 50V 0.01U	1	
C233,34		ECEA1CU470	E.CAPACITOR 16V 47U	2	
C235,36		ECUM1E104ZFN	C.CAPACITOR CH 25V 0.1U	2	

Refer to the P.C.BOARDS LIST, page 6-1-1, before using this page.

Ref.No.		Part No.	Part Name & Description	Pcs	Remarks
CN81		VJP1511T	CONNECTOR(MALE)	1	
CN83		VJP1233T	CONNECTOR(MALE) 6P	1	
CN84		VJP1233G	CONNECTOR(MALE) 6P	1	
CN85		VJP1233T	CONNECTOR(MALE) 6P	1	
CN86		VJP1233G	CONNECTOR(MALE) 6P	1	
D201		MA151K	DIODE	1	
IC201-04		NJM592M8	IC	4	
IC205		AN78N09	IC	1	
L201-05		VLQEL05F101K	COIL 100UH	5	
Q201		2SC3757	TRANSISTOR	1	(Q,R)
Q202,03		2SK316	TRANSISTOR	2	(Q)
Q204,05		2SC3757	TRANSISTOR	2	(Q,R)
Q206,07		2SK316	TRANSISTOR	2	(Q)
Q208,09		2SC3757	TRANSISTOR	2	(Q,R)
Q210,11		2SK316	TRANSISTOR	2	(Q)
Q212,13		2SC3757	TRANSISTOR	2	(Q,R)
Q214,15		2SK316	TRANSISTOR	2	(Q)
Q216		2SC3757	TRANSISTOR	1	(Q,R)
Q217		2SD602	TRANSISTOR CHIP	1	(Q,R,S)
Q218		UN2213	TRANSISTOR-RESISTOR	1	
Q219		2SB643	TRANSISTOR	1	
Q220,21		2SD602	TRANSISTOR CHIP	2	(Q,R,S)
Q222-25		2SC3757	TRANSISTOR	4	(Q,R)
			RESISTORS		
R201		ERJ6GEYJ472	M.RESISTOR CH 1/10W 4.7K	1	
R202		ERJ6GEYJ470	M.RESISTOR CH 1/10W 47	1	
R203		ERJ6GEYJ222	M.RESISTOR CH 1/10W 2.2K	1	
R204		ERJ6GEYJ333	M.RESISTOR CH 1/10W 33K	1	
R205		ERJ6GEYJ472	M.RESISTOR CH 1/10W 4.7K	1	
R206-08		ERJ6GEYJ152	M.RESISTOR CH 1/10W 1.5K	3	
R209		ERJ6GEYJ680	M.RESISTOR CH 1/10W 68	1	
R210		ERJ6GEYJ272	M.RESISTOR CH 1/10W 2.7K	1	
R211		ERJ6GEYJ102	M.RESISTOR CH 1/10W 1K	1	
R212		ERJ6GEYJ470	M.RESISTOR CH 1/10W 47	1	
R213		ERJ6GEYJ103	M.RESISTOR CH 1/10W 10K	1	
R214		ERJ6GEYJ470	M.RESISTOR CH 1/10W 47	1	
R215		ERJ6GEYJ103	M.RESISTOR CH 1/10W 10K	1	
R216		ERJ6GEYJ151	M.RESISTOR CH 1/10W 150	1	
R217		ERJ6GEYJ470	M.RESISTOR CH 1/10W 47	1	
R218		ERJ6GEYJ471	M.RESISTOR CH 1/10W 470	1	
R219		ERJ6GEYJ472	M.RESISTOR CH 1/10W 4.7K	1	
R220		ERJ6GEYJ470	M.RESISTOR CH 1/10W 47	1	
R221		ERJ6GEYJ222	M.RESISTOR CH 1/10W 2.2K	1	
R222		ERJ6GEYJ333	M.RESISTOR CH 1/10W 33K	1	
R223		ERJ6GEYJ472	M.RESISTOR CH 1/10W 4.7K	1	
R224-26		ERJ6GEYJ152	M.RESISTOR CH 1/10W 1.5K	3	
R227		ERJ6GEYJ680	M.RESISTOR CH 1/10W 68	1	
R228		ERJ6GEYJ272	M.RESISTOR CH 1/10W 2.7K	1	
R229		ERJ6GEYJ102	M.RESISTOR CH 1/10W 1K	1	
R230		ERJ6GEYJ470	M.RESISTOR CH 1/10W 47	1	
R231		ERJ6GEYJ103	M.RESISTOR CH 1/10W 10K	1	
R232		ERJ6GEYJ470	M.RESISTOR CH 1/10W 47	1	
R233		ERJ6GEYJ103	M.RESISTOR CH 1/10W 10K	1	
R234		ERJ6GEYJ151	M.RESISTOR CH 1/10W 150	1	
R235		ERJ6GEYJ470	M.RESISTOR CH 1/10W 47	1	
R236		ERJ6GEYJ471	M.RESISTOR CH 1/10W 470	1	
R237		ERJ6GEYJ332	M.RESISTOR CH 1/10W 3.3K	1	
R238		ERJ6GEYJ470	M.RESISTOR CH 1/10W 47	1	
R239		ERJ6GEYJ222	M.RESISTOR CH 1/10W 2.2K	1	
R240		ERJ6GEYJ223	M.RESISTOR CH 1/10W 22K	1	

Ref.No.		Part No.	Part Name & Description	Pcs	Remarks
R241		ERJ6GEYJ472	M.RESISTOR CH 1/10W 4.7K	1	
R242-44		ERJ6GEYJ152	M.RESISTOR CH 1/10W 1.5K	3	
R245		ERJ6GEYJ680	M.RESISTOR CH 1/10W 68	1	
R246		ERJ6GEYJ272	M.RESISTOR CH 1/10W 2.7K	1	
R247		ERJ6GEYJ102	M.RESISTOR CH 1/10W 1K	1	
R248		ERJ6GEYJ470	M.RESISTOR CH 1/10W 47	1	
R249		ERJ6GEYJ103	M.RESISTOR CH 1/10W 10K	1	
R250		ERJ6GEYJ470	M.RESISTOR CH 1/10W 47	1	
R251		ERJ6GEYJ103	M.RESISTOR CH 1/10W 10K	1	
R252		ERJ6GEYJ121	M.RESISTOR CH1/10W 120	1	
R253		ERJ6GEYJ470	M.RESISTOR CH 1/10W 47	1	
R254		ERJ6GEYJ471	M.RESISTOR CH 1/10W 470	1	
R255		ERJ6GEYJ332	M.RESISTOR CH 1/10W 3.3K	1	
R256		ERJ6GEYJ470	M.RESISTOR CH 1/10W 47	1	
R257		ERJ6GEYJ222	M.RESISTOR CH 1/10W 2.2K	1	
R258		ERJ6GEYJ223	M.RESISTOR CH 1/10W 22K	1	
R259		ERJ6GEYJ472	M.RESISTOR CH 1/10W 4.7K	1	
R260-62		ERJ6GEYJ152	M.RESISTOR CH 1/10W 1.5K	3	
R263		ERJ6GEYJ680	M.RESISTOR CH 1/10W 68	1	
R264		ERJ6GEYJ272	M.RESISTOR CH 1/10W 2.7K	1	
R265		ERJ6GEYJ102	M.RESISTOR CH 1/10W 1K	1	
R266		ERJ6GEYJ470	M.RESISTOR CH 1/10W 47	1	
R267		ERJ6GEYJ103	M.RESISTOR CH 1/10W 10K	1	
R268		ERJ6GEYJ470	M.RESISTOR CH 1/10W 47	1	
R269		ERJ6GEYJ103	M.RESISTOR CH 1/10W 10K	1	
R270		ERJ6GEYJ121	M.RESISTOR CH1/10W 120	1	
R271		ERJ6GEYJ470	M.RESISTOR CH 1/10W 47	1	
R272		ERJ6GEYJ471	M.RESISTOR CH 1/10W 470	1	
R273,74		ERJ6GEYJ392	M.RESISTOR CH 1/10W 3.9K	2	
R275		ERJ6GEYJ222	M.RESISTOR CH 1/10W 2.2K	1	
R276,77		ERDS2TJ102	C.RESISTOR 1/4W 1K	2	
R278-81		ERJ6GEYJ470	M.RESISTOR CH 1/10W 47	4	
RY1-Y4		VSY2039	RELAY	4	
T201,02		VLT0535	TRANSFORMER	2	
T203,04		VLT0536	TRANSFORMER	2	
TP201-04		VJR0582	PACK PIN	4	
			MISCELLANEOUS		
		VJF0004	HOLDER	2	
		VMP0972	P.C.B. HOLDER ANGLE	1	
		VSC2340	SHIELD CASE	1	
		VSC2341	SHIELD CASE	1	
		VSC2342	SHIELD CASE	1	
		XTV3+6F	SCREW	2	
	■	VEP85015D	P.C.BOARD W/COMPONENT		FOR AU-65-E,B
			RA & HA		
			CAPACITORS		
C1		ECEA1HUR33	E.CAPACITOR 50V 0.33U	1	
C2		ECEA1CU100	E.CAPACITOR 16V 10U	1	
C3		ECUM1H103KBN	C.CAPACITOR CH 50V 0.01U	1	
C4		ECEA1HUR33	E.CAPACITOR 50V 0.33U	1	
C5		ECEA1CU100	E.CAPACITOR 16V 10U	1	

Refer to the P.C.BOARDS LIST, page 6-1-1, before using this page.

Ref.No.		Part No.	Part Name & Description	Pcs	Remarks
C6		ECUM1H103KBN	C.CAPACITOR CH 50V 0.01U	1	
C7		ECEA1AU101	E.CAPACITOR 10V 100U	1	
C17		ECEA1AU101	E.CAPACITOR 10V 100U	1	
C27-30		ECUM1E104ZFN	C.CAPACITOR CH 25V 0.1U	4	
C31-39		ECUM1H103KBN	C.CAPACITOR CH 50V 0.01U	9	
C40		ECUM1E104ZFN	C.CAPACITOR CH 25V 0.1U	1	
C41		ECUM1H103KBN	C.CAPACITOR CH 50V 0.01U	1	
C42		ECUM1E104ZFN	C.CAPACITOR CH 25V 0.1U	1	
C43		ECUM1H103KBN	C.CAPACITOR CH 50V 0.01U	1	
C44		ECUM1E104ZFN	C.CAPACITOR CH 25V 0.1U	1	
C45		ECUM1H103KBN	C.CAPACITOR CH 50V 0.01U	1	
C46,47		ECUM1E104ZFN	C.CAPACITOR CH 25V 0.1U	2	
C48		ECUM1H220JCN	C.CAPACITOR CH 50V 22P	1	
C50		ECUM1E104ZFN	C.CAPACITOR CH 25V 0.1U	1	
C51		ECUM1H220JCN	C.CAPACITOR CH 50V 22P	1	
C53		ECUM1E104ZFN	C.CAPACITOR CH 25V 0.1U	1	
C54		ECUM1H220JCN	C.CAPACITOR CH 50V 22P	1	
C56		ECUM1E104ZFN	C.CAPACITOR CH 25V 0.1U	1	
C57		ECUM1H220JCN	C.CAPACITOR CH 50V 22P	1	
C59		ECUM1H103KBN	C.CAPACITOR CH 50V 0.01U	1	
C60		ECEA1AU101	E.CAPACITOR 10V 100U	1	
C61,62		ECUM1E104ZFN	C.CAPACITOR CH 25V 0.1U	2	
C63		ECUM1H103KBN	C.CAPACITOR CH 50V 0.01U	1	
C64		ECEA1AU101	E.CAPACITOR 10V 100U	1	
C65,66		ECUM1E104ZFN	C.CAPACITOR CH 25V 0.1U	2	
C67		ECUM1H103KBN	C.CAPACITOR CH 50V 0.01U	1	
C68		ECEA1AU101	E.CAPACITOR 10V 100U	1	
C69,70		ECUM1E104ZFN	C.CAPACITOR CH 25V 0.1U	2	
C71		ECUM1H103KBN	C.CAPACITOR CH 50V 0.01U	1	
C72		ECEA1AU101	E.CAPACITOR 10V 100U	1	
C73,74		ECUM1E104ZFN	C.CAPACITOR CH 25V 0.1U	2	
C75-78		ECEA1CU470	E.CAPACITOR 16V 47U	4	
C79		ECUM1H103KBN	C.CAPACITOR CH 50V 0.01U	1	
C80		ECEA1EU470	E.CAPACITOR 25V 47U	1	
C81-86		ECCD2H330JC	C.CAPACITOR 500V 33P	6	
C87		ECEA1EU470	E.CAPACITOR 25V 47U	1	
C88		ECUM1H103KBN	C.CAPACITOR CH 50V 0.01U	1	
C201		ECUM1H103KBN	C.CAPACITOR CH 50V 0.01U	1	
C202		ECEA1EU100	E.CAPACITOR 25V 10U	1	
C203		ECUM1H103KBN	C.CAPACITOR CH 50V 0.01U	1	
C204		ECSF0JE106	T.CAPACITOR 6.3V 10U	1	
C205		ECUM1H103KBN	C.CAPACITOR CH 50V 0.01U	1	
C206		ECUM1E104ZFN	C.CAPACITOR CH 25V 0.1U	1	
C207		ECEA1CU470	E.CAPACITOR 16V 47U	1	
C208,09		ECUM1H103KBN	C.CAPACITOR CH 50V 0.01U	2	
C210		ECEA1EU100	E.CAPACITOR 25V 10U	1	
C211		ECUM1H103KBN	C.CAPACITOR CH 50V 0.01U	1	
C212		ECSF0JE106	T.CAPACITOR 6.3V 10U	1	
C213		ECUM1H103KBN	C.CAPACITOR CH 50V 0.01U	1	
C214		ECUM1E104ZFN	C.CAPACITOR CH 25V 0.1U	1	
C215		ECEA1CU470	E.CAPACITOR 16V 47U	1	
C216,17		ECUM1H103KBN	C.CAPACITOR CH 50V 0.01U	2	
C218		ECEA1EU100	E.CAPACITOR 25V 10U	1	
C219		ECUM1H103KBN	C.CAPACITOR CH 50V 0.01U	1	
C220		ECSF0JE106	T.CAPACITOR 6.3V 10U	1	
C221		ECUM1H103KBN	C.CAPACITOR CH 50V 0.01U	1	
C222		ECUM1E104ZFN	C.CAPACITOR CH 25V 0.1U	1	
C223		ECEA1CU470	E.CAPACITOR 16V 47U	1	
C224,25		ECUM1H103KBN	C.CAPACITOR CH 50V 0.01U	2	
C226		ECEA1EU100	E.CAPACITOR 25V 10U	1	
C227		ECUM1H103KBN	C.CAPACITOR CH 50V 0.01U	1	
C228		ECSF0JE106	T.CAPACITOR 6.3V 10U	1	
C229		ECUM1H103KBN	C.CAPACITOR CH 50V 0.01U	1	
C230		ECUM1E104ZFN	C.CAPACITOR CH 25V 0.1U	1	
C231		ECEA1CU470	E.CAPACITOR 16V 47U	1	
C232		ECUM1H103KBN	C.CAPACITOR CH 50V 0.01U	1	
C233,34		ECEA1CU470	E.CAPACITOR 16V 47U	2	
C235,36		ECUM1E104ZFN	C.CAPACITOR CH 25V 0.1U	2	
CN81		VJP1511T	CONNECTOR(MALE)	1	
CN82		VJP1233R	CONNECTOR(MALE) 6P	1	
CN83		VJP1233T	CONNECTOR(MALE) 6P	1	
CN84		VJP1233G	CONNECTOR(MALE) 6P	1	

Ref.No.		Part No.	Part Name & Description	Pcs	Remarks
CN85		VJP1233T	CONNECTOR(MALE) 6P	1	
CN86		VJP1233G	CONNECTOR(MALE) 6P	1	
CN87		VJP1233T	CONNECTOR(MALE) 6P	1	
D201		MA151K	DIODE	1	
IC1		AN78N05	IC	1	
IC2		AN79N05	IC	1	
IC7-C9		AN6308S	IC	3	
IC10		AN6308S	IC	1	
IC11-14		NJM592M8	IC	4	
IC201-04		NJM592M8	IC	4	
IC205		AN78N09	IC	1	
L1-L6		VLQEL05F101K	COIL 100UH	6	
L7-L9		VLQEL05S470K	COIL 47UH	3	
L10		VLQEL05S470K	COIL 47UH	1	
L11,12		VLQEL05F101K	COIL 100UH	2	
L13,14		VLQ0211M2R7	COIL 2.7UH	2	
L201-05		VLQEL05F101K	COIL 100UH	5	
Q5-Q8		2SC2295	TRANSISTOR CHIP	4	(B,C)
Q9		2SC2851	TRANSISTOR	1	
Q10-16		2SC2851	TRANSISTOR	7	
Q17-23		2SB789	TRANSISTOR	7	(Q,R)
Q201		2SC3757	TRANSISTOR	1	(Q,R)
Q202,03		2SK316	TRANSISTOR	2	(Q)
Q204,05		2SC3757	TRANSISTOR	2	(Q,R)
Q206,07		2SK316	TRANSISTOR	2	(Q)
Q208,09		2SC3757	TRANSISTOR	2	(Q,R)
Q210,11		2SK316	TRANSISTOR	2	(Q)
Q212,13		2SC3757	TRANSISTOR	2	(Q,R)
Q214,15		2SK316	TRANSISTOR	2	(Q)
Q216		2SC3757	TRANSISTOR	1	(Q,R)
Q217		2SD602	TRANSISTOR CHIP	1	(Q,R,S)
Q218		UN2213	TRANSISTOR-RESISTOR	1	
Q219		2SB643	TRANSISTOR	1	
Q220,21		2SD602	TRANSISTOR CHIP	2	(Q,R,S)
Q222-25		2SC3757	TRANSISTOR	4	(Q,R)
			RESISTORS		
R8		ERJ6GEYJ750	M.RESISTOR CH 1/10W 75	1	
R16		ERJ6GEYJ750	M.RESISTOR CH 1/10W 75	1	
R21,22		ERJ6GEYJ470	M.RESISTOR CH 1/10W 47	2	
R27,28		ERJ6GEYJ470	M.RESISTOR CH 1/10W 47	2	
R29		ERJ6GEYJ103	M.RESISTOR CH 1/10W 10K	1	
R30		ERJ6GEYJ122	M.RESISTOR CH 1/10W 1.2K	1	
R31		ERJ6GEYJ103	M.RESISTOR CH 1/10W 10K	1	
R32		ERJ6GEYJ122	M.RESISTOR CH 1/10W 1.2K	1	
R33		ERJ6GEYJ103	M.RESISTOR CH 1/10W 10K	1	
R34		ERJ6GEYJ122	M.RESISTOR CH 1/10W 1.2K	1	
R35		ERJ6GEYJ103	M.RESISTOR CH 1/10W 10K	1	
R36		ERJ6GEYJ122	M.RESISTOR CH 1/10W 1.2K	1	
R37		ERJ6GEYJ222	M.RESISTOR CH 1/10W 2.2K	1	
R38		ERJ6GEYJ471	M.RESISTOR CH 1/10W 470	1	
R39		ERJ6GEYJ151	M.RESISTOR CH 1/10W 150	1	
R40		ERJ6GEYJ471	M.RESISTOR CH 1/10W 470	1	
R41		ERJ6GEYJ101	M.RESISTOR CH 1/10W 100	1	
R42		ERJ6GEYJ331	M.RESISTOR CH 1/10W 330	1	
R43,44		ERJ6GEYJ222	M.RESISTOR CH 1/10W 2.2K	2	
R45,46		ERJ6GEYJ470	M.RESISTOR CH 1/10W 47	2	
R47		ERJ6GEYJ222	M.RESISTOR CH 1/10W 2.2K	1	
R48		ERJ6GEYJ471	M.RESISTOR CH 1/10W 470	1	
R49		ERJ6GEYJ151	M.RESISTOR CH 1/10W 150	1	
R50		ERJ6GEYJ471	M.RESISTOR CH 1/10W 470	1	

Refer to the P.C.BOARDS LIST, page 6-1-1, before using this page.

Ref.No.		Part No.	Part Name & Description	Pcs	Remarks
R51		ERJ6GEYJ101	M.RESISTOR CH 1/10W 100	1	
R52		ERJ6GEYJ331	M.RESISTOR CH 1/10W 330	1	
R53,54		ERJ6GEYJ222	M.RESISTOR CH 1/10W 2.2K	2	
R55,56		ERJ6GEYJ470	M.RESISTOR CH 1/10W 47	2	
R57		ERJ6GEYJ222	M.RESISTOR CH 1/10W 2.2K	1	
R58		ERJ6GEYJ471	M.RESISTOR CH 1/10W 470	1	
R59		ERJ6GEYJ151	M.RESISTOR CH 1/10W 150	1	
R60		ERJ6GEYJ471	M.RESISTOR CH 1/10W 470	1	
R61		ERJ6GEYJ101	M.RESISTOR CH 1/10W 100	1	
R62		ERJ6GEYJ331	M.RESISTOR CH 1/10W 330	1	
R63,64		ERJ6GEYJ222	M.RESISTOR CH 1/10W 2.2K	2	
R65,66		ERJ6GEYJ470	M.RESISTOR CH 1/10W 47	2	
R67		ERJ6GEYJ222	M.RESISTOR CH 1/10W 2.2K	1	
R68		ERJ6GEYJ471	M.RESISTOR CH 1/10W 470	1	
R69		ERJ6GEYJ151	M.RESISTOR CH 1/10W 150	1	
R70		ERJ6GEYJ471	M.RESISTOR CH 1/10W 470	1	
R71		ERJ6GEYJ101	M.RESISTOR CH 1/10W 100	1	
R72		ERJ6GEYJ331	M.RESISTOR CH 1/10W 330	1	
R73,74		ERJ6GEYJ222	M.RESISTOR CH 1/10W 2.2K	2	
R75,76		ERJ6GEYJ470	M.RESISTOR CH 1/10W 47	2	
R77		ERJ6GEYJ152	M.RESISTOR CH 1/10W 1.5K	1	
R78		ERJ6GEYJ102	M.RESISTOR CH 1/10W 1K	1	
R79		ERDS2TJ470	C.RESISTOR 1/4W 47	1	
R80		ERJ6GEYJ680	M.RESISTOR CH 1/10W 68	1	
R81		ERDS2TJ470	C.RESISTOR 1/4W 47	1	
R82		ERJ6GEYJ102	M.RESISTOR CH 1/10W 1K	1	
R83		ERJ6GEYJ152	M.RESISTOR CH 1/10W 1.5K	1	
R84		ERJ6GEYJ102	M.RESISTOR CH 1/10W 1K	1	
R85,86		ERJ6GEYJ331	M.RESISTOR CH 1/10W 330	2	
R87		ERJ6GEYJ152	M.RESISTOR CH 1/10W 1.5K	1	
R88		ERJ6GEYJ102	M.RESISTOR CH 1/10W 1K	1	
R89		ERDS2TJ470	C.RESISTOR 1/4W 47	1	
R90		ERJ6GEYJ680	M.RESISTOR CH 1/10W 68	1	
R91		ERDS2TJ470	C.RESISTOR 1/4W 47	1	
R92		ERJ6GEYJ102	M.RESISTOR CH 1/10W 1K	1	
R93		ERJ6GEYJ152	M.RESISTOR CH 1/10W 1.5K	1	
R94		ERJ6GEYJ102	M.RESISTOR CH 1/10W 1K	1	
R95,96		ERJ6GEYJ331	M.RESISTOR CH 1/10W 330	2	
R97		ERJ6GEYJ152	M.RESISTOR CH 1/10W 1.5K	1	
R98		ERJ6GEYJ102	M.RESISTOR CH 1/10W 1K	1	
R99		ERDS2TJ470	C.RESISTOR 1/4W 47	1	
R100		ERJ6GEYJ680	M.RESISTOR CH 1/10W 68	1	
R101		ERDS2TJ470	C.RESISTOR 1/4W 47	1	
R102		ERJ6GEYJ102	M.RESISTOR CH 1/10W 1K	1	
R103		ERJ6GEYJ152	M.RESISTOR CH 1/10W 1.5K	1	
R104		ERJ6GEYJ102	M.RESISTOR CH 1/10W 1K	1	
R105,06		ERJ6GEYJ331	M.RESISTOR CH 1/10W 330	2	
R107		ERJ6GEYJ152	M.RESISTOR CH 1/10W 1.5K	1	
R108		ERJ6GEYJ102	M.RESISTOR CH 1/10W 1K	1	
R109		ERDS2TJ470	C.RESISTOR 1/4W 47	1	
R110		ERJ6GEYJ680	M.RESISTOR CH 1/10W 68	1	
R111		ERDS2TJ470	C.RESISTOR 1/4W 47	1	
R112		ERJ6GEYJ102	M.RESISTOR CH 1/10W 1K	1	
R113		ERJ6GEYJ152	M.RESISTOR CH 1/10W 1.5K	1	
R114		ERJ6GEYJ102	M.RESISTOR CH 1/10W 1K	1	
R115,16		ERJ6GEYJ331	M.RESISTOR CH 1/10W 330	2	
R117		ERJ6GEYJ332	M.RESISTOR CH 1/10W 3.3K	1	
R118		ERJ6GEYJ103	M.RESISTOR CH 1/10W 10K	1	
R119		ERJ6GEYJ182	M.RESISTOR CH 1/10W 1.8K	1	
R120		ERJ6GEYJ472	M.RESISTOR CH 1/10W 4.7K	1	
R121		ERJ8GCJ820	M.RESISTOR CH 1/8W 82	1	
R122,23		ERJ6GEYJ821	M.RESISTOR CH 1/10W 820	2	
R124,25		ERJ6GEYJ332	M.RESISTOR CH 1/10W 3.3K	2	
R126		ERJ6GEYJ103	M.RESISTOR CH 1/10W 10K	1	
R127		ERJ6GEYJ101	M.RESISTOR CH 1/10W 100	1	
R128		ERJ6GEYJ103	M.RESISTOR CH 1/10W 10K	1	
R129		ERJ6GEYJ182	M.RESISTOR CH 1/10W 1.8K	1	
R130		ERJ6GEYJ472	M.RESISTOR CH 1/10W 4.7K	1	
R131		ERJ8GCJ820	M.RESISTOR CH 1/8W 82	1	
R132,33		ERJ6GEYJ821	M.RESISTOR CH 1/10W 820	2	
R134,35		ERJ6GEYJ332	M.RESISTOR CH 1/10W 3.3K	2	
R136		ERJ6GEYJ103	M.RESISTOR CH 1/10W 10K	1	
R137		ERJ6GEYJ101	M.RESISTOR CH 1/10W 100	1	
R138		ERJ6GEYJ103	M.RESISTOR CH 1/10W 10K	1	
R201		ERJ6GEYJ472	M.RESISTOR CH 1/10W 4.7K	1	

Ref.No.		Part No.	Part Name & Description	Pcs	Remarks
R202		ERJ6GEYJ470	M.RESISTOR CH 1/10W 47	1	
R203		ERJ6GEYJ222	M.RESISTOR CH 1/10W 2.2K	1	
R204		ERJ6GEYJ333	M.RESISTOR CH 1/10W 33K	1	
R205		ERJ6GEYJ472	M.RESISTOR CH 1/10W 4.7K	1	
R206-08		ERJ6GEYJ152	M.RESISTOR CH 1/10W 1.5K	3	
R209		ERJ6GEYJ680	M.RESISTOR CH 1/10W 68	1	
R210		ERJ6GEYJ272	M.RESISTOR CH 1/10W 2.7K	1	
R211		ERJ6GEYJ102	M.RESISTOR CH 1/10W 1K	1	
R212		ERJ6GEYJ470	M.RESISTOR CH 1/10W 47	1	
R213		ERJ6GEYJ103	M.RESISTOR CH 1/10W 10K	1	
R214		ERJ6GEYJ470	M.RESISTOR CH 1/10W 47	1	
R215		ERJ6GEYJ103	M.RESISTOR CH 1/10W 10K	1	
R216		ERJ6GEYJ151	M.RESISTOR CH 1/10W 150	1	
R217		ERJ6GEYJ470	M.RESISTOR CH 1/10W 47	1	
R218		ERJ6GEYJ471	M.RESISTOR CH 1/10W 470	1	
R219		ERJ6GEYJ472	M.RESISTOR CH 1/10W 4.7K	1	
R220		ERJ6GEYJ470	M.RESISTOR CH 1/10W 47	1	
R221		ERJ6GEYJ222	M.RESISTOR CH 1/10W 2.2K	1	
R222		ERJ6GEYJ333	M.RESISTOR CH 1/10W 33K	1	
R223		ERJ6GEYJ472	M.RESISTOR CH 1/10W 4.7K	1	
R224-26		ERJ6GEYJ152	M.RESISTOR CH 1/10W 1.5K	3	
R227		ERJ6GEYJ680	M.RESISTOR CH 1/10W 68	1	
R228		ERJ6GEYJ272	M.RESISTOR CH 1/10W 2.7K	1	
R229		ERJ6GEYJ102	M.RESISTOR CH 1/10W 1K	1	
R230		ERJ6GEYJ470	M.RESISTOR CH 1/10W 47	1	
R231		ERJ6GEYJ103	M.RESISTOR CH 1/10W 10K	1	
R232		ERJ6GEYJ470	M.RESISTOR CH 1/10W 47	1	
R233		ERJ6GEYJ103	M.RESISTOR CH 1/10W 10K	1	
R234		ERJ6GEYJ151	M.RESISTOR CH 1/10W 150	1	
R235		ERJ6GEYJ470	M.RESISTOR CH 1/10W 47	1	
R236		ERJ6GEYJ471	M.RESISTOR CH 1/10W 470	1	
R237		ERJ6GEYJ472	M.RESISTOR CH 1/10W 4.7K	1	
R238		ERJ6GEYJ470	M.RESISTOR CH 1/10W 47	1	
R239		ERJ6GEYJ222	M.RESISTOR CH 1/10W 2.2K	1	
R240		ERJ6GEYJ333	M.RESISTOR CH 1/10W 33K	1	
R241		ERJ6GEYJ472	M.RESISTOR CH 1/10W 4.7K	1	
R242-44		ERJ6GEYJ152	M.RESISTOR CH 1/10W 1.5K	3	
R245		ERJ6GEYJ680	M.RESISTOR CH 1/10W 68	1	
R246		ERJ6GEYJ272	M.RESISTOR CH 1/10W 2.7K	1	
R247		ERJ6GEYJ102	M.RESISTOR CH 1/10W 1K	1	
R248		ERJ6GEYJ470	M.RESISTOR CH 1/10W 47	1	
R249		ERJ6GEYJ103	M.RESISTOR CH 1/10W 10K	1	
R250		ERJ6GEYJ470	M.RESISTOR CH 1/10W 47	1	
R251		ERJ6GEYJ103	M.RESISTOR CH 1/10W 10K	1	
R252		ERJ6GEYJ121	M.RESISTOR CH 1/10W 120	1	
R253		ERJ6GEYJ470	M.RESISTOR CH 1/10W 47	1	
R254		ERJ6GEYJ471	M.RESISTOR CH 1/10W 470	1	
R255		ERJ6GEYJ472	M.RESISTOR CH 1/10W 4.7K	1	
R256		ERJ6GEYJ470	M.RESISTOR CH 1/10W 47	1	
R257		ERJ6GEYJ222	M.RESISTOR CH 1/10W 2.2K	1	
R258		ERJ6GEYJ333	M.RESISTOR CH 1/10W 33K	1	
R259		ERJ6GEYJ472	M.RESISTOR CH 1/10W 4.7K	1	
R260-62		ERJ6GEYJ152	M.RESISTOR CH 1/10W 1.5K	3	
R263		ERJ6GEYJ680	M.RESISTOR CH 1/10W 68	1	
R264		ERJ6GEYJ272	M.RESISTOR CH 1/10W 2.7K	1	
R265		ERJ6GEYJ102	M.RESISTOR CH 1/10W 1K	1	
R266		ERJ6GEYJ470	M.RESISTOR CH 1/10W 47	1	
R267		ERJ6GEYJ103	M.RESISTOR CH 1/10W 10K	1	
R268		ERJ6GEYJ470	M.RESISTOR CH 1/10W 47	1	
R269		ERJ6GEYJ103	M.RESISTOR CH 1/10W 10K	1	
R270		ERJ6GEYJ121	M.RESISTOR CH 1/10W 120	1	
R271		ERJ6GEYJ470	M.RESISTOR CH 1/10W 47	1	
R272		ERJ6GEYJ471	M.RESISTOR CH 1/10W 470	1	
R273,74		ERJ6GEYJ392	M.RESISTOR CH 1/10W 3.9K	2	
R275		ERJ6GEYJ222	M.RESISTOR CH 1/10W 2.2K	1	
R276,77		ERDS2TJ102	C.RESISTOR 1/4W 1K	2	
R278-81		ERJ6GEYJ470	M.RESISTOR CH 1/10W 47	4	
RY1-Y4		VSY2039	RELAY	4	
T1-T6		EIR7QE018B	TRANSFORMER	6	

Refer to the P.C.BOARDS LIST, page 6-1-1, before using this page.

Ref.No.		Part No.	Part Name & Description	Pcs	Remarks
T201,02		VLT0535	TRANSFORMER	2	
T203,04		VLT0536	TRANSFORMER	2	
TP1-P8		VJR0646	TEST POINT	8	
TP201-04		VJR0646	TEST POINT	4	
TPG1-G3		VJR0646	TEST POINT	3	
VC1-C4		VCV0031	TRIMMER	4	
VR3-R6		VRV0064B102	V.RESISTOR 1K	4	
			MISCELLANEOUS		
		VJF0004	CLAMPER	2	
		VMP0972	P.C.B. HOLDER ANGLE	1	
		VSC2340	SHIELD CASE	1	
		VSC2341	SHIELD CASE	1	
		VSC2342	SHIELD CASE	1	
		XTV3+6F	SCREW	2	
	■	VEP85015E	P.C.BOARD W/COMPONENT		FOR AU-62-E,B
			RA & HA		
			CAPACITORS		
C201		ECUM1H103KBN	C.CAPACITOR CH 50V 0.01U	1	
C202		ECEA1EU100	E.CAPACITOR 25V 10U	1	
C203		ECUM1H103KBN	C.CAPACITOR CH 50V 0.01U	1	
C204		ECSF0JE106	T.CAPACITOR 6.3V 10U	1	
C205		ECUM1H103KBN	C.CAPACITOR CH 50V 0.01U	1	
C206		ECUM1E104ZFN	C.CAPACITOR CH 25V 0.1U	1	
C207		ECEA1CU470	E.CAPACITOR 16V 47U	1	
C208,09		ECUM1H103KBN	C.CAPACITOR CH 50V 0.01U	2	
C210		ECEA1EU100	E.CAPACITOR 25V 10U	1	
C211		ECUM1H103KBN	C.CAPACITOR CH 50V 0.01U	1	
C212		ECSF0JE106	T.CAPACITOR 6.3V 10U	1	
C213		ECUM1H103KBN	C.CAPACITOR CH 50V 0.01U	1	
C214		ECUM1E104ZFN	C.CAPACITOR CH 25V 0.1U	1	
C215		ECEA1CU470	E.CAPACITOR 16V 47U	1	
C216,17		ECUM1H103KBN	C.CAPACITOR CH 50V 0.01U	2	
C218		ECEA1EU100	E.CAPACITOR 25V 10U	1	
C219		ECUM1H103KBN	C.CAPACITOR CH 50V 0.01U	1	
C220		ECSF0JE106	T.CAPACITOR 6.3V 10U	1	
C221		ECUM1H103KBN	C.CAPACITOR CH 50V 0.01U	1	
C222		ECUM1E104ZFN	C.CAPACITOR CH 25V 0.1U	1	
C223		ECEA1CU470	E.CAPACITOR 16V 47U	1	
C224,25		ECUM1H103KBN	C.CAPACITOR CH 50V 0.01U	2	
C226		ECEA1EU100	E.CAPACITOR 25V 10U	1	
C227		ECUM1H103KBN	C.CAPACITOR CH 50V 0.01U	1	
C228		ECSF0JE106	T.CAPACITOR 6.3V 10U	1	
C229		ECUM1H103KBN	C.CAPACITOR CH 50V 0.01U	1	
C230		ECUM1E104ZFN	C.CAPACITOR CH 25V 0.1U	1	
C231		ECEA1CU470	E.CAPACITOR 16V 47U	1	
C232		ECUM1H103KBN	C.CAPACITOR CH 50V 0.01U	1	
C233,34		ECEA1CU470	E.CAPACITOR 16V 47U	2	
C235,36		ECUM1E104ZFN	C.CAPACITOR CH 25V 0.1U	2	

Ref.No.		Part No.	Part Name & Description	Pcs	Remarks
CN81		VJP1511T	CONNECTOR(MALE)	1	
CN83		VJP1233T	CONNECTOR(MALE) 6P	1	
CN84		VJP1233G	CONNECTOR(MALE) 6P	1	
CN85		VJP1233T	CONNECTOR(MALE) 6P	1	
CN86		VJP1233G	CONNECTOR(MALE) 6P	1	
D201		MA151K	DIODE	1	
IC201-04		NJM592M8	IC	4	
IC205		AN78N09	IC	1	
L201-05		VLQEL05F101K	COIL 100UH	5	
Q201		2SC3757	TRANSISTOR	1	(Q,R)
Q202,03		2SK316	TRANSISTOR	2	(Q)
Q204,05		2SC3757	TRANSISTOR	2	(Q,R)
Q206,07		2SK316	TRANSISTOR	2	(Q)
Q208,09		2SC3757	TRANSISTOR	2	(Q,R)
Q210,11		2SK316	TRANSISTOR	2	(Q)
Q212,13		2SC3757	TRANSISTOR	2	(Q,R)
Q214,15		2SK316	TRANSISTOR	2	(Q)
Q216		2SC3757	TRANSISTOR	1	(Q,R)
Q217		2SD602	TRANSISTOR CHIP	1	(Q,R,S)
Q218		UN2213	TRANSISTOR-RESISTOR	1	
Q219		2SB643	TRANSISTOR	1	
Q220,21		2SD602	TRANSISTOR CHIP	2	(Q,R,S)
Q222-25		2SC3757	TRANSISTOR	4	(Q,R)
			RESISTORS		
R201		ERJ6GEYJ472	M.RESISTOR CH 1/10W 4.7K	1	
R202		ERJ6GEYJ470	M.RESISTOR CH 1/10W 47	1	
R203		ERJ6GEYJ222	M.RESISTOR CH 1/10W 2.2K	1	
R204		ERJ6GEYJ333	M.RESISTOR CH 1/10W 33K	1	
R205		ERJ6GEYJ472	M.RESISTOR CH 1/10W 4.7K	1	
R206-08		ERJ6GEYJ152	M.RESISTOR CH 1/10W 1.5K	3	
R209		ERJ6GEYJ680	M.RESISTOR CH 1/10W 68	1	
R210		ERJ6GEYJ272	M.RESISTOR CH 1/10W 2.7K	1	
R211		ERJ6GEYJ102	M.RESISTOR CH 1/10W 1K	1	
R212		ERJ6GEYJ470	M.RESISTOR CH 1/10W 47	1	
R213		ERJ6GEYJ103	M.RESISTOR CH 1/10W 10K	1	
R214		ERJ6GEYJ470	M.RESISTOR CH 1/10W 47	1	
R215		ERJ6GEYJ103	M.RESISTOR CH 1/10W 10K	1	
R216		ERJ6GEYJ151	M.RESISTOR CH 1/10W 150	1	
R217		ERJ6GEYJ470	M.RESISTOR CH 1/10W 47	1	
R218		ERJ6GEYJ471	M.RESISTOR CH 1/10W 470	1	
R219		ERJ6GEYJ472	M.RESISTOR CH 1/10W 4.7K	1	
R220		ERJ6GEYJ470	M.RESISTOR CH 1/10W 47	1	
R221		ERJ6GEYJ222	M.RESISTOR CH 1/10W 2.2K	1	
R222		ERJ6GEYJ333	M.RESISTOR CH 1/10W 33K	1	
R223		ERJ6GEYJ472	M.RESISTOR CH 1/10W 4.7K	1	
R224-26		ERJ6GEYJ152	M.RESISTOR CH 1/10W 1.5K	3	
R227		ERJ6GEYJ680	M.RESISTOR CH 1/10W 68	1	
R228		ERJ6GEYJ272	M.RESISTOR CH 1/10W 2.7K	1	
R229		ERJ6GEYJ102	M.RESISTOR CH 1/10W 1K	1	
R230		ERJ6GEYJ470	M.RESISTOR CH 1/10W 47	1	
R231		ERJ6GEYJ103	M.RESISTOR CH 1/10W 10K	1	
R232		ERJ6GEYJ470	M.RESISTOR CH 1/10W 47	1	
R233		ERJ6GEYJ103	M.RESISTOR CH 1/10W 10K	1	
R234		ERJ6GEYJ151	M.RESISTOR CH 1/10W 150	1	
R235		ERJ6GEYJ470	M.RESISTOR CH 1/10W 47	1	
R236		ERJ6GEYJ471	M.RESISTOR CH 1/10W 470	1	
R237		ERJ6GEYJ472	M.RESISTOR CH 1/10W 4.7K	1	
R238		ERJ6GEYJ470	M.RESISTOR CH 1/10W 47	1	
R239		ERJ6GEYJ222	M.RESISTOR CH 1/10W 2.2K	1	
R240		ERJ6GEYJ333	M.RESISTOR CH 1/10W 33K	1	

Refer to the P.C.BOARDS LIST, page 6-1-1, before using this page.

Ref.No.		Part No.	Part Name & Description	Pcs	Remarks
R241		ERJ6GEYJ472	M.RESISTOR CH 1/10W 4.7K	1	
R242-44		ERJ6GEYJ152	M.RESISTOR CH 1/10W 1.5K	3	
R245		ERJ6GEYJ680	M.RESISTOR CH 1/10W 68	1	
R246		ERJ6GEYJ272	M.RESISTOR CH 1/10W 2.7K	1	
R247		ERJ6GEYJ102	M.RESISTOR CH 1/10W 1K	1	
R248		ERJ6GEYJ470	M.RESISTOR CH 1/10W 47	1	
R249		ERJ6GEYJ103	M.RESISTOR CH 1/10W 10K	1	
R250		ERJ6GEYJ470	M.RESISTOR CH 1/10W 47	1	
R251		ERJ6GEYJ103	M.RESISTOR CH 1/10W 10K	1	
R252		ERJ6GEYJ121	M.RESISTOR CH 1/10W 120	1	
R253		ERJ6GEYJ470	M.RESISTOR CH 1/10W 47	1	
R254		ERJ6GEYJ471	M.RESISTOR CH 1/10W 470	1	
R255		ERJ6GEYJ472	M.RESISTOR CH 1/10W 4.7K	1	
R256		ERJ6GEYJ470	M.RESISTOR CH 1/10W 47	1	
R257		ERJ6GEYJ222	M.RESISTOR CH 1/10W 2.2K	1	
R258		ERJ6GEYJ333	M.RESISTOR CH 1/10W 33K	1	
R259		ERJ6GEYJ472	M.RESISTOR CH 1/10W 4.7K	1	
R260-62		ERJ6GEYJ152	M.RESISTOR CH 1/10W 1.5K	3	
R263		ERJ6GEYJ680	M.RESISTOR CH 1/10W 68	1	
R264		ERJ6GEYJ272	M.RESISTOR CH 1/10W 2.7K	1	
R265		ERJ6GEYJ102	M.RESISTOR CH 1/10W 1K	1	
R266		ERJ6GEYJ470	M.RESISTOR CH 1/10W 47	1	
R267		ERJ6GEYJ103	M.RESISTOR CH 1/10W 10K	1	
R268		ERJ6GEYJ470	M.RESISTOR CH 1/10W 47	1	
R269		ERJ6GEYJ103	M.RESISTOR CH 1/10W 10K	1	
R270		ERJ6GEYJ121	M.RESISTOR CH 1/10W 120	1	
R271		ERJ6GEYJ470	M.RESISTOR CH 1/10W 47	1	
R272		ERJ6GEYJ471	M.RESISTOR CH 1/10W 470	1	
R273,74		ERJ6GEYJ392	M.RESISTOR CH 1/10W 3.9K	2	
R275		ERJ6GEYJ222	M.RESISTOR CH 1/10W 2.2K	1	
R276,77		ERDS2TJ102	C.RESISTOR 1/4W 1K	2	
R278-81		ERJ6GEYJ470	M.RESISTOR CH 1/10W 47	4	
RY1-Y4		VSY2039	RELAY	4	
T201,02		VLT0535	TRANSFORMER	2	
T203,04		VLT0536	TRANSFORMER	2	
TP201-04		VJR0646	TEST POINT	4	
			MISCELLANEOUS		
		VJF0004	HOLDER	2	
		VMP0972	P.C.B. HOLDER ANGLE	1	
		VSC2340	SHIELD CASE	1	
		VSC2341	SHIELD CASE	1	
		VSC2342	SHIELD CASE	1	
		XTV3+6F	SCREW	2	
	■	VEP85015F	P.C.BOARD W/COMPONENT		FOR AU-63-E,B
			RA & HA		
			CAPACITORS		
C201		ECUM1H103KBN	C.CAPACITOR CH 50V 0.01U	1	
C202		ECEA1EU100	E.CAPACITOR 25V 10U	1	
C203		ECUM1H103KBN	C.CAPACITOR CH 50V 0.01U	1	
C204		ECSF0JE106	T.CAPACITOR 6.3V 10U	1	
C205		ECUM1H103KBN	C.CAPACITOR CH 50V 0.01U	1	

Ref.No.		Part No.	Part Name & Description	Pcs	Remarks
C206		ECUM1E104ZFN	C.CAPACITOR CH 25V 0.1U	1	
C207		ECEA1CU470	E.CAPACITOR 16V 47U	1	
C208,09		ECUM1H103KBN	C.CAPACITOR CH 50V 0.01U	2	
C210		ECEA1EU100	E.CAPACITOR 25V 10U	1	
C211		ECUM1H103KBN	C.CAPACITOR CH 50V 0.01U	1	
C212		ECSF0JE106	T.CAPACITOR 6.3V 10U	1	
C213		ECUM1H103KBN	C.CAPACITOR CH 50V 0.01U	1	
C214		ECUM1E104ZFN	C.CAPACITOR CH 25V 0.1U	1	
C215		ECEA1CU470	E.CAPACITOR 16V 47U	1	
C216,17		ECUM1H103KBN	C.CAPACITOR CH 50V 0.01U	2	
C218		ECEA1EU100	E.CAPACITOR 25V 10U	1	
C219		ECUM1H103KBN	C.CAPACITOR CH 50V 0.01U	1	
C220		ECSF0JE106	T.CAPACITOR 6.3V 10U	1	
C221		ECUM1H103KBN	C.CAPACITOR CH 50V 0.01U	1	
C222		ECUM1E104ZFN	C.CAPACITOR CH 25V 0.1U	1	
C223		ECEA1CU470	E.CAPACITOR 16V 47U	1	
C224,25		ECUM1H103KBN	C.CAPACITOR CH 50V 0.01U	2	
C226		ECEA1EU100	E.CAPACITOR 25V 10U	1	
C227		ECUM1H103KBN	C.CAPACITOR CH 50V 0.01U	1	
C228		ECSF0JE106	T.CAPACITOR 6.3V 10U	1	
C229		ECUM1H103KBN	C.CAPACITOR CH 50V 0.01U	1	
C230		ECUM1E104ZFN	C.CAPACITOR CH 25V 0.1U	1	
C231		ECEA1CU470	E.CAPACITOR 16V 47U	1	
C232		ECUM1H103KBN	C.CAPACITOR CH 50V 0.01U	1	
C233,34		ECEA1CU470	E.CAPACITOR 16V 47U	2	
C235,36		ECUM1E104ZFN	C.CAPACITOR CH 25V 0.1U	2	
CN81		VJP1511T	CONNECTOR(MALE)	1	
CN83		VJP1233T	CONNECTOR(MALE) 6P	1	
CN84		VJP1233G	CONNECTOR(MALE) 6P	1	
CN85		VJP1233T	CONNECTOR(MALE) 6P	1	
CN86		VJP1233G	CONNECTOR(MALE) 6P	1	
D201		MA151K	DIODE	1	
IC201-04		NJM592M8	IC	4	
IC205		AN78N09	IC	1	
L201-05		VLQEL05F101K	COIL 100UH	5	
Q201		2SC3757	TRANSISTOR	1	(Q,R)
Q202,03		2SK316	TRANSISTOR	2	(Q)
Q204,05		2SC3757	TRANSISTOR	2	(Q,R)
Q206,07		2SK316	TRANSISTOR	2	(Q)
Q208,09		2SC3757	TRANSISTOR	2	(Q,R)
Q210,11		2SK316	TRANSISTOR	2	(Q)
Q212,13		2SC3757	TRANSISTOR	2	(Q,R)
Q214,15		2SK316	TRANSISTOR	2	(Q)
Q216		2SC3757	TRANSISTOR	1	(Q,R)
Q217		2SD602	TRANSISTOR CHIP	1	(Q,R,S)
Q218		UN2213	TRANSISTOR-RESISTOR	1	
Q219		2SB643	TRANSISTOR	1	
Q220,21		2SD602	TRANSISTOR CHIP	2	(Q,R,S)
Q222-25		2SC3757	TRANSISTOR	4	(Q,R)
			RESISTORS		
R201		ERJ6GEYJ472	M.RESISTOR CH 1/10W 4.7K	1	
R202		ERJ6GEYJ470	M.RESISTOR CH 1/10W 47	1	
R203		ERJ6GEYJ222	M.RESISTOR CH 1/10W 2.2K	1	
R204		ERJ6GEYJ333	M.RESISTOR CH 1/10W 33K	1	
R205		ERJ6GEYJ472	M.RESISTOR CH 1/10W 4.7K	1	
R206-08		ERJ6GEYJ152	M.RESISTOR CH 1/10W 1.5K	3	
R209		ERJ6GEYJ680	M.RESISTOR CH 1/10W 68	1	

Refer to the P.C.BOARDS LIST, page 6-1-1, before using this page.

Ref.No.		Part No.	Part Name & Description	Pcs	Remarks
R210		ERJ6GEYJ272	M.RESISTOR CH 1/10W 2.7K	1	
R211		ERJ6GEYJ102	M.RESISTOR CH 1/10W 1K	1	
R212		ERJ6GEYJ470	M.RESISTOR CH 1/10W 47	1	
R213		ERJ6GEYJ103	M.RESISTOR CH 1/10W 10K	1	
R214		ERJ6GEYJ470	M.RESISTOR CH 1/10W 47	1	
R215		ERJ6GEYJ103	M.RESISTOR CH 1/10W 10K	1	
R216		ERJ6GEYJ151	M.RESISTOR CH 1/10W 150	1	
R217		ERJ6GEYJ470	M.RESISTOR CH 1/10W 47	1	
R218		ERJ6GEYJ471	M.RESISTOR CH 1/10W 470	1	
R219		ERJ6GEYJ472	M.RESISTOR CH 1/10W 4.7K	1	
R220		ERJ6GEYJ470	M.RESISTOR CH 1/10W 47	1	
R221		ERJ6GEYJ222	M.RESISTOR CH 1/10W 2.2K	1	
R222		ERJ6GEYJ333	M.RESISTOR CH 1/10W 33K	1	
R223		ERJ6GEYJ472	M.RESISTOR CH 1/10W 4.7K	1	
R224-26		ERJ6GEYJ152	M.RESISTOR CH 1/10W 1.5K	3	
R227		ERJ6GEYJ680	M.RESISTOR CH 1/10W 68	1	
R228		ERJ6GEYJ272	M.RESISTOR CH 1/10W 2.7K	1	
R229		ERJ6GEYJ102	M.RESISTOR CH 1/10W 1K	1	
R230		ERJ6GEYJ470	M.RESISTOR CH 1/10W 47	1	
R231		ERJ6GEYJ103	M.RESISTOR CH 1/10W 10K	1	
R232		ERJ6GEYJ470	M.RESISTOR CH 1/10W 47	1	
R233		ERJ6GEYJ103	M.RESISTOR CH 1/10W 10K	1	
R234		ERJ6GEYJ151	M.RESISTOR CH 1/10W 150	1	
R235		ERJ6GEYJ470	M.RESISTOR CH 1/10W 47	1	
R236		ERJ6GEYJ471	M.RESISTOR CH 1/10W 470	1	
R237		ERJ6GEYJ472	M.RESISTOR CH 1/10W 4.7K	1	
R238		ERJ6GEYJ470	M.RESISTOR CH 1/10W 47	1	
R239		ERJ6GEYJ222	M.RESISTOR CH 1/10W 2.2K	1	
R240		ERJ6GEYJ333	M.RESISTOR CH 1/10W 33K	1	
R241		ERJ6GEYJ472	M.RESISTOR CH 1/10W 4.7K	1	
R242-44		ERJ6GEYJ152	M.RESISTOR CH 1/10W 1.5K	3	
R245		ERJ6GEYJ680	M.RESISTOR CH 1/10W 68	1	
R246		ERJ6GEYJ272	M.RESISTOR CH 1/10W 2.7K	1	
R247		ERJ6GEYJ102	M.RESISTOR CH 1/10W 1K	1	
R248		ERJ6GEYJ470	M.RESISTOR CH 1/10W 47	1	
R249		ERJ6GEYJ103	M.RESISTOR CH 1/10W 10K	1	
R250		ERJ6GEYJ470	M.RESISTOR CH 1/10W 47	1	
R251		ERJ6GEYJ103	M.RESISTOR CH 1/10W 10K	1	
R252		ERJ6GEYJ121	M.RESISTOR CH 1/10W 120	1	
R253		ERJ6GEYJ470	M.RESISTOR CH 1/10W 47	1	
R254		ERJ6GEYJ471	M.RESISTOR CH 1/10W 470	1	
R255		ERJ6GEYJ472	M.RESISTOR CH 1/10W 4.7K	1	
R256		ERJ6GEYJ470	M.RESISTOR CH 1/10W 47	1	
R257		ERJ6GEYJ222	M.RESISTOR CH 1/10W 2.2K	1	
R258		ERJ6GEYJ333	M.RESISTOR CH 1/10W 33K	1	
R259		ERJ6GEYJ472	M.RESISTOR CH 1/10W 4.7K	1	
R260-62		ERJ6GEYJ152	M.RESISTOR CH 1/10W 1.5K	3	
R263		ERJ6GEYJ680	M.RESISTOR CH 1/10W 68	1	
R264		ERJ6GEYJ272	M.RESISTOR CH 1/10W 2.7K	1	
R265		ERJ6GEYJ102	M.RESISTOR CH 1/10W 1K	1	
R266		ERJ6GEYJ470	M.RESISTOR CH 1/10W 47	1	
R267		ERJ6GEYJ103	M.RESISTOR CH 1/10W 10K	1	
R268		ERJ6GEYJ470	M.RESISTOR CH 1/10W 47	1	
R269		ERJ6GEYJ103	M.RESISTOR CH 1/10W 10K	1	
R270		ERJ6GEYJ121	M.RESISTOR CH 1/10W 120	1	
R271		ERJ6GEYJ470	M.RESISTOR CH 1/10W 47	1	
R272		ERJ6GEYJ471	M.RESISTOR CH 1/10W 470	1	
R273,74		ERJ6GEYJ392	M.RESISTOR CH 1/10W 3.9K	2	
R275		ERJ6GEYJ222	M.RESISTOR CH 1/10W 2.2K	1	
R276,77		ERDS2TJ102	C.RESISTOR 1/4W 1K	2	
R278-81		ERJ6GEYJ470	M.RESISTOR CH 1/10W 47	4	
RY1-Y4		VSY2039	RELAY	4	
T201,02		VLT0535	TRANSFORMER	2	
T203,04		VLT0536	TRANSFORMER	2	
TP201-04		VJR0646	TEST POINT	4	

Ref.No.		Part No.	Part Name & Description	Pcs	Remarks
			MISCELLANEOUS		
		VJF0004	COAMPER	2	
		VMP0972	P.C.B. HOLDER ANGLE	1	
		VSC2340	SHIELD CASE	1	
		VSC2341	SHIELD CASE	1	
	■	VEP00E27C	P.C.BOARD W/COMPONENT		
			TR SENSOR (1)		
			MISCELLANEOUS		
		ON1110-R	PHOTO INTERRUPTER	1	
	■	VEP00E28C	P.C.BOARD W/COMPONENT		
			TR SENSOR (2)		
			MISCELLANEOUS		
		ON1110-R	PHOTO INTERRUPTER	1	
	■	VEP00E25C	P.C.BOARD W/COMPONENT		
			UNLOADING PHOTO		
			MISCELLANEOUS		
		ON1110-R	PHOTO INTERRUPTER	1	
	■	VEP83097A	P.C.BOARD W/COMPONENT		FOR AU-65-P
			VIDEO IN/OUT		
			CAPACITORS		
C1		ECUM1H103KBN	C.CAPACITOR CH 50V 0.01U	1	
C2		ECEA1CKG470	E.CAPACITOR 16V 47U	1	
C3		ECUM1H103KBN	C.CAPACITOR CH 50V 0.01U	1	
C4		ECEA1CKG470	E.CAPACITOR 16V 47U	1	
C5-C8		ECUM1H103KBN	C.CAPACITOR CH 50V 0.01U	4	
C101		ECEA1CKG470	E.CAPACITOR 16V 47U	1	
C102		ECUM1H103KBN	C.CAPACITOR CH 50V 0.01U	1	
C103		ECEA1CU101	E.CAPACITOR 16V 100U	1	
C104		ECUM1H103KBN	C.CAPACITOR CH 50V 0.01U	1	
C105		ECUM1H101JCN	C.CAPACITOR CH 50V 100P	1	
C106,07		ECUM1H270JCN	C.CAPACITOR CH 50V 27P	2	
C108		ECUM1H101JCN	C.CAPACITOR CH 50V 100P	1	
C109		ECUM1H270JCN	C.CAPACITOR CH 50V 27P	1	
C110		ECUM1H101JCN	C.CAPACITOR CH 50V 100P	1	
C111		ECUM1H270JCN	C.CAPACITOR CH 50V 27P	1	
C112		ECUM1H103KBN	C.CAPACITOR CH 50V 0.01U	1	
C113		ECUM1H101JCN	C.CAPACITOR CH 50V 100P	1	
C114		ECUM1H270JCN	C.CAPACITOR CH 50V 27P	1	
C115		ECEA1CKG470	E.CAPACITOR 16V 47U	1	
C116		ECUM1H103KBN	C.CAPACITOR CH 50V 0.01U	1	

Refer to the P.C.BOARDS LIST, page 6-1-1, before using this page.

Ref.No.		Part No.	Part Name & Description	Pcs	Remarks
C117		ECEA1CU101	E.CAPACITOR 16V 100U	1	
C118		ECUM1H103KBN	C.CAPACITOR CH 50V 0.01U	1	
C119		ECUM1H101JCN	C.CAPACITOR CH 50V 100P	1	
C120		ECUM1H270JCN	C.CAPACITOR CH 50V 27P	1	
C121		ECUM1H101JCN	C.CAPACITOR CH 50V 100P	1	
C122		ECUM1H270JCN	C.CAPACITOR CH 50V 27P	1	
C123		ECUM1H101JCN	C.CAPACITOR CH 50V 100P	1	
C124		ECUM1H270JCN	C.CAPACITOR CH 50V 27P	1	
C125-36		ECUM1E104ZFN	C.CAPACITOR CH 25V 0.1U	12	
CN250		VJP1879T	CONNECTOR (MALE)	1	
CN251,52		VJP1881T	CONNECTOR (MALE)	2	
CN253		VJP1876T	CONNECTOR (MALE)	1	
D1-D3		MA151WK	DIODE	3	
D4		MA151K	DIODE	1	
D101-07		MA3130-L	DIODE	7	
IC101		AN78N09	IC	1	
IC102		AN79N09	IC	1	
L1,L2		VLQEL05F101K	COIL 100UH	2	
P1		VJP1875T	CONNECTOR (MALE)	1	
P3		VJP1875T	CONNECTOR (MALE)	1	
Q1-Q7		2SA1226	TRANSISTOR	7	
Q101		2SB709	TRANSISTOR CHIP	1	(Q,R)
Q102,03		2SD601	TRANSISTOR CHIP	2	(Q,R)
Q104		2SB709	TRANSISTOR CHIP	1	(Q,R)
Q105,06		2SD601	TRANSISTOR CHIP	2	(Q,R)
Q107		2SB709	TRANSISTOR CHIP	1	(Q,R)
Q108,09		2SD601	TRANSISTOR CHIP	2	(Q,R)
Q110		2SB709	TRANSISTOR CHIP	1	(Q,R)
Q111,12		2SD601	TRANSISTOR CHIP	2	(Q,R)
Q113		2SB709	TRANSISTOR CHIP	1	(Q,R)
Q114,15		2SD601	TRANSISTOR CHIP	2	(Q,R)
Q116		2SB709	TRANSISTOR CHIP	1	(Q,R)
Q117,18		2SD601	TRANSISTOR CHIP	2	(Q,R)
Q119		2SB709	TRANSISTOR CHIP	1	(Q,R)
Q120,21		2SD601	TRANSISTOR CHIP	2	(Q,R)
			RESISTORS		
R1,R2		VRE0034E151	M.RESISTOR CH 1/10W 150	2	
R3		ERJ6GEYJ101	M.RESISTOR CH 1/10W 100	1	
R4,R5		ERJ6GEYJ152	M.RESISTOR CH 1/10W 1.5K	2	
R6		ERJ6GEYJ330	M.RESISTOR CH 1/10W 33	1	
R7		ERJ6GEYJ104	M.RESISTOR CH 1/10W 100K	1	
R8,R9		VRE0034E151	M.RESISTOR CH 1/10W 150	2	
R10		ERJ6GEYJ101	M.RESISTOR CH 1/10W 100	1	
R11,12		ERJ6GEYJ152	M.RESISTOR CH 1/10W 1.5K	2	
R13		ERJ6GEYJ330	M.RESISTOR CH 1/10W 33	1	
R14		ERJ6GEYJ104	M.RESISTOR CH 1/10W 100K	1	
R15,16		VRE0034E151	M.RESISTOR CH 1/10W 150	2	
R17		ERJ6GEYJ101	M.RESISTOR CH 1/10W 100	1	
R18		ERJ6GEYJ122	M.RESISTOR CH 1/10W 1.2K	1	
R19		ERJ6GEYJ330	M.RESISTOR CH 1/10W 33	1	
R20,21		VRE0034E151	M.RESISTOR CH 1/10W 150	2	
R22		ERJ6GEYJ101	M.RESISTOR CH 1/10W 100	1	
R23		ERJ6GEYJ122	M.RESISTOR CH 1/10W 1.2K	1	
R24		ERJ6GEYJ330	M.RESISTOR CH 1/10W 33	1	

Ref.No.		Part No.	Part Name & Description	Pcs	Remarks
R25,26		VRE0034E151	M.RESISTOR CH 1/10W 150	2	
R27		ERJ6GEYJ101	M.RESISTOR CH 1/10W 100	1	
R28,29		ERJ6GEYJ152	M.RESISTOR CH 1/10W 1.5K	2	
R30		ERJ6GEYJ330	M.RESISTOR CH 1/10W 33	1	
R31		ERJ6GEYJ101	M.RESISTOR CH 1/10W 100	1	
R32,33		ERJ6GEYJ152	M.RESISTOR CH 1/10W 1.5K	2	
R34		ERJ6GEYJ330	M.RESISTOR CH 1/10W 33	1	
R35		ERJ6GEYJ101	M.RESISTOR CH 1/10W 100	1	
R36,37		ERJ6GEYJ152	M.RESISTOR CH 1/10W 1.5K	2	
R38		ERJ6GEYJ330	M.RESISTOR CH 1/10W 33	1	
R39		VRE0034E151	M.RESISTOR CH 1/10W 150	1	
R40		VRE0034E64X	M.RESISTOR CH 1/10W 45.3	1	
R41		VRE0034E151	M.RESISTOR CH 1/10W 150	1	
R42		VRE0034E64X	M.RESISTOR CH 1/10W 45.3	1	
R43,44		VRE0034E03A	M.RESISTOR CH 1/10W 105	2	
R101,02		ERJ6GEYJ222	M.RESISTOR CH 1/10W 2.2K	2	
R103		ERJ6GEYJ470	M.RESISTOR CH 1/10W 47	1	
R104		ERJ6GEYJ222	M.RESISTOR CH 1/10W 2.2K	1	
R105,06		ERJ6GEYJ151	M.RESISTOR CH 1/10W 150	2	
R107		VRE0034E750	M.RESISTOR CH 1/10W 75	1	
R108,09		ERJ6GEYJ332	M.RESISTOR CH 1/10W 3.3K	2	
R110		VRE0034E750	M.RESISTOR CH 1/10W 75	1	
R111,12		ERJ6GEYJ222	M.RESISTOR CH 1/10W 2.2K	2	
R113		ERJ6GEYJ470	M.RESISTOR CH 1/10W 47	1	
R114		ERJ6GEYJ222	M.RESISTOR CH 1/10W 2.2K	1	
R115,16		ERJ6GEYJ151	M.RESISTOR CH 1/10W 150	2	
R117		VRE0034E750	M.RESISTOR CH 1/10W 75	1	
R118		ERJ6GEYJ332	M.RESISTOR CH 1/10W 3.3K	1	
R119,20		ERJ6GEYJ222	M.RESISTOR CH 1/10W 2.2K	2	
R121		ERJ6GEYJ470	M.RESISTOR CH 1/10W 47	1	
R122		ERJ6GEYJ222	M.RESISTOR CH 1/10W 2.2K	1	
R123,24		ERJ6GEYJ151	M.RESISTOR CH 1/10W 150	2	
R125		VRE0034E750	M.RESISTOR CH 1/10W 75	1	
R126		ERJ6GEYJ332	M.RESISTOR CH 1/10W 3.3K	1	
R127-29		ERJ6GEYJ222	M.RESISTOR CH 1/10W 2.2K	3	
R130,31		ERJ6GEYJ221	M.RESISTOR CH 1/10W 220	2	
R132		VRE0034E750	M.RESISTOR CH 1/10W 75	1	
R133-35		ERJ6GEYJ222	M.RESISTOR CH 1/10W 2.2K	3	
R136		ERJ6GEYJ470	M.RESISTOR CH 1/10W 47	1	
R137		ERJ6GEYJ222	M.RESISTOR CH 1/10W 2.2K	1	
R138,39		ERJ6GEYJ221	M.RESISTOR CH 1/10W 220	2	
R140		VRE0034E750	M.RESISTOR CH 1/10W 75	1	
R141-43		ERJ6GEYJ222	M.RESISTOR CH 1/10W 2.2K	3	
R144		ERJ6GEYJ470	M.RESISTOR CH 1/10W 47	1	
R145		ERJ6GEYJ222	M.RESISTOR CH 1/10W 2.2K	1	
R146,47		ERJ6GEYJ221	M.RESISTOR CH 1/10W 220	2	
R148		VRE0034E750	M.RESISTOR CH 1/10W 75	1	
R149-51		ERJ6GEYJ222	M.RESISTOR CH 1/10W 2.2K	3	
R152		ERJ6GEYJ470	M.RESISTOR CH 1/10W 47	1	
R153		ERJ6GEYJ222	M.RESISTOR CH 1/10W 2.2K	1	
R154,55		ERJ6GEYJ221	M.RESISTOR CH 1/10W 220	2	
R156		VRE0034E750	M.RESISTOR CH 1/10W 75	1	
R157		ERJ6GEYJ222	M.RESISTOR CH 1/10W 2.2K	1	
R158		ERJ6GEYJ470	M.RESISTOR CH 1/10W 47	1	
SW1,W2		VSS0307	SWITCH	2	
SW3,W4		VSS0207	SWITCH	2	
			MISCELLANEOUS		
		VJR0036	PIN	1	
	■	VEP83097B	P.C.BOARD W/COMPONENT		FOR AU-63-P,E,B
			VIDEO IN/OUT		AU-62-P,E,B

Refer to the P.C.BOARDS LIST, page 6-1-1, before using this page.

Ref.No.		Part No.	Part Name & Description	Pcs	Remarks
			CAPACITORS		
C1		ECUM1H103KBN	C.CAPACITOR CH 50V 0.01U	1	
C2		ECEA1CKG470	E.CAPACITOR 16V 47U	1	
C3		ECUM1H103KBN	C.CAPACITOR CH 50V 0.01U	1	
C4		ECEA1CKG470	E.CAPACITOR 16V 47U	1	
C101		ECEA1CKG470	E.CAPACITOR 16V 47U	1	
C102		ECUM1H103KBN	C.CAPACITOR CH 50V 0.01U	1	
C103		ECEA1CU101	E.CAPACITOR 16V 100U	1	
C104		ECUM1H103KBN	C.CAPACITOR CH 50V 0.01U	1	
C105		ECUM1H101JCN	C.CAPACITOR CH 50V 100P	1	
C106,07		ECUM1H270JCN	C.CAPACITOR CH 50V 27P	2	
C108		ECUM1H101JCN	C.CAPACITOR CH 50V 100P	1	
C109		ECUM1H270JCN	C.CAPACITOR CH 50V 27P	1	
C110		ECUM1H101JCN	C.CAPACITOR CH 50V 100P	1	
C111		ECUM1H270JCN	C.CAPACITOR CH 50V 27P	1	
C112		ECUM1H103KBN	C.CAPACITOR CH 50V 0.01U	1	
C113		ECUM1H101JCN	C.CAPACITOR CH 50V 100P	1	
C114		ECUM1H270JCN	C.CAPACITOR CH 50V 27P	1	
C115		ECEA1CKG470	E.CAPACITOR 16V 47U	1	
C116		ECUM1H103KBN	C.CAPACITOR CH 50V 0.01U	1	
C117		ECEA1CU101	E.CAPACITOR 16V 100U	1	
C118		ECUM1H103KBN	C.CAPACITOR CH 50V 0.01U	1	
C119		ECUM1H101JCN	C.CAPACITOR CH 50V 100P	1	
C120		ECUM1H270JCN	C.CAPACITOR CH 50V 27P	1	
C121		ECUM1H101JCN	C.CAPACITOR CH 50V 100P	1	
C122		ECUM1H270JCN	C.CAPACITOR CH 50V 27P	1	
C123		ECUM1H101JCN	C.CAPACITOR CH 50V 100P	1	
C124		ECUM1H270JCN	C.CAPACITOR CH 50V 27P	1	
C125-36		ECUM1E104ZFN	C.CAPACITOR CH 25V 0.1U	12	
CN250		VJP1879T	CONNECTOR (MALE)	1	
CN251,52		VJP1881T	CONNECTOR (MALE)	2	
CN253		VJP1876T	CONNECTOR (MALE)	1	
D1		MA151WK	DIODE	1	
D101-07		MA3130-L	DIODE	7	
IC101		AN78N09	IC	1	
IC102		AN79N09	IC	1	
L1,L2		VLQEL05F101K	COIL 100UH	2	
P3		VJP1875T	CONNECTOR (MALE)	1	
Q2		2SA1226	TRANSISTOR	1	
Q101		2SB709	TRANSISTOR CHIP	1	(Q,R)
Q102,03		2SD601	TRANSISTOR CHIP	2	(Q,R)
Q104		2SB709	TRANSISTOR CHIP	1	(Q,R)
Q105,06		2SD601	TRANSISTOR CHIP	2	(Q,R)
Q107		2SB709	TRANSISTOR CHIP	1	(Q,R)
Q108,09		2SD601	TRANSISTOR CHIP	2	(Q,R)
Q110		2SB709	TRANSISTOR CHIP	1	(Q,R)
Q111,12		2SD601	TRANSISTOR CHIP	2	(Q,R)
Q113		2SB709	TRANSISTOR CHIP	1	(Q,R)
Q114,15		2SD601	TRANSISTOR CHIP	2	(Q,R)
Q116		2SB709	TRANSISTOR CHIP	1	(Q,R)
Q117,18		2SD601	TRANSISTOR CHIP	2	(Q,R)
Q119		2SB709	TRANSISTOR CHIP	1	(Q,R)
Q120,21		2SD601	TRANSISTOR CHIP	2	(Q,R)

Ref.No.		Part No.	Part Name & Description	Pcs	Remarks
			RESISTORS		
R8,R9		VRE0034E151	M.RESISTOR CH 1/10W 150	2	
R10		ERJ6GEYJ101	M.RESISTOR CH 1/10W 100	1	
R11,12		ERJ6GEYJ152	M.RESISTOR CH 1/10W 1.5K	2	
R13		ERJ6GEYJ330	M.RESISTOR CH1/10W 33	1	
R14		ERJ6GEYJ104	M.RESISTOR CH 1/10W 100K	1	
R101,02		ERJ6GEYJ222	M.RESISTOR CH 1/10W 2.2K	2	
R103		ERJ6GEYJ470	M.RESISTOR CH 1/10W 47	1	
R104		ERJ6GEYJ222	M.RESISTOR CH 1/10W 2.2K	1	
R105,06		ERJ6GEYJ151	M.RESISTOR CH 1/10W 150	2	
R107		VRE0034E750	M.RESISTOR CH 1/10W 75	1	
R108,09		ERJ6GEYJ332	M.RESISTOR CH 1/10W 3.3K	2	
R110		VRE0034E750	M.RESISTOR CH 1/10W 75	1	
R111,12		ERJ6GEYJ222	M.RESISTOR CH 1/10W 2.2K	2	
R113		ERJ6GEYJ470	M.RESISTOR CH 1/10W 47	1	
R114		ERJ6GEYJ222	M.RESISTOR CH 1/10W 2.2K	1	
R115,16		ERJ6GEYJ151	M.RESISTOR CH 1/10W 150	2	
R117		VRE0034E750	M.RESISTOR CH 1/10W 75	1	
R118		ERJ6GEYJ332	M.RESISTOR CH 1/10W 3.3K	1	
R119,20		ERJ6GEYJ222	M.RESISTOR CH 1/10W 2.2K	2	
R121		ERJ6GEYJ470	M.RESISTOR CH 1/10W 47	1	
R122		ERJ6GEYJ222	M.RESISTOR CH 1/10W 2.2K	1	
R123,24		ERJ6GEYJ151	M.RESISTOR CH 1/10W 150	2	
R125		VRE0034E750	M.RESISTOR CH 1/10W 75	1	
R126		ERJ6GEYJ332	M.RESISTOR CH 1/10W 3.3K	1	
R127-29		ERJ6GEYJ222	M.RESISTOR CH 1/10W 2.2K	3	
R130,31		ERJ6GEYJ221	M.RESISTOR CH 1/10W 220	2	
R132		VRE0034E750	M.RESISTOR CH 1/10W 75	1	
R133-35		ERJ6GEYJ222	M.RESISTOR CH 1/10W 2.2K	3	
R136		ERJ6GEYJ470	M.RESISTOR CH 1/10W 47	1	
R137		ERJ6GEYJ222	M.RESISTOR CH 1/10W 2.2K	1	
R138,39		ERJ6GEYJ221	M.RESISTOR CH 1/10W 220	2	
R140		VRE0034E750	M.RESISTOR CH 1/10W 75	1	
R141-43		ERJ6GEYJ222	M.RESISTOR CH 1/10W 2.2K	3	
R144		ERJ6GEYJ470	M.RESISTOR CH 1/10W 47	1	
R145		ERJ6GEYJ222	M.RESISTOR CH 1/10W 2.2K	1	
R146,47		ERJ6GEYJ221	M.RESISTOR CH 1/10W 220	2	
R148		VRE0034E750	M.RESISTOR CH 1/10W 75	1	
R149-51		ERJ6GEYJ222	M.RESISTOR CH 1/10W 2.2K	3	
R152		ERJ6GEYJ470	M.RESISTOR CH 1/10W 47	1	
R153		ERJ6GEYJ222	M.RESISTOR CH 1/10W 2.2K	1	
R154,55		ERJ6GEYJ221	M.RESISTOR CH 1/10W 220	2	
R156		VRE0034E750	M.RESISTOR CH 1/10W 75	1	
R157		ERJ6GEYJ222	M.RESISTOR CH 1/10W 2.2K	1	
R158		ERJ6GEYJ470	M.RESISTOR CH 1/10W 47	1	
SW2		VSS0307	SWITCH	1	
			MISCELLANEOUS		
		VJR0036	RUG PIN	1	
	■	VEP83097C	P.C.BOARD W/COMPONENT		FOR AU-65-E,B
			VIDEO IN/OUT		
			CAPACITORS		
C1		ECUM1H103KBN	C.CAPACITOR CH 50V 0.01U	1	
C2		ECEA1CKG470	E.CAPACITOR 16V 47U	1	
C3		ECUM1H103KBN	C.CAPACITOR CH 50V 0.01U	1	
C4		ECEA1CKG470	E.CAPACITOR 16V 47U	1	

Refer to the P.C.BOARDS LIST, page 6-1-1, before using this page.

Ref.No.		Part No.	Part Name & Description	Pcs	Remarks
C5-C8		ECUM1H103KBN	C.CAPACITOR CH 50V 0.01U	4	
C10		ECQM1H104JF	P.CAPACITOR 50V 0.1U	1	
C101		ECEA1CKG470	E.CAPACITOR 16V 47U	1	
C102		ECUM1H103KBN	C.CAPACITOR CH 50V 0.01U	1	
C103		ECEA1CU101	E.CAPACITOR 16V 100U	1	
C104		ECUM1H103KBN	C.CAPACITOR CH 50V 0.01U	1	
C105		ECUM1H101JCN	C.CAPACITOR CH 50V 100P	1	
C106,07		ECUM1H270JCN	C.CAPACITOR CH 50V 27P	2	
C108		ECUM1H101JCN	C.CAPACITOR CH 50V 100P	1	
C109		ECUM1H270JCN	C.CAPACITOR CH 50V 27P	1	
C110		ECUM1H101JCN	C.CAPACITOR CH 50V 100P	1	
C111		ECUM1H270JCN	C.CAPACITOR CH 50V 27P	1	
C112		ECUM1H103KBN	C.CAPACITOR CH 50V 0.01U	1	
C113		ECUM1H101JCN	C.CAPACITOR CH 50V 100P	1	
C114		ECUM1H270JCN	C.CAPACITOR CH 50V 27P	1	
C115		ECEA1CKG470	E.CAPACITOR 16V 47U	1	
C116		ECUM1H103KBN	C.CAPACITOR CH 50V 0.01U	1	
C117		ECEA1CU101	E.CAPACITOR 16V 100U	1	
C118		ECUM1H103KBN	C.CAPACITOR CH 50V 0.01U	1	
C119		ECUM1H101JCN	C.CAPACITOR CH 50V 100P	1	
C120		ECUM1H270JCN	C.CAPACITOR CH 50V 27P	1	
C121		ECUM1H101JCN	C.CAPACITOR CH 50V 100P	1	
C122		ECUM1H270JCN	C.CAPACITOR CH 50V 27P	1	
C123		ECUM1H101JCN	C.CAPACITOR CH 50V 100P	1	
C124		ECUM1H270JCN	C.CAPACITOR CH 50V 27P	1	
C125-36		ECUM1E104ZFN	C.CAPACITOR CH 25V 0.1U	12	
CN250		VJP1879T	CONNECTOR(MALE)	1	
CN251,52		VJP1881T	CONNECTOR(MALE)	2	
CN253		VJP1876T	CONNECTOR(MALE)	1	
D1-D3		MA151WK	DIODE	3	
D4		MA151K	DIODE	1	
D101-07		MA3130-L	DIODE	7	
IC101		AN78N09	IC	1	
IC102		AN79N09	IC	1	
L1,L2		VLQEL05F101K	COIL 100UH	2	
P1		VJP1875T	CONNECTOR(MALE)	1	
P3		VJP1875T	CONNECTOR(MALE)	1	
Q1-Q7		2SA1226	TRANSISTOR	7	
Q101		2SB709	TRANSISTOR CHIP	1	(Q,R)
Q102,03		2SD601	TRANSISTOR CHIP	2	(Q,R)
Q104		2SB709	TRANSISTOR CHIP	1	(Q,R)
Q105,06		2SD601	TRANSISTOR CHIP	2	(Q,R)
Q107		2SB709	TRANSISTOR CHIP	1	(Q,R)
Q108,09		2SD601	TRANSISTOR CHIP	2	(Q,R)
Q110		2SB709	TRANSISTOR CHIP	1	(Q,R)
Q111,12		2SD601	TRANSISTOR CHIP	2	(Q,R)
Q113		2SB709	TRANSISTOR CHIP	1	(Q,R)
Q114,15		2SD601	TRANSISTOR CHIP	2	(Q,R)
Q116		2SB709	TRANSISTOR CHIP	1	(Q,R)
Q117,18		2SD601	TRANSISTOR CHIP	2	(Q,R)
Q119		2SB709	TRANSISTOR CHIP	1	(Q,R)
Q120,21		2SD601	TRANSISTOR CHIP	2	(Q,R)
			RESISTORS		
R1,R2		VRE0034E151	M.RESISTOR CH 1/10W 150	2	

Ref.No.		Part No.	Part Name & Description	Pcs	Remarks
R3		ERJ6GEYJ101	M.RESISTOR CH 1/10W 100	1	
R4,R5		ERJ6GEYJ152	M.RESISTOR CH 1/10W 1.5K	2	
R6		ERJ6GEYJ330	M.RESISTOR CH 1/10W 33	1	
R7		ERJ6GEYJ104	M.RESISTOR CH 1/10W 100K	1	
R8,R9		VRE0034E151	M.RESISTOR CH 1/10W 150	2	
R10		ERJ6GEYJ101	M.RESISTOR CH 1/10W 100	1	
R11,12		ERJ6GEYJ152	M.RESISTOR CH 1/10W 1.5K	2	
R13		ERJ6GEYJ330	M.RESISTOR CH 1/10W 33	1	
R14		ERJ6GEYJ104	M.RESISTOR CH 1/10W 100K	1	
R15,16		VRE0034E151	M.RESISTOR CH 1/10W 150	2	
R17		ERJ6GEYJ101	M.RESISTOR CH 1/10W 100	1	
R18		ERJ6GEYJ122	M.RESISTOR CH 1/10W 1.2K	1	
R19		ERJ6GEYJ330	M.RESISTOR CH 1/10W 33	1	
R20,21		VRE0034E151	M.RESISTOR CH 1/10W 150	2	
R22		ERJ6GEYJ101	M.RESISTOR CH 1/10W 100	1	
R23		ERJ6GEYJ122	M.RESISTOR CH 1/10W 1.2K	1	
R24		ERJ6GEYJ330	M.RESISTOR CH 1/10W 33	1	
R25,26		VRE0034E151	M.RESISTOR CH 1/10W 150	2	
R27		ERJ6GEYJ101	M.RESISTOR CH 1/10W 100	1	
R28,29		ERJ6GEYJ152	M.RESISTOR CH 1/10W 1.5K	2	
R30		ERJ6GEYJ330	M.RESISTOR CH 1/10W 33	1	
R31		ERJ6GEYJ101	M.RESISTOR CH 1/10W 100	1	
R32,33		ERJ6GEYJ152	M.RESISTOR CH 1/10W 1.5K	2	
R34		ERJ6GEYJ330	M.RESISTOR CH 1/10W 33	1	
R35		ERJ6GEYJ101	M.RESISTOR CH 1/10W 100	1	
R36,37		ERJ6GEYJ152	M.RESISTOR CH 1/10W 1.5K	2	
R38		ERJ6GEYJ330	M.RESISTOR CH 1/10W 33	1	
R39		VRE0034E151	M.RESISTOR CH 1/10W 150	1	
R40		VRE0034E64X	M.RESISTOR CH 1/10W	1	
R41		VRE0034E151	M.RESISTOR CH 1/10W 150	1	
R42		VRE0034E64X	M.RESISTOR CH 1/10W	1	
R43,44		VRE0034E03A	M.RESISTOR CH 1/10W	2	
R101,02		ERJ6GEYJ222	M.RESISTOR CH 1/10W 2.2K	2	
R103		ERJ6GEYJ470	M.RESISTOR CH 1/10W 47	1	
R104		ERJ6GEYJ222	M.RESISTOR CH 1/10W 2.2K	1	
R105,06		ERJ6GEYJ151	M.RESISTOR CH 1/10W 150	2	
R107		VRE0034E750	M.RESISTOR CH 1/10W 75	1	
R108,09		ERJ6GEYJ332	M.RESISTOR CH 1/10W 3.3K	2	
R110		VRE0034E750	M.RESISTOR CH 1/10W 75	1	
R111,12		ERJ6GEYJ222	M.RESISTOR CH 1/10W 2.2K	2	
R113		ERJ6GEYJ470	M.RESISTOR CH 1/10W 47	1	
R114		ERJ6GEYJ222	M.RESISTOR CH 1/10W 2.2K	1	
R115,16		ERJ6GEYJ151	M.RESISTOR CH 1/10W 150	2	
R117		VRE0034E750	M.RESISTOR CH 1/10W 75	1	
R118		ERJ6GEYJ332	M.RESISTOR CH 1/10W 3.3K	1	
R119,20		ERJ6GEYJ222	M.RESISTOR CH 1/10W 2.2K	2	
R121		ERJ6GEYJ470	M.RESISTOR CH 1/10W 47	1	
R122		ERJ6GEYJ222	M.RESISTOR CH 1/10W 2.2K	1	
R123,24		ERJ6GEYJ151	M.RESISTOR CH 1/10W 150	2	
R125		VRE0034E750	M.RESISTOR CH 1/10W 75	1	
R126		ERJ6GEYJ332	M.RESISTOR CH 1/10W 3.3K	1	
R127-29		ERJ6GEYJ222	M.RESISTOR CH 1/10W 2.2K	3	
R130,31		ERJ6GEYJ221	M.RESISTOR CH 1/10W 220	2	
R132		VRE0034E750	M.RESISTOR CH 1/10W 75	1	
R133-35		ERJ6GEYJ222	M.RESISTOR CH 1/10W 2.2K	3	
R136		ERJ6GEYJ470	M.RESISTOR CH 1/10W 47	1	
R137		ERJ6GEYJ222	M.RESISTOR CH 1/10W 2.2K	1	
R138,39		ERJ6GEYJ221	M.RESISTOR CH 1/10W 220	2	
R140		VRE0034E750	M.RESISTOR CH 1/10W 75	1	
R141-43		ERJ6GEYJ222	M.RESISTOR CH 1/10W 2.2K	3	
R144		ERJ6GEYJ470	M.RESISTOR CH 1/10W 47	1	
R145		ERJ6GEYJ222	M.RESISTOR CH 1/10W 2.2K	1	
R146,47		ERJ6GEYJ221	M.RESISTOR CH 1/10W 220	2	
R148		VRE0034E750	M.RESISTOR CH 1/10W 75	1	
R149-51		ERJ6GEYJ222	M.RESISTOR CH 1/10W 2.2K	3	
R152		ERJ6GEYJ470	M.RESISTOR CH 1/10W 47	1	
R153		ERJ6GEYJ222	M.RESISTOR CH 1/10W 2.2K	1	
R154,55		ERJ6GEYJ221	M.RESISTOR CH 1/10W 220	2	
R156		VRE0034E750	M.RESISTOR CH 1/10W 75	1	
R157		ERJ6GEYJ222	M.RESISTOR CH 1/10W 2.2K	1	
R158		ERJ6GEYJ470	M.RESISTOR CH 1/10W 47	1	
SW1,W2		VSS0307	SWITCH	2	

Refer to the P.C.BOARDS LIST, page 6-1-1, before using this page.

Ref.No.		Part No.	Part Name & Description	Pcs	Remarks
			MISCELLANEOUS		
		VJR0036	RUG PIN	1	
	■	VEP80574A	P.C.BOARD W/COMPONENT		
			YC IN/OUT		
CN270		VJP1244T	CONNECTOR(MALE) 4P	1	
J201		VJS2579	CONNECTOR (FEMALE)	1	
	■	VEP80551A	P.C.BOARD W/COMPONENT		
			9P REMOTE		
CN280		VJP1235T	CONNECTOR(MALE) 8P	1	
9P.1		VJS2642A009	CONNECTOR (FEMALE)	1	

Refer to the P.C.BOARDS LIST, page 6-1-1, before using this page.

MECHANICAL REPLACEMENT PARTS LIST

CASING FRAME ASSEMBLY

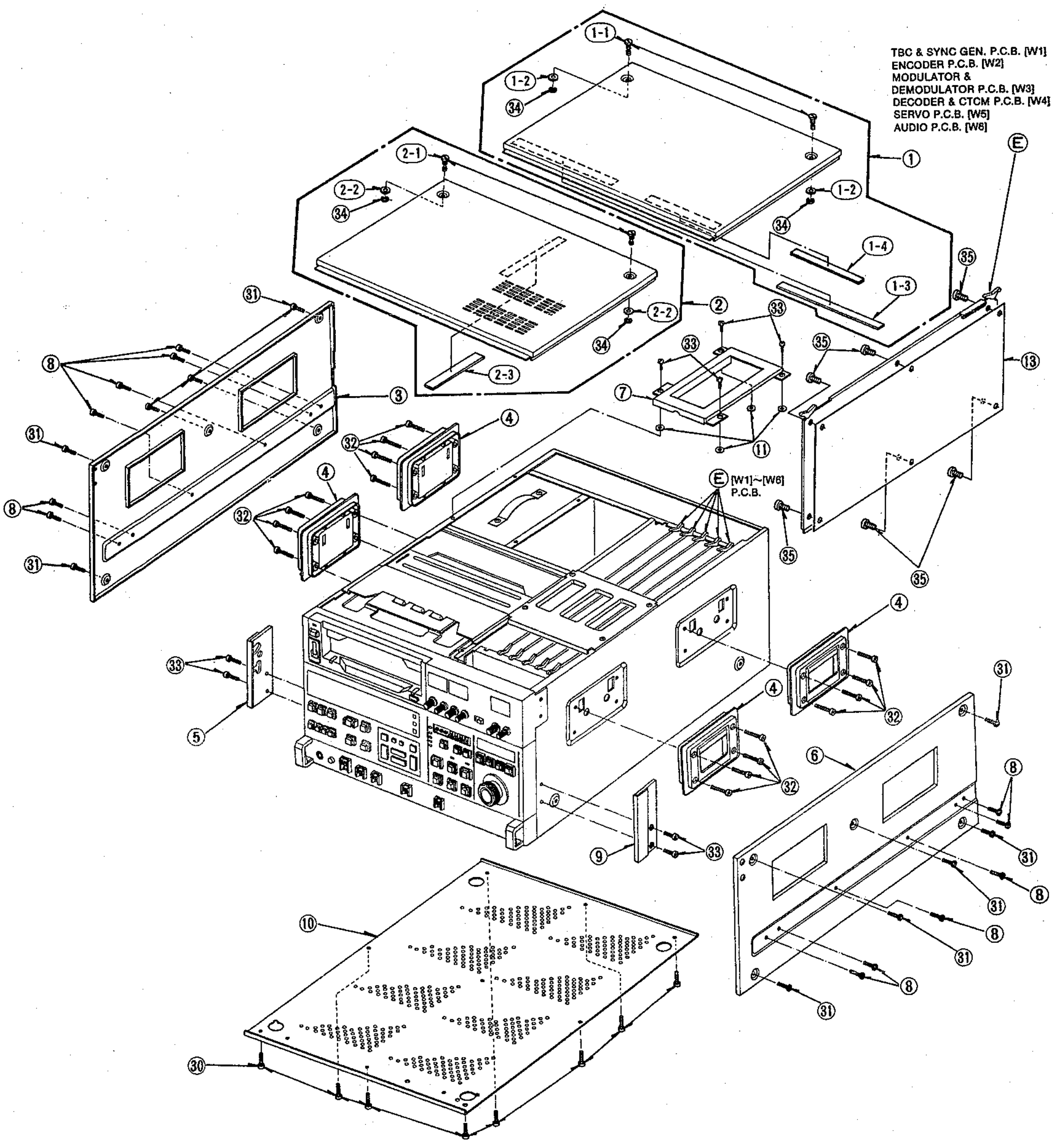
1-1
1-2
34
TBC & SYNC GEN. P.C.B. [W1]
ENCODER P.C.B. [W2]
MODULATOR &
DEMODULATOR P.C.B. [W3]
DECODER & CTCM P.C.B. [W4]
SERVO P.C.B. [W5]
AUDIO P.C.B. [W6]
Ⓔ
①
2-1
2-2
34
1-2
34
1-4
1-3
㉟
31
⑧
2-2
34
②
2-3
㉝
㉝
㉟
⑬
③
⑦
31
④
32
⑪
④
Ⓔ [W1]~[W6] P.C.B.
⑧
32
31
㉟
㉟
④
㉝
31
⑤
④
32
⑥
32
⑧
⑨
㉝
31
⑩
31
⑧
⑧
31
⑧
31
30

CASING FRAME ASSEMBLY

Ref.No.		Part No.	Part Name & Description	Pcs	Remarks
1		VYP2980	REAR TOP COVER UNIT	1	
1-1		VHD0274	TOP COVER SCREW	2	
1-2		VMX0835	TOP COVER SPACER (SCREW)	2	
1-3		VMX1835	REAR TOP COVER SPACER (A)	1	
1-4		VMT0119	P.C.B. PRESSURE RUBBER	1	
2		VYP2979	FRONT TOP COVER UNIT	1	
2-1		VHD0274	TOP COVER SCREW	2	
2-2		VMX0835	TOP COVER SPACER (SCREW)	2	
2-3		VMX1836	FRONT TOP COVER SPACER (B)	1	
3		VGM0610	LEFT SIDE COVER	1	
4		VYH0128	HANDLE	4	
5		VYK1492	LEFT SIDE PANEL PLATE UNIT	1	
6		VGM0609	RIGHT SIDE COVER	1	
7		VMP2597	POWER UNIT MOUNT ANGLE	1	
8		VHD0153	RAIL MOUNT SCREW	12	
9		VYK1491	RIGHT SIDE PANEL PLATE UNIT	1	
10		VGM0591	BOTTOM PLATE	1	
11		VMX1558	WASHER	4	
13		VXA3966	W P.C.B. SHIELD PLATE	6	5pcs:AU-63-P,AU-63-E,AU-62-P,AU-62-E
30		XSB3+6S	SCREW	8	
31		XSB4+8FCS	SCREW	10	
32		XSB4+16FCS	SCREW	16	
33		XTV3+6F	SCREW	8	
34		XUC3FP	E-RING	4	
35		XYNV3+K6FR	SCREW	6	

MECHANICAL CHASSIS ASSEMBLY (1)

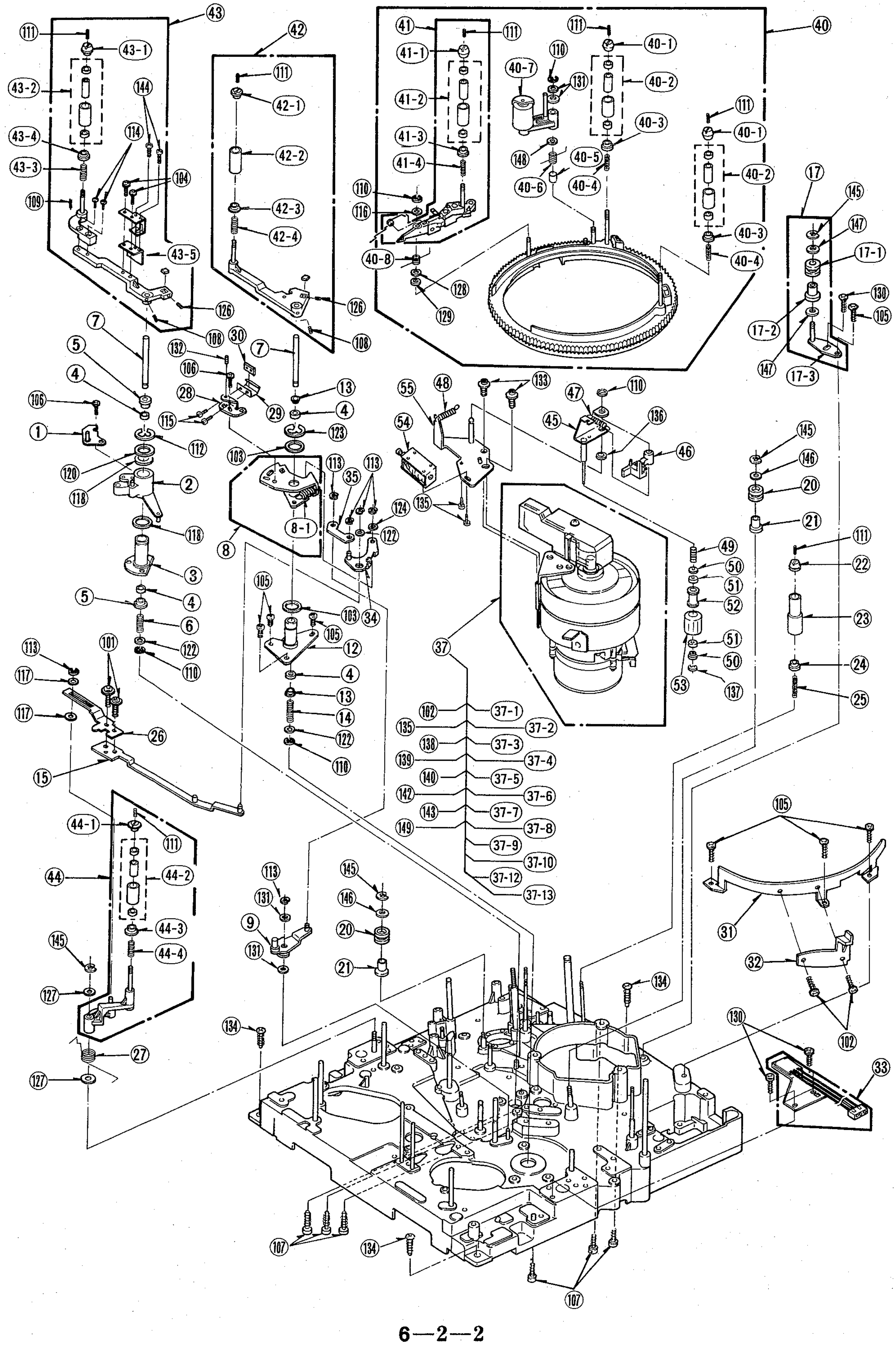

43
111
43-1
43-2
144
43-4
114
43-3
104
109
43-5
126
108
42
111
42-1
42-2
42-3
42-4
126
108
41
111
41-1
41-2
41-3
41-4
110
116
40-8
128
129
111
40-1
110
40-7
131
40-2
40-3
148
40-5
40-6
40-4
40
111
40-1
40-2
40-3
40-4
17
145
147
17-1
130
105
17-2
147
17-3
7
5
4
106
1
132
30
106
28
115
29
7
13
4
123
112
120
118
2
103
113
113
35
124
8-1
122
8
118
3
34
5
4
6
122
110
105
103
105
12
4
13
14
122
110
55
48
133
110
47
45
136
46
54
135
37
49
50
51
52
51
50
53
137
145
146
20
21
111
22
23
24
25
113
117
101
117
26
15
102
37-1
135
37-2
138
37-3
139
37-4
140
37-5
142
37-6
143
37-7
149
37-8
37-9
37-10
37-12
37-13
44-1
111
44
44-2
145
44-3
44-4
127
27
127
113
131
9
131
145
146
20
21
134
134
105
31
32
102
130
33
107
134
107

MECHANICAL CHASSIS ASSEMBLY (1)

Ref.No.		Part No.	Part Name & Description	Pcs	Remarks
1		VXA2302	STOPPER PIN BASE UNIT	1	
2		VXL1309	SUPPLY TA SUB-ARM (1) UNIT	1	
3		VDB0772	SUPPLY TENSION SUPORT HOUSING	1	
4		VDB0779	BEARING	4	
5		VMX0794	BEARING RETAINER	2	
6		VMB1378	POST SPRING	1	
7		VMS3662	PANEL FIXTURE (LEFT)	2	
8		VXA4001	TAKE-UP DRAW OUT ARM UNIT	1	
8-1		VMB2131	TAKE-UP TENSION CHARGE SPRING	1	
9		VXA3994	TAKE-UP DRAW-UP DRIVE LEVER UNIT	1	
12		VXD0126	TAKE-UP TENSION HOUSING	1	
13		VMX0794	BEARING RETAINER	2	
14		VMB1377	POST SPRING	1	
15		VXA4003	P1 ARM DRIVE ROD II UNIT	1	
17		VXR0206	RING ROLLER UNIT	1	
17-1		VDP1360	RING ROLLER	1	
17-2		VDB1079	RING ROLLER BOSS	1	
17-3		VXA4252	RING ROLLER (1) UNIT	1	
20		VDP1360	RING ROLLER	2	
21		VDB1079	RING ROLLER BOSS	2	
22		VMS3712	UPPER FLANGE (P4)	1	
23		VXP0824	LIMITER ROLLER (B) UNIT	1	
24		VMS2806	POST BEARING RETAINER (A) (P4)	1	
25		VMB1379	POST SPRING (P3)	1	
26		VMM0237	P1 ARM DRIVE ROD (I)	1	
27		VMB1362	P1 ARM DRAW-OUT SPRING	1	
28		VMA8178	TAKE-UP TENSION REGULATING PLATE	1	
29		VMC0595	TAKE-UP TENSION LEAF SPRING	1	
30		VMA8181	FIXING PLATE	1	
31		VMA6652	TURN ROLLER LIFTER	1	
32		VML1780	STOPPER ARM	1	
33		VEK3785	TAKE-UP MAGNETIC SENSOR UNIT	1	
34		VXA4002	STOPPER ARM UNIT	1	
35		VMM0236	DRAW-OUT ROD	1	
37		VEG0780	DRUM UNIT	1	AU-65-P
37		VEG0837	DRUM UNIT	1	AU-65-E
37		VEG0806	DRUM UNIT	1	AU-63-P
37		VEG0839	DRUM UNIT	1	AU-63-E
37		VEG0804	DRUM UNIT	1	AU-62-P
37		VEG0838	DRUM UNIT	1	AU-62-E
37-1		VEH0475	UPPER DRUM UNIT	1	AU-65-P,AU-62-P
37-1		VEH0482	UPPER DRUM UNIT	1	AU-63-P
37-1		VEH0494	UPPER DRUM UNIT	1	AU-65-E,AU-62-E
37-1		VEH0495	UPPER DRUM UNIT	1	AU-63-E
37-2		VMD1572	RT ARM BLOCK	1	
37-3		VEK2372	DEW SENSOR	1	
37-4		VSC1334	SHIELD PLATE	1	
37-5		VAG0273	TAPE GUIDE	1	
37-6		VSC2693	SHIELD BAND	1	
37-7		VXS0102	BRUSH UNIT	1	AU-63-P,AU-63-E
37-8		VXS0092	SLIP-RING UNIT	1	AU-63-P,AU-63-E
37-9		VEG0781	LOWER DRUM UNIT	1	AU-65-P,AU-65-E
37-9		VEG0812	LOWER DRUM UNIT	1	AU-63-P,AU-63-E
37-9		VEG0809	LOWER DRUM UNIT	1	AU-62-P,AU-62-E
37-10		VMD1612	BRUSH COVER	1	AU-63-P,AU-63-E
37-12		VMA8157	EARTH ANGLE	1	AU-65-P,AU-65-E, AU-62-P,AU-62-E
37-13		VXS0024	EARTH BRUSH	1	AU-65-P,AU-65-E, AU-62-P,AU-62-E
40		VXP1182	LOADING RING UNIT	1	
40-1		VMS3638	UPPER FLANGE	2	
40-2		VXP0821	POST ROLLER (B) UNIT	2	
40-3		VMS2803	LOWER FLANGE	2	
40-4		VMB1377	POST SPRING	2	
40-5		VMX1406	PINCH ARM SHAFT COLLAR	1	
40-6		VMB1373	PINCH ROLLER RETURN SPRING	1	
40-7		VXL1288	PINCH ROLLER ARM UNIT	1	
40-8		VMB1796	TR ARM RETURN SPRING A	1	
41		VXL1754	TURN ROLLER ARM UNIT	1	
41-1		VMS3638	UPPER FLANGE	1	
41-2		VXP0821	POST ROLLER (B) UNIT	1	
41-3		VMS2803	LOWER FLANGE	1	
41-4		VMB1376	POST SPRING	1	
42		VXL1319	TAKE-UP TENSION ARM UNIT	1	
42-1		VMS3639	UPPER FLANGE (P1)	1	
42-2		VXP0820	POST ROLLER (A) UNIT	1	
42-3		VMS2800	LOWER FLANGE (P3)	1	
42-4		VMB1378	POST SPRING	1	
42-5		VXL1991	TAKE-UP TENSION ARM UNIT	1	
43		VXL1320	SUPPLY TENSION ARM UNIT	1	
43-1		VMS4572	UPPER FLANGE (P2)	1	
43-2		VXP0820	POST ROLLER (A) UNIT	1	
43-3		VMB1378	POST SPRING	1	
43-4		VMS2801	LOWER FLANGE (P2)	1	
43-5		VMC0119	SUPPLY TENSION LEAF SPRING	1	
44		VXL1323	DRAW-OUT ARM UNIT	1	
44-1		VMS3639	UPPER FLANGE (P1)	1	
44-2		VXP0820	POST ROLLER (A) UNIT	1	
44-3		VMS2800	LOWER FLANGE (P3)	1	
44-4		VMB1378	POST SPRING	1	
45		VXL1994	CLEANER ARM (A) UNIT	1	
46		VML2393	CLEANER ARM (B)	1	
47		VMB2128	ROLLER PRESSURE SPRING	1	
48		VMB2129	ROLLER SPRING	1	
49		VMB1379	POST SPRING (P3)	1	
50		VMX1161	P4 BEARING PRESSURE	2	
51		VDB0778	BEARING	2	
52		VDP1321	CLEANEAR ROLLER	1	
53		VMT0321	CLEANER	1	
54		VSJ0096	CLEANER SOLENOID	1	
55		VXA4016	CLEANER BASE UNIT	1	
56		VXA4013	T-STOPPER PIN BASE UNIT	1	
101		XYN26+F5FZS	SCREW	2	
102		XYN26+C4	SCREW	3	
103		XWGV93D13G	WASHER	2	
104		XYNV26+K8	SCREW	2	
105		XTV3+6F	SCREW	7	
106		XYNV26+K5	SCREW	2	
107		XYNV3+K10S	SCREW	6	
108		XXE26W3FP	HEX HEAD SCREW	2	
109		XXE26A4FP	HEX HEAD SCREW	1	
110		XUC25FP	E RING	4	
111		XXE2C25FP	HEX HEAD SCREW	8	
112		XUC8FP	E RING	1	
113		XUC2FP	E RING	6	
114		XSN2+6	SCREW	2	
115		XYN2+C4	SCREW	2	
116		XWGV3Y6G	WASHER	1	
117		XWGV25D5G	WASHER	2	
118		XWGV10D15G	WASHER	2	
120		XWGV10Y15G	WASHER	1	
122		XWG3	WASHER	3	
123		XUC7FP	E RING	1	
124		XWGV3Y6G	WASHER	1	
126		XXE2D3FP	HEX HEAD SCREW	2	
127		XWGV4D9G	WASHER	1	
128		XWGV3D8G	WASHER	1	
129		XWGV3Y8G	WASHER	1	
130		XTV3+6FFZ	SCREW	3	
131		XWGV3D6G	WASHER	4	
132		XXE2C8FP	HEX HEAD SCREW	1	
133		XYN3+F6FZS	SCREW	2	
134		XYN4+C10S	SCREW	3	
135		XYN2+C3	SCREW	3	
136		XWGV3D6G	WASHER	1	
137		XUC15FP	E-RING	1	
138		XYN3+C6	SCREW	4	
139		XYN3+A10BW	SCREW	2	
140		XYN2+C3	SCREW	1	
142		XYN3+A4	SCREW	1	AU-65-P,AU-65-E, AU-62-P,AU-62-E

To be continued on the next page.

Ref.No.		Part No.	Part Name & Description	Pcs	Remarks
143		XYN26+C6	SCREW	3	
144		XSN2+4	SCREW	2	
145		XUC3FP	E-RING	4	
146		XWGV4D7G	WASHER	2	
147		XWGV4F7G	WASHER	2	
148		XWGV3Z6G	WASHER	1	
149		XYNV0015	SCREW	1	AU-63-P,AU-63-E

MECHANICAL CHASSIS ASSEMBLY (2)

Ref.No.		Part No.	Part Name & Description	Pcs	Remarks
1		VES0565	DETECTION BIT (L) UNIT	1	
1-1		EVQWUS002	CASSETTE ID MODE SWITCH	1	
1-2		VXA4000	DETECTION BIT (L) (1) UNIT	1	
2		VMD1147	CASSETTE GUIDE S	1	
3		VMB1832	CASSETTE GUIDE S SPRING	1	
4		VHN0046	TIMER ROLLER NUT	1	
5		VDB0778	BEARING	2	
6		VMX0801	TIMER ROLLER INNER COLLAR	1	
7		VXP1183	TIMER ROLLER UNIT	1	
8		VMS2806	POST BEARING RETAINER (A) (P4)	1	
9		VMB1379	POST SPRING (P3)	1	
10		VMB1801	P10 RETURN SPRING	1	
11		VXA2525	TILT ADJUST BASE UNIT	1	
12		VXL1786	SUB-LOADING ARM UNIT	1	
12-1		VXR0131	IP BASE UNIT	1	
12-2		VMB1376	POST SPRING	1	
12-3		VMS2870	BEARING RETAINER	1	
12-4		VXP0822	POST BEARING (C) UNIT	1	
12-5		VMS3638	UPPER FLANGE	1	
12-6		VMB1368	TILT RETURN SPRING	1	
12-7		VMB1375	IP ARM RETURN SPRING	1	
13		VXL2066	ROLLER ARM (C) UNIT	1	
14		VXA3990	SUB-LOADING COVER ASSEMBLY	1	
14-1		VXA3996	SUB-LOADING COVER (1) UNIT	1	
14-2		VXL1294	UPRIGHT LEVER UNIT	1	
14-3		VML1694	UPRIGHT DRIVE LEVER	1	
14-4		VMB1762	UPRIGHT LEVER RETURN SPRING	1	
15		VXA3989	TR SENSOR ANGLE UNIT	1	
15-1		VMA8171	TR SENSOR ANGLE (I)	1	
15-2		VMA8172	TR SENSOR ANGLE (II)	1	
16		VDG0667	RING JUNCTION GEAR (I)	1	
17		VDG0668	RING JUNCTION GEAR (II)	1	
18		VDG0669	GEAR WITH CAM	1	
19		VXA4011	PINCH ROLLER GUIDE UNIT	1	
20		VXA3997	CASSETTE REEL BASE S (I) UNIT	1	
21		VEM0264	MOTOR UNIT	1	
22		VDG0666	CAM WORM WHEEL	1	
23		VMA8170	POSITIONING PLATE	1	
24		VDB0833	WORM BEARING	2	
25		VXP1019	CASSETTE S WORM SHAFT UNIT	1	
26		VSH0026	LEAF SWITCH	2	
27		VMX0400	LEAF SWITCH SPACER	1	
28		VMB2132	BALANCING SPRING 1	1	
29		VXA3999	CASSETTE S REEL STAND BASE (1) UNIT	1	
30		VDG0670	CASSETTE S REEL INTERMEDIATE GEAR	1	
31		VMX0653	CUT WASHER	1	
32		VMB2140	INTERMEDIATE GEAR SPRING	1	
33		VMB2141	CASSETTE S REEL STAND SPRING	1	
34		VDB0429	BEARING	1	
35		VMA8177	LAMP MOUNT BASE	1	
36		VEK3493	LAMP MOUNT (1) UNIT	1	
38		VMB2135	SUPPLY DRIVE ARM RETURN SPRING	1	
39		VML2387	SUPPLY TENSION DRIVE ARM	1	

Ref.No.		Part No.	Part Name & Description	Pcs	Remarks
100		XNG3CS	NUT	1	
101		XSN2+3	SCREW	1	
102		XSS26+5	SCREW	1	
103		XTV26+4F	SCREW	5	
104		XTV26+8F	SCREW	1	
106		XTV3+6F	SCREW	11	
107		XTV3+8F	SCREW	5	
108		XQN16+A3	SCREW	1	
109		XYN2+C4	SCREW	2	
110		XYN2+C5	SCREW	1	
111		XYN2+C8	SCREW	1	
112		XYN26+F5FZ	SCREW	1	
113		XYN26+F6FZ	SCREW	2	
114		XXE3A6FPS	HEX HEAD SCREW	1	
115		XXE3C6FP	HEX HEAD SCREW	1	
116		XUC25FP	E-RING	6	
117		XUC2FP	E-RING	1	
118		XUC3FP	E-RING	3	
119		XVE3B6FPS	HEX HEAD SCREW	2	
120		XWA3B	WASHER	2	
121		XWE3	WASHER	2	
122		XWGV3D6G	WASHER	5	
123		XWGV3F6G	WASHER	2	
124		XWGV3Y6G	WASHER	4	
125		XWGV4D7G	WASHER	2	
126		XWGV4F7G	WASHER	1	
127		XWGV4Y7G	WASHER	2	
128		XWGV4Y9G	WASHER	1	
129		XXE2C25FP	HEX HEAD SCREW	2	

MECHANICAL CHASSIS ASSEMBLY (2)

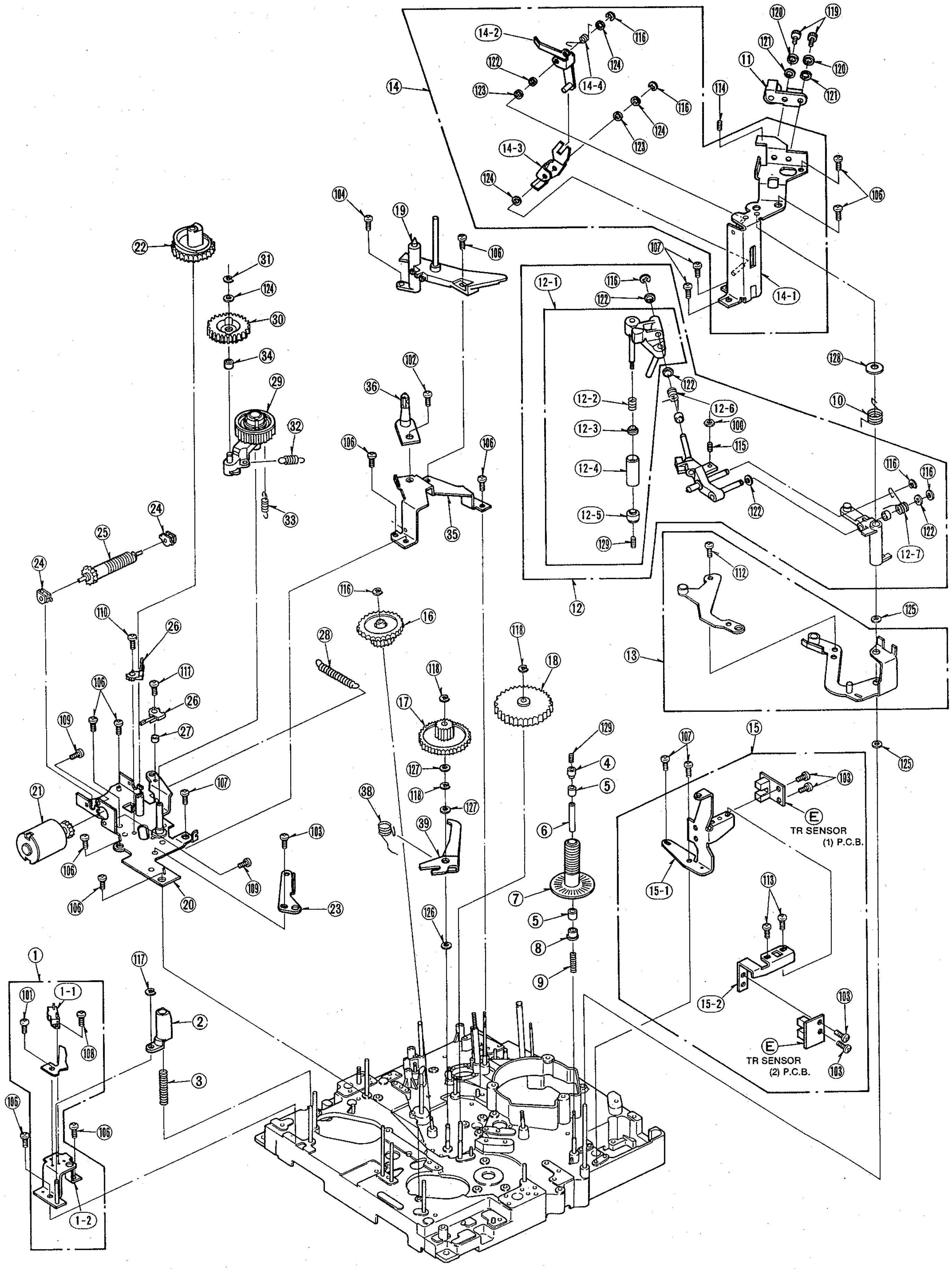

⑭-2
116
124
122
⑭-4
123
⑭
116
124
123
⑭-3
124
120
119
121
120
⑪
121
114
105
104
⑲
106
107
⑭-1
㉒
㉛
124
㉚
㉞
㉙
㉜
㉝
102
㊱
106
106
㉟
⑫-1
116
122
122
⑫-2
⑫-3
⑫-4
⑫-5
129
⑫-6
100
115
128
⑩
116
116
122
⑫-7
⑫
112
125
⑬
125
㉔
㉕
㉔
110
㉖
111
㉖
106
㉗
109
107
㉑
106
106
109
⑳
103
㉓
116
⑯
㉘
118
⑱
118
⑰
127
118
127
㊳
㊴
126
129
④
⑤
⑥
⑦
⑤
⑧
⑨
107
⑮
103
Ⓔ
TR SENSOR
(1) P.C.B.
⑮-1
113
⑮-2
103
Ⓔ
TR SENSOR
(2) P.C.B.
103
①
101
①-1
108
117
②
③
106
106
①-2

MECHANICAL CHASSIS ASSEMBLY (3)

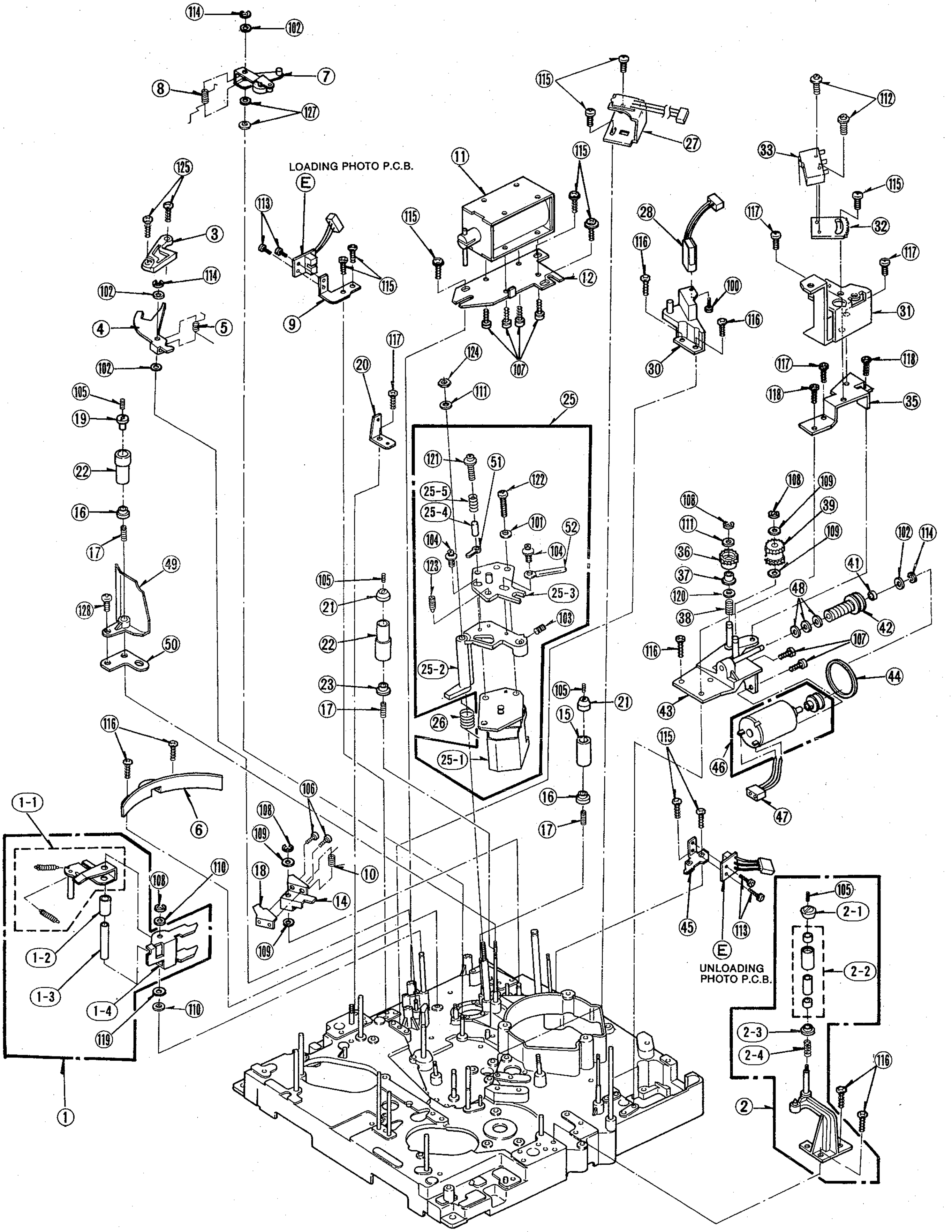

(114)
(102)
⑦
⑧
(127)
(115)
(27)
(112)
(33)
(125)
③
LOADING PHOTO P.C.B.
Ⓔ
(113)
(11)
(115)
(115)
(12)
(28)
(116)
(117)
(115)
(32)
(117)
(114)
(102)
④
⑤
(102)
⑨
(107)
(100)
(116)
(30)
(31)
(117)
(124)
(111)
(25)
(20)
(117)
(118)
(118)
(35)
(105)
(19)
(22)
(121)
(51)
(122)
(25-5)
(25-4)
(101)
(52)
(104)
(104)
(123)
(25-3)
(103)
(16)
(17)
(49)
(128)
(50)
(105)
(21)
(22)
(23)
(17)
(25-2)
(26)
(25-1)
(105)
(21)
(15)
(16)
(17)
(108)
(109)
(39)
(106)
(111)
(109)
(36)
(37)
(120)
(38)
(48)
(41)
(102)
(114)
(42)
(116)
(107)
(43)
(44)
(46)
(47)
(115)
(116)
⑥
(1-1)
(106)
(108)
(109)
⑩
(18)
(14)
(109)
(108)
(110)
(1-2)
(1-3)
(1-4)
(119)
(110)
①
(45)
(113)
Ⓔ
UNLOADING PHOTO P.C.B.
(105)
(2-1)
(2-2)
(2-3)
(2-4)
(116)
②

MECHANICAL CHASSIS ASSEMBLY (3)

Ref.No.		Part No.	Part Name & Description	Pcs	Remarks
1		VXL1679	PINCH PRESSURE LEVER UNIT	1	
1-1		VXL1680	PINCH DRIVE ARM UNIT	1	
1-2		VMX0800	PINCH COLLAR (3)	1	
1-3		VMX0799	PINCH COLLAR (2)	1	
1-4		VML1675	PINCH PRESSURE LEVER	1	
2		VXA3226	CASSETTE POSITIONING BASE	1	
			UNIT		
2-1		VMS3638	UPPER FLANGE	1	
2-2		VXP0821	POST ROLLER (B) UNIT	1	
2-3		VMS2803	LOWER FLANGE	1	
2-4		VMB1376	POST SPRING	1	
3		VMA7289	STOPPER RETAINER	1	
4		VML1702	TR STOPPER LEVER	1	
5		VMB1372	STOPPER LEVER RETURN SPRING	1	
6		VMD1412	TURN ROLLER GUIDE A	1	
7		VXL1995	DRIVE ARM UNIT	1	
8		VMB2134	DRIVE ARM RETURN SPRING	1	
9		VMA6624	LOADING PHOTO PLATE	1	
10		VMB1345	UNLOADING DETECTION RETURN	1	
			SPRING		
11		VSJ0069	PINCH SOLENOIDE	1	
12		VMA6608	PINCH SOLENOIDE BASE	1	
14		VML2091	UNLOADING DETECTION ARM	1	
15		VXP0819	POST ROLLER (A1) UNIT	1	
			(P6)		
16		VMS2800	LOWER FLANGE (P3)	2	
17		VMB1379	POST SPRING (P3)	3	
18		VMA6685	TURN ROLLER RETAINER	1	
19		VMS2807	POST BEARING RETAINER (B)	1	
			(P3)		
20		VMA6625	PINCH RETURN SPRING HOOK	1	
21		VMS3712	UPPER FLANGE (P4)	2	
22		VXP0823	LIMITER ROLLER (A) UNIT	2	
			(P3)		
23		VMS2806	POST BEARING RETAINER (A)	1	
			(P4)		
25		VED0140	A/C HEAD UNIT	1	AU-65-P,AU-65-E
25		VED0142	A/C HEAD UNIT	1	AU-63-P,AU-63-E,
					AU-62-P,AU-62-E
25-1		VBR0167	A/C HEAD	1	AU-65-P,AU-65-E
25-1		VBR0168	A/C HEAD	1	AU-63-P,AU-63-E,
					AU-62-P,AU-62-E
25-2		VMD1579	A/C HEAD HEIGHT ADJUSTMENT	1	
			BASE		
25-3		VXA4085	HEAD MOUNTING BASE UNIT	1	
25-4		VMX1441	ADJUST LOCK COLLAR	1	
25-5		VMB1843	ADJUST SPRING	1	
26		VMB2147	HEAD SPRING	1	
27		VEK3784	SUPPLY MAGNETIC SENSOR	1	
			MOUNT UNIT		
28		VBS0024	FE HEAD	1	AU-65-P,AU-65-E
28		VBS0043	FE HEAD	1	AU-63-P,AU-63-E,
					AU-62-P,AU-62-E
30		VMA7293	FE HEAD BASE	1	
31		VMA7295	MICROSWITCH BASE	1	
32		VMA6715	MICROSWITCH REGULATING	1	
			PLATE		
33		VSM0042	MICROSWITCH	1	
35		VMA6805	MOTOR HOLDER COVER	1	
36		VDG0215	RING DRIVE GEAR	1	
37		VMX1405	DRIVE GEAR SLEEVE A	1	
38		VMB1343	DRIVE GEAR PRESSURE SPRING	1	
39		VDG0216	JUNCTION GEAR	1	
41		VDB0899	BEARING	1	
42		VXP1056	WORM PULLEY UNIT	1	
43		VXA2287	LOADING MOTOR HOLDER UNIT	1	
44		VDV0156	LOADING BELT	1	
45		VMA6623	UNLOADING PHOTO MOUNT	1	
46		VEM0323	LOADING MOTOR UNIT	1	
46-1		VRD0030	LOADING MOTOR	1	
47		VEE3971	CONNECTOR UNIT	1	
48		VDB0371	THRUST BEARING	3	
49		VMD1596	DO PROTECTOR COVER	1	
50		VMA8285	DO PROTECTOR COVER BASE	1	
51		VJR3	CLAMPER	1	
52		VJR3	CLAMPER	1	AU-65-P,AU-65-E
100		XYN2+C5	SCREW	1	
101		XWG26	WASHER	1	
102		XWGV3D6G	WASHER	4	
103		XXE3C6FP	HEX HEAD SCREW	1	
104		XYN26+F6	SCREW	2	
105		XXE2C25FP	HEX HEAD SCREW	4	
106		XYN26+C4	SCREW	2	
107		XYN3+C5S	SCREW	6	
108		XUC3FP	E RING	4	
109		XWGV4D7G	WASHER	4	
110		XWGV4D9G	WASHER	2	
111		XWE4	WASHER	2	
112		XYN2+F10	SCREW	2	
113		XTV26+4F	SCREW	4	
114		XUC25FP	E RING	3	
115		XTV3+6FFZ	SCREW	10	
116		XTV3+8F	SCREW	7	
117		XTV3+6F	SCREW	4	
118		XTV3+10F	SCREW	2	
119		XWGV5D9G	WASHER	1	
120		XWG4FC	WASHER	1	
121		XYN3+F18	SCREW	1	
122		XSN26+12S	SCREW	1	
123		XXE3A8FP	HEX HEAD SCREW	1	
124		XNG4ES	NUT	1	
125		XTV26+6F	SCREW	2	
127		XWGV3F6G	WASHER	2	
128		XSN26+4	SCREW	1	

MECHANICAL CHASSIS ASSEMBLY (4)

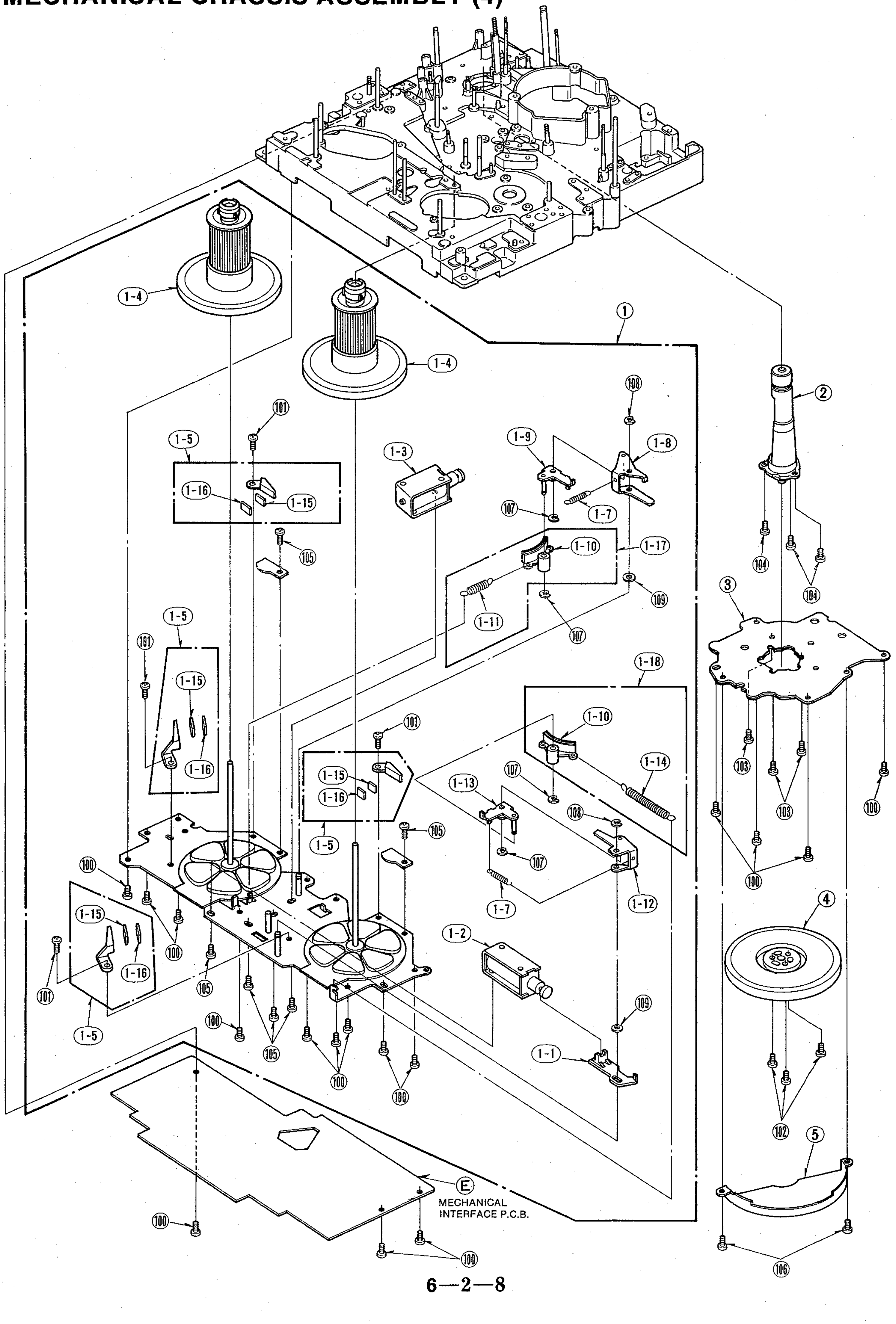

1-4
1-4
1
2
108
101
1-5
1-16
1-15
1-3
1-9
1-8
1-7
107
1-10
1-17
105
109
1-11
107
104
104
104
3
1-5
101
1-15
1-16
1-18
1-10
101
1-15
1-16
1-5
105
107
1-14
1-13
108
107
1-7
1-12
100
103
103
100
100
100
1-15
1-16
101
1-5
100
105
1-2
105
100
100
109
1-1
100
4
102
5
E
MECHANICAL
INTERFACE P.C.B.
100
100
106

MECHANICAL CHASSIS ASSEMBLY (4)

Ref.No.		Part No.	Part Name & Description	Pcs	Remarks
1		VXA3995	REEL BASE UNIT	1	
1-1		VMM0240	BRAKE RELEASE ROD	1	
1-2		VSJ0098	TAKE-UP BRAKE SOLENOID	1	
1-3		VSJ0097	SUPPLY BARAKE SOLENOID	1	
1-4		VXR0191	REEL STAND UNIT	2	
1-5		VXA2046	FG HOLDER UNIT	4	
1-7		VMB2139	BRAKE SPRING (II)	2	
1-8		VXL1996	SUPPLY BRAKE ARM (1) UNIT	1	
1-9		VXL1997	SUPPLY BRAKE ARM (2) UNIT	1	
1-10		VXL1998	SUPPLY BRAKE ARM (3) UNIT	2	
1-11		VMB2137	SUPPLY BRAKE SPRING (II)	1	
1-12		VXL1999	TAKE-UP BRAKE ARM (1) UNIT	1	
1-13		VXL2000	TAKE-UP BRAKE ARM (2) UNIT	1	
1-14		VMB2138	TAKE-UP BRAKE SPRING (I)	1	
1-15		HW-300B	HALL ELEMENT	4	
1-16		VMD0621	FG SUPPORT (2)	4	
1-17		VXA4004	SUPPLY BRAKE ARM (3) UNIT	1	
1-18		VXA4005	TAKE-UP BRAKE ARM (3) UNIT	1	
2		VXD0110	CAPSTAN HOUSING UNIT	1	
3		VEK3699	CAPSTAN STATOR UNIT	1	
4		VXP0940	ROTOR UNIT	1	AU-65-P,AU-63-P,
					AU-62-P
4		VXP1235	ROTOR UNIT	1	AU-65-E,AU-63-E,
					AU-62-E
5		VSC2066	CAPSTAN MOTOR COVER	1	
100		XTV3+6F	SCREW	16	
101		XYN2+F4	SCREW	4	
102		XYN2+C10	SCREW	3	
103		XYN2+C6V	SCREW	3	
104		XYN26+C7V	SCREW	3	
105		XYN26+F4	SCREW	6	
106		XYNV26+K4S	SCREW	2	
107		XUC15FP	E RING	4	
108		XUC25FP	E RING	2	
109		XWGV3D6G	WASHER	2	

FRONT PANEL ASSEMBLY (AU-65-P, AU-65-E)

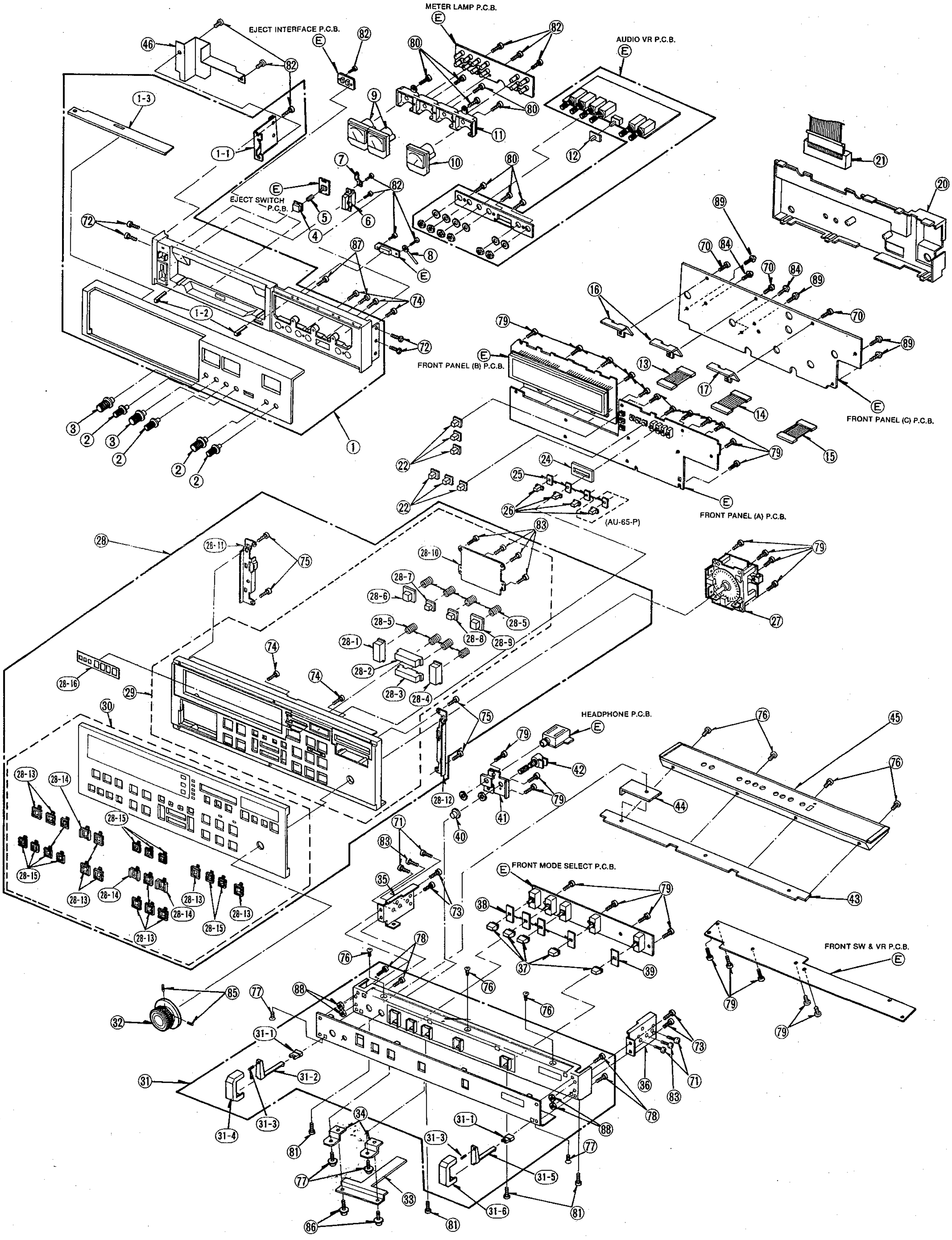
METER LAMP P.C.B.
EJECT INTERFACE P.C.B.
AUDIO VR P.C.B.
EJECT SWITCH P.C.B.
FRONT PANEL (B) P.C.B.
FRONT PANEL (C) P.C.B.
FRONT PANEL (A) P.C.B.
(AU-65-P)
HEADPHONE P.C.B.
FRONT MODE SELECT P.C.B.
FRONT SW & VR P.C.B.
Ⓔ
①
1-1
1-2
1-3
②
③
④
⑤
⑥
⑦
⑧
⑨
⑩
⑪
⑫
⑬
⑭
⑮
⑯
⑰
⑳
㉑
㉒
㉔
㉕
㉖
㉗
㉘
28-1
28-2
28-3
28-4
28-5
28-6
28-7
28-8
28-9
28-10
28-11
28-12
28-13
28-14
28-15
28-16
㉙
㉚
㉛
31-1
31-2
31-3
31-4
31-5
31-6
㉜
㉝
㉞
㉟
㊱
㊲
㊳
㊴
㊵
㊶
㊷
㊸
㊹
㊺
㊻
(70)
(71)
(72)
(73)
(74)
(75)
(76)
(77)
(78)
(79)
(80)
(81)
(82)
(83)
(84)
(85)
(86)
(87)
(88)
(89)

FRONT PANEL ASSEMBLY (AU-65-P, AU-65-E)

Ref.No.		Part No.	Part Name & Description	Pcs	Remarks
1		VYP2975	UPPER FRONT PANEL (1) UNIT	1	
1-1		VMP1006	GND ANGLE	1	
1-2		VGK1511	CASSETTE GUIDE	2	
1-3		VMP0830	FRONT (U) PROTECTOR ANGLE	1	
2		VXU0768	VR KNOB (S)	4	
3		VXU0766	VR KNOB (B)	2	
4		VGU3394	EJECT BUTTON	1	
5		VMB1730	EJECT BUTTON SPRING	1	
6		EST15372T	POWER SWITCH	1	AU-65-P
6		EST15367S	POWER SWITCH	1	AU-65-E
7		VMP1008	EJECT SWITCH ANGLE	1	
8		VJR3	CLUMPER	1	
9		VSE0101	AUDIO METER	2	
10		VSE0109	TRACKING METER	1	
11		VGQ1051	METER COVER	1	
12		VGU2085	SWITCH KNOB	1	
13		VEE3171	CONNECTOR CABLE	1	
14		VEE3170	CONNECTOR CABLE	1	
15		VEE3799	CONNECTOR CABLE	1	
16		VMP0964	P.C.B. SUPPORT ANGLE (A)	2	
17		VMP1926	P.C.B. SUPPORT ANGLE (B)	1	
20		VMZ1160	FRONT BOARD CAVER	1	
21		VEE3224	20P FLAT CABLE	1	
22		VGU4359	RESET BUTTON	6	
24		VMX1328	SLIDE SWITCH SPACER	1	
25		VGH0520	SWITCH COVER	4	3pcs: AU-65-E
26		VGU2089	SLIDE SWITCH KNOB	4	3pcs: AU-65-E
27		VSR0083	SEARCH DIAL	1	
28		VYP2194	FRONT PANEL (M) 1 UNIT	1	AU-65-P
28		VYP3530	FRONT PANEL (M) 1 UNIT	1	AU-65-E
28-1		VGU4117	EDIT IN BUTTON	1	
28-2		VGU4116	EDIT SET BUTTON	1	
28-3		VGU4115	GO-TO BUTTON	1	
28-4		VGU4118	EDIT OUT BUTTON	1	
28-5		VMB1799	SPRING	8	
28-6		VGU4119	AUDIO IN BUTTON	1	
28-7		VGU4114	TRIM (-) BUTTON	1	
28-8		VGU4113	TRIM (+) BUTTON	1	
28-9		VGU4120	AUDIO OUT BUTTON	1	
28-10		VMP1529	EDIT BUTTON GUIDE	1	
28-11		VMP0562	PANEL HOLDER ANGLE (L)	1	
28-12		VMP0561	PANEL HOLDER ANGLE (R)	1	
28-13		VGK1595	SWITCH GUARD	11	
28-14		VGF0206	SWITCH GUARD	3	
28-15		VGK1512	SWITCH GUARD	10	
28-16		VGH1492	TC BUTTON NAME PLATE	1	AU-65-P
28-16		VGH2627	TC BUTTON NAME PLATE	1	AU-65-E
29		VYP2203	FRONT PANEL (M) 2 UNIT	1	
30		VYP2204	FRONT ALMINUM PANEL UNIT	1	AU-65-P
30		VYP3529	FRONT ALMINUM PANEL UNIT	1	AU-65-E
31		VYP2977	CONTROL PANEL (1) UNIT	1	
31-1		VGF0147	HANDLE COVER	2	
31-2		VML1657	LOCK RELEASE LEAVER (L)	1	
31-3		VMB1333	SPRING	2	
31-4		VKH0111	HANDLE (L)	1	
31-5		VML1656	LOCK RELEASE LEVER (R)	1	
31-6		VKH0110	HANDLE (R)	1	
32		VXU0767	SEARCH DIAL KNOB UNIT	1	
33		VMP0861	PULL GUIDE ANGLE	1	
34		VMP1061	PULL GUIDE HOLDER ANGLE	2	
35		VMP1057	RAIL HOLDER ANGLE (L)	1	
36		VMP1056	RAIL HOLDER ANGLE (R)	1	
37		VGU2080	SWITCH KNOB	5	
38		VMZ0655	SWITCH SHEET	4	
39		VMZ1194	SWITCH SHEET	1	
40		VGU3121	HEADPHONE VR KNOB	1	
41		VMP0589	HEADPHONE MOUNT ANGLE	1	
42		EWJD5AP15A14	HEADPHONE VOLUME	1	AU-65-P
42		EWGGOAP15A14	HEADPHONE VOLUME	1	AU-65-E
43		VMP0587	PANEL HOLDER ANGLE	1	
44		VMP0932	GND ANGLE	1	
45		VYP2978	CONTROL PANEL (2) UNIT	1	AU-65-P
45		VYP3531	CONTROL PANEL (2) UNIT	1	AU-65-E
46		VMZ1637	AC SWITCH BARRIER	1	
70		XSB3+5S	SCREW	3	
71		XSB3+6S	SCREW	4	
72		XSB3+8FZS	SCREW	4	
73		XSB3+8S	SCREW	4	
74		XSN3+6S	SCREW	5	
75		XSN3+8S	SCREW	4	
76		XSS3+6FCS	SCREW	7	
77		XSS3+8FCS	SCREW	4	
78		XSS3+10S	SCREW	4	
79		XTN4+10G	SCREW	28	
80		XTN4+10J	SCREW	8	
81		XTS3+8GFC	SCREW	4	
82		XTV3+8J	SCREW	11	
83		XTV3+10J	SCREW	2	
84		XTV4+15G	SCREW	2	
85		XXEV3W6FPS	HEX SCREW	2	
86		XYN3+F5S	SCREW	2	
87		XYN3+C18S	SCREW	2	
88		XNG3ES	NUT	4	
89		XTV4+20G	SCREW	4	
90		XTV3+8G	SCREW	4	

FRONT PANEL ASSEMBLY (AU-63-P, AU-63-E, AU-62-P, AU-62-E)

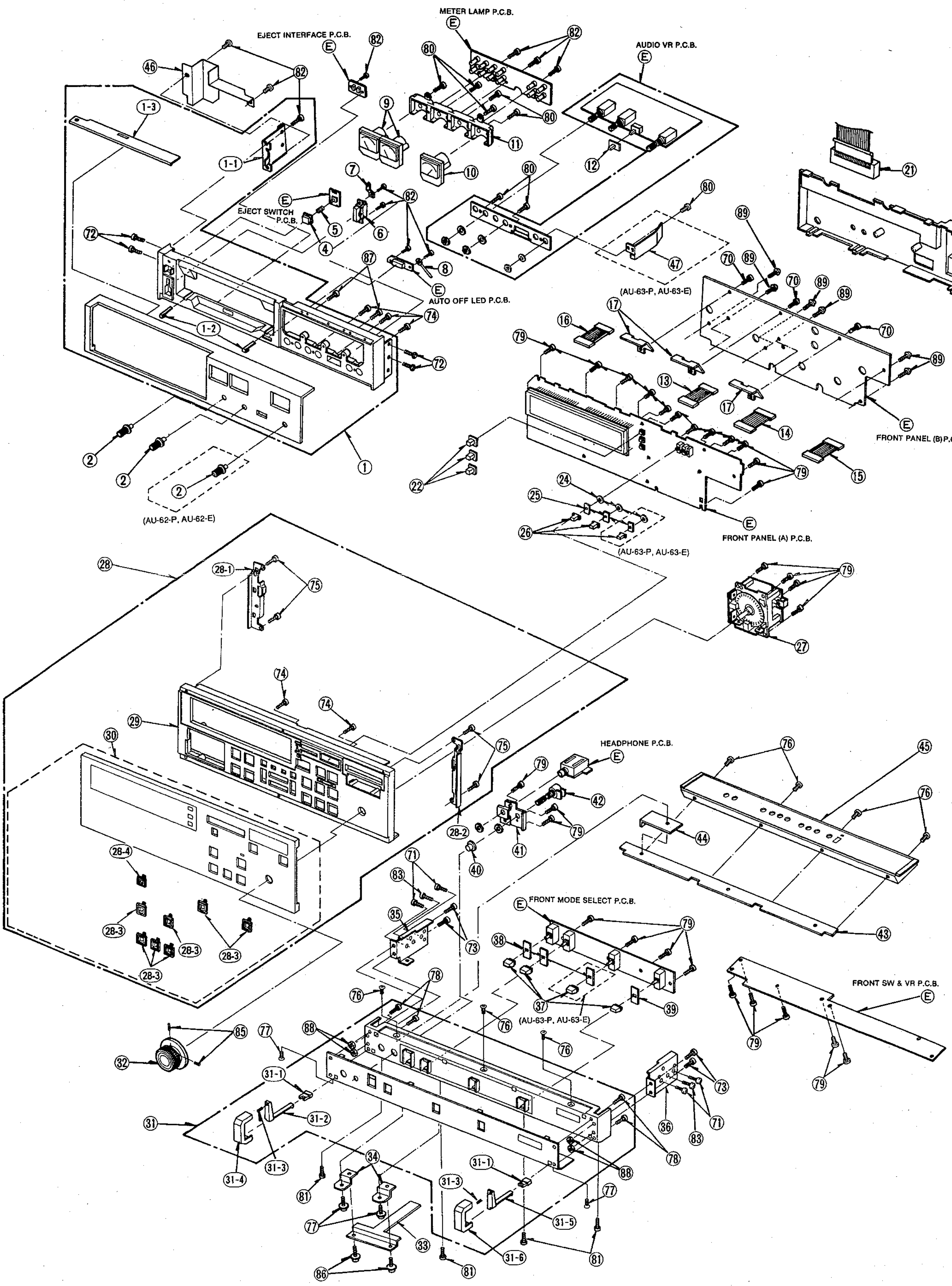
METER LAMP P.C.B.
EJECT INTERFACE P.C.B.
AUDIO VR P.C.B.
EJECT SWITCH P.C.B.
AUTO OFF LED P.C.B.
(AU-63-P, AU-63-E)
FRONT PANEL (B) P.C.B.
FRONT PANEL (A) P.C.B.
(AU-62-P, AU-62-E)
HEADPHONE P.C.B.
FRONT MODE SELECT P.C.B.
FRONT SW & VR P.C.B.
E
1
1-1
1-2
1-3
2
4
5
6
7
8
9
10
11
12
13
14
15
16
17
20
21
22
24
25
26
27
28
28-1
28-2
28-3
28-4
29
30
31
31-1
31-2
31-3
31-4
31-5
31-6
32
33
34
35
36
37
38
39
40
41
42
43
44
45
46
47
70
71
72
73
74
75
76
77
78
79
80
81
82
83
85
86
87
88
89

FRONT PANEL ASSEMBLY (AU-63-P, AU-63-E, AU-62-P, AU-62-E)

Ref.No.		Part No.	Part Name & Description	Pcs	Remarks
1		VYP3221	UPPER FRONT PANEL (1) UNIT	1	AU-63-P,AU-63-E
1		VYP3134	UPPER FRONT PANEL (1) UNIT	1	AU-62-P,AU-62-E
1-1		VMP1006	GND ANGLE	1	
1-2		VGK1511	CASSETTE GUIDE	2	
1-3		VMP0830	FRONT (U) PROTECTOR ANGLE	1	
2		VXU0768	VR KNOB (S)	3	2pcs: AU-63-P,AU-63-E
4		VGU3394	EJECT BUTTON	1	
5		VMB1730	EJECT BUTTON SPRING	1	
6		EST15372T	POWER SWITCH	1	AU-63-P,AU-62-P
6		EST15367S	POWER SWITCH	1	AU-63-E,AU-62-E
7		VMP1008	EJECT SWITCH ANGLE	1	
8		VJR3	CLUMPER	1	
9		VSE0101	AUDIO METER	2	
10		VSE0112	TRACKING METER	1	
11		VGQ1051	METER COVER	1	
12		VGU2085	SWITCH KNOB	1	
13		VEE5375	CONNECTOR CABLE	1	
14		VEE5374	CONNECTOR CABLE	1	
15		VEE5373	CONNECTOR CABLE	1	
16		VEE5376	CONNECTOR CABLE	1	
17		VMP1926	P.C.B. SUPPORT ANGLE (B)	3	
20		VMZ1160	FRONT BOARD CAVER	1	
21		VEC0682	20P FLAT CABLE	1	
22		VGU4359	RESET BUTTON	3	
24		VMX1072	SLIDE SWITCH SPACER	3	2pcs: AU-63-P,AU-62-P
25		VGH0520	SWITCH COVER	3	2pcs: AU-63-P,AU-62-P
26		VGU2089	SLIDE SWITCH KNOB	3	2pcs: AU-63-P,AU-62-P
27		VSR0083	SEARCH DIAL	1	
28		VYP2863	FRONT PANEL (M) 1 UNIT	1	AU-63-P,AU-62-P
28		VYP3528	FRONT PANEL (M) 1 UNIT	1	AU-63-E,AU-62-E
28-1		VMP0562	PANEL HOLDER ANGLE (L)	1	
28-2		VMP0561	PANEL HOLDER ANGLE (R)	1	
28-3		VGK1595	SWITCH GUARD	7	
28-4		VGK1512	SWITCH GUARD	1	
29		VYP2138	FRONT PANEL (M) 2 UNIT	1	
30		VYP2865	FRONT ALMINUM PANEL UNIT	1	AU-63-P,AU-62-P
30		VYP3527	FRONT ALMINUM PANEL UNIT	1	AU-63-E,AU-62-E
31		VYP3145	CONTROL PANEL (1) UNIT	1	AU-63-P,AU-63-E
31		VYP3136	CONTROL PANEL (1) UNIT	1	AU-62-P,AU-62-E
31-1		VGF0147	HANDLE COVER	2	
31-2		VML1657	LOCK RELEASE LEAVER (L)	1	
31-3		VMB1333	SPRING	2	
31-4		VKH0111	HANDLE (L)	1	
31-5		VML1656	LOCK RELEASE LEVER (R)	1	
31-6		VKH0110	HANDLE (R)	1	
32		VXU0767	SEARCH DIAL KNOB UNIT	1	
33		VMP0861	PULL GUIDE ANGLE	1	
34		VMP1061	PULL GUIDE HOLDER ANGLE	2	
35		VMP1057	RAIL HOLDER ANGLE (L)	1	
36		VMP1056	RAIL HOLDER ANGLE (R)	1	
37		VGU2080	SWITCH KNOB	4	3pcs: AU-62-P,AU-62-E
38		VMZ0655	SWITCH SHEET	3	2pcs: AU-62-P,AU-62-E
39		VMZ1194	SWITCH SHEET	1	
40		VGU3121	HEADPHONE VR KNOB	1	
41		VMP0589	HEADPHONE MOUNT ANGLE	1	
42		EWJD5AP15A14	HEADPHONE VOLUME	1	AU-63-P,AU-62-P
42		EWGG0AP15A14	HEADPHONE VOLUME	1	AU-63-E,AU-62-E
43		VMP0587	PANEL HOLDER ANGLE	1	
44		VMP0932	GND ANGLE	1	
45		VYP2978	CONTROL PANEL (2) UNIT	1	AU-63-P,AU-62-P
45		VYP3531	CONTROL PANEL (2) UNIT	1	AU-63-E,AU-62-E
46		VMZ1637	AC SWITCH BARRIER	1	
47		VMP2910	VR P.C.B. HOLDER ANGLE	1	AU-63-P,AU-63-E
70		XSB3+5S	SCREW	3	
71		XSB3+6S	SCREW	4	
72		XSB3+8FZS	SCREW	4	
73		XSB3+8S	SCREW	4	
74		XSN3+6S	SCREW	5	
75		XSN3+8S	SCREW	4	
76		XSS3+6FCS	SCREW	7	
77		XSS3+8FCS	SCREW	4	
78		XSS3+10S	SCREW	4	

Ref.No.		Part No.	Part Name & Description	Pcs	Remarks
79		XTN4+10G	SCREW	28	
80		XTN4+10J	SCREW	8	
81		XTS3+8GFC	SCREW	4	
82		XTV3+8J	SCREW	11	
83		XTV3+10J	SCREW	2	
85		XXEV3W6FPS	HEX SCREW	2	
86		XYN3+F5S	SCREW	2	
87		XYN3+C18S	SCREW	2	
88		XNG3ES	NUT	4	
89		XTV4+20G	SCREW	6	

REAR JACK PANEL ASSEMBLY

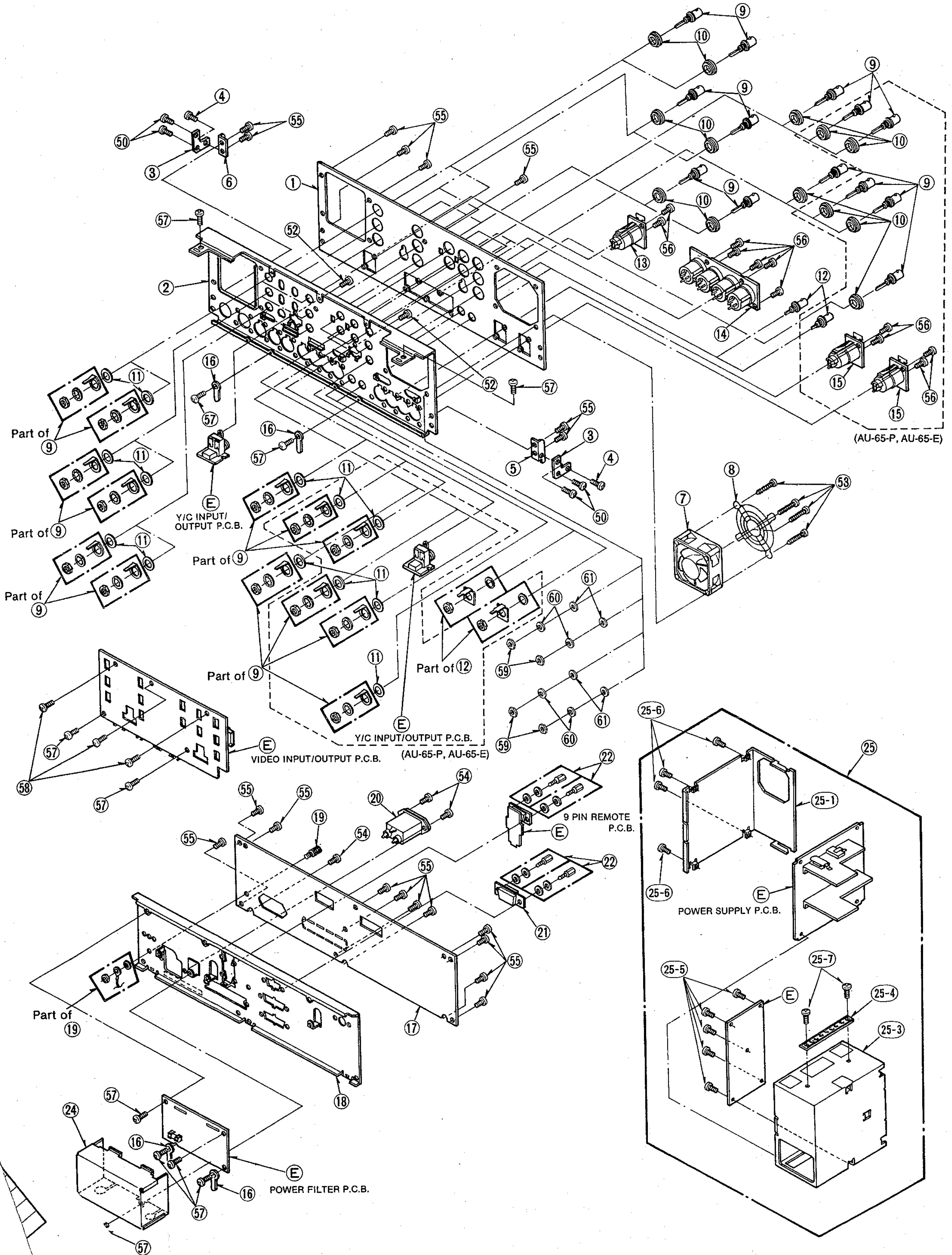
⑨
⑩
④
㊿
③
⑥
(55)
①
(57)
(52)
②
⑬
(56)
⑭
⑫
⑮
⑯
⑪
Part of ⑨
Ⓔ
Y/C INPUT/ OUTPUT P.C.B.
⑤
⑦
⑧
(53)
(60)
(61)
(59)
Part of ⑫
Y/C INPUT/OUTPUT P.C.B.
(AU-65-P, AU-65-E)
VIDEO INPUT/OUTPUT P.C.B.
(58)
(54)
⑳
⑲
㉒
9 PIN REMOTE P.C.B.
㉑
⑰
⑱
Part of ⑲
㉔
POWER FILTER P.C.B.
(25-6)
㉕
(25-1)
POWER SUPPLY P.C.B.
(25-5)
(25-7)
(25-4)
(25-3)

REAR JACK PANEL ASSEMBLY

Ref.No.		Part No.	Part Name & Description	Pcs	Remarks
1		VGH2284	JACK NAME PLATE (UPPER)	1	AU-65-P,AU-65-E
1		VGH2389	JACK NAME PLATE (UPPER)	1	AU-63-P,AU-63-E, AU-62-P,AU-62-E
2		VJH0583	JACK PLATE (UPPER)	1	
3		VMP1007	JACK ROTARY PLATE	2	
4		VHD0325	JACK ANGLE SCREW	2	
5		VMP0994	JACK ROTARY ANGLE (L)	1	
6		VMP0960	JACK ROTARY ANGLE (R)	1	
7		VRF0061	FUN MOTOR	1	
8		VGF0335	FUN MOTOR COVER	1	
9		VJS1087	BNC CONNECTOR	13	8pcs: AU-63-P,AU-63-E AU-62-P,AU-62-E
10		VMZ0631	BNC NUT	13	8pcs: AU-63-P,AU-63-E AU-62-P,AU-62-E
11		VMZ0630	WASHER	13	8pcs: AU-63-P,AU-63-E AU-62-P,AU-62-E
12		VJJ0091	BNC CONNECTOR	2	1pcs: AU-63-P,AU-63-E AU-62-P,AU-62-E
13		VJP1894	XLR CONNECTOR	1	
14		VJP2524	XLR (4PC) CONNECTOR	1	
15		VJS2614	XLR CONNECTOR	2	AU-65-P,AU-65-E
16		VJR3	CLUMPER	4	
17		VGH2285	JACK NAME PLATE (LOWER)	1	AU-65-P,AU-63-P, AU-62-P
17		VGH2551	JACK NAME PLATE (LOWER)	1	AU-65-E,AU-63-E, AU-62-E
18		VJH0584	JACK PLATE (LOWER)	1	
19		VJH0082	GND TERMINAL	1	
20		VJP0083	AC INLET	1	
21		VEE6377	15P REMOTE CONNECTOR	1	
22		VXQ0102	HEX A BASS	4	
24		VMZ1597	POWER FILTER COVER	1	
25		VYK3004	POWER UNIT	1	NTSC
25		VYK3637	POWER UNIT	1	PAL
25-1		VMP2698	COVER	1	
25-3		VMP2696	FRAME	1	
25-4		VKH0230	HANDLE	1	
25-5		XYNV3+K8S	SCREW	4	
25-6		XTV3+8F	SCREW	4	
25-7		XYN4+F8S	SCREW	2	
50		XYN3+C6S	SCREW	4	
52		XSN3+6FZS	SCREW	2	
53		XSN4+35FCS	SCREW	4	
54		XSB3+8FZS	SCREW	3	
55		XTB3+6FFZ	SCREW	14	
56		XTN26+6FFY	SCREW	11	
57		XTV3+6F	SCREW	10	
58		XYE3+EF8	SCREW	3	
59		XNG4ES	NUT	4	
60		XWA4B	SPRING WASHER	4	
61		XWG4	WASHER	4	

CHASSIS FRAME ASSEMBLY

Ref.No.		Part No.	Part Name & Description	Pcs	Remarks
1		VMP2607	SIDE FRAME (L)	1	
2		VMP0842	TOP MOUNT PLATE (L)	1	
3		VMP0616	CHASSIS FRAME (L)	1	
4		VYQ0013	RAIL UNIT	2	
5		VMP2616	JACK MOUNT ANGLE (BOTTOM)	2	
6		VYQ0252	ROTARY ANGLE (L) UNIT	1	
7		VGQ2025	B BOARD GUIDE RAIL	2	
8		VMP2596	POWER MOUNT ANGLE	1	
9		VMP2612	POWER FRAME	1	
10		VRF0061	FUN MOTOR	1	
11		VGF0335	FUN MOTOR COVER	1	
12		VJF0022	M CLUMPER	11	
13		VMP2610	GUIDE FRAME (M)	1	
14		VMP0618	CHASSIS FRAME (M)	1	
15		VMP2783	TC BOARD STOPPER ANGLE	1	
16		VMP2693	FOOT MOUNT ANGLE	1	
17		VGQ1050	PULL GUIDE	1	
18		VKA0027	FOOT	4	
19		VMP2613	B BOARD COVER	1	
20		VMP2614	FRONT FRAME	1	
21		VMP2598	P.C.B. MOUNT ANGLE (B)	1	
22		VMP0617	CHASSIS FRAME (R)	1	
23		VMP2608	CENTER FRAME	1	
24		VXA3967	B P.C.B. SHIELD PLATE	1	
25		VMP2620	W MOTHER P.C.B. ANGLE	2	
26		VJR3	CLUMPER	1	
27		VMX1314W075	FREE BUSHING	1	
28		VGQ2024	W BOARD GUIDE RAIL	2	
29		VMP2611	GUIDE FRAME (S)	1	
30		VHN0011	LATCH	4	
31		VGH2288	SUB FRONT PANEL	1	AU-65-P
31		VGH2549	SUB FRONT PANEL	1	AU-65-E
31		VGH2401	SUB FRONT PANEL	1	AU-63-P,AU-62-P
31		VGH2550	SUB FRONT PANEL	1	AU-63-E,AU-62-E
32		VYQ0251	ROTARY ANGLE (R) UNIT	1	
33		VMP2739	AT BOARD MOUNT ANGLE	1	AU-63-P,AU-63-E
			(BOTTOM)		
34		VMP0610	SIDE FRAME (R)	1	
35		VMP2615	FUN MOTOR MOUNT ANGLE	1	
36		VMP2594	TOP MOUNT PLATE (R)	1	
37		VMX1841	P.C.B. CUSHION (W)	1	
38		VMX1558	WASHER	4	
39		VMP0692	GUIDE FRAME MOUNT ANGLE	1	
40		VMP0683	GUIDE FRAME (L2)	1	
41		VMP2609	GUIDE FRAME (L)	1	
42		VMP1525	GUIDE FRAME (L) PROTECTOR	1	
			ANGLE		
43		VMZ1590	CUT SHEET (BIG)	1	
44		VMZ1591	CUT SHEET (SMALL)	1	
45		VMX1314W146	FREE BUSHING	1	
46		VMP2617	W MOTHER P.C.B. ANGLE (F)	1	
47		VMP2618	W MOTHER P.C.B. ANGLE (C)	1	
48		VMP2619	W MOTHER P.C.B. ANGLE (B)	1	
49		VSC2341	SHIELD CASE LID	1	
50		VMP0972	P.C.B. MOUNT ANGLE	1	
51		VMP2600	SWITCH ANGLE	1	
54		VMX1184	FREE BUSHING	1	
80		XSB3+5S	SCREW	4	
81		XSB3+6S	SCREW	12	
82		XSN4+35FCS	SCREW	4	
83		XSS3+5S	SCREW	2	
84		XTB3+6F	SCREW	4	
85		XTV3+6F	SCREW	72	
86		XTV3+6FR	SCREW	19	
87		XTV3+8J	SCREW	4	
88		XYN3+C6S	SCREW	4	
89		XYN4+C14S	SCREW	4	
90		XYN4+F6S	SCREW	4	
91		XYNV3+K6FR	SCREW	4	
100		VMP2738	HOLDER ANGLE	1	
101		VSC2299	SHIELD CAVER	1	
102		XTV3+6F	SCREW	2	
103		XTV3+6F	SCREW	1	

CHASSIS FRAME ASSEMBLY

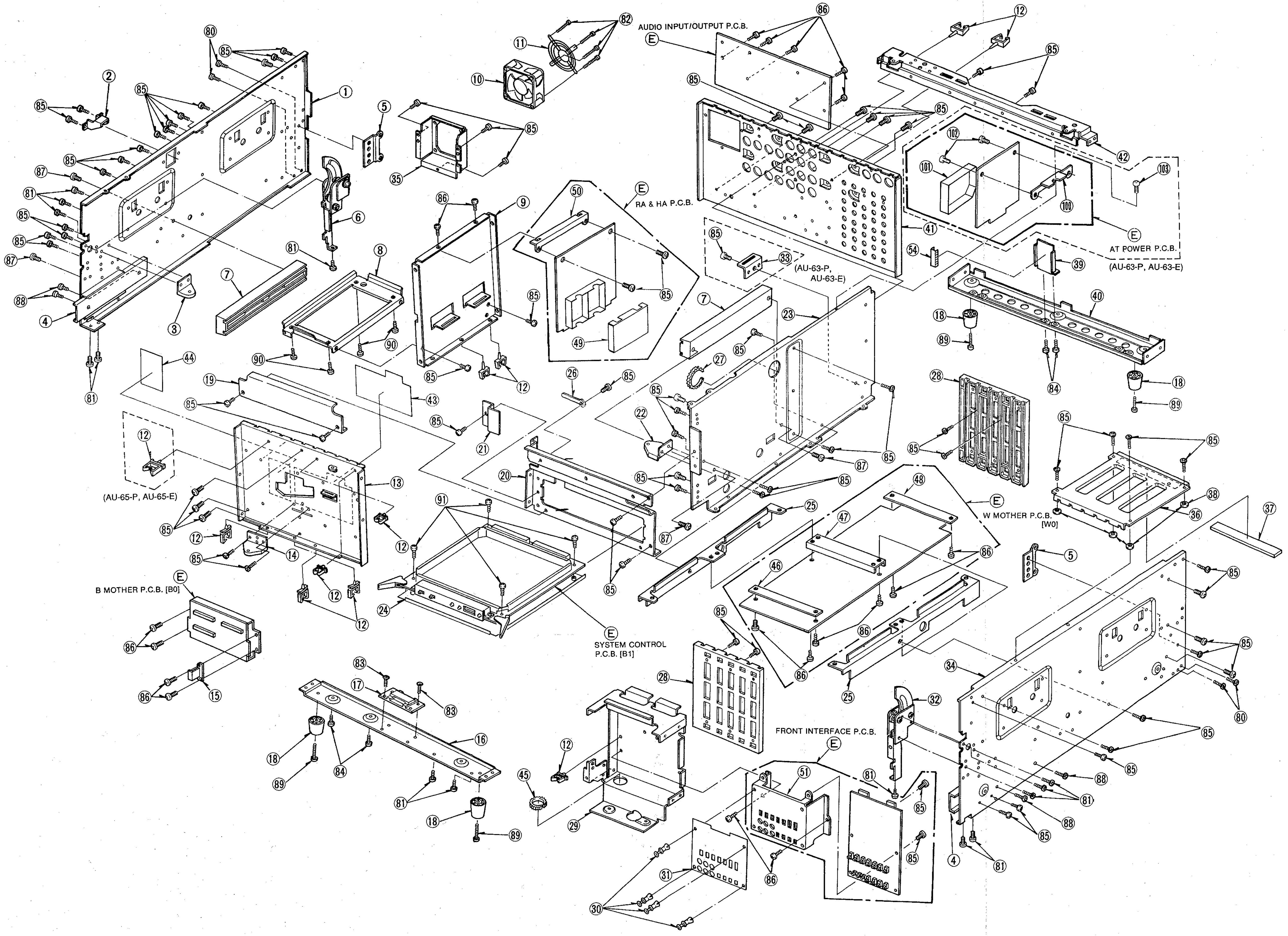
AUDIO INPUT/OUTPUT P.C.B.
E
RA & HA P.C.B.
E
AT POWER P.C.B.
E
(AU-63-P, AU-63-E)
(AU-63-P, AU-63-E)
(AU-65-P, AU-65-E)
W MOTHER P.C.B. [W0]
E
B MOTHER P.C.B. [B0]
E
SYSTEM CONTROL P.C.B. [B1]
E
FRONT INTERFACE P.C.B.
E
①
②
③
④
⑤
⑥
⑦
⑧
⑨
⑩
⑪
⑫
⑬
⑭
⑮
⑯
⑰
⑱
⑲
⑳
㉑
㉒
㉓
㉔
㉕
㉖
㉗
㉘
㉙
㉚
㉛
㉜
㉝
㉞
㉟
㊱
㊲
㊳
㊴
㊵
㊶
㊷
㊸
㊹
㊺
㊻
㊼
㊽
㊾
㊿
(51)
(54)
(80)
(81)
(82)
(83)
(84)
(85)
(86)
(87)
(88)
(89)
(90)
(91)
(100)
(101)
(102)
(103)

CASSETTE COMPARTMENT ASSEMBLY

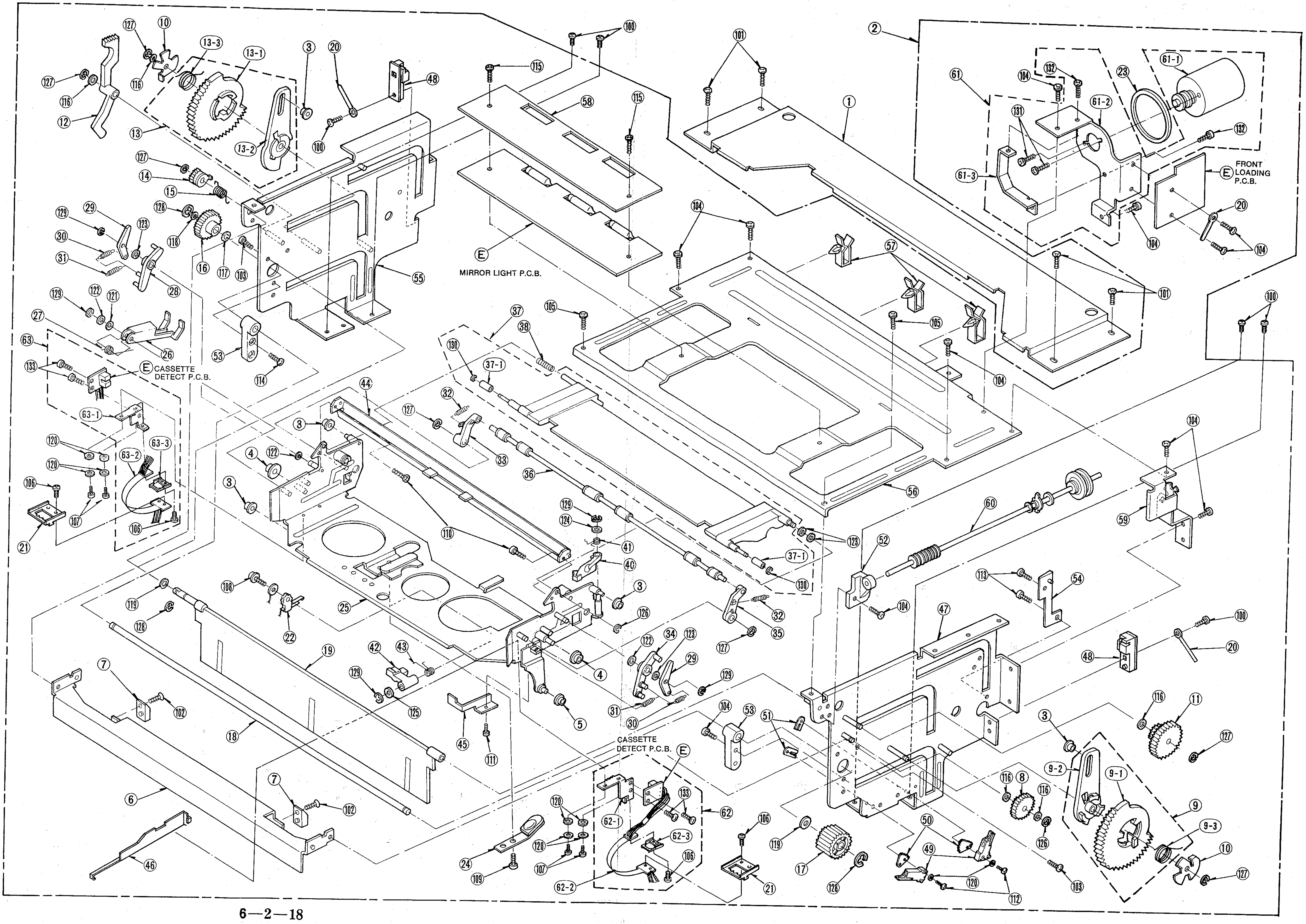

FRONT LOADING P.C.B.
MIRROR LIGHT P.C.B.
CASSETTE DETECT P.C.B.
CASSETTE DETECT P.C.B.
E
1
2
3
4
5
6
7
8
9
9-1
9-2
9-3
10
11
12
13
13-1
13-2
13-3
14
15
16
17
18
19
20
21
22
23
24
25
26
27
28
29
30
31
32
33
34
35
36
37
37-1
38
40
41
42
43
44
45
46
47
48
49
50
51
52
53
54
55
56
57
58
59
60
61
61-1
61-2
61-3
62
62-1
62-2
62-3
63
63-1
63-2
63-3
100
101
102
103
104
105
106
107
108
109
110
111
112
113
114
115
116
117
118
119
120
121
122
123
124
125
126
127
128
129
130
131
132
133

CASSETTE COMPARTMENT ASSEMBLY

Ref.No.		Part No.	Part Name & Description	Pcs	Remarks
1		VMA6661	CARRIAGE MOUNT PLATE	1	
2		VXA3756	FRONT LOADING UNIT	1	
3		VDP1020	GUIDE ROLLER (A)	5	
4		VDP1021	GUIDE ROLLER (B)	2	
5		VDP1022	GUIDE ROLLER (C)	1	
6		VMA6639	FRONT GUIDE ANGLE	1	
7		VMD1048	CASSETTE GUIDE	1	
8		VDG0226	RELAY GEAR	1	
9		VXL1315	WIPER (R) UNIT	1	
9-1		VDG0229	WIPER GEAR (R)	1	
9-2		VML1683	WIPER ARM (R)	1	
9-3		VMB1384	WIPER SPRING (R)	1	
10		VMD0748	WIPER SPRING HOLDER	2	
11		VDG0500	WORM GEAR	1	
12		VML1685	PANEL OPENER	1	
13		VXL1922	WIPER (L) UNIT	1	
13-1		VDG0605	WIPER GEAR (L)	1	
13-2		VML2316	WIPER ARM (L)	1	
13-3		VMB1385	WIPER SPRING (L)	1	
14		VDG0231	PANEL GEAR	1	
15		VMB1386	BLINDER PANEL GEAR	1	
16		VDG0603	MAIN SHAFT GEAR (L)	1	
17		VDG0502	MAIN SHAFT GEAR (R)	1	
18		VMS3845	MAIN SHAFT A	1	
19		VYF0589	BLINDER PANEL	1	
20		VJR3	CLAMPER	3	
21		VMD1383	FLAT CABLE HOLDER (LOWER)	2	
22		VSH0034	LEAF SWITCH	1	
23		VDV0157	LOADING BELT	1	
24		VXL1626	CASSETTE KEEPER UNIT	1	
25		VXA2993	CASSETTE HOLDER	1	
26		VXL2065	CASSETTE OPENER UNIT	1	
27		VMB1547	CASSETTE SPRING	1	
28		VML2151	KICK LEVER (L) UNIT	1	
29		VML1681	KICK DRIVE LEVER	2	
30		VMB1380	KICK DRIVE LEVER SPRING	2	
31		VMB1381	KICK LEVER SPRING	2	
32		VMB1382	PRESS LEVER SPRING	2	
33		VML2149	PRESS LEVER (L)	1	
34		VML2150	KICK LEVER (R) UNIT	1	
35		VML2148	PRESS LEVER (R)	1	
36		VXJ0038	PRESS ROLLER SHAFT UNIT	1	
37		VXA2322	MIRROR UNIT	1	
37-1		VDP1023	MIRROR ROLLER	2	
38		VMB1399	MIRROR SPRING	1	
40		VXL1278	RELEASE LEVER UNIT	1	
41		VMB1383	RELEASE LEVER SPRING	1	
42		VML1845	CASSETTE DETECT LEVER	1	
43		VMB1548	CASSETTE DETECT SPRING	1	
44		VMA7000	PRESS ROLLER SHAFT STOPPER	1	
45		VMA7172	FIXING ANGLE	1	
46		VMD1109	CASSETTE GUIDE (R)	1	
47		VXA2317	RIGHT SIDE PLATE (1) UNIT	1	
48		VEK2414	PHOTO TR UNIT	2	
49		VSM0048	SWITCH	2	
50		VMA6663	SWITCH ADJUSTMENT PLATE	2	
51		VMA6664	SWITCH MOUNT PLATE	2	
52		VMD0747	SHAFT BEARING	1	
53		VMD0746	MAIN SHAFT BEARING	2	
54		VMA6637	RELEASE LEVER HOLDER	1	
55		VXA2319	LEFT SIDE PLATE	1	
56		VMA6643	TOP PLATE	1	
57		VGQ0107	MINI-CLAMPER	3	
58		VMZ0729	MIRROR LIGHT P.C.B. COVER	1	
59		VMA6662	WORM SHAFT MOUNT PLATE	1	
60		VXJ0073	WORM SHAFT (1) UNIT	1	
61		VEM0265	FRONT LOADING MOTOR UNIT	1	
61-1		VEM0228	MOTOR UNIT	1	
61-2		VMA6649	LOADING MOTOR MOUNT ANGLE	1	
61-3		VMA6794	BELT COVER	1	
62		VES0351	CASSETTE DETECT (R) UNIT	1	
62-1		VMA6879	SENSOR ANGLE (R)	1	
62-2		VJB80098	FLAT CABLE (R)	1	
62-3		VMD1382	FLAT CABLE HOLDER (UPPER)	1	
63		VES0352	CASSETTE DETECT (L) UNIT	1	
63-1		VMA6880	SENSOR DETECT (L)	1	
63-2		VJB80099	FLAT CABLE (L)	1	
63-3		VMD1382	FLAT CABLE HOLDER (UPPER)	1	
100		XTV3+8F	SCREW	6	
101		XYN3+F6S	SCREW	4	
102		XTS3+6FFZ	SCREW	2	
103		XYN3+C4S	SCREW	2	
104		XTV3+6F	SCREW	12	
105		XTN3+4F	SCREW	2	
106		XYN2+F5	SCREW	4	
107		XYN2+C4	SCREW	3	
108		XYN2+C6	SCREW	1	
109		XYN26+F4FZ	SCREW	1	
110		XYN26+C4	SCREW	2	
111		XYN2+C3	SCREW	1	
112		XSN2+10	SCREW	2	
113		XSN2+3	SCREW	2	
115		XST3+4RS	SCREW	2	
116		XWGV4D7G	WASHER	5	
117		XWGV5Y9G	WASHER	1	
118		XWGV5F8G	WASHER	1	
119		XWGV5D9G	WASHER	2	
120		XWG2	WASHER	10	
121		XWGV3Z6G	WASHER	1	
122		XWGV3Y6G	WASHER	3	
123		XWGV3D6G	WASHER	4	
124		XWE26	WASHER	1	
125		XWGV3D5G	WASHER	1	
126		XUC25FP	E-RING	2	
127		XUC3FP	E-RING	8	
128		XUC4FP	E-RING	3	
129		XUC2FP	E-RING	5	
130		XUC15FP	E-RING	2	
131		XYN3+C4	SCREW	2	
132		XTV26+5F	SCREW	2	
133		XTV26+4F	SCREW	4	

PACKING

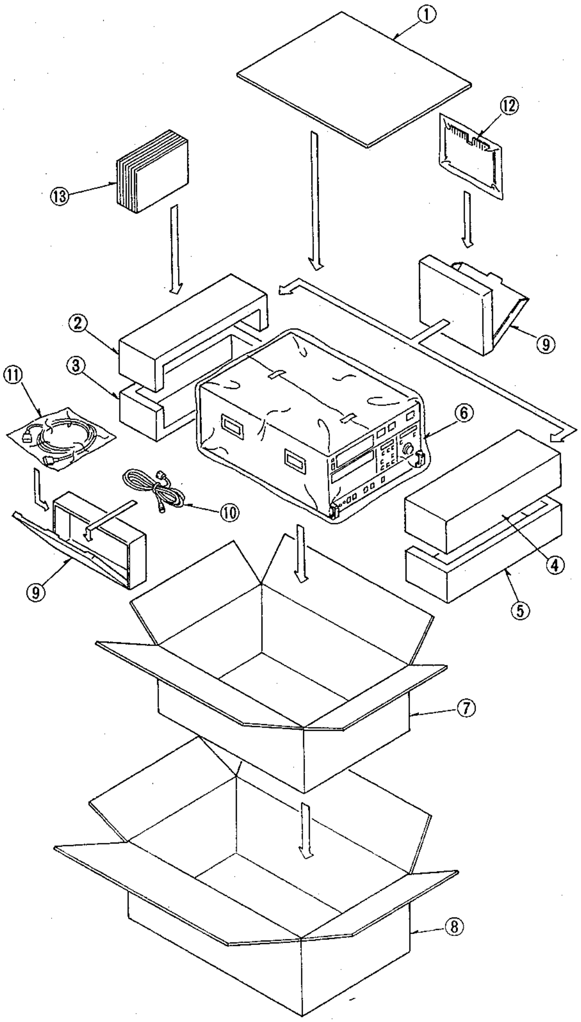

PACKING

Ref.No.		Part No.	Part Name & Description	Pcs	Remarks
1		VPN2698	TOP PAD	1	
2		VPN2665	UPPER REAR CUSHION	1	
3		VPN2697	LOWER REAR CUSHION	1	
4		VPN2664	UPPER FRONT CUSHION	1	
5		VPN2696	LOWER FRONT CUSHION	1	
6		VPF0296	COVER	1	
7		VPG5146	PACKING CASE (IN)	1	
8		VPG5417	PACKING CASE (OUT)	1	
9		VPK1243	ACCESSORIES BOX	1	
10		VJA0472	POWER CODE	1	AU-65-P,AU-63-P,
					AU-62-P
10		VJA0173	POWER CODE (E)	1	AU-65-E,AU-63-E,
					AU-62-E
10		VJA0172	POWER CODE (B)	1	AU-65-E,AU-63-E,
					AU-62-E
10		VJA0258	POWER CODE (A)	1	AU-65-E,AU-63-E,
					AU-62-E
11		VJA0561	9P CABLE	1	
12		VFK0600	EXTENSION BOARD (W)	1	
13		VQT4134	OPERATING INSTRUCTIONS	1	AU-63-E,AU-62-E
			(GERMAN)		
13		VQT4135	OPERATING INSTRUCTIONS	1	AU-63-E,AU-62-E
			(FRRENCH)		
13		VQT4136	OPERATING INSTRUCTIONS	1	AU-63-E,AU-62-E
			(SPANISH)		
13		VQT4137	OPERATING INSTRUCTIONS	1	AU-65-E
			(GERMAN)		
13		VQT4138	OPERATING INSTRUCTIONS	1	AU-65-E
			(FRRENCH)		
13		VQT4139	OPERATING INSTRUCTIONS	1	AU-65-E
			(SPANISH)		

Time Code Generator/Reader

AU-F65

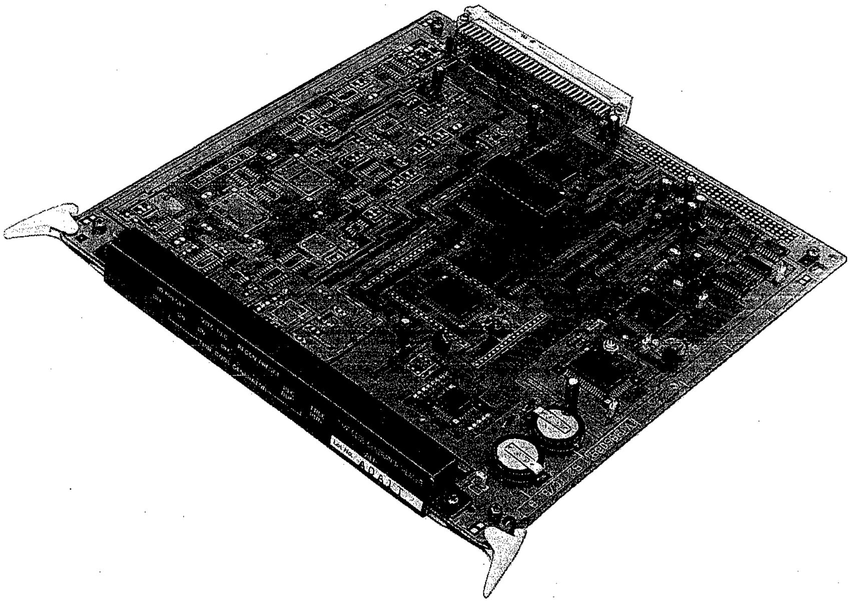

INTRODUCTION

The AU-F65 is a Plug-in Time Code Generator and Reader for use with the AU-65, AU-63 or the AU-62. The AU-F65 provides a precise timing signal, enabling the AU-65, AU-63 and AU-62 to perform highly accurate editing.
This section contains technical information covering the following points, adjustment procedures, block diagrams, schematic diagrams, P.C.Board diagrams, and parts list of the AU-F65.

1.TEST & SERVICE EQUIPMENT

To perform the electrical adjustment completely the following is required.

1. Frequency counter
2. Extension Board.(VFK0601)
3. AU-65, AU-63 or AU-62

2.ADJUSTMENT

2-1. TRIMMER ADJUSTMENT

TEST POINT	MODE	TAPE USED	M.EQ.	INPUT SIGNAL	ADJUSTMENT
TP 6	EJECT	-----	FREQUENCY COUNTER	---------	C19
1. Confirm that the frequency at TP6 is 512.000 ± 0.002Hz. 2. If it is not specification, adjust C19 as mentioned above.			TP6 : 512.000 ± 0.002Hz		

3.CONTROLS AND THEIR FUNCTIONS

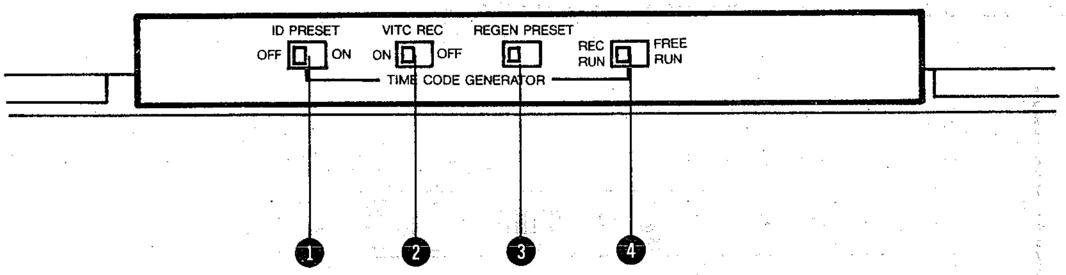

B2 TCG/TCR board

❶ ID PRESET ON/OFF Switch (Shipment mode: OFF)

This switch is used to switch the ID code.
Any frequently-set user bit such as VTR number for example can be set as an original VTR ID code in advance. This ID code can be called upon request.
The following can be switched when the "UB REAL TIME" set-up menu No. 6008 is OFF.

ON: When the VTR is in the STOP mode, the ID code can be set.
When the VTR is in the recording mode, the ID code can be recorded.

OFF: The ID code is not set, and the normal user bits value is set/recorded/displayed.

❷ VITC REC ON/OFF Switch (Shipment mode: ON)

This switch is used to switch the VITC recording mode.
VITC is a time code which can be recorded in the video signal vertical blanking. By recording VITC the time code value can be read at a tape speed lower than ±1/8.

ON: The VITC generated by the internal time code generator is recorded.
The VITC is recorded together with the video signal.

OFF: When VITC is transmitted together with the video input signals, this VITC is recorded. Otherwise, the VITC is not recorded on tape.

❸ REGEN/PRESET Selector Switch (Shipment mode: REGEN)

REGEN: A time code synchronized with an external time code or the time code on the playback tape is generated.

PRESET: Set the switch to this position to directly record a time code generated by the internal generator or an external time code.

For details, refer to page 7 "5-4-3. Setting of the REGEN/PRESET and INT/EXT Switches".

❹ REC RUN/FREE RUN Selector Switch (Shipment mode: REC RUN)

REC RUN: The generator counts a time code value only when the VTR is recording.

FREE RUN: The generator counts a time code value in the same way as a clock, regardless of the operating mode of the VTR.

Cautions for use with Player VTR AU-62/63

- AU-62/63 are designed exclusively for use as a playback VTR, therefore setting/recording of the time code/user bits cannot be performed.
- The AU-62/63 have not the external time code reader, therefore external time code cannot be monitored on the TV monitor.
- The time code regenerated to the tape time code can be output from the Time Code Output Connector, using the following switches.
  1. Set the Regen/Preset Switch to "REGEN".
  2. Set the ID Preset Switch to "OFF".
  Be sure that the user bits value is output as "0" if the switch is set to ON.

4.INSTALLATION

1. Remove the TCG/TCR Circuit-Board Cover on the sub control panel.
2. Install the TCG/TCR Circuit-Board (AU-F65) in the VTR.

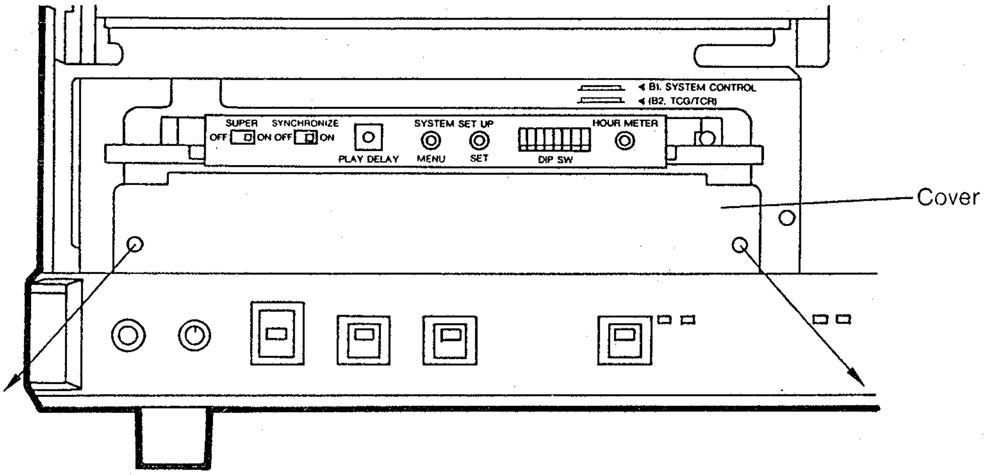
B1. SYSTEM CONTROL
(B2. TCG/TCR)
SUPER
SYNCHRONIZE
OFF ON OFF ON
PLAY DELAY
SYSTEM SET UP
MENU
SET
DIP SW
HOUR METER
Cover

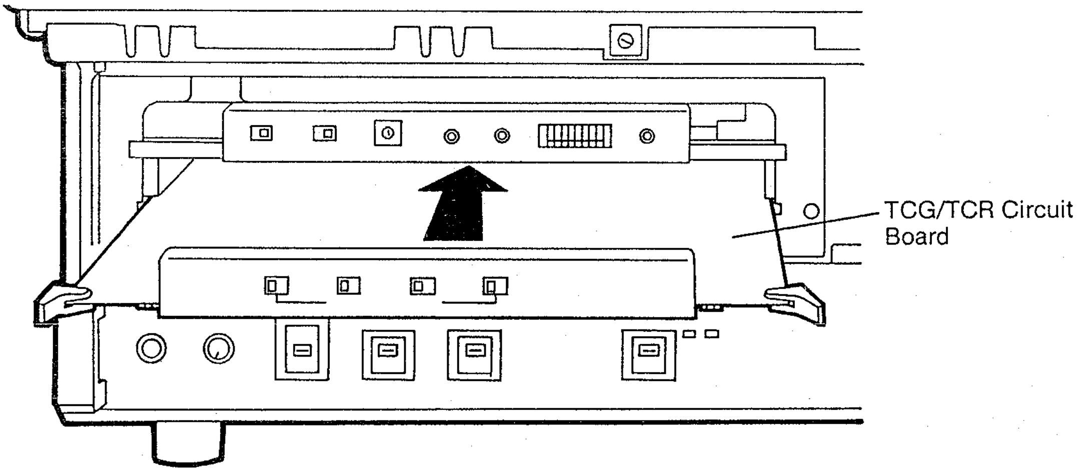
TCG/TCR Circuit Board

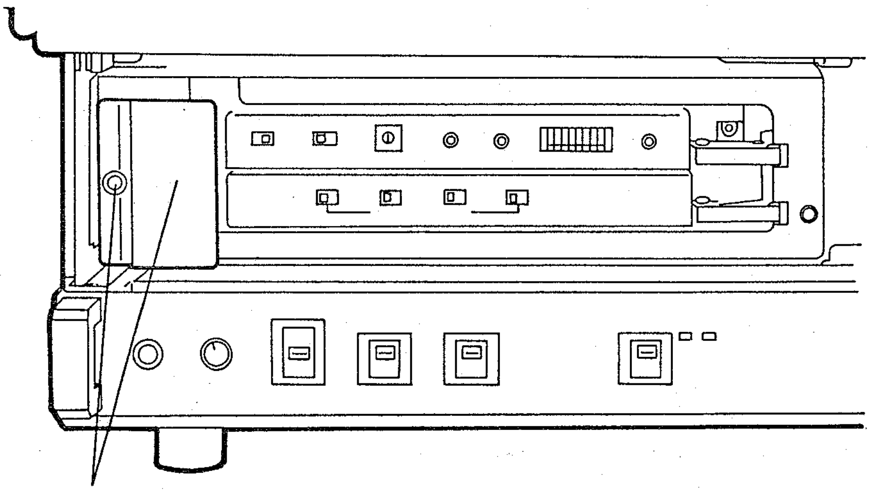

Secure the Board with the supplied fixture.

AU-F65 BLOCK DIAGRAM

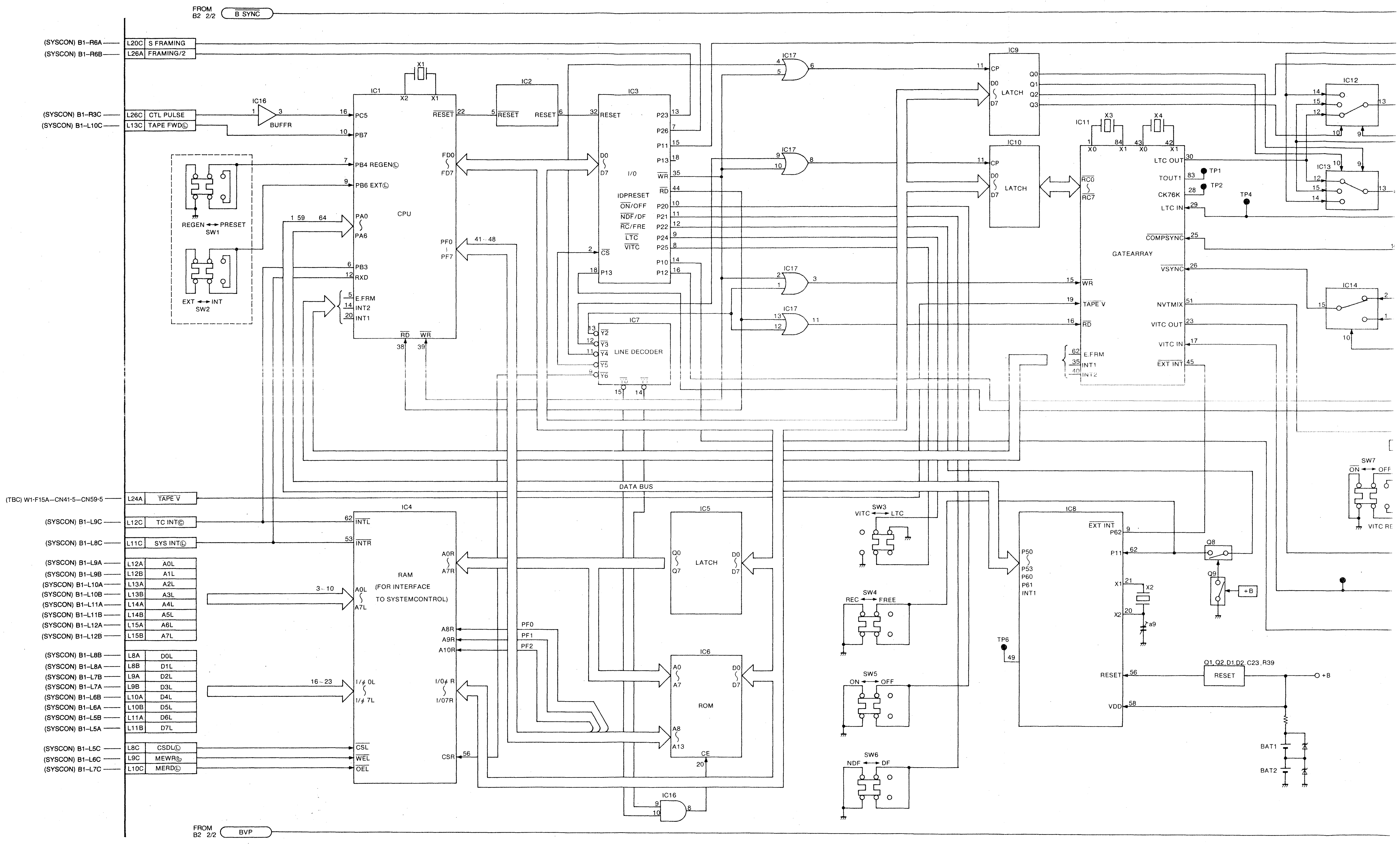

FROM B2 2/2
B SYNC
(SYSCON) B1-R6A
(SYSCON) B1-R6B
L20C S FRAMING
L26A FRAMING/2
(SYSCON) B1-R3C
(SYSCON) B1-L10C
L26C CTL PULSE
L13C TAPE FWD
IC16
BUFFR
REGEN ◄► PRESET
SW1
EXT ◄► INT
SW2
IC1
X1
X2
PC5
PB7
PB4 REGEN
PB6 EXT
PA0
PA6
PB3
RXD
E.FRM
INT2
INT1
RESET
FD0
FD7
PF0
PF7
RD
WR
CPU
41 - 48
IC2
RESET
IC3
RESET
D0
D7
I/O
IDPRESET
ON/OFF
NDF/DF
RC/FRE
LTC
VITC
CS
P13
P23
P26
P11
P13
WR
RD
P20
P21
P22
P24
P25
P10
P12
IC7
LINE DECODER
Y2
Y3
Y4
Y5
Y6
IC17
IC9
CP
D0
D7
LATCH
Q0
Q1
Q2
Q3
IC10
LATCH
IC11
X3
X4
X0
LTC OUT
TOUT1
CK76K
LTC IN
TP1
TP2
TP4
RC0
RC7
COMPSYNC
GATEARRAY
VSYNC
WR
TAPE V
RD
NVTMIX
VITC OUT
VITC IN
EXT INT
E.FRM
INT1
INT2
IC12
IC13
IC14
SW7
ON ◄► OFF
VITC RE
DATA BUS
(TBC) W1-F15A—CN41-5—CN59-5
L24A TAPE V
(SYSCON) B1-L9C
L12C TC INT
(SYSCON) B1-L8C
L11C SYS INT
(SYSCON) B1-L9A
(SYSCON) B1-L9B
(SYSCON) B1-L10A
(SYSCON) B1-L10B
(SYSCON) B1-L11A
(SYSCON) B1-L11B
(SYSCON) B1-L12A
(SYSCON) B1-L12B
L12A A0L
L12B A1L
L13A A2L
L13B A3L
L14A A4L
L14B A5L
L15A A6L
L15B A7L
(SYSCON) B1-L8B
(SYSCON) B1-L8A
(SYSCON) B1-L7B
(SYSCON) B1-L7A
(SYSCON) B1-L6B
(SYSCON) B1-L6A
(SYSCON) B1-L5B
(SYSCON) B1-L5A
L8A D0L
L8B D1L
L9A D2L
L9B D3L
L10A D4L
L10B D5L
L11A D6L
L11B D7L
(SYSCON) B1-L5C
(SYSCON) B1-L6C
(SYSCON) B1-L7C
L8C CSDL
L9C MEWR
L10C MERD
IC4
INTL
INTR
A0L
A7L
RAM
(FOR INTERFACE TO SYSTEMCONTROL)
A0R
A7R
A8R
A9R
A10R
I/O 0L
I/O 7L
I/O R
I/O7R
CSL
WEL
OEL
CSR
3 - 10
16 - 23
PF0
PF1
PF2
IC5
LATCH
Q0
Q7
D0
D7
IC6
ROM
A0
A7
A8
A13
CE
IC16
SW3
VITC ◄► LTC
SW4
REC ◄► FREE
SW5
ON ◄► OFF
SW6
NDF ◄► DF
TP6
IC8
EXT INT
P62
P11
P50
P53
P60
P61
INT1
X1
X2
RESET
VDD
Q8
Q9
+B
Q1, Q2, D1, D2, C23, R39
RESET
BAT1
BAT2
FROM B2 2/2
BVP

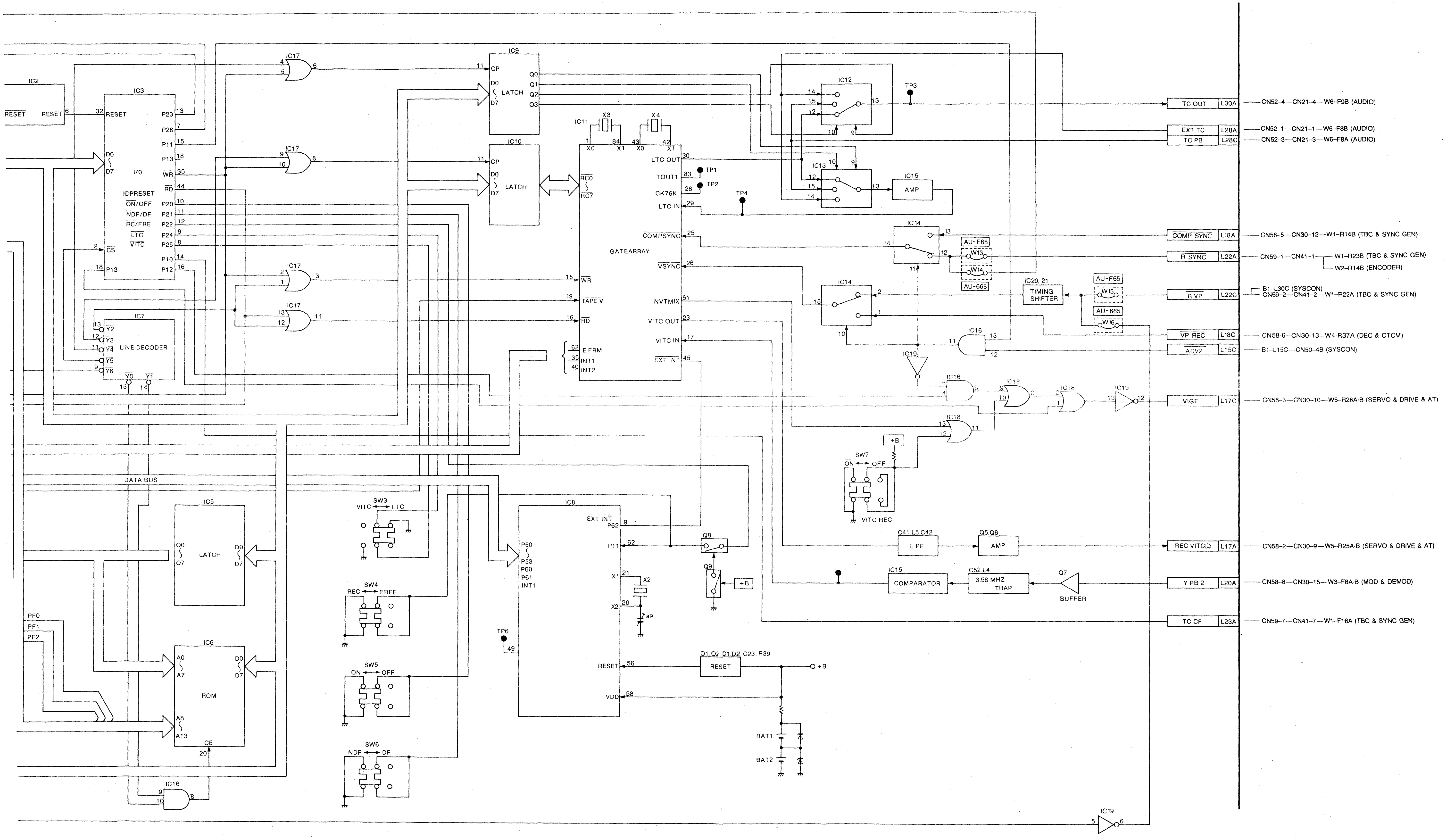
IC2
RESET
IC3
RESET
I/O
IDPRESET
ON/OFF
NDF/DF
RC/FRE
LTC
VITC
CS
P13
P23
P26
P11
P13
WR
RD
P20
P21
P22
P24
P25
P10
P12
IC7
LINE DECODER
IC17
IC9
LATCH
IC10
LATCH
IC11
X3
X4
GATEARRAY
LTC OUT
TOUT1
CK76K
LTC IN
COMPSYNC
VSYNC
NVTMIX
VITC OUT
VITC IN
EXT INT
WR
TAPE V
RD
E.FRM
INT1
INT2
TP1
TP2
TP3
TP4
IC12
IC13
IC15
AMP
IC14
AU-F65
W13
W14
AU-665
IC20, 21
TIMING SHIFTER
W15
W16
IC16
IC19
IC18
+B
SW7
ON OFF
VITC REC
DATA BUS
IC5
LATCH
IC6
ROM
PF0
PF1
PF2
CE
SW3
VITC LTC
SW4
REC FREE
SW5
ON OFF
SW6
NDF DF
IC8
EXT INT
P62
P11
P50
P53
P60
P61
INT1
X1
X2
a9
TP6
RESET
VDD
Q8
Q9
+B
Q1,Q2,D1,D2,C23,R39
RESET
BAT1
BAT2
C41,L5,C42
L PF
Q5,Q6
AMP
IC15
COMPARATOR
C52,L4
3.58 MHZ TRAP
Q7
BUFFER
TC OUT L30A CN52-4—CN21-4—W6-F9B (AUDIO)
EXT TC L28A CN52-1—CN21-1—W6-F8B (AUDIO)
TC PB L28C CN52-3—CN21-3—W6-F8A (AUDIO)
COMP SYNC L18A CN58-5—CN30-12—W1-R14B (TBC & SYNC GEN)
R SYNC L22A CN59-1—CN41-1—W1-R23B (TBC & SYNC GEN)
W2-R14B (ENCODER)
R VP L22C B1-L30C (SYSCON)
CN59-2—CN41-2—W1-R22A (TBC & SYNC GEN)
VP REC L18C CN58-6—CN30-13—W4-R37A (DEC & CTCM)
ADV2 L15C B1-L15C—CN50-4B (SYSCON)
VIGE L17C CN58-3—CN30-10—W5-R26A·B (SERVO & DRIVE & AT)
REC VITCⓁ L17A CN58-2—CN30-9—W5-R25A·B (SERVO & DRIVE & AT)
Y PB 2 L20A CN58-8—CN30-15—W3-F8A·B (MOD & DEMOD)
TC CF L23A CN59-7—CN41-7—W1-F16A (TBC & SYNC GEN)

AU-F65 SCHEMATIC DIAGRAM 1/2

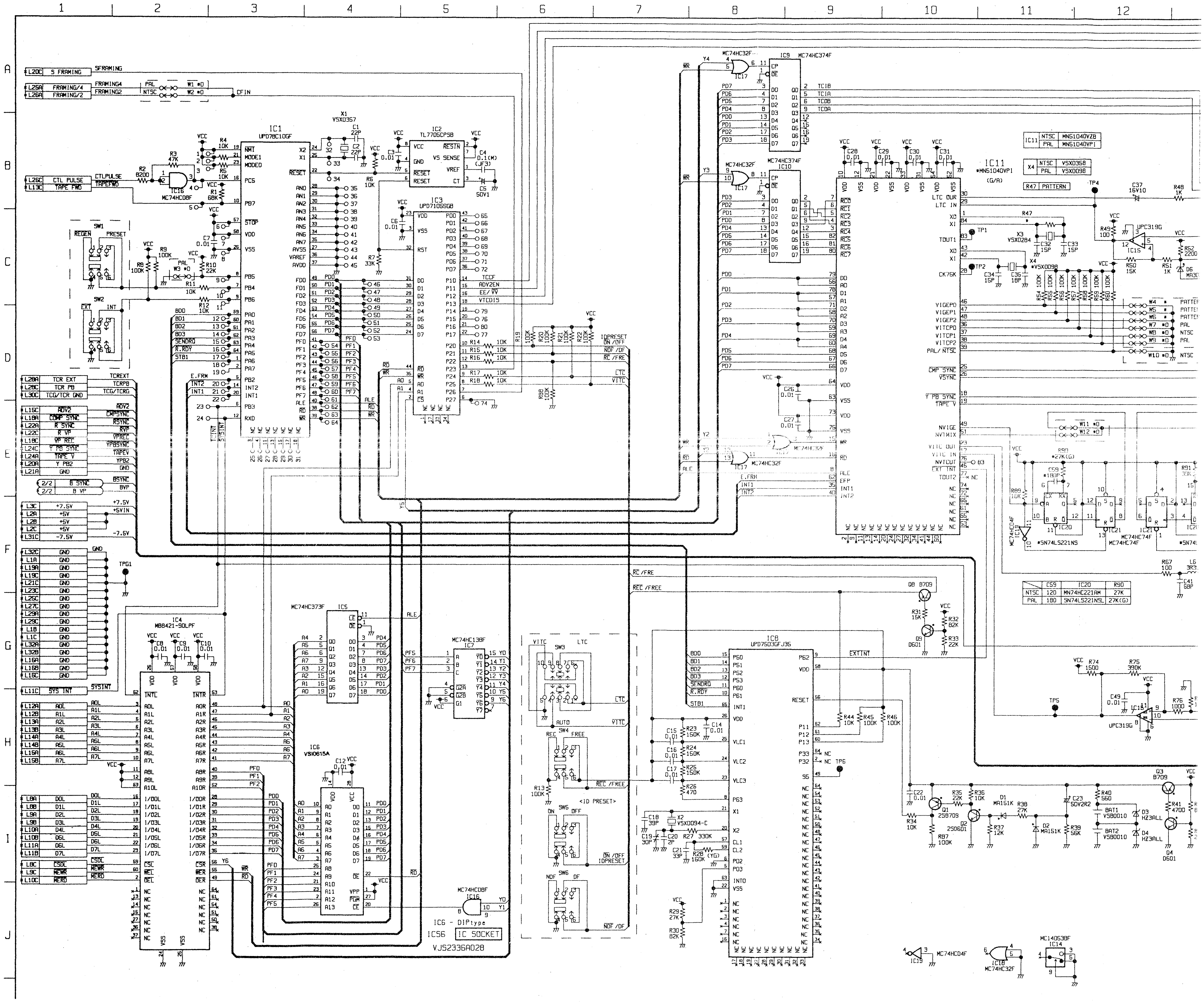
1
2
3
4
5
6
7
8
9
10
11
12
A
B
C
D
E
F
G
H
I
J
IC1 UPD78C10GF
IC2 TL7705CPSB
IC3 UPD7105GB
IC4 MB8421-90LPF
IC5 MC74HC373F
IC6 VSI0615A
IC7 MC74HC138F
IC8 UPD7503GFJ35
IC9 MC74HC374F
IC10 MC74HC374F
IC11 MN51040VP1
IC14 MC14053BF
IC15 UPC319G
IC16 MC74HC08F
IC17 MC74HC32F
IC18 MC74HC32F
IC19 MC74HC04F
IC20 SN74LS221NS
IC21 MC74HC74F
X1 VSX0357
X2 VSX0094-C
X3 VSX0284
X4 VSX0098
SW1 REGEN PRESET
SW2 EXT INT
SW3 VITC LTC
SW4 REC FREE
SW5 ON OFF
SW6 NDF DF
AUTO
<ID PRESET>
IC6 - DIPtype
ICS6 IC SOCKET
VJS2336A028
TP1
TP2
TP4
TP5
TP6
TPG1
Q1 2SB709
Q2 2SD601
Q3 B709
Q4 D601
Q8 B709
Q9 D601
D1 MA151K
D2 MA151K
D3 HZ3ALL
D4 HZ3ALL
BAT1 VSB0010
BAT2 VSB0010
S FRAMING
FRAMING/4
FRAMING/2
CTL PULSE
TAPE FWD
TCR EXT
TCR PB
TCG/TCR GND
ADV2
COMP SYNC
R SYNC
R VP
VP REC
Y PB SYNC
TAPE V
Y PB2
B SYNC
B VP
+7.5V
+5V
-7.5V
GND
SYS INT
REC/FREE
ON/OFF
ID PRESET
NDF/DF
LTC
VITC
EXTINT
PAL
NTSC
IC11 NTSC MN51040VZB
IC11 PAL MN51040VP1
X4 NTSC VSX0358
X4 PAL VSX0098
R47 PATTERN
C59 IC20 R90
NTSC 120 MN74HC221RM 27K
PAL 180 SN74LS221NSL 27K(G)

ATIC DIAGRAM 1/2

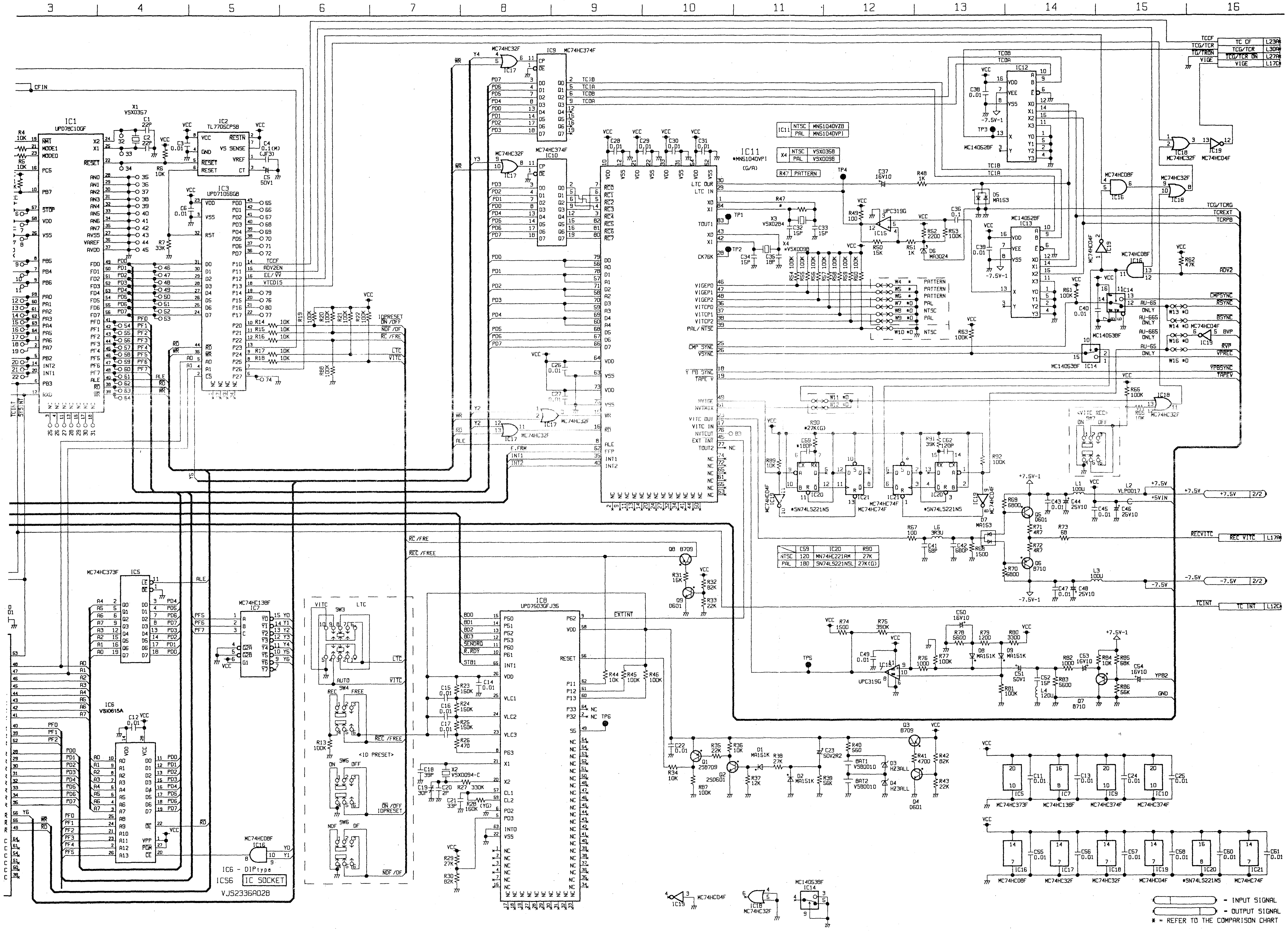
3
4
5
6
7
8
9
10
11
12
13
14
15
16
IC1 UPD78C10GF
X1 VSX0357
IC2 TL7705CPSB
IC3 UPD71055GB
IC9 MC74HC374F
IC10 MC74HC374F
IC11 *MN5104DVP1 (G/A)
IC11 NTSC MN5104DVZB
IC11 PAL MN5104DVP1
X4 NTSC VSX0358
X4 PAL VSX0098
R47 PATTERN
IC12 MC14052BF
IC13 MC14052BF
IC14 MC14053BF
IC16 MC74HC08F
IC18 MC74HC32F
IC19 MC74HC04F
IC20 *SN74LS221NS
IC21 MC74HC74F
IC15 UPC319G
IC5 MC74HC373F
IC6 VSI0615A
IC7 MC74HC138F
IC8 UPD7503GFJ35
IC6 - DIP type
IC56 IC SOCKET
VJS2336A028
C59 IC20 R90
NTSC 120 MN74HC221AM 27K
PAL 180 SN74LS221NSL 27K(G)
TCCF
TCG/TCR
TCG/TRON
VIGE
TC CF L23A
TCG/TCR L30A
TCG/TCR ON L27A
VIGE L17C
TCG/TCRG
TCREXT
TCRPB
ADV2
CMPSYNC
RSYNC
BSYNC
BVP
VPREC
VPBSYNC
TAPEV
+7.5V 2/2
REC VITC L17A
-7.5V 2/2
TC INT L12C
RC/FRE
REC/FREE
ID PRESET
ON/OFF
NDF/OF
AUTO
VITC
LTC
= INPUT SIGNAL
= OUTPUT SIGNAL
* = REFER TO THE COMPARISON CHART

AU-F65 SCHEMATIC DIAGRAM 2/2

1 2 3 4 5 6 7

A

B

C

D

B2L
VJP2868

B2	TCG/TCR (OPTION)											
L (LEFT)	A				B				C			
1	GND				←				←			
2	+5V				←				←			
3	REF VIDEO IN	CN54-10			DUB CF IN	CN54-11			+7.5V			
4	GND	CN54-9,12			GND	CN54-9,12			+14.5V			
5	BS	CN54-13			DUB CF	CN60-13			REF VIDEO	CN60-14		
6	GND				GND				GND	CN60-15		
7	REF SCH	B1-R21B	CN50-10A		REF DET	B1-R21A	CN50-11B		INT	B1-R25A	CN50-5B	
8	D0L	B1-L5A			D1L	B1-L5B			CS DL	B1-L5C		
9	D2L	B1-L6A			D3L	B1-L6B			ME WR	B1-L6C		
10	D4L	B1-L7A			D5L	B1-L7B			ME RD	B1-L7C		
11	D6L	B1-L8A			D7L	B1-L8B			SYS INT	B1-L8C		
12	A0L	B1-L9A			A1L	B1-L9B			TC INT	B1-L9C		
13	A2L	B1-L10S			A3L	B1-L10B			TAPE FWD	B1-L10C		
14	A4L	B1-L11A			A5L	B1-L11B			+11.5V	B1-L11C		
15	A6L	B1-L12A			A7L	B1-L12B			ADV 2	B1-L15A	CN50-4B	
16	GND				GND				GND			
17	REC VITC	CN62-1						*	VIGE	CN62-5		
18	COMP SYNC	CN62-3						*	VP REC	CN62-7		
19	GND	CN62-2,4						*	GND	CN62-6,8		
20	Y PB 2	CN62-9						*	5 FRAMING	B1-R6A	CN50-30A	
21	GND	CN62-10						*	GND			
22	R SYNC	CN60-1						*	RVP	CN60-3	CN50-30A	
23	TC CF	CN60-9						*	GND			
24	TAPE V	CN60-7						*	Y PB SYNC	CN60-5		
25	FRAMING/4	B1-R6C	CN50-29A					*	GND			
26	FRAMING/2	B1-R6B	CN50-30B					*	CTL PULSE	B1-R3C	CN50-31A	CN53-1B
27	TCG/TCR ON	CN50-32A						*	GND			
28	TCR EXT	CN61-1						*	TCR PB	CN61-3		
29	GND							*	GND			
30	TCG/TCR	CN61-4						*	TCG/TCR GND	CN61-2,5		
31				*				*	-7.5V			
32	GND				←				←			

5 SCHEMATIC DIAGRAM 2/2

2 3 4 5 6 7 8

A B C D

B2L
VJP2868

B2	TCG/TCR (OPTION)											
L (LEFT)	A				B				C			
1	GND				←				←			
2	+5V				←				←			
3	REF VIDEO IN	CN54-10			DUB CF IN	CN54-11			+7.5V			
4	GND	CN54-9,12			GND	CN54-9,12			+14.5V			
5	BS	CN54-13			DUB CF	CN60-13			REF VIDEO	CN60-14		
6	GND				GND				GND	CN60-15		
7	$\overline{\text{REF SCH}}$	B1-R21B	CN50-10A		$\overline{\text{REF DET}}$	B1-R21A	CN50-11B		$\overline{\text{INT}}$	B1-R25A	CN50-5B	
8	D0L	B1-L5A			D1L	B1-L5B			$\overline{\text{CS DL}}$	B1-L5C		
9	D2L	B1-L6A			D3L	B1-L6B			$\overline{\text{ME WR}}$	B1-L6C		
10	D4L	B1-L7A			D5L	B1-L7B			$\overline{\text{ME RD}}$	B1-L7C		
11	D6L	B1-L8A			D7L	B1-L8B			$\overline{\text{SYS INT}}$	B1-L8C		
12	A0L	B1-L9A			A1L	B1-L9B			$\overline{\text{TC INT}}$	B1-L9C		
13	A2L	B1-L10S			A3L	B1-L10B			$\overline{\text{TAPE FWD}}$	B1-L10C		
14	A4L	B1-L11A			A5L	B1-L11B			+11.5V	B1-L11C		
15	A6L	B1-L12A			A7L	B1-L12B			$\overline{\text{ADV 2}}$	B1-L15A	CN50-4B	
16	GND				GND				GND			
17	$\overline{\text{REC VITC}}$	CN62-1						*	VIGE	CN62-5		
18	$\overline{\text{COMP SYNC}}$	CN62-3						*	$\overline{\text{VP REC}}$	CN62-7		
19	GND	CN62-2,4						*	GND	CN62-6,8		
20	Y PB 2	CN62-9						*	5 FRAMING	B1-R6A	CN50-30A	
21	GND	CN62-10						*	GND			
22	$\overline{\text{R SYNC}}$	CN60-1						*	$\overline{\text{RVP}}$	CN60-3	CN50-30A	
23	TC CF	CN60-9						*	GND			
24	$\overline{\text{TAPE V}}$	CN60-7						*	$\overline{\text{Y PB SYNC}}$	CN60-5		
25	FRAMING/4	B1-R6C	CN50-29A					*	GND			
26	FRAMING/2	B1-R6B	CN50-30B					*	CTL PULSE	B1-R3C	CN50-31A	CN53-1B
27	$\overline{\text{TCG/TCR ON}}$	CN50-32A						*	GND			
28	TCR EXT	CN61-1						*	TCR PB	CN61-3		
29	GND							*	GND			
30	TCG/TCR	CN61-4						*	TCG/TCR GND	CN61-2,5		
31				*				*	-7.5V			
32	GND				←				←			

AU-F65 P.C.BOARD (VEP86089A)

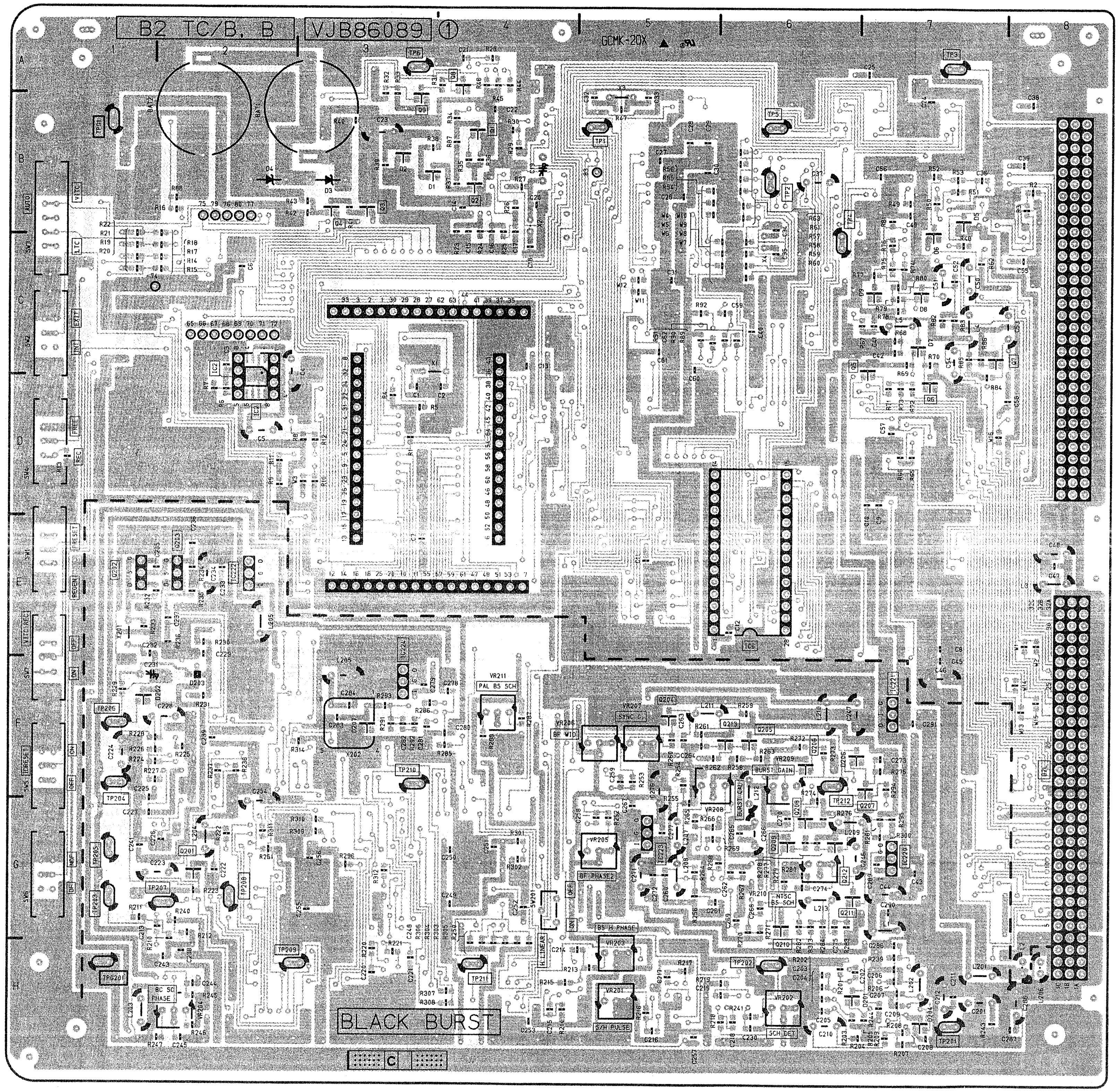
B2 TC/B. B
VJB86089 ①
GCMK-20X
BLACK BURST
C

(FOIL SIDE)

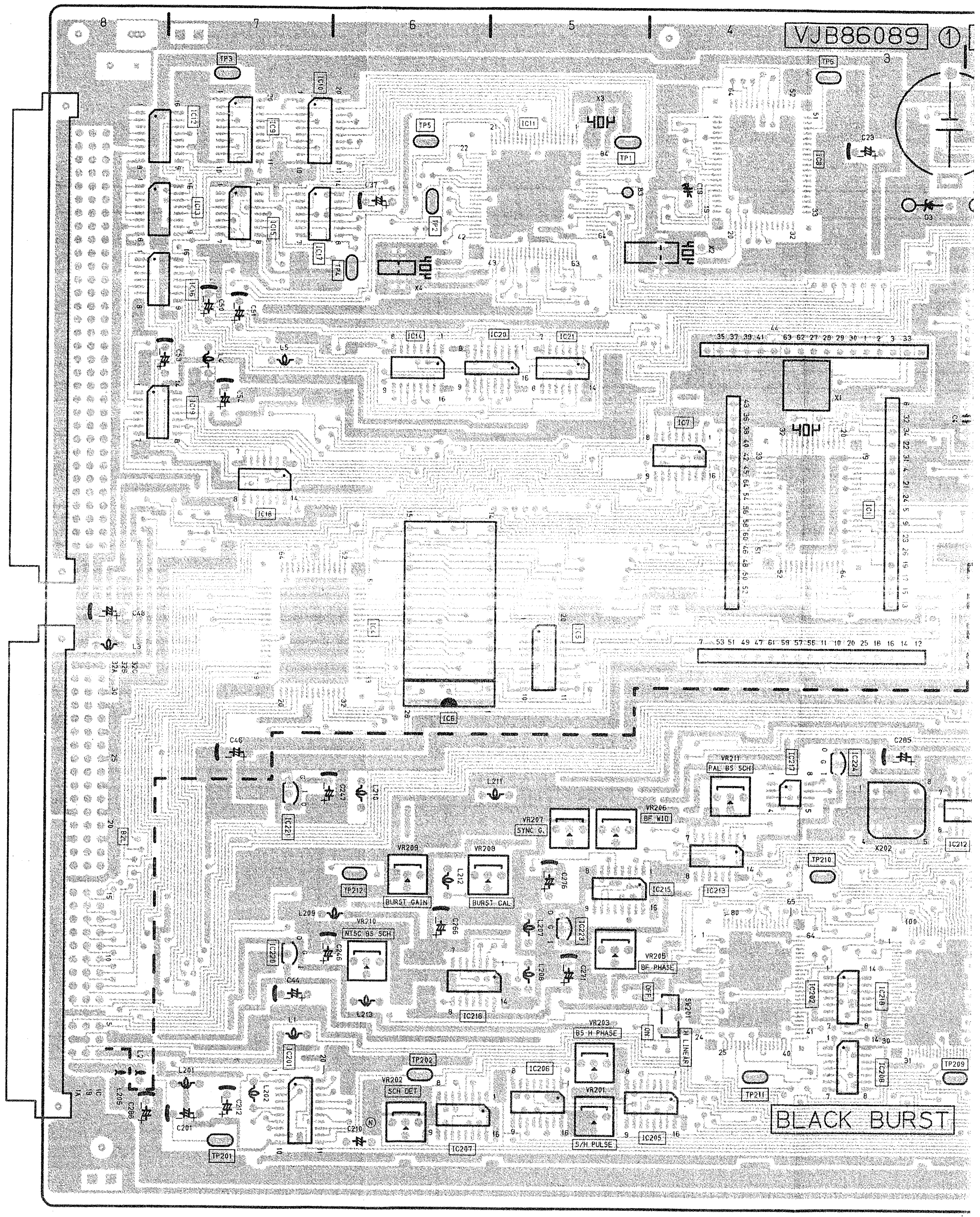
VJB86089 ①
BLACK BURST

(CO

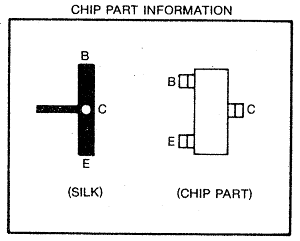
CHIP PART INFORMATION
B
C
E
(SILK)
(CHIP PART)

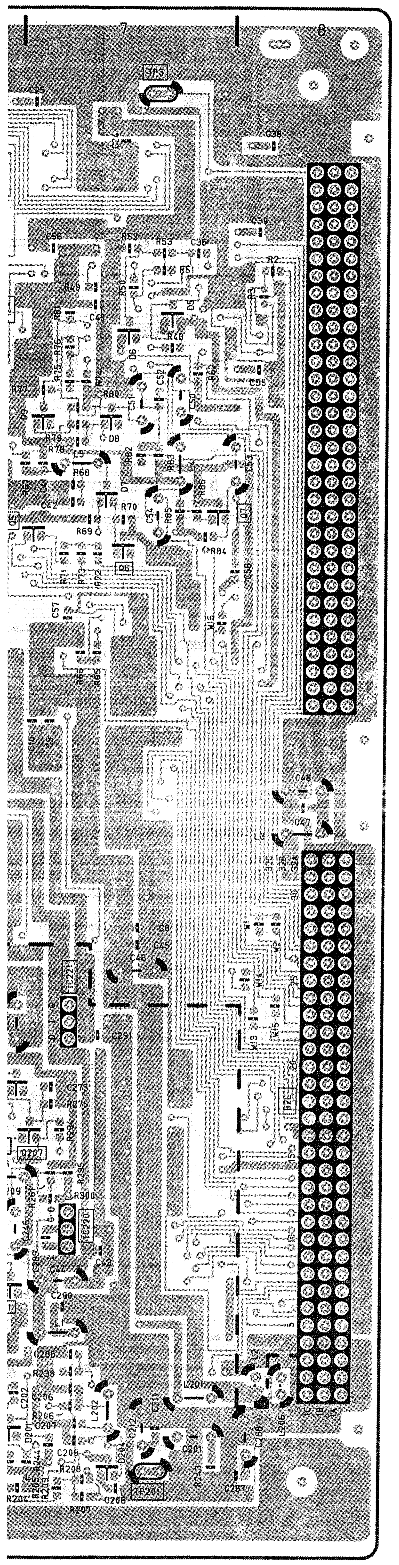

(FOIL SIDE)

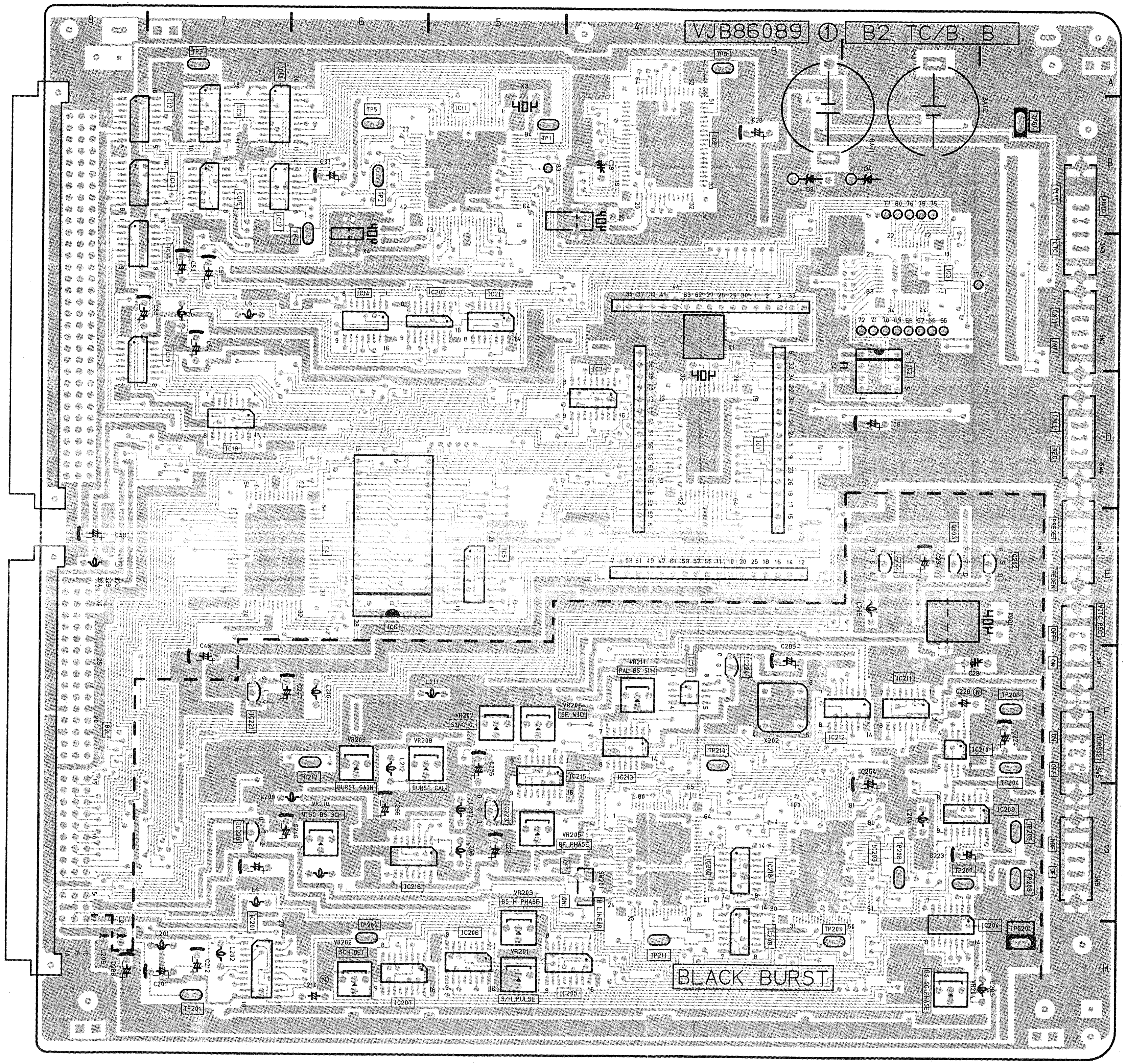
VJB86089 ① B2 TC/B. B
BLACK BURST
BURST GAIN
BURST CAL
NTSC BS SCH
PAL BS SCH
BF WID
SYNC G
BF PHASE
BS H PHASE
SCH DET
S/H PULSE
BS SC PHASE

(COMPONENT SIDE)

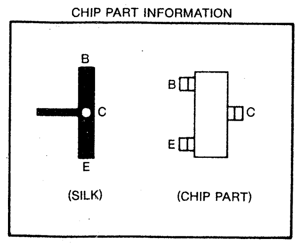
CHIP PART INFORMATION
B
C
E
(SILK)
B
C
E
(CHIP PART)

AU-F65 (TIME CODE)

COMPONENT SIDE				FOIL SIDE	
Transistors		TP5	B-6	Transistors	
Q202	E-1	TP6	A-3	Q1	B-4
Q203	E-2	TP201	H-7	Q2	B-4
Integrated Circuits		TP202	H-6	Q3	B-3
IC1	D-3	TP203	G-1	Q4	B-3
IC2	D-2	TP204	F-1	Q5	C-6
IC3	C-2	TP205	G-1	Q6	D-7
IC4	E-6	TP206	F-1	Q7	C-7
IC5	E-5	TP207	G-2	Q8	A-4
IC6	E-6	TP208	G-2	Q9	B-3
IC7	D-4	TP209	H-3	Q201	G-2
IC8	B-3	TP210	F-3	Q204	F-5
IC9	B-7	TP211	H-4	Q205	F-6
IC10	B-7	TP212	F-6	Q206	F-6
IC11	B-5	TP GND		Q207	F-7
IC12	B-8	TPG1	B-1	Q208	G-6
IC13	B-8	TPG201	H-1	Q209	G-6
IC14	C-6	Others		Q210	G-6
IC15	B-7	VR201	H-5	Q211	G-6
IC16	C-8	VR202	H-6	Q212	G-6
IC17	B-7	VR203	H-5	Q213	F-6
IC18	D-7	VR204	H-2		
IC19	C-8	VR205	G-5		
IC20	C-5	VR206	F-5		
IC21	C-5	VR207	F-5		
IC201	H-7	VR208	F-5		
IC202	G-3	VR209	F-6		
IC203	G-2	VR210	G-6		
IC204	H-2	VR211	F-4		
IC205	H-4				
IC206	H-5				
IC207	H-6				
IC208	H-3				
IC209	G-2				
IC210	F-2				
IC211	F-2				
IC212	F-2				
IC213	F-4				
IC215	F-5				
IC216	G-6				
IC217	F-4				
IC218	G-3				
IC220	G-7				
IC221	F-7				
IC222	E-2				
IC223	G-5				
IC224	F-3				
Test Points					
TP1	B-5				
TP2	B-6				
TP3	A-7				
TP4	C-6				

ELECTRICAL REPLACEMENT PARTS LIST

Ref.No.	Part No.	Part Name & Description	Pcs	Remarks
BAT1,T2	VSB0010	BATTERY	2	
B2L	VJP2899B096	CONNECTOR(MALE)	1	
		CAPACITORS		
C1,C2	ECUM1H220JCN	C.CAPACITOR CH 50V 22P	2	
C3	ECUM1H103ZFN	C.CAPACITOR CH 50V 0.01U	1	
C4	ECQM1H104JF	P.CAPACITOR 50V 0.1U	1	
C5	ECEA1HU010	E.CAPACITOR 50V 1U	1	
C6-C9	ECUM1H103ZFN	C.CAPACITOR CH 50V 0.01U	4	
C10-17	ECUM1H103ZFN	C.CAPACITOR CH 50V 0.01U	8	
C18	ECUM1H390JCN	C.CAPACITOR CH 50V 39P	1	
C19	ECV1ZW30X53	V.CAPACITOR 30P	1	
C20	ECUM1H020CCN	C.CAPACITOR CH 50V 2P	1	
C21	ECUM1H330JCN	C.CAPACITOR CH 50V 33P	1	
C22	ECUM1H103ZFN	C.CAPACITOR CH 50V 0.01U	1	
C23	ECEA1HU2R2	E.CAPACITOR 50V 2.2U	1	
C24-31	ECUM1H103ZFN	C.CAPACITOR CH 50V 0.01U	8	
C32-34	ECUM1H150JCN	C.CAPACITOR CH 50V 15P	3	
C35	ECUM1H180JCN	C.CAPACITOR CH 50V 18P	1	
C36	ECUM1E104ZFN	C.CAPACITOR CH 25V 0.1U	1	
C37	ECEA1CU100	E.CAPACITOR 16V 10U	1	
C38-40	ECUM1H103ZFN	C.CAPACITOR CH 50V 0.01U	3	
C41	ECUM1H680JCN	C.CAPACITOR CH 50V 68P	1	
C42	ECUM1H681JCN	C.CAPACITOR CH 50V 680P	1	
C43	ECUM1H103ZFN	C.CAPACITOR CH 50V 0.01U	1	
C44	ECEA1EU100	E.CAPACITOR 25V 10U	1	
C45	ECUM1H103ZFN	C.CAPACITOR CH 50V 0.01U	1	
C46	ECEA1EU100	E.CAPACITOR 25V 10U	1	
C47	ECUM1H103ZFN	C.CAPACITOR CH 50V 0.01U	1	
C48	ECEA1EU100	E.CAPACITOR 25V 10U	1	
C49	ECUM1H103ZFN	C.CAPACITOR CH 50V 0.01U	1	
C50	ECEA1CU100	E.CAPACITOR 16V 10U	1	
C51	ECEA1HU010	E.CAPACITOR 50V 1U	1	
C52	ECUM1H150JCN	C.CAPACITOR CH 50V 15P	1	
C53,54	ECEA1CU100	E.CAPACITOR 16V 10U	2	
C55-58	ECUM1H103ZFN	C.CAPACITOR CH 50V 0.01U	4	
C59	ECUM1H121JCN	C.CAPACITOR CH 50V 120P	1	AU-F65-P
C59	ECUM1H181JCN	C.CAPACITOR CH 50V 180P	1	AU-F65-E
C60,61	ECUM1H103ZFN	C.CAPACITOR CH 50V 0.01U	2	
C62	ECUM1H121JCN	C.CAPACITOR CH 50V 120P	1	
D1,D2	MA151K	DIODE	2	
D3,D4	HZ3ALL	DIODE	2	
D5	MA153	DIODE	1	
D6	MA3024	DIODE	1	
D7	MA153	DIODE	1	
D8,D9	MA151K	DIODE	2	
IC1	UPD78C10CW	IC	1	
IC2	TL7705CPSB	IC	1	
IC3	UPD71055GB	IC	1	
IC4	MB8421-90LPF	IC	1	
IC5	MC74HC373F	IC	1	
IC6	VSI0615A	IC	1	AU-F65-P
IC6	VSI0751	IC	1	AU-F65-E
IC7	MC74HC138AF	IC	1	
IC8	UPD7503GFJ35	IC	1	
IC9	MC74HC374F	IC	1	
IC10	MC74HC374F	IC	1	
IC11	MN51040VZB	IC	1	AU-F65-P
IC11	MN51040VPI	IC	1	AU-F65-E
IC12,13	MC14052BF	IC	2	
IC14	MC14053BF	IC	1	(R)
IC15	UPC319G2	IC	1	
IC16	MC74HC08AF	IC	1	
IC17,18	MC74HC32AF	IC	2	
IC19	MC74HC04AF	IC	1	
IC20	MM74HC221AM	IC	1	AU-F65-P
IC20	SN74LS221NS	IC	1	AU-F65-E
IC21	MC74HC74AF	IC	1	
IC6S	VJS2336A028	CONNECTOR (FEMALE)	1	
L1	VLQEL05S101J	COIL 100UH	1	
L2	VLP0017	COIL	1	
L3	VLQEL05S101J	COIL 100UH	1	
L4	VLQEL05S121J	COIL 120UH	1	
L5	VLQEL05S3R3J	COIL 3.3UH	1	
Q1	2SB709	TRANSISTOR CHIP	1	(Q,R)
Q2	2SD601	TRANSISTOR CHIP	1	(Q,R)
Q3	2SB709	TRANSISTOR CHIP	1	(Q,R)
Q4,Q5	2SD601	TRANSISTOR CHIP	2	(Q,R)
Q6,Q7	2SB710	TRANSISTOR	2	(Q,R)
Q8	2SB709	TRANSISTOR CHIP	1	(Q,R)
Q9	2SD601	TRANSISTOR CHIP	1	(Q,R)
		RESISTORS		
R1	ERJ6GEYJ683	M.RESISTOR CH 1/10W 68K	1	
R2	ERJ6GEYJ822	M.RESISTOR CH 1/10W 8.2K	1	
R3	ERJ6GEYJ473	M.RESISTOR CH 1/10W 47K	1	
R4-R6	ERJ6GEYJ103	M.RESISTOR CH 1/10W 10K	3	
R7	ERJ6GEYJ333	M.RESISTOR CH 1/10W 33K	1	
R8,R9	ERJ6GEYJ104	M.RESISTOR CH 1/10W 100K	2	
R10	ERJ6GEYJ223	M.RESISTOR CH 1/10W 22K	1	
R11,12	ERJ6GEYJ103	M.RESISTOR CH 1/10W 10K	2	
R13	ERJ6GEYJ104	M.RESISTOR CH 1/10W 100K	1	
R14-18	ERJ6GEYJ103	M.RESISTOR CH 1/10W 10K	5	
R19-22	ERJ6GEYJ104	M.RESISTOR CH 1/10W 100K	4	
R23-25	ERJ6GEYJ154	M.RESISTOR CH 1/10W 150K	3	
R26	ERJ6GEYJ471	M.RESISTOR CH 1/10W 470	1	
R27	ERJ6GEYJ334	M.RESISTOR CH 1/10W 330K	1	
R28	ERJ6GEYG164	M.RESISTOR CH 1/10W 160K	1	
R29	ERJ6GEYJ273	M.RESISTOR CH 1/10W 27K	1	
R30	ERJ6GEYJ823	M.RESISTOR CH 1/10W 82K	1	
R31	ERJ6GEYJ153	M.RESISTOR CH 1/10W 15K	1	
R32	ERJ6GEYJ823	M.RESISTOR CH 1/10W 82K	1	
R33	ERJ6GEYJ223	M.RESISTOR CH 1/10W 22K	1	
R34	ERJ6GEYJ103	M.RESISTOR CH 1/10W 10K	1	
R35	ERJ6GEYJ223	M.RESISTOR CH 1/10W 22K	1	
R36	ERJ6GEYJ103	M.RESISTOR CH 1/10W 10K	1	
R37	ERJ6GEYJ123	M.RESISTOR CH 1/10W 12K	1	
R38	ERJ6GEYJ273	M.RESISTOR CH 1/10W 27K	1	
R39	ERJ6GEYJ563	M.RESISTOR CH 1/10W 56K	1	
R40	ERJ6GEYJ561	M.RESISTOR CH 1/10W 560	1	
R41	ERJ6GEYJ472	M.RESISTOR CH 1/10W 4.7K	1	
R42	ERJ6GEYJ823	M.RESISTOR CH 1/10W 82K	1	
R43	ERJ6GEYJ223	M.RESISTOR CH 1/10W 22K	1	
R44	ERJ6GEYJ103	M.RESISTOR CH 1/10W 10K	1	
R45,46	ERJ6GEYJ104	M.RESISTOR CH 1/10W 100K	2	
R48	ERJ6GEYJ102	M.RESISTOR CH 1/10W 1K	1	
R49	ERJ6GEYJ101	M.RESISTOR CH 1/10W 100	1	
R50	ERJ6GEYJ153	M.RESISTOR CH 1/10W 15K	1	
R51	ERJ6GEYJ102	M.RESISTOR CH 1/10W 1K	1	
R52	ERJ6GEYJ222	M.RESISTOR CH 1/10W 2.2K	1	
R53-61	ERJ6GEYJ104	M.RESISTOR CH 1/10W 100K	9	
R62	ERJ6GEYJ473	M.RESISTOR CH 1/10W 47K	1	
R63	ERJ6GEYJ104	M.RESISTOR CH 1/10W 100K	1	
R65	ERJ6GEYJ103	M.RESISTOR CH 1/10W 10K	1	
R66	ERJ6GEYJ104	M.RESISTOR CH 1/10W 100K	1	
R67	ERJ6GEYJ101	M.RESISTOR CH 1/10W 100	1	
R68	ERJ6GEYJ152	M.RESISTOR CH 1/10W 1.5K	1	
R69,70	ERJ6GEYJ682	M.RESISTOR CH 1/10W 6.8K	2	
R71,72	ERJ6GEYJ4R7	M.RESISTOR CH 1/10W 4.7	2	
R73	ERJ6GEYJ680	M.RESISTOR CH 1/10W 68	1	
R74	ERJ6GEYJ152	M.RESISTOR CH 1/10W 1.5K	1	
R75	ERJ6GEYJ394	M.RESISTOR CH 1/10W 390K	1	
R76	ERJ6GEYJ102	M.RESISTOR CH 1/10W 1K	1	
R77	ERJ6GEYJ104	M.RESISTOR CH 1/10W 100K	1	
R78	ERJ6GEYJ562	M.RESISTOR CH 1/10W 5.6K	1	
R79	ERJ6GEYJ122	M.RESISTOR CH 1/10W 1.2K	1	
R80	ERJ6GEYJ332	M.RESISTOR CH 1/10W 3.3K	1	
R81	ERJ6GEYJ104	M.RESISTOR CH 1/10W 100K	1	
R82	ERJ6GEYJ102	M.RESISTOR CH 1/10W 1K	1	
R83	ERJ6GEYJ562	M.RESISTOR CH 1/10W 5.6K	1	
R84	ERJ6GEYJ103	M.RESISTOR CH 1/10W 10K	1	
R85	ERJ6GEYJ683	M.RESISTOR CH 1/10W 68K	1	
R86	ERJ6GEYJ563	M.RESISTOR CH 1/10W 56K	1	
R87,88	ERJ6GEYJ104	M.RESISTOR CH 1/10W 100K	2	
R89	ERJ6GEYJ103	M.RESISTOR CH 1/10W 10K	1	
R90	ERJ6GEYJ273	M.RESISTOR CH 1/10W 27K	1	AU-F65-P
R90	ERJ6GEYG273	M.RESISTOR CH 1/10W 27K	1	AU-F65-E
R91	ERJ6GEYJ393	M.RESISTOR CH 1/10W 39K	1	
R92	ERJ6GEYJ104	M.RESISTOR CH 1/10W 100K	1	
SW1	VSS0223	SWITCH	1	
SW4,W5	VSS0223	SWITCH	2	
SW7	VSS0223	SWITCH	1	
TP1-P6	VJR0646	TEST POINT	6	
TPG1	VJR0646	TEST POINT	1	
X1	VSX0357	CRYSTAL OSCILLATOR	1	
X2	VSX0094	CRYSTAL OSCILLATOR	1	
X3	VSX0284	CRYSTAL OSCILLATOR	1	
X4	VSX0358	CRYSTAL OSCILLATOR	1	AU-F65-P
X4	VSX0098	CRYSTAL OSCILLATOR	1	AU-F65-E
		MISCELLANEOUS		
	VML2143	CARD PULLER	1	
	VML2144	CARD PULLER	1	
	VMS4174	PIN	4	
	VMZ1548	BARRIER	1	
	VSC3057	SHIELD CASE	1	
	VXA3967	P.C.B. SHIELD PLATE	1	
	XNG26E	NUT	2	
	XNG3ES	NUT	2	
	XSN3+6S	SCREW	2	
	XYNV3+K6FR	SCREW	4	
	XYN26+C10	SCREW	2	

MECHANICAL REPLACEMENT PARTS LIST

PACKING

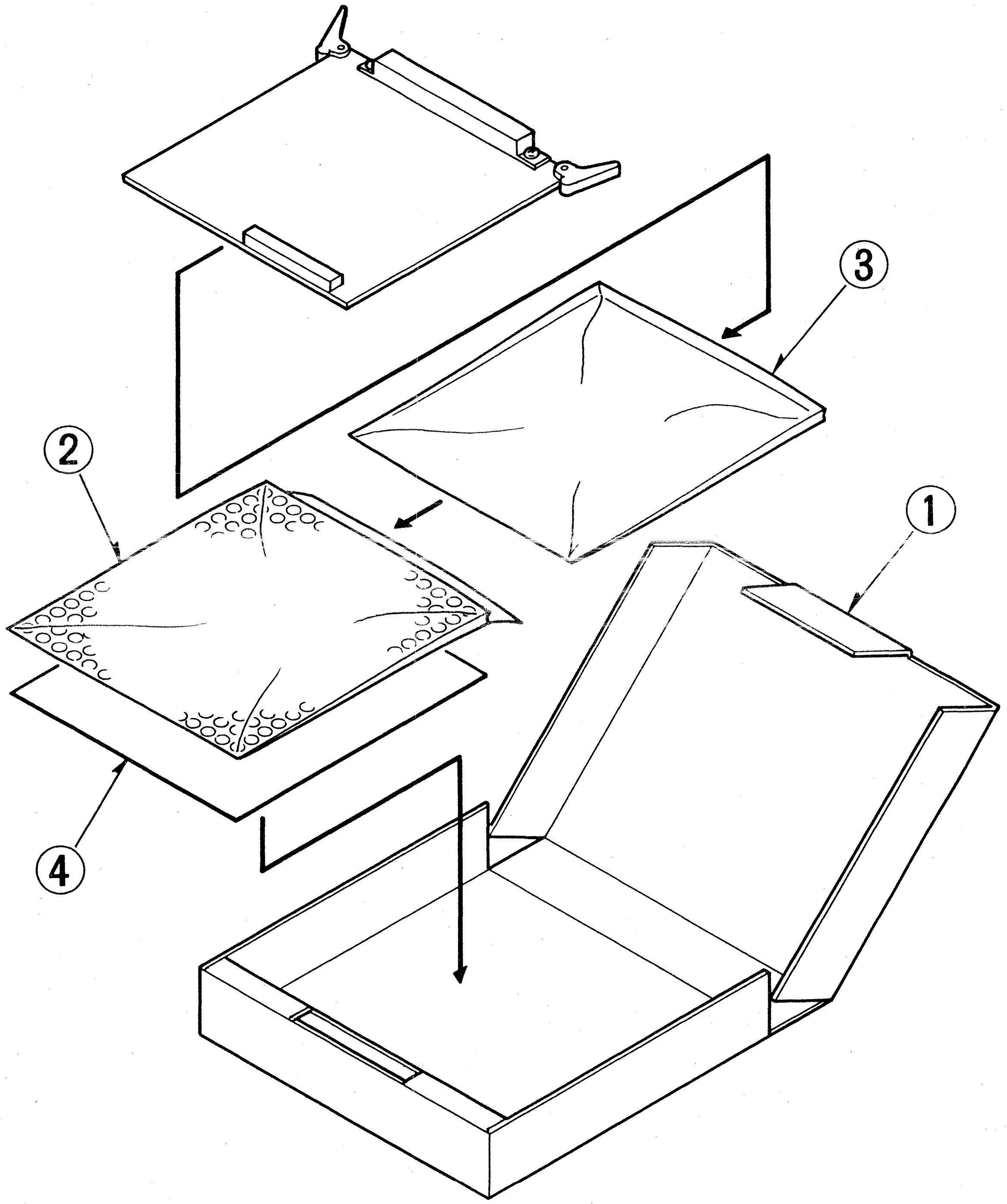

PACKING

Ref.No.		Part No.	Part Name & Description	Pcs	Remarks
1		VPG5338	PACKING CASE	1	
2		VQT3653	OPERATING INSTRUCTIONS	1	AU-F65-P
2		VQT3654	OPERATING INSTRUCTIONS	1	AU-F65-E
			(GERMAN, ENGLISH)		
3		VPF0385	ELECTRIFICATION PROTECTOR	1	
			BAG		
4		VPF0535	AIR CAP BAG	1	

50Pin Parallel Remote Connector

AU-MK25

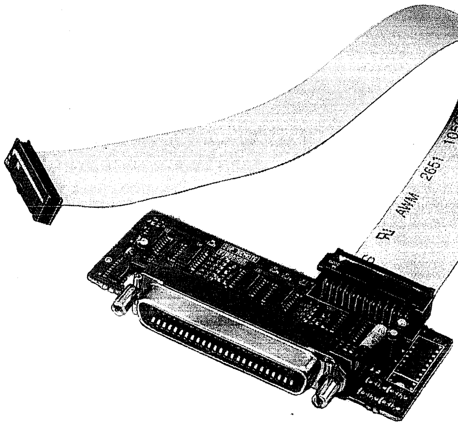

INTRODUCTION

AU-MK25 is a 50 Pin Parallel Remote Connector for use with the AU-65, AU-63 or the AU-62. When AU-MK25 is attached with the AU-65, AU-63 or the AU-62, it makes possible to control them by 50 pin cable.
This Section contains technical information covering the following points, schematic diagrams, P.C.Board diagrams, and parts list of AU-MK25.

How to attach the Parallel Remote Connector AU-MK25 to AU-65

Fig. 1

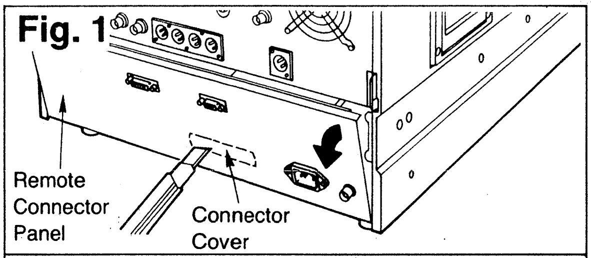
Remote Connector Panel
Connector Cover

Fig. 2

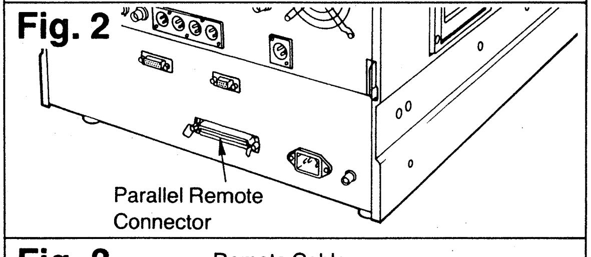
Parallel Remote Connector

Fig. 3

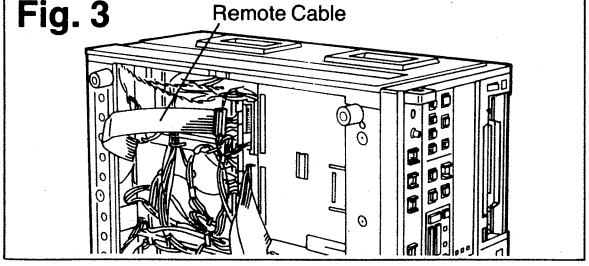
Remote Cable

1. Remove the remote connector panel and connector cover of the AU-65 (Fig. 1).
2. Attach the parallel remote connector using the screwdriver (Fig. 2).
3. Remove the bottom panel and connect the remote cable (supplied) as shown (Fig. 3).
4. Attach the bottom and the remote connector panels.

AU-MK25 SCHEMATIC DIAGRAM (OPTION FOR AU-65/63/62)

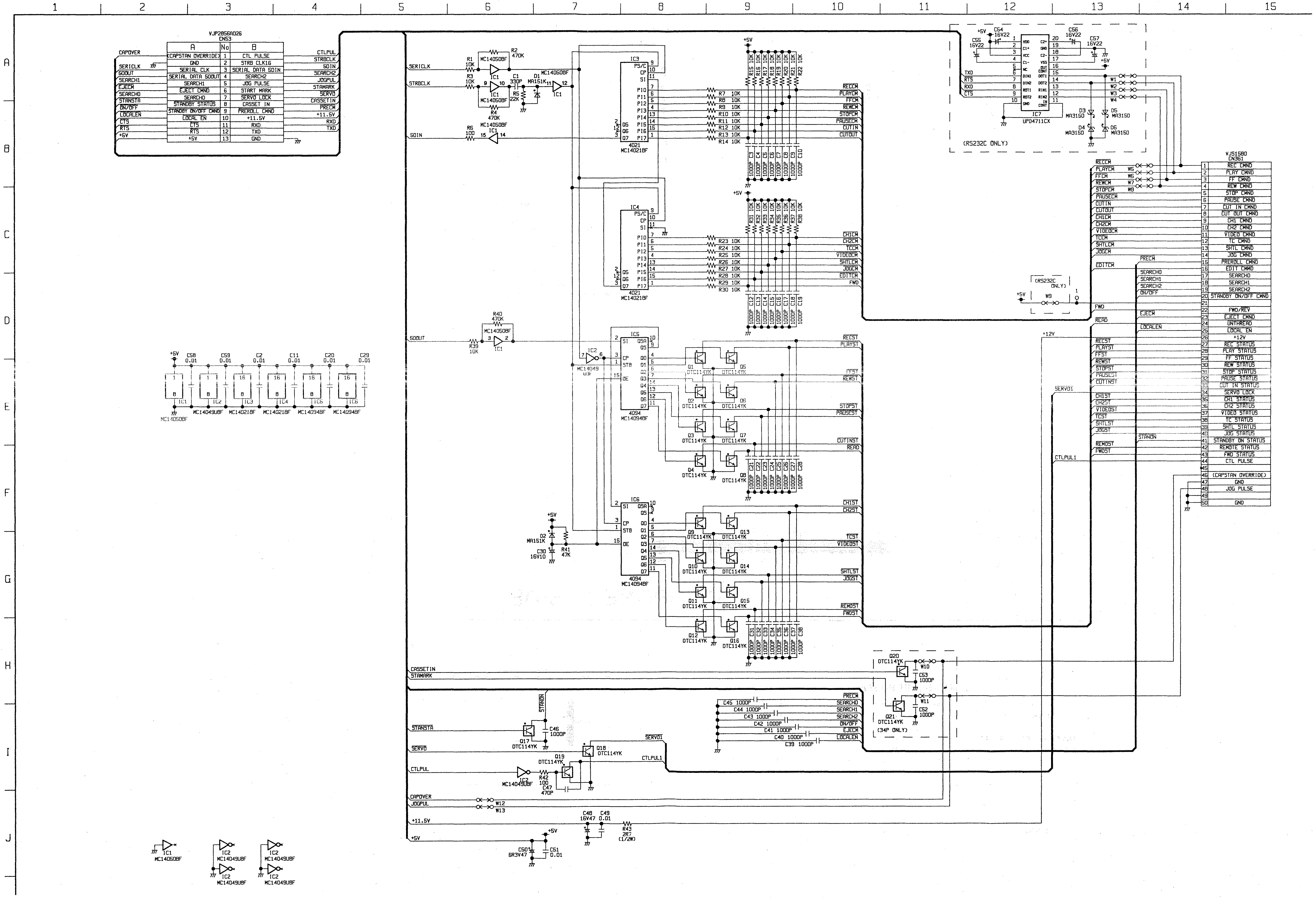

1
2
3
4
5
6
7
8
9
10
11
12
13
14
15
A
B
C
D
E
F
G
H
I
J
VJP2856A026
CN53
VJS1580
CN361
IC3 4021 MC14021BF
IC4 4021 MC14021BF
IC5 4094 MC14094BF
IC6 4094 MC14094BF
IC7 UPD4711CX
(RS232C ONLY)
(34P ONLY)
DTC114YK
MC14050BF
MC14049UBF
SERICLK
STRBCLK
SDIN
SDOUT
CASSETIN
STAMARK
STANSTA
SERVO
CTLPUL
CAPOVER
JOGPUL
+11.5V
+5V
+12V

AU-MK25 P.C.BOARD (VEP80574A)

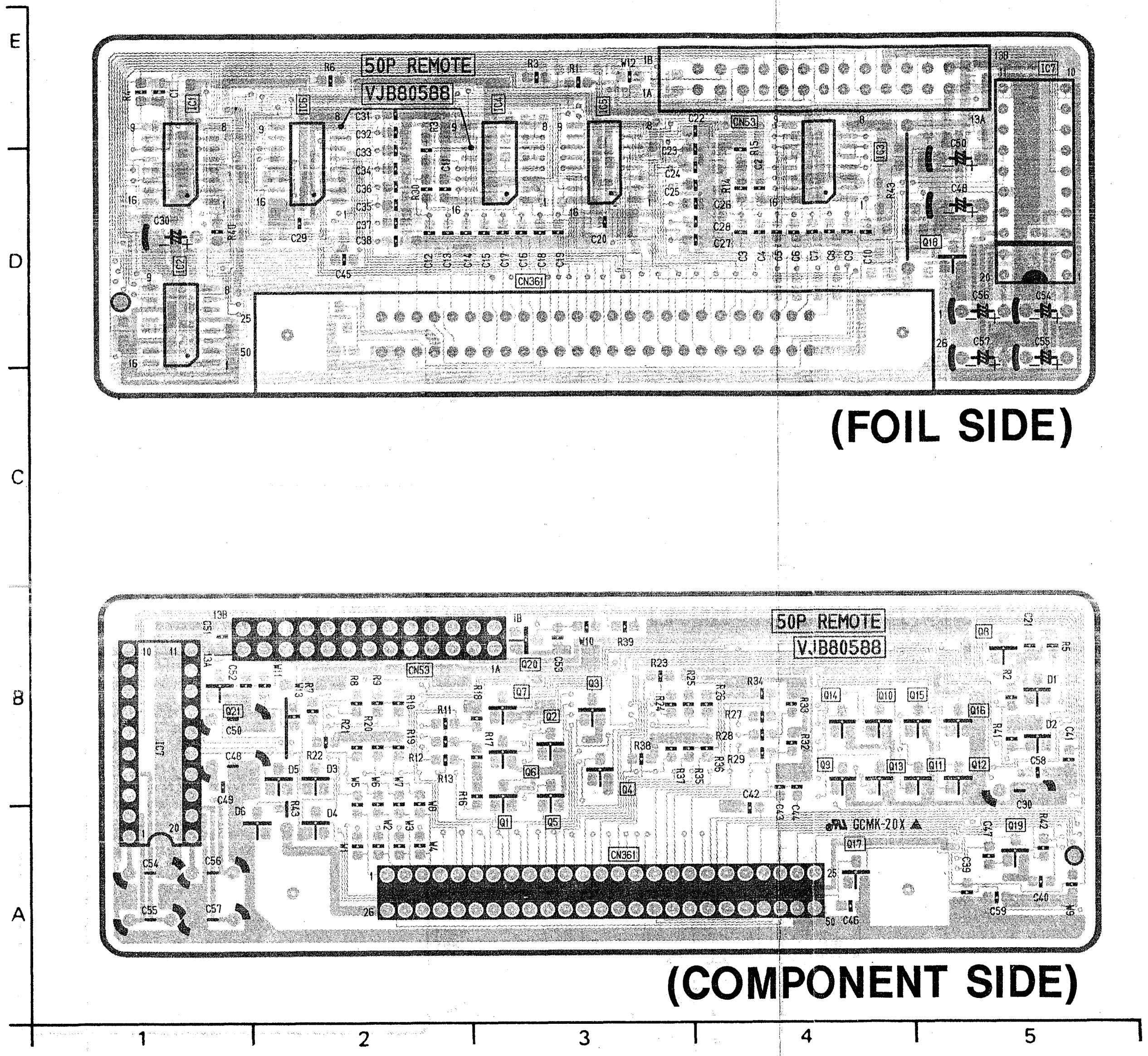
E
D
C
B
A
1
2
3
4
5
50P REMOTE
VJB80588
CN53
CN361
IC1
IC2
IC3
IC4
IC5
IC6
IC7
Q18
GCMK-20X
(FOIL SIDE)
(COMPONENT SIDE)

AU-MK25 (VEP80588A)					
FOIL SIDE		COMPONENT SIDE		Q14	B-4
TRANSISTOR		TRANSISTOR		Q15	B-5
Q18	D-5	Q1	B-3	Q16	B-5
INTEGRATED CIRCUIT		Q2	B-3	Q17	A-4
IC1	D-1	Q3	B-3	Q19	A-5
IC2	D-1	Q4	B-3	Q20	B-3
IC3	D-4	Q5	B-3	Q21	B-1
IC4	D-3	Q6	B-3		
IC5	D-3	Q7	B-3		
IC6	D-2	Q8	B-5		
IC7	D-5	Q9	B-4		
CONNECTOR		Q10	B-4		
CN53	E-4	Q11	B-5		
CN361	D-3	Q12	B-5		
		Q13	B-4		

ADDRESS INFORMATION

CHIP PART INFORMATION

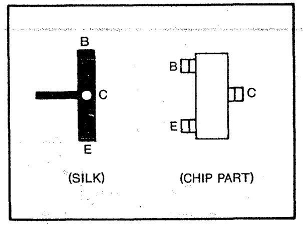
B
C
E
(SILK)
B
C
E
(CHIP PART)

ELECTRICAL REPLACEMENT PARTS LIST

Ref.No.		Part No.	Part Name & Description	Pcs	Remarks
			CAPACITORS		
C1		ECUM1H331JCN	C.CAPACITOR CH 50V 330P	1	
C2		ECUM1H103ZFN	C.CAPACITOR CH 50V 0.01U	1	
C3-C9		ECUM1H102KBN	C.CAPACITOR CH 50V 1000P	7	
C10		ECUM1H102KBN	C.CAPACITOR CH 50V 1000P	1	
C11		ECUM1H103ZFN	C.CAPACITOR CH 50V 0.01U	1	
C12-19		ECUM1H102KBN	C.CAPACITOR CH 50V 1000P	8	
C20		ECUM1H103ZFN	C.CAPACITOR CH 50V 0.01U	1	
C21-28		ECUM1H102KBN	C.CAPACITOR CH 50V 1000P	8	
C29		ECUM1H103ZFN	C.CAPACITOR CH 50V 0.01U	1	
C30		ECEA1CU100	E.CAPACITOR 16V 10U	1	
C31-46		ECUM1H102KBN	C.CAPACITOR CH 50V 1000P	16	
C47		ECUM1H471JCN	C.CAPACITOR CH 50V 470P	1	
C48		ECEA1CU470	E.CAPACITOR 16V 47U	1	
C49		ECUM1H103ZFN	C.CAPACITOR CH 50V 0.01U	1	
C50		ECEA0JU470	E.CAPACITOR 6.3V 47U	1	
C51		ECUM1H103ZFN	C.CAPACITOR CH 50V 0.01U	1	
C58,59		ECUM1H103ZFN	C.CAPACITOR CH 50V 0.01U	2	
CN53		VJP2856B026	CONNECTOR (MALE)	1	
CN361		VJS1580	CONNECTOR (FEMALE)	1	
D1,D2		MA151K	DIODE	2	
IC1		MC14050BF	IC	1	
IC2		MC14049UBF	IC	1	
IC3,C4		MC14021BF	IC	2	
IC5,C6		MC14094BF	IC	2	
Q1-Q9		DTC114YK	TRANSISTOR-RESISTOR	9	
Q10-19		DTC114YK	TRANSISTOR-RESISTOR	10	
			RESISTORS		
R1		ERJ6GEYJ103	M.RESISTOR CH 1/10W 10K	1	
R2		ERJ6GEYJ474	M.RESISTOR CH 1/10W 470K	1	
R3		ERJ6GEYJ103	M.RESISTOR CH 1/10W 10K	1	
R4		ERJ6GEYJ474	M.RESISTOR CH 1/10W 470K	1	
R5		ERJ6GEYJ223	M.RESISTOR CH 1/10W 22K	1	
R6		ERJ6GEYJ101	M.RESISTOR CH 1/10W 100	1	
R7-R9		ERJ6GEYJ103	M.RESISTOR CH 1/10W 10K	3	
R10-39		ERJ6GEYJ103	M.RESISTOR CH 1/10W 10K	30	
R40		ERJ6GEYJ474	M.RESISTOR CH 1/10W 470K	1	
R41		ERJ6GEYJ473	M.RESISTOR CH 1/10W 47K	1	
R42		ERJ6GEYJ101	M.RESISTOR CH 1/10W 100	1	
R43		ERQ12HJ2R7	F.RESISTOR 1/2W 2.7	1	
			MISCELLANEOUS		
		VMA6578	CONNECTOR5 ANGLE	2	
		XYN3+C10	SCREW	2	

MECHANICAL REPLACEMENT PARTS LIST

PACKING

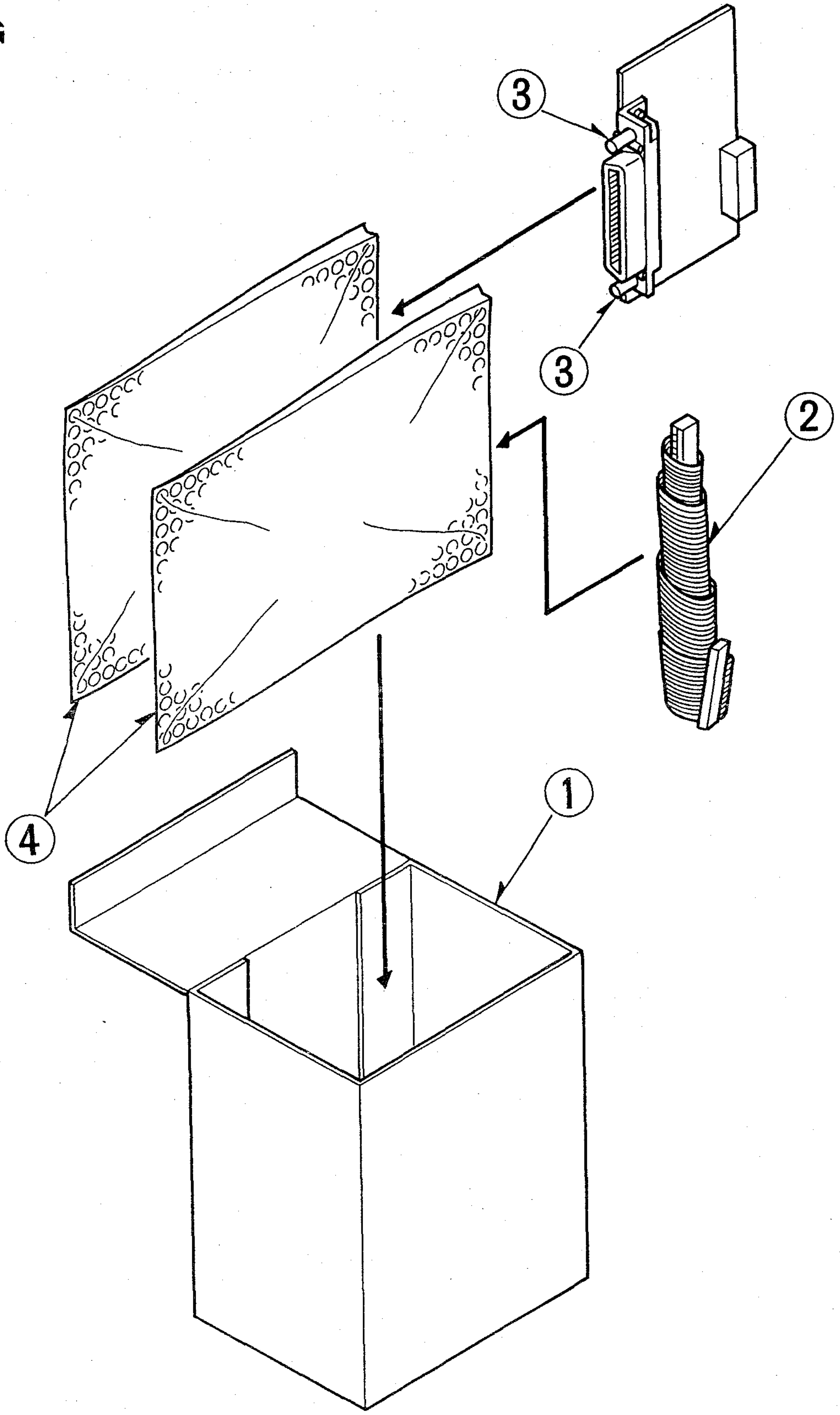

PACKING

Ref.No.		Part No.	Part Name & Description	Pcs	Remarks
1		VPG5340	PACKING CASE	1	
2		VEC0629	JACK CABLE	1	
3		VHD0178	50P CONNECTOR BOSS	2	
4		VPF0536	AIR CAP BAG	2	

Order No. VSD9503S599

Technical Bulletin

Supplement to the Service Manual

MII Video Product

Subject: Introduction of New DEC & CTCM (W4) P.C.Board

Please use this supplement together with the Service Manual(s) and model(s) (■) as follows:

	Model No.	Bulletin	Order No.	Effective from		Model No.	Bulletin	Order No.	Effective from
☐	AU-65E		VQS0264 ✓		☐	AU-665E		VQS0270	
☐	AU-63E		VQS0264 ✓		☐	AU-55HE		VSD9304M503 ✓	
☐	AU-62E		VQS0264 ✓		☐	AU-45HE		VSD9304M504	
■	AU-65HE	91	VSD9204M501 ✓	K4TNA - - -	■	AU-W35HE	24	VSD9406M506A/B ✓	J4TNA - - -
☐	AU-63HE		VSD9204M501 ✓		☐	AU-W33HE		VSD9406M506A/B ✓	
☐	AU-62HE		VSD9204M501 ✓		☐	AU-W32HE		VSD9406M506A/B ✓	
■	AU-66HE	67	VSD9208M502 ✓	K4TNA - - -	☐	COMMON		----------	

Board : DEC & CTCM (W4 : VEP83199B)

To improve manufacturing productivity, a new DEC & CTCM (W4) P.C.Board has been introduced.

The following items are included in this Service Manual Supplement.

1) Electrical Adjustment Procedures.
2) Block Diagrams.
3) Schematic Diagrams.
4) Circuit Board Diagrams.
5) Electrical Replacement Parts List.

Interchangeability Code (I/C)

A	Original or new parts may be used in early or late production set. Use original parts until exhausted, then stock new parts.	B	Original parts may be used in early production sets only. New parts may be used in early or late production sets. Use original parts possible then stock new parts.
C	New parts only may be used in early or late production sets.	D	Original parts may be used in early production sets only. New parts may be used in late production sets only. Stock both original and new parts.
E	Other		

Part Number

Ref. No.	Original Part No.	New Part No.	Part Name & Descriptions	Pcs	I/C	Remarks
	VEP83173A	VEP83199B	W4 DEC & CTCM	1	A	AU-66H / 65H
	VEP83173C	VEP83199B	W4 DEC & CTCM	1	A	AU-W35H

Panasonic

Printed in Japan

6. DEC & CTCM (W4) BOARD (1／2)

DEC & CTCM (1／2) SECTION FLOWCHART

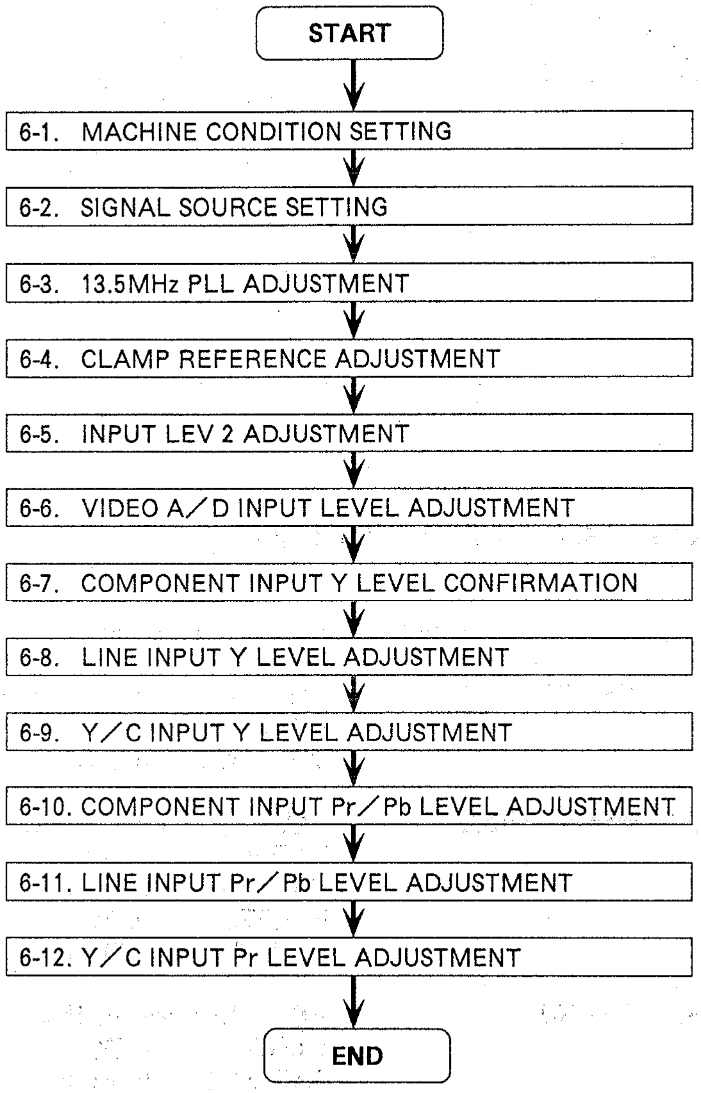
START
6-1. MACHINE CONDITION SETTING
6-2. SIGNAL SOURCE SETTING
6-3. 13.5MHz PLL ADJUSTMENT
6-4. CLAMP REFERENCE ADJUSTMENT
6-5. INPUT LEV 2 ADJUSTMENT
6-6. VIDEO A／D INPUT LEVEL ADJUSTMENT
6-7. COMPONENT INPUT Y LEVEL CONFIRMATION
6-8. LINE INPUT Y LEVEL ADJUSTMENT
6-9. Y／C INPUT Y LEVEL ADJUSTMENT
6-10. COMPONENT INPUT Pr／Pb LEVEL ADJUSTMENT
6-11. LINE INPUT Pr／Pb LEVEL ADJUSTMENT
6-12. Y／C INPUT Pr LEVEL ADJUSTMENT
END

6-1. MACHINE CONDITION SETTING (W4 DEC & CTCM)

Set the switches on the FRONT PANEL as follows:

MODE ———————————— EE
VIDEO INPUT SELECT ———————————— LINE
VIDEO IN LEVEL ———————————— FIXED POSITION

6-2. SIGNAL SOURCE SETTING (W4 DEC & CTCM)

Confirm the output level of the signal Generator as follows:

1. COMPOSITE SIGNAL : 100% colour bar (without SET UP)
   VIDEO LEVEL = 0.7Vp-p
   SYNC LEVEL = 0.3Vp-p
2. COMPONENT SIGNAL : 100% colour bar (without SET UP)
   Y LEVEL = 0.7Vp-p
   SYNC LEVEL = 0.3Vp-p
   Pb LEVEL = 0.7Vp-p
   Pr LEVEL = 0.7Vp-p
3. Y/C SIGNAL : 100% colour bar (without SET UP)
   Y LEVEL = 0.7Vp-p
   SYNC LEVEL = 0.3Vp-p
   C LEVEL = 0.885Vp-p

6-3. 13.5MHz PLL ADJUSTMENT

(W4 DEC & CTCM)

TEST POINT	MODE	TAPE USED	M.EQ.	INPUT SIGNAL	ADJUSTMENT
TP701 TP703 TP704	E-E (EJECT)	BLANK ☐ TAPE ALIGNMENT ☐ TAPE	OSCILLOSCOPE	COMPONENT 100% COLOUR BAR	VL701 (PLL OFFS) VR702 (PLL POS)

ADJUSTMENT PROCEDURE & SPECIFICATION	
MACHINE CONDITION	1. Refer to the SECTION 6-1. 2. VIDEO INPUT SELECT : COMPONENT
Step 1. 1. SCOPE CH1 : TP703 SCOPE CH2 : TP704 2. OSCILLOSCOPE SETTING EXT TRIGGER : COMPOSITE SYNC from SIGNAL GENERATOR Delay Mode : 200ns/Div. 3. Adjust VR702 so that the "A" period and "B" period are the same timing and the "PW" period is 33 ± 3ns as shown.	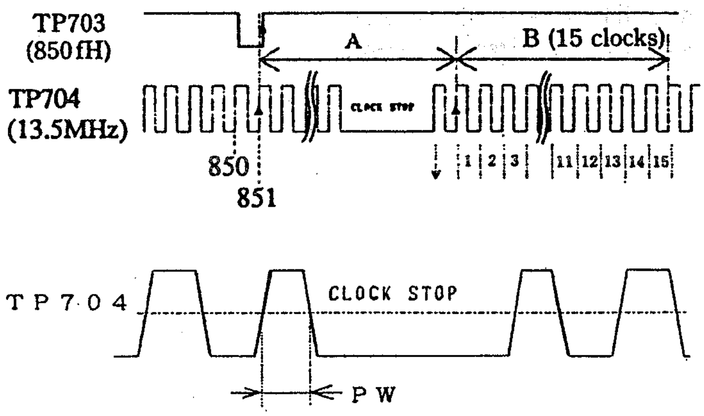 TP703 (850fH) A B (15 clocks) TP704 (13.5MHz) CLOCK STOP 850 851 1 2 3 11 12 13 14 15 TP704 CLOCK STOP PW SPECIFICATION: A : B = 100% : 100% ± 2%
Step 2. 1. SCOPE : TP701 2. Adjust VL701 so that the DC voltage of TP701 is 0V ± 0.2V.	

6-4. CLAMP REFERENCE ADJUSTMENT

(W4 DEC & CTCM)

TEST POINT	MODE	TAPE USED	M.EQ.	INPUT SIGNAL	ADJUSTMENT
TP601	E-E (EJECT)	☐ BLANK TAPE ☐ ALIGNMENT TAPE	OSCILLOSCOPE	COMPONENT 100% COLOUR BAR	VR601 (PB CLAMP REF) VR602 (PR CLAMP REF)

ADJUSTMENT PROCEDURE & SPECIFICATION	
MACHINE CONDITION	1. Refer to the SECTION 6-1. 2. VIDEO INPUT SELECT : COMPONENT
1. Adjust VR601 and VR602 so that level differences of "A" and "B" portion are minimum as shown.	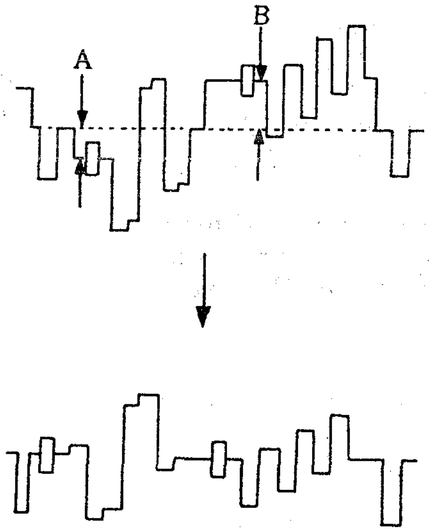

6-5. INPUT LEV 2 ADJUSTMENT

(W4 DEC & CTCM)

1. Preset VR219 to the 12 o'clock position.	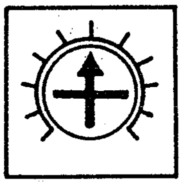

6-6. VIDEO A/D INPUT LEVEL ADJUSTMENT

(W4 DEC & CTCM)

TEST POINT	MODE	TAPE USED	M.EQ.	INPUT SIGNAL	ADJUSTMENT
TP41	E-E (EJECT)	☐ BLANK TAPE ☐ ALIGNMENT TAPE	OSCILLOSCOPE	LINE INPUT 100% COLOUR BAR	VR1 (INPUT LEV 1)

ADJUSTMENT PROCEDURE & SPECIFICATION	
MACHINE CONDITION	Refer to the SECTION 6-1.
Step 1. 1. SCOPE : TP41 2. Adjust VR1 so that the input signal level (A) is 1.4Vp-p ± 0.02Vp-p as shown.	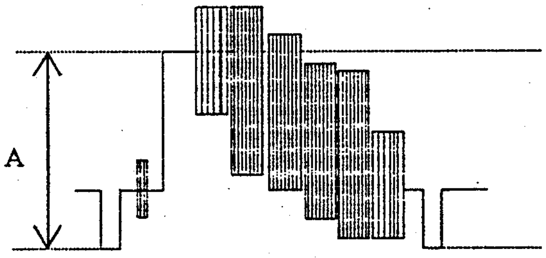 A = 1.4Vp-p ± 0.02Vp-p

6-7. COMPONENT INPUT Y LEVEL CONFIRMATION

(W4 DEC & CTCM)

TEST POINT	MODE	TAPE USED	M.EQ.	INPUT SIGNAL	ADJUSTMENT
TP504	E-E (EJECT)	☐ BLANK TAPE ☐ ALIGNMENT TAPE	OSCILLOSCOPE	COMPONENT 100% COLOUR BAR	----------

ADJUSTMENT PROCEDURE & SPECIFICATION

MACHINE CONDITION	1. Refer to the SECTION 6-1. 2. VIDEO INPUT SELECT : COMPONENT

Step 1.

1. SCOPE : TP504
2. Confirm that the Y LEVEL is 550mVp-p ± 30mVp-p as shown.

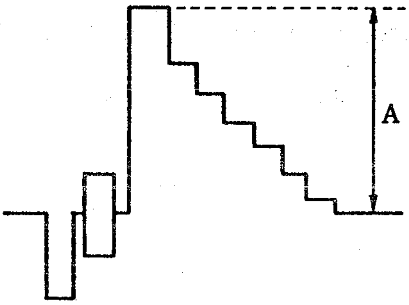

A = 550mVp-p ± 30mVp-p

6-8. LINE INPUT Y LEVEL ADJUSTMENT

(W4 DEC & CTCM)

TEST POINT	MODE	TAPE USED	M.EQ.	INPUT SIGNAL	ADJUSTMENT
TP504	E-E (EJECT)	☐ BLANK TAPE ☐ ALIGNMENT TAPE	OSCILLOSCOPE	LINE INPUT 100% COLOUR BAR	VR141 (Y LEV 1)

ADJUSTMENT PROCEDURE & SPECIFICATION

MACHINE CONDITION	1. Refer to the SECTION 6-1.

Step 1.

1. SCOPE : TP504
2. Adjust VR141 so that the Y level (A) safisfies the following conditions.
   1) The Y level (A) is 550mVp-p ± 30mVp-p as shown.
   2) The difference between the Y level (A) of this adjustment and the Y level (A) of the COMPONENT INPUT Y LEVEL (6-7) is within±11mVp-p.

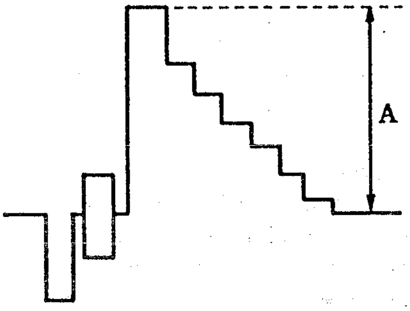

A = 550mVp-p ± 30mVp-p

6-9. Y/C INPUT Y LEVEL ADJUSTMENT

(W4 DEC & CTCM)

TEST POINT	MODE	TAPE USED	M.EQ.	INPUT SIGNAL	ADJUSTMENT
TP504	E-E (EJECT)	☐ BLANK TAPE ☐ ALIGNMENT TAPE	OSCILLOSCOPE	YC INPUT 100% COLOUR BAR	VR142 (Y LEV 2)

ADJUSTMENT PROCEDURE & SPECIFICATION

MACHINE CONDITION	1. Refer to the SECTION 6-1. 2. VIDEO INPUT SELECT : YC 3. LINE INPUT Y LEVEL ADJ. (6-8) should be completed before this adjustment is done.

Step 1.

1. SCOPE : TP504
2. Adjust VR142 so that the Y level (A) satisfies the following conditions.
   1) The Y level (A) is 550mVp-p ± 30mVp-p as shown.
   2) The difference between the Y level (A) of this adjustment and the Y level (A) of the COMPONENT INPUT Y LEVEL (6-7) is within±11mVp-p.

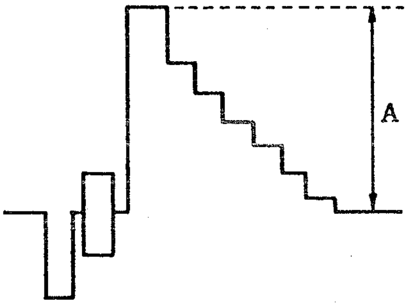

A = 550mVp-p ± 30mVp-p

6-10. COMPONENT INPUT Pr/Pb LEVEL ADJUSTMENT

(W4 DEC & CTCM)

TEST POINT	MODE	TAPE USED	M.EQ.	INPUT SIGNAL	ADJUSTMENT
TP601	E-E (EJECT)	BLANK ☐ TAPE ALIGNMENT ☐ TAPE	OSCILLOSCOPE	COMPONENT 100% COLOUR BAR	VR501 (Pr LEV 2) VR502 (Pb LEV 2)

ADJUSTMENT PROCEDURE & SPECIFICATION

MACHINE CONDITION	1. Refer to the SECTION 6-1. 2. VIDEO INPUT SELECT : COMPONENT

Step 1.

1. SCOPE : TP601

Step 2.

1. Confirm that the sync level (A) is 650mVp-p ± 100mVp-p as shown.
2. Set the sync level (A) to 6.5 divisions on the oscilloscope display (uncalibrated).
3. Confirm that the B and C levels are as shown below.
   - B = 7.0 divisions ± 0.2 divisions
   - C = 7.0 divisions ± 0.2 divisions
4. If it is not within specification, adjust VR501 so that the Pr level (B) is 7.0 divisions ± 0.2 divisions and adjust VR502 so that the Pb level (C) is 7.0 divisions ± 0.2 divisions.
5. After this adjustment, confirm the Burst level (D) is 3.0 divisions ± 0.2 divisions.

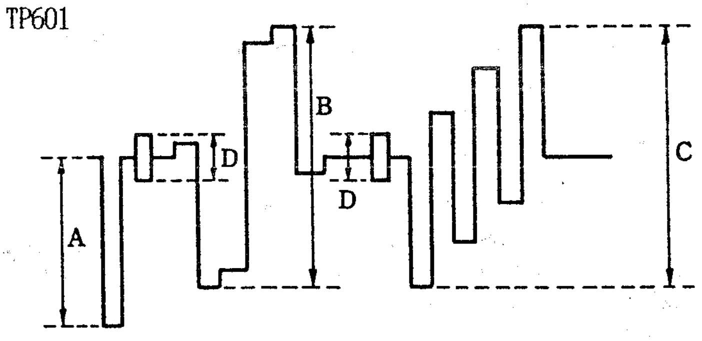

A = 650mVp-p ± 100mVp-p

6-11. LINE INPUT Pr/Pb LEVEL ADJUSTMENT (W4 DEC & CTCM)

TEST POINT	MODE	TAPE USED	M.EQ.	INPUT SIGNAL	ADJUSTMENT
TP601	E-E (EJECT)	BLANK ☐ TAPE ALIGNMENT ☐ TAPE	OSCILLOSCOPE	LINE INPUT 100% COLOUR BAR	VR215 (PR LEV 1) VR213 (PB LEV 1)

ADJUSTMENT PROCEDURE & SPECIFICATION

MACHINE CONDITION	1. Refer to the SECTION 6-1. 2. COMPONENT INPUT Pr/Pb LEVEL ADJ. (6-10) should be completed before this adjustment is done.

Step 1.

1. SCOPE : TP601
2. Set the sync level (A) to 6.5 divisions on the oscilloscope display (uncalibrated).
3. Confirm that the B and C levels are as shown below.
   B = 7.0 divisions ± 0.2 divisions
   C = 7.0 divisions ± 0.2 divisions
4. If it is not within specification, adjust VR215 so that the Pr level (B) is 7.0 divisions ± 0.2 divisions and adjust VR213 so that the Pb level (C) is 7.0 divisions ± 0.2 divisions.

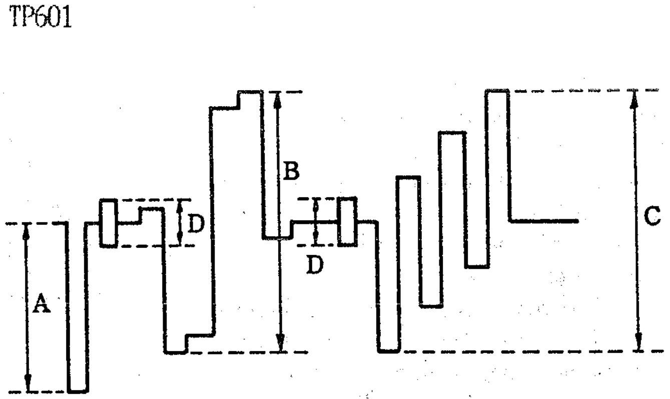

6-12. Y/C INPUT Pr LEVEL ADJUSTMENT (W4 DEC & CTCM)

TEST POINT	MODE	TAPE USED	M.EQ.	INPUT SIGNAL	ADJUSTMENT
TP601	E-E (EJECT)	BLANK ☐ TAPE ALIGNMENT ☐ TAPE	OSCILLOSCOPE	YC INPUT 100% COLOUR BAR	VR165 (C LEV)

ADJUSTMENT PROCEDURE & SPECIFICATION

MACHINE CONDITION	1. Refer to the SECTION 6-1. 2. VIDEO INPUT SELECT : YC 3. The following adjustment should be completed before this adjustment is done. 1) COMPONENT INPUT Pr/Pb LEVEL ADJ. (6-10) 2) LINE INPUT Pr/Pb LEVEL ADJ. (6-11)

Step 1.

1. SCOPE : TP601
2. Set the sync level (A) to 6.5 divisions on the oscilloscope display (uncalibrated).
3. Confirm that the B level is 7.0 divisions ± 0.2 divisions.
4. If it is not within specification, adjust VR165 so that the Pr level (B) is 7.0 divisions ± 0.2 divisions.

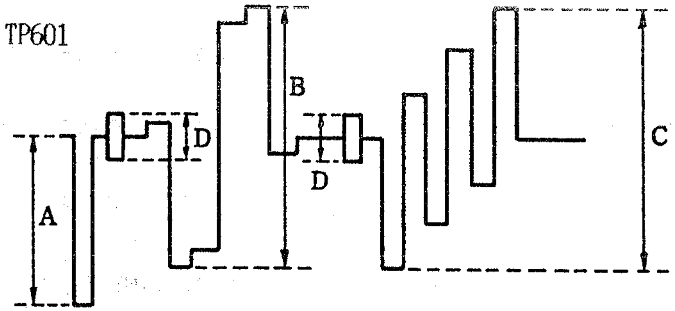

13. DEC & CTCM (W4) BOARD (2／2)

DEC & CTCM (2／2) SECTION FLOWCHART

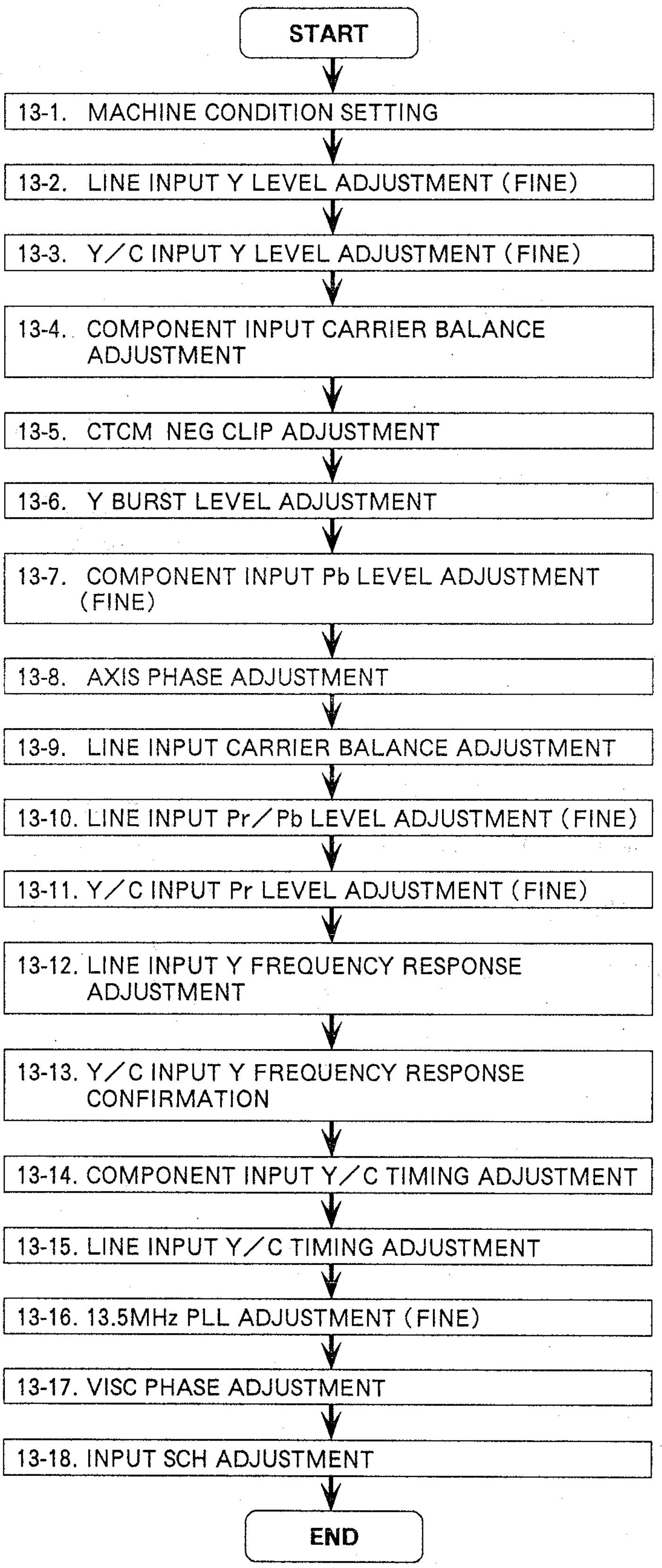
START
13-1. MACHINE CONDITION SETTING
13-2. LINE INPUT Y LEVEL ADJUSTMENT (FINE)
13-3. Y／C INPUT Y LEVEL ADJUSTMENT (FINE)
13-4. COMPONENT INPUT CARRIER BALANCE ADJUSTMENT
13-5. CTCM NEG CLIP ADJUSTMENT
13-6. Y BURST LEVEL ADJUSTMENT
13-7. COMPONENT INPUT Pb LEVEL ADJUSTMENT (FINE)
13-8. AXIS PHASE ADJUSTMENT
13-9. LINE INPUT CARRIER BALANCE ADJUSTMENT
13-10. LINE INPUT Pr／Pb LEVEL ADJUSTMENT (FINE)
13-11. Y／C INPUT Pr LEVEL ADJUSTMENT (FINE)
13-12. LINE INPUT Y FREQUENCY RESPONSE ADJUSTMENT
13-13. Y／C INPUT Y FREQUENCY RESPONSE CONFIRMATION
13-14. COMPONENT INPUT Y／C TIMING ADJUSTMENT
13-15. LINE INPUT Y／C TIMING ADJUSTMENT
13-16. 13.5MHz PLL ADJUSTMENT (FINE)
13-17. VISC PHASE ADJUSTMENT
13-18. INPUT SCH ADJUSTMENT
END

13-1. MACHINE CONDITION SETTING

(W4 DEC & CTCM)

Set the switches on the Front Panel of follows:

MODE ———————————————— EE
VIDEO INPUT SELECT ———————————— LINE
VIDEO IN LEVEL ———————————— FIXED POSITION

13-2. LINE INPUT Y LEVEL ADJUSTMENT (FINE)

(W4 DEC & CTCM)

TEST POINT	MODE	TAPE USED	M.EQ.	INPUT SIGNAL	ADJUSTMENT
VIDEO 1 OUT (AU-W35H) VIDEO 2 OUT (AU-66H/65H) (W/75ohm Termination)	E-E (EJECT)	———	WAVEFORM MONITOR	LINE INPUT 100% COLOUR BAR	VR141 (Y LEV 1)

Step 1. MACHINE CONDITION	1. Refer to the SECTION 13-1.
Step 2. 1. Adjust VR141 so that the Y level (V) is 0.7 ± 0.016Vp-p as shown.	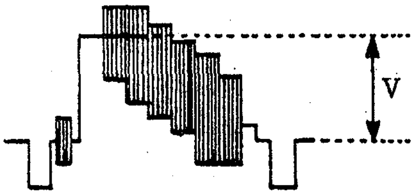 V = 0.7 ± 0.016Vp-p

13-3. Y/C INPUT Y LEVEL ADJUSTMENT (FINE)

(W4 DEC & CTCM)

TEST POINT	MODE	TAPE USED	M.EQ.	INPUT SIGNAL	ADJUSTMENT
VIDEO 1 OUT (AU-W35H) VIDEO 2 OUT (AU-66H/65H) (W/75ohm Termination)	E-E (EJECT)	------	WAVEFORM MONITOR	YC INPUT 100% COLOUR BAR	VR142 (Y LEV 2)

Step 1. MACHINE CONDITION	1. Refer to the SECTION 13-1. 2. VIDEO INPUT SELECT : YC
Step 2. 1. Adjust VR142 so that the Y level (V) is 0.7 ± 0.016Vp-p as shown.	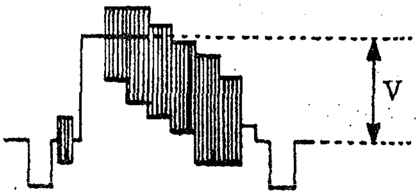 V = 0.7 ± 0.016Vp-p

13–4. COMPONENT INPUT CARRIER BALANCE ADJUSTMENT

(W4 DEC & CTCM)

TEST POINT	MODE	TAPE USED	M.EQ.	INPUT SIGNAL	ADJUSTMENT
COMPONENT Pb/Pr OUT	E-E (EJECT)	☐ BLANK TAPE ☐ ALIGNMENT TAPE	OSCILLOSCOPE	COMPONENT 100% COLOUR BAR	VR601 (PB CLAMP REF) VR602 (PR CLAMP REF)

ADJUSTMENT PROCEDURE & SPECIFICATION	
MACHINE CONDITION	1. Refer to the SECTION 13-1. 2. VIDEO INPUT SELECT : COMPONENT
Step 1. 1. SCOPE : COMPONENT Pb OUT 2. Adjust VR601 so that the burst portion of Pb signal is "flat" as shown.	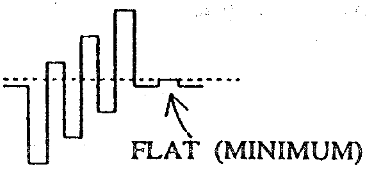
Step 2. 1. SCOPE : COMPONENT Pr OUT 2. Adjust VR602 so that the burst portion of Pr signal is "flat" as shown.	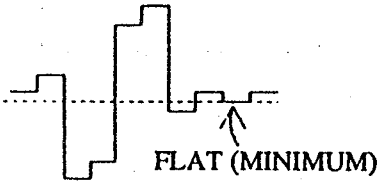

13-5. CTCM NEG CLIP ADJUSTMENT

(W4 DEC & CTCM)

TEST POINT	MODE	TAPE USED	M.EQ.	INPUT SIGNAL	ADJUSTMENT
TP601	E-E (EJECT)	☐ BLANK TAPE ☐ ALIGNMENT TAPE	OSCILLOSCOPE	COMPONENT RAMP (OVERSIZE)	VR503 (NEG CLIP)

ADJUSTMENT PROCEDURE & SPECIFICATION	
MACHINE CONDITION	1. Refer to the SECTION 13-1. 2. VIDEO INPUT SELECT : COMPONENT
1. Adjust VR503 so that the A portion is 60mVp-p ± 5mVp-p as shown.	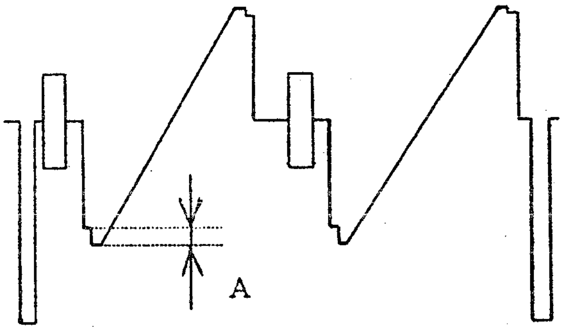 A = 60mVp-p ± 5mVp-p

13-6. Y BURST LEVEL ADJUSTMENT

(W4 DEC & CTCM)

TEST POINT	MODE	TAPE USED	M.EQ.	INPUT SIGNAL	ADJUSTMENT
TP504	E-E (EJECT)	☐ BLANK TAPE ☐ ALIGNMENT TAPE	OSCILLOSCOPE	COMPONENT 100% COLOUR BAR	VR906 (Y BU LEV)

ADJUSTMENT PROCEDURE & SPECIFICATION	
MACHINE CONDITION	1. Refer to the SECTION 13-1. 2. VIDEO INPUT SELECT : COMPONENT
Step 1. 1. SCOPE : TP504 2. Set the sync level (A) to 3.0 divisions on the oscilloscope display (uncalibrated).	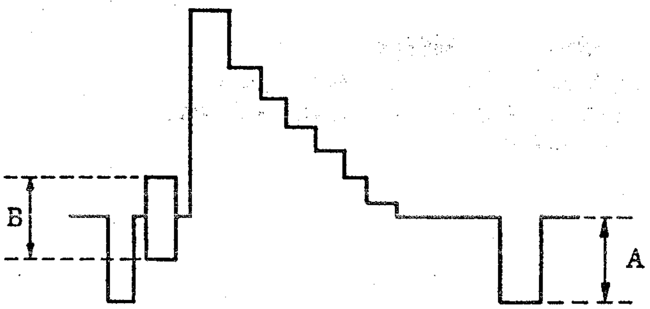 A = 3.0 DIVISIONS B = 3.0 ± 0.1 DIVISIONS
Step 2. 1. Adjust the Burst level (B) is 3.0 ± 0.1 divisions against the sync level (A) as shown.	

13-7. COMPONENT INPUT Pb LEVEL ADJUSTMENT (FINE)

(W4 DEC & CTCM)

TEST POINT	MODE	TAPE USED	M.EQ.	INPUT SIGNAL	ADJUSTMENT
COMPONENT Pb OUT (W/75ohm Termination)	E-E (EJECT)	———	OSCILLOSCOPE	COMPONENT 100% COLOUR BAR	VR502 (Pb LEV 2)

MACHINE CONDITION	1. Refer to the SECTION 13-1. 2. VIDEO INPUT SELECT : COMPONENT
Step 1. 1. Adjust VR502 so that the Pb level (B) is 0.7 ± 0.016Vp-p as shown.	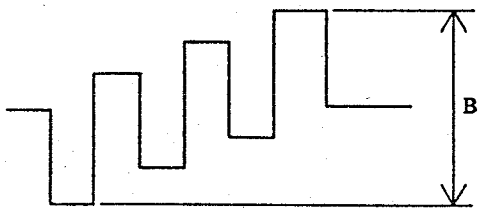

13-8. AXIS PHASE ADJUSTMENT

(W4 DEC & CTCM)

TEST POINT	MODE	TAPE USED	M.EQ.	INPUT SIGNAL	ADJUSTMENT
COMPONENT Pb/Pr OUT (W/75ohm Termination)	E-E (EJECT)	BLANK ☐ TAPE ALIGNMENT ☐ TAPE	OSCILLOSCOPE	LINE IN 100% COLOUR BAR	VR218 (AXIS 1) VC401 (AXIS 2)

ADJUSTMENT PROCEDURE & SPECIFICATION	
MACHINE CONDITION	1. Refer to the SECTION 13-1.
Step 1. 1. SCOPE : COMPONENT Pr OUT 2. Adjust VR218 so that the overlap portion of waveform becomes minimum as a whole.	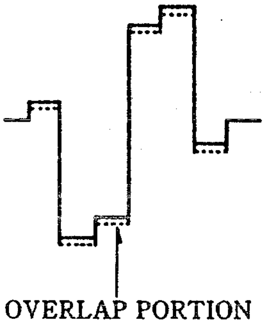
Step 2. 1. SCOPE : COMPONENT Pb OUT 2. Adjust VC401 so that the overlap portion of waveform becomes minimum as a whole.	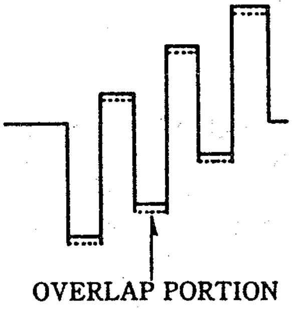

13-9. LINE INPUT CARRIER BALANCE ADJUSTMENT

(W4 DEC & CTCM)

TEST POINT	MODE	TAPE USED	M.EQ.	INPUT SIGNAL	ADJUSTMENT
COMPONENT Pb/Pr OUT	E-E (EJECT)	BLANK ☐ TAPE ALIGNMENT ☐ TAPE	OSCILLOSCOPE	LINE IN 100% COLOUR BAR	VR216 (PB BLK DC) VR217 (PR BLK DC)

ADJUSTMENT PROCEDURE & SPECIFICATION	
MACHINE CONDITION	1. Refer to the SECTION 13-1. 2. The following adjustments should be completed before this adjustment is done. 1) CARRIER LEAKAGE ADJ. (9-16) 2) COMPONENT INPUT CARRIER BALANCE ADJ. (13-4)
Step 1. 1. SCOPE : COMPONENT Pb OUT 2. Adjust VR216 so that the burst portion of Pb signal is"flat" as shown.	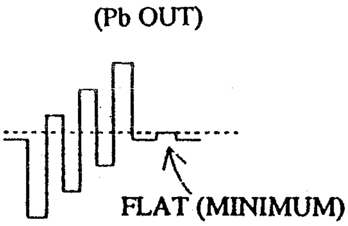
Step 2. 1. SCOPE : COMPONENT Pr OUT 2. Adjust VR217 so that the burst portion of Pr signal is "flat" as shown.	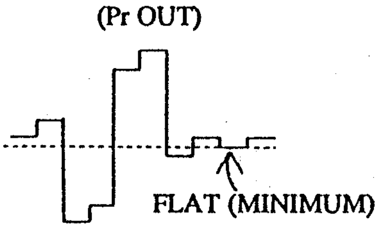

13-10. LINE INPUT Pr/Pb LEVEL ADJUSTMENT (FINE)

(W4 DEC & CTCM)

TEST POINT	MODE	TAPE USED	M.EQ.	INPUT SIGNAL	ADJUSTMENT
COMPONENT Pb/Pr OUT (W/75ohm Termination)	E-E (EJECT)	☐ BLANK TAPE ☐ ALIGNMENT TAPE	OSCILLOSCOPE	LINE INPUT 100% COLOUR BAR	VR213 (PB LEV 1) VR215 (PR LEV 1)

ADJUSTMENT PROCEDURE & SPECIFICATION	
MACHINE CONDITION	1. Refer to the SECTION 13-1. 2. The following adjustments should be completed before this adjustment is done. 1) COMPONENT Pb LEVEL ADJ. (9-9) 2) COMPONENT Pr LEVEL ADJ. (9-11) 3) COMPONENT INPUT Pb LEVEL ADJ. (13-7)
Step 1. 1. SCOPE : COMPONENT Pb OUT 2. Adjust VR213 so that the Pb level (G) is 0.7 ± 0.016Vp-p as shown.	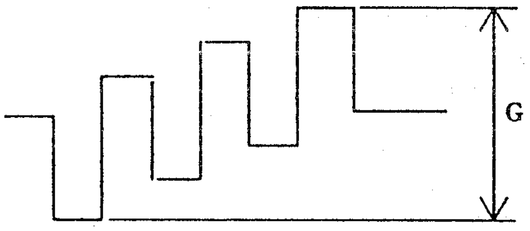 G = 0.7 ± 0.016Vp-p
Step 2. 1. SCOPE : COMPONENT Pr OUT 2. Adjust VR215 so that the Pr level (E) is 0.7 ± 0.016Vp-p as shown.	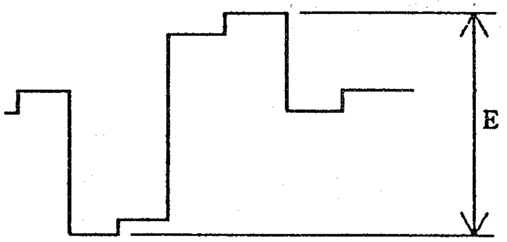 E = 0.7 ± 0.016Vp-p

13-11. Y/C INPUT Pr LEVEL ADJUSTMENT (FINE)

(W4 DEC & CTCM)

TEST POINT	MODE	TAPE USED	M.EQ.	INPUT SIGNAL	ADJUSTMENT
COMPONENT Pr OUT (W/75ohm Termination)	E-E (EJECT)	———	OSCILLOSCOPE	YC IN 100% COLOUR BAR	VR165 (C LEV)
MACHINE CONDITION			1. Refer to the SECTION 13-1. 2. VIDEO INPUT SELECT : YC		

Step 1.

1. Adjust VR165 so that the Pr level (A) is 0.7 ± 0.016Vp-p as shown.

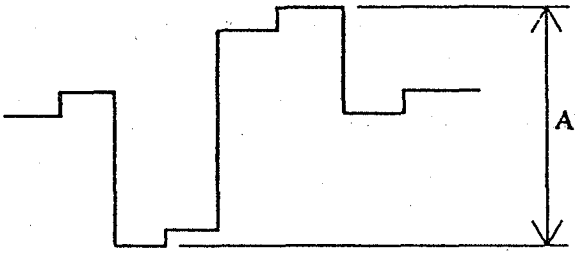

13-12. LINE INPUT Y FREQUENCY RESPONSE ADJUSTMENT

(W4 DEC & CTCM)

TEST POINT	MODE	TAPE USED	M.EQ.	INPUT SIGNAL	ADJUSTMENT
COMPONENT Y OUT (W/75ohm Termination)	E-E (EJECT)	BLANK ☐ TAPE	OSCILLOSCOPE OR WAVEFORM MONITOR	Step 1. COMPONENT 60% H.SWEEP (NO BURST)	VC141 (Y FREQ)
		ALIGNMENT ☐ TAPE		Step 2. LINE IN 60% H.SWEEP (NO BURST)	

ADJUSTMENT PROCEDURE & SPECIFICATION

MACHINE CONDITION

1. Refer to the SECTION 13-1.
2. The following adjustments should be completed before this adjustment is done.
   1) Y PLAYBACK FREQUENCY RESPONSE ADJ. (7-39)
   2) Y OUTPUT FREQUENCY RESPONSE ADJ. (9-24)

Step 1.

1. INPUT POINT : COMPONENT IN
2. VIDEO INPUT SELECT : COMPONENT
3. Check the frequency response 0.5MHz : 5MHz (0.5MHz = 100% : Reference) and notate it.

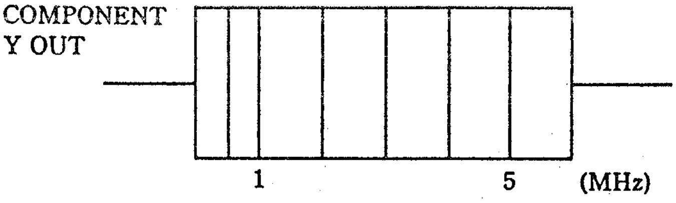

0.5MHz = 100% (Reference)
5.0MHz = A%

Step 2.

1. INPUT POINT : LINE IN
2. VIDEO INPUT SELECT : LINE
3. Adjust VC141 so that the frequency response is as shown.

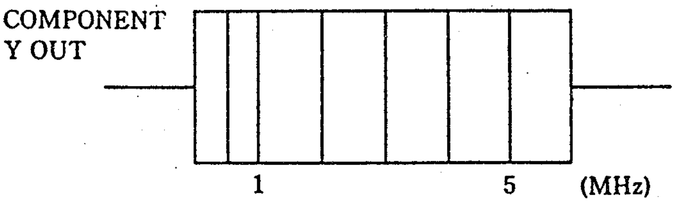

0.5MHz = 100% (Reference)
5.0MHz = A% ± 2%

Note : A is the frequency response at 5.0MHz of the COMPONENT input.

13-13. YC INPUT Y FREQUENCY RESPONSE CONFIRMATION

(W4 DEC & CTCM)

TEST POINT	MODE	TAPE USED	M.EQ.	INPUT SIGNAL	ADJUSTMENT
COMPONENT Y OUT (W/75ohm Termination)	E-E (EJECT)	☐ BLANK TAPE	OSCILLOSCOPE OR WAVEFORM MONITOR	Step 1. COMPONENT 60% H.SWEEP (NO BURST)	------
		☐ ALIGNMENT TAPE		Step 2. YC IN 60% H.SWEEP (NO BURST)	

ADJUSTMENT PROCEDURE & SPECIFICATION

MACHINE CONDITION

1. Refer to the SECTION 13-1.
2. The following adjustments should be completed before this CONFIRMATION is done.
   1) Y PLAYBACK FREQUENCY RESPONSE ADJ. (7-39)
   2) Y OUTPUT FREQUENCY RESPONSE ADJ. (9-24)
   3) LINE INPUT Y FREQUENCY RESPONSE ADJ. (13-12)

Step 1.

1. INPUT POINT : COMPONENT IN
2. VIDEO INPUT SELECT : COMPONENT
3. Check the frequency response 0.5MHz : 5MHz (0.5MHz = 100% : Reference) and notate it.

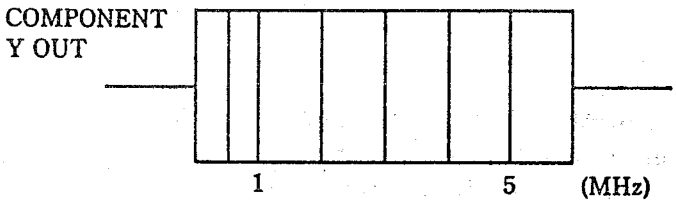

0.5MHz = 100% (Reference)
5.0MHz = A%

Step 2.

1. INPUT POINT : YC IN
2. VIDEO INPUT SELECT : YC
3. Confirm that the frequency response is as shown.

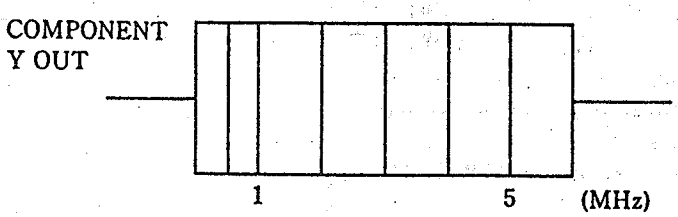

0.5MHz = 100% (Reference)
5.0MHz = A% +5/-10%

Note : A is the frequency response at 5.0MHz of the COMPONENT input.

13-14(A). COMPONENT INPUT Y/C TIMING ADJUSTMENT (BY USING WAVEFORM MONITOR)

(W4 DEC & CTCM)

TEST POINT	MODE	TAPE USED	M.EQ.	INPUT SIGNAL	ADJUSTMENT
COMPONENT Y OUT Pb OUT Pr OUT	SELF REC/PB	BLANK ■ TAPE ALIGNMENT ☐ TAPE	WAVEFORM MONITOR	COMPONENT PULSE & BAR (MOD. 20T)	VC501 (PR TMG 2) VC502 (PB TMG 2)

ADJUSTMENT PROCEDURE & SPECIFICATION

MACHINE CONDITION	1. Refer to the SECTION 13-1. 2. VIDEO INPUT SELECT : COMPONENT 3. COMPONENT Y/C TIMING ADJ. (9-18) should be completed before this adjustment is done.

Step 1.

1. WAVEFORM MONITOR CONDITION

RESPONSE : DIFFD STEP mode
VOLTS FULL SCALE : MAX (UNCAL)
DISPLAY : × 1 (5)
MAGNIFIER : ×50 (0.1)
TRIGGER : VIDEO OUT OF VTR

Step 2.

Note:
The COMPONENT OUTPUT CABLE LENGTH should be all the same length.

1. Make a recording, then playback the just recorded portion.
2. WFM MONITOR
   CHA : COMPONENT Y OUT
   CHB : COMPONENT Pr OUT
   EXT SYNC CH1 : VIDEO OUT
   CH2 : VIDEO OUT
3. Observe the falling portion of the modulated 20T pulse signal.
4. Adjust the vertical and horizontal position of the WFM Monitor so that the centre line of falling edge is set to 0.3 axis as shown.
5. Change the Input Select of the WFM Switch from the Ach (COMPONENT Y OUT) to the Bch (COMPONENT Pr OUT).
6. Measure the difference between the Y and Pr signal timing.
7. If it is not within ± 20ns, adjust VC501.
8. WFM MONITOR
   CHA : COMPONENT Y OUT
   CHB : COMPONENT Pb OUT
9. Measure the difference between the Y and Pb signal timing.
10. If it is not within±20ns, adjust VC502 and repeat #1 thru #10 of Step 2.

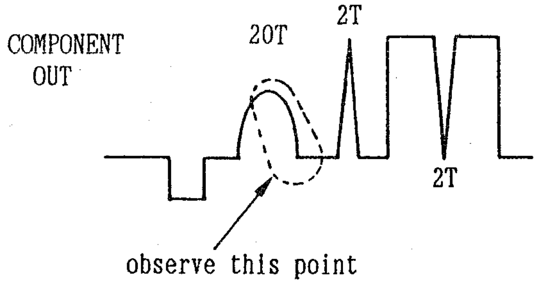

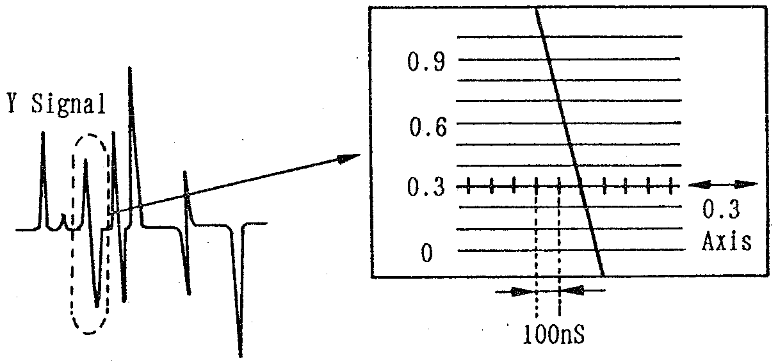

SPECIFICATION : Y/C TIMING = ± 20ns

13-14(B). COMPONENT INPUT Y/C TIMING ADJUSTMENT (BY USING OSCILLOSCOPE)

(W4 DEC & CTCM)

TEST POINT	MODE	TAPE USED	M.EQ.	INPUT SIGNAL	ADJUSTMENT
COMPONENT Y OUT Pb OUT Pr OUT	SELF REC/PB	■ BLANK TAPE ☐ ALIGNMENT TAPE	OSCILLOSCOPE	COMPONENT 100% COLOUR BAR	VC501 (PR TMG 2) VC502 (PB TMG 2)

ADJUSTMENT PROCEDURE & SPECIFICATION

MACHINE CONDITION	1. Refer to the SECTION 13-1. 2. VIDEO INPUT SELECT : COMPONENT 3. COMPONENT Y/C TIMING ADJ. (9-18) should be completed before this adjustment is done.

Step 1.

Note:
COMPONENT OUTPUT CABLE LENGTH should be the same length.

1. Make a recording, then playback the just recorded portion.
2. SCOPE CH1 : COMPONENT Y OUT
   SCOPE CH2 : COMPONENT Pr OUT
3. Confirm that the Y/Pr Timing of "A" portion is less than 20ns as shown.
4. If it is not within specification, adjust VC501 so that the Y/Pr Timing of "A" portion is less than 20ns.
5. SCOPE CH1 : COMPONENT Y OUT
   SCOPE CH2 : COMPONENT Pb OUT
6. Confirm that the Y/Pb Timing of "B" portion is less than 20ns as shown.
7. If it is not within specification, adjust VC502 so that the Y/Pb Timing of "B" portion is less than 20ns and repeat #1 thru #7.

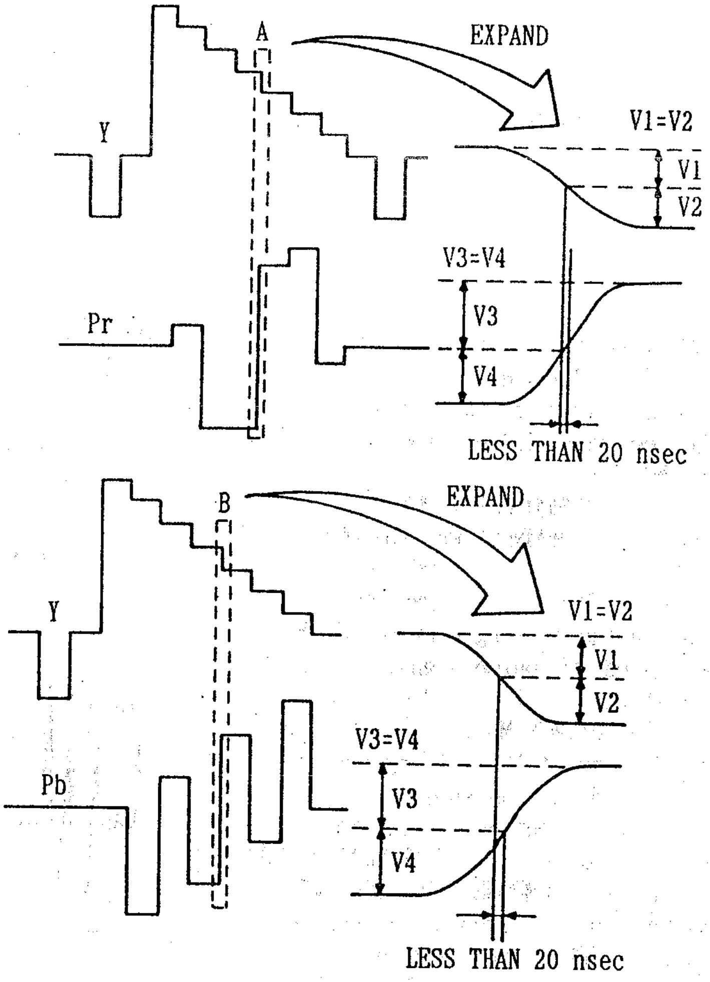

13–15(A). LINE INPUT Y/C TIMING ADJUSTMENT (BY USING WAVEFORM MONITOR)

(W4 DEC & CTCM)

TEST POINT	MODE	TAPE USED	M.EQ.	INPUT SIGNAL	ADJUSTMENT
COMPONENT Y OUT Pb OUT Pr OUT	SELF REC/PB	BLANK ■ TAPE ALIGNMENT ☐ TAPE	WAVEFORM MONITOR	LINE IN PULSE & BAR (MOD. 20T)	VR214 (PR TMG 1) VR212 (PB TMG 1)

ADJUSTMENT PROCEDURE & SPECIFICATION

MACHINE CONDITION

1. Refer to the SECTION 13-1.
2. The following adjustments should be completed before this adjustment is done.
   1) COMPOSITE Y/C TIMING ADJ. (9-19)
   2) COMPONENT INPUT Y/C TIMING ADJ. (13-14)

Step 1.

1. WAVEFORM MONITOR CONDITION

RESPONSE : DIFFD STEP mode
VOLTS FULL SCALE : MAX (UNCAL)
DISPLAY : × 1 (5)
MAGNIFIER : ×50 (0.1)
TRIGGER : VIDEO OUT OF VTR

Step 2.

Note:
COMPONENT OUTPUT CABLE LENGTH should be the same length.

1. Make a recording, then playback the just recorded portion.
2. WFM MONITOR
   CHA : COMPONENT Y OUT
   CHB : COMPONENT Pr (Pb) OUT
   EXT SYNC CH A : VIDEO OUT
   CH B : VIDEO OUT
3. Observe the falling portion of the modulated 20T pulse signal.
4. Adjust the vertical and horizontal position of WFM Monitor so that the centre line of the falling edge is set to 0.3 axis as shown.
5. Change the Input Select of WFM Switch from the Ach (COMPONENT Y OUT) to the Bch (COMPONENT Pr (Pb) OUT).
6. Measure the difference between the Y and Pr (Pb) signal timing.
7. If it is not within ± 20ns, adjust VR214 (Pr) and VR212 (Pb) and repeat #1 thru #7 of Step 2.

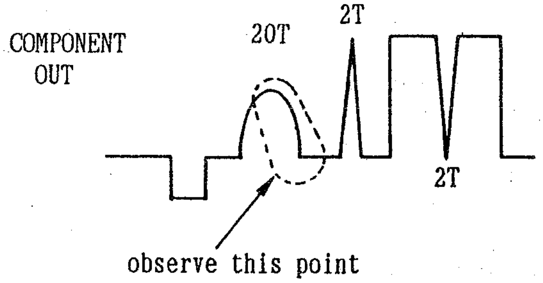

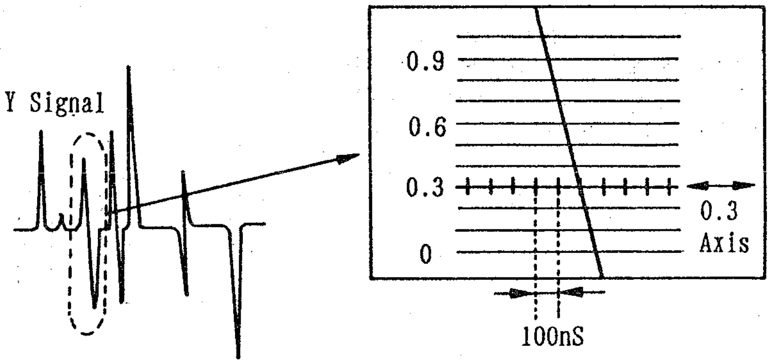

13-15(B). LINE INPUT Y/C TIMING ADJUSTMENT (BY USING OSCILLOSCOPE)

(W4 DEC & CTCM)

TEST POINT	MODE	TAPE USED	M.EQ.	INPUT SIGNAL	ADJUSTMENT
COMPONENT Y OUT Pb OUT Pr OUT	SELF REC/PB	BLANK ■ TAPE ALIGNMENT ☐ TAPE	OSCILLOSCOPE	LINE IN COLOUR BAR	VR214 (PR TMG 1) VR212 (PB TMG 1)

ADJUSTMENT PROCEDURE & SPECIFICATION

MACHINE CONDITION	1. Refer to the SECTION 13-1. 2. The following adjustments should be completed before this adjustment is done. 1) COMPOSITE Y/C TIMING ADJ. (9-19) 2) COMPONENT INPUT Y/C TIMING ADJ. (13-14)

Step 1.

Note:
COMPONENT OUTPUT CABLE LENGTH should be the same length.

1. Make a recording for a few minutes.
2. Playback the just recorded portion.
3. SCOPE CH1 : COMPONENT Y OUT
   SCOPE CH2 : COMPONENT Pr OUT
4. Confirm that the Y/Pr Timing of the "A" portion is less than 20ns as shown.
5. If it is not within specification, adjust VR214 (Pr) so that the Y/Pr Timing of the "A" portion is less than 20ns.
6. SCOPE CH1 : COMPONENT Y OUT
   SCOPE CH2 : COMPONENT Pb OUT
7. Confirm that the Y/Pb Timing of the "B" portion is less than 20ns as shown.
8. If it is not within specification, adjust VR212 (Pb) so that the Y/Pb Timing of "B" portion is less than 20ns and repeat #1 thru #8.

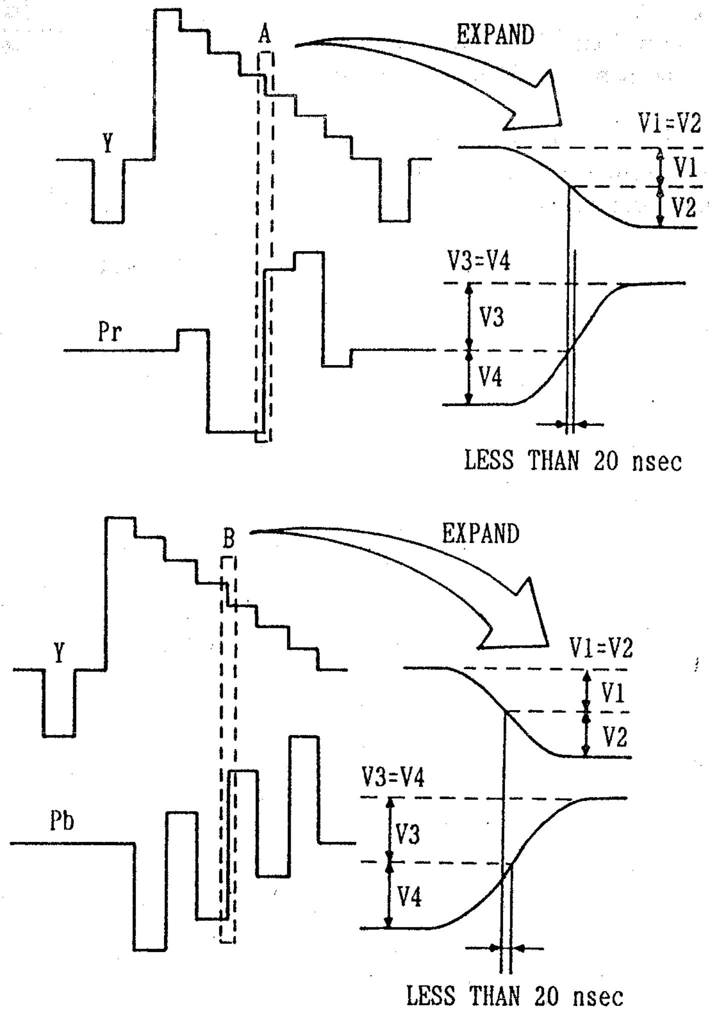

13-16. 13.5MHz PLL ADJUSTMENT (FINE)

(W4 DEC & CTCM)

TEST POINT	MODE	TAPE USED	M.EQ.	INPUT SIGNAL	ADJUSTMENT
VIDEO 1 OUT (AU-W35H) (W/75ohm Termination) VIDEO 2 OUT (AU-66H/65H) (W/75ohm Termination)	SELF REC/PB	■ BLANK TAPE ☐ ALIGNMENT TAPE	VECTORSCOPE	LINE IN 100% COLOUR BAR WITH VITS SIGNAL	VR701 (SYNC φ)

ADJUSTMENT PROCEDURE & SPECIFICATION	
MACHINE CONDITION	1. Refer to the SECTION 13-1.

Step 1.

1. Place the unit in the record mode.
2. Then playback the just recorded portion.
3. Confirm that the VITS signal phase is the same as the-U axis as shown (0° ± 2°).
4. If it is not within specification, fine adjust VR701 so that the phase difference is 0° ± 2°.

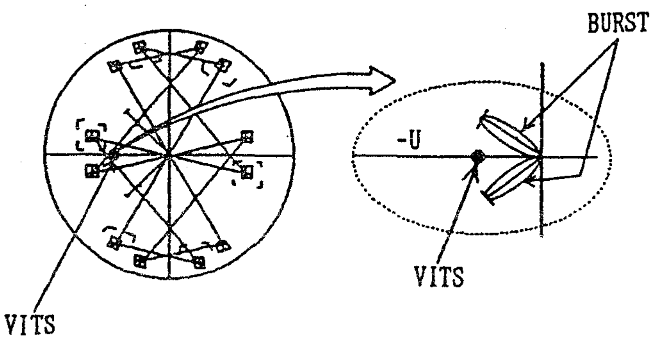

SPECIFICATION : Phase difference = 0° ± 2° (degrees)

13-17. VISC PHASE ADJUSTMENT

(W4 DEC & CTCM)

TEST POINT	MODE	TAPE USED	M.EQ.	INPUT SIGNAL	ADJUSTMENT
VIDEO 1 OUT (AU-W35H) (W/75ohm Termination) VIDEO 2 OUT (AU-66H/65H) (W/75ohm Termination)	E-E (EJECT)	BLANK ☐ TAPE ALIGNMENT ☐ TAPE	VECTORSCOPE	LINE IN 100% COLOUR BAR WITH VITS SIGNAL	VR81 (VISC PHA)

ADJUSTMENT PROCEDURE & SPECIFICATION

MACHINE CONDITION	1. Refer to the SECTION 13-1. 2. STD/NSTD SELECT : STD (Set-up Menu No.1011 → 00 Front Switch)

Step 1.

1. SW7 (on W1) : OFF
2. Confirm that the phase of the VISC signal and the VITS signal are equal.
3. If it is not within specification, adjust VR81 so that the phase of the VISC signal and the VITS signal are the same.
4. After this adjustment, set SW7 (on W1) to the "ON" position.

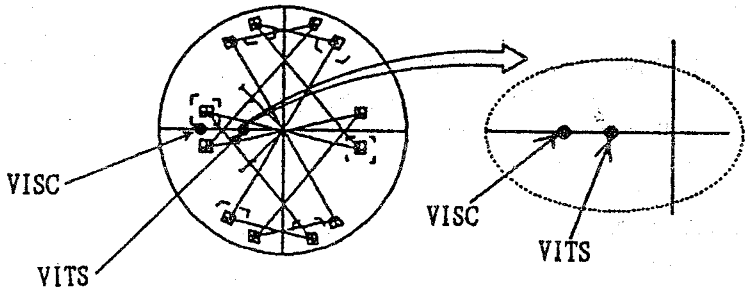

SPECIFICATION:
PHASE DIFFERENCE = 0° ± 2° (degrees)

13-18. INPUT SCH ADJUSTMENT

(W4 DEC & CTCM)

TEST POINT	MODE	TAPE USED	M.EQ.	INPUT SIGNAL	ADJUSTMENT
TP401 TP402	E-E (EJECT)	- - - - -	SCH METER OSCILLOSCOPE	LINE IN COMPOSITE SIGNAL (SCH 0°)	VR401 (SCH -)
Step 1. CONNECTION METHOD			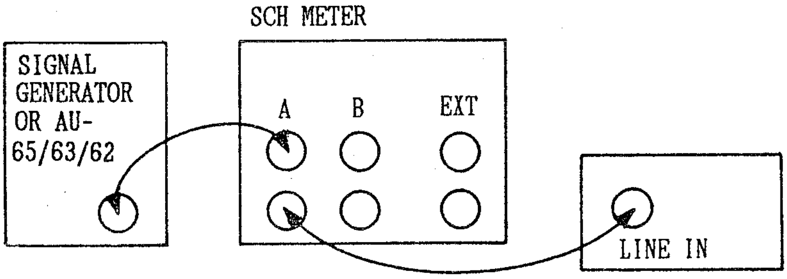 SCH METER SIGNAL GENERATOR OR AU-65/63/62 A B EXT LINE IN		
Step 2. 1. SCH METER : SCH MODE 2. Adjust SIGNAL GEN or another MII VTR so that the SCH phase becomes ± 0° . 3. Connect the oscilloscope to TP401 and TP402. 4. Adjust VR401 so that the (A) equal (B) as shown in figure.			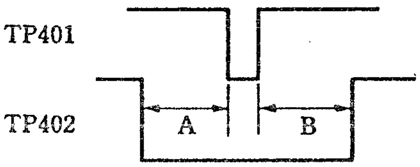 TP401 TP402 A B A = B ± 0.5 msec		

W4 (DEC & CTCM) BLOCK DIAGRAM (1/4)

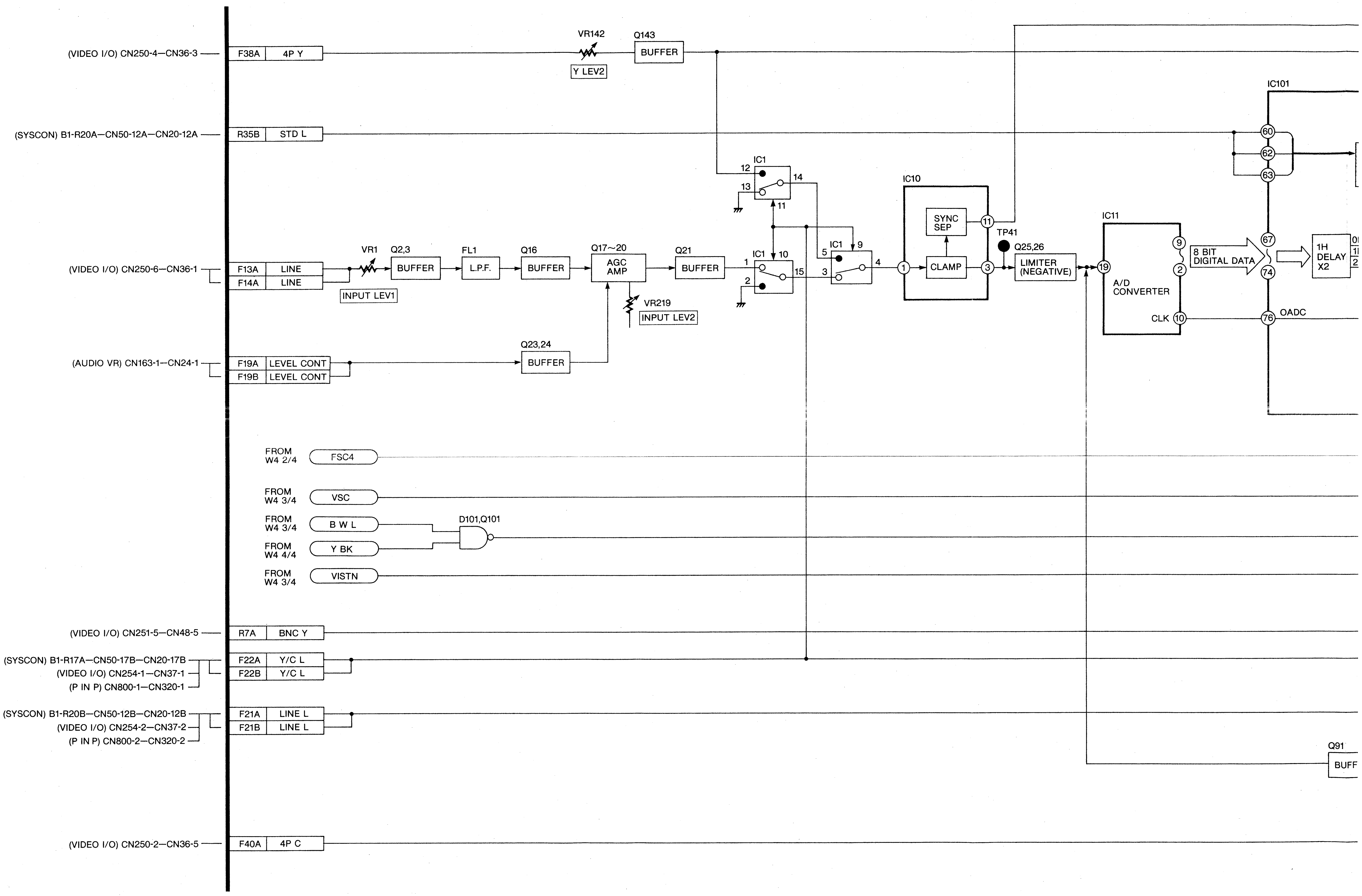
(VIDEO I/O) CN250-4—CN36-3
F38A
4P Y
VR142
Y LEV2
Q143
BUFFER
(SYSCON) B1-R20A—CN50-12A—CN20-12A
R35B
STD L
IC101
60
62
63
IC1
12
13
14
11
IC10
SYNC SEP
CLAMP
1
3
11
TP41
Q25,26
LIMITER (NEGATIVE)
IC11
19
9
2
A/D CONVERTER
CLK
10
8 BIT DIGITAL DATA
67
74
76
OADC
1H DELAY X2
(VIDEO I/O) CN250-6—CN36-1
F13A
LINE
F14A
LINE
VR1
INPUT LEV1
Q2,3
BUFFER
FL1
L.P.F.
Q16
BUFFER
Q17~20
AGC AMP
VR219
INPUT LEV2
Q21
BUFFER
IC1
1
2
10
15
IC1
5
3
9
4
(AUDIO VR) CN163-1—CN24-1
F19A
LEVEL CONT
F19B
LEVEL CONT
Q23,24
BUFFER
FROM W4 2/4
FSC4
FROM W4 3/4
VSC
FROM W4 3/4
B W L
FROM W4 4/4
Y BK
D101,Q101
FROM W4 3/4
VISTN
(VIDEO I/O) CN251-5—CN48-5
R7A
BNC Y
(SYSCON) B1-R17A—CN50-17B—CN20-17B
(VIDEO I/O) CN254-1—CN37-1
(P IN P) CN800-1—CN320-1
F22A
Y/C L
F22B
Y/C L
(SYSCON) B1-R20B—CN50-12B—CN20-12B
(VIDEO I/O) CN254-2—CN37-2
(P IN P) CN800-2—CN320-2
F21A
LINE L
F21B
LINE L
Q91
BUFF
(VIDEO I/O) CN250-2—CN36-5
F40A
4P C

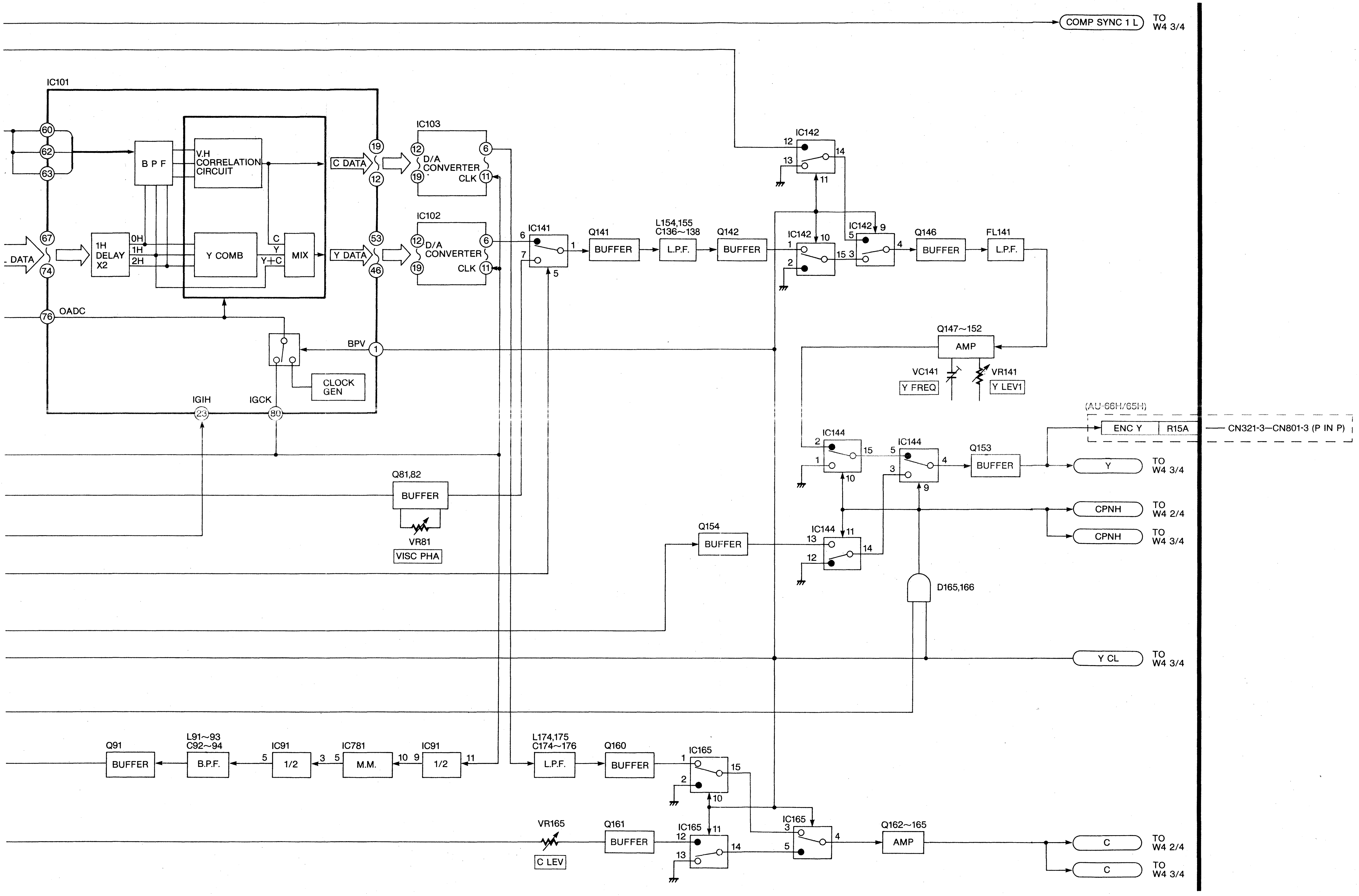
COMP SYNC 1 L
TO W4 3/4
IC101
60
62
63
67
74
76
DATA
B P F
V.H CORRELATION CIRCUIT
1H DELAY X2
0H
1H
2H
Y COMB
C
Y
Y+C
MIX
OADC
BPV
1
CLOCK GEN
IGIH
IGCK
23
80
19
12
53
46
C DATA
Y DATA
IC103
D/A CONVERTER
CLK
IC102
D/A CONVERTER
CLK
12
19
6
11
IC141
6
7
1
5
Q141
BUFFER
L154,155
C136~138
L.P.F.
Q142
BUFFER
IC142
12
13
14
11
IC142
1
2
10
15
IC142
5
3
9
4
Q146
BUFFER
FL141
L.P.F.
Q147~152
AMP
VC141
Y FREQ
VR141
Y LEV1
(AU-66H/65H)
ENC Y
R15A
CN321-3—CN801-3 (P IN P)
IC144
2
1
15
10
IC144
5
3
4
9
Q153
BUFFER
Y
TO W4 3/4
CPNH
TO W4 2/4
CPNH
TO W4 3/4
Q81,82
BUFFER
VR81
VISC PHA
Q154
BUFFER
IC144
13
12
11
14
D165,166
Y CL
TO W4 3/4
Q91
BUFFER
L91~93
C92~94
B.P.F.
IC91
1/2
5
3
IC781
M.M.
5
10
IC91
1/2
9
11
L174,175
C174~176
L.P.F.
Q160
BUFFER
IC165
1
2
15
10
VR165
C LEV
Q161
BUFFER
IC165
12
13
11
14
IC165
3
5
4
Q162~165
AMP
C
TO W4 2/4
C
TO W4 3/4

W4 (DEC & CTCM) BLOCK DIAGRAM (2/4)

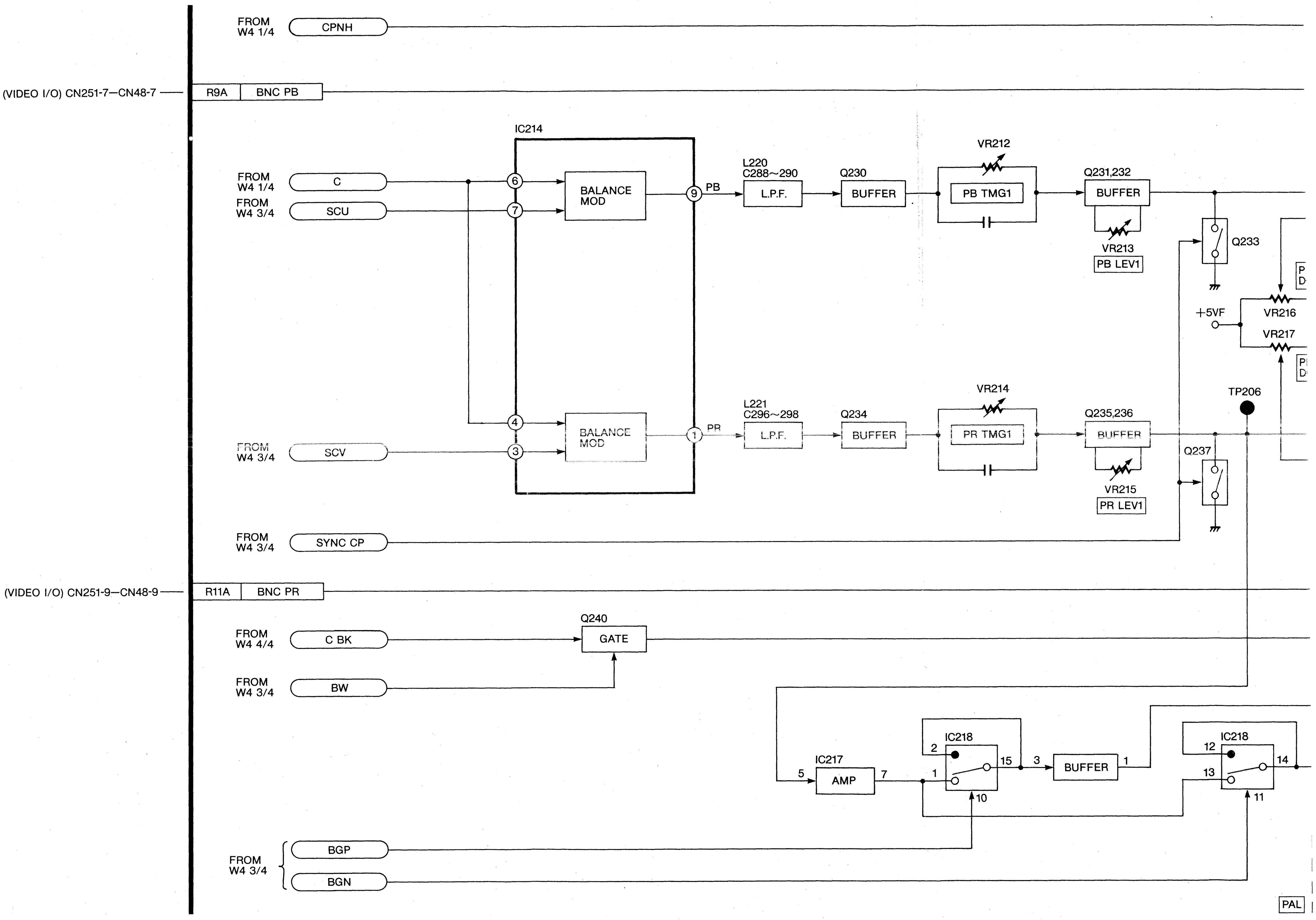
FROM W4 1/4
CPNH
(VIDEO I/O) CN251-7—CN48-7
R9A
BNC PB
IC214
FROM W4 1/4
C
FROM W4 3/4
SCU
6
7
BALANCE MOD
9
PB
L220
C288~290
L.P.F.
Q230
BUFFER
VR212
PB TMG1
Q231,232
BUFFER
VR213
PB LEV1
Q233
+5VF
VR216
VR217
TP206
4
3
BALANCE MOD
1
PR
L221
C296~298
L.P.F.
Q234
BUFFER
VR214
PR TMG1
Q235,236
BUFFER
VR215
PR LEV1
Q237
FROM W4 3/4
SCV
FROM W4 3/4
SYNC CP
(VIDEO I/O) CN251-9—CN48-9
R11A
BNC PR
Q240
FROM W4 4/4
C BK
GATE
FROM W4 3/4
BW
IC217
5
AMP
7
IC218
2
1
15
10
3
BUFFER
1
IC218
12
13
14
11
FROM W4 3/4
BGP
BGN
PAL

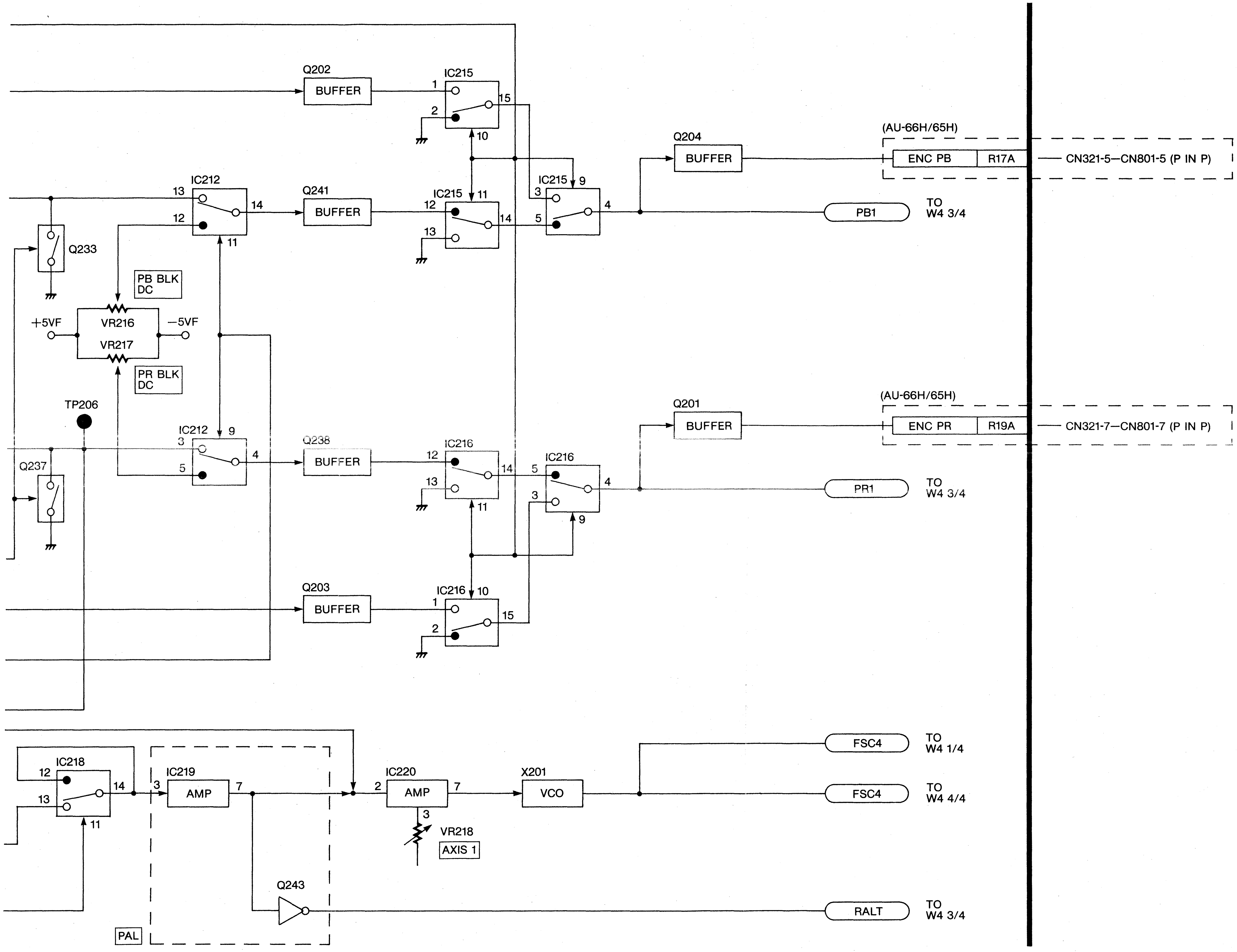
Q202
BUFFER
IC215
1
2
15
10
(AU-66H/65H)
Q204
BUFFER
ENC PB
R17A
CN321-5—CN801-5 (P IN P)
IC212
13
12
14
11
Q241
BUFFER
IC215
12
11
14
13
IC215
9
3
5
4
PB1
TO
W4 3/4
Q233
PB BLK
DC
+5VF
VR216
VR217
−5VF
PR BLK
DC
TP206
IC212
3
9
5
4
Q238
BUFFER
IC216
12
13
14
11
IC216
5
3
4
9
Q237
(AU-66H/65H)
Q201
BUFFER
ENC PR
R19A
CN321-7—CN801-7 (P IN P)
PR1
TO
W4 3/4
Q203
BUFFER
IC216
10
1
2
15
IC218
12
13
14
11
IC219
3
AMP
7
IC220
2
AMP
7
3
VR218
AXIS 1
X201
VCO
FSC4
TO
W4 1/4
FSC4
TO
W4 4/4
Q243
RALT
TO
W4 3/4
PAL

W4 (DEC & CTCM) BLOCK DIAGRAM (3/4)

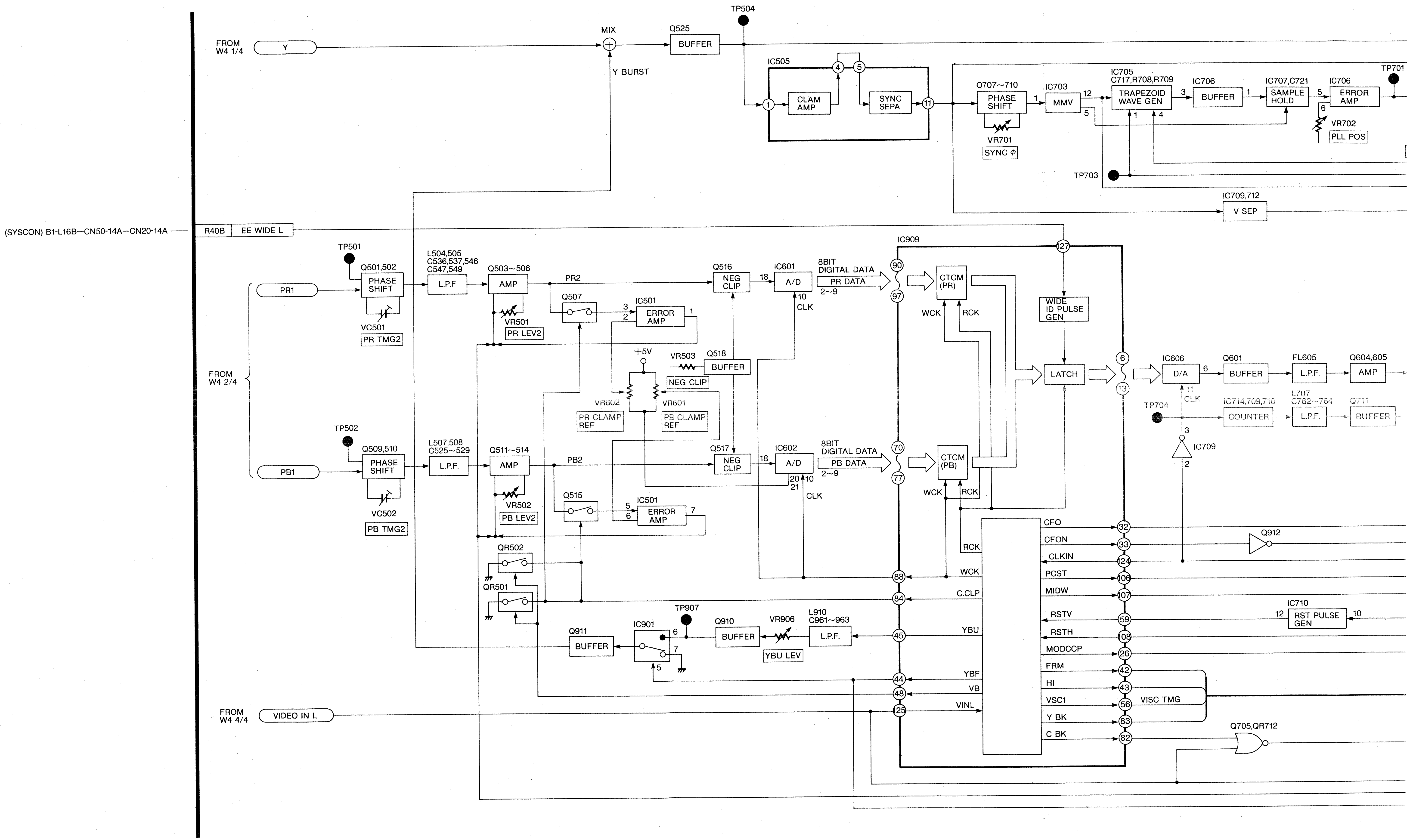

FROM W4 1/4
Y
MIX
Y BURST
Q525
BUFFER
TP504
IC505
CLAM AMP
SYNC SEPA
Q707~710
PHASE SHIFT
VR701
SYNC φ
IC703
MMV
IC705
C717,R708,R709
TRAPEZOID WAVE GEN
IC706
BUFFER
IC707,C721
SAMPLE HOLD
IC706
ERROR AMP
TP701
VR702
PLL POS
TP703
IC709,712
V SEP
(SYSCON) B1-L16B—CN50-14A—CN20-14A
R40B
EE WIDE L
TP501
Q501,502
PHASE SHIFT
VC501
PR TMG2
FROM W4 2/4
PR1
L504,505
C536,537,546
C547,549
L.P.F.
Q503~506
AMP
VR501
PR LEV2
PR2
Q507
IC501
ERROR AMP
Q516
NEG CLIP
IC601
A/D
CLK
8BIT DIGITAL DATA
PR DATA
2~9
IC909
CTCM (PR)
WCK
RCK
WIDE ID PULSE GEN
LATCH
+5V
VR503
Q518
BUFFER
NEG CLIP
VR602
VR601
PR CLAMP REF
PB CLAMP REF
IC606
D/A
CLK
Q601
BUFFER
FL605
L.P.F.
Q604,605
AMP
TP704
IC714,709,710
COUNTER
L707
C762~764
L.P.F.
Q711
BUFFER
IC709
TP502
Q509,510
PHASE SHIFT
VC502
PB TMG2
PB1
L507,508
C525~529
L.P.F.
Q511~514
AMP
VR502
PB LEV2
PB2
Q515
IC501
ERROR AMP
Q517
NEG CLIP
IC602
A/D
CLK
8BIT DIGITAL DATA
PB DATA
2~9
CTCM (PB)
WCK
RCK
QR502
QR501
CFO
CFON
CLKIN
PCST
MIDW
RSTV
RSTH
MODCCP
FRM
HI
VSC1
Y BK
C BK
Q912
RCK
WCK
C.CLP
YBU
YBF
VB
VINL
IC710
RST PULSE GEN
VISC TMG
Q705,QR712
TP907
Q911
BUFFER
IC901
Q910
BUFFER
VR906
YBU LEV
L910
C961~963
L.P.F.
FROM W4 4/4
VIDEO IN L

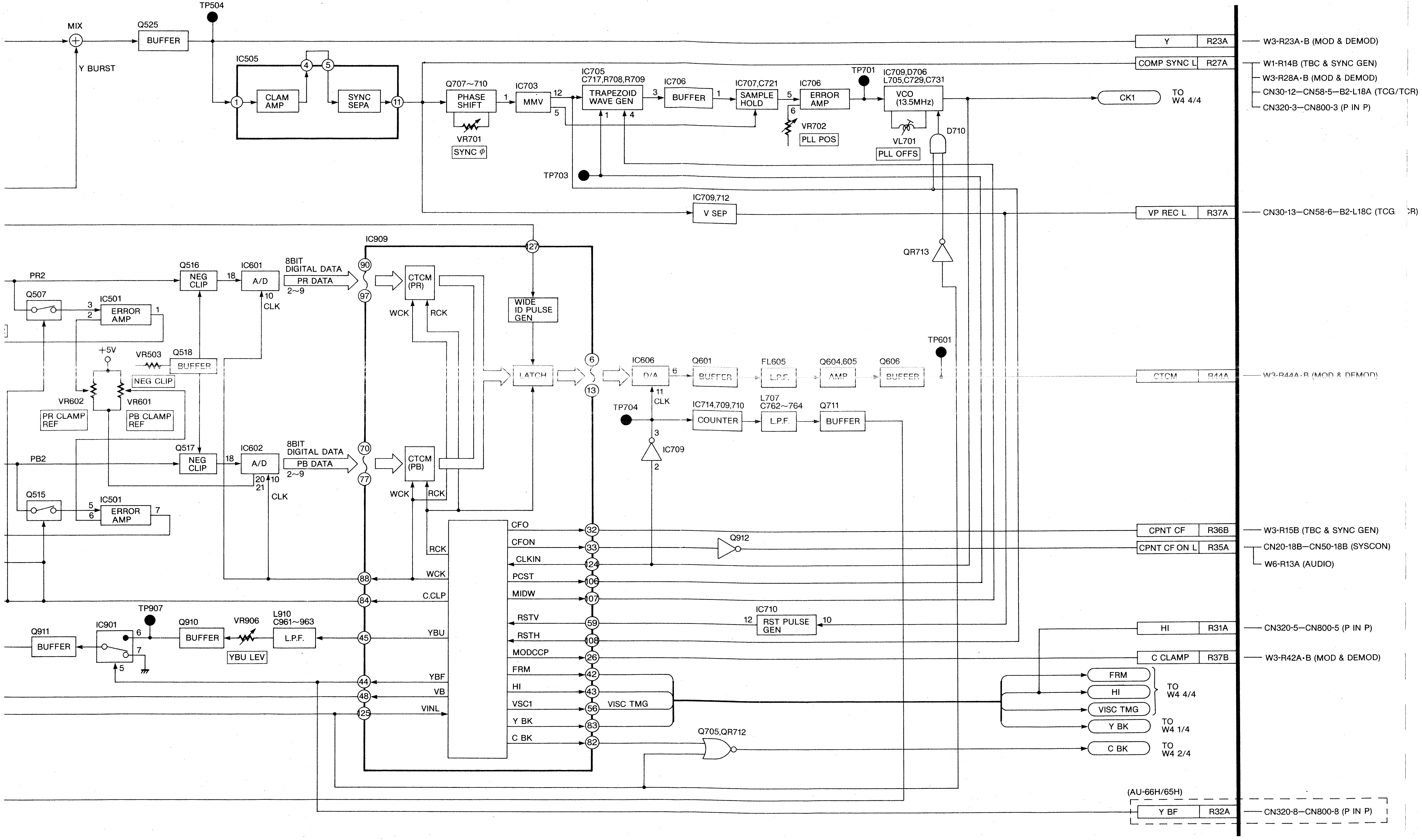
TP504
MIX
Q525
BUFFER
Y BURST
IC505
CLAM AMP
SYNC SEPA
Q707~710
PHASE SHIFT
VR701
SYNC φ
IC703
MMV
IC705
C717,R708,R709
TRAPEZOID WAVE GEN
IC706
BUFFER
IC707,C721
SAMPLE HOLD
IC706
ERROR AMP
VR702
PLL POS
TP701
IC709,D706
L705,C729,C731
VCO (13.5MHz)
VL701
PLL OFFS
D710
CK1
TO W4 4/4
TP703
IC709,712
V SEP
QR713
IC909
8BIT DIGITAL DATA
PR DATA
2~9
PR2
Q516
NEG CLIP
IC601
A/D
CLK
Q507
IC501
ERROR AMP
CTCM (PR)
WCK
RCK
WIDE ID PULSE GEN
+5V
VR503
Q518
BUFFER
NEG CLIP
VR602
VR601
PR CLAMP REF
PB CLAMP REF
LATCH
IC606
D/A
CLK
Q601
BUFFER
FL605
L.P.F.
Q604,605
AMP
Q606
BUFFER
TP601
TP704
IC714,709,710
COUNTER
L707
C762~764
L.P.F.
Q711
BUFFER
IC709
PB2
Q517
NEG CLIP
IC602
A/D
8BIT DIGITAL DATA
PB DATA
2~9
CTCM (PB)
Q515
IC501
ERROR AMP
CFO
CFON
CLKIN
PCST
MIDW
RSTV
RSTH
MODCCP
FRM
HI
VSC1
Y BK
C BK
RCK
WCK
C.CLP
YBU
YBF
VB
VINL
VISC TMG
Q912
IC710
RST PULSE GEN
TP907
Q911
BUFFER
IC901
Q910
BUFFER
VR906
YBU LEV
L910
C961~963
L.P.F.
Q705,QR712
Y | R23A
W3-R23A·B (MOD & DEMOD)
COMP SYNC L | R27A
W1-R14B (TBC & SYNC GEN)
W3-R28A·B (MOD & DEMOD)
CN30-12—CN58-5—B2-L18A (TCG/TCR)
CN320-3—CN800-3 (P IN P)
VP REC L | R37A
CN30-13—CN58-6—B2-L18C (TCG/TCR)
CTCM | R44A
W3-R44A·B (MOD & DEMOD)
CPNT CF | R36B
W3-R15B (TBC & SYNC GEN)
CPNT CF ON L | R35A
CN20-18B—CN50-18B (SYSCON)
W6-R13A (AUDIO)
HI | R31A
CN320-5—CN800-5 (P IN P)
C CLAMP | R37B
W3-R42A·B (MOD & DEMOD)
FRM
HI
VISC TMG
TO W4 4/4
Y BK
TO W4 1/4
C BK
TO W4 2/4
(AU-66H/65H)
Y BF | R32A
CN320-8—CN800-8 (P IN P)

W4 (DEC & CTCM) BLOCK DIAGRAM (4/4)

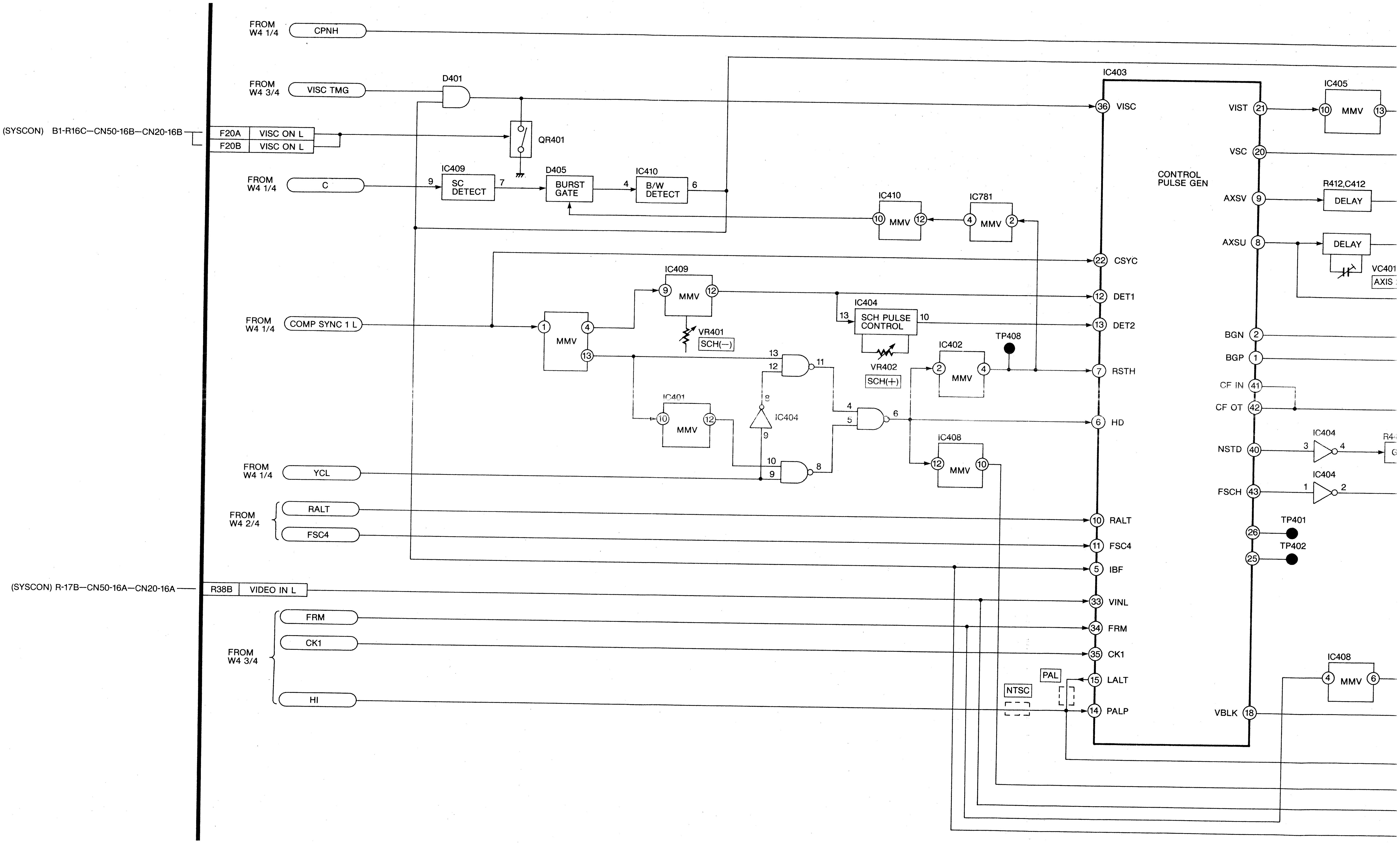

FROM W4 1/4
CPNH
FROM W4 3/4
VISC TMG
D401
(SYSCON) B1-R16C—CN50-16B—CN20-16B
F20A
VISC ON L
F20B
VISC ON L
QR401
FROM W4 1/4
C
IC409
SC DETECT
9
7
D405
BURST GATE
4
IC410
B/W DETECT
6
IC410
MMV
10
12
IC781
MMV
4
2
IC403
36 VISC
22 CSYC
12 DET1
13 DET2
7 RSTH
6 HD
10 RALT
11 FSC4
5 IBF
33 VINL
34 FRM
35 CK1
15 LALT
14 PALP
CONTROL PULSE GEN
VIST 21
VSC 20
AXSV 9
AXSU 8
BGN 2
BGP 1
CF IN 41
CF OT 42
NSTD 40
FSCH 43
26
25
VBLK 18
IC405
10 MMV 13
R412,C412
DELAY
DELAY
VC401
AXIS
IC409
9 MMV 12
VR401
SCH(−)
IC404
13
SCH PULSE CONTROL
10
VR402
SCH(+)
TP408
IC402
2 MMV 4
FROM W4 1/4
COMP SYNC 1 L
1 MMV 4
13
13
12
11
IC401
10 MMV 12
8
IC404
9
4
5
6
IC408
12 MMV 10
10
9
8
FROM W4 1/4
YCL
FROM W4 2/4
RALT
FSC4
IC404
3
4
IC404
1
2
R4
TP401
TP402
(SYSCON) R-17B—CN50-16A—CN20-16A
R38B
VIDEO IN L
FROM W4 3/4
FRM
CK1
HI
PAL
NTSC
IC408
4 MMV 6

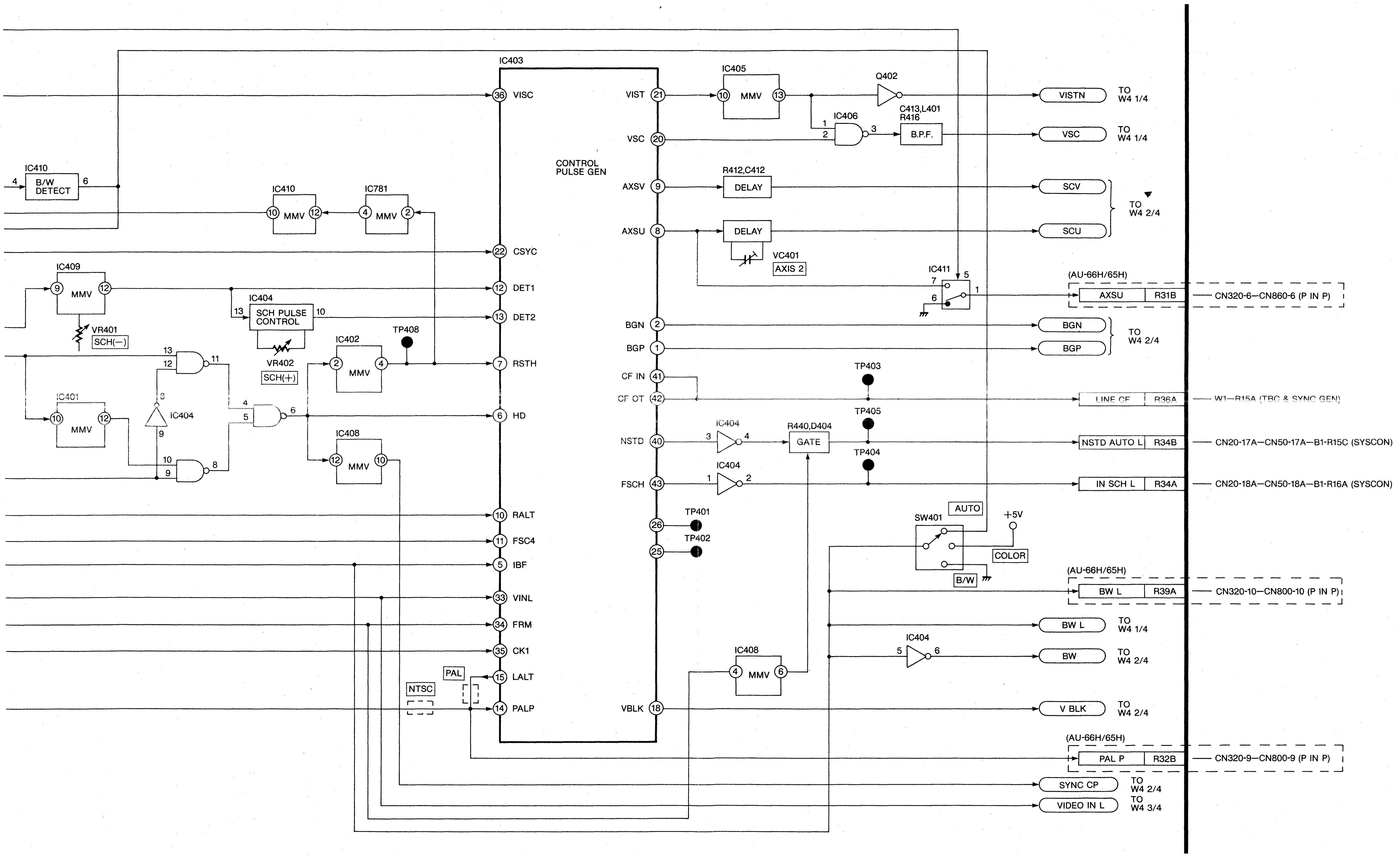
IC403
VISC
CSYC
DET1
DET2
RSTH
HD
RALT
FSC4
IBF
VINL
FRM
CK1
LALT
PALP
CONTROL
PULSE GEN
VIST
VSC
AXSV
AXSU
BGN
BGP
CF IN
CF OT
NSTD
FSCH
VBLK
IC405
MMV
Q402
IC406
C413,L401
R416
B.P.F.
R412,C412
DELAY
DELAY
VC401
AXIS 2
VISTN
TO W4 1/4
VSC
TO W4 1/4
SCV
SCU
TO W4 2/4
IC411
(AU-66H/65H)
AXSU
R31B
CN320-6—CN860-6 (P IN P)
BGN
BGP
TO W4 2/4
TP403
LINE CF
R36A
W1—R15A (TBC & SYNC GEN)
TP405
IC404
R440,D404
GATE
NSTD AUTO L
R34B
CN20-17A—CN50-17A—B1-R15C (SYSCON)
TP404
IC404
IN SCH L
R34A
CN20-18A—CN50-18A—B1-R16A (SYSCON)
TP401
TP402
SW401
AUTO
+5V
COLOR
B/W
(AU-66H/65H)
BW L
R39A
CN320-10—CN800-10 (P IN P)
BW L
TO W4 1/4
IC404
BW
TO W4 2/4
IC408
MMV
V BLK
TO W4 2/4
(AU-66H/65H)
PAL P
R32B
CN320-9—CN800-9 (P IN P)
SYNC CP
TO W4 2/4
VIDEO IN L
TO W4 3/4
IC410
B/W
DETECT
IC410
MMV
IC781
MMV
IC409
MMV
VR401
SCH(−)
IC404
SCH PULSE
CONTROL
VR402
SCH(+)
IC402
MMV
TP408
IC401
MMV
IC404
IC408
MMV
PAL
NTSC

W4 (DEC & CTCM) SCHEMATIC DIAGRAM (1/5)

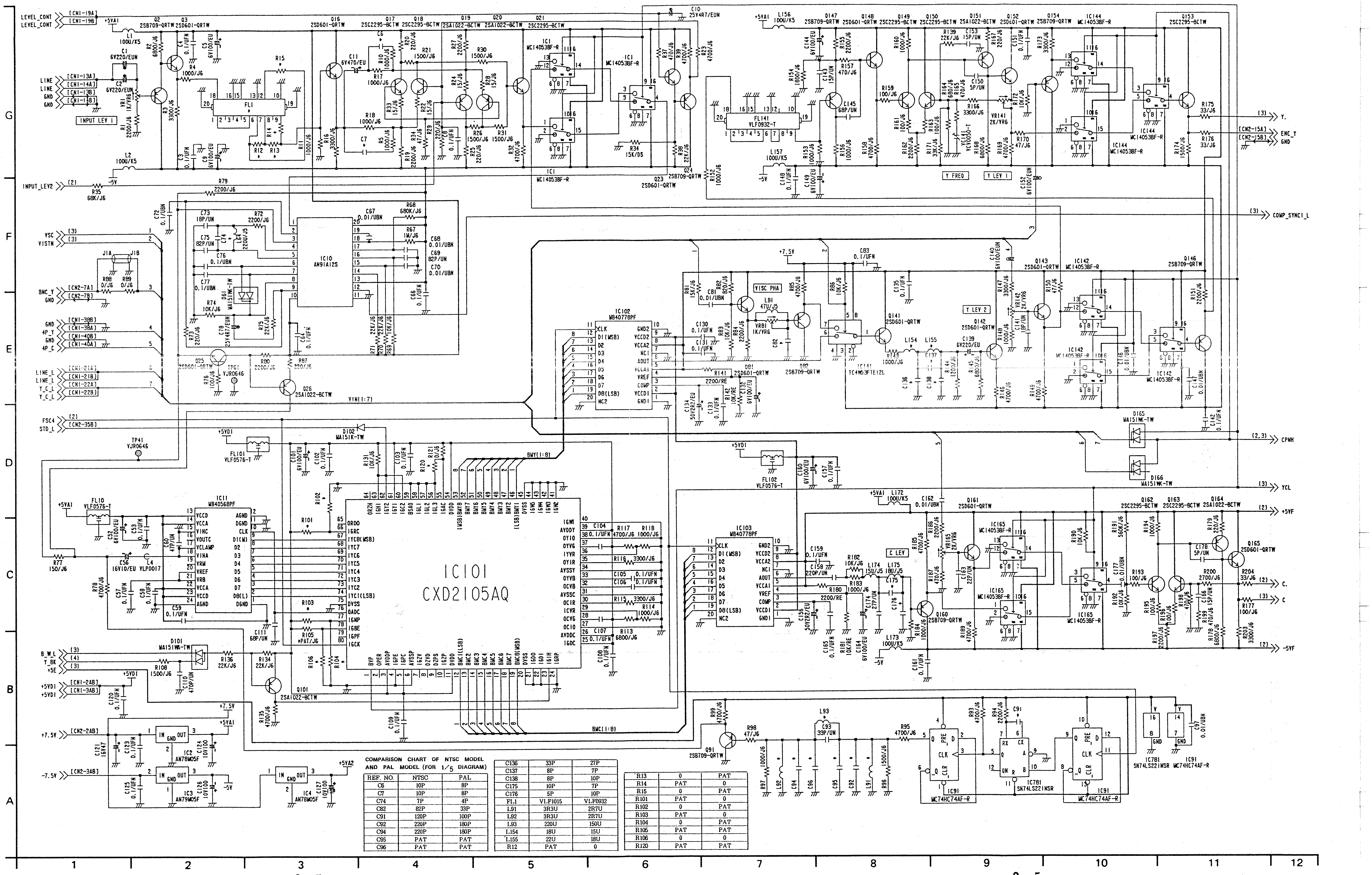
LEVEL_CONT
LEVEL_CONT
[CN1-19A]
[CN1-19B]
LINE
LINE
GND
GND
[CN1-13A]
[CN1-14A]
[CN1-13B]
[CN1-14B]
INPUT LEV 1
INPUT_LEV2
YSC
YISTN
BNC_Y
GND
[CN2-7A]
[CN2-7B]
J1A
J1B
GND
4P_Y
GND
4P_C
[CN1-30B]
[CN1-38A]
[CN1-40B]
[CN1-40A]
LINE_L
LINE_L
Y_C_L
Y_C_L
[CN1-21A]
[CN1-21B]
[CN1-22A]
[CN1-22B]
FSC4
STD_L
[CN2-35B]
TP41
VJR0646
+5VA1
+5VD1
B_W_L
Y_BK
+5E
+5VD1
+5VD1
[CN1-2AB]
[CN1-3AB]
+7.5V
-7.5V
[CN2-2AB]
[CN2-3AB]
FL1
FL141
VLF0932-T
IC1
MC14053BF-R
IC10
AN91A12S
IC11
MB4056BPF
IC101
CXD2105AQ
IC102
MB40776PF
IC103
MB40778PF
IC141
TC4H63FTE12L
IC142
MC14053BF-R
IC144
MC14053BF-R
IC165
MC14053BF-R
IC2
AN78M05F
IC3
AN79M05F
IC4
AN78M05F
IC91
MC74HC74AF-R
IC781
SN74LS221NSR
FL101
VLF0576-T
FL102
VLF0576-T
FL10
VLF0576-T
D101
MA151WA-TW
D102
MA151K-TW
D165
MA151WK-TW
D166
MA151WK-TW
Q2
2SB709-QRTW
Q3
2SD601-QRTW
Q16
2SD601-QRTW
Q17
2SC2295-BCTW
Q18
2SC2295-BCTW
Q19
2SA1022-BCTW
Q20
2SA1022-BCTW
Q21
2SC2295-BCTW
Q23
2SD601-QRTW
Q24
2SB709-QRTW
Q25
2SD601-QRTW
Q26
2SA1022-BCTW
Q81
2SD601-QRTW
Q82
2SB709-QRTW
Q91
2SB709-QRTW
Q101
2SA1022-BCTW
Q141
2SD601-QRTW
Q142
2SD601-QRTW
Q143
2SD601-QRTW
Q146
2SB709-QRTW
Q147
2SB709-QRTW
Q148
2SD601-QRTW
Q149
2SC2295-BCTW
Q150
2SC2295-BCTW
Q151
2SA1022-BCTW
Q152
2SD601-QRTW
Q153
2SC2295-BCTW
Q154
2SB709-QRTW
Q160
2SB709-QRTW
Q161
2SD601-QRTW
Q162
2SC2295-BCTW
Q163
2SC2295-BCTW
Q164
2SA1022-BCTW
Q165
2SD601-QRTW
Y FREQ
Y LEV 1
Y LEV 2
YISC PHA
C LEV
VIN(1:7)
BMY(1:8)
BMC(1:8)
(3) Y
[CN2-15A] ENC_Y
[CN2-15B] GND
(3) COMP_SYNC1_L
(2,3) CPWH
(3) YCL
(2) +5VF
(2) C.
(3) C
(2) -5VF
A
B
C
D
E
F
G
1
2
3
4
5
6
7
8
9
10
11
12

COMPARISON CHART OF NTSC MODEL AND PAL MODEL (FOR 1/5 DIAGRAM)

REF. NO.	NTSC	PAL
C6	10P	8P
C7	10P	8P
C74	7P	4P
C82	82P	33P
C91	120P	100P
C92	220P	180P
C94	220P	180P
C95	PAT	PAT
C96	PAT	PAT
C136	33P	27P
C137	8P	7P
C138	8P	10P
C175	10P	7P
C176	5P	10P
FL1	VLF1015	VLF0932
L91	3R3U	2R7U
L92	3R3U	2R7U
L93	220U	150U
L154	18U	15U
L155	22U	18U
R12	PAT	0
R13	0	PAT
R14	PAT	0
R15	0	PAT
R101	PAT	0
R102	0	PAT
R103	PAT	0
R104	0	PAT
R105	PAT	PAT
R106	0	0
R120	PAT	PAT

W4 (DEC & CTCM) SCHEMATIC DIAGRAM (2/5)

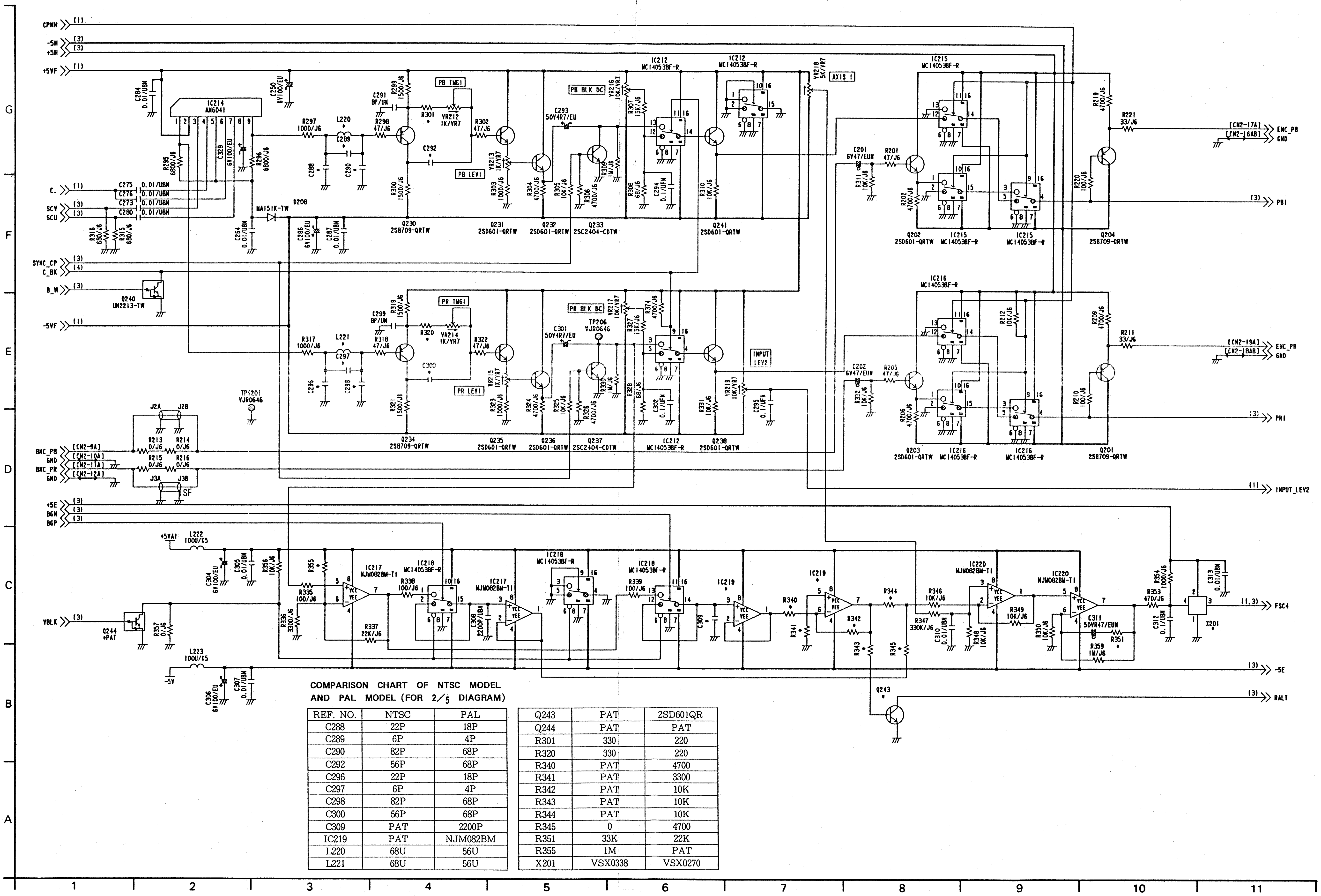

CPNH (1)
-5H (3)
+5H (3)
+5VF (1)
C. (1)
SCV (3)
SCU (3)
SYNC_CP (3)
C_BK (4)
B_W (3)
-5VF (1)
BNC_PB [CN2-9A]
GND [CN2-10A]
BNC_PR [CN2-11A]
GND [CN2-12A]
+5E (3)
BGN (3)
BGP (3)
YBLK (3)
+5VA1
-5V
IC214 AN6041
C284 0.01/UBN
C250 6V100/EU
C275 0.01/UBN
C276 0.01/UBN
C273 0.01/UBN
C280 0.01/UBN
R295 6800/J6
R296 6800/J6
C328 6V100/EU
R316 680/J6
R315 680/J6
C264 0.01/UBN
D208 MA151K-TW
C286 6V100/EU
C287 0.01/UBN
Q240 UN2213-TW
R297 1000/J6
L220
C289
C288
C290
R317 1000/J6
L221
C297
C296
C298
PB TMG1
PB LEV1
PB BLK DC
PR TMG1
PR LEV1
PR BLK DC
AXIS 1
INPUT LEV2
TP6201 VJR0646
TP206 VJR0646
Q230 2SB709-QRTW
Q231 2SD601-QRTW
Q232 2SD601-QRTW
Q233 2SC2404-CDTW
Q241 2SD601-QRTW
Q234 2SB709-QRTW
Q235 2SD601-QRTW
Q236 2SD601-QRTW
Q237 2SC2404-CDTW
Q238 2SD601-QRTW
IC212 MC14053BF-R
IC215 MC14053BF-R
IC216 MC14053BF-R
Q202 2SD601-QRTW
Q203 2SD601-QRTW
Q204 2SB709-QRTW
Q201 2SB709-QRTW
VR218 5K/VR7
VR212 1K/VR7
VR214 1K/VR7
VR213 1K/VR7
VR215 1K/VR7
VR216 10K/VR7
VR217 10K/VR7
VR219 10K/VR7
C201 6V47/EUN
C202 6V47/EUN
R201 47/J6
R205 47/J6
R221 33/J6
R211 33/J6
[CN2-17A] ENC_PB
[CN2-16AB] GND
[CN2-19A] ENC_PR
[CN2-18AB] GND
(3) PB1
(3) PR1
(1) INPUT_LEV2
J2A J2B
J3A J3B
SF
R213 0/J6
R214 0/J6
R215 0/J6
R216 0/J6
L222 100U/K5
L223 100U/K5
C304 6V100/EU
C305 0.01/UBN
C306 6V100/EU
C307 0.01/UBN
Q244 PAT
R357 0/J6
IC217 NJM082BM-T1
IC218 MC14053BF-R
IC219
IC220 NJM082BM-T1
Q243
X201
C311 50VR47/EUN
R353 470/J6
R354 1000/J6
C312 0.1/UBN
C313 0.01/UBN
(1,3) FSC4
(3) -5E
(3) RALT
G
F
E
D
C
B
A
1
2
3
4
5
6
7
8
9
10
11

COMPARISON CHART OF NTSC MODEL AND PAL MODEL (FOR 2/5 DIAGRAM)

REF. NO.	NTSC	PAL
C288	22P	18P
C289	6P	4P
C290	82P	68P
C292	56P	68P
C296	22P	18P
C297	6P	4P
C298	82P	68P
C300	56P	68P
C309	PAT	2200P
IC219	PAT	NJM082BM
L220	68U	56U
L221	68U	56U
Q243	PAT	2SD601QR
Q244	PAT	PAT
R301	330	220
R320	330	220
R340	PAT	4700
R341	PAT	3300
R342	PAT	10K
R343	PAT	10K
R344	PAT	10K
R345	0	4700
R351	33K	22K
R355	1M	PAT
X201	VSX0338	VSX0270

W4 (DEC & CTCM) SCHEMATIC DIAGRAM (3/5)

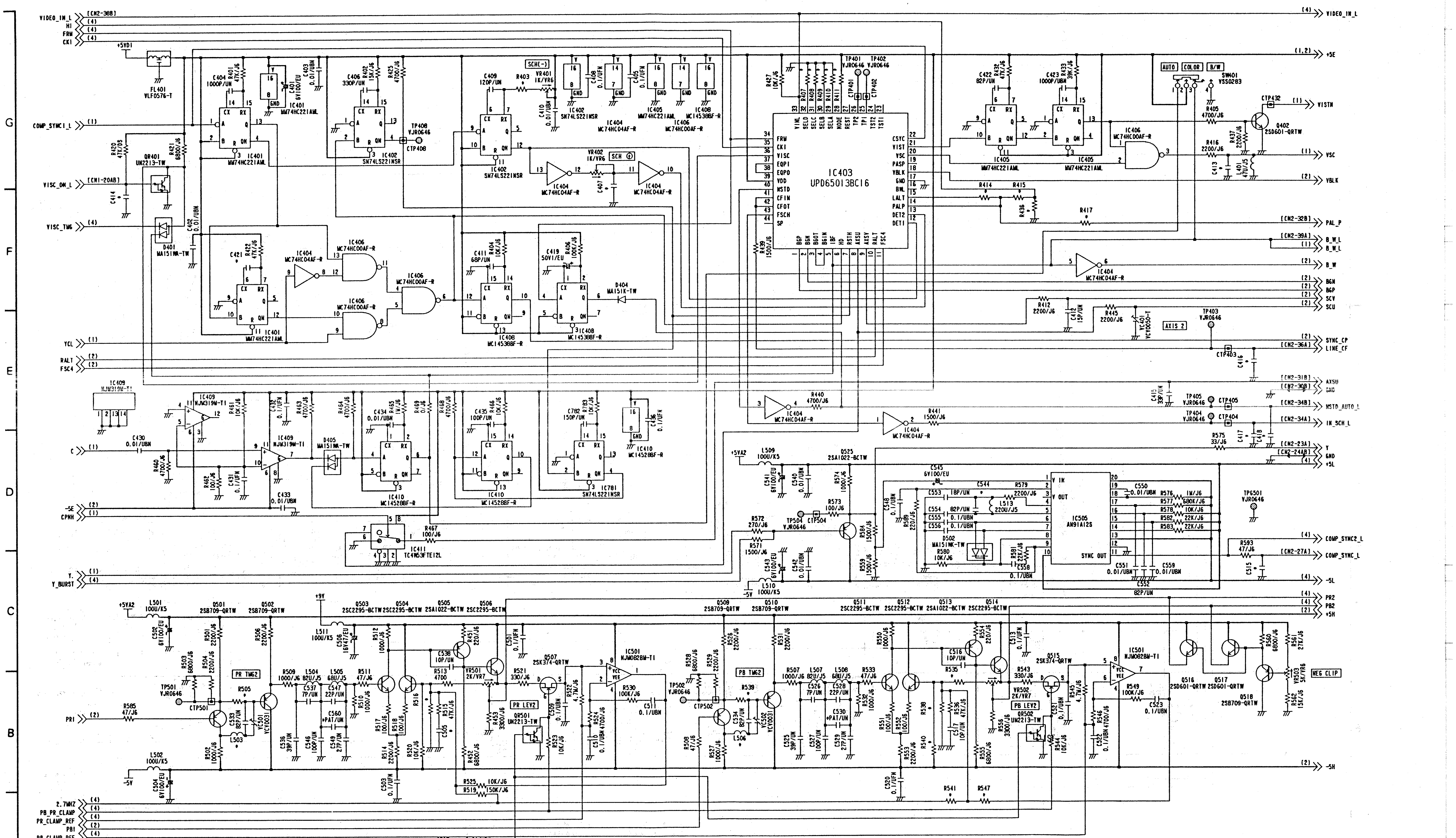

VIDEO_IN_L
HI
FRM
CKI
COMP_SYNC1_L
VISC_ON_L
VISC_TMG
YCL
RALT
FSC4
C
-5E
CPNH
Y
Y_BURST
PRI
2.7MHZ
PB_PR_CLAMP
PR_CLAMP_REF
PBI
PB_CLAMP_REF
VB
+5E
VISTH
VSC
VBLK
PAL_P
B_W_L
B_W
BGN
BGP
SCV
SCU
SYNC_CP
LINE_CF
AXSU
GND
NSTD_AUTO_L
IN_SCH_L
+5L
COMP_SYNC2_L
COMP_SYNC_L
-5L
PR2
PB2
+5H
-5H
NEG CLIP
FL401 VLF0576-T
IC401 MM74HC221AML
IC402 SN74LS221NSR
IC403 UPD65013BC16
IC404 MC74HC04AF-R
IC405 MM74HC221AML
IC406 MC74HC00AF-R
IC408 MC14538BF-R
IC409 NJM319M-T1
IC410 MC14528BF-R
IC411 TC4W53FTE12L
IC505 AN91A12S
IC501 NJM082BM-T1
IC781 SN74LS221NSR
SW401 VSS0283
AUTO
COLOR
B/W
SCH(-)
SCH ⊕
AXIS 2
PR TMG2
PB TMG2
PR LEV2
PB LEV2
Q401 2SD601-QRTW
Q501 2SB709-QRTW
Q502 2SB709-QRTW
Q503 2SC2295-BCTW
Q504 2SC2295-BCTW
Q505 2SA1022-BCTW
Q506 2SC2295-BCTW
Q507 2SK374-QRTW
Q509 2SB709-QRTW
Q510 2SB709-QRTW
Q511 2SC2295-BCTW
Q512 2SC2295-BCTW
Q513 2SA1022-BCTW
Q514 2SC2295-BCTW
Q515 2SK374-QRTW
Q516 2SD601-QRTW
Q517 2SD601-QRTW
Q518 2SB709-QRTW
Q525 2SA1022-BCTW
QR401 UN2213-TW
QR501 UN2213-TW
QR502 UN2213-TW
D401 MA151WA-TW
D404 MA151K-TW
D405 MA151WA-TW
D502 MA151WK-TW
G
F
E
D
C
B
A
1
2
3
4
5
6
7
8
9
10
11
12

COMPARISON CHART OF NTSC MODEL AND PAL MODEL (FOR 3/5 DIAGRAM)

REF. NO.	NTSC	PAL
C407	56P	PAT
C413	22P	7P
C414	PAT	PAT
C416	PAT	PAT
C417	PAT	PAT
C418	PAT	PAT
C421	33P	27P
C505	6P	10P
C515	PAT	PAT
C530	PAT	PAT
C544	22P	8P
C560	PAT	PAT
L503	10U	18U
L506	10U	18U
R403	2200	3300
R407	0	PAT
R408	0	PAT
R409	PAT	PAT
R410	PAT	PAT
R411	PAT	0
R414	PAT	0
R415	0	PAT
R417	PAT	1500
R436	220K	PAT
R505	1000	1000
R516	2200	3300
R535	2200	4700
R538	2200	3300
R539	1000	1000
R540	4700	10K
R541	100K	150K
R547	6800	10K

W4 (DEC & CTCM) SCHEMATIC DIAGRAM (4/5)

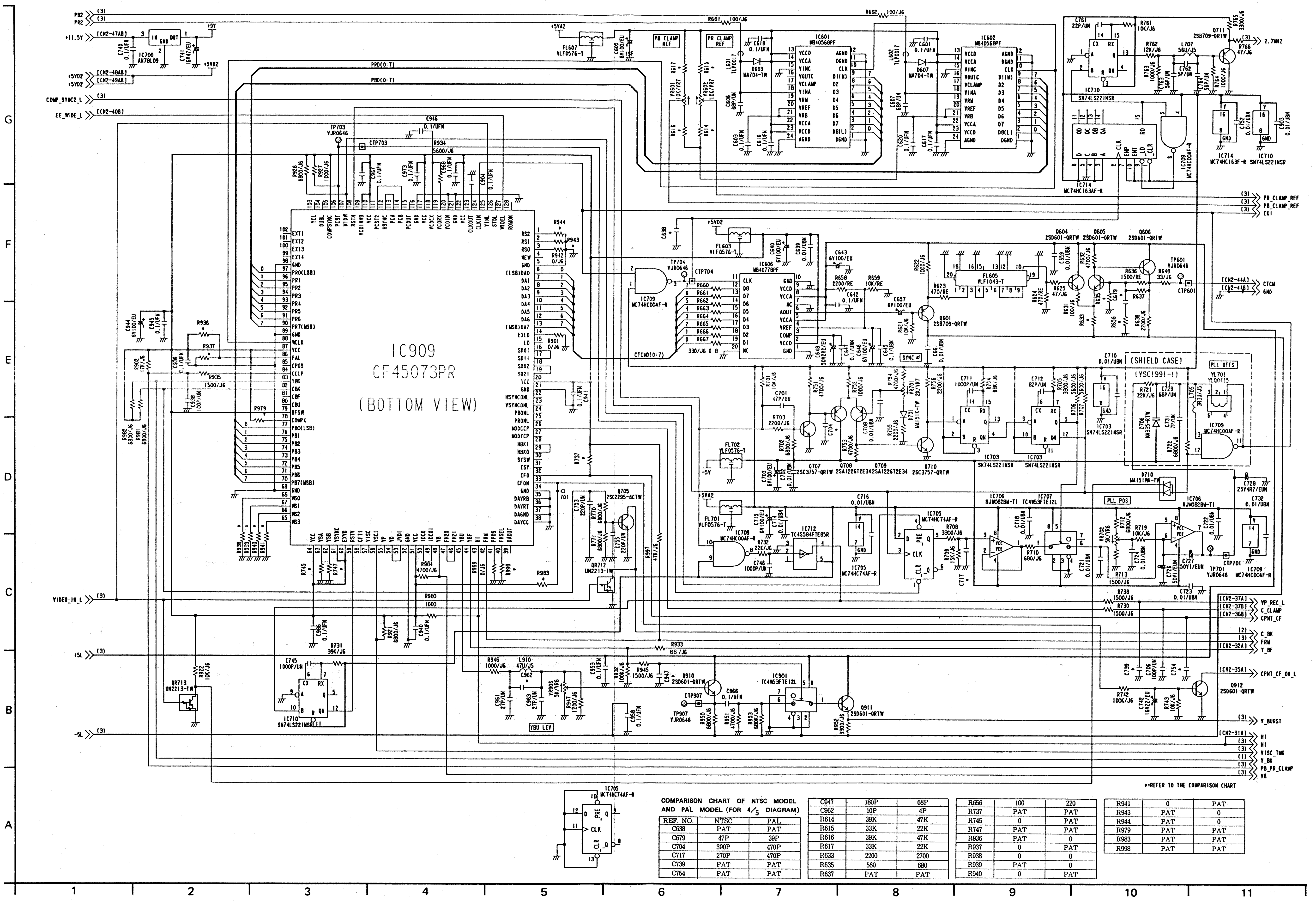
PB2 (3)
PR2 (3)
+11.5V [CN2-47AB]
IC700 AN78L09
+5VD2 [CN2-48AB]
+5VD2 [CN2-49AB]
COMP_SYNC2_L (3)
EE_WIDE_L [CN2-40B]
PRD(0:7)
PBD(0:7)
IC909
CF45073PR
(BOTTOM VIEW)
IC601 MB40568PF
IC602 MB40568PF
IC606 MB40778PF
IC709 MC74HC00AF-R
IC710 SN74LS221NSR
IC714 MC74HC163AF-R
IC703 SN74LS221NSR
IC705 MC74HC74AF-R
IC706 NJM082BM-T1
IC707 TC4W53FTE12L
IC712 TC4S584FTE85R
IC901 TC4W53FTE12L
FL605 YLF1043-T
(SHIELD CASE)
(YSC1991-1)
PLL OFFS
PLL POS
SYNC
YBU LEY
PB CLAMP REF
PR CLAMP REF
(3) 2.7MHZ
(3) PR_CLAMP_REF
(3) PB_CLAMP_REF
(3) CK1
[CN2-44A] CTCM
[CN2-44B] GND
VIDEO_IN_L (3)
+5L (3)
-5L (3)
[CN2-37A] VP_REC_L
[CN2-37B] C_CLAMP
[CN2-36B] CPNT_CF
(2) C_BK
(3) FRM
[CN2-32A] Y_BF
[CN2-35A] CPNT_CF_ON_L
(3) Y_BURST
[CN2-31A] HI
(3) HI
(3) VISC_TMG
(1) Y_BK
(3) PB_PR_CLAMP
(3) YB
G
F
E
D
C
B
A
1
2
3
4
5
6
7
8
9
10
11

*=REFER TO THE COMPARISON CHART

COMPARISON CHART OF NTSC MODEL AND PAL MODEL (FOR 4/5 DIAGRAM)

REF. NO.	NTSC	PAL
C638	PAT	PAT
C679	47P	39P
C704	390P	470P
C717	270P	470P
C739	PAT	PAT
C754	PAT	PAT
C947	180P	68P
C962	10P	4P
R614	39K	47K
R615	33K	22K
R616	39K	47K
R617	33K	22K
R633	2200	2700
R635	560	680
R637	PAT	PAT
R656	100	220
R737	PAT	PAT
R745	0	PAT
R747	PAT	PAT
R936	PAT	0
R937	0	PAT
R938	0	0
R939	PAT	0
R940	0	PAT
R941	0	PAT
R943	PAT	0
R944	PAT	0
R979	PAT	PAT
R983	PAT	PAT
R998	PAT	PAT

W4 (DEC & CTCM) SCHEMATIC DIAGRAM (5/5)

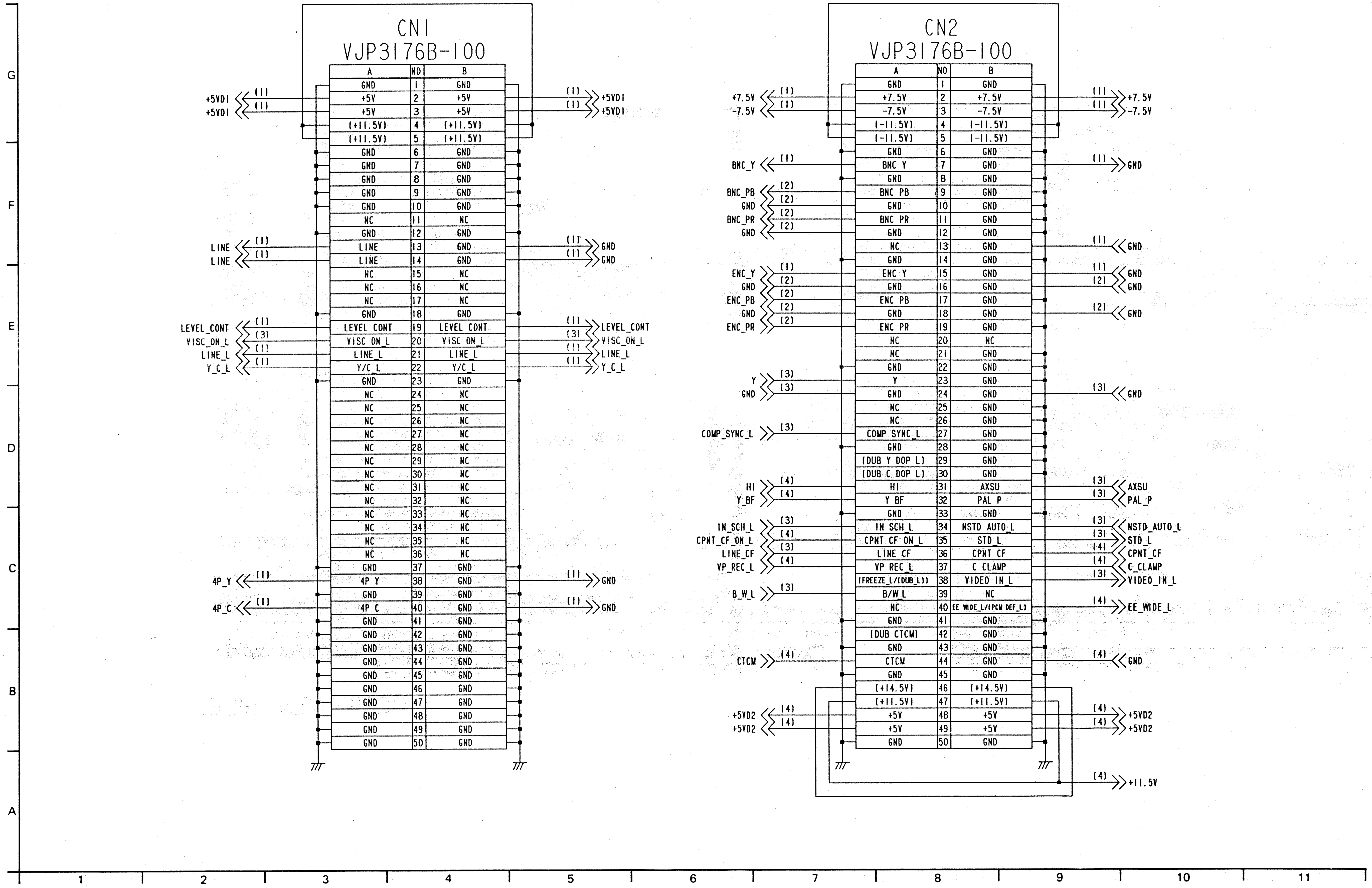
CN1
VJP3176B-100
+5VDI (1)
+5VDI (1)
LINE (1)
LINE (1)
LEVEL_CONT (1)
VISC_ON_L (3)
LINE_L (1)
Y_C_L (1)
4P_Y (1)
4P_C (1)
(1) +5VDI
(1) +5VDI
(1) GND
(1) GND
(1) LEVEL_CONT
(3) VISC_ON_L
(1) LINE_L
(1) Y_C_L
(1) GND
(1) GND
CN2
VJP3176B-100
+7.5V (1)
-7.5V (1)
BNC_Y (1)
BNC_PB (2)
GND (2)
BNC_PR (2)
GND (2)
ENC_Y (1)
GND (2)
ENC_PB (2)
GND (2)
ENC_PR (2)
Y (3)
GND (3)
COMP_SYNC_L (3)
HI (4)
Y_BF (4)
IN_SCH_L (3)
CPNT_CF_ON_L (4)
LINE_CF (3)
VP_REC_L (4)
B_W_L (3)
CTCM (4)
+5VD2 (4)
+5VD2 (4)
(1) +7.5V
(1) -7.5V
(1) GND
(1) GND
(1) GND
(2) GND
(2) GND
(3) GND
(3) AXSU
(3) PAL_P
(3) NSTD_AUTO_L
(3) STD_L
(4) CPNT_CF
(4) C_CLAMP
(3) VIDEO_IN_L
(4) EE_WIDE_L
(4) GND
(4) +5VD2
(4) +5VD2
(4) +11.5V
G
F
E
D
C
B
A
1
2
3
4
5
6
7
8
9
10
11

CN1
VJP3176B-100

A	NO	B
GND	1	GND
+5V	2	+5V
+5V	3	+5V
(+11.5V)	4	(+11.5V)
(+11.5V)	5	(+11.5V)
GND	6	GND
GND	7	GND
GND	8	GND
GND	9	GND
GND	10	GND
NC	11	NC
GND	12	GND
LINE	13	GND
LINE	14	GND
NC	15	NC
NC	16	NC
NC	17	NC
GND	18	GND
LEVEL CONT	19	LEVEL CONT
VISC ON L	20	VISC ON L
LINE L	21	LINE L
Y/C L	22	Y/C L
GND	23	GND
NC	24	NC
NC	25	NC
NC	26	NC
NC	27	NC
NC	28	NC
NC	29	NC
NC	30	NC
NC	31	NC
NC	32	NC
NC	33	NC
NC	34	NC
NC	35	NC
NC	36	NC
GND	37	GND
4P Y	38	GND
GND	39	GND
4P C	40	GND
GND	41	GND
GND	42	GND
GND	43	GND
GND	44	GND
GND	45	GND
GND	46	GND
GND	47	GND
GND	48	GND
GND	49	GND
GND	50	GND

CN2
VJP3176B-100

A	NO	B
GND	1	GND
+7.5V	2	+7.5V
-7.5V	3	-7.5V
(-11.5V)	4	(-11.5V)
(-11.5V)	5	(-11.5V)
GND	6	GND
BNC Y	7	GND
GND	8	GND
BNC PB	9	GND
GND	10	GND
BNC PR	11	GND
GND	12	GND
NC	13	GND
GND	14	GND
ENC Y	15	GND
GND	16	GND
ENC PB	17	GND
GND	18	GND
ENC PR	19	GND
NC	20	NC
NC	21	GND
GND	22	GND
Y	23	GND
GND	24	GND
NC	25	GND
NC	26	GND
COMP SYNC L	27	GND
GND	28	GND
(DUB Y DOP L)	29	GND
(DUB C DOP L)	30	GND
HI	31	AXSU
Y BF	32	PAL P
GND	33	GND
IN SCH L	34	NSTD AUTO L
CPNT CF ON L	35	STD L
LINE CF	36	CPNT CF
VP REC L	37	C CLAMP
(FREEZE_L/(DUB_L))	38	VIDEO IN L
B/W L	39	NC
NC	40	EE WIDE_L/(PCM DEF_L)
GND	41	GND
(DUB CTCM)	42	GND
GND	43	GND
CTCM	44	GND
GND	45	GND
(+14.5V)	46	(+14.5V)
(+11.5V)	47	(+11.5V)
+5V	48	+5V
+5V	49	+5V
GND	50	GND

W4 (DEC&CTCM) P.C.BOARD (VEP83199A) FOR [NTSC]
(VEP83199B) FOR [PAL]

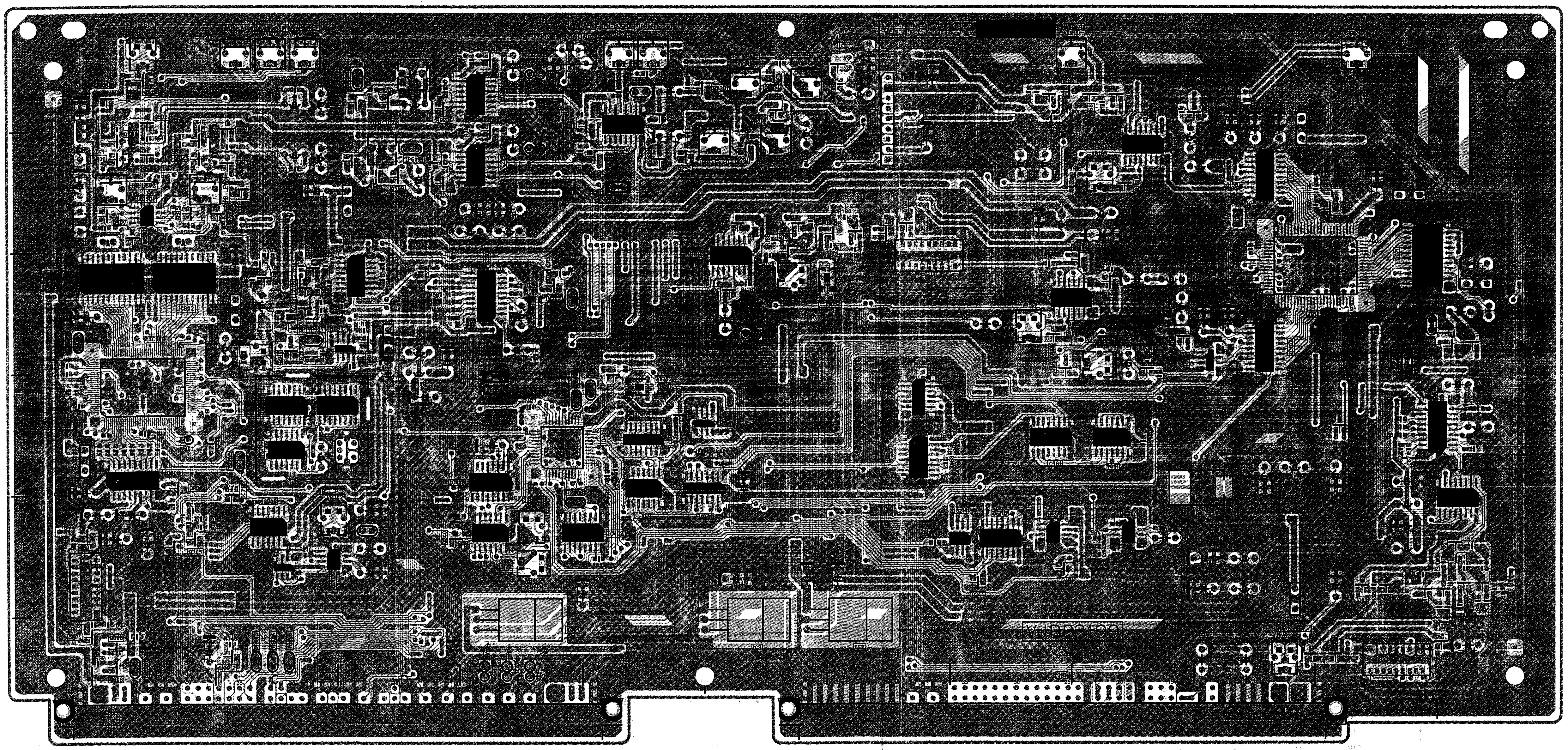

(COMPONENT SIDE)

DECODER & CTCM P.C.BOARD

TRANSISTOR

Q2	K-6
Q3	L-6
Q16	M-6
Q17	L-5
Q18	M-5
Q19	M-5
Q20	M-5
Q21	M-5
Q23	L-5
Q24	L-5
Q25	M-3
Q26	M-3
Q81	I-3
Q82	J-3
Q91	L-4
Q101	L-2
Q141	J-3
Q142	J-3
Q143	I-3
Q146	J-3
Q147	H-2
Q148	H-2
Q149	H-2
Q150	H-2
Q151	G-2
Q152	G-2
Q153	G-2
Q154	G-3
Q160	K-1
Q161	J-2
Q162	J-1
Q163	J-1
Q164	I-1
Q165	I-1
Q201	D-1
Q202	E-1
Q203	E-1
Q204	D-2
Q230	G-1
Q231	G-2
Q232	F-2
Q233	F-2
Q234	H-1
Q235	G-1
Q236	G-1
Q237	F-1
Q238	F-1
Q240	D-5
Q241	F-2
Q243	I-5
Q244	I-5
Q402	F-4
Q501	D-1
Q502	D-1
Q503	B-1
Q504	B-2
Q505	B-2
Q506	B-2
Q507	B-2
Q509	D-2
Q510	D-2
Q511	C-1
Q512	C-2
Q513	B-2
Q514	B-2
Q515	B-2
Q516	B-1
Q517	C-2
Q518	B-1
Q525	E-3
Q601	A-5
Q604	A-6
Q605	B-6
Q606	B-6
Q605	B-5
Q607	C-3
Q608	C-3
Q609	C-3
Q610	C-3
Q611	C-3
Q910	C-3
Q911	D-3
Q912	C-6
QR401	F-4
QR501	B-2
QR502	C-2
QR712	B-5
QR713	B-4

INTEGRATED CIRCUIT

IC1	M-5
IC2	H-6
IC3	G-6
IC4	E-6
IC10	M-4
IC11	L-3
IC91	J-4
IC101	L-3
IC102	K-3
IC103	K-2
IC141	K-3
IC142	J-3
IC144	G-3
IC165	J-2
IC212	F-1
IC214	H-1
IC215	E-2
IC216	E-1
IC217	I-5
IC218	I-5
IC219	I-5
IC220	J-5
IC401	G-5
IC402	F-5
IC403	E-4
IC404	E-5
IC405	F-4
IC406	F-4
IC408	E-4
IC409	H-4
IC410	H-4
IC411	G-4
IC501	B-2
IC505	E-3
IC601	B-3
IC602	B-3
IC606	B-4
IC700	A-2
IC703	D-3
IC705	C-5
IC706	C-5
IC707	C-5
IC709	C-4
IC710	C-4
IC712	C-5
IC714	D-4
IC781	I-4
IC901	D-3
IC909	B-4

TEST POINT

TP41	L-3
TP206	F-1
TP401	E-4
TP402	F-4
TP403	C-6
TP404	C-6
TP405	C-6
TP408	E-5
TP501	D-1
TP502	D-2
TP504	E-3
TP601	B-6
TP701	D-5
TP703	A-3
TP704	C-4
TP907	C-3
TPG1	L-3
TPG201	F-2
TPG501	E-4

ADJUSTMENT

VR1	K-6
VR81	J-3
VR141	G-3
VR142	I-3
VR165	J-2
VR212	G-2
VR213	G-2
VR214	G-1
VR215	G-1
VR216	F-1
VR217	F-1
VR218	J-1
VR219	L-1
VR401	E-5
VR402	E-5
VR501	B-2
VR502	B-2
VR503	B-1
VR601	C-1
VR602	C-1
VR701	C-1
VR702	C-5
VR906	C-3
VC141	H-3
VC401	F-4
VC501	D-1
VC502	D-2

CONNECTOR

CN1	I-6
CN2	C-6

ADDRESS INFORMATION

CHIP PART INFORMATION

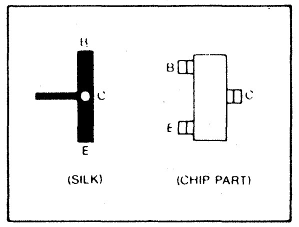
B
C
E
(SILK)
B
C
E
(CHIP PART)

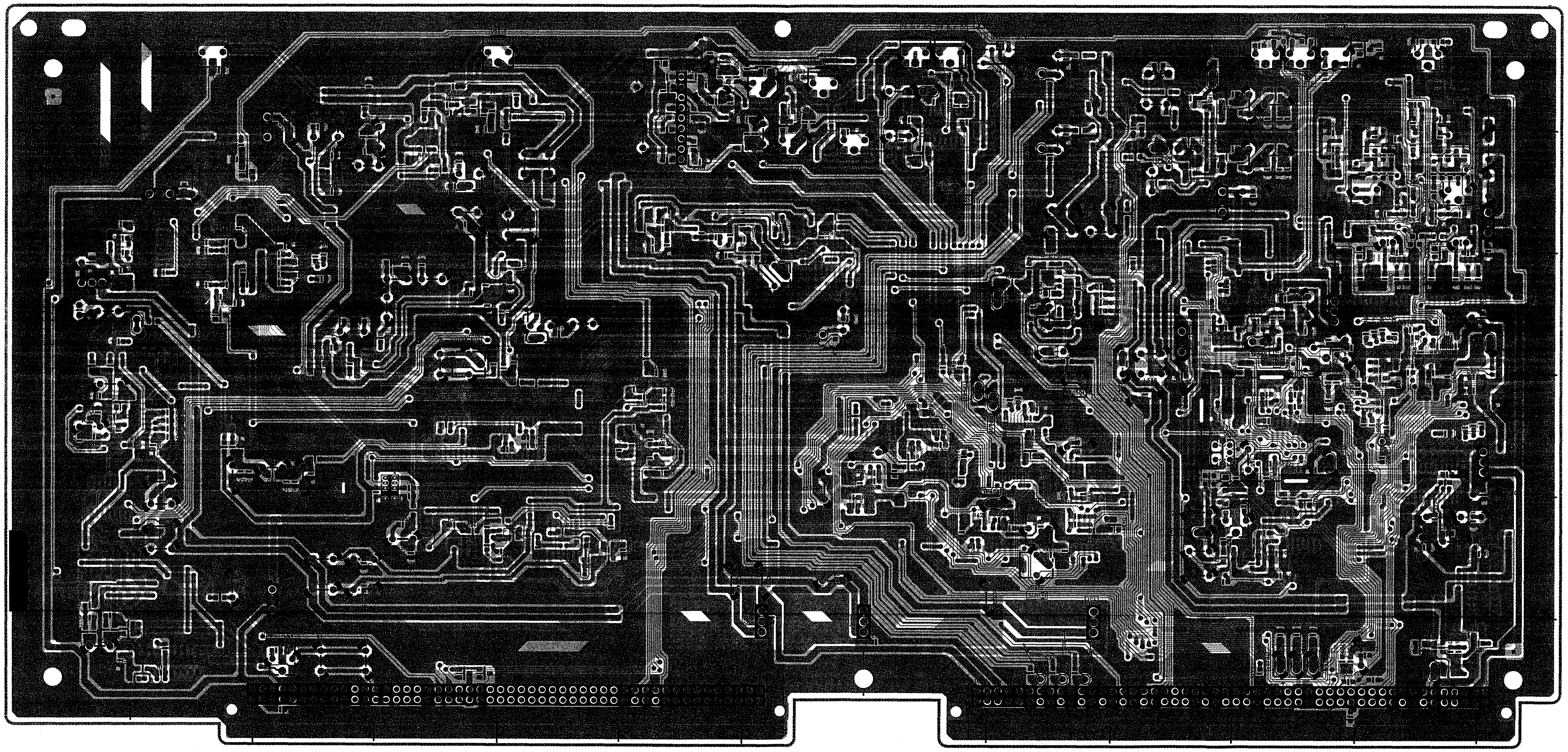

(FOIL SIDE)

Ref.No.		Part No.	Part Name & Description	Pcs	Remarks
		VEP83199B	P.C.BOARD W/COMPONENT	1	(RTL)<R>
			W4 DEC & CTCM		
			CAPACITORS		
C1,C2		ECEA0JN221S	E.CAPACITOR 6.3V 220U	2	
C3,C4		ECUM1E104ZFN	C.CAPACITOR CH 25V 0.1U	2	
C5		ECEA0JU101	E.CAPACITOR 6.3V 100U	1	
C6,C7		ECUM1H080DCN	C.CAPACITOR CH 50V 8P	2	
C8		ECUM1E104ZFN	C.CAPACITOR CH 25V 0.1U	1	
C9		ECEA0JU101	E.CAPACITOR 6.3V 100U	1	
C10		ECEA1EN4R7S	E.CAPACITOR 25V 4.7U	1	
C11		ECEA0JU471	E.CAPACITOR 6.3V 470U	1	
C52		ECEA0JU101	E.CAPACITOR 6.3V 100U	1	
C53		ECUM1E104ZFN	C.CAPACITOR CH 25V 0.1U	1	
C56		ECEA1CU100	E.CAPACITOR 16V 10U	1	
C57-59		ECUM1E104ZFN	C.CAPACITOR CH 25V 0.1U	3	
C60		ECUM1H470JCN	C.CAPACITOR CH 50V 47P	1	
C64		ECUM1E104ZFN	C.CAPACITOR CH 25V 0.1U	1	
C66		ECUM1E104ZFN	C.CAPACITOR CH 25V 0.1U	1	
C67,68		ECUM1H103KBN	C.CAPACITOR CH 50V 0.01U	2	
C69		ECUM1H820JCN	C.CAPACITOR CH 50V 82P	1	
C70		ECUM1H103KBN	C.CAPACITOR CH 50V 0.01U	1	
C72		ECUM1E104KBN	C.CAPACITOR CH 25V 0.1U	1	
C73		ECUM1H180JCN	C.CAPACITOR CH 50V 18P	1	
C74		ECUM1H040DCN	C.CAPACITOR CH 50V 4P	1	
C75		ECUM1H820JCN	C.CAPACITOR CH 50V 82P	1	
C76,77		ECUM1E104KBN	C.CAPACITOR CH 25V 0.1U	2	
C78		ECEA1EN4R7S	E.CAPACITOR 25V 4.7U	1	
C81		ECUM1H103KBN	C.CAPACITOR CH 50V 0.01U	1	
C82		ECUM1H330JCN	C.CAPACITOR CH 50V 33P	1	
C83		ECUM1E104ZFN	C.CAPACITOR CH 25V 0.1U	1	
C91		ECUM1H101JCN	C.CAPACITOR CH 50V 100P	1	
C92		ECUM1H181JCN	C.CAPACITOR CH 50V 180P	1	
C93		ECUM1H330JCN	C.CAPACITOR CH 50V 33P	1	
C94		ECUM1H181JCN	C.CAPACITOR CH 50V 180P	1	
C97		ECUM1H103KBN	C.CAPACITOR CH 50V 0.01U	1	
C101		ECEA0JU101	E.CAPACITOR 6.3V 100U	1	
C102-09		ECUM1E104ZFN	C.CAPACITOR CH 25V 0.1U	8	
C110		ECUM1H471JCN	C.CAPACITOR CH 50V 470P	1	
C111		ECUM1H680JCN	C.CAPACITOR CH 50V 68P	1	
C120		ECUM1E104ZFN	C.CAPACITOR CH 25V 0.1U	1	
C121		ECEA1CGE470	E.CAPACITOR 16V 47U	1	
C123		ECUM1E104ZFN	C.CAPACITOR CH 25V 0.1U	1	
C124		ECEA1AGE101	E.CAPACITOR 10V 100U	1	
C125		ECUM1E104ZFN	C.CAPACITOR CH 25V 0.1U	1	
C126,27		ECEA1AGE101	E.CAPACITOR 10V 100U	2	
C130,31		ECUM1E104ZFN	C.CAPACITOR CH 25V 0.1U	2	
C132		ECEA0JU101	E.CAPACITOR 6.3V 100U	1	
C133		ECUM1E104ZFN	C.CAPACITOR CH 25V 0.1U	1	
C134		ECEA1HU2R2	E.CAPACITOR 50V 2.2U	1	
C135		ECUM1E104ZFN	C.CAPACITOR CH 25V 0.1U	1	
C136		ECUM1H270JCN	C.CAPACITOR CH 50V 27P	1	
C137		ECUM1H070DCN	C.CAPACITOR CH 50V 7P	1	
C138		ECUM1H100DCN	C.CAPACITOR CH 50V 10P	1	
C139		ECEA0JU221	E.CAPACITOR 6.3V 220U	1	
C140		ECEA0JN101S	E.CAPACITOR 6.3V 100U	1	
C141		ECUM1H180JCN	C.CAPACITOR CH 50V 18P	1	
C142		ECUM1E104ZFN	C.CAPACITOR CH 25V 0.1U	1	
C143		ECUM1H150JCN	C.CAPACITOR CH 50V 15P	1	
C144		ECEA0JU101	E.CAPACITOR 6.3V 100U	1	
C145		ECUM1H680JCN	C.CAPACITOR CH 50V 68P	1	
C146,47		ECUM1H103KBN	C.CAPACITOR CH 50V 0.01U	2	
C148		ECUM1E104ZFN	C.CAPACITOR CH 25V 0.1U	1	
C149		ECEA0JU101	E.CAPACITOR 6.3V 100U	1	
C150		ECUM1H050DCN	C.CAPACITOR CH 50V 5P	1	
C151		ECUM1E104ZFN	C.CAPACITOR CH 25V 0.1U	1	
C152		ECEA0JN101S	E.CAPACITOR 6.3V 100U	1	
C153		ECUM1H150JCN	C.CAPACITOR CH 50V 15P	1	
C156		ECEA1HU2R2	E.CAPACITOR 50V 2.2U	1	
C157		ECUM1E104ZFN	C.CAPACITOR CH 25V 0.1U	1	
C158		ECUM1H221JCN	C.CAPACITOR CH 50V 220P	1	
C159		ECUM1E104ZFN	C.CAPACITOR CH 25V 0.1U	1	
C160		ECEA0JU101	E.CAPACITOR 6.3V 100U	1	
C161		ECUM1E104ZFN	C.CAPACITOR CH 25V 0.1U	1	
C162		ECUM1H103KBN	C.CAPACITOR CH 50V 0.01U	1	
C163		ECUM1H220JCN	C.CAPACITOR CH 50V 22P	1	
C164		ECEA0JU101	E.CAPACITOR 6.3V 100U	1	
C165		ECUM1E104ZFN	C.CAPACITOR CH 25V 0.1U	1	
C166		ECUM1H150JCN	C.CAPACITOR CH 50V 15P	1	
C174		ECUM1H270JCN	C.CAPACITOR CH 50V 27P	1	
C175		ECUM1H070DCN	C.CAPACITOR CH 50V 7P	1	
C176		ECUM1H100DCN	C.CAPACITOR CH 50V 10P	1	
C177		ECUM1H103KBN	C.CAPACITOR CH 50V 0.01U	1	
C178		ECUM1H050DCN	C.CAPACITOR CH 50V 5P	1	
C201,02		ECEA0JN470S	E.CAPACITOR 6.3V 47U	2	
C250		ECEA0JU101	E.CAPACITOR 6.3V 100U	1	
C264		ECUM1H103KBN	C.CAPACITOR CH 50V 0.01U	1	
C273		ECUM1H103KBN	C.CAPACITOR CH 50V 0.01U	1	
C275,76		ECUM1H103KBN	C.CAPACITOR CH 50V 0.01U	2	
C280		ECUM1H103KBN	C.CAPACITOR CH 50V 0.01U	1	
C284		ECUM1H103KBN	C.CAPACITOR CH 50V 0.01U	1	
C286		ECEA0JU101	E.CAPACITOR 6.3V 100U	1	
C287		ECUM1H103KBN	C.CAPACITOR CH 50V 0.01U	1	
C288		ECUM1H180JCN	C.CAPACITOR CH 50V 18P	1	
C289		ECUM1H040DCN	C.CAPACITOR CH 50V 4P	1	
C290		ECUM1H680JCN	C.CAPACITOR CH 50V 68P	1	
C291		ECUM1H080DCN	C.CAPACITOR CH 50V 8P	1	
C292		ECUM1H680JCN	C.CAPACITOR CH 50V 68P	1	
C293		ECEA1HU4R7	E.CAPACITOR 50V 4.7U	1	
C294,95		ECUM1E104ZFN	C.CAPACITOR CH 25V 0.1U	2	
C296		ECUM1H180JCN	C.CAPACITOR CH 50V 18P	1	
C297		ECUM1H040DCN	C.CAPACITOR CH 50V 4P	1	
C298		ECUM1H680JCN	C.CAPACITOR CH 50V 68P	1	
C299		ECUM1H080DCN	C.CAPACITOR CH 50V 8P	1	
C300		ECUM1H680JCN	C.CAPACITOR CH 50V 68P	1	
C301		ECEA1HU4R7	E.CAPACITOR 50V 4.7U	1	
C302		ECUM1E104ZFN	C.CAPACITOR CH 25V 0.1U	1	
C304		ECEA0JU101	E.CAPACITOR 6.3V 100U	1	
C305		ECUM1H103KBN	C.CAPACITOR CH 50V 0.01U	1	
C306		ECEA0JU101	E.CAPACITOR 6.3V 100U	1	
C307		ECUM1H103KBN	C.CAPACITOR CH 50V 0.01U	1	
C308,09		ECUM1H222KBN	C.CAPACITOR CH 50V 2200P	2	
C310		ECUM1H103KBN	C.CAPACITOR CH 50V 0.01U	1	
C311		ECEA1HNR47S	E.CAPACITOR CH 50V 0.47U	1	
C312		ECUM1E104KBN	C.CAPACITOR CH 25V 0.1U	1	
C313		ECUM1H103KBN	C.CAPACITOR CH 50V 0.01U	1	
C328		ECEA0JU101	E.CAPACITOR 6.3V 100U	1	
C401		ECEA0JU101	E.CAPACITOR 6.3V 100U	1	
C402,03		ECUM1H103KBN	C.CAPACITOR CH 50V 0.01U	2	
C404		ECUM1H102JCN	C.CAPACITOR CH 50V 1000P	1	
C405		ECUM1E104ZFN	C.CAPACITOR CH 25V 0.1U	1	
C406		ECUM1H331JCN	C.CAPACITOR CH 50V 330P	1	
C408		ECUM1E104ZFN	C.CAPACITOR CH 25V 0.1U	1	
C409		ECUM1H121JCN	C.CAPACITOR CH 50V 120P	1	
C410		ECUM1H103KBN	C.CAPACITOR CH 50V 0.01U	1	
C411		ECUM1H680JCN	C.CAPACITOR CH 50V 68P	1	
C412		ECUM1H150JCN	C.CAPACITOR CH 50V 15P	1	
C413		ECUM1H070DCN	C.CAPACITOR CH 50V 7P	1	
C415		ECUM1H330JCN	C.CAPACITOR CH 50V 33P	1	
C419		ECEA1HU010	E.CAPACITOR 50V 1U	1	
C421		ECUM1H270JCN	C.CAPACITOR CH 50V 27P	1	
C422		ECUM1H820JCN	C.CAPACITOR CH 50V 82P	1	
C423		ECUM1H102KBN	C.CAPACITOR CH 50V 1000P	1	
C430		ECUM1H103KBN	C.CAPACITOR CH 50V 0.01U	1	
C431,32		ECUM1E104ZFN	C.CAPACITOR CH 25V 0.1U	2	
C433,34		ECUM1H103KBN	C.CAPACITOR CH 50V 0.01U	2	
C435		ECUM1H101JCN	C.CAPACITOR CH 50V 100P	1	
C436		ECUM1E104ZFN	C.CAPACITOR CH 25V 0.1U	1	
C501		ECUM1E104ZFN	C.CAPACITOR CH 25V 0.1U	1	
C502		ECEA0JU101	E.CAPACITOR 6.3V 100U	1	
C503		ECUM1E104ZFN	C.CAPACITOR CH 25V 0.1U	1	
C504		ECEA0JU101	E.CAPACITOR 6.3V 100U	1	
C505		ECUM1H100DCN	C.CAPACITOR CH 50V 10P	1	
C506		ECEA1CU470	E.CAPACITOR 16V 47U	1	
C507		ECUM1H103KBN	C.CAPACITOR CH 50V 0.01U	1	

Ref.No.		Part No.	Part Name & Description	Pcs	Remarks
C509-11		ECUM1E104KBN	C.CAPACITOR CH 25V 0.1U	3	
C513		ECUM1E104ZFN	C.CAPACITOR CH 25V 0.1U	1	
C516,17		ECUM1H100DCN	C.CAPACITOR CH 50V 10P	2	
C520		ECUM1E104ZFN	C.CAPACITOR CH 25V 0.1U	1	
C521-23		ECUM1E104KBN	C.CAPACITOR CH 25V 0.1U	3	
C525		ECUM1H390JCN	C.CAPACITOR CH 50V 39P	1	
C526		ECUM1H070DCN	C.CAPACITOR CH 50V 7P	1	
C527		ECUM1H101JCN	C.CAPACITOR CH 50V 100P	1	
C528		ECUM1H220JCN	C.CAPACITOR CH 50V 22P	1	
C529		ECUM1H270JCN	C.CAPACITOR CH 50V 27P	1	
C533,34		ECUM1H820JCN	C.CAPACITOR CH 50V 82P	2	
C536		ECUM1H390JCN	C.CAPACITOR CH 50V 39P	1	
C537		ECUM1H070DCN	C.CAPACITOR CH 50V 7P	1	
C538		ECUM1H100DCN	C.CAPACITOR CH 50V 10P	1	
C540		ECUM1H103KBN	C.CAPACITOR CH 50V 0.01U	1	
C541		ECEA0JU101	E.CAPACITOR 6.3V 100U	1	
C542		ECUM1H103KBN	C.CAPACITOR CH 50V 0.01U	1	
C543		ECEA0JU101	E.CAPACITOR 6.3V 100U	1	
C544		ECUM1H080DCN	C.CAPACITOR CH 50V 8P	1	
C545		ECEA0JU101	E.CAPACITOR 6.3V 100U	1	
C546		ECUM1H101JCN	C.CAPACITOR CH 50V 100P	1	
C547		ECUM1H220JCN	C.CAPACITOR CH 50V 22P	1	
C548		ECUM1E104KBN	C.CAPACITOR CH 25V 0.1U	1	
C549		ECUM1H270JCN	C.CAPACITOR CH 50V 27P	1	
C550,51		ECUM1H103KBN	C.CAPACITOR CH 50V 0.01U	2	
C552		ECUM1H820JCN	C.CAPACITOR CH 50V 82P	1	
C553		ECUM1H180JCN	C.CAPACITOR CH 50V 18P	1	
C554		ECUM1H820JCN	C.CAPACITOR CH 50V 82P	1	
C555,56		ECUM1E104KBN	C.CAPACITOR CH 25V 0.1U	2	
C558		ECUM1E104KBN	C.CAPACITOR CH 25V 0.1U	1	
C559		ECUM1H103KBN	C.CAPACITOR CH 50V 0.01U	1	
C601		ECUM1E104ZFN	C.CAPACITOR CH 25V 0.1U	1	
C603		ECUM1E104ZFN	C.CAPACITOR CH 25V 0.1U	1	
C605		ECEA0JU101	E.CAPACITOR 6.3V 100U	1	
C606,07		ECUM1H680JCN	C.CAPACITOR CH 50V 68P	2	
C616-18		ECUM1E104ZFN	C.CAPACITOR CH 25V 0.1U	3	
C620		ECUM1E104ZFN	C.CAPACITOR CH 25V 0.1U	1	
C639		ECUM1H103KBN	C.CAPACITOR CH 50V 0.01U	1	
C640		ECEA0JU101	E.CAPACITOR 6.3V 100U	1	
C642		ECUM1E104ZFN	C.CAPACITOR CH 25V 0.1U	1	
C643		ECEA0JU101	E.CAPACITOR 6.3V 100U	1	
C645		ECUM1E104KBN	C.CAPACITOR CH 25V 0.1U	1	
C646		ECEA0JU101	E.CAPACITOR 6.3V 100U	1	
C647		ECUM1E104KBN	C.CAPACITOR CH 25V 0.1U	1	
C648		ECEA1HU2R2	E.CAPACITOR 50V 2.2U	1	
C657		ECEA0JU101	E.CAPACITOR 6.3V 100U	1	
C659		ECUM1H103KBN	C.CAPACITOR CH 50V 0.01U	1	
C661		ECUM1H103KBN	C.CAPACITOR CH 50V 0.01U	1	
C679		ECUM1H390JCN	C.CAPACITOR CH 50V 39P	1	
C701		ECUM1H470JCN	C.CAPACITOR CH 50V 47P	1	
C702		ECUM1H103KBN	C.CAPACITOR CH 50V 0.01U	1	
C703		ECEA0JU101	E.CAPACITOR 6.3V 100U	1	
C704		ECUM1H471JCN	C.CAPACITOR CH 50V 470P	1	
C706		ECUM1H101JCN	C.CAPACITOR CH 50V 100P	1	
C708		ECUM1H103KBN	C.CAPACITOR CH 50V 0.01U	1	
C710		ECUM1H103KBN	C.CAPACITOR CH 50V 0.01U	1	
C711		ECUM1H102JCN	C.CAPACITOR CH 50V 1000P	1	
C712		ECUM1H820JCN	C.CAPACITOR CH 50V 68P	1	
C714		ECUM1H103KBN	C.CAPACITOR CH 50V 0.01U	1	
C715		ECEA0JU101	E.CAPACITOR 6.3V 100U	1	
C716		ECUM1H103KBN	C.CAPACITOR CH 50V 0.01U	1	
C717		ECUM1H471JCN	C.CAPACITOR CH 50V 470P	1	
C718		ECUM1H103KBN	C.CAPACITOR CH 50V 0.01U	1	
C721-24		ECUM1H103KBN	C.CAPACITOR CH 50V 0.01U	4	
C726,27		ECEA1HN010SB	E.CAPACITOR 50V 1U	2	
C728		ECEA1EN4R7SB	E.CAPACITOR 25V 4.7U	1	
C729		ECUM1H680JCN	C.CAPACITOR CH 50V 68P	1	
C731		ECUM1H070DCN	C.CAPACITOR CH 50V 7P	1	
C732		ECUM1H103KBN	C.CAPACITOR CH 50V 0.01U	1	
C740		ECUM1E104ZFN	C.CAPACITOR CH 25V 0.1U	1	
C741		ECEA1CU470	E.CAPACITOR 16V 47U	1	
C742		ECEA1CU220	E.CAPACITOR 16V 22U	1	
C745,46		ECUM1H102JCN	C.CAPACITOR CH 50V 1000P	2	
C752		ECUM1H103KBN	C.CAPACITOR CH 50V 0.01U	1	
C753		ECUM1H221JCN	C.CAPACITOR CH 50V 220P	1	
C755		ECUM1H221JCN	C.CAPACITOR CH 50V 220P	1	
C761		ECUM1H220JCN	C.CAPACITOR CH 50V 22P	1	
C762		ECUM1H050DCN	C.CAPACITOR CH 50V 5P	1	
C763,64		ECUM1H560JCN	C.CAPACITOR CH 50V 56P	2	
C782		ECUM1H151JCN	C.CAPACITOR CH 50V 150P	1	
C903		ECUM1H103KBN	C.CAPACITOR CH 50V 0.01U	1	
C904		ECUM1E104ZFN	C.CAPACITOR CH 25V 0.1U	1	
C938		ECUM1H101JCN	C.CAPACITOR CH 50V 100P	1	
C939-41		ECUM1E104ZFN	C.CAPACITOR CH 25V 0.1U	3	
C944		ECEA0JU101	E.CAPACITOR 6.3V 100U	1	
C945,46		ECUM1E104ZFN	C.CAPACITOR CH 25V 0.1U	2	
C947		ECUM1H680JCN	C.CAPACITOR CH 50V 68P	1	
C953		ECUM1E104ZFN	C.CAPACITOR CH 25V 0.1U	1	
C958		ECUM1E104ZFN	C.CAPACITOR CH 25V 0.1U	1	
C961		ECUM1H270JCN	C.CAPACITOR CH 50V 27P	1	
C962		ECUM1H040DCN	C.CAPACITOR CH 50V 4P	1	
C963		ECUM1H270JCN	C.CAPACITOR CH 50V 27P	1	
C966-68		ECUM1E104ZFN	C.CAPACITOR CH 25V 0.1U	3	
C973		ECUM1E104ZFN	C.CAPACITOR CH 25V 0.1U	1	
C986		ECUM1E104ZFN	C.CAPACITOR CH 25V 0.1U	1	
CN1,N2		VJP3176B100	CONNECTOR (MALE)	2	
D61		MA151WK	DIODE	1	<R>
D101		MA151WA	DIODE	1	<R>
D102		MA151K	DIODE	1	<R>
D165,66		MA151WK	DIODE	2	<R>
D208		MA151K	DIODE	1	<R>
D401		MA151WA	DIODE	1	<R>
D404		MA151K	DIODE	1	<R>
D405		MA151WA	DIODE	1	<R>
D502		MA151WK	DIODE	1	<R>
D603		MA704	DIODE	1	<R>
D607		MA704	DIODE	1	<R>
D701		MA151K	DIODE	1	<R>
D706		MA335-R	DIODE	1	<R>
D710		MA151WA	DIODE	1	<R>
FL1		VLF0932	FILTER	1	
FL10		VLF0576	FILTER	1	
FL101,02		VLF0576	FILTER	2	
FL141		VLF0932	FILTER	1	
FL401		VLF0576	FILTER	1	
FL603		VLF0576	FILTER	1	
FL605		VLF1043	FILTER	1	
FL607		VLF0576	FILTER	1	
FL701,02		VLF0576	FILTER	2	
IC1		MC14053BF	IC	1	<R>
IC2		AN78M05	IC	1	<R>
IC3		AN79M05	IC	1	<R>
IC4		AN78M05	IC	1	<R>
IC10		AN91A12S	IC	1	<R>
IC11		MB40568PF	IC	1	<R>
IC91		MC74HC74AF	IC	1	<R>
IC101		CXD2105AQ	IC	1	<R>
IC102,03		MB40778PF	IC	2	<R>
IC141		TC4W53F	IC	1	<R>
IC142		MC14053BF	IC	1	<R>
IC144		MC14053BF	IC	1	<R>
IC165		MC14053BF	IC	1	<R>
IC212		MC14053BF	IC	1	<R>
IC214		AN6041	IC	1	<R>
IC215,16		MC14053BF	IC	2	<R>
IC217		NJM082BM	IC	1	<R>
IC218		MC14053BF	IC	1	<R>
IC219,20		NJM082BM	IC	2	<R>

Ref.No.		Part No.	Part Name & Description	Pcs	Remarks
IC401		MM74HC221AM	IC	1	<R>
IC402		SN74LS221NS	IC	1	<R>
IC403		UPD65013BC16	IC	1	<R>
IC404		MC74HC04AF	IC	1	<R>
IC405		MM74HC221AM	IC	1	<R>
IC406		MC74HC00AF	IC	1	<R>
IC408		MC14538BF	IC	1	<R>
IC409		NJM319M	IC	1	<R>
IC410		MC14528BF	IC	1	<R>
IC411		TC4W53F	IC	1	<R>
IC501		NJM082BM	IC	1	<R>
IC505		AN91A12S	IC	1	<R>
IC601,02		MB40568PF	IC	2	<R>
IC606		MB40778PF	IC	1	<R>
IC700		AN78L09	IC	1	<R>
IC703		SN74LS221NS	IC	1	<R>
IC705		MC74HC74AF	IC	1	<R>
IC706		NJM082BM	IC	1	<R>
IC707		TC4W53F	IC	1	<R>
IC709		MC74HC00AF	IC	1	<R>
IC710		SN74LS221NS	IC	1	<R>
IC712		TC4S584F	IC	1	<R>
IC714		MC74HC163AF	IC	1	<R>
IC781		SN74LS221NS	IC	1	<R>
IC901		TC4W53F	IC	1	<R>
IC909		CF45073P	IC	1	<R>
L1,L2		VLQEL05S101K	COIL 100UH	2	
L4		VLP0017	COIL	1	
L64		VLQEL05S221J	COIL 220UH	1	
L81		VLQEL05S470J	COIL 47UH	1	
L91,92		VLQEL05S2R7J	COIL 2.7UH	2	
L93		VLQEL05S151J	COIL 150UH	1	
L154		VLQEL05S150J	COIL 15UH	1	
L155		VLQEL05S180J	COIL 18UH	1	
L156,57		VLQEL05S101K	COIL 100UH	2	
L172,73		VLQEL05S101K	COIL 100UH	2	
L174		VLQEL05S150J	COIL 15UH	1	
L175		VLQEL05S180J	COIL 18UH	1	
L220,21		VLQEL05S560J	COIL 56UH	2	
L222,23		VLQEL05S101K	COIL 100UH	2	
L401		VLQEL05S470J	COIL 47UH	1	
L501,02		VLQEL05S101K	COIL 100UH	2	
L503		VLQEL05S180J	COIL 18UH	1	
L504		VLQEL05S820J	COIL 82UH	1	
L505		VLQEL05S680J	COIL 68UH	1	
L506		VLQEL05S180J	COIL 18UH	1	
L507		VLQEL05S820J	COIL 82UH	1	
L508		VLQEL05S680J	COIL 68UH	1	
L509-11		VLQEL05S101K	COIL 100UH	3	
L513		VLQEL05S221J	COIL 220UH	1	
L601,02		VLP0017	COIL	2	
L705		VLQEL05S3R3J	COIL 3.3UH	1	
L707		VLQEL05S560J	COIL 56UH	1	
L910		VLQEL05S470J	COIL 47UH	1	
Q2		2SB709-R	TRANSISTOR	1	<R>
Q3		2SD601-R	TRANSISTOR	1	<R>
Q16		2SD601-R	TRANSISTOR	1	<R>
Q17,18		2SC2295-B	TRANSISTOR	2	<R>
Q19,20		2SA1022-B	TRANSISTOR	2	<R>
Q21		2SC2295-B	TRANSISTOR	1	<R>
Q23		2SD601-R	TRANSISTOR	1	<R>
Q24		2SB709-R	TRANSISTOR	1	<R>
Q25		2SD601-R	TRANSISTOR	1	<R>
Q26		2SA1022-B	TRANSISTOR	1	<R>
Q81		2SD601-R	TRANSISTOR	1	<R>
Q82		2SB709-R	TRANSISTOR	1	<R>
Q91		2SB709-R	TRANSISTOR	1	<R>
Q101		2SA1022-B	TRANSISTOR	1	<R>
Q141-43		2SD601-R	TRANSISTOR	3	<R>

Ref.No.		Part No.	Part Name & Description	Pcs	Remarks
Q146,47		2SB709-R	TRANSISTOR	2	<R>
Q148		2SD601-R	TRANSISTOR	1	<R>
Q149,50		2SC2295-B	TRANSISTOR	2	<R>
Q151		2SA1022-B	TRANSISTOR	1	<R>
Q152		2SD601-R	TRANSISTOR	1	<R>
Q153		2SC2295-B	TRANSISTOR	1	<R>
Q154		2SB709-R	TRANSISTOR	1	<R>
Q160		2SB709-R	TRANSISTOR	1	<R>
Q161		2SD601-R	TRANSISTOR	1	<R>
Q162,63		2SC2295-B	TRANSISTOR	2	<R>
Q164		2SA1022-B	TRANSISTOR	1	<R>
Q165		2SD601-R	TRANSISTOR	1	<R>
Q201		2SB709-R	TRANSISTOR	1	<R>
Q202,03		2SD601-R	TRANSISTOR	2	<R>
Q204		2SB709-R	TRANSISTOR	1	<R>
Q230		2SB709-R	TRANSISTOR	1	<R>
Q231,32		2SD601-R	TRANSISTOR	2	<R>
Q233		2SC2404	TRANSISTOR	1	<R>
Q234		2SB709-R	TRANSISTOR	1	<R>
Q235,36		2SD601-R	TRANSISTOR	2	<R>
Q237		2SC2404	TRANSISTOR	1	<R>
Q238		2SD601-R	TRANSISTOR	1	<R>
Q240		UN2213	TRANSISTOR	1	<R>
Q241		2SD601-R	TRANSISTOR	1	<R>
Q243		2SD601-R	TRANSISTOR	1	<R>
Q402		2SD601-R	TRANSISTOR	1	<R>
Q501,02		2SB709-R	TRANSISTOR	2	<R>
Q503,04		2SC2295-B	TRANSISTOR	2	<R>
Q505		2SA1022-B	TRANSISTOR	1	<R>
Q506		2SC2295-B	TRANSISTOR	1	<R>
Q507		2SK374-R	TRANSISTOR	1	<R>
Q509,10		2SB709-R	TRANSISTOR	2	<R>
Q511,12		2SC2295-B	TRANSISTOR	2	<R>
Q513		2SA1022-B	TRANSISTOR	1	<R>
Q514		2SC2295-B	TRANSISTOR	1	<R>
Q515		2SK374-R	TRANSISTOR	1	<R>
Q516,17		2SD601-R	TRANSISTOR	2	<R>
Q518		2SB709-R	TRANSISTOR	1	<R>
Q525		2SA1022-B	TRANSISTOR	1	<R>
Q601		2SB709-R	TRANSISTOR	1	<R>
Q604-06		2SD601-R	TRANSISTOR	3	<R>
Q705		2SC2295-B	TRANSISTOR	1	<R>
Q707		2SC3757-R	TRANSISTOR	1	<R>
Q708,09		2SA1226	TRANSISTOR	2	<R>
Q710		2SC3757-R	TRANSISTOR	1	<R>
Q711		2SB709-R	TRANSISTOR	1	<R>
Q910-12		2SD601-R	TRANSISTOR	3	<R>
QR401		UN2213	TRANSISTOR	1	<R>
QR501,02		UN2213	TRANSISTOR	2	<R>
QR712,13		UN2213	TRANSISTOR	2	<R>
			RESISTORS		
R1		ERJ6GEYJ222	M.RESISTOR CH1/10W 2.2K	1	
R2		ERJ6GEYJ682	M.RESISTOR CH1/10W 6.8K	1	
R3		ERJ6GEYJ332	M.RESISTOR CH1/10W 3.3K	1	
R4,R5		ERJ6GEYJ102	M.RESISTOR CH1/10W 1K	2	
R10,11		ERJ6GEYJ102	M.RESISTOR CH1/10W 1K	2	
R12		ERJ6GEY0R00	M.RESISTOR CH1/10W 0.00	1	
R14		ERJ6GEY0R00	M.RESISTOR CH1/10W 0.00	1	
R16		ERJ6GEYJ332	M.RESISTOR CH1/10W 3.3K	1	
R17,18		ERJ6GEYJ102	M.RESISTOR CH1/10W 1K	2	
R19		ERJ6GEYJ222	M.RESISTOR CH1/10W 2.2K	1	
R20		ERJ6GEYJ221	M.RESISTOR CH1/10W 220	1	
R21		ERJ6GEYJ152	M.RESISTOR CH1/10W 1.5K	1	
R22		ERJ6GEYJ150	M.RESISTOR CH1/10W 15	1	
R23		ERJ6GEYJ472	M.RESISTOR CH1/10W 4.7K	1	
R24		ERJ6GEYJ150	M.RESISTOR CH1/10W 15	1	
R25		ERJ6GEYJ221	M.RESISTOR CH1/10W 220	1	
R26		ERJ6GEYJ152	M.RESISTOR CH1/10W 1.5K	1	
R27		ERJ6GEYJ222	M.RESISTOR CH1/10W 2.2K	1	

Ref.No.		Part No.	Part Name & Description	Pcs	Remarks
R28		ERJ6GEYJ150	M.RESISTOR CH1/10W 15	1	
R29		ERJ6GEYJ221	M.RESISTOR CH1/10W 220	1	
R30,31		ERJ6GEYJ152	M.RESISTOR CH1/10W 1.5K	2	
R32		ERJ6GEYJ472	M.RESISTOR CH1/10W 4.7K	1	
R33		ERJ6GEYJ150	M.RESISTOR CH1/10W 15	1	
R36		ERDS2TJ153	C.RESISTOR 1/4W 15K	1	
R34		ERJ6GEYJ470	M.RESISTOR CH1/10W 47	1	
R35		ERJ6GEYJ683	M.RESISTOR CH1/10W 68K	1	
R37		ERJ6GEYJ471	M.RESISTOR CH1/10W 470	1	
R38		ERJ6GEYJ223	M.RESISTOR CH1/10W 22K	1	
R39		ERJ6GEYJ472	M.RESISTOR CH1/10W 4.7K	1	
R67		ERJ6GEYJ105	M.RESISTOR CH1/10W 1M	1	
R68		ERJ6GEYJ684	M.RESISTOR CH1/10W 680K	1	
R69		ERJ6GEYJ103	M.RESISTOR CH1/10W 10K	1	
R70,71		ERJ6GEYJ223	M.RESISTOR CH1/10W 22K	2	
R72		ERJ6GEYJ222	M.RESISTOR CH1/10W 2.2K	1	
R73		ERJ6GEYJ221	M.RESISTOR CH1/10W 220	1	
R74		ERJ6GEYJ103	M.RESISTOR CH1/10W 10K	1	
R75		ERJ6GEYJ223	M.RESISTOR CH1/10W 22K	1	
R76		ERJ6GEYJ101	M.RESISTOR CH1/10W 100	1	
R77		ERJ6GEYG151	M.RESISTOR CH1/10W 150	1	
R78		ERJ6GEYJ472	M.RESISTOR CH1/10W 4.7K	1	
R79,80		ERJ6GEYJ222	M.RESISTOR CH1/10W 2.2K	2	
R81		ERJ6GEYJ153	M.RESISTOR CH1/10W 15K	1	
R82		ERJ6GEYJ821	M.RESISTOR CH1/10W 820	1	
R83		ERJ6GEYJ103	M.RESISTOR CH1/10W 10K	1	
R84		ERJ6GEYJ222	M.RESISTOR CH1/10W 2.2K	1	
R85		ERJ6GEYJ472	M.RESISTOR CH1/10W 4.7K	1	
R86		ERJ6GEYJ103	M.RESISTOR CH1/10W 10K	1	
R87		ERJ6GEYJ221	M.RESISTOR CH1/10W 220	1	
R88,89		ERJ6GEY0R00	M.RESISTOR CH1/10W 0.00	2	
R93		ERJ6GEYJ472	M.RESISTOR CH1/10W 4.7K	1	
R94		ERJ6GEYJ222	M.RESISTOR CH1/10W 2.2K	1	
R95		ERJ6GEYJ472	M.RESISTOR CH1/10W 4.7K	1	
R96		ERJ6GEYJ152	M.RESISTOR CH1/10W 1.5K	1	
R97		ERJ6GEYJ102	M.RESISTOR CH1/10W 1K	1	
R98		ERJ6GEYJ470	M.RESISTOR CH1/10W 47	1	
R99		ERJ6GEYJ472	M.RESISTOR CH1/10W 4.7K	1	
R101		ERJ6GEY0R00	M.RESISTOR CH1/10W 0.00	1	
R103		ERJ6GEY0R00	M.RESISTOR CH1/10W 0.00	1	
R106		ERJ6GEY0R00	M.RESISTOR CH1/10W 0.00	1	
R108		ERJ6GEYJ152	M.RESISTOR CH1/10W 1.5K	1	
R113		ERJ6GEYJ682	M.RESISTOR CH1/10W 6.8K	1	
R114		ERJ6GEYJ102	M.RESISTOR CH1/10W 1K	1	
R115,16		ERJ6GEYJ332	M.RESISTOR CH1/10W 3.3K	2	
R117		ERJ6GEYJ472	M.RESISTOR CH1/10W 4.7K	1	
R118		ERJ6GEYJ102	M.RESISTOR CH1/10W 1K	1	
R121		ERJ6GEY0R00	M.RESISTOR CH1/10W 0.00	1	
R131		ERJ6GEYJ103	M.RESISTOR CH1/10W 10K	1	
R134		ERJ6GEYJ223	M.RESISTOR CH1/10W 22K	1	
R135		ERJ6GEYJ472	M.RESISTOR CH1/10W 4.7K	1	
R136		ERJ6GEYJ223	M.RESISTOR CH1/10W 22K	1	
R139		ERJ6GEYJ223	M.RESISTOR CH1/10W 22K	1	
R141		VRE0034E222	M.RESISTOR CH 1/10W 2.2K	1	
R142		VRE0034E103	M.RESISTOR CH 1/10W 10K	1	
R143		ERJ6GEYJ102	M.RESISTOR CH1/10W 1K	1	
R144		ERJ6GEYJ122	M.RESISTOR CH1/10W 1.2K	1	
R145		ERJ6GEYJ682	M.RESISTOR CH1/10W 6.8K	1	
R146		ERJ6GEYJ472	M.RESISTOR CH1/10W 4.7K	1	
R147		ERJ6GEYJ332	M.RESISTOR CH1/10W 3.3K	1	
R148		ERJ6GEYJ102	M.RESISTOR CH1/10W 1K	1	
R149		ERJ6GEYJ472	M.RESISTOR CH1/10W 4.7K	1	
R150		ERJ6GEYJ470	M.RESISTOR CH1/10W 47	1	
R151		ERJ6GEYJ222	M.RESISTOR CH1/10W 2.2K	1	
R152,53		ERJ6GEYJ102	M.RESISTOR CH1/10W 1K	2	
R154		ERJ6GEYJ182	M.RESISTOR CH1/10W 1.8K	1	
R155		ERJ6GEYJ222	M.RESISTOR CH1/10W 2.2K	1	
R156		ERJ6GEYJ102	M.RESISTOR CH1/10W 1K	1	
R157		ERJ6GEYJ471	M.RESISTOR CH1/10W 470	1	
R158		ERJ6GEYJ472	M.RESISTOR CH1/10W 4.7K	1	
R159		ERJ6GEYJ101	M.RESISTOR CH1/10W 100	1	
R160		ERJ6GEYJ102	M.RESISTOR CH1/10W 1K	1	
R161		ERJ6GEYJ101	M.RESISTOR CH1/10W 100	1	
R162		ERJ6GEYJ222	M.RESISTOR CH1/10W 2.2K	1	
R163		ERJ6GEYJ101	M.RESISTOR CH1/10W 100	1	

Ref.No.		Part No.	Part Name & Description	Pcs	Remarks
R164		ERJ6GEYJ681	M.RESISTOR CH1/10W 680	1	
R165		ERJ6GEYJ471	M.RESISTOR CH1/10W 470	1	
R166		ERJ6GEYJ332	M.RESISTOR CH1/10W 3.3K	1	
R167		ERJ6GEYJ221	M.RESISTOR CH1/10W 220	1	
R168		ERJ6GEYJ682	M.RESISTOR CH1/10W 6.8K	1	
R169		ERJ6GEYJ472	M.RESISTOR CH1/10W 4.7K	1	
R170		ERJ6GEYJ470	M.RESISTOR CH1/10W 47	1	
R171		ERJ6GEYJ333	M.RESISTOR CH1/10W 33K	1	
R172		ERJ6GEYJ103	M.RESISTOR CH1/10W 10K	1	
R173		ERJ6GEYJ332	M.RESISTOR CH1/10W 3.3K	1	
R174		ERJ6GEYJ152	M.RESISTOR CH1/10W 1.5K	1	
R175,76		ERJ6GEYJ330	M.RESISTOR CH1/10W 33	2	
R177		ERJ6GEYJ101	M.RESISTOR CH1/10W 100	1	
R178		ERJ6GEYJ682	M.RESISTOR CH1/10W 6.8K	1	
R179		ERJ6GEYJ221	M.RESISTOR CH1/10W 220	1	
R180		VRE0034E222	M.RESISTOR CH 1/10W 2.2K	1	
R181		VRE0034E103	M.RESISTOR CH 1/10W 10K	1	
R182		ERJ6GEYJ103	M.RESISTOR CH1/10W 10K	1	
R183,84		ERJ6GEYJ102	M.RESISTOR CH1/10W 1K	2	
R185		ERJ6GEYJ472	M.RESISTOR CH1/10W 4.7K	1	
R186		ERJ6GEYJ222	M.RESISTOR CH1/10W 2.2K	1	
R187		ERJ6GEYJ471	M.RESISTOR CH1/10W 470	1	
R189		ERJ6GEYJ472	M.RESISTOR CH1/10W 4.7K	1	
R190		ERJ6GEYJ103	M.RESISTOR CH1/10W 10K	1	
R191		ERJ6GEYJ564	M.RESISTOR CH1/10W 560K	1	
R192		ERJ6GEYJ103	M.RESISTOR CH1/10W 10K	1	
R193		ERJ6GEYJ101	M.RESISTOR CH1/10W 100	1	
R194		ERJ6GEYJ102	M.RESISTOR CH1/10W 1K	1	
R195,96		ERJ6GEYJ101	M.RESISTOR CH1/10W 100	2	
R197		ERJ6GEYJ222	M.RESISTOR CH1/10W 2.2K	1	
R198,99		ERJ6GEYJ471	M.RESISTOR CH1/10W 470	2	
R200		ERJ6GEYJ272	M.RESISTOR CH1/10W 2.7K	1	
R201		ERJ6GEYJ470	M.RESISTOR CH1/10W 47	1	
R202		ERJ6GEYJ472	M.RESISTOR CH1/10W 4.7K	1	
R203		ERJ6GEYJ332	M.RESISTOR CH1/10W 3.3K	1	
R204		ERJ6GEYJ330	M.RESISTOR CH1/10W 33	1	
R205		ERJ6GEYJ470	M.RESISTOR CH1/10W 47	1	
R206		ERJ6GEYJ472	M.RESISTOR CH1/10W 4.7K	1	
R209		ERJ6GEYJ472	M.RESISTOR CH1/10W 4.7K	1	
R210		ERJ6GEYJ101	M.RESISTOR CH1/10W 100	1	
R211		ERJ6GEYJ330	M.RESISTOR CH1/10W 33	1	
R212		ERJ6GEYJ103	M.RESISTOR CH1/10W 10K	1	
R213-16		ERJ6GEY0R00	M.RESISTOR CH1/10W 0.00	4	
R219		ERJ6GEYJ472	M.RESISTOR CH1/10W 4.7K	1	
R220		ERJ6GEYJ101	M.RESISTOR CH1/10W 100	1	
R221		ERJ6GEYJ330	M.RESISTOR CH1/10W 33	1	
R295,96		ERJ6GEYJ682	M.RESISTOR CH1/10W 6.8K	2	
R297		ERJ6GEYJ102	M.RESISTOR CH1/10W 1K	1	
R298		ERJ6GEYJ470	M.RESISTOR CH1/10W 47	1	
R299,00		ERJ6GEYJ152	M.RESISTOR CH1/10W 1.5K	2	
R301		ERJ6GEYJ221	M.RESISTOR CH1/10W 220	1	
R302		ERJ6GEYJ470	M.RESISTOR CH1/10W 47	1	
R303		ERJ6GEYJ102	M.RESISTOR CH1/10W 1K	1	
R304		ERJ6GEYJ472	M.RESISTOR CH1/10W 4.7K	1	
R305		ERJ6GEYJ103	M.RESISTOR CH1/10W 10K	1	
R306		ERJ6GEYJ472	M.RESISTOR CH1/10W 4.7K	1	
R307		ERJ6GEYJ153	M.RESISTOR CH1/10W 15K	1	
R308		ERJ6GEYG680	M.RESISTOR CH1/10W 68	1	
R309		ERJ6GEYJ105	M.RESISTOR CH1/10W 1M	1	
R310,11		ERJ6GEYJ103	M.RESISTOR CH1/10W 10K	2	
R315,16		ERJ6GEYJ681	M.RESISTOR CH1/10W 680	2	
R317		ERJ6GEYJ102	M.RESISTOR CH1/10W 1K	1	
R318		ERJ6GEYJ470	M.RESISTOR CH1/10W 47	1	
R319		ERJ6GEYJ152	M.RESISTOR CH1/10W 1.5K	1	
R320		ERJ6GEYJ221	M.RESISTOR CH1/10W 220	1	
R321		ERJ6GEYJ152	M.RESISTOR CH1/10W 1.5K	1	
R322		ERJ6GEYJ470	M.RESISTOR CH1/10W 47	1	
R323		ERJ6GEYJ102	M.RESISTOR CH1/10W 1K	1	
R324		ERJ6GEYJ472	M.RESISTOR CH1/10W 4.7K	1	
R325		ERJ6GEYJ103	M.RESISTOR CH1/10W 10K	1	
R326		ERJ6GEYJ472	M.RESISTOR CH1/10W 4.7K	1	
R327		ERJ6GEYJ153	M.RESISTOR CH1/10W 15K	1	
R328		ERJ6GEYG680	M.RESISTOR CH1/10W 68	1	
R330		ERJ6GEYJ105	M.RESISTOR CH1/10W 1M	1	
R331,32		ERJ6GEYJ103	M.RESISTOR CH1/10W 10K	2	

Ref.No.		Part No.	Part Name & Description	Pcs	Remarks
R335		ERJ6GEYJ101	M.RESISTOR CH1/10W 100	1	
R336		ERJ6GEYJ332	M.RESISTOR CH1/10W 3.3K	1	
R337		ERJ6GEYJ223	M.RESISTOR CH1/10W 22K	1	
R338,39		ERJ6GEYJ101	M.RESISTOR CH1/10W 100	2	
R340		ERJ6GEYJ472	M.RESISTOR CH1/10W 4.7K	1	
R341		ERJ6GEYJ332	M.RESISTOR CH1/10W 3.3K	1	
R342-44		ERJ6GEYJ103	M.RESISTOR CH1/10W 10K	3	
R345		ERJ6GEYJ472	M.RESISTOR CH1/10W 4.7K	1	
R346		ERJ6GEYJ103	M.RESISTOR CH1/10W 10K	1	
R347		ERJ6GEYJ334	M.RESISTOR CH1/10W 330K	1	
R348-50		ERJ6GEYJ103	M.RESISTOR CH1/10W 10K	3	
R351		ERJ6GEYJ223	M.RESISTOR CH1/10W 22K	1	
R353		ERJ6GEYJ471	M.RESISTOR CH1/10W 470	1	
R354		ERJ6GEYJ102	M.RESISTOR CH1/10W 1K	1	
R356		ERJ6GEYJ103	M.RESISTOR CH1/10W 10K	1	
R357		ERJ6GEY0R00	M.RESISTOR CH1/10W 0.00	1	
R359		ERJ6GEYJ105	M.RESISTOR CH1/10W 1M	1	
R374		ERJ6GEYJ472	M.RESISTOR CH1/10W 4.7K	1	
R401		ERJ6GEYJ473	M.RESISTOR CH1/10W 47K	1	
R402		ERJ6GEYJ153	M.RESISTOR CH1/10W 15K	1	
R403		ERJ6GEYJ332	M.RESISTOR CH1/10W 3.3K	1	
R404		ERJ6GEYJ103	M.RESISTOR CH1/10W 10K	1	
R405		ERJ6GEYJ472	M.RESISTOR CH1/10W 4.7K	1	
R406		ERJ6GEYJ104	M.RESISTOR CH1/10W 100K	1	
R411		ERJ6GEY0R00	M.RESISTOR CH1/10W 0.00	1	
R412		ERJ6GEYJ222	M.RESISTOR CH1/10W 2.2K	1	
R414		ERJ6GEY0R00	M.RESISTOR CH1/10W 0.00	1	
R416		ERJ6GEYJ222	M.RESISTOR CH1/10W 2.2K	1	
R417		ERJ6GEYJ152	M.RESISTOR CH1/10W 1.5K	1	
R420		ERDS2TJ473	C.RESISTOR 1/4W 47K	1	
R421		ERJ6GEYJ682	M.RESISTOR CH1/10W 6.8K	1	
R422		ERJ6GEYJ473	M.RESISTOR CH1/10W 47K	1	
R425		ERJ6GEYJ472	M.RESISTOR CH1/10W 4.7K	1	
R427		ERJ6GEYJ103	M.RESISTOR CH1/10W 10K	1	
R432		ERJ6GEYJ473	M.RESISTOR CH1/10W 47K	1	
R433		ERJ6GEYJ393	M.RESISTOR CH1/10W 39K	1	
R437		ERJ6GEYJ222	M.RESISTOR CH1/10W 2.2K	1	
R439		ERJ6GEYJ152	M.RESISTOR CH1/10W 1.5K	1	
R440		ERJ6GEYJ472	M.RESISTOR CH1/10W 4.7K	1	
R441		ERJ6GEYJ152	M.RESISTOR CH1/10W 1.5K	1	
R445		ERJ6GEYJ222	M.RESISTOR CH1/10W 2.2K	1	
R451		ERJ6GEYJ221	M.RESISTOR CH1/10W 220	1	
R452		ERJ6GEYJ682	M.RESISTOR CH1/10W 6.8K	1	
R453		ERJ6GEYJ332	M.RESISTOR CH1/10W 3.3K	1	
R460		ERJ6GEYJ472	M.RESISTOR CH1/10W 4.7K	1	
R461		ERJ6GEYJ103	M.RESISTOR CH1/10W 10K	1	
R462		ERJ6GEYJ101	M.RESISTOR CH1/10W 100	1	
R463,64		ERJ6GEYJ472	M.RESISTOR CH1/10W 4.7K	2	
R465		ERJ6GEYJ105	M.RESISTOR CH1/10W 1M	1	
R466		ERJ6GEYJ103	M.RESISTOR CH1/10W 10K	1	
R467		ERJ6GEYJ101	M.RESISTOR CH1/10W 100	1	
R468		ERJ6GEYJ472	M.RESISTOR CH1/10W 4.7K	1	
R469		ERJ6GEY0R00	M.RESISTOR CH1/10W 0.00	1	
R501		ERJ6GEYJ222	M.RESISTOR CH1/10W 2.2K	1	
R502		ERJ6GEYJ102	M.RESISTOR CH1/10W 1K	1	
R503		ERJ6GEYJ682	M.RESISTOR CH1/10W 6.8K	1	
R504		ERJ6GEYJ222	M.RESISTOR CH1/10W 2.2K	1	
R505		VRE0034E102	M.RESISTOR CH 1/10W 1K	1	
R506		ERJ6GEYJ222	M.RESISTOR CH1/10W 2.2K	1	
R507		ERJ6GEYJ102	M.RESISTOR CH1/10W 1K	1	
R508		ERJ6GEYJ470	M.RESISTOR CH1/10W 47	1	
R509,10		ERJ6GEYJ102	M.RESISTOR CH1/10W 1K	2	
R511		ERJ6GEYJ470	M.RESISTOR CH1/10W 47	1	
R512		ERJ6GEYJ102	M.RESISTOR CH1/10W 1K	1	
R513		VRE006606472	M.RESISTOR CH 1/10W 4.7K	1	
R514		ERJ6GEYJ222	M.RESISTOR CH1/10W 2.2K	1	
R515		ERJ6GEYJ473	M.RESISTOR CH1/10W 47K	1	
R516		ERJ6GEYJ332	M.RESISTOR CH1/10W 3.3K	1	
R517,18		ERJ6GEYJ101	M.RESISTOR CH1/10W 100	2	
R519		ERJ6GEYJ154	M.RESISTOR CH1/10W 150K	1	
R520		ERJ6GEYJ103	M.RESISTOR CH1/10W 10K	1	
R521		ERJ6GEYJ331	M.RESISTOR CH1/10W 330	1	
R522		ERJ6GEYK475	M.RESISTOR CH1/10W 4.7M	1	
R523		ERJ6GEYJ103	M.RESISTOR CH1/10W 10K	1	
R524		ERJ6GEYJ472	M.RESISTOR CH1/10W 4.7K	1	

Ref.No.		Part No.	Part Name & Description	Pcs	Remarks
R525		ERJ6GEYJ103	M.RESISTOR CH1/10W 10K	1	
R526		ERJ6GEYJ222	M.RESISTOR CH1/10W 2.2K	1	
R527		ERJ6GEYJ102	M.RESISTOR CH1/10W 1K	1	
R528		ERJ6GEYJ682	M.RESISTOR CH1/10W 6.8K	1	
R529		ERJ6GEYJ222	M.RESISTOR CH1/10W 2.2K	1	
R530		ERJ6GEYJ104	M.RESISTOR CH1/10W 100K	1	
R531		ERJ6GEYJ222	M.RESISTOR CH1/10W 2.2K	1	
R532		ERJ6GEYJ102	M.RESISTOR CH1/10W 1K	1	
R533		ERJ6GEYJ470	M.RESISTOR CH1/10W 47	1	
R535		VRE006606472	M.RESISTOR CH 1/10W 4.7K	1	
R536		ERJ6GEYJ473	M.RESISTOR CH1/10W 47K	1	
R538		ERJ6GEYJ332	M.RESISTOR CH1/10W 3.3K	1	
R539		VRE0034E102	M.RESISTOR CH 1/10W 1K	1	
R540		ERJ6GEYJ103	M.RESISTOR CH1/10W 10K	1	
R541		ERJ6GEYJ154	M.RESISTOR CH1/10W 150K	1	
R543		ERJ6GEYJ331	M.RESISTOR CH1/10W 330	1	
R544		ERJ6GEYJ103	M.RESISTOR CH1/10W 10K	1	
R545		ERJ6GEYK475	M.RESISTOR CH1/10W 4.7M	1	
R546		ERJ6GEYJ472	M.RESISTOR CH1/10W 4.7K	1	
R547		ERJ6GEYJ103	M.RESISTOR CH1/10W 10K	1	
R549		ERJ6GEYJ104	M.RESISTOR CH1/10W 100K	1	
R550		ERJ6GEYJ102	M.RESISTOR CH1/10W 1K	1	
R551,52		ERJ6GEYJ101	M.RESISTOR CH1/10W 100	2	
R553		ERJ6GEYJ222	M.RESISTOR CH1/10W 2.2K	1	
R554		ERJ6GEYJ221	M.RESISTOR CH1/10W 220	1	
R555		ERJ6GEYJ682	M.RESISTOR CH1/10W 6.8K	1	
R556		ERJ6GEYJ332	M.RESISTOR CH1/10W 3.3K	1	
R559		ERJ6GEYJ152	M.RESISTOR CH1/10W 1.5K	1	
R560		ERJ6GEYJ682	M.RESISTOR CH1/10W 6.8K	1	
R561		ERJ6GEYJ273	M.RESISTOR CH1/10W 27K	1	
R562		ERJ6GEYJ153	M.RESISTOR CH1/10W 15K	1	
R571		ERJ6GEYJ152	M.RESISTOR CH1/10W 1.5K	1	
R572		ERJ6GEYJ271	M.RESISTOR CH1/10W 270	1	
R573		ERJ6GEYJ101	M.RESISTOR CH1/10W 100	1	
R574		ERJ6GEYJ102	M.RESISTOR CH1/10W 1K	1	
R575		ERJ6GEYJ330	M.RESISTOR CH1/10W 33	1	
R576		ERJ6GEYJ105	M.RESISTOR CH1/10W 1M	1	
R577		ERJ6GEYJ684	M.RESISTOR CH1/10W 680K	1	
R578		ERJ6GEYJ103	M.RESISTOR CH1/10W 10K	1	
R579		ERJ6GEYJ222	M.RESISTOR CH1/10W 2.2K	1	
R580		ERJ6GEYJ103	M.RESISTOR CH1/10W 10K	1	
R581-83		ERJ6GEYJ223	M.RESISTOR CH1/10W 22K	3	
R584		ERJ6GEYJ152	M.RESISTOR CH1/10W 1.5K	1	
R585		ERJ6GEYJ470	M.RESISTOR CH1/10W 47	1	
R589		ERJ6GEYJ221	M.RESISTOR CH1/10W 220	1	
R593		ERJ6GEYJ470	M.RESISTOR CH1/10W 47	1	
R601,02		ERJ6GEYJ101	M.RESISTOR CH1/10W 100	2	
R614		VRE0034E473	M.RESISTOR CH 1/10W 47K	1	
R615		VRE0034E223	M.RESISTOR CH 1/10W 22K	1	
R616		VRE0034E473	M.RESISTOR CH 1/10W 47K	1	
R617		VRE0034E223	M.RESISTOR CH 1/10W 22K	1	
R621		ERJ6GEYJ103	M.RESISTOR CH1/10W 10K	1	
R622		ERJ6GEYJ102	M.RESISTOR CH1/10W 1K	1	
R623,24		VRE0034E471	M.RESISTOR CH 1/10W 470	2	
R625		ERJ6GEYJ470	M.RESISTOR CH1/10W 47	1	
R631		ERJ6GEYJ101	M.RESISTOR CH1/10W 100	1	
R632		ERJ6GEYJ472	M.RESISTOR CH1/10W 4.7K	1	
R633		ERJ6GEYJ272	M.RESISTOR CH1/10W 2.7K	1	
R635		VRE0034E681	M.RESISTOR CH 1/10W 680	1	
R636		VRE0034E152	M.RESISTOR CH 1/10W 1.5K	1	
R638		ERJ6GEYJ222	M.RESISTOR CH1/10W 2.2K	1	
R648		ERJ6GEYJ330	M.RESISTOR CH1/10W 33	1	
R656		ERJ6GEYJ221	M.RESISTOR CH1/10W 220	1	
R658		VRE0034E222	M.RESISTOR CH 1/10W 2.2K	1	
R659		VRE0034E103	M.RESISTOR CH 1/10W 10K	1	
R660-67		ERJ6GEYJ331	M.RESISTOR CH1/10W 330	8	
R701		ERJ6GEYJ103	M.RESISTOR CH1/10W 10K	1	
R702		ERJ6GEYJ682	M.RESISTOR CH1/10W 6.8K	1	
R703		ERJ6GEYJ222	M.RESISTOR CH1/10W 2.2K	1	
R704		ERJ6GEYJ683	M.RESISTOR CH1/10W 68K	1	
R705		ERJ6GEYJ332	M.RESISTOR CH1/10W 3.3K	1	
R706,07		ERJ6GEYJ562	M.RESISTOR CH1/10W 5.6K	2	
R708		ERJ6GEYJ332	M.RESISTOR CH1/10W 3.3K	1	
R709		ERJ6GEYJ153	M.RESISTOR CH1/10W 15K	1	
R710		ERJ6GEYJ681	M.RESISTOR CH1/10W 680	1	

Ref.No.		Part No.	Part Name & Description	Pcs	Remarks
R712		ERJ6GEYJ682	M.RESISTOR CH1/10W 6.8K	1	
R713		ERJ6GEYJ152	M.RESISTOR CH1/10W 1.5K	1	
R719		ERJ6GEYJ103	M.RESISTOR CH1/10W 10K	1	
R721		ERJ6GEYJ223	M.RESISTOR CH1/10W 22K	1	
R722		ERJ6GEYJ682	M.RESISTOR CH1/10W 6.8K	1	
R730		ERJ6GEYJ152	M.RESISTOR CH1/10W 1.5K	1	
R731		ERJ6GEYJ393	M.RESISTOR CH1/10W 39K	1	
R732		ERJ6GEYJ223	M.RESISTOR CH1/10W 22K	1	
R738		ERJ6GEYJ152	M.RESISTOR CH1/10W 1.5K	1	
R742		ERJ6GEYJ104	M.RESISTOR CH1/10W 100K	1	
R743		ERJ6GEYJ103	M.RESISTOR CH1/10W 10K	1	
R751		ERJ6GEYJ472	M.RESISTOR CH1/10W 4.7K	1	
R752		ERJ6GEYJ102	M.RESISTOR CH1/10W 1K	1	
R753,54		ERJ6GEYJ472	M.RESISTOR CH1/10W 4.7K	2	
R755,56		ERJ6GEYJ222	M.RESISTOR CH1/10W 2.2K	2	
R761		ERJ6GEYJ103	M.RESISTOR CH1/10W 10K	1	
R762		ERJ6GEYJ123	M.RESISTOR CH1/10W 12K	1	
R763,64		ERJ6GEYJ102	M.RESISTOR CH1/10W 1K	2	
R765		ERJ6GEYJ332	M.RESISTOR CH1/10W 3.3K	1	
R766		ERJ6GEYJ470	M.RESISTOR CH1/10W 47	1	
R770,71		ERJ6GEYJ682	M.RESISTOR CH1/10W 6.8K	2	
R783		ERJ6GEYJ103	M.RESISTOR CH1/10W 10K	1	
R901		ERJ6GEY0R00	M.RESISTOR CH1/10W 0.00	1	
R902		ERJ6GEYJ473	M.RESISTOR CH1/10W 47K	1	
R921		ERJ6GEYJ682	M.RESISTOR CH1/10W 6.8K	1	
R922		ERJ6GEYJ103	M.RESISTOR CH1/10W 10K	1	
R926		ERJ6GEYJ682	M.RESISTOR CH1/10W 6.8K	1	
R927		ERJ6GEYJ102	M.RESISTOR CH1/10W 1K	1	
R932		ERJ6GEYJ104	M.RESISTOR CH1/10W 100K	1	
R933		ERJ6GEYG680	M.RESISTOR CH1/10W 68	1	
R934		ERJ6GEYJ562	M.RESISTOR CH1/10W 5.6K	1	
R935		ERJ6GEYJ152	M.RESISTOR CH1/10W 1.5K	1	
R936		ERJ6GEY0R00	M.RESISTOR CH1/10W 0.00	1	
R938,39		ERJ6GEY0R00	M.RESISTOR CH1/10W 0.00	2	
R942-44		ERJ6GEY0R00	M.RESISTOR CH1/10W 0.00	3	
R945		ERJ6GEYJ152	M.RESISTOR CH1/10W 1.5K	1	
R946		ERJ6GEYJ102	M.RESISTOR CH1/10W 1K	1	
R947		ERJ6GEYJ122	M.RESISTOR CH1/10W 1.2K	1	
R950		ERJ6GEYJ682	M.RESISTOR CH1/10W 6.8K	1	
R951		ERJ6GEYJ472	M.RESISTOR CH1/10W 4.7K	1	
R952		ERJ6GEYJ332	M.RESISTOR CH1/10W 3.3K	1	
R953		ERJ6GEYJ684	M.RESISTOR CH1/10W 680K	1	
R980		ERJ6GEYJ102	M.RESISTOR CH1/10W 1K	1	
R981,82		ERJ6GEYJ682	M.RESISTOR CH1/10W 6.8K	2	
R984		ERJ6GEYJ472	M.RESISTOR CH1/10W 4.7K	1	
R997		ERJ6GEYJ473	M.RESISTOR CH1/10W 47K	1	
R999		ERJ6GEY0R00	M.RESISTOR CH1/10W 0.00	1	
SW401		VSS0283	SWITCH	1	<R>
VC141		VCV0050	TRIMMER	1	
VC401		VCV0050	TRIMMER	1	
VC501,02		VCV0031	TRIMMER	2	
VL701		VLQ0415	COIL	1	
VR1		EVMEASA00B13	V.RESISTOR 1K	1	
VR81		EVMEASA00B13	V.RESISTOR 1K	1	
VR141,42		EVMEASA00B23	V.RESISTOR 2K	2	
VR165		EVMEASA00B23	V.RESISTOR 2K	1	
VR212-15		EVMEGSA00B13	V.RESISTOR 1K	4	
VR216,17		EVMEGSA00B14	V.RESISTOR 10K	2	
VR218		EVMEGSA00B53	V.RESISTOR 5K	1	
VR219		EVMEGSA00B14	V.RESISTOR 10K	1	
VR401,02		EVMEASA00B13	V.RESISTOR 1K	2	
VR501,02		EVMEGSA00B23	V.RESISTOR 2K	2	
VR503		EVMEASA00B53	V.RESISTOR 5K	1	

Ref.No.		Part No.	Part Name & Description	Pcs	Remarks
VR601,02		EVMEGSA00B14	V.RESISTOR 10K	2	
VR701		EVMEGSA00B23	V.RESISTOR 2K	1	
VR702		EVMEASA00B53	V.RESISTOR 5K	1	
VR906		EVMEASA00B53	V.RESISTOR 5K	1	
X201		VSX0270	CRYSTAL OSCILLATOR	1	<R>
			MISCELLANEOUS		
		VML2143	CARD PULLER	1	
		VML2144	CARD PULLER	1	
		VMZ1547	BARRIER	1	
		VXA3966	P.C.B. SHIELD PLATE	1	
		XYNV3+K6FR	SCREW	5	

MODULES

- Block Diagrams
- Schematic Diagrams
- Printed Circuit Boards

This section provides the block diagrams, schematic diagrams and printed circuit boards.

Note:

1. Do not use the part numbers shown on the schematic diagram or P.C.Board layout for ordering.
   The correct part number for ordering is shown in the Exploded View/Parts List section.
2. Unless otherwise specified, all resistors are in OHMS, K = 1,000 OHMS, all capacitors are in MICROFARADS (uF), P = uuF.
3. The foil paterns on the P.C.Board layout, printed with the blue color is the component side.
4. Please refer to the Electrical Parts List for the value and existance of component parts on the P.C.Board.

Panasonic

CONTENTS

BLOCK DIAGRAM

OVER ALL BLOCK DIAGRAM(AU-65H) BLK-1
W1(TBC & SYNC GEN) BLOCK DIAGRAM1/3(NTSC) BLK-2
W1(TBC & SYNC GEN) BLOCK DIAGRAM1/3(PAL) BLK-3
W1(TBC & SYNC GEN) BLOCK DIAGRAM2/3 .... BLK-4
W1(TBC & SYNC GEN) BLOCK DIAGRAM3/3 .... BLK-5
W4(DEC & CTCM) BLOCK DIAGRAM1/4(AU-65H NTSC) BLK-6
W4(DEC & CTCM) BLOCK DIAGRAM2/4(AU-65H NTSC) BLK-7
W4(DEC & CTCM) BLOCK DIAGRAM3/4(AU-65H NTSC) BLK-8
W4(DEC & CTCM) BLOCK DIAGRAM4/4(AU-65H NTSC) BLK-9
W4(DECODER) BLOCK DIAGRAM1/4(AU-65H PAL) BLK-10
W4(DECODER) BLOCK DIAGRAM2/4(AU-65H PAL) BLK-11
W4(DECODER) BLOCK DIAGRAM3/4(AU-65H PAL) BLK-12
W4(DECODER) BLOCK DIAGRAM4/4(AU-65H PAL) BLK-13
SENC & P IN P BLOCK DIAGRAM1/2(AU-65H) BLK-14
SENC & P IN P BLOCK DIAGRAM2/2(AU-65H) BLK-15
W6(AUDIO) BLOCK DIAGRAM1/3 .... BLK-16
W6(AUDIO) BLOCK DIAGRAM2/3 .... BLK-17
W6(AUDIO) BLOCK DIAGRAM3/3 .... BLK-18
B1(SYSTEM CONTROL) BLOCK DIAGRAM1/3 .... BLK-19
B1(SYSTEM CONTROL) BLOCK DIAGRAM2/3 .... BLK-20
B1(SYSTEM CONTROL) BLOCK DIAGRAM3/3 .... BLK-21
FRONT PANEL A,B BLOCK DIAGRAM(AU-65H) BLK-22
VIDEO I/O BLOCK DIAGRAM1/2 .... BLK-23
VIDEO I/O BLOCK DIAGRAM2/2 .... BLK-24

SCHEMATIC DIAGRAM

INTERCONNECTION1/4 .... SCM-1
INTERCONNECTION2/4 .... SCM-1
INTERCONNECTION3/4 .... SCM-2
INTERCONNECTION4/4 .... SCM-2
W0(W,MOTHER) SCHEMATIC DIAGRAM1/4 .... SCM-3
W0(W,MOTHER) SCHEMATIC DIAGRAM2/4 .... SCM-3
W0(W,MOTHER) SCHEMATIC DIAGRAM3/4 .... SCM-4
W0(W,MOTHER) SCHEMATIC DIAGRAM4/4 .... SCM-4
W1(TBC & SYNC GEN) SCHEMATIC DIAGRAM1/6 .... SCM-5
W1(TBC & SYNC GEN) SCHEMATIC DIAGRAM2/6 .... SCM-5
W1(TBC & SYNC GEN) SCHEMATIC DIAGRAM3/6 .... SCM-6
W1(TBC & SYNC GEN) SCHEMATIC DIAGRAM4/6 .... SCM-6
W1(TBC & SYNC GEN) SCHEMATIC DIAGRAM5/6 .... SCM-7
W1(TBC & SYNC GEN) SCHEMATIC DIAGRAM6/6 .... SCM-7

W2(ENCODER) SCHEMATIC DIAGRAM1/4(NTSC) SCM-8
W2(ENCODER) SCHEMATIC DIAGRAM2/4(NTSC) SCM-8
W2(ENCODER) SCHEMATIC DIAGRAM3/4(NTSC) SCM-9
W2(ENCODER) SCHEMATIC DIAGRAM4/4(AU-65H PAL) SCM-9
W4(DECODER) SCHEMATIC DIAGRAM1/4(AU-65H NTSC) SCM-10
W4(DECODER) SCHEMATIC DIAGRAM2/4(AU-65H NTSC) SCM-10
W4(DECODER) SCHEMATIC DIAGRAM3/4(AU-65H NTSC) SCM-11
W4(DECODER) SCHEMATIC DIAGRAM4/4(AU-65H NTSC) SCM-11
W4(DECODER) SCHEMATIC DIAGRAM1/4 (AU-65H PAL) SCM-12
W4(DECODER) SCHEMATIC DIAGRAM2/4(AU-65H PAL) SCM-12
W4(DECODER) SCHEMATIC DIAGRAM3/4(AU-65H PAL) SCM-13
W4(DECODER) SCHEMATIC DIAGRAM4/4(AU-65H PAL) SCM-13
SENC & P IN P SCHEMATIC DIAGRAM1/2(AU-65H) SCM-14
SENC & P IN P SCHEMATIC DIAGRAM2/2(AU-65H) SCM-14
W6(AUDIO) SCHEMATIC DIAGRAM1/4 .... SCM-15
W6(AUDIO) SCHEMATIC DIAGRAM2/4 .... SCM-15
W6(AUDIO) SCHEMATIC DIAGRAM3/4 .... SCM-16
W6(AUDIO) SCHEMATIC DIAGRAM4/4 .... SCM-16
B0(B,MOTHER) SCHEMATIC DIAGRAM1/2 .... SCM-17
B0(B,MOTHER) SCHEMATIC DIAGRAM2/2 .... SCM-17
B1(SYSTEM CONTROL) SCHEMATIC DIAGRAM1/5 .... SCM-18
B1(SYSTEM CONTROL) SCHEMATIC DIAGRAM2/5 .... SCM-18
B1(SYSTEM CONTROL) SCHEMATIC DIAGRAM3/5 .... SCM-19
B1(SYSTEM CONTROL) SCHEMATIC DIAGRAM4/5 .... SCM-19
B1(SYSTEM CONTROL) SCHEMATIC DIAGRAM5/5 .... SCM-20
VIDEO I/O SCHEMATIC DIAGRAM SCM-20
AUDIO I/O SCHEMATIC DIAGRAM1/2 .... SCM-21
AUDIO I/O SCHEMATIC DIAGRAM2/2 .... SCM-21
FRONT INTERFACE SCHEMATIC DIAGRAM(NTSC) SCM-22
FRONT INTERFACE SCHEMATIC DIAGRAM(PAL) SCM-22
FRONT PANEL A SCHEMATIC DIAGRAM1/2 .... SCM-23
FRONT PANEL A SCHEMATIC DIAGRAM2/2 .... SCM-23
FRONT PANEL B SCHEMATIC DIAGRAM1/2 .... SCM-24
FRONT PANEL B SCHEMATIC DIAGRAM2/2 .... SCM-24

❶ LOCATION OF TEST POINTS & CONTROLS (W1, W4)

P.C. Board Location

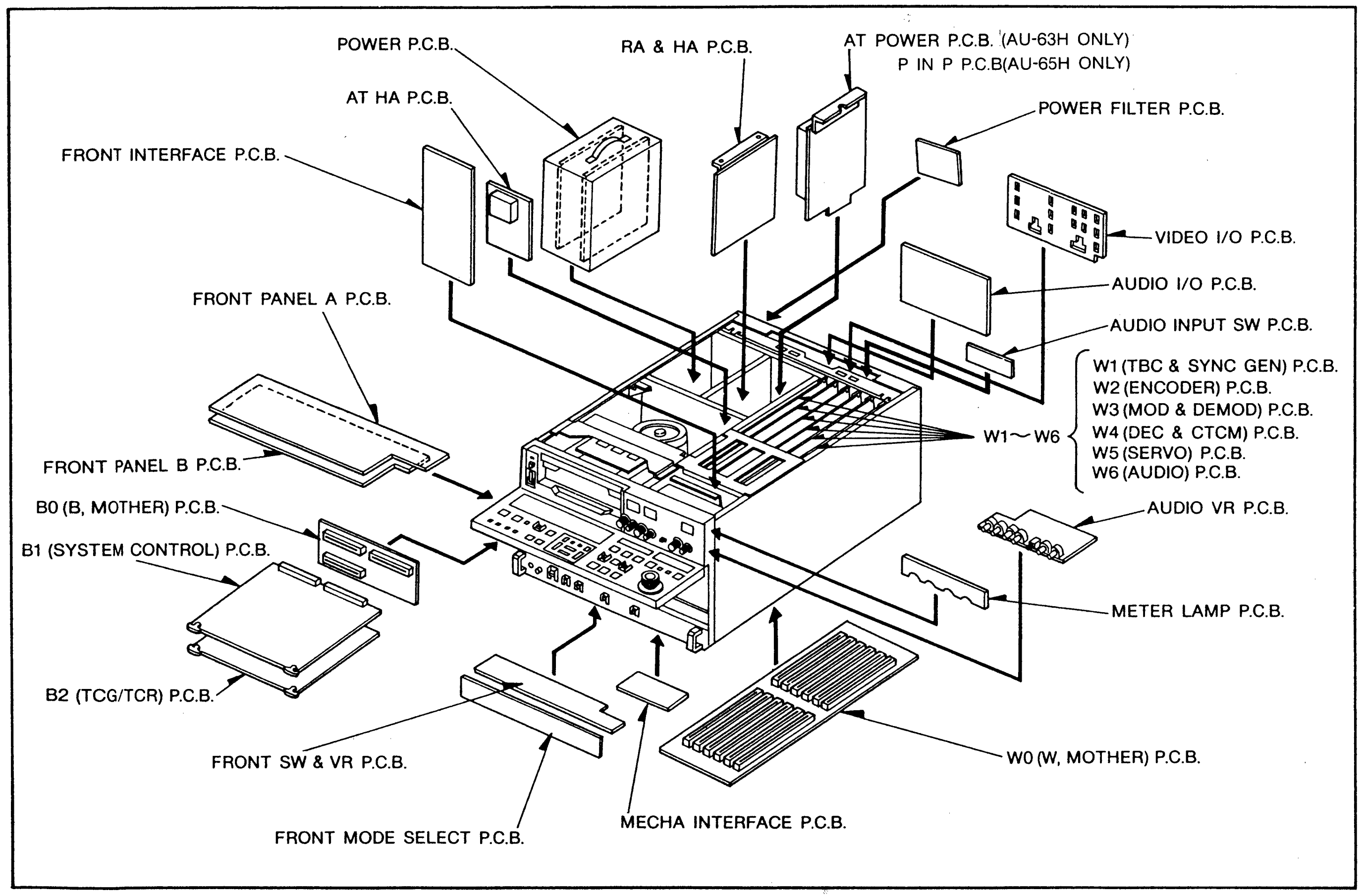
POWER P.C.B.
RA & HA P.C.B.
AT POWER P.C.B. (AU-63H ONLY)
P IN P P.C.B(AU-65H ONLY)
AT HA P.C.B.
POWER FILTER P.C.B.
FRONT INTERFACE P.C.B.
VIDEO I/O P.C.B.
AUDIO I/O P.C.B.
FRONT PANEL A P.C.B.
AUDIO INPUT SW P.C.B.
W1 (TBC & SYNC GEN) P.C.B.
W2 (ENCODER) P.C.B.
W3 (MOD & DEMOD) P.C.B.
W1～W6
W4 (DEC & CTCM) P.C.B.
W5 (SERVO) P.C.B.
W6 (AUDIO) P.C.B.
FRONT PANEL B P.C.B.
B0 (B, MOTHER) P.C.B.
AUDIO VR P.C.B.
B1 (SYSTEM CONTROL) P.C.B.
METER LAMP P.C.B.
B2 (TCG/TCR) P.C.B.
W0 (W, MOTHER) P.C.B.
FRONT SW & VR P.C.B.
MECHA INTERFACE P.C.B.
FRONT MODE SELECT P.C.B.

W1 TBC & SYNC GEN P.C.B.

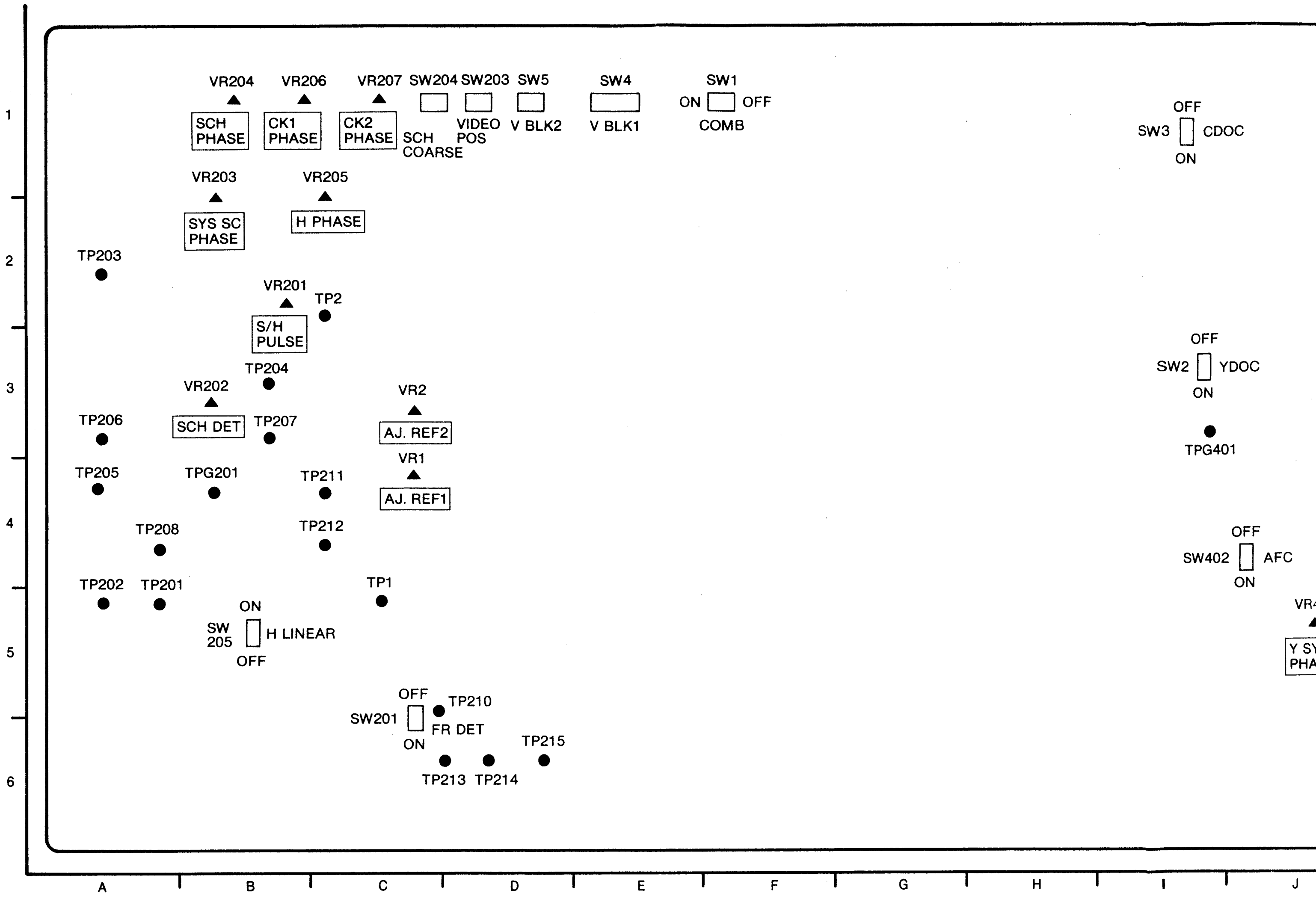
VR204
SCH PHASE
VR206
CK1 PHASE
VR207
CK2 PHASE
SW204
SCH COARSE
SW203
VIDEO POS
SW5
V BLK2
SW4
V BLK1
SW1
ON OFF
COMB
OFF
SW3 CDOC
ON
VR203
SYS SC PHASE
VR205
H PHASE
TP203
VR201
S/H PULSE
TP2
OFF
SW2 YDOC
ON
TP204
VR202
SCH DET
TP207
VR2
AJ. REF2
TP206
TPG401
VR1
AJ. REF1
TP205
TPG201
TP211
TP208
TP212
OFF
SW402 AFC
ON
TP202
TP201
TP1
ON
SW 205
H LINEAR
OFF
VR
Y S
PHA
OFF
SW201
TP210
FR DET
ON
TP215
TP213
TP214
1
2
3
4
5
6
A
B
C
D
E
F
G
H
I
J

AU-65H W1 TBC & SYNC

ADJUSTMENT				TESTPOINT				
VR1	C-4	VR405	L-1	TP1	C-5	TP212	C-4	TP427
VR2	C-3	VR406	L-1	TP2	C-2	TP213	D-6	TPG201
VR201	B-2	VR408	M-5	TP201	A-5	TP214	D-6	TPG401
VR202	B-3	VR409	L-2	TP202	A-5	TP215	D-6	TPG402
VR203	B-2	VR410	L-4	TP203	A-2	TP412	M-5	SWI
VR204	B-1			TP204	B-3	TP413	L-6	SW1
VR205	C-2			TP205	A-4	TP416	L-6	SW2
VR206	B-1			TP206	A-3	TP417	M-5	SW3
VR207	C-1			TP207	B-3	TP422	J-4	SW4
VR401	J-5			TP208	A-4	TP423	K-4	SW5
VR402	L-2			TP210	C-5	TP424	M-4	SW6
VR403	M-5			TP211	C-4	TP425	M-4	SW7
						TP426	L-4	

ADDRESS INFORMATION

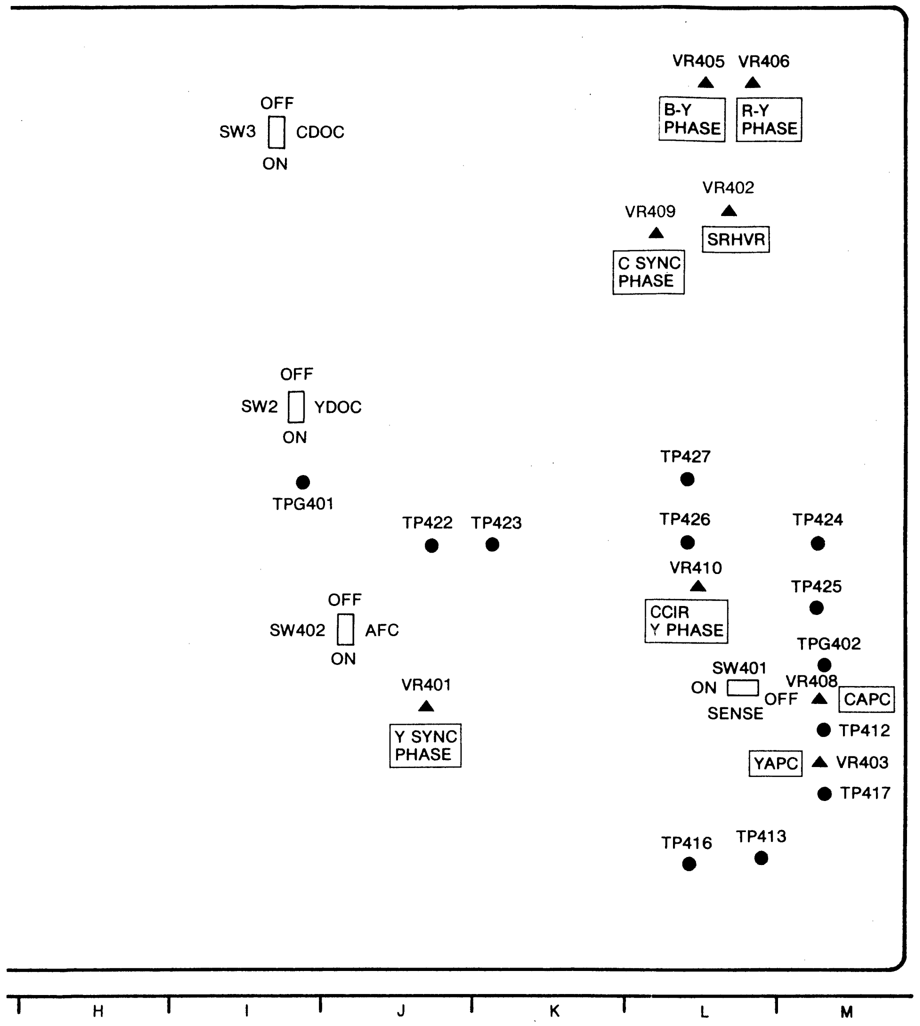

VR405
VR406
B-Y PHASE
R-Y PHASE
OFF
SW3
CDOC
ON
VR402
VR409
SRHVR
C SYNC PHASE
OFF
SW2
YDOC
ON
TPG401
TP427
TP422
TP423
TP426
TP424
VR410
CCIR Y PHASE
TP425
OFF
SW402
AFC
ON
TPG402
SW401
ON
OFF
SENSE
VR408
CAPC
VR401
TP412
Y SYNC PHASE
YAPC
VR403
TP417
TP416
TP413
H
I
J
K
L
M

W4 DECODER/CTCM P.C.B.

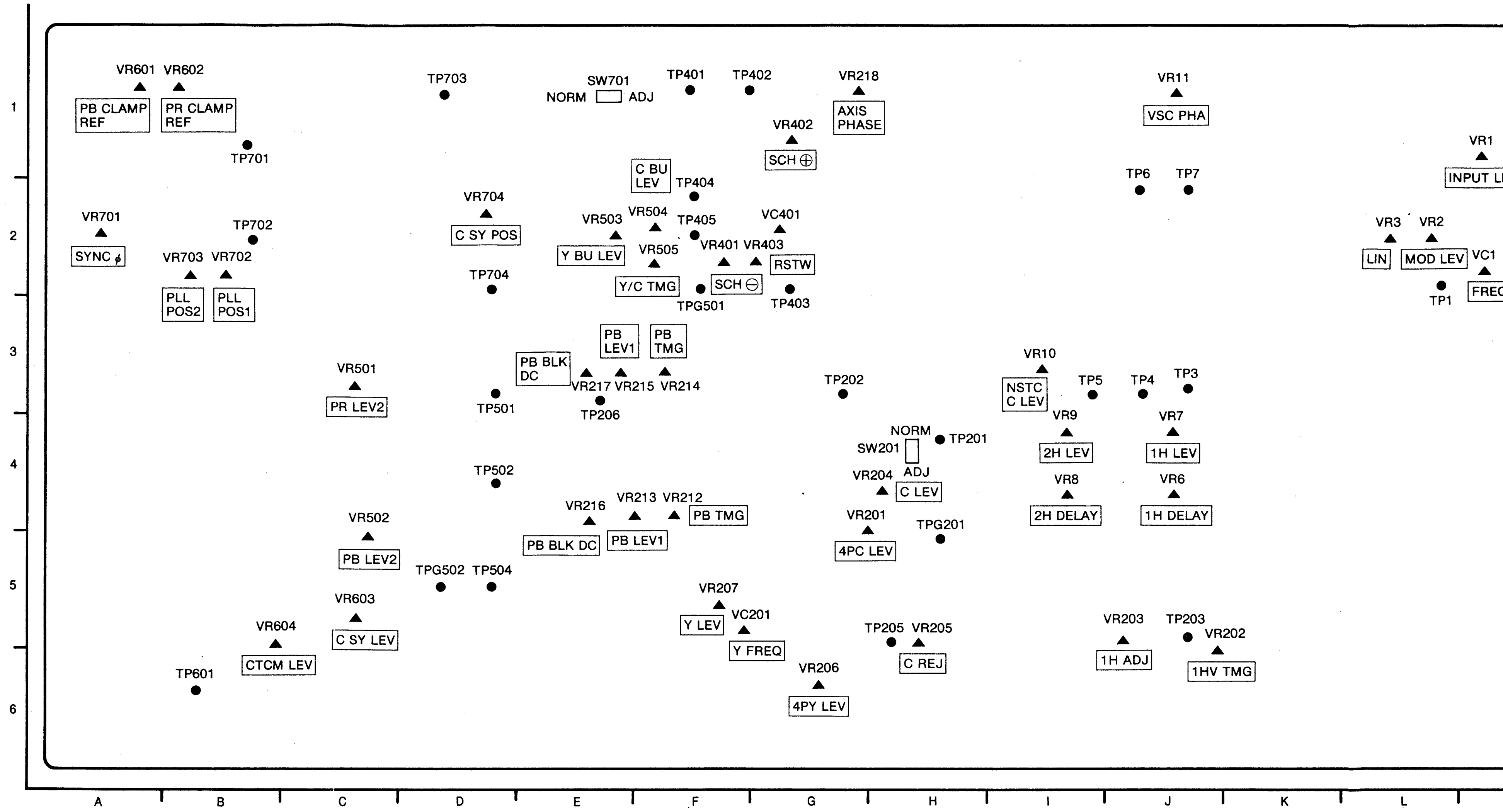

VR601
VR602
PB CLAMP REF
PR CLAMP REF
TP701
TP703
SW701
NORM
ADJ
TP401
TP402
VR218
AXIS PHASE
VR402
SCH ⊕
VR11
VSC PHA
VR1
INPUT L
C BU LEV
TP404
TP6
TP7
VR701
SYNC ϕ
TP702
VR704
C SY POS
VR503
VR504
TP405
VC401
VR3
VR2
LIN
MOD LEV
VC1
FREQ
TP1
VR703
VR702
PLL POS2
PLL POS1
Y BU LEV
VR505
VR401
VR403
RSTW
TP704
Y/C TMG
TPG501
SCH ⊖
TP403
PB LEV1
PB TMG
PB BLK DC
VR217
VR215
VR214
TP206
VR501
PR LEV2
TP501
TP202
VR10
NSTC C LEV
TP5
TP4
TP3
VR9
VR7
NORM
SW201
ADJ
TP201
VR204
C LEV
2H LEV
1H LEV
TP502
VR216
VR213
VR212
PB TMG
VR8
VR6
VR502
PB BLK DC
PB LEV1
VR201
4PC LEV
TPG201
2H DELAY
1H DELAY
PB LEV2
TPG502
TP504
VR207
VR603
Y LEV
VC201
VR604
C SY LEV
Y FREQ
TP205
VR205
VR203
TP203
VR202
CTCM LEV
TP601
VR206
C REJ
1H ADJ
1HV TMG
4PY LEV
1
2
3
4
5
6
A
B
C
D
E
F
G
H
I
J
K
L

BC & SYNC						
	TP212	C-4	TP427	L-3	SW8	D-1
	TP213	D-6	TPG201	B-4	SW201	C-5
	TP214	D-6	TPG401	I-3	SW203	D-1
	TP215	D-6	TPG402	M-5	SW204	C-1
	TP412	M-5	**SWITCH**		SW205	B-5
	TP413	L-6	SW1	F-1	SW401	L-5
	TP416	L-6	SW2	I-3	SW402	J-4
	TP417	M-5	SW3	I-1		
	TP422	J-4	SW4	E-1		
	TP423	K-4	SW5	D-1		
	TP424	M-4	SW6	D-1		
	TP425	M-4	SW7	D-1		
	TP426	L-4				

AU-65H W4 DECODER/CTCM											
ADJUSTMENT		VR201	G-4	VR218	G-1	VR701	A-2	TP203	J-5	TP701	B-1
VC1	M-2	VR202	J-5	VR401	F-2	VR702	B-2	TP204	I-6	TP702	B-2
VC201	F-5	VR203	J-5	VR402	G-1	VR703	B-2	TP205	H-5	TP703	D-1
VC401	G-2	VR204	H-4	VR403	G-2	VR704	D-2	TP206	E-3	TP704	D-2
VR1	M-1	VR205	H-5	VR501	C-3	**TESTPOINT**		TP401	F-1	TPG201	H-5
VR2	L-2	VR206	G-6	VR502	C-4	TP1	L-2	TP402	F-1	TPG501	F-2
VR3	L-2	VR207	F-5	VR503	E-2	TP3	J-3	TP403	G-2	TPG502	D-5
VR6	J-4	VR212	F-4	VR504	F-2	TP4	J-3	TP404	F-2	**SWITCH**	
VR7	J-4	VR213	E-4	VR505	F-2	TP5	I-3	TP405	F-2	SW201	H-4
VR8	I-4	VR214	F-3	VR601	A-1	TP6	J-2	TP501	D-3	SW701	E-1
VR9	I-4	VR215	E-3	VR602	B-1	TP7	J-2	TP502	D-4		
VR10	I-3	VR216	E-4	VR603	C-5	TP201	H-4	TP504	D-5		
VR11	J-1	VR217	E-3	VR604	B-5	TP202	G-3	TP601	B-6		

ADDRESS INFORMATION

❷ LOCATION OF TEST POINTS & CONTROLS (B1, SENC)

P.C. Board Location

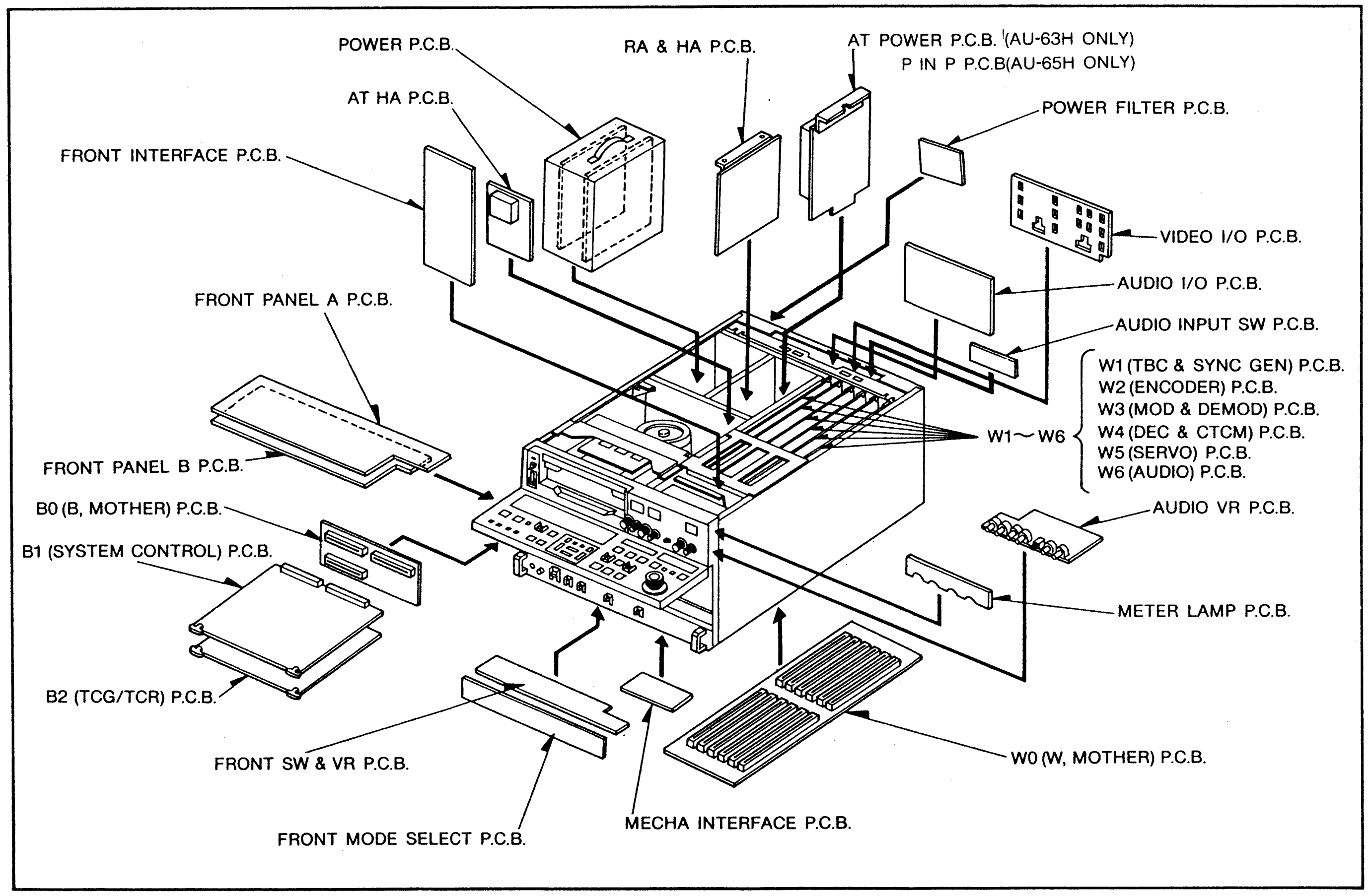
POWER P.C.B.
RA & HA P.C.B.
AT POWER P.C.B. (AU-63H ONLY)
P IN P P.C.B(AU-65H ONLY)
AT HA P.C.B.
POWER FILTER P.C.B.
FRONT INTERFACE P.C.B.
VIDEO I/O P.C.B.
AUDIO I/O P.C.B.
FRONT PANEL A P.C.B.
AUDIO INPUT SW P.C.B.
W1 (TBC & SYNC GEN) P.C.B.
W2 (ENCODER) P.C.B.
W3 (MOD & DEMOD) P.C.B.
W1～W6
W4 (DEC & CTCM) P.C.B.
W5 (SERVO) P.C.B.
W6 (AUDIO) P.C.B.
FRONT PANEL B P.C.B.
B0 (B, MOTHER) P.C.B.
AUDIO VR P.C.B.
B1 (SYSTEM CONTROL) P.C.B.
METER LAMP P.C.B.
B2 (TCG/TCR) P.C.B.
FRONT SW & VR P.C.B.
W0 (W, MOTHER) P.C.B.
MECHA INTERFACE P.C.B.
FRONT MODE SELECT P.C.B.

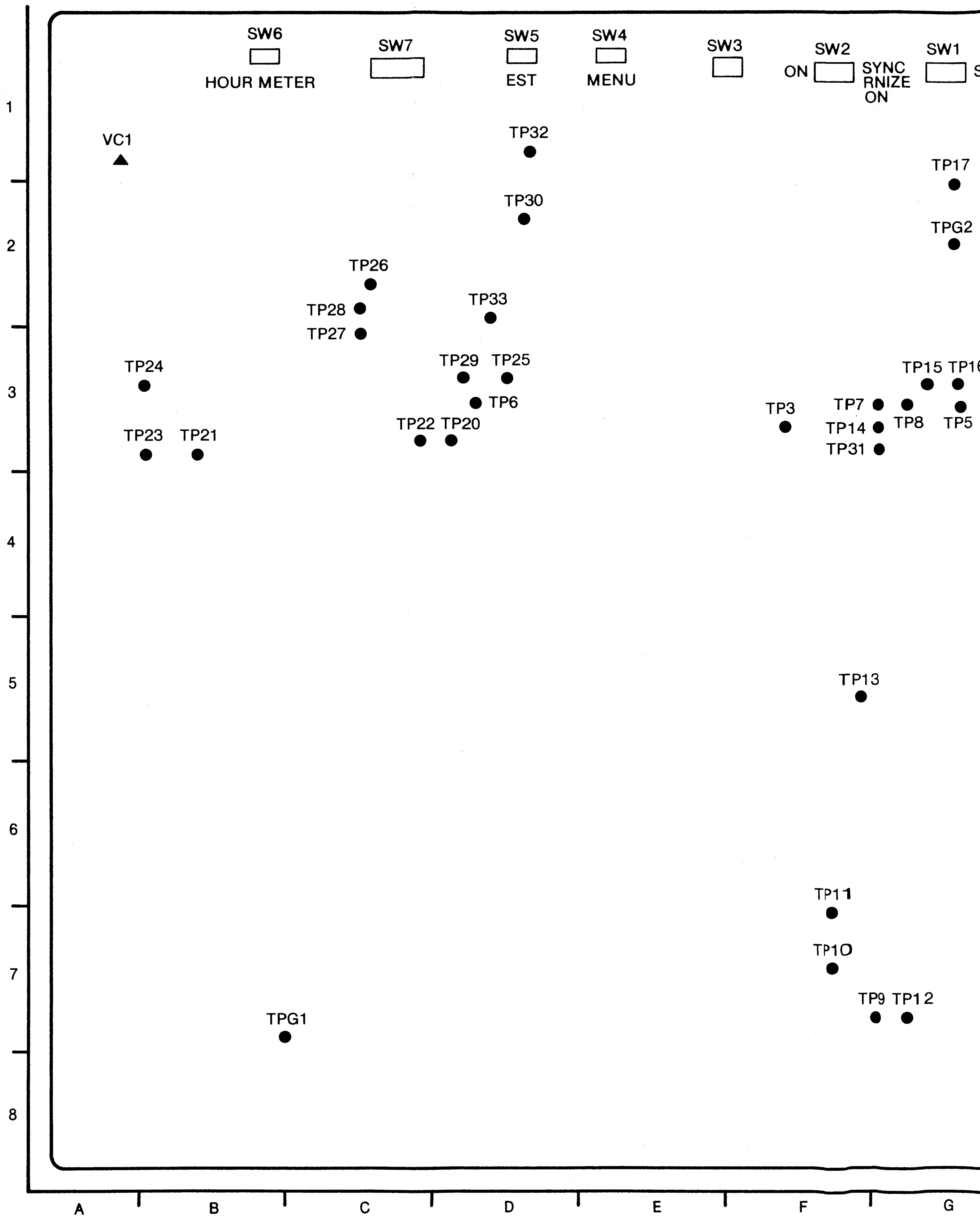
SW6
HOUR METER
SW7
SW5
EST
SW4
MENU
SW3
SW2
ON
SYNC
RNIZE
ON
SW1
VC1
TP32
TP17
TP30
TPG2
TP26
TP28
TP33
TP27
TP24
TP29
TP25
TP15
TP6
TP3
TP7
TP22
TP20
TP14
TP8
TP5
TP23
TP21
TP31
TP13
TP11
TP10
TP9
TP12
TPG1
1
2
3
4
5
6
7
8
A
B
C
D
E
F
G

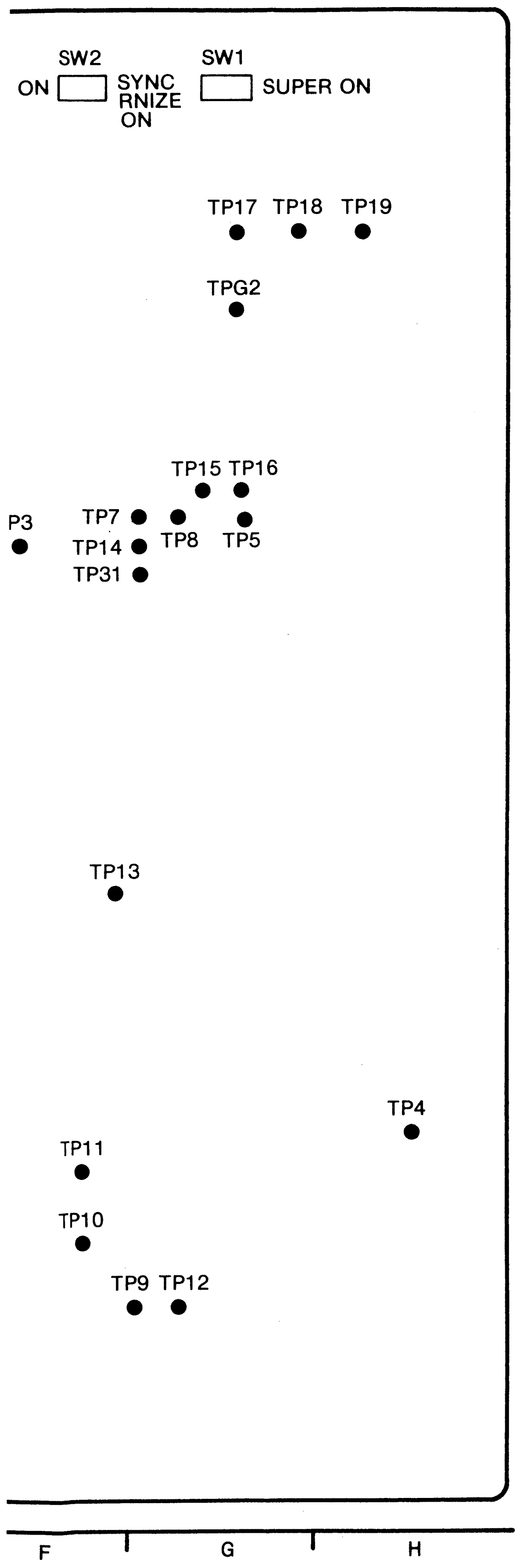

SW2
SW1
ON
SYNC RNIZE ON
SUPER ON
TP17
TP18
TP19
TPG2
TP15
TP16
P3
TP7
TP8
TP5
TP14
TP31
TP13
TP4
TP11
TP10
TP9
TP12
F
G
H

AU-65H B1 SYSTEM CONTROL	
ADJUSTMENT	
VC1	A-1
TESTPOINT	
TP3	F-3
TP4	H-6
TP5	G-3
TP6	D-3
TP7	G-3
TP8	G-3
TP9	G-7
TP10	F-7
TP11	F-7
TP12	G-7
TP13	F-5
TP14	G-3
TP15	G-3
TP16	G-3
TP17	G-2
TP18	G-2
TP19	H-2
TP20	D-3
TP21	B-3
TP22	C-3
TP23	B-3
TP24	B-3
TP25	D-3
TP26	C-2
TP27	C-3
TP28	C-2
TP29	D-3
TP30	D-2
TP31	G-3
TP32	D-1
TP33	D-2
TPG1	C-7
TPG2	G-2
SWITCH	
SW1	G-1
SW2	F-1
SW3	F-1
SW4	E-1
SW5	D-1
SW6	A-1
SW7	C-1

ADDRESS INFORMATION

SENC & P IN P P.C.B.

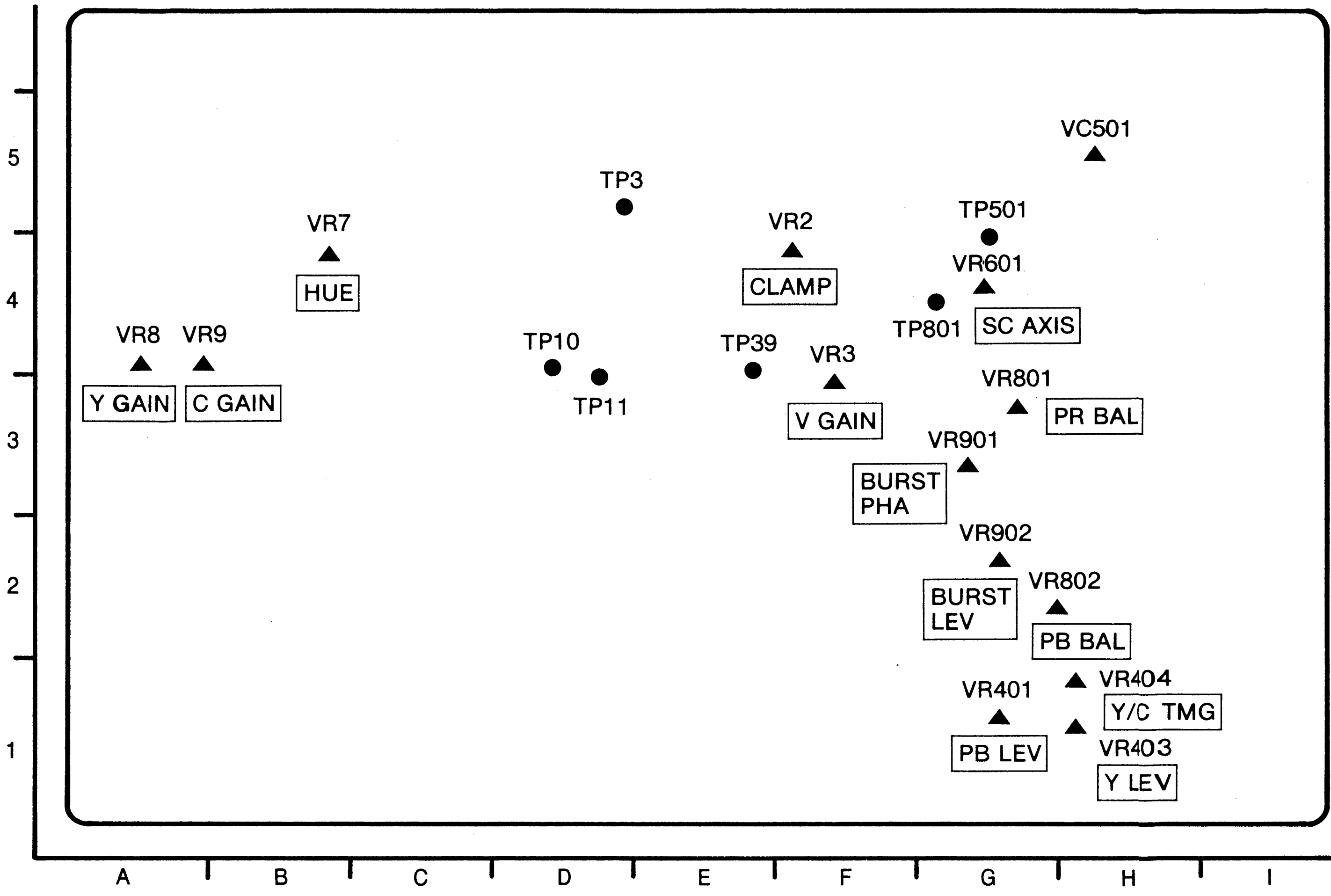

VC501
TP3
VR7
HUE
VR2
CLAMP
TP501
VR601
TP801
SC AXIS
VR8
VR9
Y GAIN
C GAIN
TP10
TP11
TP39
VR3
V GAIN
VR801
PR BAL
VR901
BURST PHA
VR902
BURST LEV
VR802
PB BAL
VR401
PB LEV
VR404
Y/C TMG
VR403
Y LEV
5
4
3
2
1
A
B
C
D
E
F
G
H
I

AU-65H SENC & P IN P	
ADJUSTMENT	
AC501	H-5
VR2	F-4
VR3	F-3
VR7	B-4
VR8	A-4
VR9	A-4
VR401	G-1
VR403	H-1
VR404	H-1
VR601	G-4
VR801	G-3
VR802	H-2
VR901	G-3
VR902	G-2
TESTPOINT	
TP3	E-5
TP10	D-4
TP11	D-4
TP39	E-4
TP501	G-5
TP801	G-4

ADDRESS INFORMATION

❸ LOCATION OF TEST POINTS & CONTROLS (FRONT A,B)
(VIDEO I/O)

P.C. Board Location

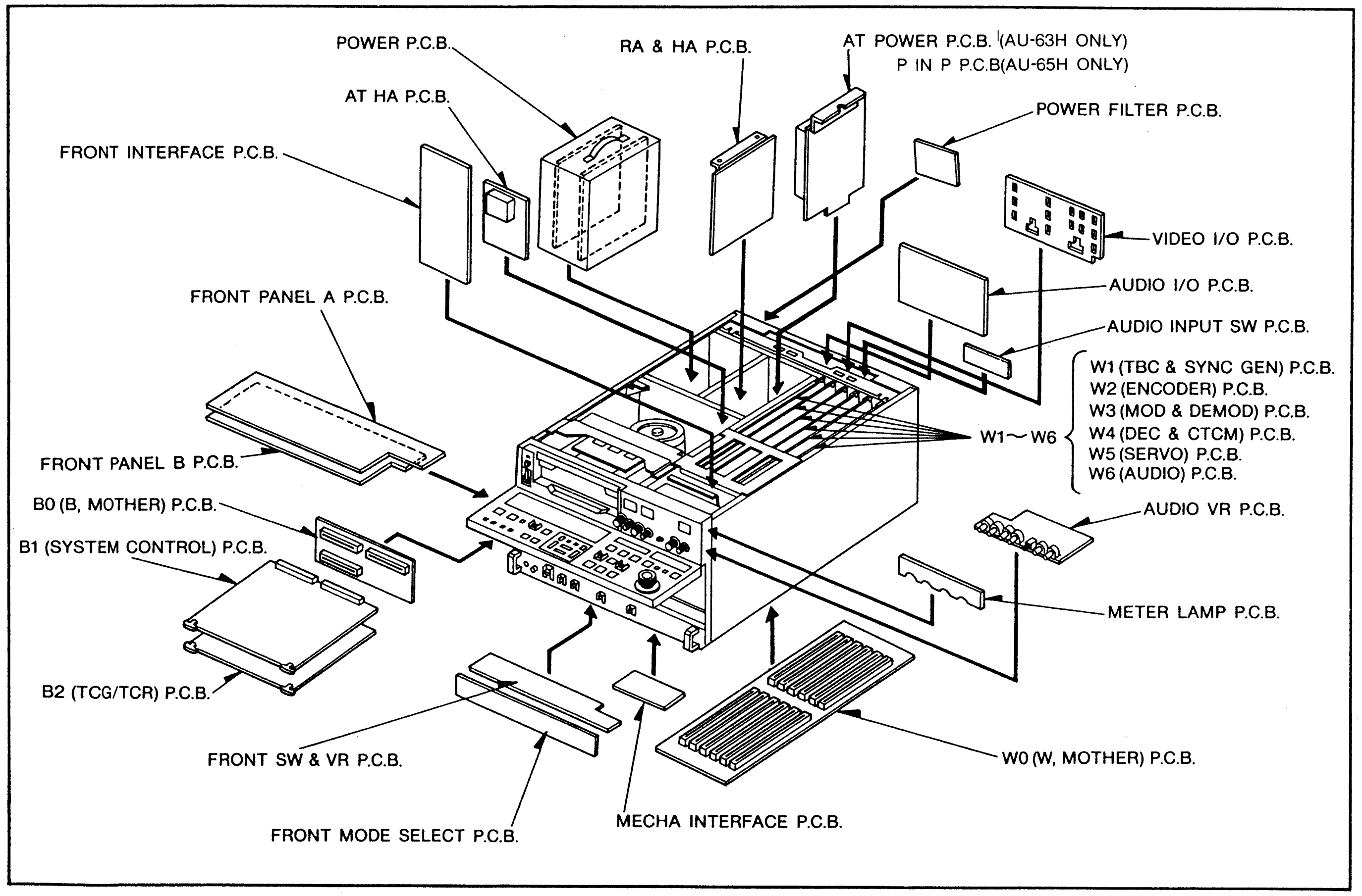
POWER P.C.B.
RA & HA P.C.B.
AT POWER P.C.B. (AU-63H ONLY)
P IN P P.C.B(AU-65H ONLY)
AT HA P.C.B.
POWER FILTER P.C.B.
FRONT INTERFACE P.C.B.
VIDEO I/O P.C.B.
AUDIO I/O P.C.B.
FRONT PANEL A P.C.B.
AUDIO INPUT SW P.C.B.
W1 (TBC & SYNC GEN) P.C.B.
W2 (ENCODER) P.C.B.
W3 (MOD & DEMOD) P.C.B.
W1～W6
W4 (DEC & CTCM) P.C.B.
W5 (SERVO) P.C.B.
W6 (AUDIO) P.C.B.
FRONT PANEL B P.C.B.
B0 (B, MOTHER) P.C.B.
AUDIO VR P.C.B.
B1 (SYSTEM CONTROL) P.C.B.
METER LAMP P.C.B.
B2 (TCG/TCR) P.C.B.
FRONT SW & VR P.C.B.
W0 (W, MOTHER) P.C.B.
MECHA INTERFACE P.C.B.
FRONT MODE SELECT P.C.B.

FRONT PANEL A P.C.B

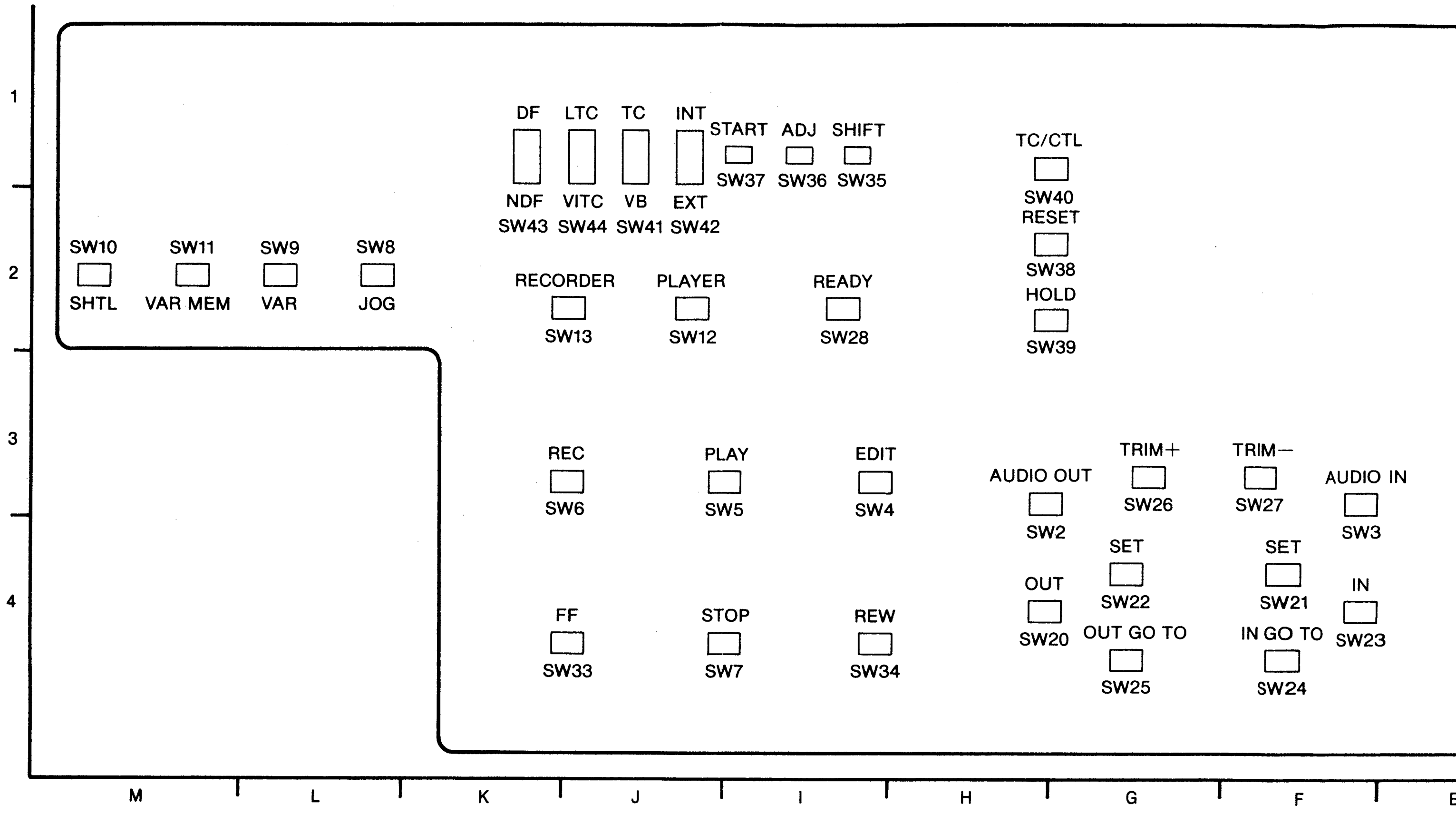
1
2
3
4
DF
LTC
TC
INT
START
ADJ
SHIFT
SW37
SW36
SW35
NDF
VITC
VB
EXT
SW43
SW44
SW41
SW42
TC/CTL
SW40
RESET
SW38
HOLD
SW39
SW10
SW11
SW9
SW8
SHTL
VAR MEM
VAR
JOG
RECORDER
PLAYER
READY
SW13
SW12
SW28
REC
PLAY
EDIT
SW6
SW5
SW4
AUDIO OUT
SW2
TRIM+
SW26
TRIM−
SW27
AUDIO IN
SW3
SET
SW22
SET
SW21
OUT
SW20
OUT GO TO
SW25
IN
SW23
IN GO TO
SW24
FF
SW33
STOP
SW7
REW
SW34
M
L
K
J
I
H
G
F
E

FRONT PANEL B P.C.B

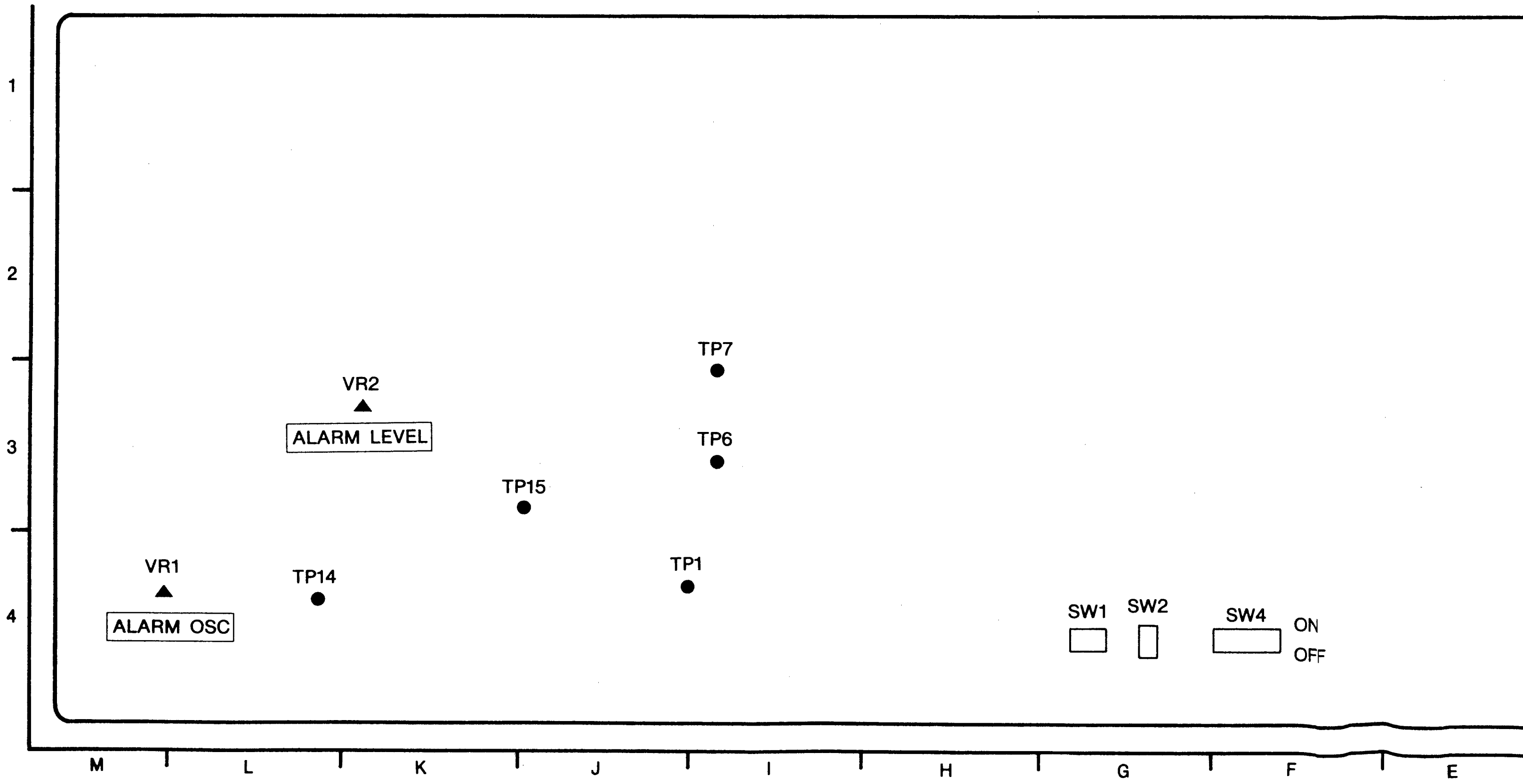
1
2
3
4
TP7
VR2
ALARM LEVEL
TP6
TP15
VR1
TP14
TP1
ALARM OSC
SW1
SW2
SW4
ON
OFF
M
L
K
J
I
H
G
F
E

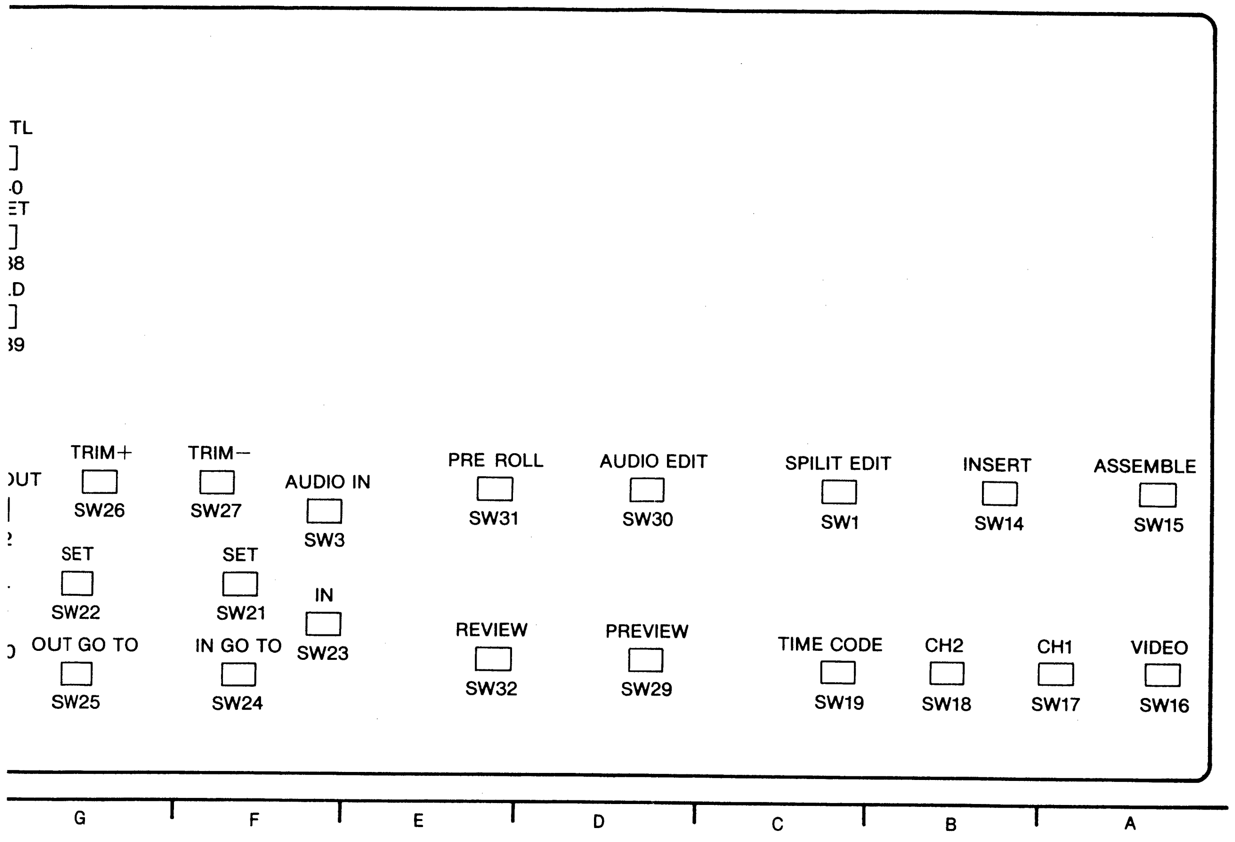
TRIM+
SW26
TRIM−
SW27
AUDIO IN
SW3
PRE ROLL
SW31
AUDIO EDIT
SW30
SPILIT EDIT
SW1
INSERT
SW14
ASSEMBLE
SW15
SET
SW22
SET
SW21
IN
SW23
OUT GO TO
SW25
IN GO TO
SW24
REVIEW
SW32
PREVIEW
SW29
TIME CODE
SW19
CH2
SW18
CH1
SW17
VIDEO
SW16
G
F
E
D
C
B
A

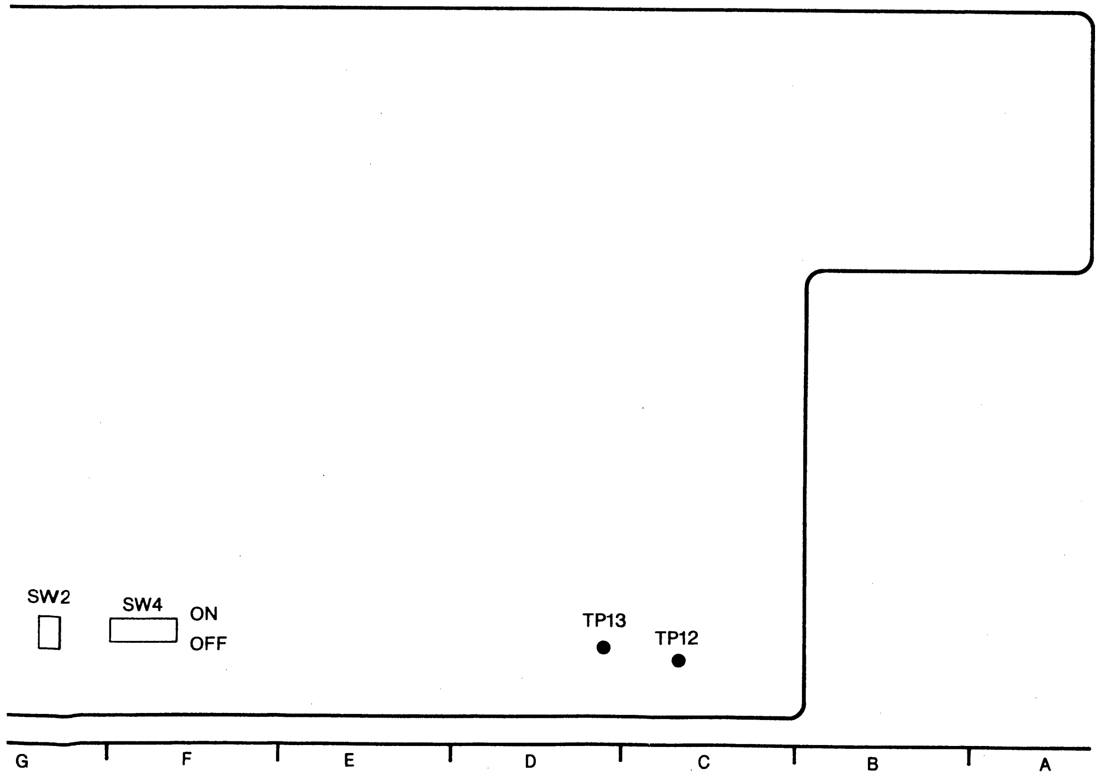
SW2
SW4
ON
OFF
TP13
TP12
G
F
E
D
C
B
A

AU-65H FRONT PANEL A	
SWITCH	
SW1	C-3
SW2	H-3
SW3	F-3
SW4	I-3
SW5	J-3
SW6	K-3
SW7	J-4
SW8	L-2
SW9	L-2
SW10	M-2
SW11	M-2
SW12	J-2
SW13	K-2
SW14	B-3
SW15	A-3
SW16	A-4
SW17	A-4
SW18	B-4
SW19	C-4
SW20	H-4
SW21	F-4
SW22	G-4
SW23	F-4
SW24	F-4
SW25	G-4
SW26	G-3
SW27	F-3
SW28	I-2
SW29	D-4
SW30	D-3
SW31	E-3
SW32	E-4
SW33	J-4
SW34	I-4
SW35	I-1
SW36	I-1
SW37	I-1
SW38	H-2
SW39	H-2
SW40	H-1
SW41	J-1
SW42	J-1
SW43	K-1
SW44	J-1

ADDRESS INFORMATION

AU-65H FRONT PANEL B	
ADJUSTMENT	
VR1	M-4
VR2	L-3
TESTPOINT	
TP1	J-4
TP6	J-3
TP7	J-2
TP12	C-4
TP13	D-4
TP14	L-4
TP15	K-3
SWITCH	
SW1	G-4
SW2	G-4
SW4	F-4

ADDRESS INFORMATION

VIDEO I/O P.C.B

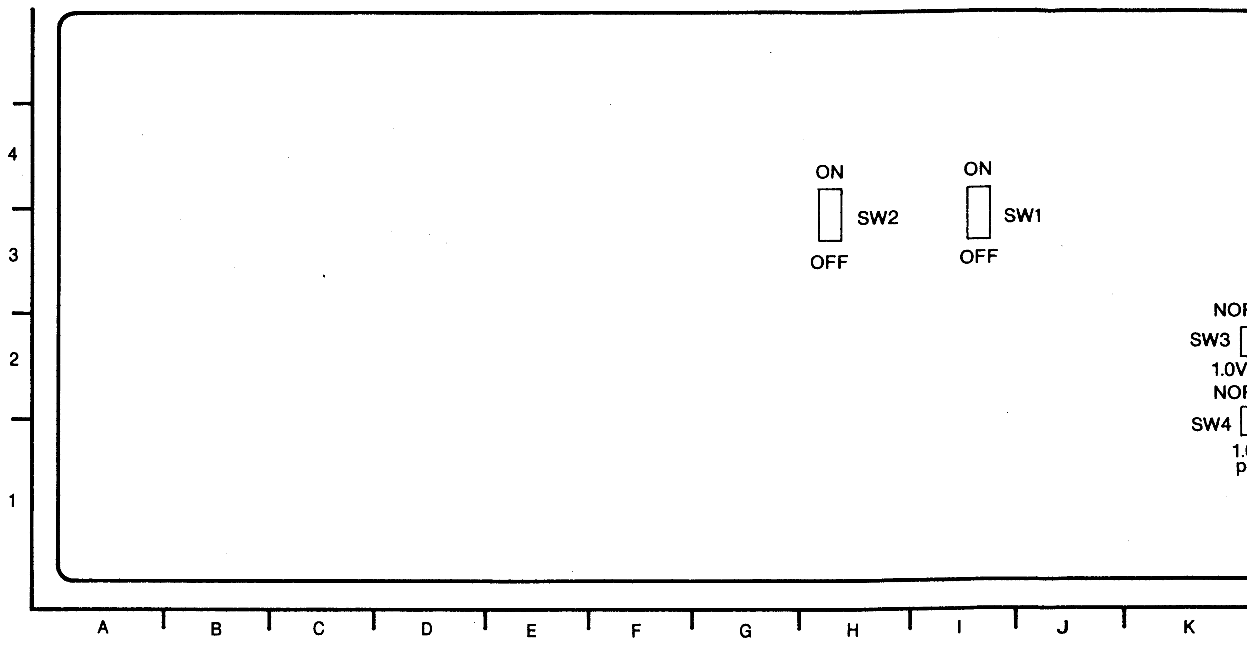
ON
SW2
OFF
ON
SW1
OFF
SW3
1.0V
SW4
4
3
2
1
A
B
C
D
E
F
G
H
I
J
K

AU-65H VIDEO I/O	
SWITCH	
SW1	I-4
SW2	G-4
SW3	K-3
SW4	K-2

ADDRESS INFORMATION

OVER ALL BLOCK DIAGRAM [FOR AU-65H]

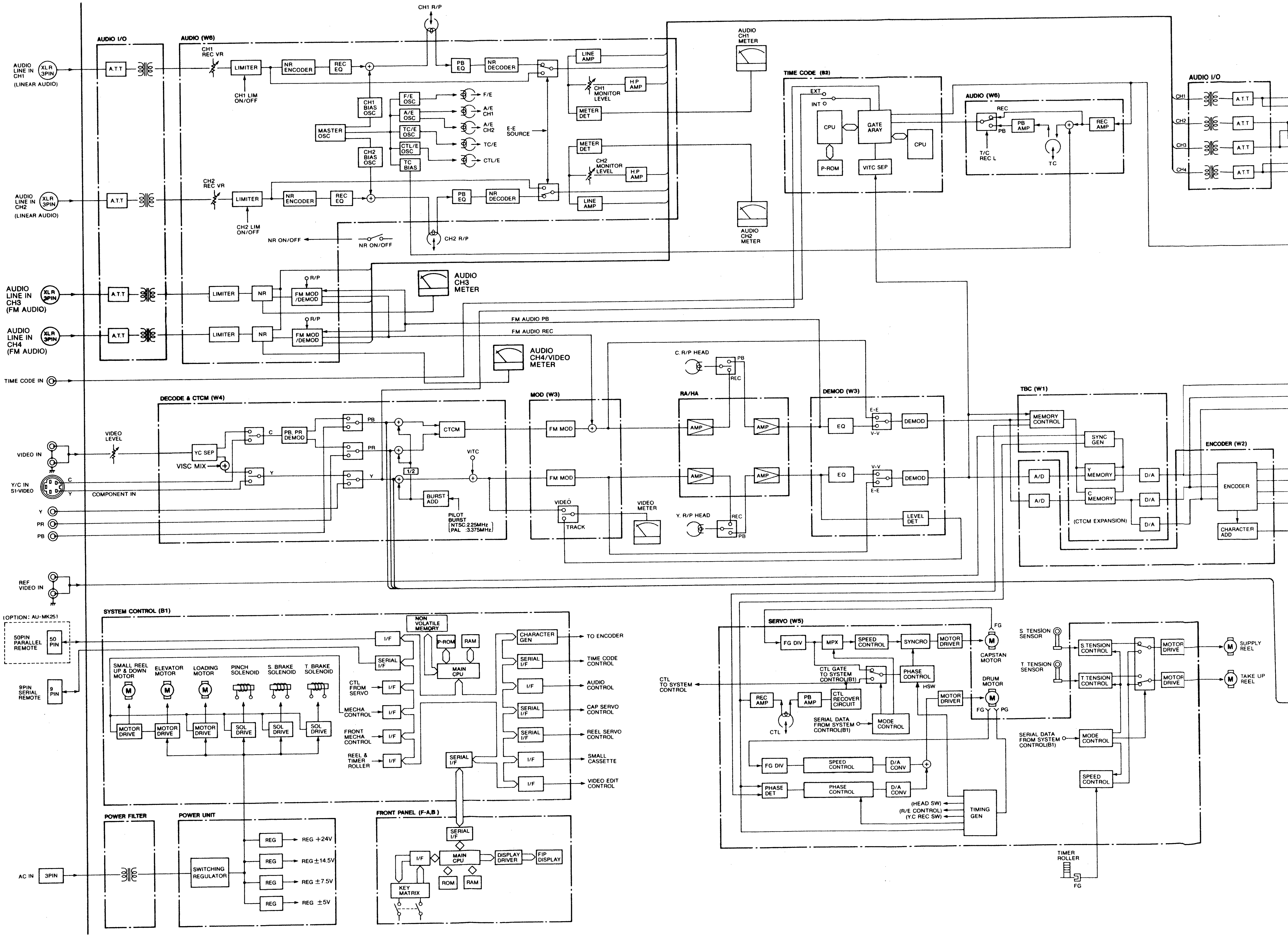

CH1 R/P
AUDIO I/O
AUDIO (W6)
CH1 REC VR
LIMITER
NR ENCODER
REC EQ
PB EQ
NR DECODER
LINE AMP
AUDIO CH1 METER
AUDIO LINE IN CH1 (LINEAR AUDIO)
XLR 3PIN
A.T.T
CH1 LIM ON/OFF
CH1 BIAS OSC
F/E OSC
A/E OSC
TC/E OSC
CTL/E OSC
TC BIAS
MASTER OSC
CH2 BIAS OSC
F/E
A/E CH1
A/E CH2
TC/E
CTL/E
E-E SOURCE
CH1 MONITOR LEVEL
HP AMP
METER DET
CH2 MONITOR LEVEL
CH2 REC VR
AUDIO LINE IN CH2 (LINEAR AUDIO)
CH2 LIM ON/OFF
NR ON/OFF
CH2 R/P
AUDIO CH2 METER
TIME CODE (B2)
EXT
INT
CPU
GATE ARAY
P-ROM
VITC SEP
AUDIO (W6)
REC
PB
PB AMP
REC AMP
T/C REC L
TC
CH1
CH2
CH3
CH4
AUDIO LINE IN CH3 (FM AUDIO)
AUDIO LINE IN CH4 (FM AUDIO)
NR
R/P
FM MOD /DEMOD
AUDIO CH3 METER
FM AUDIO PB
FM AUDIO REC
AUDIO CH4/VIDEO METER
TIME CODE IN
DECODE & CTCM (W4)
VIDEO LEVEL
VIDEO IN
YC SEP
VISC MIX
C
Y
PB, PR DEMOD
PB
PR
CTCM
1/2
VITC
BURST ADD
PILOT BURST [NTSC:2.25MHz PAL :3.375MHz]
Y/C IN S1-VIDEO
COMPONENT IN
Y
PR
PB
MOD (W3)
FM MOD
VIDEO
TRACK
VIDEO METER
C. R/P HEAD
RA/HA
AMP
Y. R/P HEAD
DEMOD (W3)
E-E
V-V
EQ
DEMOD
LEVEL DET
TBC (W1)
MEMORY CONTROL
SYNC GEN
A/D
Y MEMORY
C MEMORY
(CTCM EXPANSION)
D/A
ENCODER (W2)
ENCODER
CHARACTER ADD
REF VIDEO IN
(OPTION : AU-MK251
50PIN PARALLEL REMOTE
50 PIN
9PIN SERIAL REMOTE
9 PIN
SYSTEM CONTROL (B1)
NON VOLATILE MEMORY
P-ROM
RAM
MAIN CPU
I/F
SERIAL I/F
CHARACTER GEN
TO ENCODER
TIME CODE CONTROL
AUDIO CONTROL
CAP SERVO CONTROL
REEL SERVO CONTROL
SMALL CASSETTE
VIDEO EDIT CONTROL
SMALL REEL UP & DOWN MOTOR
ELEVATOR MOTOR
LOADING MOTOR
PINCH SOLENOID
S. BRAKE SOLENOID
T. BRAKE SOLENOID
M
MOTOR DRIVE
SOL DRIVE
CTL FROM SERVO
MECHA CONTROL
FRONT MECHA CONTROL
REEL & TIMER ROLLER
POWER FILTER
POWER UNIT
AC IN
3PIN
SWITCHING REGULATOR
REG
REG +24V
REG ±14.5V
REG ±7.5V
REG ±5V
FRONT PANEL (F-A,B)
KEY MATRIX
DISPLAY DRIVER
FIP DISPLAY
ROM
SERVO (W5)
FG DIV
MPX
SPEED CONTROL
SYNCRO
MOTOR DRIVER
FG
CAPSTAN MOTOR
CTL GATE TO SYSTEM CONTROL(B1)
PHASE CONTROL
HSW
DRUM MOTOR
PG
CTL TO SYSTEM CONTROL
REC AMP
PB AMP
CTL RECOVER CIRCUIT
CTL
SERIAL DATA FROM SYSTEM CONTROL(B1)
MODE CONTROL
D/A CONV
PHASE DET
TIMING GEN
(HEAD SW)
(R/E CONTROL)
(Y/C REC SW)
S. TENSION SENSOR
T. TENSION SENSOR
S.TENSION CONTROL
T.TENSION CONTROL
MOTOR DRIVE
SUPPLY REEL
TAKE UP REEL
TIMER ROLLER

AGRAM [FOR AU-65H]

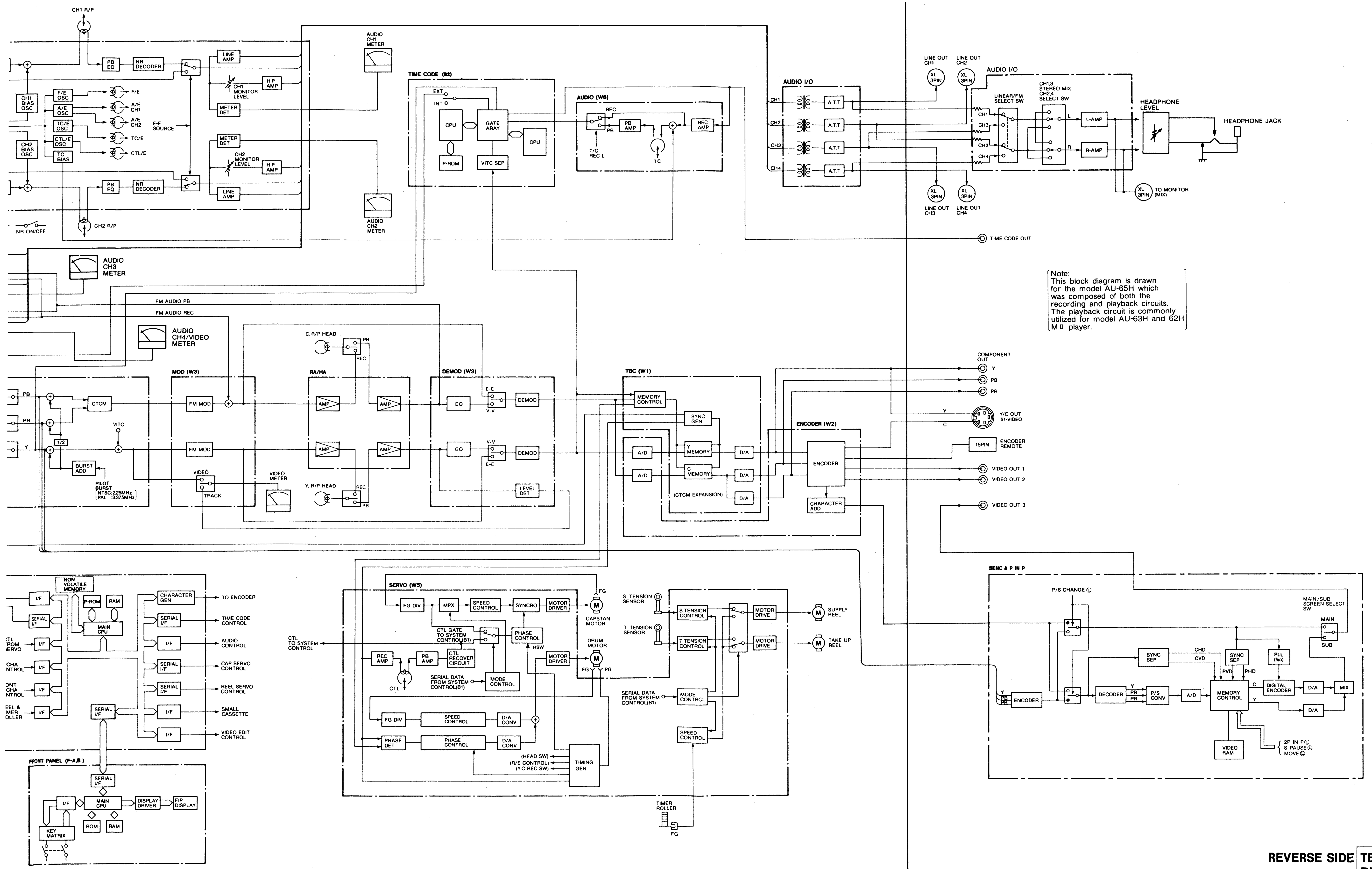
CH1 R/P
PB EQ
NR DECODER
LINE AMP
H.P AMP
CH1 MONITOR LEVEL
METER DET
CH1 BIAS OSC
F/E OSC
A/E OSC
TC/E OSC
CTL/E OSC
TC BIAS
CH2 BIAS OSC
F/E
A/E CH1
A/E CH2
TC/E
CTL/E
E-E SOURCE
CH2 MONITOR LEVEL
CH2 R/P
NR ON/OFF
AUDIO CH1 METER
AUDIO CH2 METER
TIME CODE (B2)
EXT
INT
CPU
GATE ARAY
P-ROM
VITC SEP
AUDIO (W6)
REC
PB
PB AMP
REC AMP
T/C REC L
TC
AUDIO I/O
CH1
CH2
CH3
CH4
A.T.T
LINE OUT CH1
LINE OUT CH2
LINE OUT CH3
LINE OUT CH4
XL 3PIN
LINEAR/FM SELECT SW
CH1,3 STEREO MIX CH2,4 SELECT SW
L-AMP
R-AMP
L
R
HEADPHONE LEVEL
HEADPHONE JACK
TO MONITOR (MIX)
TIME CODE OUT
AUDIO CH3 METER
FM AUDIO PB
FM AUDIO REC
AUDIO CH4/VIDEO METER
C. R/P HEAD
Y. R/P HEAD
MOD (W3)
RA/HA
DEMOD (W3)
PB
PR
Y
CTCM
VITC
1/2
BURST ADD
PILOT BURST (NTSC:2.25MHz PAL :3.375MHz)
FM MOD
VIDEO
TRACK
VIDEO METER
AMP
EQ
E-E
V-V
DEMOD
LEVEL DET
TBC (W1)
MEMORY CONTROL
SYNC GEN
A/D
Y MEMORY
C MEMORY
D/A
(CTCM EXPANSION)
ENCODER (W2)
ENCODER
CHARACTER ADD
COMPONENT OUT
Y/C OUT S1-VIDEO
15PIN
ENCODER REMOTE
VIDEO OUT 1
VIDEO OUT 2
VIDEO OUT 3
NON VOLATILE MEMORY
I/F
SERIAL I/F
P-ROM
RAM
MAIN CPU
CHARACTER GEN
TO ENCODER
TIME CODE CONTROL
AUDIO CONTROL
CAP SERVO CONTROL
REEL SERVO CONTROL
SMALL CASSETTE
VIDEO EDIT CONTROL
CTL
ROM
SERVO
CHA
NTROL
ONT
EEL &
MER
OLLER
FRONT PANEL (F-A,B)
DISPLAY DRIVER
FIP DISPLAY
ROM
KEY MATRIX
CTL TO SYSTEM CONTROL
SERVO (W5)
FG DIV
MPX
SPEED CONTROL
SYNCRO
MOTOR DRIVER
CAPSTAN MOTOR
FG
CTL GATE TO SYSTEM CONTROL(B1)
PHASE CONTROL
HSW
DRUM MOTOR
PG
REC AMP
PB AMP
CTL RECOVER CIRCUIT
SERIAL DATA FROM SYSTEM CONTROL(B1)
MODE CONTROL
D/A CONV
PHASE DET
(HEAD SW)
(R/E CONTROL)
(Y.C REC SW)
TIMING GEN
S. TENSION SENSOR
T. TENSION SENSOR
S.TENSION CONTROL
T.TENSION CONTROL
MOTOR DRIVE
SUPPLY REEL
TAKE UP REEL
SPEED CONTROL
TIMER ROLLER
SENC & P IN P
P/S CHANGE Ⓛ
MAIN/SUB SCREEN SELECT SW
MAIN
SUB
SYNC SEP
CHD
CVD
PVD
PHD
PLL (fsc)
C
DIGITAL ENCODER
MIX
DECODER
P/S CONV
MEMORY CONTROL
VIDEO RAM
2P IN PⓁ
S PAUSEⓁ
MOVEⓁ

Note:
This block diagram is drawn for the model AU-65H which was composed of both the recording and playback circuits. The playback circuit is commonly utilized for model AU-63H and 62H MⅡ player.

W1(TBC & SYNC GEN) BLOCK DIAGRAM 1/3 (FIELD TBC SECTION) [FOR NTSC]

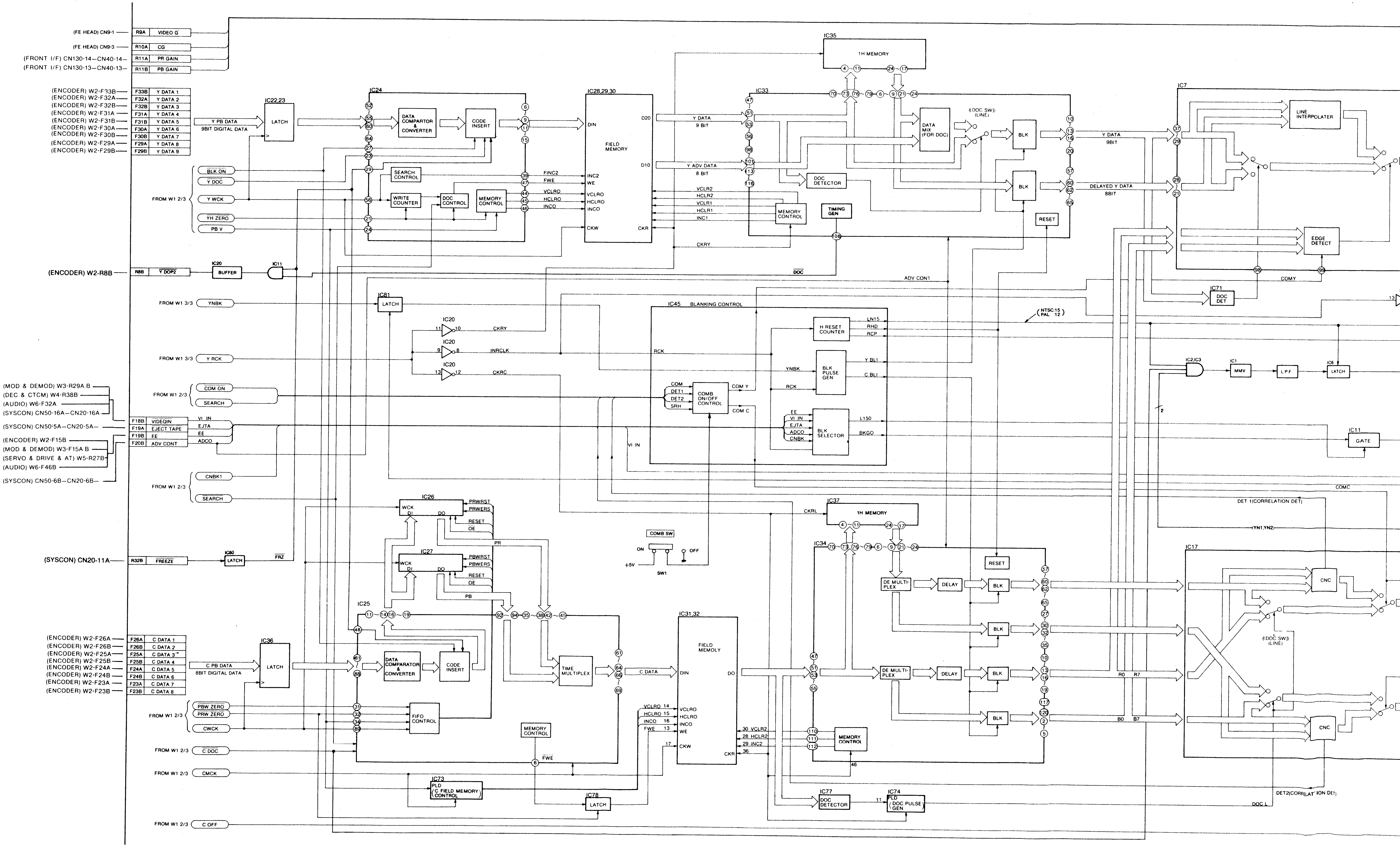

(FE HEAD) CN9-1
R9A VIDEO G
(FE HEAD) CN9-3
R10A CG
(FRONT I/F) CN130-14—CN40-14—
R11A PR GAIN
(FRONT I/F) CN130-13—CN40-13—
R11B PB GAIN
(ENCODER) W2-F33B
F33B Y DATA 1
(ENCODER) W2-F32A
F32A Y DATA 2
(ENCODER) W2-F32B
F32B Y DATA 3
(ENCODER) W2-F31A
F31A Y DATA 4
(ENCODER) W2-F31B
F31B Y DATA 5
(ENCODER) W2-F30A
F30A Y DATA 6
(ENCODER) W2-F30B
F30B Y DATA 7
(ENCODER) W2-F29A
F29A Y DATA 8
(ENCODER) W2-F29B
F29B Y DATA 9
Y PB DATA
9BIT DIGITAL DATA
IC22,23
LATCH
FROM W1 2/3
BLK ON
Y DOC
Y WCK
YH ZERO
PB V
IC24
DATA COMPARTOR & CONVERTER
CODE INSERT
SEARCH CONTROL
WRITE COUNTER
DOC CONTROL
MEMORY CONTROL
FINC2
FWE
VCLRO
HCLRO
INCO
IC28,29,30
DIN
D20
D10
FIELD MEMORY
INC2
WE
VCLRO
HCLRO
INCO
CKW
CKR
Y DATA
9 BIT
Y ADV DATA
8 BIT
VCLR2
HCLR2
VCLR1
HCLR1
INC1
CKRY
IC35
1H MEMORY
IC33
DATA MIX (FOR DOC)
(DOC SW) (LINE)
BLK
DOC DETECTOR
MEMORY CONTROL
TIMING GEN
RESET
Y DATA
9BIT
DELAYED Y DATA
8BIT
IC7
LINE INTERPOLATER
EDGE DETECT
COMY
(ENCODER) W2-R8B
R8B Y DOP2
IC20
BUFFER
IC11
DOC
ADV CONT
IC71
DOC DET
FROM W1 3/3
YNBK
IC81
LATCH
IC20
CKRY
INRCLK
CKRC
(NTSC:15 PAL :12)
IC45 BLANKING CONTROL
H RESET COUNTER
LN15
RHD
RCP
FROM W1 3/3
Y RCK
RCK
YNBK
BLK PULSE GEN
Y BLI
C BLI
RCK
IC2/IC3
IC1
MMV
LPF
IC6
LATCH
(MOD & DEMOD) W3-R29A,B
(DEC & CTCM) W4-R38B
(AUDIO) W6-F32A
(SYSCON) CN50-16A—CN20-16A
FROM W1 2/3
COM ON
SEARCH
COM
DET1
DET2
SRH
COMB ON/OFF CONTROL
COM Y
COM C
F18B VIDEOIN
(SYSCON) CN50-5A—CN20-5A—
F19A EJECT TAPE
F19B FE
(ENCODER) W2-F15B
F20B ADV CONT
(MOD & DEMOD) W3-F15A,B
(SERVO & DRIVE & AT) W5-R27B
(AUDIO) W6-F46B
(SYSCON) CN50-6B—CN20-6B—
VI IN
EJTA
EE
ADCO
VI IN
EE
VI IN
EJTA
ADCO
CNBK
BLK SELECTOR
L150
BKGO
IC11
GATE
2
FROM W1 2/3
CNBK1
SEARCH
COMC
DET 1(CORRELATION DET)
IC26
WCK
DI
DO
PRWRST
PRWERS
RESET
OE
PR
IC27
WCK
DI
DO
PBWRST
PBWERS
RESET
OE
PB
(SYSCON) CN20-11A
R32B FREEZE
IC80
LATCH
FRZ
COMB SW
ON
OFF
+5V
SW1
CKRL
IC37
1H MEMORY
(YN1,YN2)
IC34
RESET
DE MULTI-PLEX
DELAY
BLK
IC17
CNC
(DOC SW) (LINE)
IC25
(ENCODER) W2-F26A
F26A C DATA 1
(ENCODER) W2-F26B
F26B C DATA 2
(ENCODER) W2-F25A
F25A C DATA 3
(ENCODER) W2-F25B
F25B C DATA 4
(ENCODER) W2-F24A
F24A C DATA 5
(ENCODER) W2-F24B
F24B C DATA 6
(ENCODER) W2-F23A
F23A C DATA 7
(ENCODER) W2-F23B
F23B C DATA 8
C PB DATA
8BIT DIGITAL DATA
IC36
LATCH
DATA COMPARATOR & CONVERTER
CODE INSERT
TIME MULTIPLEX
C DATA
IC31,32
FIELD MEMOLY
DIN
DO
VCLRO 14
HCLRO 15
INCO 16
FWE 13
VCLRO
HCLRO
INCO
WE
17
CKW
CKR
30 VCLR2
28 HCLR2
29 INC2
36
MEMORY CONTROL
46
DE MULTI-PLEX
DELAY
BLK
R0
R7
B0
B7
FROM W1 2/3
PBW ZERO
PRW ZERO
CWCK
FIFO CONTROL
MEMORY CONTROL
FWE
FROM W1 2/3
C DOC
FROM W1 2/3
CMCK
IC73
PLD
(C FIELD MEMORY CONTROL)
IC78
LATCH
IC77
DOC DETECTOR
11
IC74
PLD
(DOC PULSE GEN)
DET2(CORRELATION DET)
DOC L
FROM W1 2/3
C OFF

I/3 (FIELD TBC SECTION) [FOR NTSC]

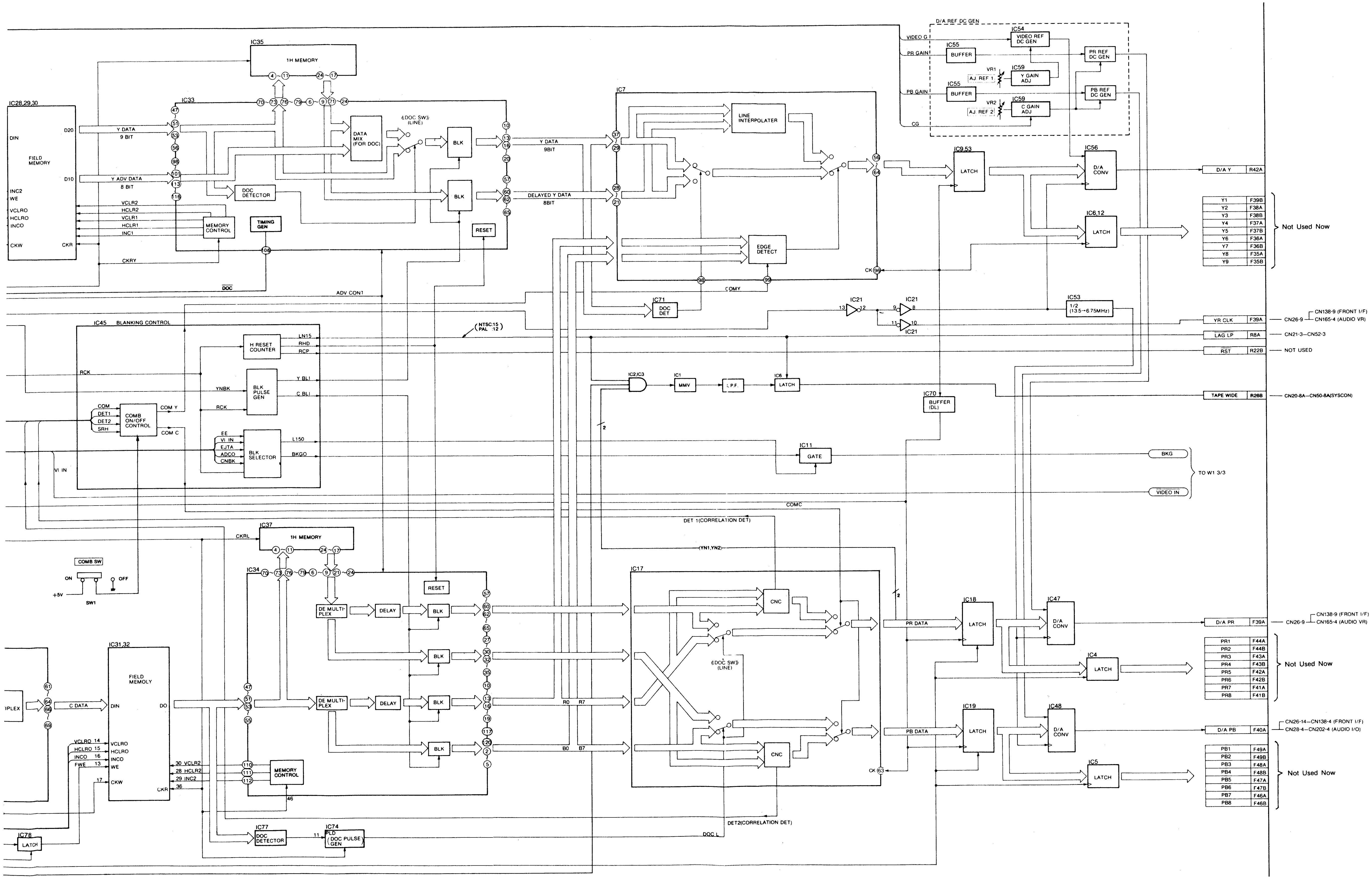

IC28,29,30
FIELD MEMORY
DIN
D20
D10
INC2
WE
VCLRO
HCLRO
INCO
CKW
CKR
Y DATA
9 BIT
Y ADV DATA
8 BIT
VCLR2
HCLR2
VCLR1
HCLR1
INC1
CKRY
DOC
IC35
1H MEMORY
IC33
MEMORY CONTROL
TIMING GEN
DOC DETECTOR
DATA MIX (FOR DOC)
《DOC SW》 (LINE)
BLK
RESET
Y DATA
9BIT
DELAYED Y DATA
8BIT
ADV CONT
IC7
LINE INTERPOLATER
EDGE DETECT
CK
COMY
IC71
DOC DET
D/A REF DC GEN
VIDEO G
PR GAIN
PB GAIN
CG
IC54
VIDEO REF DC GEN
IC55
BUFFER
VR1
AJ REF 1
IC59
Y GAIN ADJ
VR2
AJ REF 2
C GAIN ADJ
PR REF DC GEN
PB REF DC GEN
IC9,53
LATCH
IC56
D/A CONV
IC6,12
LATCH
IC53
1/2 (13.5→6.75MHz)
IC21
13
12
9
8
11
10
D/A Y
R42A
Y1
F39B
Y2
F38A
Y3
F38B
Y4
F37A
Y5
F37B
Y6
F36A
Y7
F36B
Y8
F35A
Y9
F35B
Not Used Now
YR CLK
F39A
CN26-9
CN138-9 (FRONT I/F)
CN165-4 (AUDIO VR)
LAG LP
R8A
CN21-3—CN52-3
RST
R22B
NOT USED
TAPE WIDE
R26B
CN20-8A—CN50-8A(SYSCON)
IC45 BLANKING CONTROL
H RESET COUNTER
LN15
RHD
RCP
BLK PULSE GEN
Y BLI
C BLI
YNBK
RCK
COMB ON/OFF CONTROL
COM
DET1
DET2
SRH
COM Y
COM C
BLK SELECTOR
EE
VI IN
EJTA
ADCO
CNBK
L150
BKGO
VI IN
(NTSC:15 / PAL :12)
IC2,IC3
IC1
MMV
L.P.F.
IC6
LATCH
IC70
BUFFER (DL)
IC11
GATE
BKG
VIDEO IN
TO W1 3/3
COMC
DET 1(CORRELATION DET)
(YN1,YN2)
2
COMB SW
ON
OFF
+5V
SW1
IC37
1H MEMORY
CKRL
IC34
RESET
DE MULTI-PLEX
DELAY
BLK
IC31,32
FIELD MEMOLY
DIN
DO
VCLRO
HCLRO
INCO
WE
CKW
CKR
VCLRO 14
HCLRO 15
INCO 16
FWE 13
17
30 VCLR2
28 HCLR2
29 INC2
36
MEMORY CONTROL
46
C DATA
IPLEX
IC78
LATCH
IC77
DOC DETECTOR
IC74
PLD (DOC PULSE GEN)
11
DOC L
DET2(CORRELATION DET)
R0
R7
B0
B7
IC17
CNC
《DOC SW》 (LINE)
CK
IC18
LATCH
PR DATA
IC19
LATCH
PB DATA
IC47
D/A CONV
IC4
LATCH
IC48
D/A CONV
IC5
LATCH
D/A PR
F39A
CN26-9
CN138-9 (FRONT I/F)
CN165-4 (AUDIO VR)
PR1
F44A
PR2
F44B
PR3
F43A
PR4
F43B
PR5
F42A
PR6
F42B
PR7
F41A
PR8
F41B
Not Used Now
D/A PB
F40A
CN26-14—CN138-4 (FRONT I/F)
CN28-4—CN202-4 (AUDIO I/O)
PB1
F49A
PB2
F49B
PB3
F48A
PB4
F48B
PB5
F47A
PB6
F47B
PB7
F46A
PB8
F46B
Not Used Now

W1(TBC & SYNC GEN) BLOCK DIAGRAM 1/3(FIELD TBC SECTION)[FOR PAL]

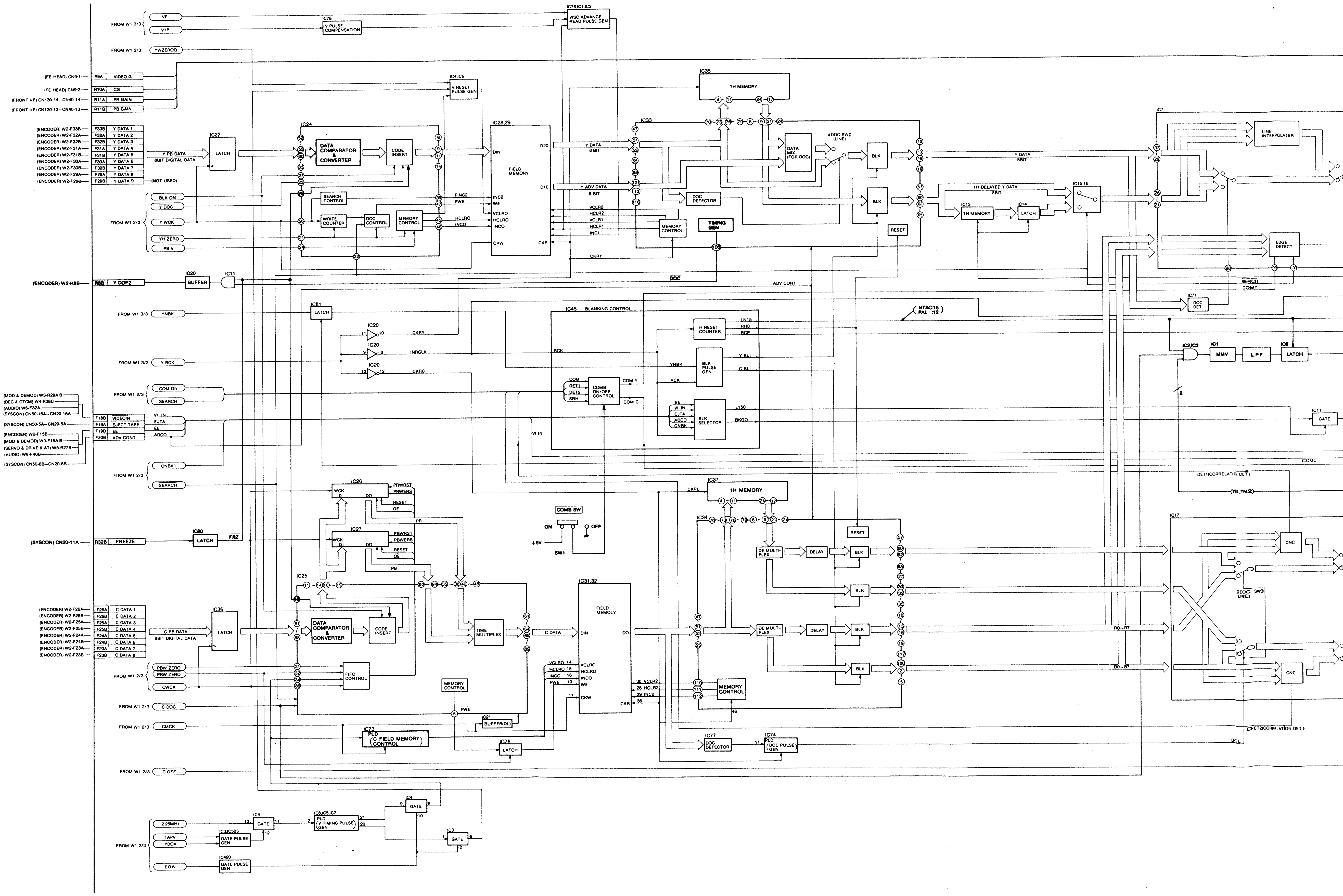
FROM W1 3/3
VP
V1P
IC76
V PULSE COMPENSATION
IC76,IC1,IC2
VISC ADVANCE READ PULSE GEN
FROM W1 2/3
YWZEROQ
(FE HEAD) CN9-1
R9A
VIDEO G
(FE HEAD) CN9-3
R10A
CG
(FRONT I/F) CN130-14—CN40-14
R11A
PR GAIN
(FRONT I/F) CN130-13—CN40-13
R11B
PB GAIN
IC4,IC6
V RESET PULSE GEN
(ENCODER) W2-F33B
F33B
Y DATA 1
(ENCODER) W2-F32A
F32A
Y DATA 2
(ENCODER) W2-F32B
F32B
Y DATA 3
(ENCODER) W2-F31A
F31A
Y DATA 4
(ENCODER) W2-F31B
F31B
Y DATA 5
(ENCODER) W2-F30A
F30A
Y DATA 6
(ENCODER) W2-F30B
F30B
Y DATA 7
(ENCODER) W2-F29A
F29A
Y DATA 8
(ENCODER) W2-F29B
F29B
Y DATA 9
(NOT USED)
Y PB DATA
8BIT DIGITAL DATA
IC22
LATCH
IC24
DATA COMPARATOR & CONVERTER
CODE INSERT
SEARCH CONTROL
WRITE COUNTER
DOC CONTROL
MEMORY CONTROL
FINC2
FWE
HCLRO
INCO
FROM W1 2/3
BLK ON
Y DOC
Y WCK
YH ZERO
PB V
IC28,29
FIELD MEMORY
DIN
INC2
WE
VCLRO
HCLRO
INCO
CKW
D20
D10
CKR
Y DATA
8 BIT
Y ADV DATA
8 BIT
VCLR2
HCLR2
VCLR1
HCLR1
INC1
CKRY
IC35
1H MEMORY
IC33
DATA MIX (FOR DOC)
《DOC SW》 (LINE)
BLK
BLK
DOC DETECTOR
MEMORY CONTROL
TIMING GEN
RESET
DOC
ADV CON1
(ENCODER) W2-R8B
R8B
Y DOP2
IC20
BUFFER
IC11
FROM W1 3/3
YNBK
IC81
LATCH
IC20
CKRY
INRCLK
CKRC
FROM W1 3/3
Y RCK
FROM W1 2/3
COM ON
SEARCH
(MOD & DEMOD) W3-R29A.B
(DEC & CTCM) W4-R38B
(AUDIO) W6-F32A
(SYSCON) CN50-16A—CN20-16A
(SYSCON) CN50-5A—CN20-5A
(ENCODER) W2-F15B
(MOD & DEMOD) W3-F15A.B
(SERVO & DRIVE & AT) W5-R27B
(AUDIO) W6-F46B
(SYSCON) CN50-6B—CN20-6B
F18B
VIDEOIN
F19A
EJECT TAPE
F19B
EE
F20B
ADV CONT
VI_IN
EJTA
EE
ADCO
FROM W1 2/3
CNBK1
SEARCH
IC45 BLANKING CONTROL
RCK
COM
DET1
DET2
SRH
COMB ON/OFF CONTROL
COM Y
COM C
H RESET COUNTER
LN15
RHD
RCP
YNBK
RCK
BLK PULSE GEN
Y BLI
C BLI
EE
VI IN
EJTA
ADCO
CNBK
BLK SELECTOR
L150
BKGO
VI IN
(NTSC:15 PAL :12)
IC26
WCK
D
DO
PRWRST
PRWERS
RESET
OE
PR
IC27
WCK
DI
DO
PBWRST
PBWERS
RESET
OE
PB
COMB SW
ON
OFF
+5V
SW1
(SYSCON) CN20-11A
R32B
FREEZE
IC80
LATCH
FRZ
IC25
IC37
1H MEMORY
CKRL
IC34
DE MULTI-PLEX
DELAY
BLK
RESET
(ENCODER) W2-F26A
F26A
C DATA 1
(ENCODER) W2-F26B
F26B
C DATA 2
(ENCODER) W2-F25A
F25A
C DATA 3
(ENCODER) W2-F25B
F25B
C DATA 4
(ENCODER) W2-F24A
F24A
C DATA 5
(ENCODER) W2-F24B
F24B
C DATA 6
(ENCODER) W2-F23A
F23A
C DATA 7
(ENCODER) W2-F23B
F23B
C DATA 8
C PB DATA
8BIT DIGITAL DATA
IC36
LATCH
DATA COMPARATOR & CONVERTER
CODE INSERT
TIME MULTIPLEX
C DATA
IC31,32
FIELD MEMOLY
DIN
DO
VCLRO
HCLRO
INCO
WE
CKW
CKR
VCLR2
HCLR2
INC2
MEMORY CONTROL
FROM W1 2/3
PBW ZERO
PRW ZERO
CWCK
FIFO CONTROL
MEMORY CONTROL
FWE
FROM W1 2/3
C DOC
FROM W1 2/3
CMCK
IC21
BUFFER(DL)
IC73
PLD (C FIELD MEMORY CONTROL)
IC78
LATCH
IC77
DOC DETECTOR
IC74
PLD (DOC PULSE GEN)
FROM W1 2/3
C OFF
FROM W1 2/3
2.25MHz
TAPV
YDOV
EQW
IC4
GATE
IC3,IC503
GATE PULSE GEN
IC490
GATE PULSE GEN
IC8,IC5,IC7
PLD (V TIMING PULSE GEN)
IC4
GATE
IC3
GATE
1H DELAYED Y DATA
8BIT
IC13
1H MEMORY
IC14
LATCH
IC15,16
Y DATA
8BIT
IC7
LINE INTERPOLATER
EDGE DETECT
SERCH
COMY
IC71
DOC DET
IC2,IC3
IC1
MMV
L.P.F.
IC8
LATCH
2
IC11
GATE
COMC
DET1(CORRELATION DET)
(YN1,YN2)
IC17
CNC
《DOC SW》 (LINE)
R0~R7
B0~B7
CNC
DET2(CORRELATION DET)
DOL

RAM 1/3(FIELD TBC SECTION) [FOR PAL]

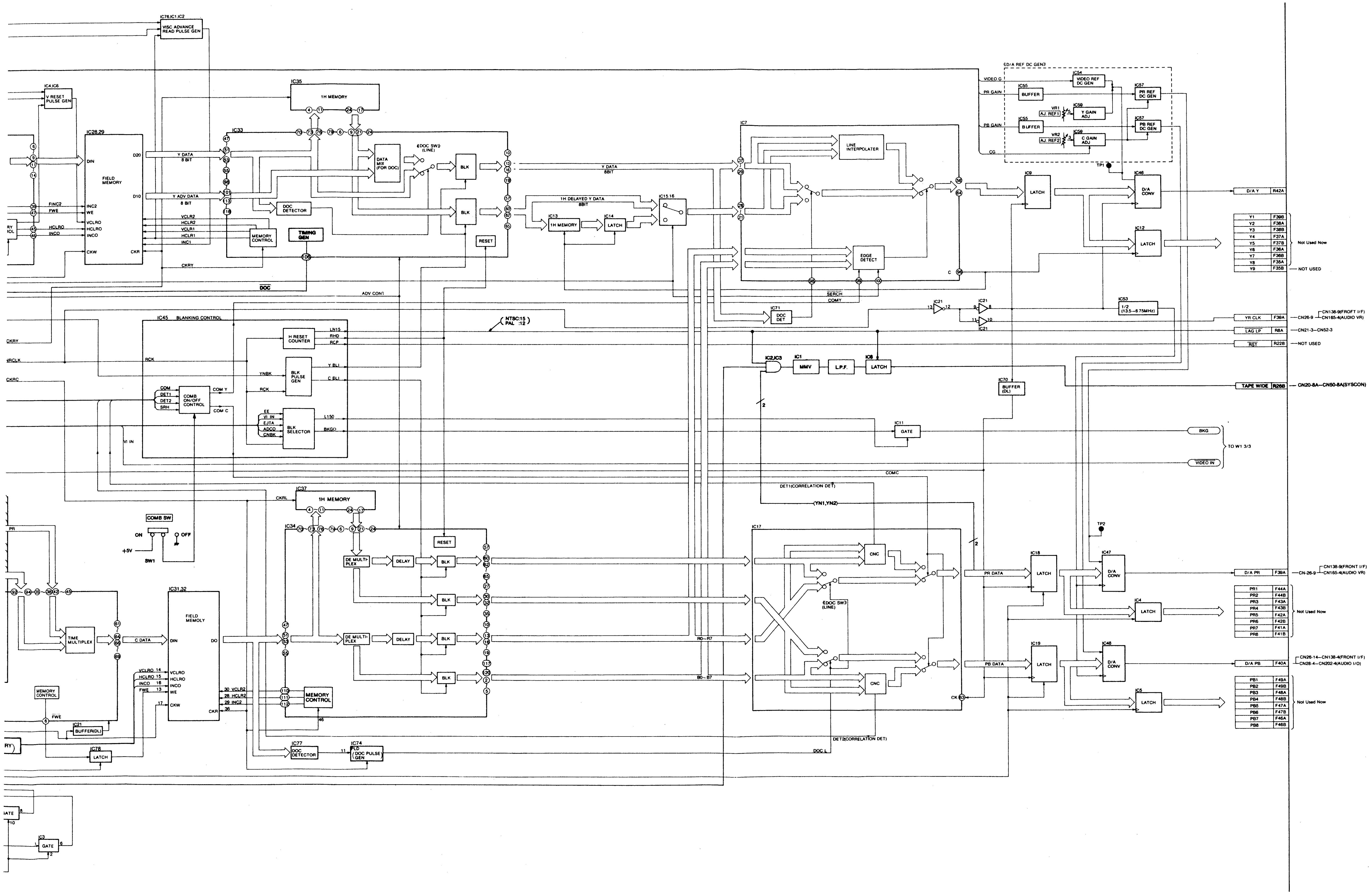
IC76,IC1,IC2
VISC ADVANCE READ PULSE GEN
IC4,IC6
V RESET PULSE GEN
IC28,29
FIELD MEMORY
DIN
D20
D10
INC2
WE
VCLRO
HCLRO
INCO
CKW
CKR
FINC2
FWE
HCLRO
INCO
Y DATA 8 BIT
Y ADV DATA 8 BIT
VCLR2
HCLR2
VCLR1
HCLR1
INC1
CKRY
IC35
1H MEMORY
IC33
DATA MIX (FOR DOC)
(DOC SW1) (LINE)
BLK
DOC DETECTOR
MEMORY CONTROL
TIMING GEN
RESET
DOC
ADV CON1
Y DATA 8BIT
1H DELAYED Y DATA 8BIT
IC13
1H MEMORY
IC14
LATCH
IC15,16
IC7
LINE INTERPOLATER
EDGE DETECT
SERCH
COMY
(D/A REF DC GEN)
VIDEO G
PR GAIN
PB GAIN
CG
IC55
BUFFER
IC54
VIDEO REF DC GEN
VR1
AJ REF1
IC59
Y GAIN ADJ
VR2
AJ REF2
C GAIN ADJ
IC57
PR REF DC GEN
PB REF DC GEN
TP1
IC9
LATCH
IC46
D/A CONV
IC12
LATCH
D/A Y
R42A
Y1 F39B
Y2 F38A
Y3 F38B
Y4 F37A
Y5 F37B
Y6 F36A
Y7 F36B
Y8 F35A
Y9 F35B
Not Used Now
NOT USED
IC53
1/2 (13.5→6.75MHz)
IC21
IC71
DOC DET
YR CLK F39A
CN26-9
CN138-9(FROFT I/F)
CN165-4(AUDIO VR)
LAG LP R8A
CN21-3—CN52-3
RST R22B
NOT USED
IC45 BLANKING CONTROL
(NTSC:15 PAL :12)
H RESET COUNTER
LN15
RHD
RCP
BLK PULSE GEN
Y BLI
C BLI
YNBK
RCK
COMB ON/OFF CONTROL
COM
DET1
DET2
SRH
COM Y
COM C
BLK SELECTOR
EE
VI IN
EJTA
ADCO
CNBK
L150
BKGO
CKRY
RCLK
CKRC
VI IN
IC2,IC3
IC1
MMV
L.P.F.
IC8
LATCH
IC70
BUFFER (DL)
TAPE WIDE R26B
CN20-8A—CN50-8A(SYSCON)
IC11
GATE
BKG
VIDEO IN
TO W1 3/3
COMC
DET1(CORRELATION DET)
(YN1,YN2)
IC37
1H MEMORY
CKRL
IC34
COMB SW
ON
OFF
+5V
SW1
DE MULTI-PLEX
DELAY
BLK
RESET
PR
IC31,32
FIELD MEMOLY
TIME MULTIPLEX
C DATA
DIN
DO
VCLRO
HCLRO
INCO
WE
CKW
CKR
VCLR2
HCLR2
INC2
MEMORY CONTROL
IC21
BUFFER(DL)
FWE
IC78
LATCH
IC77
DOC DETECTOR
IC74
FLD (DOC PULSE) GEN
DET2(CORRELATION DET)
DOC L
R0—R7
B0—B7
IC17
CNC
(DOC SW3) (LINE)
CK
TP2
PR DATA
PB DATA
IC18
LATCH
IC19
LATCH
IC47
D/A CONV
IC48
D/A CONV
IC4
LATCH
IC5
LATCH
D/A PR F39A
CN26-9
CN138-9(FRONT I/F)
CN165-4(AUDIO VR)
PR1 F44A
PR2 F44B
PR3 F43A
PR4 F43B
PR5 F42A
PR6 F42B
PR7 F41A
PR8 F41B
Not Used Now
D/A PB F40A
CN26-14—CN138-4(FRONT I/F)
CN28-4—CN202-4(AUDIO I/O)
PB1 F49A
PB2 F49B
PB3 F48A
PB4 F48B
PB5 F47A
PB6 F47B
PB7 F46A
PB8 F46B
Not Used Now
IC3
GATE
ATE
RY)

W1(TBC & SYNC GEN) BLOCK DIAGRAM 2/3 (WRITE CLOCK GEN SECTION)

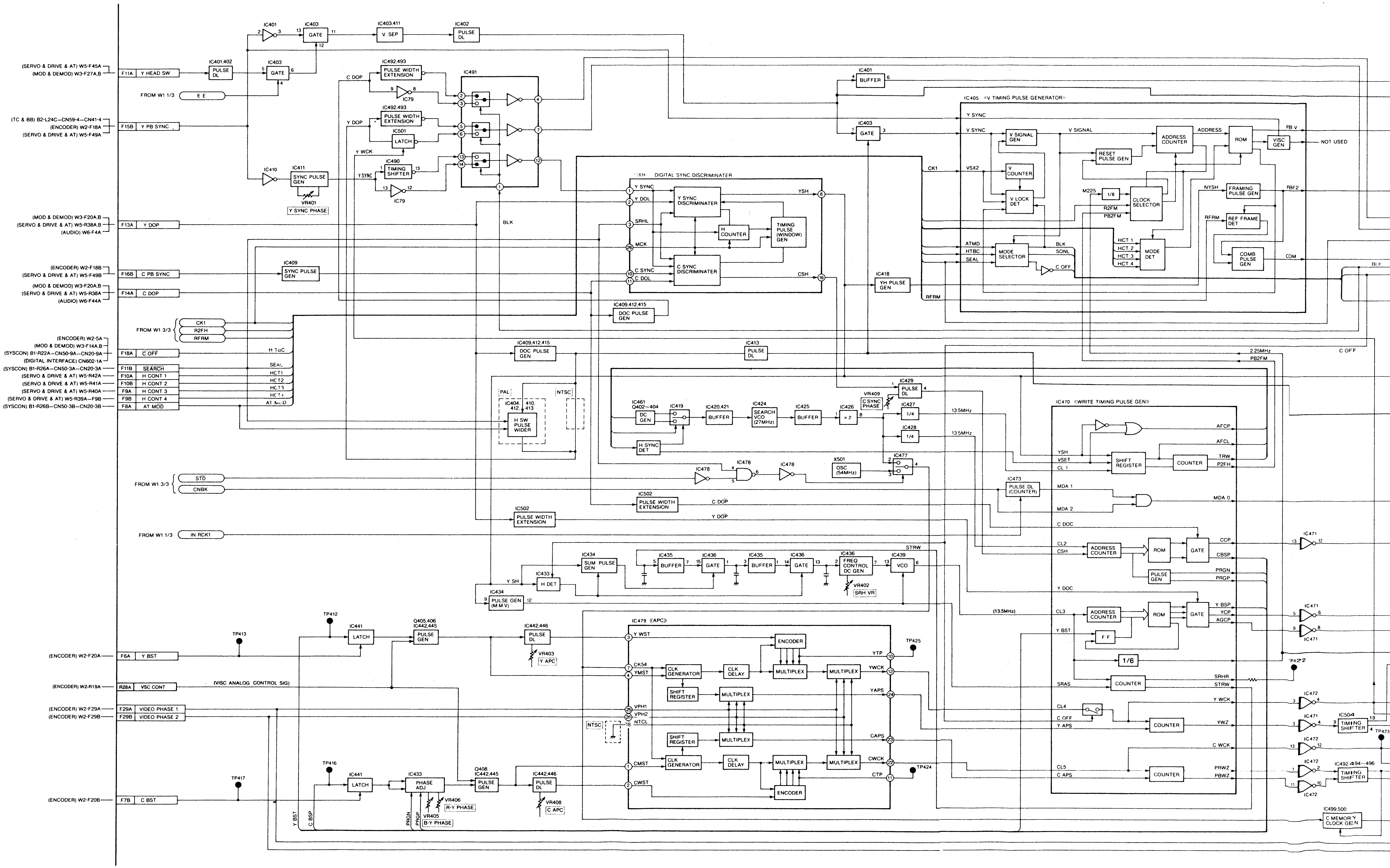

(SERVO & DRIVE & AT) W5-F45A
(MOD & DEMOD) W3-F27A,B
F11A Y HEAD SW
FROM W1 1/3 E E
(TC & BB) B2-L24C—CN59-4—CN41-4
(ENCODER) W2-F18A
(SERVO & DRIVE & AT) W5-F49A
F15B Y PB SYNC
(MOD & DEMOD) W3-F20A,B
(SERVO & DRIVE & AT) W5-R38A,B
(AUDIO) W6-F4A
F13A Y DOP
(ENCODER) W2-F18B
(SERVO & DRIVE & AT) W5-F49B
F16B C PB SYNC
(MOD & DEMOD) W3-F20A,B
(SERVO & DRIVE & AT) W5-R38A
(AUDIO) W6-F44A
F14A C DOP
FROM W1 3/3 CK1 R2FH RFRM
(ENCODER) W2-5A
(MOD & DEMOD) W3-F14A,B
(SYSCON) B1-R22A—CN50-9A—CN20-9A
(DIGITAL INTERFACE) CN602-1A
F18A C OFF
(SYSCON) B1-R26A—CN50-3A—CN20-3A
F11B SEARCH
(SERVO & DRIVE & AT) W5-R42A
F10A H CONT 1
(SERVO & DRIVE & AT) W5-R41A
F10B H CONT 2
(SERVO & DRIVE & AT) W5-R40A
F9A H CONT 3
(SERVO & DRIVE & AT) W5-R39A—F9B
F9B H CONT 4
(SYSCON) B1-R26B—CN50-3B—CN20-3B
F8A AT MOD
FROM W1 3/3 STD CNBK
FROM W1 1/3 IN RCK1
(ENCODER) W2-F20A
F6A Y BST
(ENCODER) W2-R19A
R28A VSC CONT
(VISC ANALOG CONTROL SIG)
(ENCODER) W2-F29A
F29A VIDEO PHASE 1
(ENCODER) W2-F29B
F29B VIDEO PHASE 2
(ENCODER) W2-F20B
F7B C BST
IC401
IC403 GATE
IC403,411 V SEP
IC402 PULSE DL
IC401,402 PULSE DL
IC403 GATE
C DOP
IC492,493 PULSE WIDTH EXTENSION
IC79
Y DOP
IC492,493 PULSE WIDTH EXTENSION
IC501 LATCH
Y WCK
IC491
IC410
IC411 SYNC PULSE GEN
VR401 Y SYNC PHASE
IC490 TIMING SHIFTER
Y SYNC
BLK
IC41 DIGITAL SYNC DISCRIMINATER
Y SYNC
Y DOL
SRHL
MCK
C SYNC
C DOL
Y SYNC DISCRIMINATER
H COUNTER
TIMING PULSE (WINDOW) GEN
C SYNC DISCRIMINATER
YSH
CSH
IC409 SYNC PULSE GEN
IC409,412,415 DOC PULSE GEN
IC409,412,415 DOC PULSE GEN
IC413 PULSE DL
IC401 BUFFER
IC403 GATE
IC418 YH PULSE GEN
CK1
RFRM
IC405 《V TIMING PULSE GENERATOR》
Y SYNC
V SYNC
V SIGNAL GEN
V SIGNAL
VSX2
V COUNTER
V LOCK DET
RESET PULSE GEN
ADDRESS COUNTER
ADDRESS
ROM
VISC GEN
PB V
NOT USED
M225
1/8
R2FM
PB2FM
CLOCK SELECTOR
NYSH
FRAMING PULSE GEN
PBF2
RFRM
REF FRAME DET
HCT 1
HCT 2
HCT 3
HCT 4
MODE DET
COMB PULSE GEN
COM
ATMD
HTBC
SEAL
MODE SELECTOR
BLK
SONL
C OFF
BLK
H TBC
SEAL
HCT1
HCT2
HCT3
HCT4
AT MOD
PAL
IC404, 410 412, 413
H SW PULSE WIDER
NTSC
IC461 Q402—404
DC GEN
IC419
H SYNC DET
IC420,421 BUFFER
IC424 SEARCH VCO (27MHz)
IC425 BUFFER
IC426 × 2
VR409 C SYNC PHASE
IC429 PULSE DL
IC427 1/4
IC428 1/4
13.5MHz
13.5MHz
IC477
IC478
X501 OSC (54MHz)
IC473 PULSE DL (COUNTER)
IC502 PULSE WIDTH EXTENSION
C DOP
IC502 PULSE WIDTH EXTENSION
Y DOP
2.25MHz
PB2FM
C OFF
IC470 《WRITE TIMING PULSE GEN》
YSH
VSET
CL 1
SHIFT REGISTER
COUNTER
AFCP
AFCL
TRW
P2FH
MDA 1
MDA 2
MDA 0
C DOC
CL2
CSH
ADDRESS COUNTER
ROM
GATE
CCP
CBSP
PULSE GEN
PRGN
PRGP
Y DOC
CL3
ADDRESS COUNTER
ROM
GATE
Y BSP
YCP
AGCP
Y BST
F F
1/6
SRAS
COUNTER
SRHR
STRW
CL4
C OFF
Y APS
Y WCK
COUNTER
YWZ
C WCK
CL5
C APS
COUNTER
PRWZ
PBWZ
(13.5MHz)
IC471
IC471
IC471
TP422
IC472
IC471
IC504 TIMING SHIFTER
TP423
IC472
IC472
IC492,494—496 TIMING SHIFTER
IC472
IC499,500 C MEMORY CLOCK GEN
STRW
IC434 SUM PULSE GEN
IC435 BUFFER
IC436 GATE
IC435 BUFFER
IC436 GATE
IC436 FREQ CONTROL DC GEN
IC439 VCO
VR402 SRH VR
Y SH
IC433 H DET
IC434 PULSE GEN (M.M.V)
TP412
IC441 LATCH
Q405,406 IC442,445 PULSE GEN
IC442,446 PULSE DL
VR403 Y APC
TP413
IC479 《APC》
Y WST
ENCODER
YTP
TP425
CK54
YMST
CLK GENERATOR
CLK DELAY
MULTIPLEX
MULTIPLEX
YWCK
SHIFT REGISTER
MULTIPLEX
YAPS
VPH1
VPH2
NTCL
NTSC
SHIFT REGISTER
MULTIPLEX
CAPS
CMST
CLK GENERATOR
CLK DELAY
MULTIPLEX
MULTIPLEX
CWCK
TP424
CWST
ENCODER
CTP
TP416
IC441 LATCH
IC433 PHASE ADJ
VR406 R-Y PHASE
VR405 B-Y PHASE
PRGN
PRGP
Q408 IC442,445 PULSE GEN
IC442,446 PULSE DL
VR408 C APC
TP417
Y BST
C BSP

M 2/3 (WRITE CLOCK GEN SECTION)

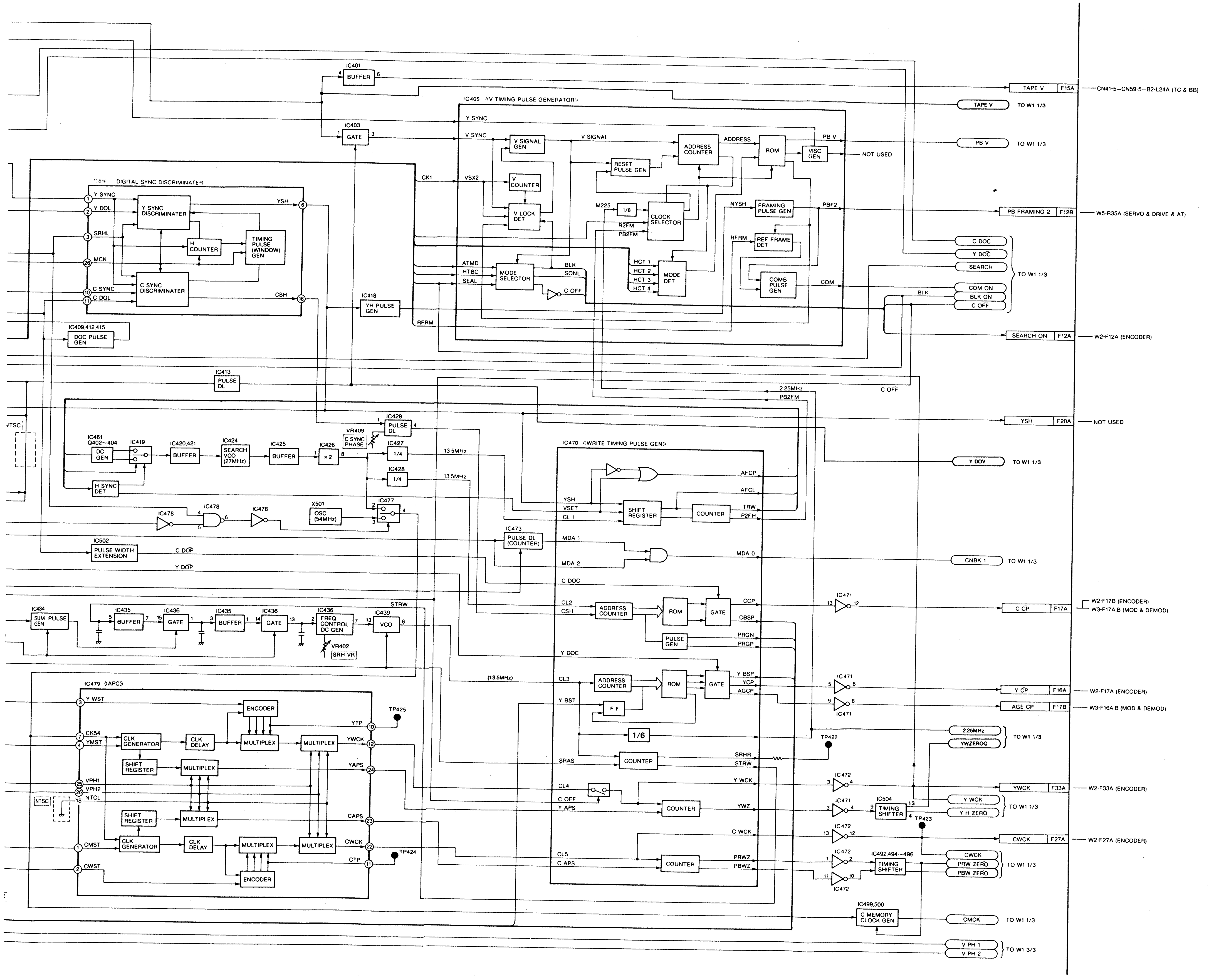
IC401
BUFFER
IC403
GATE
IC405 《V TIMING PULSE GENERATOR》
Y SYNC
V SYNC
V SIGNAL GEN
V SIGNAL
ADDRESS COUNTER
ADDRESS
ROM
VISC GEN
PB V
NOT USED
RESET PULSE GEN
CK1
VSX2
V COUNTER
V LOCK DET
M225
1/8
CLOCK SELECTOR
R2FM
PB2FM
NYSH
FRAMING PULSE GEN
PBF2
RFRM
REF FRAME DET
ATMD
HTBC
SEAL
MODE SELECTOR
BLK
SONL
C OFF
HCT 1
HCT 2
HCT 3
HCT 4
MODE DET
COMB PULSE GEN
COM
BLK
IC418
YH PULSE GEN
RFRM
IC416 DIGITAL SYNC DISCRIMINATER
Y SYNC
Y DOL
SRHL
MCK
C SYNC
C DOL
Y SYNC DISCRIMINATER
H COUNTER
TIMING PULSE (WINDOW) GEN
C SYNC DISCRIMINATER
YSH
CSH
IC409,412,415
DOC PULSE GEN
IC413
PULSE DL
2.25MHz
PB2FM
C OFF
TAPE V
F15A
CN41-5—CN59-5—B2-L24A (TC & BB)
TAPE V
TO W1 1/3
PB V
TO W1 1/3
PB FRAMING 2
F12B
W5-R35A (SERVO & DRIVE & AT)
C DOC
Y DOC
SEARCH
COM ON
BLK ON
C OFF
TO W1 1/3
SEARCH ON
F12A
W2-F12A (ENCODER)
YSH
F20A
NOT USED
Y DOV
TO W1 1/3
NTSC
IC461 Q402~404
DC GEN
IC419
IC420,421
BUFFER
IC424
SEARCH VCO (27MHz)
IC425
BUFFER
IC426
×2
IC429
PULSE DL
VR409
C SYNC PHASE
IC427
1/4
IC428
1/4
13.5MHz
13.5MHz
H SYNC DET
IC478
IC478
IC478
X501
OSC (54MHz)
IC477
IC502
PULSE WIDTH EXTENSION
C DOP
Y DOP
IC470 《WRITE TIMING PULSE GEN》
AFCP
AFCL
YSH
VSET
CL 1
SHIFT REGISTER
COUNTER
TRW
P2FH
IC473
PULSE DL (COUNTER)
MDA 1
MDA 2
MDA 0
CNBK 1
TO W1 1/3
C DOC
CL2
CSH
ADDRESS COUNTER
ROM
GATE
CCP
CBSP
PULSE GEN
PRGN
PRGP
Y DOC
(13.5MHz)
CL3
Y BST
ADDRESS COUNTER
ROM
GATE
Y BSP
YCP
AGCP
F F
1/6
SRAS
COUNTER
SRHR
STRW
Y WCK
CL4
C OFF
Y APS
COUNTER
YWZ
C WCK
CL5
C APS
COUNTER
PRWZ
PBWZ
IC434
SUM PULSE GEN
IC435
BUFFER
IC436
GATE
IC435
BUFFER
IC436
GATE
IC436
FREQ CONTROL DC GEN
VR402
SRH VR
IC439
VCO
STRW
IC479 《APC》
Y WST
CK54
YMST
CLK GENERATOR
CLK DELAY
SHIFT REGISTER
ENCODER
MULTIPLEX
MULTIPLEX
MULTIPLEX
YTP
YWCK
YAPS
TP425
VPH1
VPH2
NTCL
NTSC
SHIFT REGISTER
MULTIPLEX
CAPS
CMST
CLK GENERATOR
CLK DELAY
MULTIPLEX
MULTIPLEX
CWCK
CTP
TP424
CWST
ENCODER
IC471
C CP
F17A
W2-F17B (ENCODER)
W3-F17A,B (MOD & DEMOD)
IC471
IC471
Y CP
F16A
W2-F17A (ENCODER)
AGE CP
F17B
W3-F16A,B (MOD & DEMOD)
TP422
2.25MHz
YWZEROQ
TO W1 1/3
IC472
YWCK
F33A
W2-F33A (ENCODER)
IC471
IC504
TIMING SHIFTER
TP423
Y WCK
Y H ZERO
TO W1 1/3
IC472
CWCK
F27A
W2-F27A (ENCODER)
IC472
IC492,494~496
TIMING SHIFTER
IC472
CWCK
PRW ZERO
PBW ZERO
TO W1 1/3
IC499,500
C MEMORY CLOCK GEN
CMCK
TO W1 1/3
V PH 1
V PH 2
TO W1 3/3

W1(TBC & SYNC GEN) BLOCK DIAGRAM 3/3 (SYNC GEN SECTION)

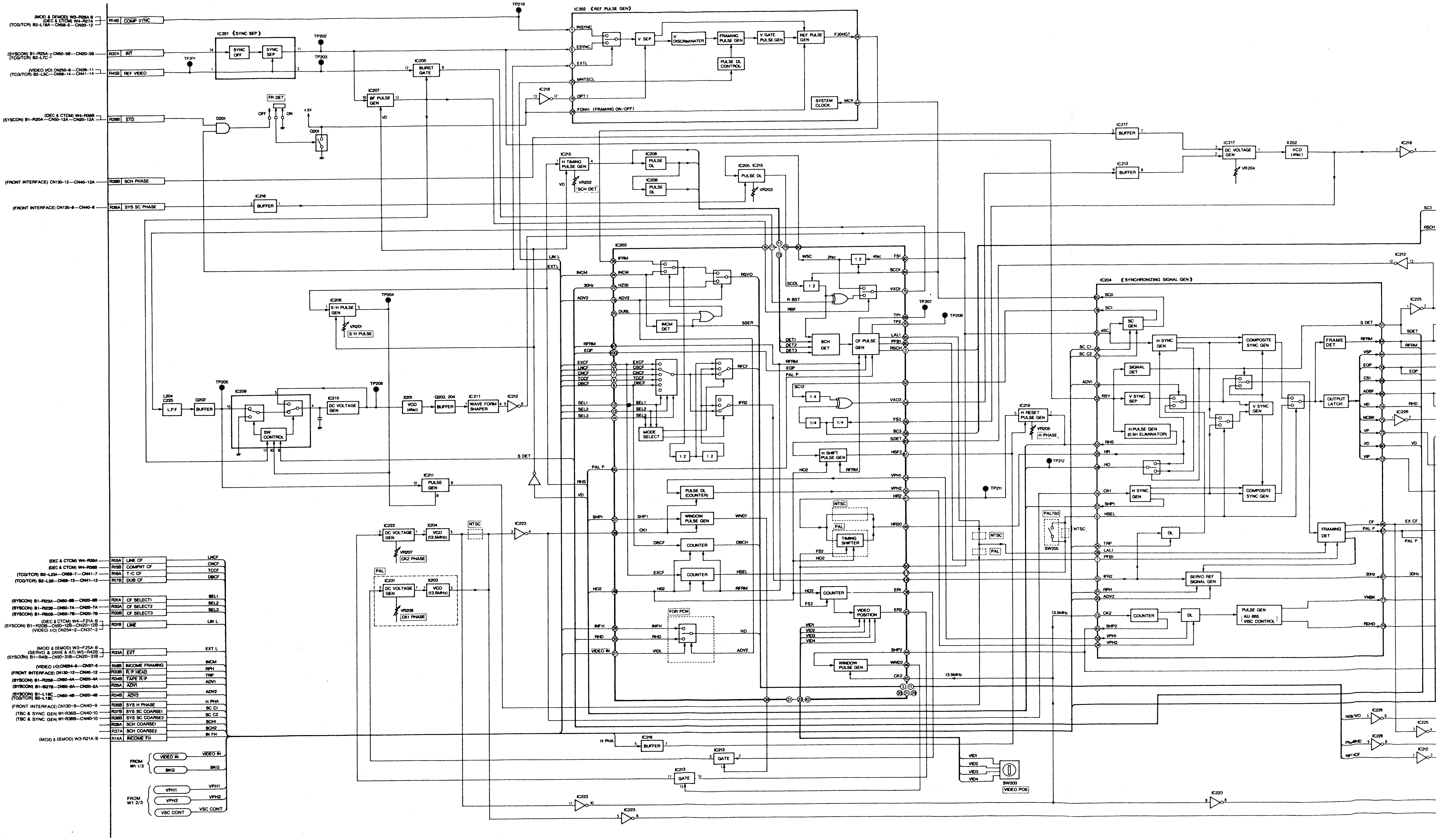

R14B COMP SYNC
R32A INT
R45B REF VIDEO
R28B STD
R36B SCH PHASE
R38A SYS SC PHASE
IC201 (SYNC SEP)
SYNC OFF
SYNC SEP
TP201
TP202
TP203
TP210
IC202 (REF PULSE GEN)
INSYNC
ESYNC
EXTL
MNTSCL
OPT 1
FONH (FRAMING ON/OFF)
V SEP
V DISCRIMINATER
FRAMING PULSE GEN
V GATE PULSE GEN
REF PULSE GEN
PULSE DL CONTROL
SYSTEM CLOCK
MCK
F30NGT
IC205 BURST GATE
IC207 BF PULSE GEN
IC218
FR DET
OFF
ON
+5V
D201
Q201
IC215 H TIMING PULSE GEN
VR202 SCH DET
IC208 PULSE DL
IC205, IC215 PULSE DL
VR203
IC216 BUFFER
IC217 BUFFER
IC213 BUFFER
IC217 DC VOLTAGE GEN
VR204
X202 VCO (4fsc)
IC218
IC206 S/H PULSE GEN
VR201 S/H PULSE
TP204
TP205
TP206
L204 C225 LPF
Q202 BUFFER
IC209
SW CONTROL
IC210 DC VOLTAGE GEN
X201 VCO (4fsc)
Q203, 204 BUFFER
IC211 WAVE FORM SHAPER
IC212
IC211 PULSE GEN
S DET
IC203
IFRM
INCM
HZ30
ADV2
DUBL
INCM DET
RSVO
SSER
EXCF
LNCF
CNCF
TCCF
DBCF
SEL1
SEL2
SEL3
MODE SELECT
RFCF
IFR2
RFRM
EQP
PAL P
RHS
VD
SHP1
CK1
HO2
INFH
RHD
VIDEO IN
VIDL
PULSE DL (COUNTER)
WINDOW PULSE GEN
WND1
COUNTER
DBCH
HSEL
FOR PCM
HD
WSC
2fsc
4fsc
FS1
SCO1
SCDL
R BST
RBF
VXO1
TP207
TP208
TP1
TP2
DET1
DET2
DET3
SCH DET
CF PULSE GEN
LAL1
PFB1
RSCH
SC12
VXO3
FS3
SC3
SDET
H SHIFT PULSE GEN
HSF2
VPH1
VPH2
HR2
HR20
NTSC
PAL
TIMING SHIFTER
FS2
ERI
ER2
VIDEO POSITION
VID1
VID2
VID3
VID4
SHP2
WND2
CK2
13.5MHz
IC222 DC VOLTAGE GEN
X204 VCO (13.5MHz)
VR207 CK2 PHASE
IC221 DC VOLTAGE GEN
X203 VCO (13.5MHz)
VR206 CK1 PHASE
IC223
IC219 H RESET PULSE GEN
VR205 H PHASE
TP212
TP211
PAL760
SW205
IC204 (SYNCHRONIZING SIGNAL GEN)
SC0
SC1
SC GEN
4SC
SC C1
SC C2
ADV1
RSY
SIGNAL DET
V SYNC SEP
H SYNC GEN
H:PULSE GEN (0.5H ELIMINATOR)
COMPOSITE SYNC GEN
V SYNC GEN
FRAME DET
OUTPUT LATCH
S DET
SDET
VSP
EOP
CS1
ADBF
HD
NCBK
VP
VD
VIP
IC225
IC226
IC212
RHS
HR
HO
CK1
SHP1
HSEL
TRP
LAL1
PFB1
IFR2
RPH
ADV2
CK2
SHP2
VPH1
VPH2
DL
FRAMING DET
SERVO REF SIGNAL GEN
COUNTER
PULSE GEN (AU-865 VISC CONTROL)
CF
PAL P
EX CF
30Hz
YNBK
RDHD
SC3
RSCH
R15A LINE CF
R15B COMPNT CF
R16A T/C CF
R17B DUB CF
R31A CF SELECT1
R30A CF SELECT2
R30B CF SELECT3
R31B LINE
R33A EXT
R18B INCOME FRAMING
R33B R/P HEAD
R34B TAPE R/P
R35A ADV1
R34B ADV2
R36B SYS H PHASE
R37B SYS SC COARSE1
R38B SYS SC COARSE2
R38A SCH COARSE1
R37A SCH COARSE2
R14A INCOME FH
FROM W1 1/3
VIDEO IN
BKG
FROM W1 2/3
VPH1
VPH2
VSC CONT
H PHA
IC216 BUFFER
IC213 GATE
SW203 VIDEO POS
RS VO
PR4HD
RF CF

BLK-5

/3 (SYNC GEN SECTION)

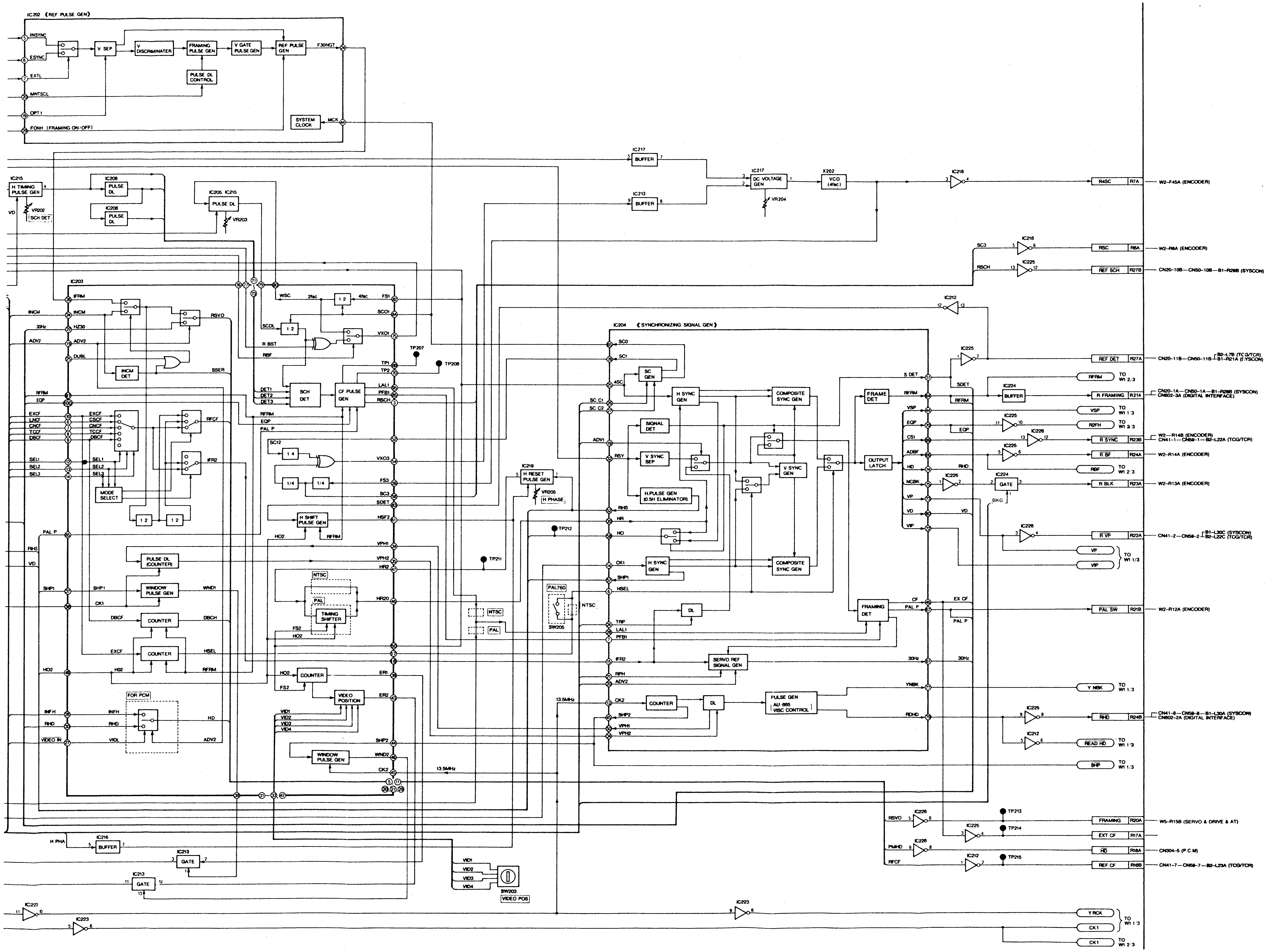
IC202 (REF PULSE GEN)
INSYNC
ESYNC
EXTL
MNTSCL
OPT1
FONH (FRAMING ON/OFF)
V SEP
V DISCRIMINATER
FRAMING PULSE GEN
V GATE PULSE GEN
REF PULSE GEN
PULSE DL CONTROL
SYSTEM CLOCK
F30NGT
MCK
IC215 H TIMING PULSE GEN
VR202 SCH DET
IC208 PULSE DL
IC205 IC215 PULSE DL
VR203
IC217 BUFFER
IC213 BUFFER
IC217 DC VOLTAGE GEN
VR204
X202 VCO (4fsc)
IC218
R4SC R7A W2-F45A (ENCODER)
RSC R6A W2-R6A (ENCODER)
REF SCH R27B CN20-10B—CN50-10B—B1-R29B (SYSCON)
IC203
IFRM INCM HZ30 ADV2 DUBL
INCM DET
SSER
RSVO
WSC 2fsc 1/2 4fsc FS1 SCO1
SCDL 1/2 VXO1
R BST RBF
TP207 TP208
TP1 TP2
DET1 DET2 DET3 SCH DET CF PULSE GEN LAL1 PFB1 RSCH
RFFM EQP PAL P
EXCF CSCF CNCF TCCF DBCF RFCF
SEL1 SEL2 SEL3 IFR2
MODE SELECT
1/2 1/2
SC12 1/4 1/4 1/4 VXO3 FS3 SC3 SDET
H SHIFT PULSE GEN HSF2 HO2 RFRM
VPH1 VPH2 HR2
PULSE DL (COUNTER)
WINDOW PULSE GEN WND1
COUNTER DBCH
COUNTER HSEL RFRM
NTSC PAL TIMING SHIFTER HR20 FS2 HO2
COUNTER ER1
VIDEO POSITION ER2
VID1 VID2 VID3 VID4
WINDOW PULSE GEN SHP2 WND2 CK2
FOR PCM INFH RHD VIDEO IN HD ADV2
13.5MHz
IC219 H RESET PULSE GEN VR205 H PHASE
TP212 TP211
PAL760 SW205 NTSC
IC204 (SYNCHRONIZING SIGNAL GEN)
SCO SC1 4SC SC C1 SC C2 SC GEN
H SYNC GEN
SIGNAL DET
ADV1 RSY V SYNC SEP
H.PULSE GEN (0.5H ELIMINATOR)
RHS HR HO
CK1 H SYNC GEN SHP1 HSEL
COMPOSITE SYNC GEN
V SYNC GEN
OUTPUT LATCH
FRAME DET
DL
TRP LAL1 PFB1
IFR2 RPH ADV2 SERVO REF SIGNAL GEN
CK2 COUNTER DL PULSE GEN AU-885 VISC CONTROL
SHP2 VPH1 VPH2
FRAMING DET
CF PAL P EX CF
30Hz
YNBK RDHD
S DET SDET RFRM VSP EQP CS1 ADBF HD NCBK VP VD VIP
IC212 IC225 IC226 IC224 BUFFER GATE BKG
REF DET R27A CN20-11B—CN50-11B—B2-L7B (TCG/TCR) B1-R21A (SYSCON)
RFRM TO W1 2/3
R FRAMING R21A CN20-1A—CN50-1A—B1-R29B (SYSCON) CN602-3A (DIGITAL INTERFACE)
VSP TO W1 1/3
R2FH TO W1 2/3
R SYNC R23B W2-R14B (ENCODER) CN41-1—CN59-1—B2-L22A (TCG/TCR)
R BF R24A W2-R14A (ENCODER)
RBF TO W1 2/3
R BLK R23A W2-R13A (ENCODER)
R VP R22A CN41-2—CN59-2—B1-L30C (SYSCON) B2-L22C (TCG/TCR)
VP VIP TO W1 1/3
PAL SW R21B W2-R12A (ENCODER)
Y NBK TO W1 1/3
RHD R24B CN41-8—CN59-8—B1-L30A (SYSCON) CN602-2A (DIGITAL INTERFACE)
READ HD TO W1 1/3
SHP TO W1 1/3
RSVO IC226 TP213 FRAMING R20A W5-R15B (SERVO & DRIVE & AT)
IC225 TP214 EXT CF R17A
PMHD HD R18A CN304-5 (P.C.M)
RFCF IC212 TP215 REF CF R16B CN41-7—CN59-7—B2-L23A (TCG/TCR)
IC216 H PHA BUFFER
IC213 GATE
IC213 GATE
SW203 VIDEO POS
IC223
Y RCK CK1 TO W1 1/3
CK1 TO W1 2/3

IC203 (μPD65024GF152)

PIN NO.	PIN NAME	IN/ OUT	DESCRIPTION
3	RSCH	OUT	REFERENCE SCH
5	DBCH	OUT	DUB COLOR FRAMING IN HIGH
6	OSCF	IN	COMPO SITE COLOR FRAMING
7	CNCF	IN	COMPONENT COLOR FRAMING (ID PULSE)
8	TCCF	IN	TIME CODE COLOR FRAMING
9	DBCF	IN	DUB COLOR FRAMING
10	EXCF	IN	EXTERNAL COLOR FRAMING
11	RFCF	OUT	REFERENCE COLOR FRAMING FOR SERVO
12	SEL1	IN	COLOR FRAMING SELECTOR SIGNAL
13	SEL2	IN	COLOR FRAMING SELECTOR SIGNAL
14	SEL3	IN	COLOR FRAMING SELECTOR SIGNAL
16	IFR2	OUT	COLOR FRAMING SIGNAL FOR E-E
19	ADV2	IN	ADVANCE 2
20	RSVO	OUT	REFERENCE FOR SERVO VO (30Hz)
21	SSER	OUT	IMCM SIGNAL (24P) IN Ⓗ
22	HZ30	IN	30Hz
24	INCM	IN	INCOME 30Hz
25	DUBL	IN	DUB LOW
26	IFRM	IN	INCOME FRAME (REF 30Hz)
27	VIDL	IN	DELAYED VERTICAL INTERVAL
28	INFH	IN	INCOME FRAMING
29	HD	OUT	HORIZONTAL DRIVE PULSE
30	RHD	IN	HORIZONTAL DRIVE PULSE (=TBC READ TIMING)
31	VID1	IN	VIDEO φ1
32	VID2	IN	VIDEO φ2
33	VID3	IN	VIDEO φ3
34	VPH1	IN	VIDEO PHASE 1
35	VPH2	OUT	VIDEO PHASE 2
36	CK1	IN	CLOCK 1
37	SHP1	IN	SAMPLE HOLD PULSE 1
38	ER1	OUT	ERROR 1
39	WND1	OUT	WINDOW 1
42	VID4	IN	VIDEO φ4
43	ER2	OUT	ERROR 2
44	SHP	IN	SAMPLE HOLD PULSE 2

PIN NO.	PIN NAME	IN/ OUT	DESCRIPT
45	CK2	IN	CLOCK 2
46	WND2	OUT	WINDOW 2
47	HR2	IN	H RESET 2
48	HR20	OUT	H RESET 2 OUTPUT
49	HO2	IN	HO SIGNAL (IC204 5 NO. 2
50	FS2	IN	FOUR SUB CARRIER (4 FSC)
52	SCI2	IN	SC1 (IC204 78P) INP
53	SCH1	IN	SCH COARSE CONT
54	VXO3	OUT	CONTROL SIGNAL 3
55	SCH2	IN	SCH COARSE CONT
56	FS3	IN	FOUR SC NO. 3 (4 F
58	SC3	OUT	SUB CARRIER 3
60	SC02	IN	SUB CARRIER O (IC INPUT NO. 2
61	HSF2	OUT	H SHIFT PROTECTIO
69	TP1	OUT	TEST POINT 1 (FOR
70	TP2	OUT	TEST POINT 2 (FOR
71	DET1	IN	DETECTION FOR SU POLARITY (H TIMIN
72	DET2	IN	DETECTION FOR SU POLARITY (H TIMIN
73	DET3	IN	DETECTION FOR SU POLARITY (H TIMIN
74	PALP	IN	PAL PULSE
75	VXO1	OUT	CONTROL SIGNAL 1
76	RBF	IN	REFERENCE VIDEO
77	RBST	IN	REFERENCE VIDEO
79	SCDL	IN	DELAYED 2FSC
80	WSC	OUT	DOUBLE SUB CARR
81	SELM	IN	SELECT MODE (NTS
82	FS1	IN	FOUR SUB CARRIEI
83	SDET	IN	SYNC DETECTION
84	SCO1	IN	SUB CARRIER O (IC INPUT NO. 1
85	PFB1	OUT	COLOR FRAMING R (PAL)
95	LALI	OUT	COLOR FRAMING R (NTSC)
96	CF1	IN	COLOR FRAMING 1
97	RFRM	IN	REFERENCE FRAME
100	EQP	IN	EQUALIZING PULSE

IC204 SYNC GEN GATE ARRAY PIN FUNCTION (μPD65040GF144

PIN NO.	PIN NAME	IN OUT	FUNCTION
1	RST	IN	TEST RESET
2	VDD	IN	+5V
3	GND		
4	MODI	IN	[0] NTSC [1] PAL
5	MOD2	IN	[0] NTSC [1] PAL
6	HSEL	IN	H SYNC SELECT
7	PFBW	IN	V-BLK SET (NTSC) COLOR FRANING CONT. (PAL)
8	LSEL	IN	V-SYNC SELECT
9	CKSW	IN	VIDEO PHASE CLOCK SELECT
10	TST1	IN	TEST CONTROL
11	TST2	IN	TEST CONTROL
12	BDET	IN	BURST DETECT
13	CK2	IN	13.5MHz CLOCK
14	CK1	IN	13.5MHz CLOCK
15	IFR2	IN	INCOME VIDEO FRAMING
16	LPF2	IN	LPF FOR FRAMING
17	SSER	IN	SOURCE SEARCH 30Hz SELECT
18	PINH	IN	VISC CONTROL ON/OFF
19	ADV1	IN	ADVANCE 1 FOR V_P SELECT
20	ADV2	IN	ADVANCE 2 FOR 30Hz SELECT
21	RPH	IN	R/P HEAD SELECT
22	GND		
23	VDD	IN	+5V
24	TRP	IN	TRAPEZOIDE FOR PLL
26	SCC1	IN	SC PHASE CONTROL
27	SCC2	IN	SC PHASE CONTROL
28	LAL1	IN	COLOR FRAMING RESET
29	IVS	IN	INCOME VIDEO V SYNC
30	HR	IN	H.SYNC RESET
31	ISY	IN	IN VIDEO COMP SYNC
32	RSY	IN	REF VIDEO COMP SYNC
33	GND		
34	VPH2	IN	VIDEO PHASE MMV
35	PST1	IN	VISC CONTROL 90° STEP
36	PST2	IN	VISC CONTROL 90° STEP
37	ADS1	IN	ADVANCE SET
38	ADS2	IN	ADVANCE SET
39	ADS3	IN	ADVANCE SET
40	ADS4	IN	ADVANCE SET

PIN NO.	PIN NAME	IN OUT	FUNCTIO
41	RHS	OUT	REFERENCE H.SYNC
42	VDD	IN	+5V
43	GND		
44	VSP	OUT	V SEPARATION PULS
45	SHP2	OUT	CK2 SAMPLE & HOL
46	CF	OUT	COLOR FRAMING SI
47	SSEL	IN	HR ADJUST RANGE
48	CS2	OUT	COMPOSITE SYNC
49	LPF1	IN	LPF FOR FRAMING
50	VPH1	IN	VIDEO PHASE MMV
51	SDET	OUT	REF SYNC DETECT
52	RHS	OUT	REF H SYNC W/O EC
53	CBU	OUT	1 125MHz
54	YBU	OUT	2 25MHz
55	CBF	OUT	C BURST FLAG
56	YBF	OUT	Y BURST FLAG
57	SHP1	OUT	CK1 SAMPLE & HOL
58	HO	OUT	TRAPEZOIDE H PULS
59	IFR1	OUT	IN VIDEO FRAMING
60	RYS	OUT	R-Y (P_R) SYNC
61	30Hz	OUT	SERVO CONTROL 30
62	GND		
63	VDD	IN	+5V
64	RFRM	OUT	REF FRAMING
65	SCO	OUT	SUB CARRIER
66	ADBF	OUT	ADVANCE BURST FL
67	PALP	OUT	PAL PULSE (0 5fH)
68	CNBK	OUT	CHROMA DIGITAL B
69	CS1	OUT	COMP SYNC
70	EQP	OUT	EQUALIZER PULSE
71	BF	OUT	BURST FLAG
72	VIP	OUT	10 LINE PULSE
73	VP	OUT	V PULSE
74	HD	OUT	HORIZONTAL DRIVE
75	NCBK	OUT	COMP BLANKING SI
76	CBK	OUT	COMP BLANKING SI
77	YNBK	OUT	Y DIGITAL BLANKIN
78	SCI	OUT	SUB CARRIER
79	RDHD	OUT	TBC READ START
80	VD	OUT	VERTICAL DRIVE

REVERSE SIDE **DEC & CTC BLOCK DI**

W4 (DEC & CTCM) BLOCK DIAGRAM 1/4 (CHROMA SEP SECTION)[FOR AU-65H NTSC]

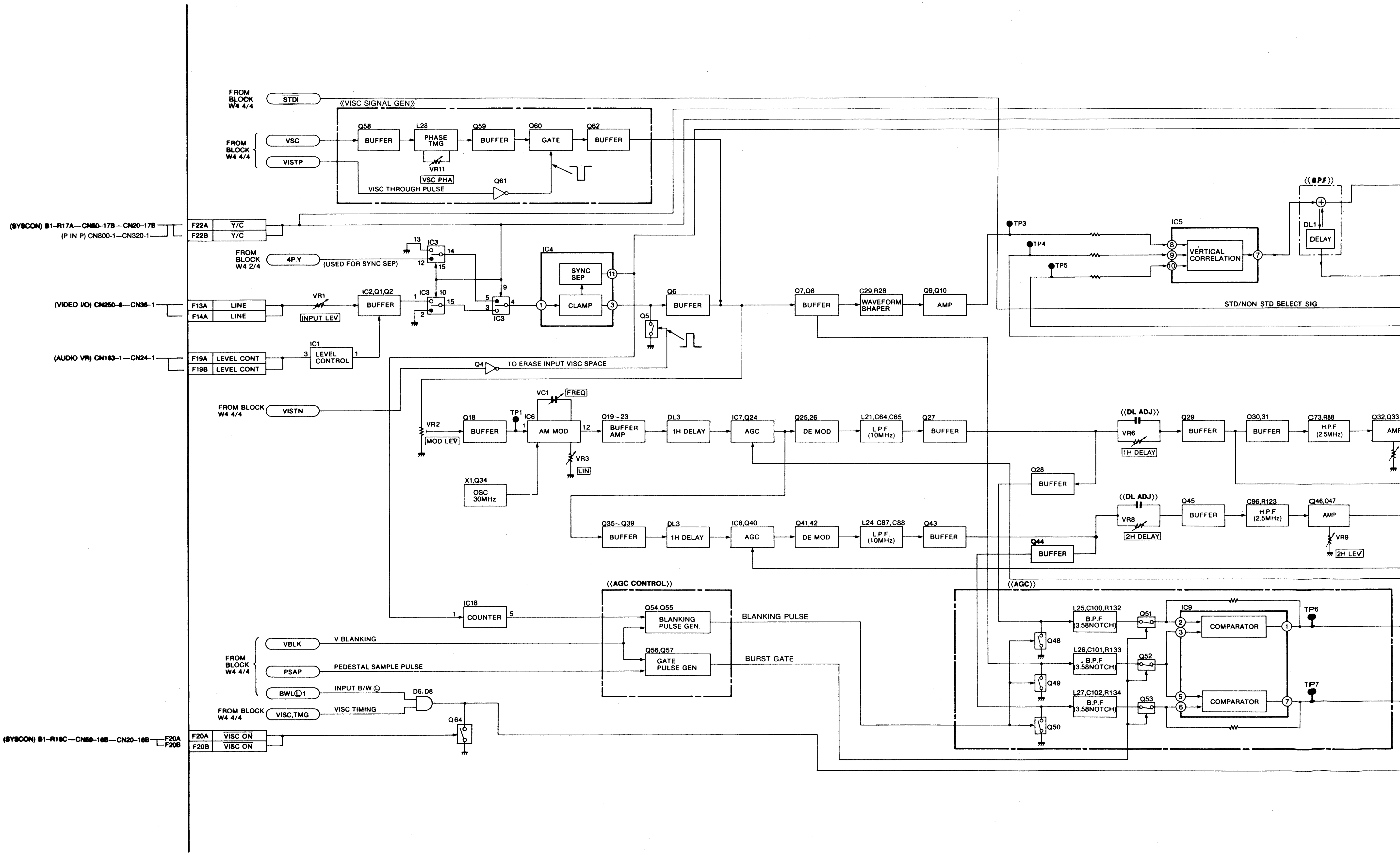

FROM BLOCK W4 4/4
STDI
《VISC SIGNAL GEN》
FROM BLOCK W4 4/4
VSC
VISTP
Q58
BUFFER
L28
PHASE TMG
VR11
VSC PHA
Q59
BUFFER
Q60
GATE
Q62
BUFFER
Q61
VISC THROUGH PULSE
(SYSCON) B1–R17A—CN60–17B—CN20–17B
(P IN P) CN800-1—CN320-1
F22A
Y/C
F22B
Y/C
FROM BLOCK W4 2/4
4P.Y
(USED FOR SYNC SEP)
IC3
13
14
12
15
IC4
SYNC SEP
CLAMP
11
1
3
9
5
3
4
IC3
(VIDEO I/O) CN250–6—CN36–1
F13A
LINE
F14A
LINE
VR1
INPUT LEV
IC2,Q1,Q2
BUFFER
IC3
10
15
2
Q6
BUFFER
Q5
(AUDIO VR) CN163–1—CN24–1
F19A
LEVEL CONT
F19B
LEVEL CONT
IC1
3
LEVEL CONTROL
1
Q4
TO ERASE INPUT VISC SPACE
FROM BLOCK W4 4/4
VISTN
VC1
FREQ
VR2
MOD LEV
Q18
BUFFER
TP1
IC6
1
AM MOD
12
VR3
LIN
X1,Q34
OSC 30MHz
Q19~23
BUFFER AMP
DL3
1H DELAY
IC7,Q24
AGC
Q25,26
DE MOD
L21,C64,C65
L.P.F. (10MHz)
Q27
BUFFER
Q7,Q8
BUFFER
C29,R28
WAVEFORM SHAPER
Q9,Q10
AMP
TP3
TP4
TP5
IC5
8
9
10
VERTICAL CORRELATION
7
《B.P.F》
DL1
DELAY
STD/NON STD SELECT SIG
《DL ADJ》
VR6
1H DELAY
Q29
BUFFER
Q30,31
BUFFER
C73,R88
H.P.F (2.5MHz)
Q32,Q33
AMP
Q28
BUFFER
Q35~Q39
BUFFER
DL3
1H DELAY
IC8,Q40
AGC
Q41,42
DE MOD
L24 C87,C88
L.P.F. (10MHz)
Q43
BUFFER
Q44
BUFFER
《DL ADJ》
VR8
2H DELAY
Q45
BUFFER
C96,R123
H.P.F (2.5MHz)
Q46,Q47
AMP
VR9
2H LEV
《AGC CONTROL》
IC18
1
COUNTER
5
Q54,Q55
BLANKING PULSE GEN.
Q56,Q57
GATE PULSE GEN
BLANKING PULSE
BURST GATE
FROM BLOCK W4 4/4
VBLK
V BLANKING
PSAP
PEDESTAL SAMPLE PULSE
BWL①1
INPUT B/W Ⓛ
D6,D8
FROM BLOCK W4 4/4
VISC.TMG
VISC TIMING
Q64
(SYSCON) B1–R16C—CN60–16B—CN20–16B
F20A
F20B
F20A
VISC ON
F20B
VISC ON
《AGC》
L25,C100,R132
B.P.F (3.58NOTCH)
Q51
L26,C101,R133
B.P.F (3.58NOTCH)
Q52
L27,C102,R134
B.P.F (3.58NOTCH)
Q53
Q48
Q49
Q50
IC9
2
3
COMPARATOR
1
5
6
COMPARATOR
7
TP6
TP7

GRAM 1/4 (CHROMA SEP SECTION)[FOR AU-65H NTSC]

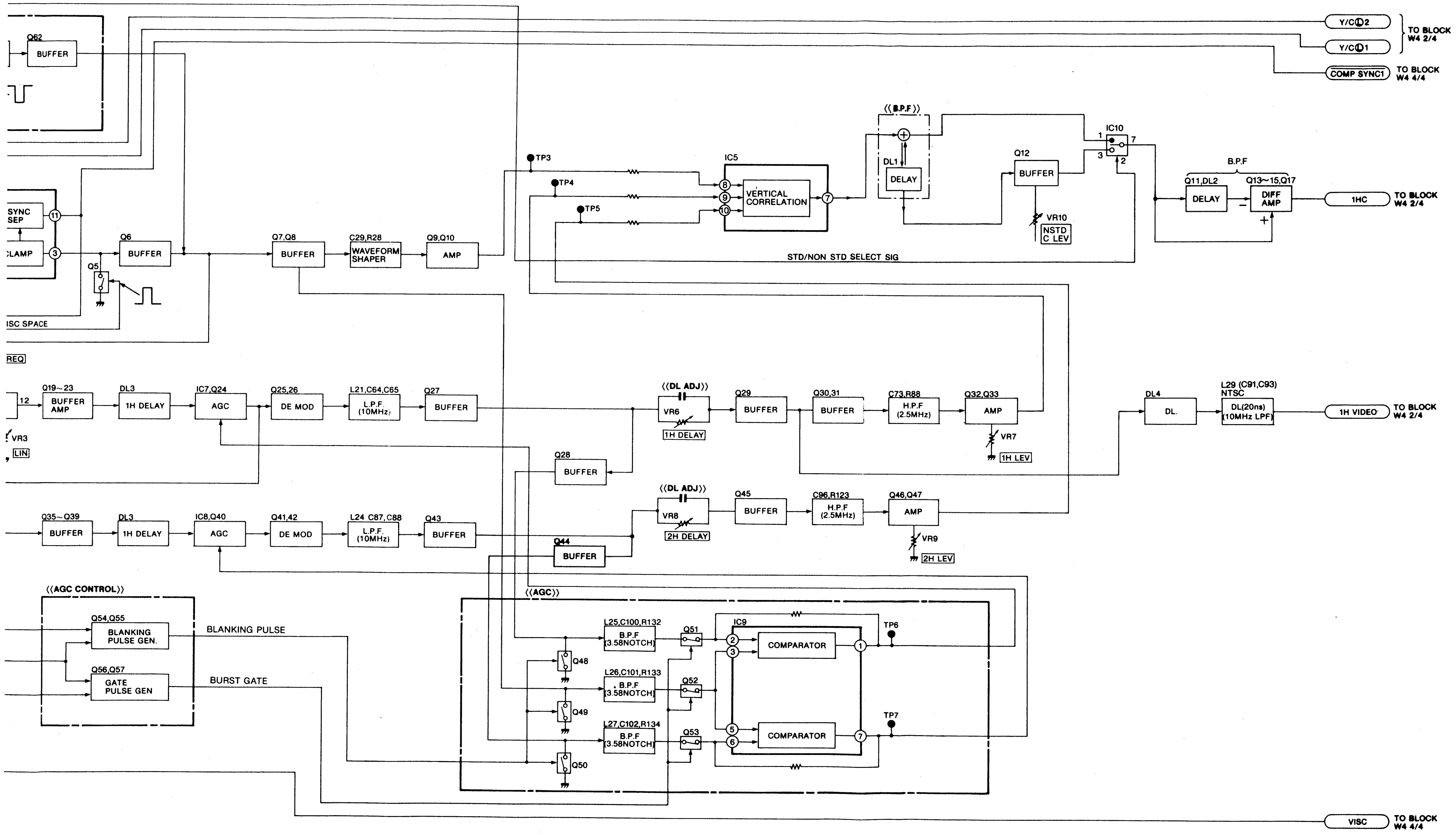
Q62
BUFFER
Y/C②2
Y/C①1
TO BLOCK W4 2/4
COMP SYNC1
TO BLOCK W4 4/4
SYNC SEP
11
CLAMP
3
Q6
BUFFER
Q5
ISC SPACE
TP3
TP4
TP5
Q7,Q8
BUFFER
C29,R28
WAVEFORM SHAPER
Q9,Q10
AMP
IC5
8
9
10
VERTICAL CORRELATION
7
((B.P.F))
DL1
DELAY
Q12
BUFFER
VR10
NSTD C LEV
IC10
1
3
7
2
B.P.F
Q11,DL2
DELAY
Q13~15,Q17
DIFF AMP
1HC
TO BLOCK W4 2/4
STD/NON STD SELECT SIG
REQ
Q19~23
12
BUFFER AMP
DL3
1H DELAY
IC7,Q24
AGC
Q25,26
DE MOD
L21,C64,C65
L.P.F. (10MHz)
Q27
BUFFER
VR3
LIN
((DL ADJ))
VR6
1H DELAY
Q29
BUFFER
Q30,31
BUFFER
C73,R88
H.P.F (2.5MHz)
Q32,Q33
AMP
VR7
1H LEV
DL4
DL.
L29 (C91,C93) NTSC
DL(20ns) (10MHz LPF)
1H VIDEO
TO BLOCK W4 2/4
Q28
BUFFER
((DL ADJ))
VR8
2H DELAY
Q45
BUFFER
C96,R123
H.P.F (2.5MHz)
Q46,Q47
AMP
VR9
2H LEV
Q35~Q39
BUFFER
DL3
1H DELAY
IC8,Q40
AGC
Q41,42
DE MOD
L24 C87,C88
L.P.F. (10MHz)
Q43
BUFFER
Q44
BUFFER
((AGC CONTROL))
Q54,Q55
BLANKING PULSE GEN.
Q56,Q57
GATE PULSE GEN
BLANKING PULSE
BURST GATE
((AGC))
Q48
Q49
Q50
L25,C100,R132
B.P.F (3.58NOTCH)
L26,C101,R133
B.P.F (3.58NOTCH)
L27,C102,R134
B.P.F (3.58NOTCH)
Q51
Q52
Q53
IC9
2
3
COMPARATOR
1
5
6
COMPARATOR
7
TP6
TP7
VISC
TO BLOCK W4 4/4

W4 (DEC & CTCM) BLOCK DIAGRAM 2/4 (Y,P_B,P_R DECODER SECTION) [FOR AU-65H NTSC]

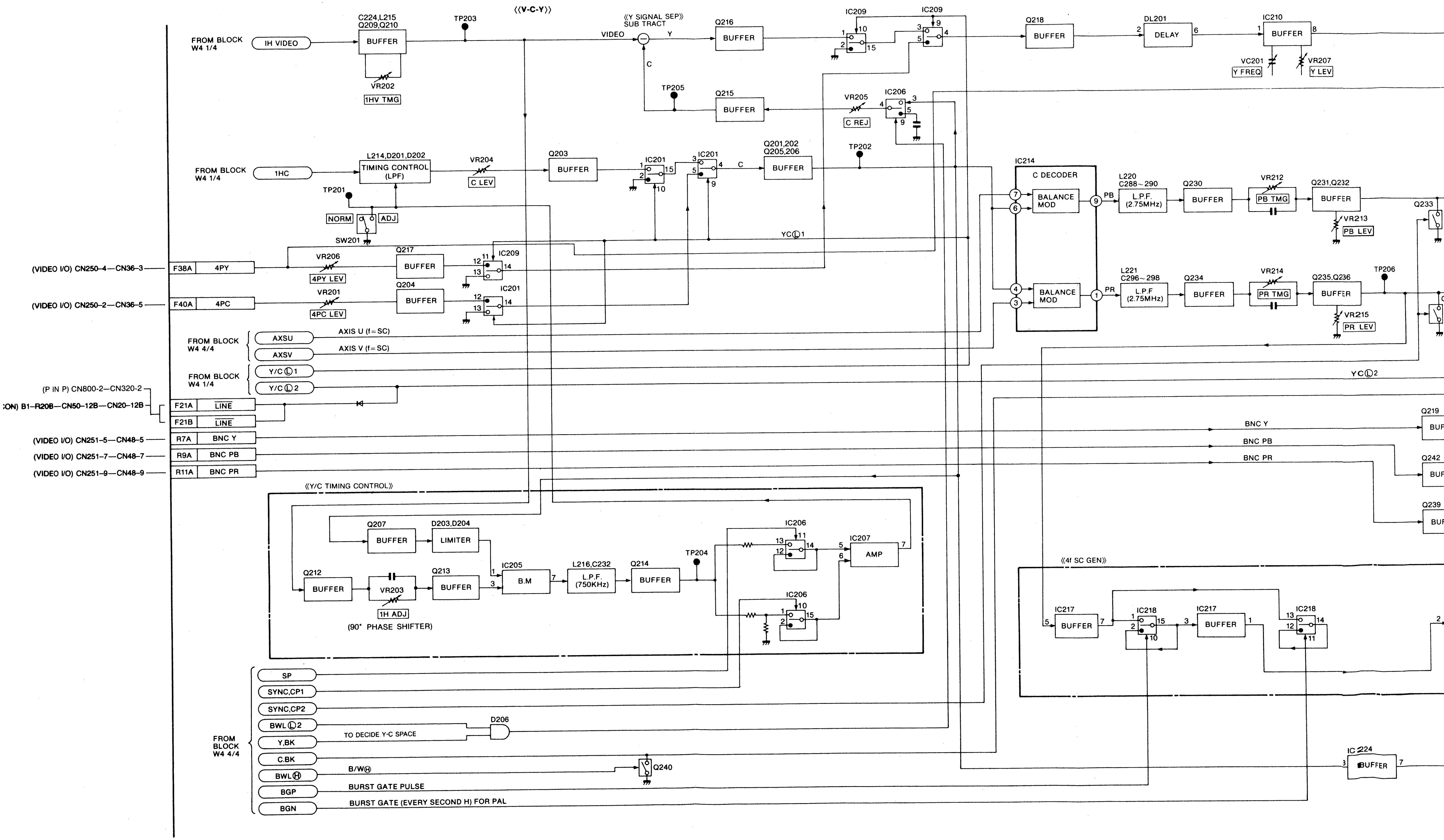
《V-C-Y》
FROM BLOCK W4 1/4
1H VIDEO
C224,L215 Q209,Q210
BUFFER
VR202
1HV TMG
TP203
《Y SIGNAL SEP》 SUB TRACT
VIDEO
Y
C
Q216
BUFFER
IC209
IC209
Q218
BUFFER
DL201
DELAY
IC210
BUFFER
VC201
Y FREQ
VR207
Y LEV
TP205
Q215
BUFFER
VR205
C REJ
IC206
FROM BLOCK W4 1/4
1HC
L214,D201,D202
TIMING CONTROL (LPF)
VR204
C LEV
Q203
BUFFER
IC201
IC201
C
Q201,202 Q205,206
BUFFER
TP202
TP201
NORM
ADJ
SW201
YC Ⓛ1
IC214
C DECODER
BALANCE MOD
BALANCE MOD
PB
PR
L220 C288～290
L.P.F. (2.75MHz)
Q230
BUFFER
VR212
PB TMG
Q231,Q232
BUFFER
VR213
PB LEV
Q233
L221 C296～298
L.P.F. (2.75MHz)
Q234
BUFFER
VR214
PR TMG
Q235,Q236
BUFFER
VR215
PR LEV
TP206
(VIDEO I/O) CN250-4—CN36-3
F38A
4PY
VR206
4PY LEV
Q217
BUFFER
IC209
(VIDEO I/O) CN250-2—CN36-5
F40A
4PC
VR201
4PC LEV
Q204
BUFFER
IC201
FROM BLOCK W4 4/4
AXSU
AXSV
AXIS U (f=SC)
AXIS V (f=SC)
FROM BLOCK W4 1/4
Y/C Ⓛ1
Y/C Ⓛ2
YC Ⓛ2
(P IN P) CN800-2—CN320-2
:ON) B1-R20B—CN50-12B—CN20-12B
F21A
LINE
F21B
LINE
(VIDEO I/O) CN251-5—CN48-5
R7A
BNC Y
(VIDEO I/O) CN251-7—CN48-7
R9A
BNC PB
(VIDEO I/O) CN251-9—CN48-9
R11A
BNC PR
BNC Y
BNC PB
BNC PR
Q219
BUF
Q242
BUF
Q239
BUF
《Y/C TIMING CONTROL》
Q207
BUFFER
D203,D204
LIMITER
IC206
IC207
AMP
TP204
Q212
BUFFER
VR203
1H ADJ
Q213
BUFFER
IC205
B.M
L216,C232
L.P.F. (750KHz)
Q214
BUFFER
(90° PHASE SHIFTER)
IC206
《4f SC GEN》
IC217
BUFFER
IC218
IC217
BUFFER
IC218
SP
SYNC,CP1
SYNC,CP2
BWL Ⓛ2
Y,BK
C.BK
BWL Ⓗ
BGP
BGN
FROM BLOCK W4 4/4
D206
TO DECIDE Y-C SPACE
Q240
B/W Ⓗ
BURST GATE PULSE
BURST GATE (EVERY SECOND H) FOR PAL
IC224
BUFFER

AM 2/4 (Y,P_B,P_R DECODER SECTION) [FOR AU-65H NTSC]

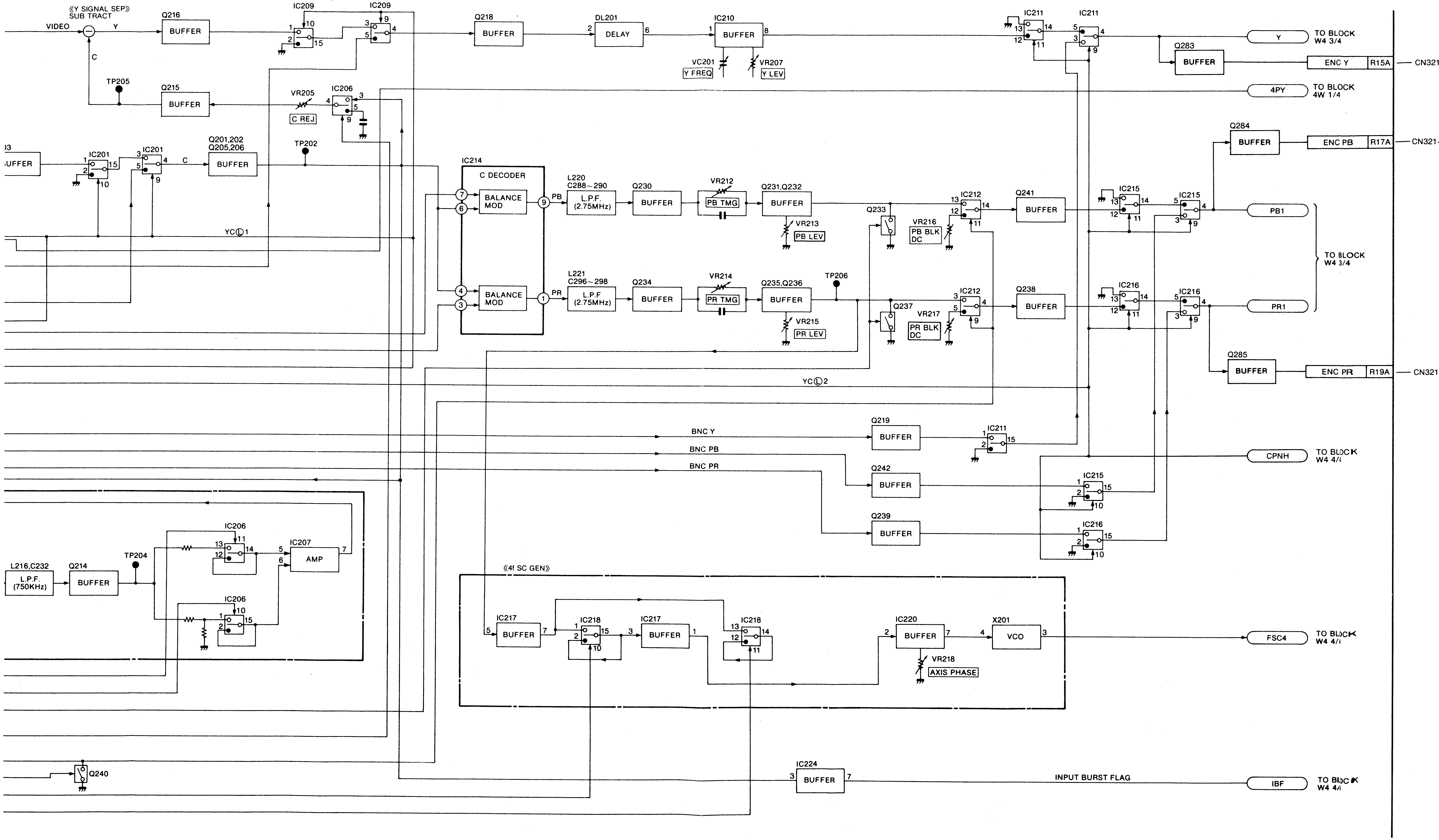
《Y SIGNAL SEP》
SUB TRACT
VIDEO
Y
C
Q216
BUFFER
IC209
IC209
Q218
BUFFER
DL201
DELAY
IC210
BUFFER
VC201
Y FREQ
VR207
Y LEV
IC211
IC211
Y
TO BLOCK W4 3/4
Q283
BUFFER
ENC Y
R15A
CN321
TP205
Q215
BUFFER
VR205
C REJ
IC206
4PY
TO BLOCK 4W 1/4
Q284
BUFFER
ENC PB
R17A
CN321
UFFER
IC201
IC201
C
Q201,202
Q205,206
BUFFER
TP202
IC214
C DECODER
BALANCE MOD
PB
L220
C288~290
L.P.F. (2.75MHz)
Q230
BUFFER
VR212
PB TMG
Q231,Q232
BUFFER
VR213
PB LEV
Q233
VR216
PB BLK DC
IC212
Q241
BUFFER
IC215
IC215
PB1
YC①1
TO BLOCK W4 3/4
BALANCE MOD
PR
L221
C296~298
L.P.F (2.75MHz)
Q234
BUFFER
VR214
PR TMG
Q235,Q236
BUFFER
VR215
PR LEV
TP206
Q237
VR217
PR BLK DC
IC212
Q238
BUFFER
IC216
IC216
PR1
Q285
BUFFER
ENC PR
R19A
CN321
YC①2
BNC Y
BNC PB
BNC PR
Q219
BUFFER
IC211
CPNH
TO BLOCK W4 4/4
Q242
BUFFER
IC215
Q239
BUFFER
IC216
IC206
IC207
AMP
L216,C232
L.P.F. (750KHz)
Q214
BUFFER
TP204
IC206
《4f SC GEN》
IC217
BUFFER
IC218
IC217
BUFFER
IC218
IC220
BUFFER
VR218
AXIS PHASE
X201
VCO
FSC4
TO BLOCK W4 4/4
Q240
IC224
BUFFER
INPUT BURST FLAG
IBF
TO BLOCK W4 4/4

W4 (DEC & CTCM) BLOCK DIAGRAM 3/4 (CTCM SECTION) [FOR AU-65H NTSC]

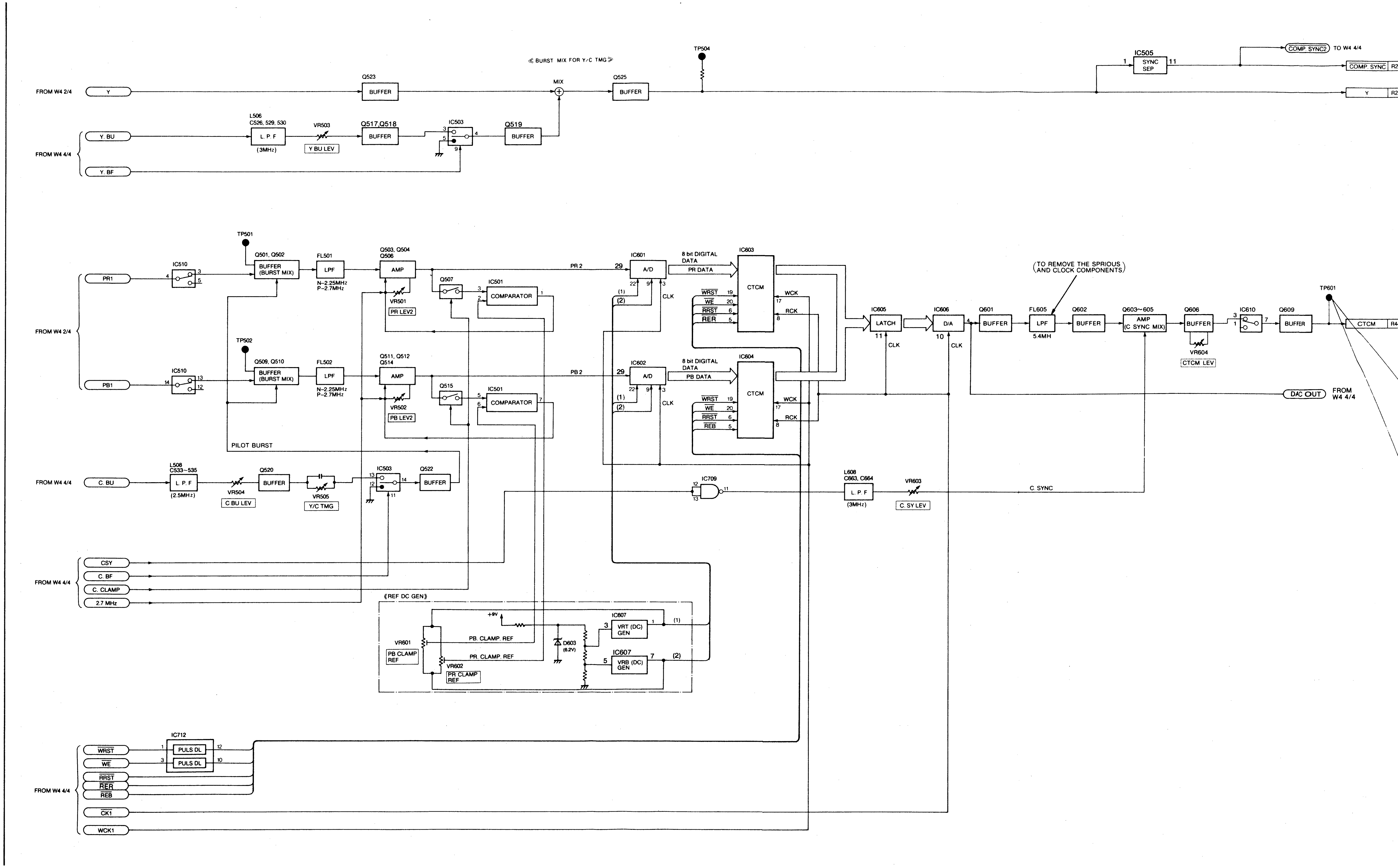

FROM W4 2/4
Y
Q523
BUFFER
《BURST MIX FOR Y/C TMG》
MIX
Q525
BUFFER
TP504
IC505
SYNC SEP
1
11
COMP. SYNC2
TO W4 4/4
COMP. SYNC
R2
Y
R2
FROM W4 4/4
Y. BU
Y. BF
L506
C526, 529, 530
L. P. F
(3MHz)
VR503
Y BU LEV
Q517,Q518
BUFFER
IC503
Q519
BUFFER
TP501
FROM W4 2/4
PR1
PB1
IC510
Q501, Q502
BUFFER (BURST MIX)
FL501
LPF
N-2.25MHz
P-2.7MHz
Q503, Q504
Q506
AMP
VR501
PR LEV2
Q507
IC501
COMPARATOR
PR 2
IC601
A/D
8 bit DIGITAL DATA
PR DATA
IC603
CTCM
WRST
WE
RRST
RER
WCK
RCK
CLK
(1)
(2)
TP502
Q509, Q510
BUFFER (BURST MIX)
FL502
LPF
N-2.25MHz
P-2.7MHz
Q511, Q512
Q514
AMP
VR502
PB LEV2
Q515
IC501
COMPARATOR
PB 2
IC602
A/D
8 bit DIGITAL DATA
PB DATA
IC604
CTCM
WRST
WE
RRST
REB
WCK
RCK
CLK
(TO REMOVE THE SPRIOUS AND CLOCK COMPONENTS)
IC605
LATCH
CLK
IC606
D/A
CLK
Q601
BUFFER
FL605
LPF
5.4MH
Q602
BUFFER
Q603~605
AMP
(C SYNC MIX)
Q606
BUFFER
VR604
CTCM LEV
IC610
Q609
BUFFER
TP601
CTCM
R4
DAC OUT
FROM W4 4/4
PILOT BURST
FROM W4 4/4
C. BU
L508
C533~535
L. P. F
(2.5MHz)
VR504
C BU LEV
Q520
BUFFER
VR505
Y/C TMG
IC503
Q522
BUFFER
IC709
L606
C663, C664
L. P. F
(3MHz)
VR603
C. SY LEV
C. SYNC
FROM W4 4/4
CSY
C. BF
C. CLAMP
2.7 MHz
《REF DC GEN》
+9V
VR601
PB CLAMP REF
PB. CLAMP. REF
PR. CLAMP. REF
VR602
PR CLAMP REF
D603
(6.2V)
IC607
VRT (DC) GEN
IC607
VRB (DC) GEN
(1)
(2)
FROM W4 4/4
IC712
WRST
WE
RRST
RER
REB
CK1
WCK1
PULS DL
PULS DL

CM SECTION) [FOR AU-65H NTSC]

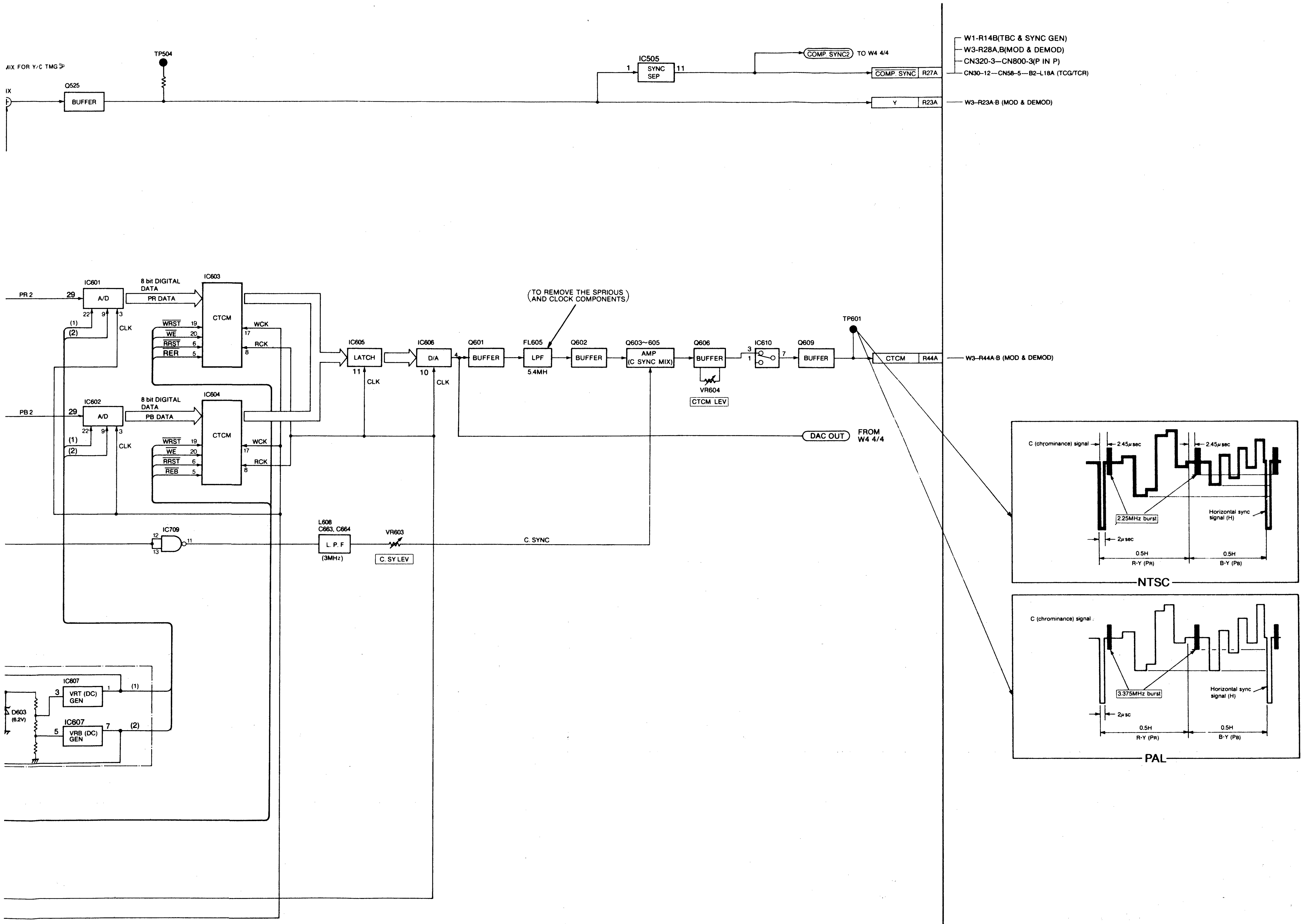
MIX FOR Y/C TMG
IX
Q525
BUFFER
TP504
IC505
SYNC SEP
1
11
COMP. SYNC2
TO W4 4/4
COMP. SYNC
R27A
Y
R23A
W1-R14B(TBC & SYNC GEN)
W3-R28A,B(MOD & DEMOD)
CN320-3—CN800-3(P IN P)
CN30-12—CN58-5—B2-L18A (TCG/TCR)
W3-R23A·B (MOD & DEMOD)
PR 2
29
IC601
A/D
22
9
3
(1)
(2)
CLK
8 bit DIGITAL DATA
PR DATA
IC603
CTCM
WRST
WE
RRST
RER
19
20
6
5
17
8
WCK
RCK
PB 2
IC602
A/D
8 bit DIGITAL DATA
PB DATA
IC604
CTCM
WRST
WE
RRST
REB
(TO REMOVE THE SPRIOUS AND CLOCK COMPONENTS)
IC605
LATCH
11
CLK
IC606
D/A
10
4
CLK
Q601
BUFFER
FL605
LPF
5.4MH
Q602
BUFFER
Q603~605
AMP
(C SYNC MIX)
Q606
BUFFER
VR604
CTCM LEV
IC610
3
1
7
Q609
BUFFER
TP601
CTCM
R44A
W3-R44A·B (MOD & DEMOD)
DAC OUT
FROM W4 4/4
IC709
12
13
11
L606
C663, C664
L.P.F
(3MHz)
VR603
C.SY LEV
C. SYNC
IC607
3
VRT (DC) GEN
1
(1)
D603
(6.2V)
IC607
5
VRB (DC) GEN
7
(2)
C (chrominance) signal
2.45μsec
2.45μsec
2.25MHz burst
Horizontal sync signal (H)
2μsec
0.5H
R-Y (PR)
0.5H
B-Y (PB)
NTSC
C (chrominance) signal
3.375MHz burst
Horizontal sync signal (H)
2μsec
0.5H
R-Y (PR)
0.5H
B-Y (PB)
PAL

W4 (DEC & CTCM) BLOCK DIAGRAM 4/4 (CONTROL PULSE GENERATION SECTION) [FOR AU-65H NTSC]

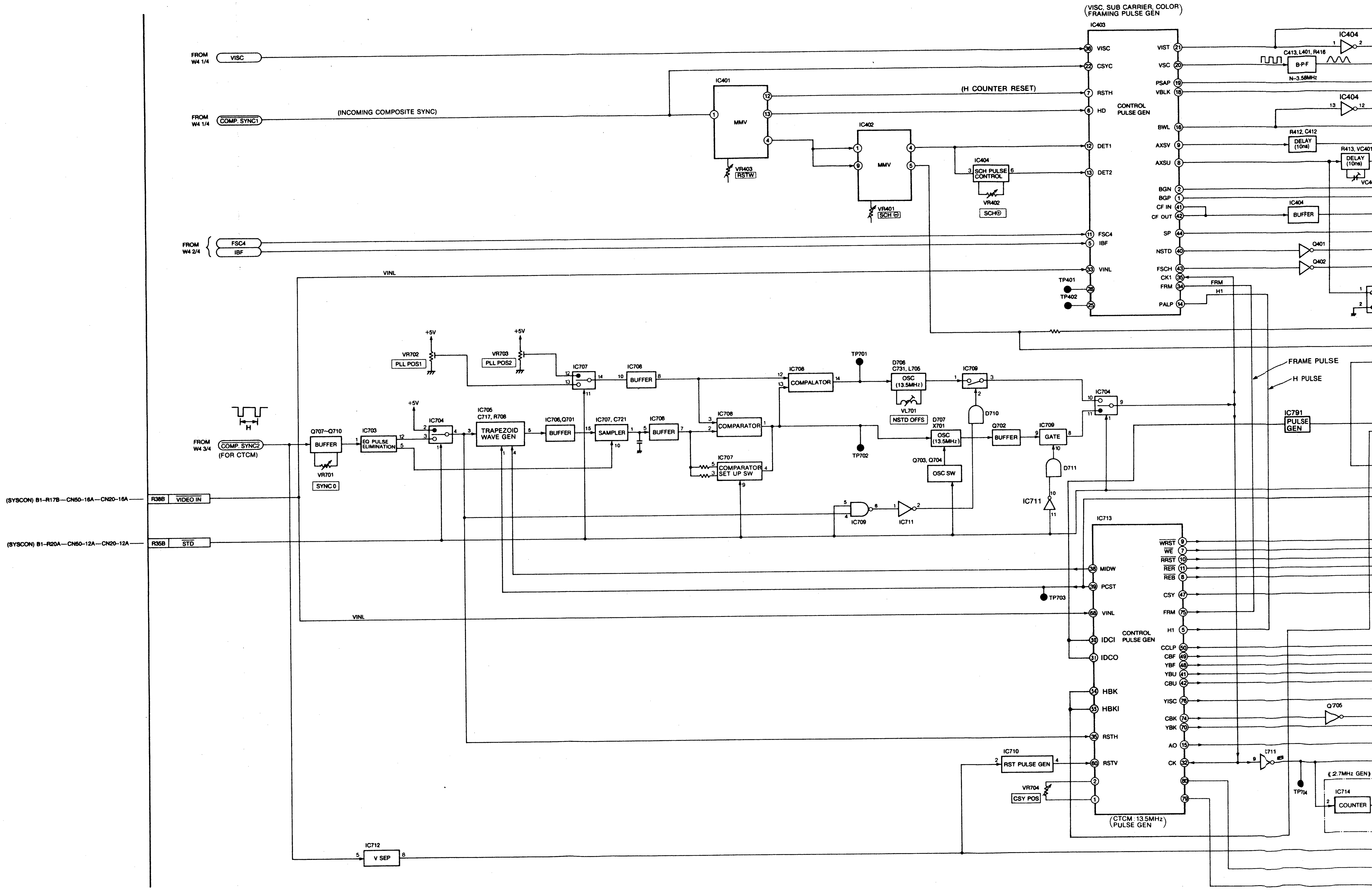

(VISC, SUB CARRIER, COLOR FRAMING PULSE GEN)
IC403
FROM W4 1/4
VISC
FROM W4 1/4
COMP. SYNC1
(INCOMING COMPOSITE SYNC)
IC401
MMV
VR403
RSTW
IC402
MMV
VR401
SCH ⊖
(H COUNTER RESET)
IC404
SCH PULSE CONTROL
VR402
SCH⊕
VISC
CSYC
RSTH
HD
CONTROL PULSE GEN
DET1
DET2
FSC4
IBF
VINL
VIST
VSC
PSAP
VBLK
BWL
AXSV
AXSU
BGN
BGP
CF IN
CF OUT
SP
NSTD
FSCH
CK1
FRM
PALP
FRM
H1
TP401
TP402
IC404
C413, L401, R416
B-P-F
N-3.58MHz
IC404
R412, C412
DELAY (10ns)
R413, VC401
DELAY (10ns)
IC404
BUFFER
Q401
Q402
FROM W4 2/4
FSC4
IBF
VINL
+5V
VR702
PLL POS1
+5V
VR703
PLL POS2
IC707
IC708
BUFFER
IC708
COMPALATOR
TP701
D706
C731, L705
OSC (13.5MHz)
VL701
NSTD OFFS
IC709
D710
IC704
FRAME PULSE
H PULSE
IC791
PULSE GEN
H
FROM W4 3/4
COMP. SYNC2
(FOR CTCM)
Q707~Q710
BUFFER
VR701
SYNC 0
IC703
EQ PULSE ELIMINATION
+5V
IC704
IC705
C717, R706
TRAPEZOID WAVE GEN
IC706, Q701
BUFFER
IC707, C721
SAMPLER
IC708
BUFFER
IC708
COMPARATOR
IC707
COMPARATOR SET UP SW
TP702
D707
X701
OSC (13.5MHz)
Q703, Q704
OSC SW
Q702
BUFFER
IC709
GATE
D711
IC711
IC709
IC711
(SYSCON) B1–R17B—CN50–16A—CN20–16A
R38B
VIDEO IN
(SYSCON) B1–R20A—CN50–12A—CN20–12A
R35B
STD
IC713
MIDW
PCST
TP703
VINL
VINL
IDCI
IDCO
CONTROL PULSE GEN
HBK
HBKI
RSTH
IC710
RST PULSE GEN
RSTV
VR704
CSY POS
(CTCM 13.5MHz PULSE GEN)
WRST
WE
RRST
RER
REB
CSY
FRM
H1
CCLP
CBF
YBF
YBU
CBU
YISC
CBK
YBK
AO
CK
Q705
IC711
TP704
(2.7MHz GEN)
IC714
COUNTER
IC712
V SEP

OCK DIAGRAM 4/4 (CONTROL PULSE GENERATION SECTION) [FOR AU-65H NTSC]

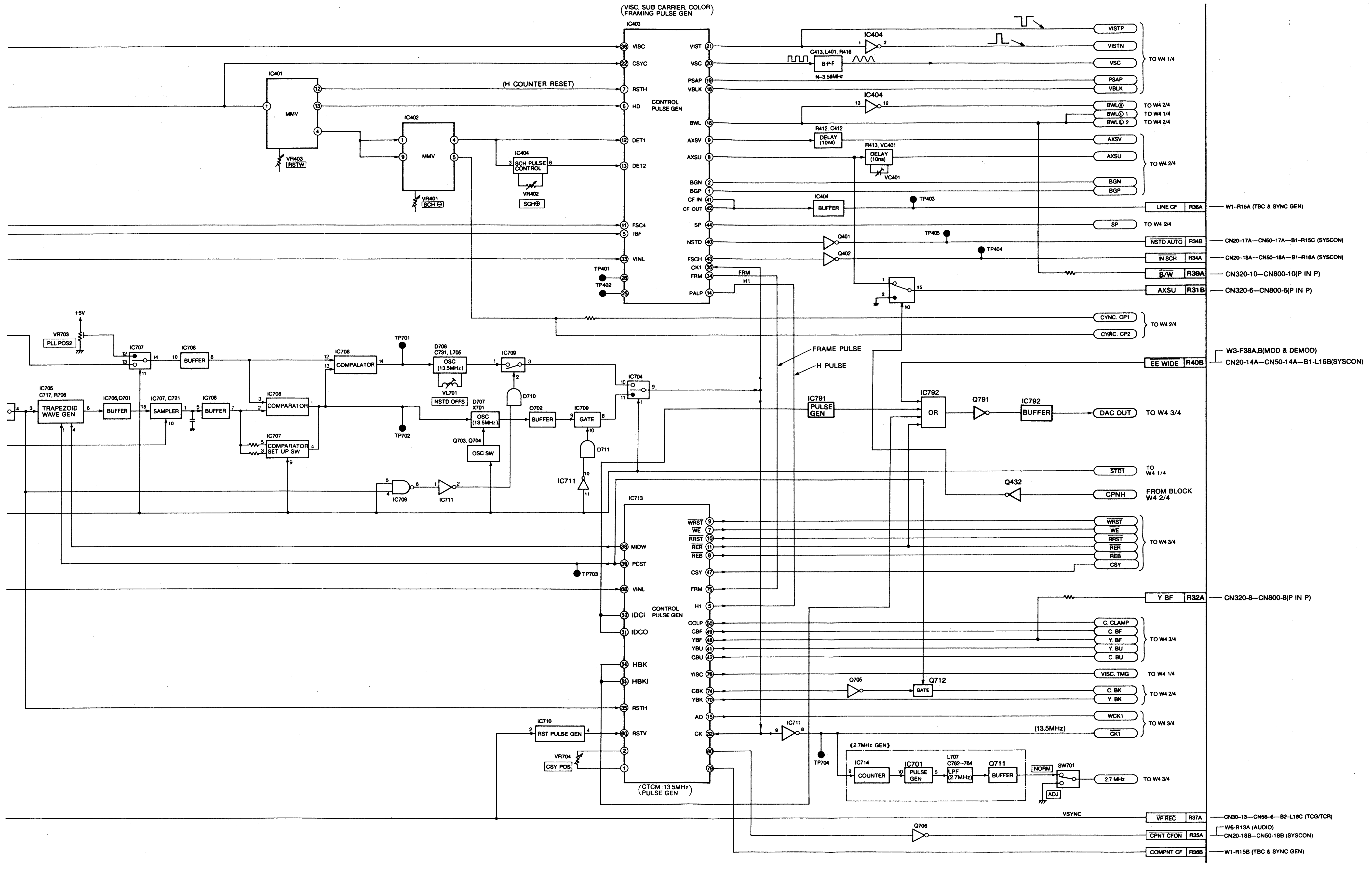
(VISC, SUB CARRIER, COLOR FRAMING PULSE GEN)
IC403
VISC
CSYC
RSTH
HD
CONTROL PULSE GEN
DET1
DET2
FSC4
IBF
VINL
VIST
VSC
PSAP
VBLK
BWL
AXSV
AXSU
BGN
BGP
CF IN
CF OUT
SP
NSTD
FSCH
CK1
FRM
PALP
IC401
MMV
VR403 RSTW
(H COUNTER RESET)
IC402
MMV
VR401 SCH ⊖
IC404
SCH PULSE CONTROL
VR402 SCH⊕
TP401
TP402
IC404
C413, L401, R416
B·P·F
N-3.58MHz
R412, C412
DELAY (10ns)
R413, VC401
DELAY (10ns)
VC401
IC404
BUFFER
TP403
TP405
Q401
Q402
TP404
FRM
H1
VISTP
VISTN
VSC
PSAP
VBLK
TO W4 1/4
BWL⊕
BWL⊖ 1
BWL⊖ 2
TO W4 2/4
TO W4 1/4
TO W4 2/4
AXSV
AXSU
BGN
BGP
TO W4 2/4
LINE CF R35A
W1-R15A (TBC & SYNC GEN)
SP
TO W4 2/4
NSTD AUTO R34B
CN20-17A—CN50-17A—B1-R15C (SYSCON)
IN SCH R34A
CN20-18A—CN50-18A—B1-R16A (SYSCON)
B/W R39A
CN320-10—CN800-10(P IN P)
AXSU R31B
CN320-6—CN800-6(P IN P)
CYNC. CP1
CYAC. CP2
TO W4 2/4
EE WIDE R40B
W3-F38A,B(MOD & DEMOD)
CN20-14A—CN50-14A—B1-L16B(SYSCON)
FRAME PULSE
H PULSE
+5V
VR703 PLL POS2
IC707
IC708 BUFFER
IC708 COMPALATOR
TP701
D708 C731, L705
OSC (13.5MHz)
VL701 NSTD OFFS
IC709
D710
IC704
IC705 C717, R708
TRAPEZOID WAVE GEN
IC706,Q701 BUFFER
IC707, C721 SAMPLER
IC708 BUFFER
IC708 COMPARATOR
IC707 COMPARATOR SET UP SW
TP702
D707 X701
OSC (13.5MHz)
Q703, Q704 OSC SW
Q702 BUFFER
IC709 GATE
D711
IC711
IC709
IC711
IC791 PULSE GEN
IC792 OR
Q791
IC792 BUFFER
DAC OUT
TO W4 3/4
STD1
TO W4 1/4
Q432
CPNH
FROM BLOCK W4 2/4
IC713
MIDW
PCST
VINL
CONTROL PULSE GEN
IDCI
IDCO
HBK
HBKI
RSTH
RSTV
TP703
WRST
WE
RRST
RER
REB
CSY
FRM
H1
CCLP
CBF
YBF
YBU
CBU
YISC
CBK
YBK
AO
CK
WRST
WE
RRST
RER
REB
CSY
TO W4 3/4
Y BF R32A
CN320-8—CN800-8(P IN P)
C. CLAMP
C. BF
Y. BF
Y. BU
C. BU
TO W4 3/4
VISC. TMG
TO W4 1/4
Q705
Q712 GATE
C. BK
Y. BK
TO W4 2/4
WCK1
(13.5MHz)
CK1
TO W4 3/4
IC710 RST PULSE GEN
VR704 CSY POS
(CTCM : 13.5MHz PULSE GEN)
IC711
TP704
(2.7MHz GEN)
IC714 COUNTER
IC701 PULSE GEN
L707 C762–764 LPF (2.7MHz)
Q711 BUFFER
NORM
SW701
ADJ
2.7 MHz
TO W4 3/4
VSYNC
VP REC R37A
CN30-13—CN56-6—B2-L18C (TCG/TCR)
Q706
CPNT CFON R35A
W6-R13A (AUDIO)
CN20-18B—CN50-18B (SYSCON)
COMPNT CF R36B
W1-R15B (TBC & SYNC GEN)

REVERSE SIDE DEC & CTCM
BLOCK DIAG

W4 (DECODER) BLOCK DIAGRAM 1/4 (A/D SECTION) [FOR AU-65H PAL]

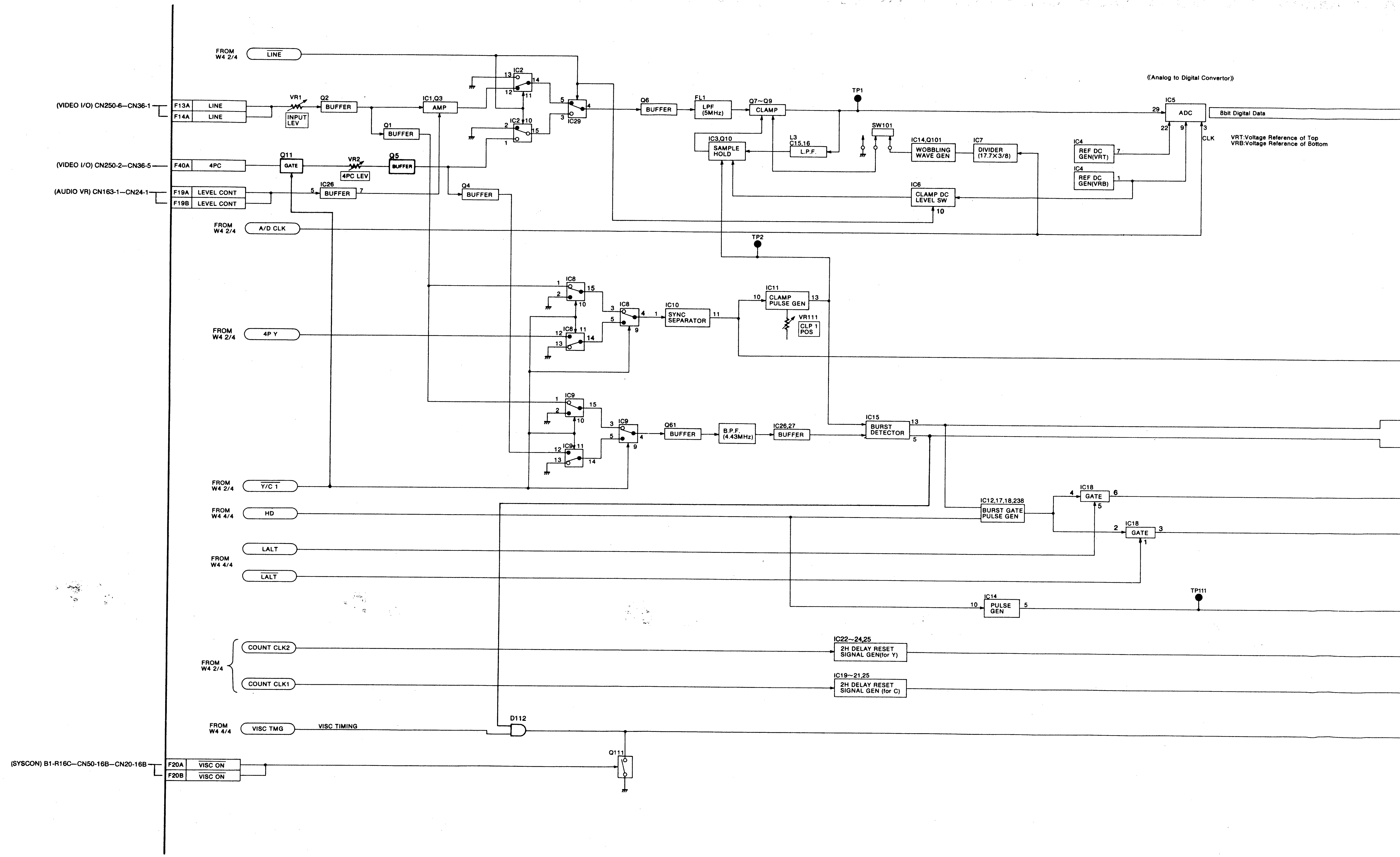

FROM W4 2/4
LINE
(VIDEO I/O) CN250-6—CN36-1
F13A LINE
F14A LINE
VR1
INPUT LEV
Q2
BUFFER
IC1,Q3
AMP
Q1
BUFFER
IC2
13
14
12
11
IC2
2
10
15
1
5
4
3
IC29
(VIDEO I/O) CN250-2—CN36-5
F40A 4PC
Q11
GATE
VR2
4PC LEV
Q5
BUFFER
(AUDIO VR) CN163-1—CN24-1
F19A LEVEL CONT
F19B LEVEL CONT
IC26
BUFFER
Q4
BUFFER
FROM W4 2/4
A/D CLK
Q6
BUFFER
FL1
LPF (5MHz)
Q7~Q9
CLAMP
TP1
IC3,Q10
SAMPLE HOLD
L3 C15,16
L.P.F.
SW101
IC14,Q101
WOBBLING WAVE GEN
IC7
DIVIDER (17.7×3/8)
IC6
CLAMP DC LEVEL SW
10
《Analog to Digital Convertor》
IC5
ADC
29
22
9
3
CLK
8bit Digital Data
IC4
REF DC GEN(VRT)
7
IC4
REF DC GEN(VRB)
1
VRT:Voltage Reference of Top
VRB:Voltage Reference of Bottom
TP2
IC8
1
2
15
10
3
IC8
4
5
9
12
IC8
11
13
14
FROM W4 2/4
4P Y
IC10
SYNC SEPARATOR
1
11
IC11
CLAMP PULSE GEN
10
13
VR111
CLP 1 POS
IC9
1
2
15
10
3
IC9
4
5
9
12
IC9
11
13
14
Q61
BUFFER
B.P.F. (4.43MHz)
IC26,27
BUFFER
IC15
BURST DETECTOR
13
5
FROM W4 2/4
Y/C 1
FROM W4 4/4
HD
IC12,17,18,238
BURST GATE PULSE GEN
IC18
4
GATE
6
5
IC18
2
GATE
3
1
FROM W4 4/4
LALT
LALT
IC14
10
PULSE GEN
5
TP111
FROM W4 2/4
COUNT CLK2
COUNT CLK1
IC22~24,25
2H DELAY RESET SIGNAL GEN(for Y)
IC19~21,25
2H DELAY RESET SIGNAL GEN (for C)
FROM W4 4/4
VISC TMG
VISC TIMING
D112
Q111
(SYSCON) B1-R16C—CN50-16B—CN20-16B
F20A VISC ON
F20B VISC ON

A/D SECTION) [FOR AU-65H PAL]

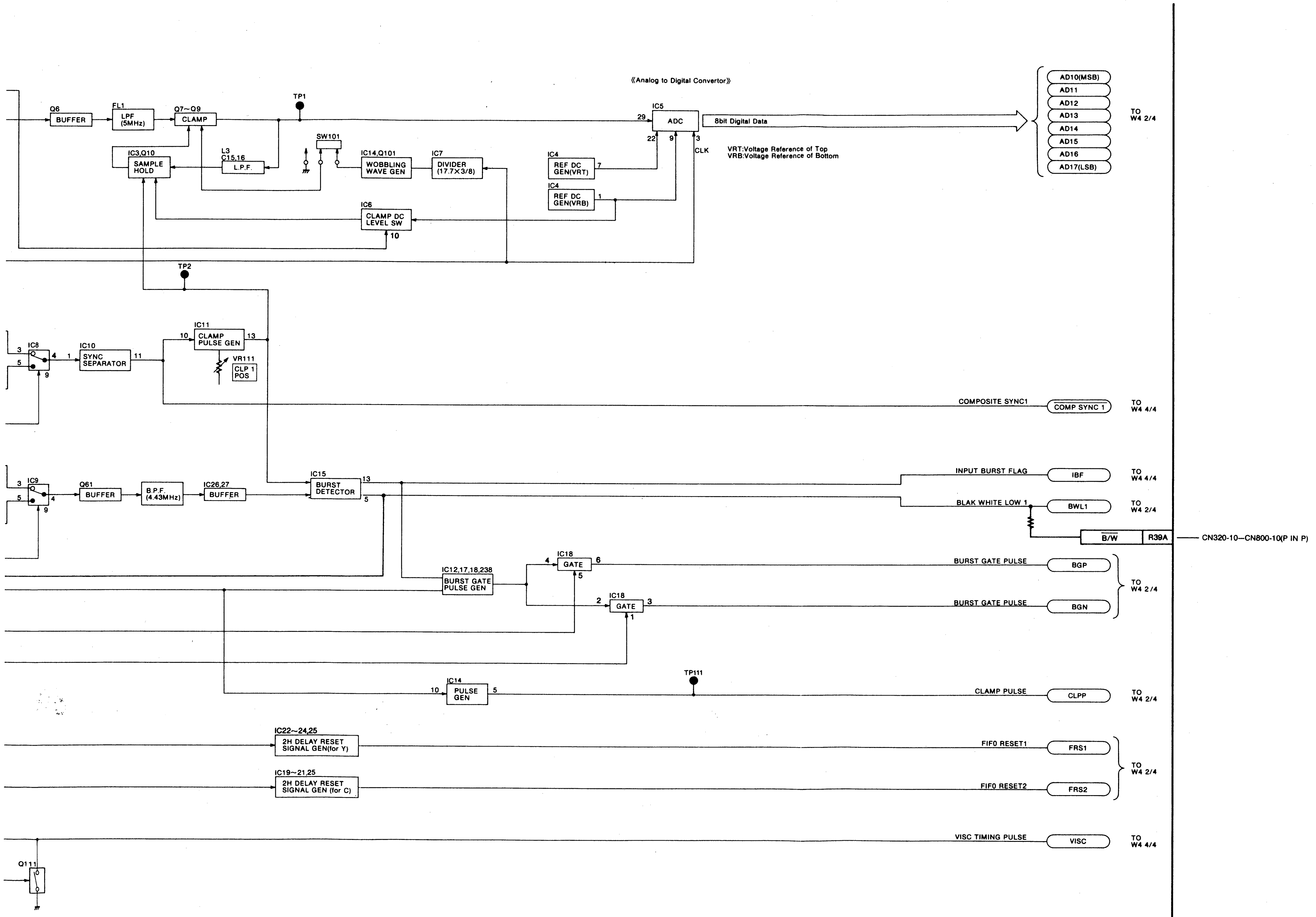

《Analog to Digital Convertor》
Q6
BUFFER
FL1
LPF (5MHz)
Q7~Q9
CLAMP
TP1
IC5
ADC
29
22
9
3
CLK
8bit Digital Data
VRT:Voltage Reference of Top
VRB:Voltage Reference of Bottom
SW101
IC3,Q10
SAMPLE HOLD
L3 C15,16
L.P.F.
IC14,Q101
WOBBLING WAVE GEN
IC7
DIVIDER (17.7×3/8)
IC4
REF DC GEN(VRT)
7
IC4
REF DC GEN(VRB)
1
IC6
CLAMP DC LEVEL SW
10
AD10(MSB)
AD11
AD12
AD13
AD14
AD15
AD16
AD17(LSB)
TO W4 2/4
TP2
IC11
CLAMP PULSE GEN
10
13
VR111
CLP 1 POS
IC8
3
5
4
9
1
IC10
SYNC SEPARATOR
11
COMPOSITE SYNC1
COMP SYNC 1
TO W4 4/4
IC9
3
5
4
9
Q61
BUFFER
B.P.F. (4.43MHz)
IC26,27
BUFFER
IC15
BURST DETECTOR
13
5
INPUT BURST FLAG
IBF
TO W4 4/4
BLAK WHITE LOW 1
BWL1
TO W4 2/4
B/W
R39A
CN320-10—CN800-10(P IN P)
IC12,17,18,238
BURST GATE PULSE GEN
IC18
4
GATE
6
5
IC18
2
GATE
3
1
BURST GATE PULSE
BGP
BURST GATE PULSE
BGN
TO W4 2/4
TP111
IC14
10
PULSE GEN
5
CLAMP PULSE
CLPP
TO W4 2/4
IC22~24,25
2H DELAY RESET SIGNAL GEN(for Y)
FIFO RESET1
FRS1
IC19~21,25
2H DELAY RESET SIGNAL GEN (for C)
FIFO RESET2
FRS2
TO W4 2/4
VISC TIMING PULSE
VISC
TO W4 4/4
Q111

W4 (DECODER) BLOCK DIAGRAM 2/4 (DIGITAL DECODER) [FOR AU-65H PAL]

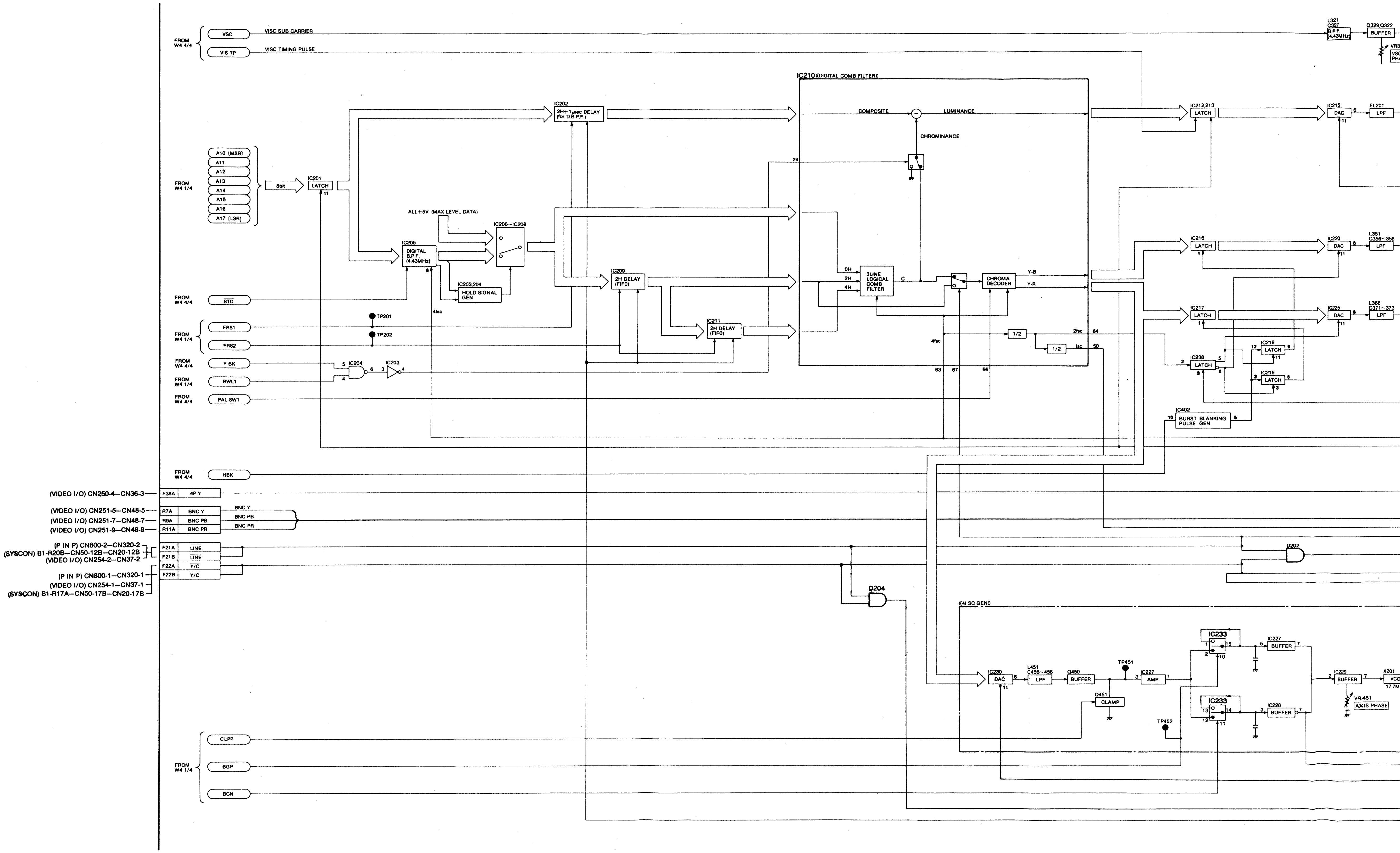
FROM W4 4/4
VSC
VIS TP
VISC SUB CARRIER
VISC TIMING PULSE
L321
C327
B.P.F. (4.43MHz)
Q329,Q322
BUFFER
VR3
VSC PH
FROM W4 1/4
A10 (MSB)
A11
A12
A13
A14
A15
A16
A17 (LSB)
8bit
IC201
LATCH
11
IC202
2H+1μsec DELAY (for D.B.P.F.)
ALL+5V (MAX LEVEL DATA)
IC205
DIGITAL B.P.F. (4.43MHz)
8
IC206~IC208
IC203,204
HOLD SIGNAL GEN
4fsc
IC209
2H DELAY (FIFO)
IC211
2H DELAY (FIFO)
TP201
TP202
FROM W4 4/4
STD
FROM W4 1/4
FRS1
FRS2
FROM W4 4/4
Y BK
FROM W4 1/4
BWL1
FROM W4 4/4
PAL SW1
5
IC204
4
6
3
IC203
4
IC210 《DIGITAL COMB FILTER》
COMPOSITE
LUMINANCE
CHROMINANCE
24
0H
2H
4H
3LINE LOGICAL COMB FILTER
C
CHROMA DECODER
Y-B
Y-R
4fsc
1/2
2fsc
64
1/2
fsc
50
63
67
66
IC212,213
LATCH
IC215
DAC
6
11
FL201
LPF
IC216
LATCH
1
IC220
DAC
6
11
L351
C356~358
LPF
IC217
LATCH
1
IC225
DAC
6
11
L366
C371~373
LPF
IC238
LATCH
2
5
6
3
IC219
LATCH
12
9
11
IC219
LATCH
2
5
3
IC402
BURST BLANKING PULSE GEN
10
5
FROM W4 4/4
HBK
(VIDEO I/O) CN250-4—CN36-3
(VIDEO I/O) CN251-5—CN48-5
(VIDEO I/O) CN251-7—CN48-7
(VIDEO I/O) CN251-9—CN48-9
(P IN P) CN800-2—CN320-2
(SYSCON) B1-R20B—CN50-12B—CN20-12B
(VIDEO I/O) CN254-2—CN37-2
(P IN P) CN800-1—CN320-1
(VIDEO I/O) CN254-1—CN37-1
(SYSCON) B1-R17A—CN50-17B—CN20-17B
F38A
4P Y
R7A
BNC Y
R9A
BNC PB
R11A
BNC PR
BNC Y
BNC PB
BNC PR
F21A
$\overline{\text{LINE}}$
F21B
$\overline{\text{LINE}}$
F22A
$\overline{\text{Y/C}}$
F22B
$\overline{\text{Y/C}}$
D202
D204
《4f SC GEN》
IC230
DAC
6
11
L451
C456~458
LPF
Q450
BUFFER
Q451
CLAMP
TP451
3
IC227
AMP
1
TP452
IC233
1
2
15
10
IC233
13
12
14
11
IC227
5
BUFFER
7
IC228
3
BUFFER
7
IC229
2
BUFFER
7
X201
VCO
17.7M
VR451
AXIS PHASE
FROM W4 1/4
CLPP
BGP
BGN

2/4 (DIGITAL DECODER) [FOR AU-65H PAL]

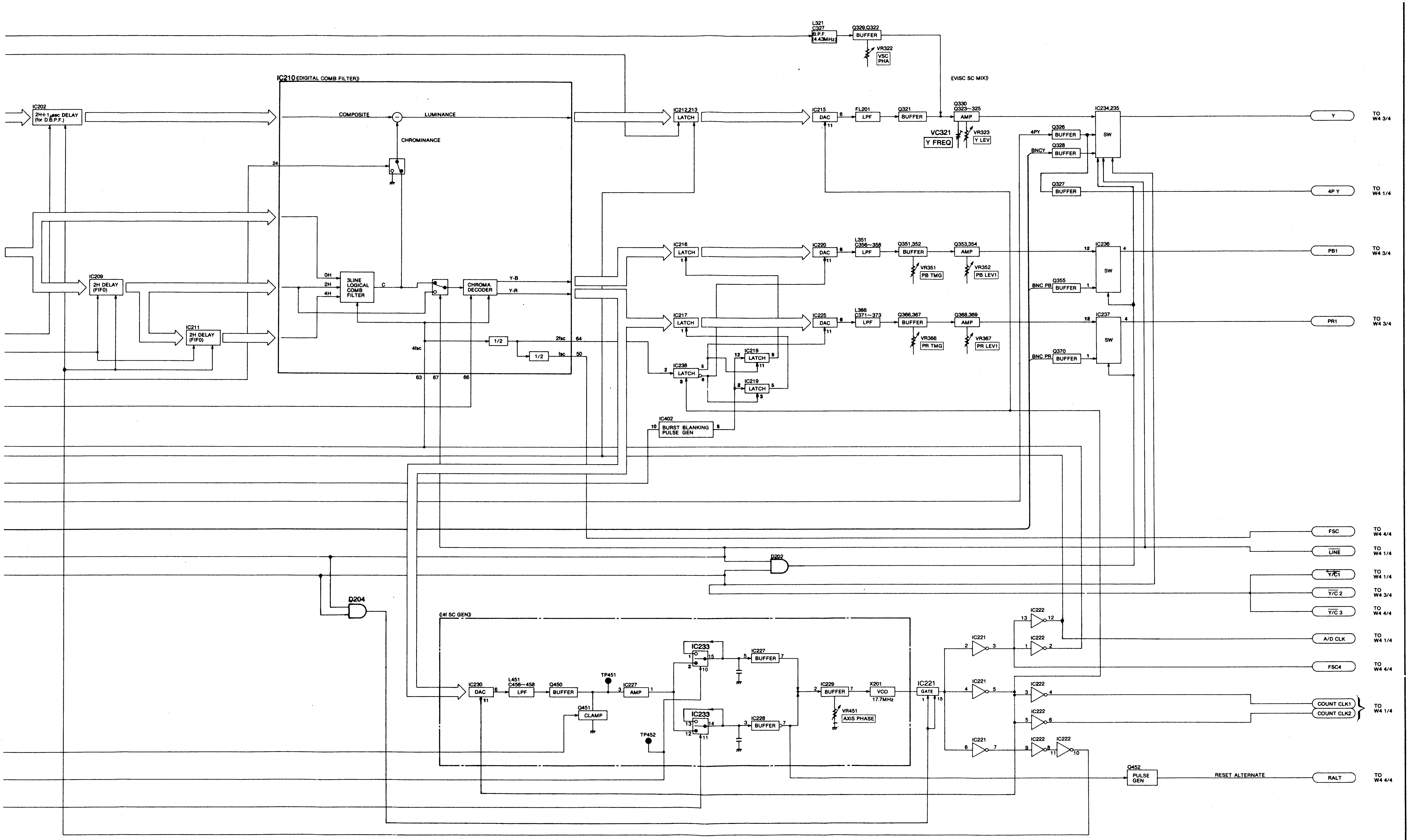
L321
C327
B.P.F
(4.43MHz)
Q329,Q322
BUFFER
VR322
VSC PHA
IC210 (DIGITAL COMB FILTER)
(VISC SC MIX)
IC202
2H+1μsec DELAY (for D.B.P.F.)
COMPOSITE
LUMINANCE
CHROMINANCE
24
IC212,213
LATCH
IC215
DAC
FL201
LPF
Q321
BUFFER
Q330
Q323~325
AMP
VC321
Y FREQ
VR323
Y LEV
IC234,235
SW
4PY
Q326
BUFFER
BNCY
Q328
BUFFER
Q327
BUFFER
Y
4P Y
TO W4 3/4
TO W4 1/4
IC209
2H DELAY (FIFO)
IC211
2H DELAY (FIFO)
0H
2H
4H
3LINE LOGICAL COMB FILTER
C
CHROMA DECODER
Y-B
Y-R
IC216
LATCH
IC220
DAC
L351
C356~358
LPF
Q351,352
BUFFER
VR351
PB TMG
Q353,354
AMP
VR352
PB LEV1
IC236
SW
BNC PB
Q355
BUFFER
PB1
TO W4 3/4
IC217
LATCH
IC225
DAC
L366
C371~373
LPF
Q366,367
BUFFER
VR366
PR TMG
Q368,369
AMP
VR367
PR LEV1
IC237
SW
BNC PR
Q370
BUFFER
PR1
TO W4 3/4
4fsc
1/2
1/2
2fsc
fsc
64
50
63
67
66
IC238
LATCH
IC219
LATCH
IC219
LATCH
IC402
BURST BLANKING PULSE GEN
10
FSC
TO W4 4/4
LINE
TO W4 1/4
D202
Y/C1
TO W4 1/4
Y/C 2
TO W4 3/4
Y/C 3
TO W4 4/4
D204
(4f SC GEN)
IC233
IC227
BUFFER
IC230
DAC
L451
C456~458
LPF
Q450
BUFFER
TP451
IC227
AMP
Q451
CLAMP
TP452
IC233
IC228
BUFFER
IC229
BUFFER
VR451
AXIS PHASE
X201
VCO
17.7MHz
IC221
GATE
IC221
IC222
IC222
IC221
IC222
IC222
IC221
IC222
IC222
A/D CLK
TO W4 1/4
FSC4
TO W4 4/4
COUNT CLK1
COUNT CLK2
TO W4 1/4
Q452
PULSE GEN
RESET ALTERNATE
RALT
TO W4 4/4

W4 (DECODER) BLOCK DIAGRAM 3/4 (CTCM SECTION) [FOR AU-65H PAL]

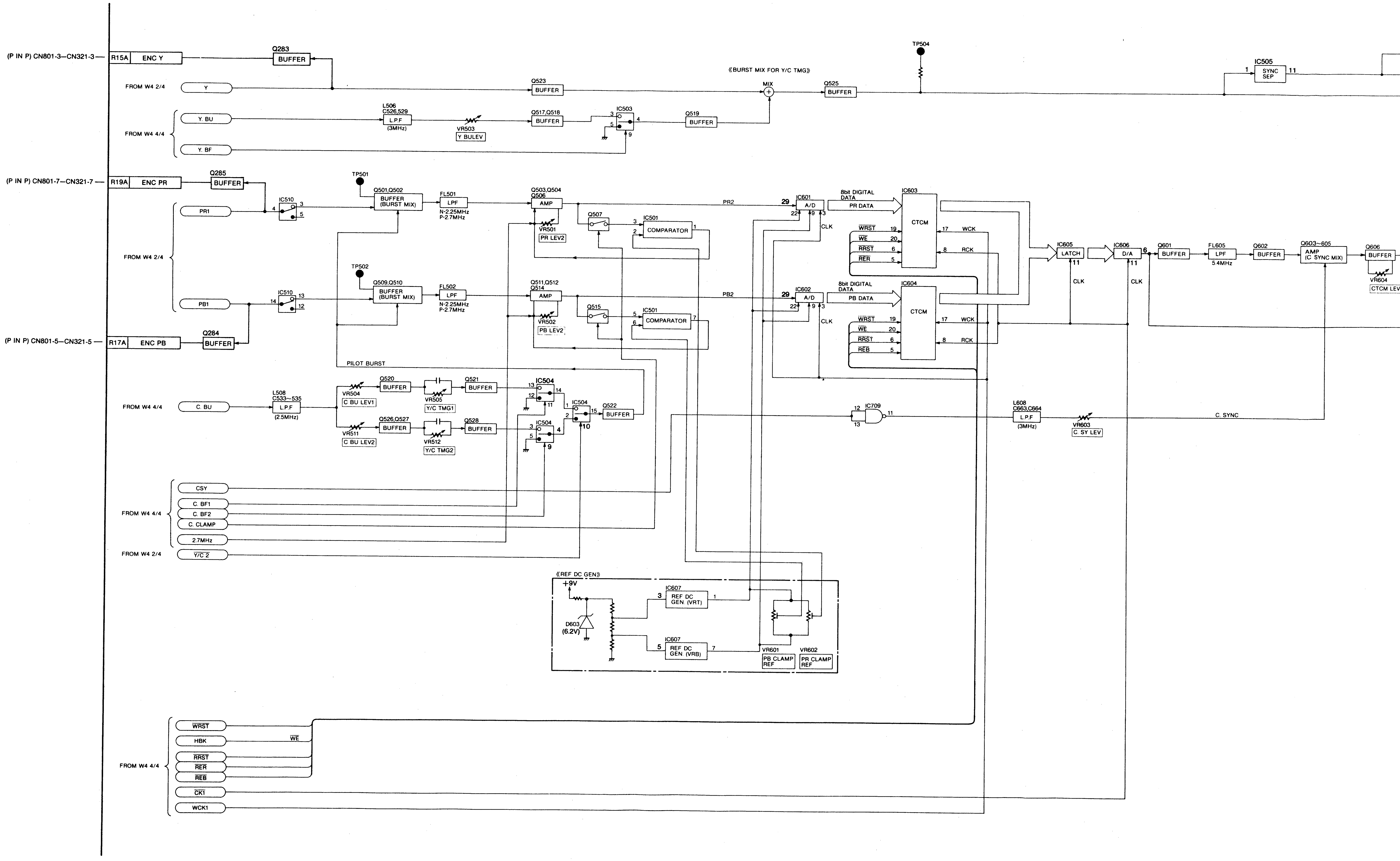
(P IN P) CN801-3—CN321-3
R15A
ENC Y
Q283
BUFFER
FROM W4 2/4
Y
Q523
BUFFER
《BURST MIX FOR Y/C TMG》
MIX
Q525
BUFFER
TP504
IC505
SYNC SEP
1
11
FROM W4 4/4
Y. BU
Y. BF
L506
C526,529
L.P.F
(3MHz)
VR503
Y BULEV
Q517,Q518
BUFFER
IC503
Q519
BUFFER
(P IN P) CN801-7—CN321-7
R19A
ENC PR
Q285
BUFFER
TP501
IC510
Q501,Q502
BUFFER
(BURST MIX)
FL501
LPF
N-2.25MHz
P-2.7MHz
Q503,Q504
Q506
AMP
VR501
PR LEV2
Q507
IC501
COMPARATOR
PR2
IC601
A/D
8bit DIGITAL DATA
PR DATA
IC603
CTCM
CLK
WRST
WE
RRST
RER
WCK
RCK
IC605
LATCH
IC606
D/A
Q601
BUFFER
FL605
LPF
5.4MHz
Q602
BUFFER
Q603~605
AMP
(C SYNC MIX)
Q606
BUFFER
VR604
CTCM LEV
FROM W4 2/4
PR1
PB1
TP502
Q509,Q510
BUFFER
(BURST MIX)
FL502
LPF
N-2.25MHz
P-2.7MHz
Q511,Q512
Q514
AMP
VR502
PB LEV2
Q515
IC501
COMPARATOR
PB2
IC602
A/D
8bit DIGITAL DATA
PB DATA
IC604
CTCM
REB
(P IN P) CN801-5—CN321-5
R17A
ENC PB
Q284
BUFFER
PILOT BURST
FROM W4 4/4
C. BU
L508
C533~535
L.P.F
(2.5MHz)
VR504
C BU LEV1
Q520
BUFFER
VR505
Y/C TMG1
Q521
BUFFER
IC504
IC504
Q522
BUFFER
VR511
C BU LEV2
Q526,Q527
BUFFER
VR512
Y/C TMG2
Q528
BUFFER
IC504
IC709
L608
C663,C664
L.P.F
(3MHz)
VR603
C. SY LEV
C. SYNC
FROM W4 4/4
CSY
C. BF1
C. BF2
C. CLAMP
2.7MHz
FROM W4 2/4
Y/C 2
《REF DC GEN》
+9V
D603
(6.2V)
IC607
REF DC GEN (VRT)
IC607
REF DC GEN (VRB)
VR601
PB CLAMP REF
VR602
PR CLAMP REF
FROM W4 4/4
WRST
HBK
WE
RRST
RER
REB
CK1
WCK1

M SECTION) [FOR AU-65H PAL]

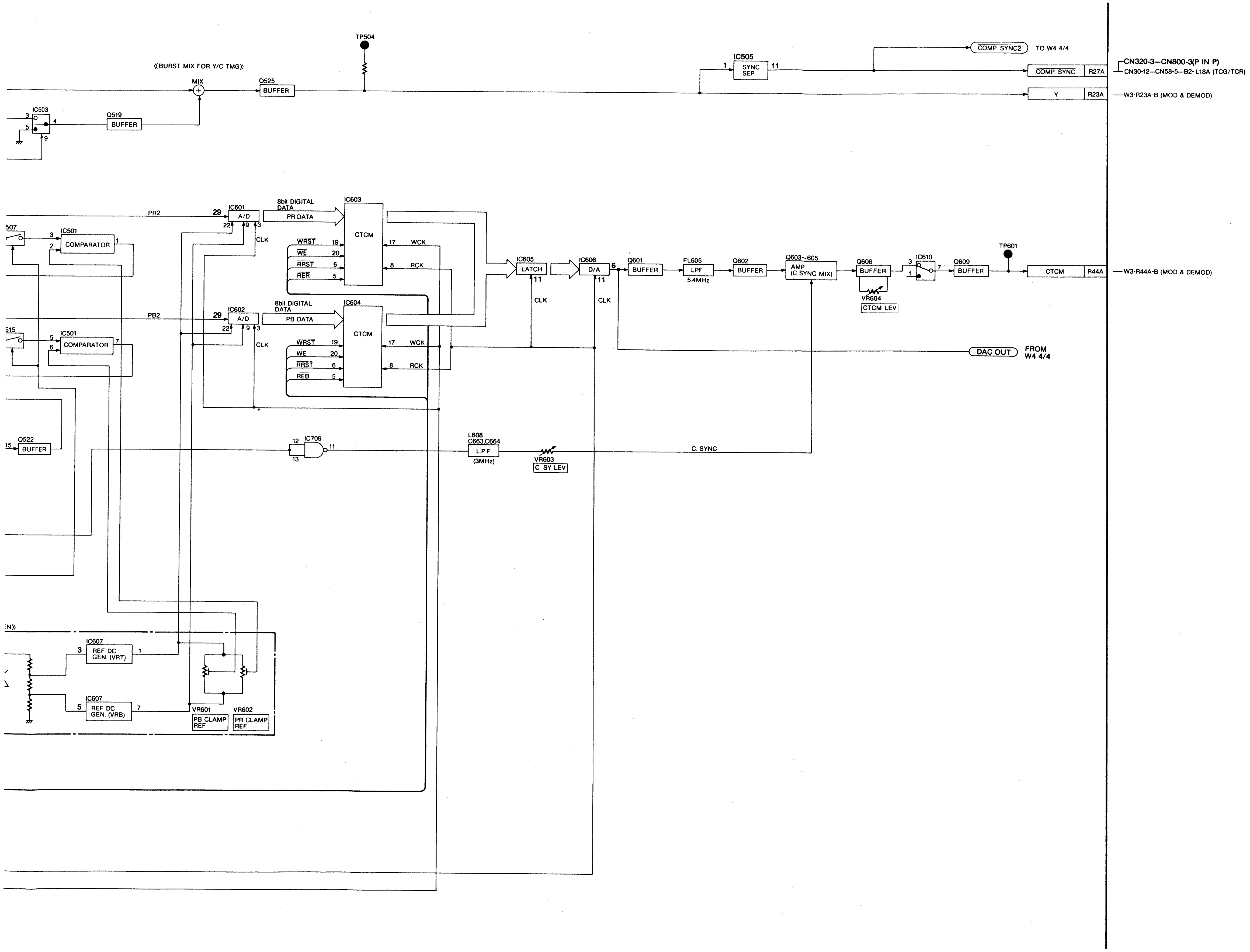
TP504
《BURST MIX FOR Y/C TMG》
MIX
Q525
BUFFER
IC503
Q519
BUFFER
IC505
SYNC SEP
COMP. SYNC2
TO W4 4/4
COMP. SYNC
R27A
Y
R23A
CN320-3—CN800-3(P IN P)
CN30-12—CN58-5—B2- L18A (TCG/TCR)
W3-R23A-B (MOD & DEMOD)
PR2
IC601
A/D
8bit DIGITAL DATA
PR DATA
IC603
CTCM
WRST
WE
RRST
RER
WCK
RCK
CLK
507
IC501
COMPARATOR
PB2
IC602
A/D
8bit DIGITAL DATA
PB DATA
IC604
CTCM
WRST
WE
RRST
REB
515
IC501
COMPARATOR
IC605
LATCH
IC606
D/A
CLK
Q601
BUFFER
FL605
LPF
5.4MHz
Q602
BUFFER
Q603~605
AMP
(C SYNC MIX)
Q606
BUFFER
VR604
CTCM LEV
IC610
Q609
BUFFER
TP601
CTCM
R44A
W3-R44A-B (MOD & DEMOD)
DAC OUT
FROM W4 4/4
Q522
BUFFER
IC709
L608
C663,C664
L.P.F
(3MHz)
VR603
C SY LEV
C. SYNC
IC607
REF DC GEN. (VRT)
IC607
REF DC GEN. (VRB)
VR601
PB CLAMP REF
VR602
PR CLAMP REF

W4 (DECODER) BLOCK DIAGRAM 4/4 (CONTROL PULSE GENERATION [FOR

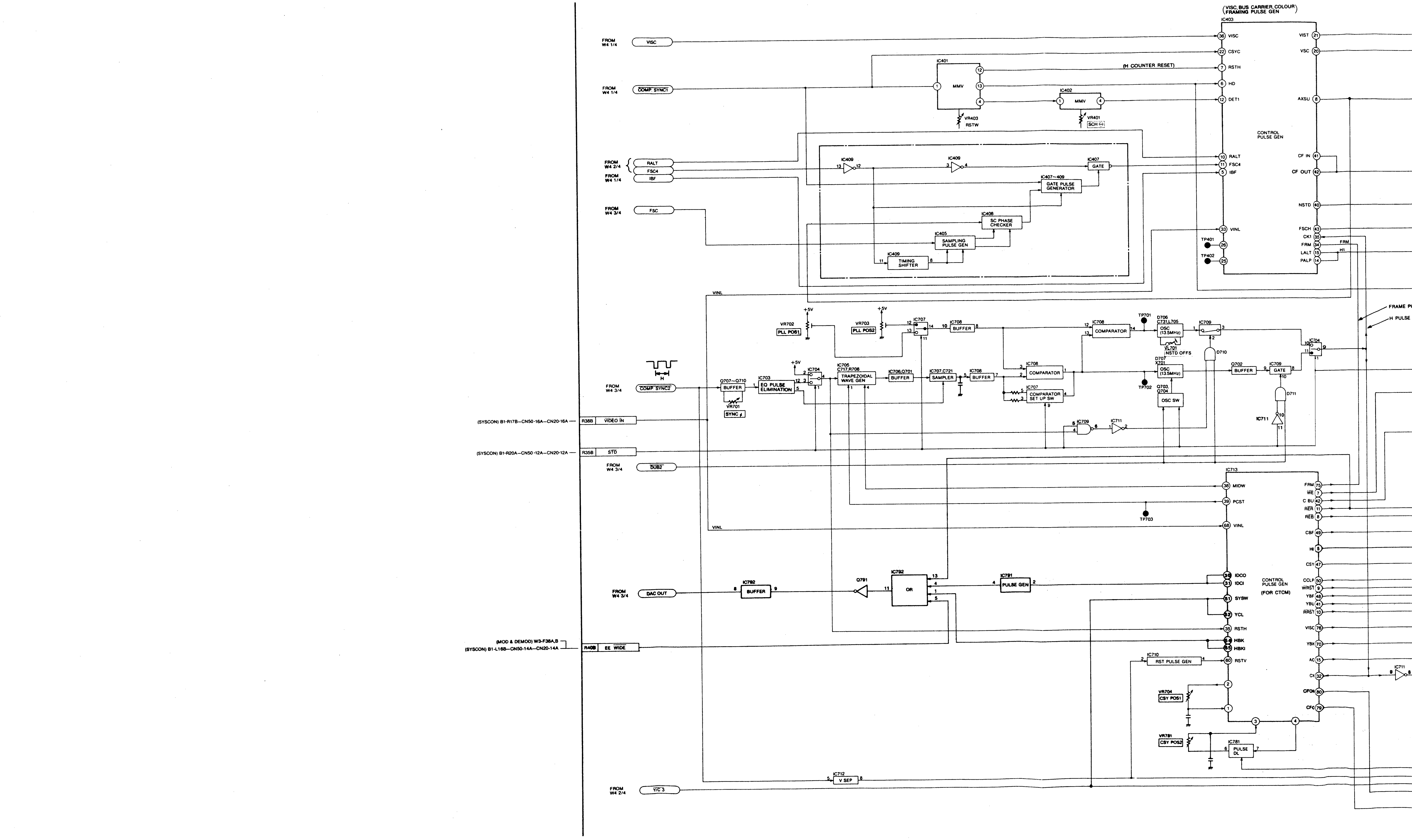
(VISC, BUS CARRIER, COLOUR FRAMING PULSE GEN)
IC403
FROM W4 1/4
VISC
FROM W4 1/4
COMP. SYNC1
IC401
MMV
VR403
RSTW
IC402
MMV
VR401
SCH ⊖
(H COUNTER RESET)
36 VISC
22 CSYC
7 RSTH
6 HD
12 DET1
10 RALT
11 FSC4
5 IBF
33 VINL
TP401
26
TP402
25
CONTROL PULSE GEN
VIST 21
VSC 20
AXSU 8
CF IN 41
CF OUT 42
NSTD 40
FSCH 43
CK1 35
FRM 34
LALT 15
PALP 14
FRM
H1
FROM W4 2/4
RALT
FSC4
FROM W4 1/4
IBF
FROM W4 3/4
FSC
IC409
IC409
IC407
GATE
IC407~409
GATE PULSE GENERATOR
IC406
SC PHASE CHECKER
IC405
SAMPLING PULSE GEN
IC409
TIMING SHIFTER
VINL
+5V
VR702
PLL POS1
+5V
VR703
PLL POS2
IC707
IC708
BUFFER
IC708
COMPARATOR
TP701
D706
C731,L705
OSC (13.5MHz)
VL701
NSTD OFFS
IC709
D710
IC704
FRAME P
H PULSE
H
FROM W4 3/4
COMP. SYNC2
Q707~Q710
BUFFER
VR701
SYNC
IC703
EQ PULSE ELIMINATION
+5V
IC704
IC705
C717,R708
TRAPEZOIDAL WAVE GEN
IC706,Q701
BUFFER
IC707,C721
SAMPLER
IC708
BUFFER
IC708
COMPARATOR
IC707
COMPARATOR SET UP SW
D707
X701
OSC (13.5MHz)
TP702
Q703, Q704
OSC SW
Q702
BUFFER
IC709
GATE
D711
IC711
IC709
IC711
(SYSCON) B1-R17B—CN50-16A—CN20-16A
R38B
VIDEO IN
(SYSCON) B1-R20A—CN50-12A—CN20-12A
R35B
STD
FROM W4 3/4
DUB2
IC713
38 MIDW
39 PCST
TP703
68 VINL
VINL
FRM 75
WE 7
C BU 42
RER 11
REB 8
CBF 49
HI 5
CSY 47
CCLP 50
WRST 9
YBF 48
YBU 41
RRST 10
VISC 76
YBK 70
AO 15
CK 32
CFON 80
CFO 79
IC711
FROM W4 3/4
DAC OUT
IC792
BUFFER
Q791
IC792
OR
IC791
PULSE GEN
30 IDCO
31 IDCI
CONTROL PULSE GEN
(FOR CTCM)
51 SYSW
52 YCL
35 RSTH
64 HBK
65 HBKI
60 RSTV
(MOD & DEMOD) W3-F38A,B
(SYSCON) B1-L16B—CN50-14A—CN20-14A
R40B
EE WIDE
IC710
RST PULSE GEN
VR704
CSY POS1
VR781
CSY POS2
IC781
PULSE DL
IC712
V SEP
FROM W4 2/4
Y/C 3

W4 (DECODER) BLOCK DIAGRAM 4/4 (CONTROL PULSE GENERATION [FOR AU-65H PAL]

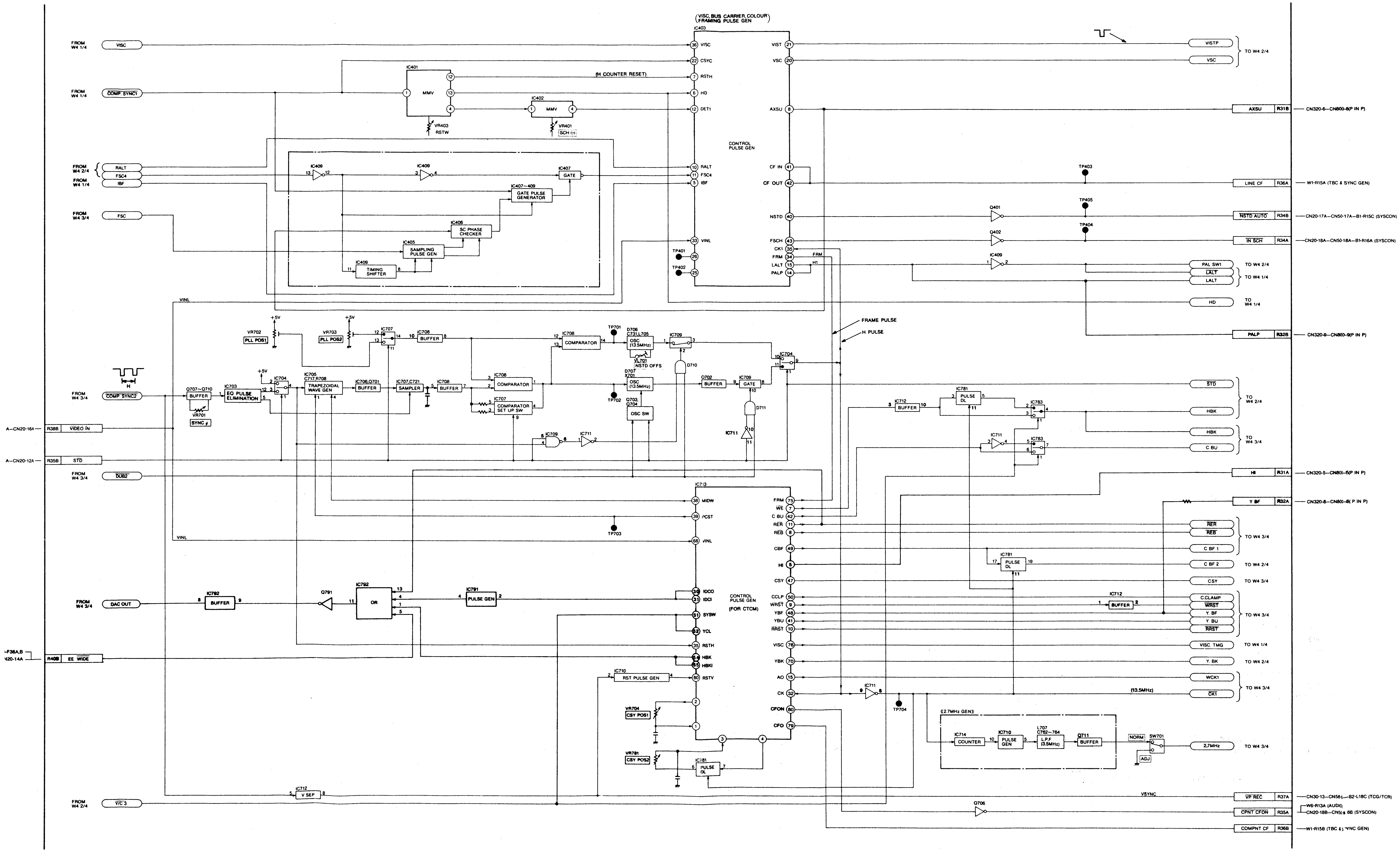
FROM W4 1/4
VISC
COMP SYNC1
FROM W4 2/4
RALT
FSC4
FROM W4 1/4
IBF
FROM W4 3/4
FSC
(VISC, BUS CARRIER, COLOUR FRAMING PULSE GEN)
IC403
VISC
CSYC
RSTH
HD
DET1
VIST
VSC
AXSU
CONTROL PULSE GEN
CF IN
CF OUT
NSTD
FSCH
CK1
FRM
LALT
PALP
IC401
MMV
VR403
RSTW
(H COUNTER RESET)
IC402
MMV
VR401
SCH
IC409
IC407
GATE
IC407~409
GATE PULSE GENERATOR
IC406
SC PHASE CHECKER
IC405
SAMPLING PULSE GEN
IC409
TIMING SHIFTER
VINL
TP401
TP402
TP403
TP405
TP404
Q401
Q402
IC409
FRM
H1
VISTP
VSC
TO W4 2/4
AXSU
R31B
CN320-6—CN800-6(P IN P)
LINE CF
R36A
W1-R15A (TBC & SYNC GEN)
NSTD AUTO
R34B
CN20-17A—CN50-17A—B1-R15C (SYSCON)
IN SCH
R34A
CN20-18A—CN50-18A—B1-R16A (SYSCON)
PAL SW1
TO W4 2/4
LALT
LALT
TO W4 1/4
HD
TO W4 1/4
PALP
R32B
CN320-9—CN800-9(P IN P)
FRAME PULSE
H PULSE
+5V
VR702
PLL POS1
+5V
VR703
PLL POS2
IC707
IC708
BUFFER
IC708
COMPARATOR
TP701
D706
C731,L705
OSC (13.5MHz)
VL701
NSTD OFFS
IC709
D710
IC704
FROM W4 3/4
COMP SYNC2
H
Q707~Q710
BUFFER
VR701
SYNC
IC703
EQ PULSE ELIMINATION
+5V
IC704
IC705
C717,R708
TRAPEZOIDAL WAVE GEN
IC706,Q701
BUFFER
IC707,C721
SAMPLER
IC708
BUFFER
IC708
COMPARATOR
IC707
COMPARATOR SET UP SW
D707
X701
OSC (13.5MHz)
TP702
Q703, Q704
OSC SW
Q702
BUFFER
IC709
GATE
D711
IC711
IC709
IC711
A—CN20-16A
R38B
VIDEO IN
A—CN20-12A
R35B
STD
FROM W4 3/4
DUB2
IC712
BUFFER
IC781
PULSE DL
IC783
IC711
IC783
STD
HBK
TO W4 2/4
HBK
C BU
TO W4 3/4
HI
R31A
CN320-5—CN800-5(P IN P)
Y BF
R32A
CN320-8—CN800-8(P IN P)
IC713
MIDW
PCST
TP703
VINL
FRM
WE
C BU
RER
REB
CBF
HI
CSY
RER
REB
C BF 1
TO W4 3/4
IC781
PULSE DL
C BF 2
TO W4 2/4
CSY
TO W4 3/4
FROM W4 3/4
DAC OUT
IC792
BUFFER
Q791
IC792
OR
IC791
PULSE GEN
IDCO
IDCI
SYSW
YCL
RSTH
HBK
HBKI
RSTV
CONTROL PULSE GEN (FOR CTCM)
CCLP
WRST
YBF
YBU
RRST
VISC
YBK
AO
CK
CFON
CFO
IC712
BUFFER
C.CLAMP
WRST
Y. BF
Y. BU
RRST
TO W4 3/4
VISC. TMG
TO W4 1/4
Y. BK
TO W4 2/4
WCK1
CK1
TO W4 3/4
(13.5MHz)
F36A,B
N20-14A
R40B
EE WIDE
IC710
RST PULSE GEN
IC711
TP704
(2.7MHz GEN)
IC714
COUNTER
IC710
PULSE GEN
L707
C782~784
L.P.F (3.5MHz)
Q711
BUFFER
NORM
SW701
ADJ
2.7MHz
TO W4 3/4
VR704
CSY POS1
VR781
CSY POS2
IC781
PULSE DL
FROM W4 2/4
V/C 3
IC712
V SEP
VSYNC
VP REC
R37A
CN30-13—CN58-—B2-L18C (TCG/TCR)
Q706
CPNT CFON
R35A
W6-R13A (AUDIO)
CN20-18B—CN50-8B (SYSCON)
COMPNT CF
R36B
W1-R15B (TBC & SYNC GEN)

REVERSE SIDE **SENC & P**
BLOCK DIA

SENC & P IN P BLOCK DIAGRAM 1/2 (SUB ENCODER SECTION) [FOR AU-65H]

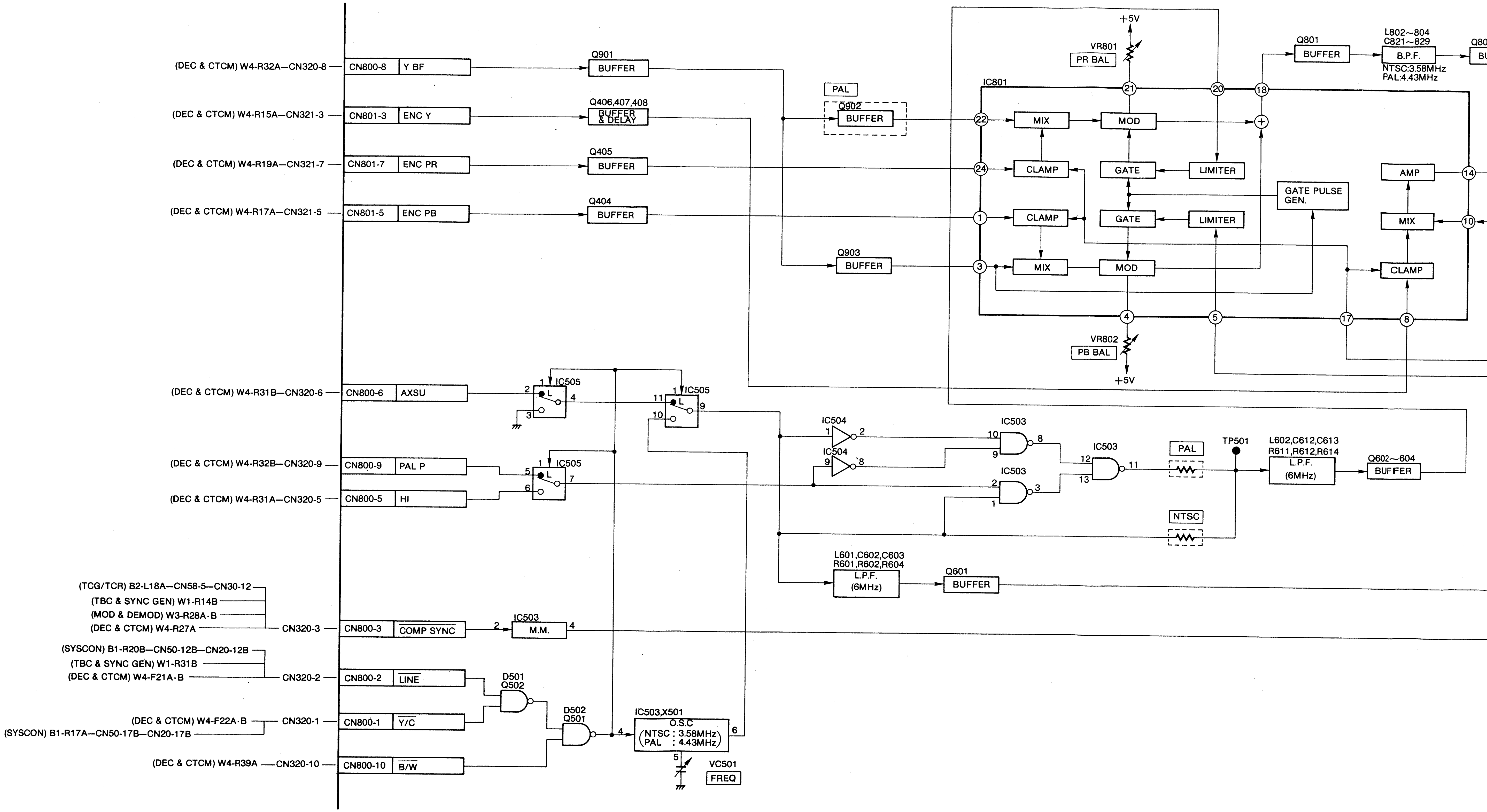
(DEC & CTCM) W4-R32A—CN320-8
CN800-8
Y BF
Q901
BUFFER
(DEC & CTCM) W4-R15A—CN321-3
CN801-3
ENC Y
Q406,407,408
BUFFER & DELAY
(DEC & CTCM) W4-R19A—CN321-7
CN801-7
ENC PR
Q405
BUFFER
(DEC & CTCM) W4-R17A—CN321-5
CN801-5
ENC PB
Q404
BUFFER
PAL
Q902
BUFFER
Q903
BUFFER
+5V
VR801
PR BAL
IC801
MIX
MOD
CLAMP
GATE
LIMITER
CLAMP
GATE
LIMITER
MIX
MOD
GATE PULSE GEN.
VR802
PB BAL
+5V
Q801
BUFFER
L802~804
C821~829
B.P.F.
NTSC:3.58MHz
PAL:4.43MHz
Q80
BU
AMP
MIX
CLAMP
(DEC & CTCM) W4-R31B—CN320-6
CN800-6
AXSU
IC505
IC505
(DEC & CTCM) W4-R32B—CN320-9
CN800-9
PAL P
IC505
(DEC & CTCM) W4-R31A—CN320-5
CN800-5
HI
IC504
IC504
IC503
IC503
IC503
PAL
TP501
NTSC
L602,C612,C613
R611,R612,R614
L.P.F.
(6MHz)
Q602~604
BUFFER
L601,C602,C603
R601,R602,R604
L.P.F.
(6MHz)
Q601
BUFFER
(TCG/TCR) B2-L18A—CN58-5—CN30-12
(TBC & SYNC GEN) W1-R14B
(MOD & DEMOD) W3-R28A·B
(DEC & CTCM) W4-R27A
CN320-3
CN800-3
COMP SYNC
IC503
M.M.
(SYSCON) B1-R20B—CN50-12B—CN20-12B
(TBC & SYNC GEN) W1-R31B
(DEC & CTCM) W4-F21A·B
CN320-2
CN800-2
LINE
D501
Q502
(DEC & CTCM) W4-F22A·B
CN320-1
(SYSCON) B1-R17A—CN50-17B—CN20-17B
CN800-1
Y/C
D502
Q501
IC503,X501
O.S.C
(NTSC : 3.58MHz)
(PAL : 4.43MHz)
VC501
FREQ
(DEC & CTCM) W4-R39A
CN320-10
CN800-10
B/W

1/2 (SUB ENCODER SECTION) [FOR AU-65H]

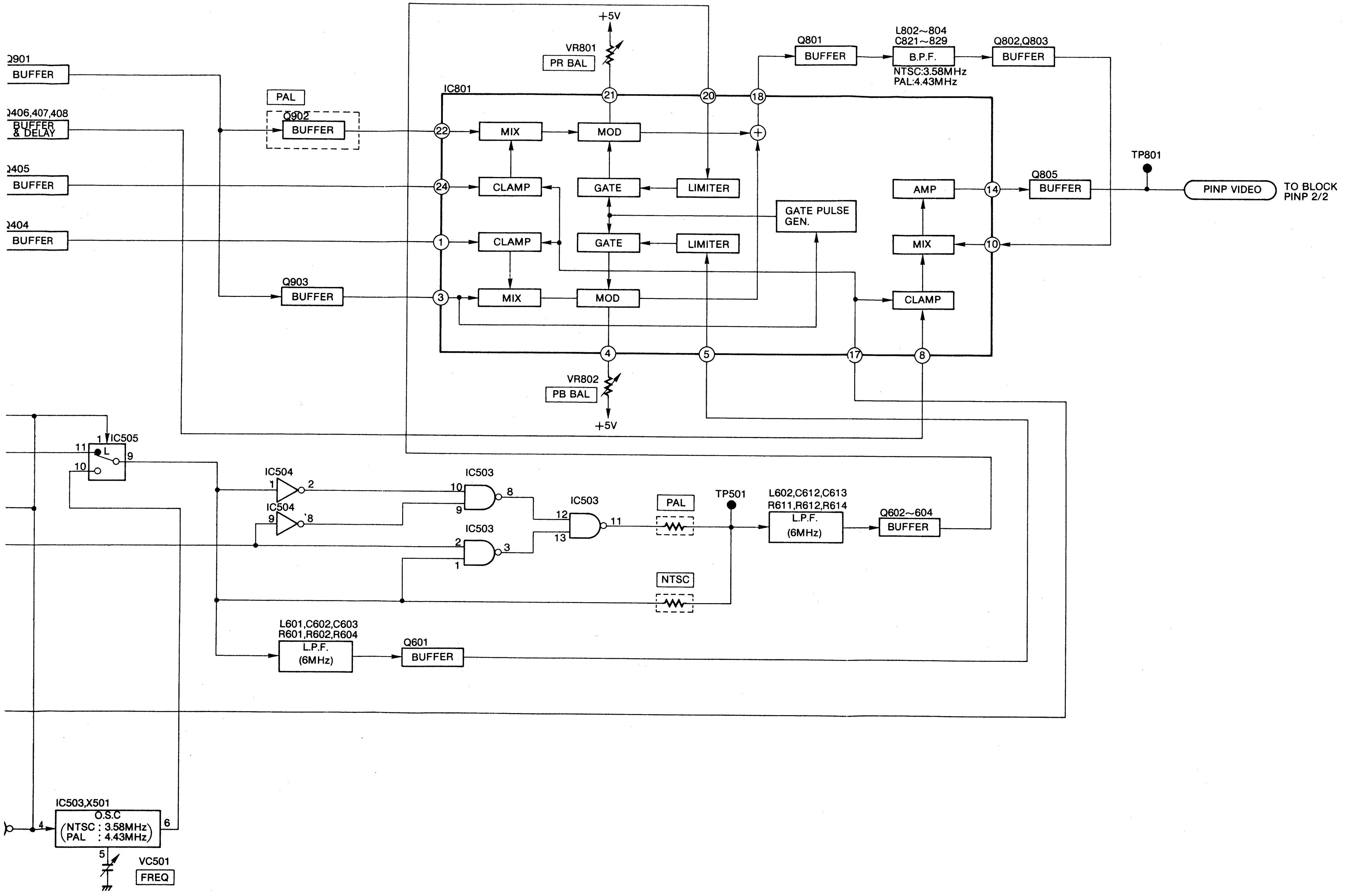

Q901 BUFFER
Q406,407,408 BUFFER & DELAY
Q405 BUFFER
Q404 BUFFER
PAL
Q902 BUFFER
Q903 BUFFER
+5V
VR801
PR BAL
IC801
21
20
18
22
MIX
MOD
24
CLAMP
GATE
LIMITER
GATE PULSE GEN.
1
CLAMP
GATE
LIMITER
3
MIX
MOD
4
5
17
8
VR802
PB BAL
+5V
Q801 BUFFER
L802~804
C821~829
B.P.F.
NTSC:3.58MHz
PAL:4.43MHz
Q802,Q803 BUFFER
AMP
14
MIX
10
CLAMP
TP801
Q805 BUFFER
PINP VIDEO
TO BLOCK PINP 2/2
IC505
1
11
L
9
10
IC504
1
2
IC504
9
8
IC503
10
8
9
IC503
2
3
1
IC503
12
13
11
PAL
NTSC
TP501
L602,C612,C613
R611,R612,R614
L.P.F. (6MHz)
Q602~604 BUFFER
L601,C602,C603
R601,R602,R604
L.P.F. (6MHz)
Q601 BUFFER
IC503,X501
O.S.C
(NTSC : 3.58MHz)
(PAL : 4.43MHz)
4
6
5
VC501
FREQ

SENC & P IN P BLOCK DIAGRAM 2/2 (P IN P SECTION) [FOR AU-65H]

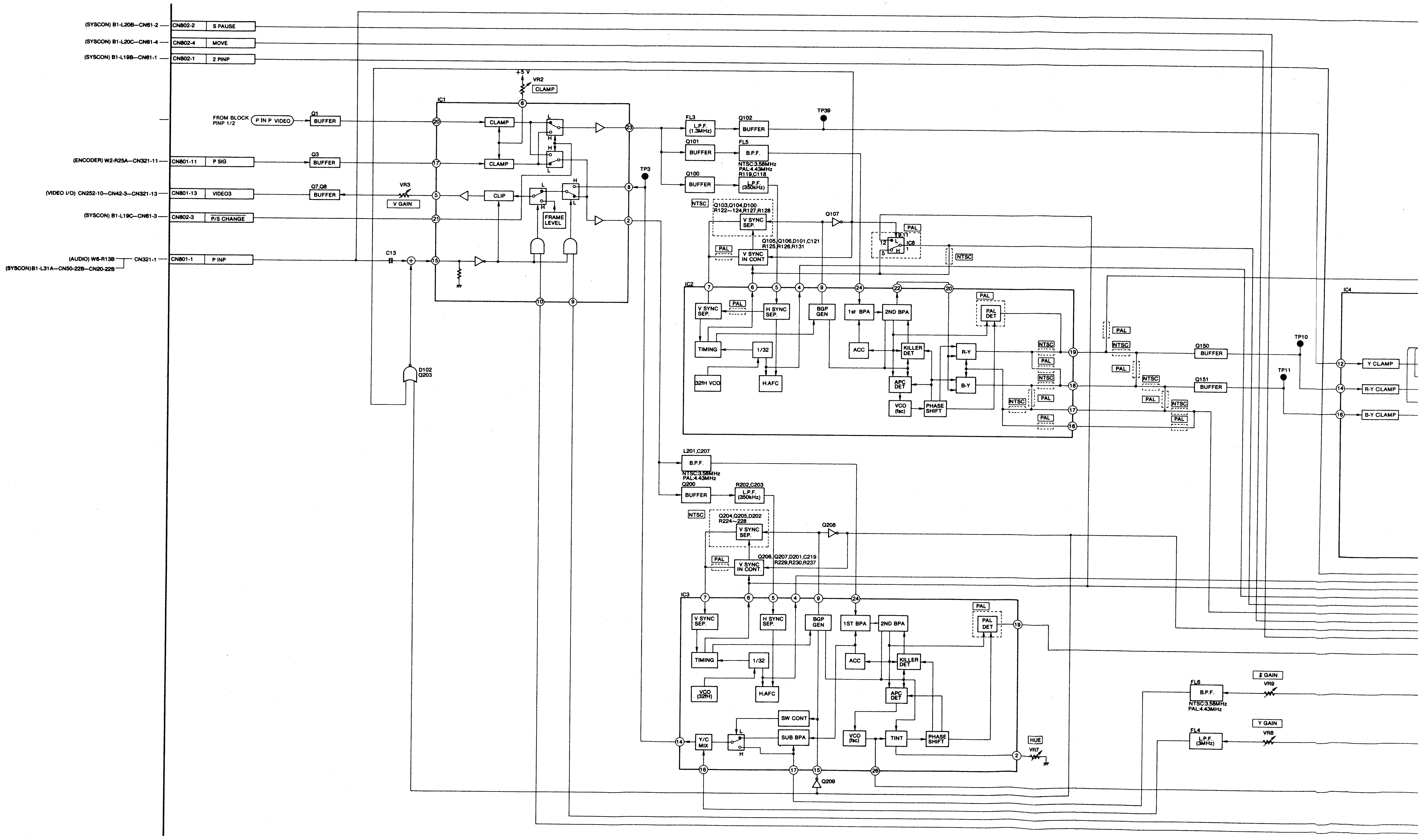
(SYSCON) B1-L20B—CN61-2
CN802-2
S PAUSE
(SYSCON) B1-L20C—CN61-4
CN802-4
MOVE
(SYSCON) B1-L19B—CN61-1
CN802-1
2 PINP
FROM BLOCK PINP 1/2
P IN P VIDEO
Q1
BUFFER
(ENCODER) W2-R25A—CN321-11
CN801-11
P SIG
Q3
BUFFER
(VIDEO I/O) CN252-10—CN42-3—CN321-13
CN801-13
VIDEO3
Q7,Q8
BUFFER
VR3
V GAIN
(SYSCON) B1-L19C—CN61-3
CN802-3
P/S CHANGE
(AUDIO) W6-R13B
CN321-1
(SYSCON) B1-L31A—CN50-22B—CN20-22B
CN801-1
P INP
C13
D102
Q203
+5 V
VR2
CLAMP
IC1
CLAMP
CLAMP
CLIP
FRAME LEVEL
L
H
TP3
FL3
L.P.F. (1.3MHz)
Q102
BUFFER
TP39
Q101
BUFFER
FL5
B.P.F.
NTSC:3.58MHz
PAL:4.43MHz
R119,C118
Q100
BUFFER
L.P.F. (350kHz)
NTSC
Q103,Q104,D100
R122~124,R127,R128
V SYNC SEP.
Q107
PAL
V SYNC IN CONT
Q105,Q106,D101,C121
R125,R126,R131
PAL
IC8
NTSC
IC2
V SYNC SEP.
PAL
H SYNC SEP.
BGP GEN
1st BPA
2ND BPA
PAL
PAL DET
TIMING
1/32
ACC
KILLER DET
R-Y
B-Y
32fH VCO
H.AFC
APC DET
VCO (fsc)
PHASE SHIFT
NTSC
PAL
NTSC
PAL
NTSC
PAL
PAL
NTSC
PAL
Q150
BUFFER
Q151
BUFFER
TP10
TP11
IC4
Y CLAMP
R-Y CLAMP
B-Y CLAMP
L201,C207
B.P.F.
NTSC:3.58MHz
PAL:4.43MHz
Q200
BUFFER
R202,C203
L.P.F. (350kHz)
NTSC
Q204,Q205,D202
R224~228
V SYNC SEP.
Q208
PAL
V SYNC IN CONT.
Q206,Q207,D201,C219
R229,R230,R237
IC3
V SYNC SEP.
H SYNC SEP.
BGP GEN
1ST BPA
2ND BPA
PAL
PAL DET
TIMING
1/32
ACC
KILLER DET
VCO (32fH)
H.AFC
APC DET
SW CONT
SUB BPA
Y/C MIX
VCO (fsc)
TINT
PHASE SHIFT
HUE
VR7
Q209
FL6
B.P.F.
NTSC:3.58MHz
PAL:4.43MHz
C GAIN
VR9
FL4
L.P.F. (3MHz)
Y GAIN
VR8

RAM 2/2 (P IN P SECTION) [FOR AU-65H]

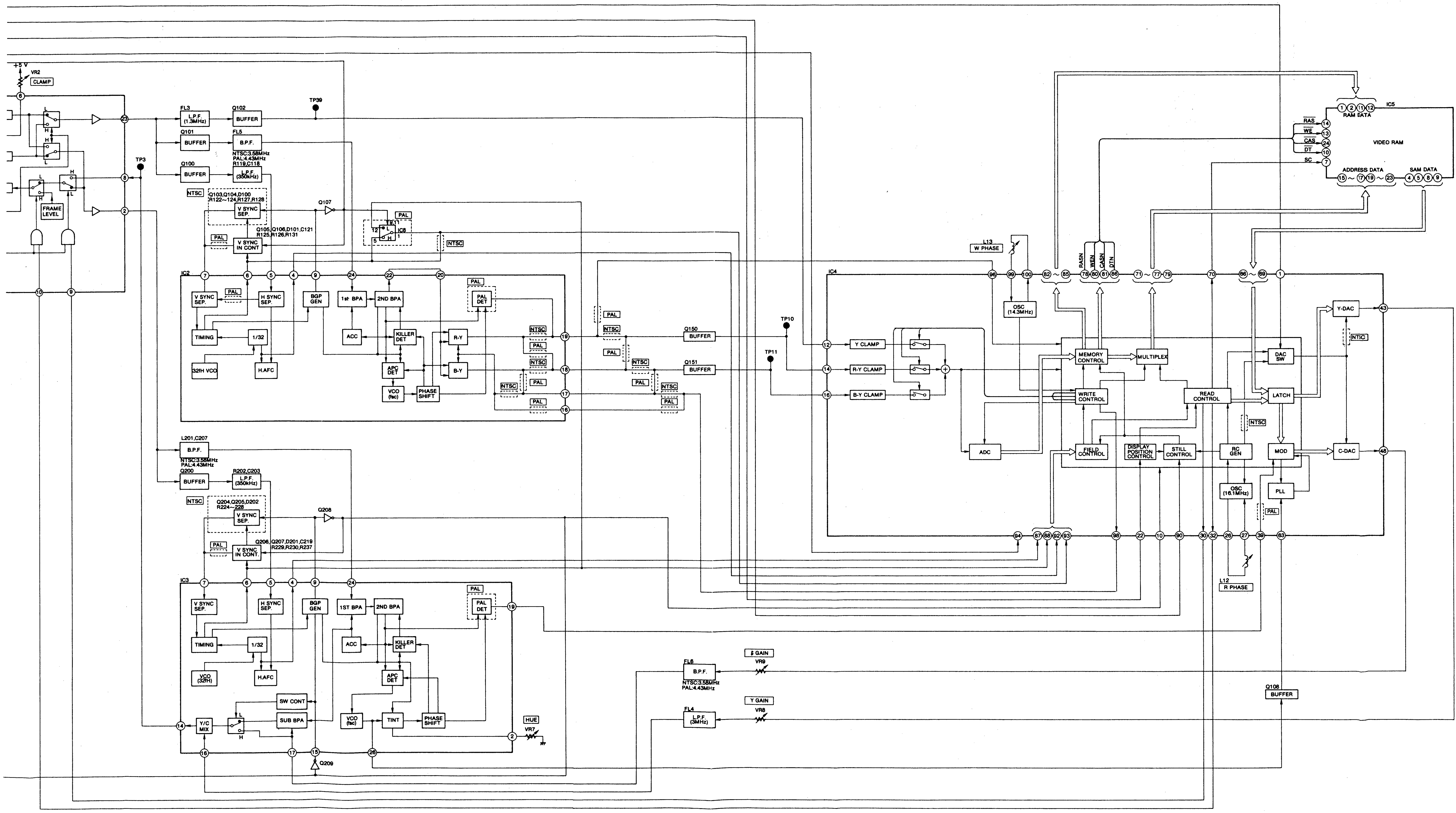
+5 V
VR2
CLAMP
FRAME LEVEL
TP3
FL3
L.P.F. (1.3MHz)
Q102
BUFFER
TP39
Q101
BUFFER
FL5
B.P.F.
NTSC:3.58MHz
PAL:4.43MHz
Q100
BUFFER
R119,C118
L.P.F. (350kHz)
NTSC
Q103,Q104,D100
R122~124,R127,R128
V SYNC SEP.
Q107
Q105,Q106,D101,C121
R125,R126,R131
PAL
V SYNC IN CONT
IC8
NTSC
IC2
V SYNC SEP.
H SYNC SEP.
BGP GEN
1st BPA
2ND BPA
PAL DET
TIMING
1/32
ACC
KILLER DET
R-Y
B-Y
APC DET
32fH VCO
H.AFC
VCO (fsc)
PHASE SHIFT
Q150
BUFFER
Q151
BUFFER
TP10
TP11
L201,C207
B.P.F.
NTSC:3.58MHz
PAL:4.43MHz
Q200
BUFFER
R202,C203
L.P.F. (350kHz)
Q204,Q205,D202
R224~228
V SYNC SEP.
Q208
Q206,Q207,D201,C219
R229,R230,R237
V SYNC IN CONT.
IC3
V SYNC SEP.
H SYNC SEP.
BGP GEN
1ST BPA
2ND BPA
PAL DET
TIMING
1/32
ACC
KILLER DET
VCO (32fH)
H.AFC
APC DET
SW CONT
Y/C MIX
SUB BPA
VCO (fsc)
TINT
PHASE SHIFT
HUE
VR7
Q209
FL6
B.P.F.
NTSC:3.58MHz
PAL:4.43MHz
FL4
L.P.F. (3MHz)
C GAIN
VR9
Y GAIN
VR8
L13
W PHASE
IC4
OSC (14.3MHz)
Y CLAMP
R-Y CLAMP
B-Y CLAMP
ADC
MEMORY CONTROL
MULTIPLEX
WRITE CONTROL
READ CONTROL
FIELD CONTROL
DISPLAY POSITION CONTROL
STILL CONTROL
RC GEN
OSC (18.1MHz)
DAC SW
LATCH
MOD
PLL
Y-DAC
C-DAC
NTSC
PAL
L12
R PHASE
RASN
WEN
CASN
DTN
IC5
RAM DATA
VIDEO RAM
RAS
WE
CAS
DT
SC
ADDRESS DATA
SAM DATA
Q108
BUFFER

W6 (AUDIO) BLOCK DIAGRAM 1/3 (LINEAR AUDIO SECTION)

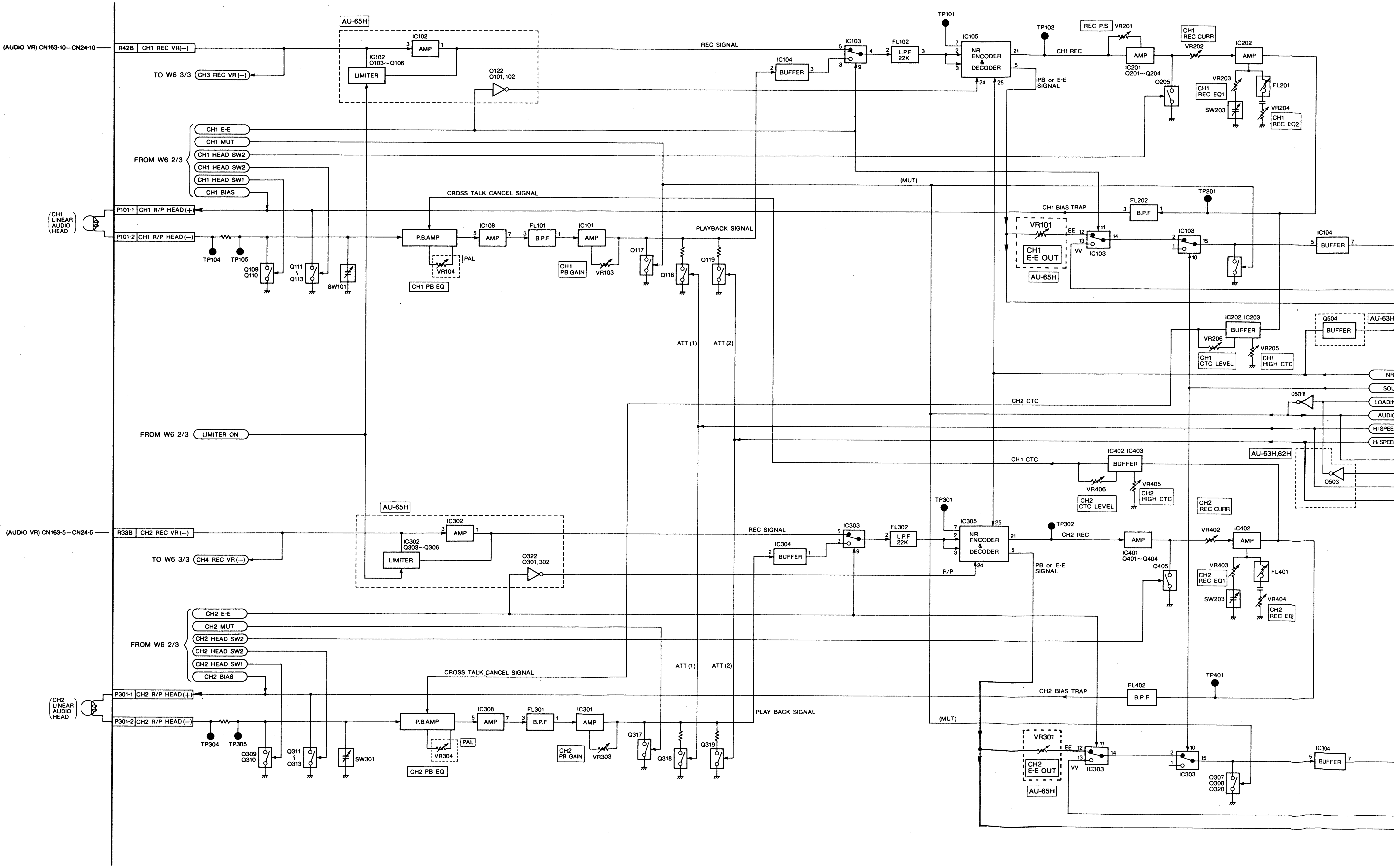
(AUDIO VR) CN163-10—CN24-10
R42B CH1 REC VR(−)
TO W6 3/3 CH3 REC VR(−)
AU-65H
IC102
AMP
IC102 Q103~Q106
LIMITER
Q122 Q101, 102
REC SIGNAL
IC103
IC104
BUFFER
FL102
L.P.F 22K
TP101
IC105
NR ENCODER & DECODER
TP102
CH1 REC
REC P.S
VR201
AMP
IC201 Q201~Q204
CH1 REC CURR
VR202
IC202
AMP
PB or E-E SIGNAL
Q205
VR203
CH1 REC EQ1
FL201
SW203
VR204
CH1 REC EQ2
CH1 E-E
CH1 MUT
CH1 HEAD SW2
CH1 HEAD SW2
CH1 HEAD SW1
CH1 BIAS
FROM W6 2/3
(MUT)
CROSS TALK CANCEL SIGNAL
CH1 LINEAR AUDIO HEAD
P101-1 CH1 R/P HEAD(+)
P101-2 CH1 R/P HEAD(−)
TP104
TP105
Q109 Q110
Q111 ~ Q113
SW101
P.B.AMP
VR104
PAL
CH1 PB EQ
IC108
AMP
FL101
B.P.F
IC101
AMP
CH1 PB GAIN
VR103
Q117
Q118
Q119
PLAYBACK SIGNAL
CH1 BIAS TRAP
FL202
B.P.F
TP201
VR101
CH1 E-E OUT
EE
VV
IC103
AU-65H
IC104
BUFFER
ATT (1)
ATT (2)
IC202, IC203
BUFFER
VR206
CH1 CTC LEVEL
VR205
CH1 HIGH CTC
Q504
BUFFER
AU-63H
NR
SOU
LOADIN
AUDIO
HI SPEE
HI SPEE
CH2 CTC
Q501
FROM W6 2/3 LIMITER ON
CH1 CTC
IC402, IC403
BUFFER
VR406
CH2 CTC LEVEL
VR405
CH2 HIGH CTC
AU-63H,62H
Q503
AU-65H
(AUDIO VR) CN163-5—CN24-5
R33B CH2 REC VR(−)
TO W6 3/3 CH4 REC VR(−)
IC302
AMP
IC302 Q303~Q306
LIMITER
Q322 Q301, 302
REC SIGNAL
IC303
IC304
BUFFER
FL302
L.P.F 22K
TP301
IC305
NR ENCODER & DECODER
TP302
CH2 REC
R/P
PB or E-E SIGNAL
AMP
IC401 Q401~Q404
Q405
CH2 REC CURR
VR402
IC402
AMP
VR403
CH2 REC EQ1
FL401
SW203
VR404
CH2 REC EQ
CH2 E-E
CH2 MUT
CH2 HEAD SW2
CH2 HEAD SW2
CH2 HEAD SW1
CH2 BIAS
FROM W6 2/3
CROSS TALK CANCEL SIGNAL
ATT (1)
ATT (2)
CH2 BIAS TRAP
FL402
B.P.F
TP401
CH2 LINEAR AUDIO HEAD
P301-1 CH2 R/P HEAD(+)
P301-2 CH2 R/P HEAD(−)
TP304
TP305
Q309 Q310
Q311 ~ Q313
SW301
P.B.AMP
VR304
PAL
CH2 PB EQ
IC308
AMP
FL301
B.P.F
IC301
AMP
CH2 PB GAIN
VR303
Q317
Q318
Q319
PLAY BACK SIGNAL
(MUT)
VR301
CH2 E-E OUT
EE
VV
IC303
AU-65H
IC303
Q307 Q308 Q320
IC304
BUFFER

(LINEAR AUDIO SECTION)

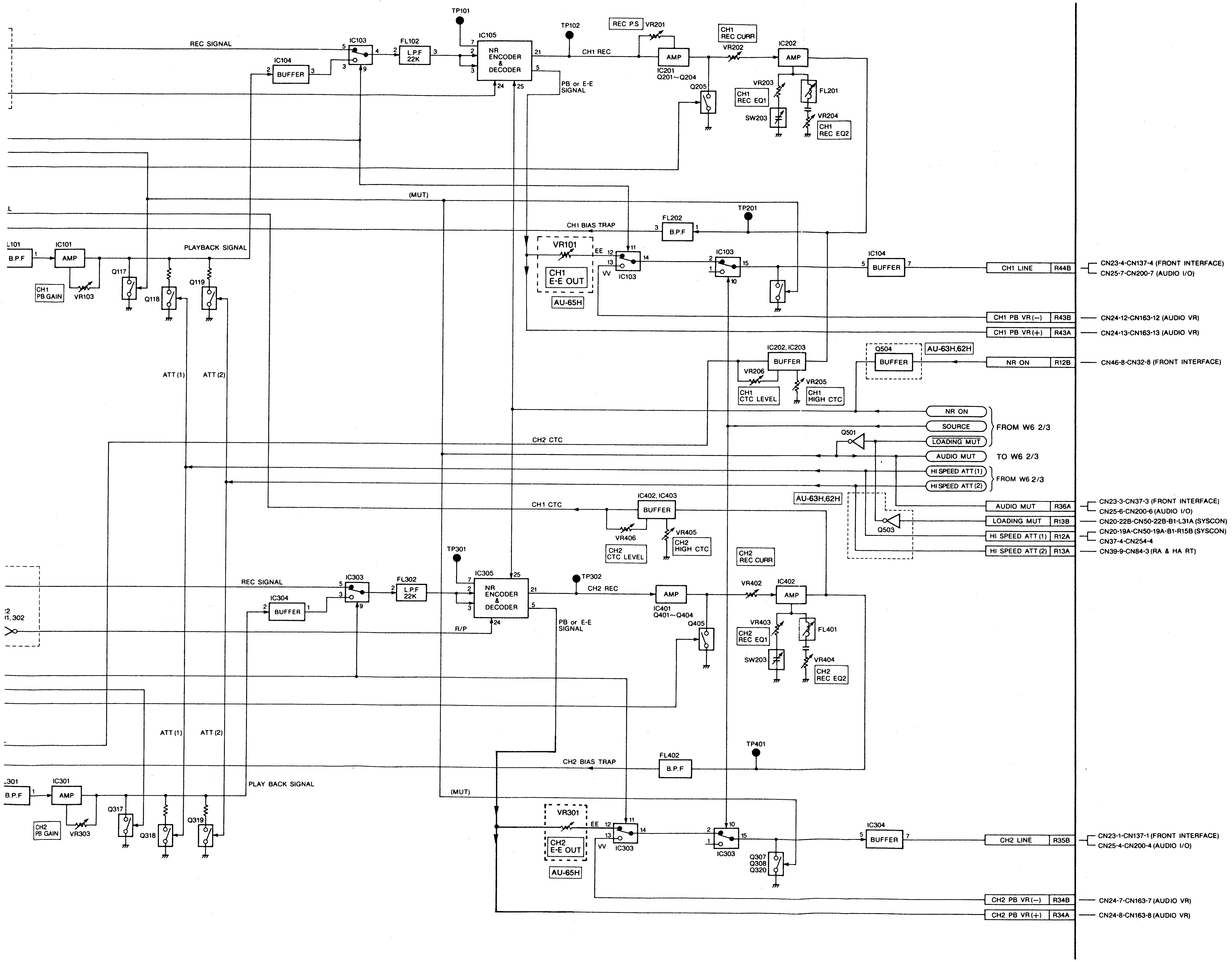

TP101
TP102
REC P.S
VR201
CH1 REC CURR
VR202
IC202
AMP
REC SIGNAL
IC103
FL102
L.P.F 22K
IC105
NR ENCODER & DECODER
CH1 REC
IC104
BUFFER
IC201 Q201~Q204
Q205
PB or E-E SIGNAL
VR203
CH1 REC EQ1
FL201
SW203
VR204
CH1 REC EQ2
(MUT)
TP201
FL202
B.P.F
CH1 BIAS TRAP
IC101
B.P.F
AMP
PLAYBACK SIGNAL
VR101
CH1 E-E OUT
AU-65H
EE
VV
Q117
Q118
Q119
CH1 PB GAIN
VR103
ATT (1)
ATT (2)
CH1 LINE
R44B
CN23-4-CN137-4 (FRONT INTERFACE)
CN25-7-CN200-7 (AUDIO I/O)
CH1 PB VR(−)
R43B
CN24-12-CN163-12 (AUDIO VR)
CH1 PB VR(+)
R43A
CN24-13-CN163-13 (AUDIO VR)
IC202, IC203
BUFFER
VR206
CH1 CTC LEVEL
VR205
CH1 HIGH CTC
Q504
AU-63H,62H
NR ON
R12B
CN46-8-CN32-8 (FRONT INTERFACE)
NR ON
SOURCE
LOADING MUT
FROM W6 2/3
Q501
AUDIO MUT
TO W6 2/3
HI SPEED ATT(1)
HI SPEED ATT(2)
FROM W6 2/3
CH2 CTC
CH1 CTC
IC402, IC403
BUFFER
VR406
CH2 CTC LEVEL
VR405
CH2 HIGH CTC
AU-63H,62H
AUDIO MUT
R36A
CN23-3-CN37-3 (FRONT INTERFACE)
CN25-6-CN200-6 (AUDIO I/O)
LOADING MUT
R13B
CN20-22B-CN50-22B-B1-L31A (SYSCON)
Q503
HI SPEED ATT (1)
R12A
CN20-19A-CN50-19A-B1-R15B (SYSCON)
CN37-4-CN254-4
HI SPEED ATT (2)
R13A
CN39-9-CN84-3 (RA & HA RT)
TP301
IC305
NR ENCODER & DECODER
TP302
CH2 REC
CH2 REC CURR
VR402
IC402
AMP
REC SIGNAL
IC303
FL302
L.P.F 22K
IC304
BUFFER
IC401 Q401~Q404
Q405
R/P
PB or E-E SIGNAL
VR403
CH2 REC EQ1
FL401
SW203
VR404
CH2 REC EQ2
ATT (1)
ATT (2)
TP401
FL402
B.P.F
CH2 BIAS TRAP
IC301
B.P.F
AMP
PLAY BACK SIGNAL
(MUT)
Q317
Q318
Q319
CH2 PB GAIN
VR303
VR301
CH2 E-E OUT
AU-65H
EE
VV
IC303
IC304
BUFFER
Q307 Q308 Q320
CH2 LINE
R35B
CN23-1-CN137-1 (FRONT INTERFACE)
CN25-4-CN200-4 (AUDIO I/O)
CH2 PB VR(−)
R34B
CN24-7-CN163-7 (AUDIO VR)
CH2 PB VR(+)
R34A
CN24-8-CN163-8 (AUDIO VR)

W6 (AUDIO) BLOCK DIAGRAM 2/3 (REC BIAS & TC SECTION)

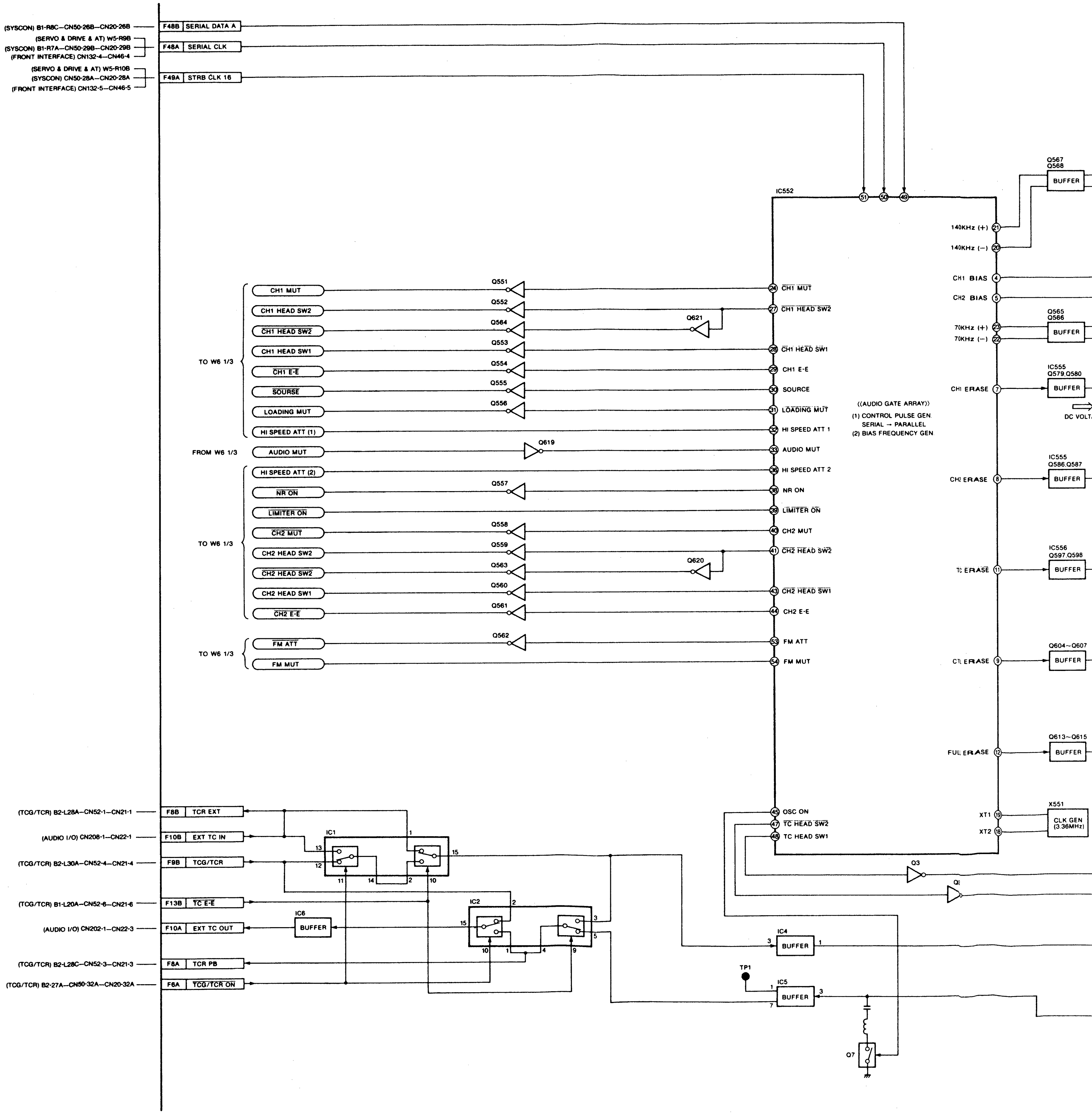
(SYSCON) B1-R8C—CN50-26B—CN20-26B
(SERVO & DRIVE & AT) W5-R9B
(SYSCON) B1-R7A—CN50-29B—CN20-29B
(FRONT INTERFACE) CN132-4—CN46-4
(SERVO & DRIVE & AT) W5-R10B
(SYSCON) CN50-28A—CN20-28A
(FRONT INTERFACE) CN132-5—CN46-5
F48B SERIAL DATA A
F48A SERIAL CLK
F49A STRB CLK 16
IC552
51
50
49
CH1 MUT
CH1 HEAD SW2
CH1 HEAD SW2
CH1 HEAD SW1
CH1 E-E
SOURSE
LOADING MUT
HI SPEED ATT (1)
TO W6 1/3
FROM W6 1/3
AUDIO MUT
HI SPEED ATT (2)
NR ON
LIMITER ON
CH2 MUT
CH2 HEAD SW2
CH2 HEAD SW2
CH2 HEAD SW1
CH2 E-E
TO W6 1/3
FM ATT
FM MUT
TO W6 1/3
Q551
Q552
Q564
Q621
Q553
Q554
Q555
Q556
Q619
Q557
Q558
Q559
Q563
Q620
Q560
Q561
Q562
24 CH1 MUT
27 CH1 HEAD SW2
28 CH1 HEAD SW1
29 CH1 E-E
30 SOURCE
31 LOADING MUT
32 HI SPEED ATT 1
33 AUDIO MUT
36 HI SPEED ATT 2
38 NR ON
39 LIMITER ON
40 CH2 MUT
41 CH2 HEAD SW2
43 CH2 HEAD SW1
44 CH2 E-E
53 FM ATT
54 FM MUT
((AUDIO GATE ARRAY))
(1) CONTROL PULSE GEN.
SERIAL → PARALLEL
(2) BIAS FREQUENCY GEN.
140KHz (+) 21
140KHz (−) 20
CH1 BIAS 4
CH2 BIAS 5
70KHz (+) 23
70KHz (−) 22
CH1 ERASE 7
CH2 ERASE 8
TC ERASE 11
CTL ERASE 9
FULL ERASE 12
XT1 19
XT2 18
Q567
Q568
BUFFER
Q565
Q566
BUFFER
IC555
Q579,Q580
BUFFER
DC VOLT
IC555
Q586,Q587
BUFFER
IC556
Q597,Q598
BUFFER
Q604~Q607
BUFFER
Q613~Q615
BUFFER
X551
CLK GEN
(3.36MHz)
45 OSC ON
47 TC HEAD SW2
48 TC HEAD SW1
Q3
Q2
(TCG/TCR) B2-L28A—CN52-1—CN21-1
(AUDIO I/O) CN208-1—CN22-1
(TCG/TCR) B2-L30A—CN52-4—CN21-4
(TCG/TCR) B1-L20A—CN52-6—CN21-6
(AUDIO I/O) CN202-1—CN22-3
(TCG/TCR) B2-L28C—CN52-3—CN21-3
(TCG/TCR) B2-27A—CN50-32A—CN20-32A
F8B TCR EXT
F10B EXT TC IN
F9B TCG/TCR
F13B TC E-E
F10A EXT TC OUT
F8A TCR PB
F6A TCG/TCR ON
IC1
13
12
11
14
2
10
1
15
IC6
BUFFER
IC2
2
15
10
1
4
9
3
5
IC4
3
BUFFER
1
TP1
IC5
1
7
BUFFER
3
Q7

W6 (AUDIO) BLOCK DIAGRAM 2/3 (REC BIAS & TC SECTION)

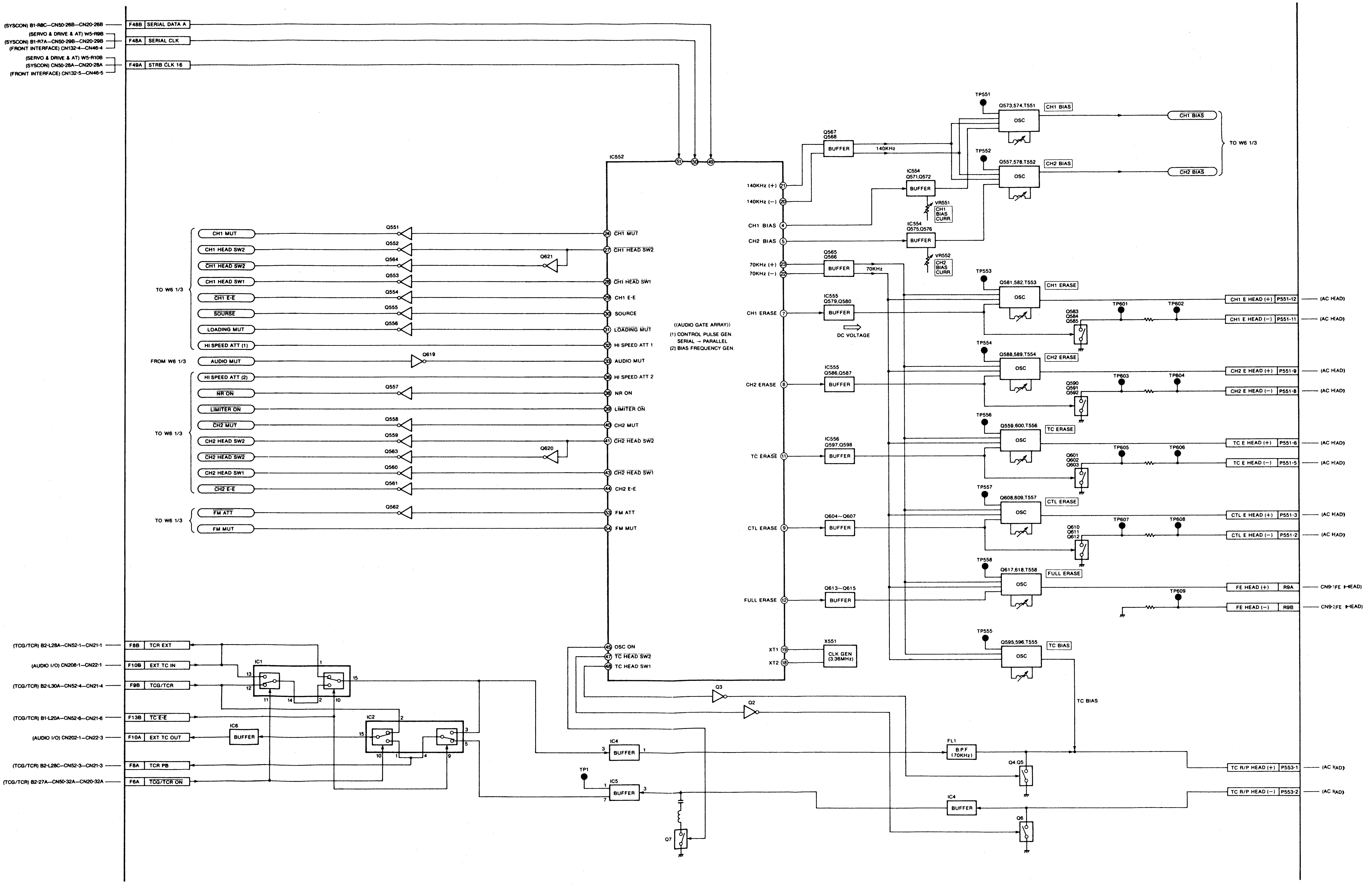
(SYSCON) B1-R8C—CN50-26B—CN20-26B
F48B SERIAL DATA A
(SERVO & DRIVE & AT) W5-R9B
(SYSCON) B1-R7A—CN50-29B—CN20-29B
(FRONT INTERFACE) CN132-4—CN46-4
F48A SERIAL CLK
(SERVO & DRIVE & AT) W5-R10B
(SYSCON) CN50-28A—CN20-28A
(FRONT INTERFACE) CN132-5—CN46-5
F49A STRB CLK 16
IC552
((AUDIO GATE ARRAY))
(1) CONTROL PULSE GEN
SERIAL → PARALLEL
(2) BIAS FREQUENCY GEN
TO W6 1/3
CH1 MUT
CH1 HEAD SW2
CH1 HEAD SW2
CH1 HEAD SW1
CH1 E-E
SOURSE
LOADING MUT
HI SPEED ATT (1)
FROM W6 1/3
AUDIO MUT
HI SPEED ATT (2)
NR ON
LIMITER ON
CH2 MUT
CH2 HEAD SW2
CH2 HEAD SW2
CH2 HEAD SW1
CH2 E-E
FM ATT
FM MUT
Q551
Q552
Q564
Q621
Q553
Q554
Q555
Q556
Q619
Q557
Q558
Q559
Q563
Q620
Q560
Q561
Q562
CH1 MUT
CH1 HEAD SW2
CH1 HEAD SW1
CH1 E-E
SOURCE
LOADING MUT
HI SPEED ATT 1
AUDIO MUT
HI SPEED ATT 2
NR ON
LIMITER ON
CH2 MUT
CH2 HEAD SW2
CH2 HEAD SW1
CH2 E-E
FM ATT
FM MUT
OSC ON
TC HEAD SW2
TC HEAD SW1
140KHz (+)
140KHz (−)
CH1 BIAS
CH2 BIAS
70KHz (+)
70KHz (−)
CH1 ERASE
CH2 ERASE
TC ERASE
CTL ERASE
FULL ERASE
XT1
XT2
Q567 Q568 BUFFER
140KHz
IC554 Q571,Q572 BUFFER
VR551 CH1 BIAS CURR
IC554 Q575,Q576 BUFFER
VR552 CH2 BIAS CURR
Q565 Q566 BUFFER
70KHz
IC555 Q579,Q580 BUFFER
DC VOLTAGE
IC555 Q586,Q587 BUFFER
IC556 Q597,Q598 BUFFER
Q604~Q607 BUFFER
Q613~Q615 BUFFER
X551 CLK GEN (3.36MHz)
TP551
Q573,574,T551 OSC
CH1 BIAS
TP552
Q557,578,T552 OSC
CH2 BIAS
CH1 BIAS
CH2 BIAS
TO W6 1/3
TP553
Q581,582,T553 OSC
CH1 ERASE
Q583 Q584 Q585
TP601
TP602
TP554
Q588,589,T554 OSC
CH2 ERASE
Q590 Q591 Q592
TP603
TP604
TP556
Q559,600,T556 OSC
TC ERASE
Q601 Q602 Q603
TP605
TP606
TP557
Q608,609,T557 OSC
CTL ERASE
Q610 Q611 Q612
TP607
TP608
TP558
Q617,618,T558 OSC
FULL ERASE
TP609
TP555
Q595,596,T555 OSC
TC BIAS
TC BIAS
CH1 E HEAD (+) P551-12 (AC HEAD)
CH1 E HEAD (−) P551-11 (AC HEAD)
CH2 E HEAD (+) P551-9 (AC HEAD)
CH2 E HEAD (−) P551-8 (AC HEAD)
TC E HEAD (+) P551-6 (AC HEAD)
TC E HEAD (−) P551-5 (AC HEAD)
CTL E HEAD (+) P551-3 (AC HEAD)
CTL E HEAD (−) P551-2 (AC HEAD)
FE HEAD (+) R9A CN9-1(FE HEAD)
FE HEAD (−) R9B CN9-2(FE HEAD)
(TCG/TCR) B2-L28A—CN52-1—CN21-1
F8B TCR EXT
(AUDIO I/O) CN208-1—CN22-1
F10B EXT TC IN
(TCG/TCR) B2-L30A—CN52-4—CN21-4
F9B TCG/TCR
(TCG/TCR) B1-L20A—CN52-6—CN21-6
F13B TC E-E
(AUDIO I/O) CN202-1—CN22-3
F10A EXT TC OUT
(TCG/TCR) B2-L28C—CN52-3—CN21-3
F8A TCR PB
(TCG/TCR) B2-27A—CN50-32A—CN20-32A
F6A TCG/TCR ON
IC1
IC2
IC6 BUFFER
IC4 BUFFER
IC5 BUFFER
TP1
Q7
Q3
Q2
FL1 B.P.F (70KHz)
Q4,Q5
IC4 BUFFER
Q6
TC R/P HEAD (+) P553-1 (AC HEAD)
TC R/P HEAD (−) P553-2 (AC HEAD)

W6(AUDIO) BLOCK DIAGRAM 3/3(FM AUDIO SECTION)

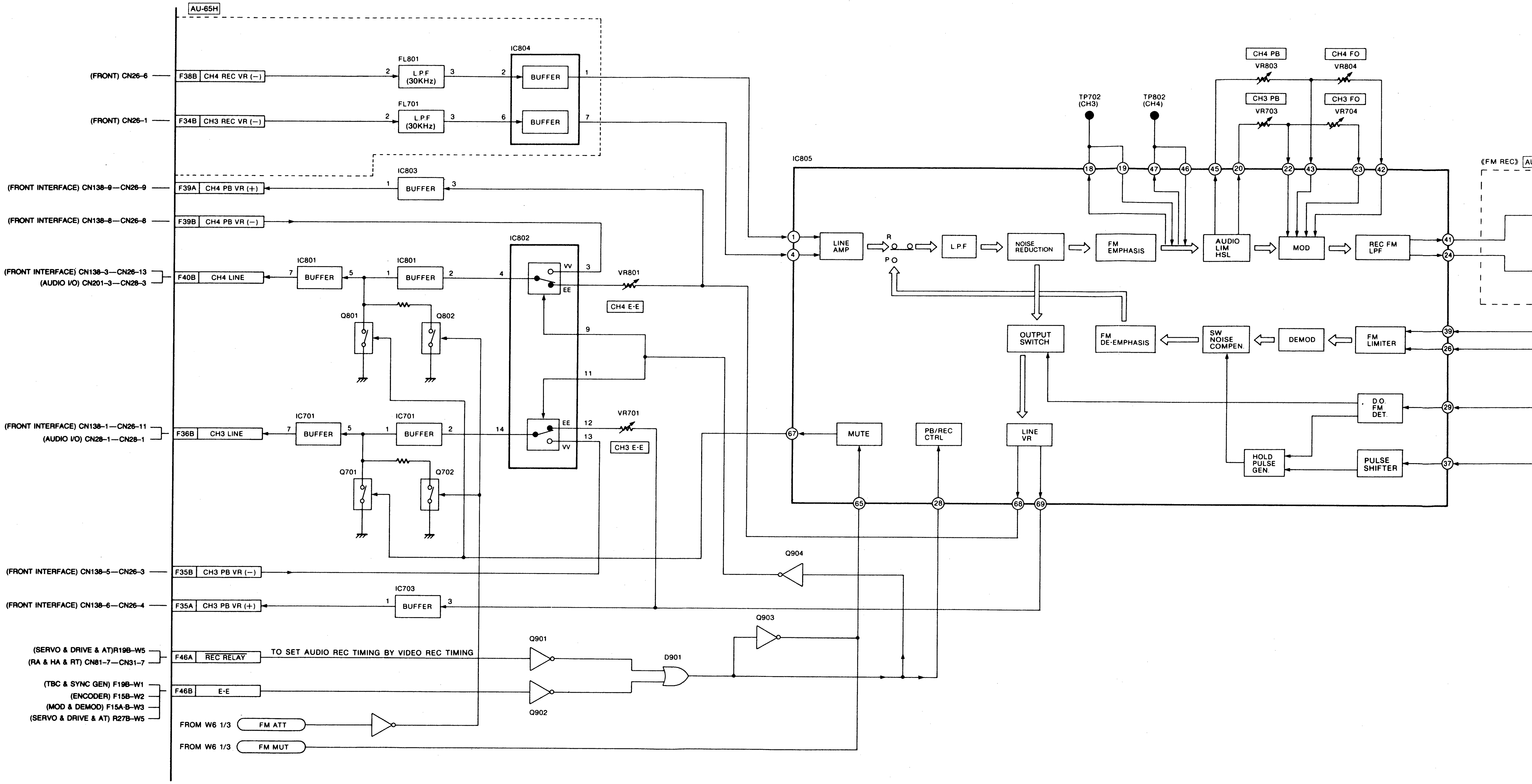
AU-65H
(FRONT) CN26-6
F38B
CH4 REC VR (−)
FL801
L.P.F (30KHz)
IC804
BUFFER
(FRONT) CN26-1
F34B
CH3 REC VR (−)
FL701
L.P.F (30KHz)
BUFFER
(FRONT INTERFACE) CN138-9—CN26-9
F39A
CH4 PB VR (+)
IC803
BUFFER
(FRONT INTERFACE) CN138-8—CN26-8
F39B
CH4 PB VR (−)
IC802
(FRONT INTERFACE) CN138-3—CN26-13
(AUDIO I/O) CN201-3—CN28-3
F40B
CH4 LINE
IC801
BUFFER
IC801
BUFFER
VV
EE
VR801
CH4 E-E
Q801
Q802
(FRONT INTERFACE) CN138-1—CN26-11
(AUDIO I/O) CN28-1—CN28-1
F36B
CH3 LINE
IC701
BUFFER
IC701
BUFFER
EE
VV
VR701
CH3 E-E
Q701
Q702
(FRONT INTERFACE) CN138-5—CN26-3
F35B
CH3 PB VR (−)
IC703
(FRONT INTERFACE) CN138-6—CN26-4
F35A
CH3 PB VR (+)
BUFFER
(SERVO & DRIVE & AT)R19B-W5
(RA & HA & RT) CN81-7—CN31-7
F46A
REC RELAY
TO SET AUDIO REC TIMING BY VIDEO REC TIMING
(TBC & SYNC GEN) F19B-W1
(ENCODER) F15B-W2
(MOD & DEMOD) F15A·B-W3
(SERVO & DRIVE & AT) R27B-W5
F46B
E-E
FROM W6 1/3
FM ATT
FROM W6 1/3
FM MUT
Q901
Q902
D901
Q903
Q904
IC805
TP702 (CH3)
TP802 (CH4)
CH4 PB
VR803
CH4 FO
VR804
CH3 PB
VR703
CH3 FO
VR704
LINE AMP
R
P
L.P.F
NOISE REDUCTION
FM EMPHASIS
AUDIO LIM HSL
MOD
REC FM LPF
《FM REC》
OUTPUT SWITCH
FM DE-EMPHASIS
SW NOISE COMPEN.
DEMOD
FM LIMITER
D.O. FM DET.
MUTE
PB/REC CTRL
LINE VR
HOLD PULSE GEN.
PULSE SHIFTER
18
19
47
46
45
20
22
43
23
42
1
4
41
24
39
26
29
67
37
65
28
68
69

DIO SECTION)

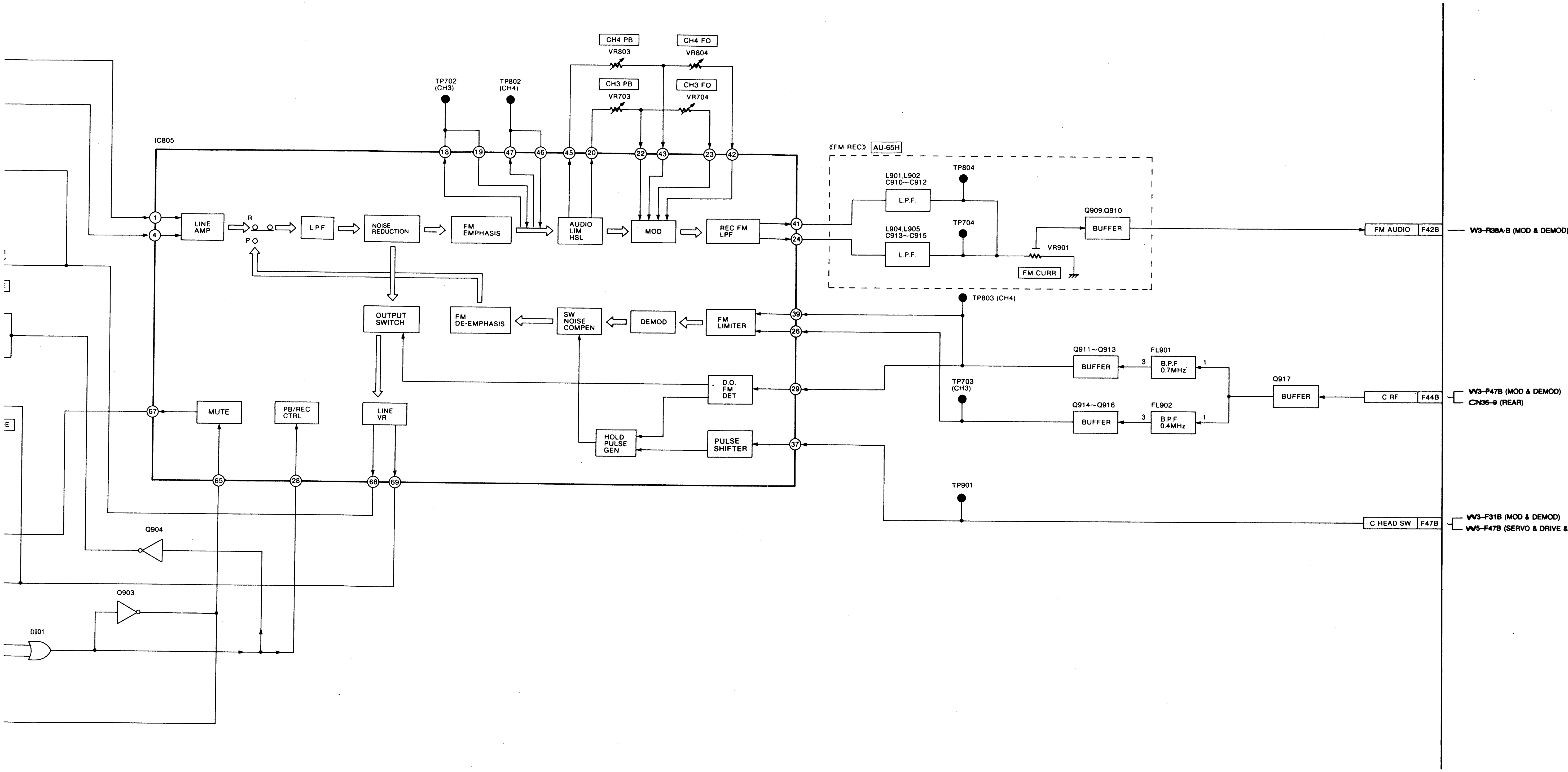

IC805
TP702 (CH3)
TP802 (CH4)
CH4 PB
VR803
CH4 FO
VR804
CH3 PB
VR703
CH3 FO
VR704
18
19
47
46
45
20
22
43
23
42
1
4
LINE AMP
R
P
L.P.F
NOISE REDUCTION
FM EMPHASIS
AUDIO LIM HSL
MOD
REC FM LPF
41
24
《FM REC》
AU-65H
L901,L902 C910~C912
L.P.F.
TP804
L904,L905 C913~C915
L.P.F.
TP704
Q909,Q910
BUFFER
VR901
FM CURR
FM AUDIO
F42B
W3-R38A·B (MOD & DEMOD)
TP803 (CH4)
OUTPUT SWITCH
FM DE-EMPHASIS
SW NOISE COMPEN.
DEMOD
FM LIMITER
39
26
Q911~Q913
BUFFER
FL901
B.P.F 0.7MHz
3
1
Q917
BUFFER
C RF
F44B
W3-F47B (MOD & DEMOD)
CN36-9 (REAR)
D.O. FM DET.
29
TP703 (CH3)
Q914~Q916
BUFFER
FL902
B.P.F 0.4MHz
3
1
67
MUTE
PB/REC CTRL
LINE VR
HOLD PULSE GEN.
PULSE SHIFTER
37
65
28
68
69
TP901
C HEAD SW
F47B
W3-F31B (MOD & DEMOD)
W5-F47B (SERVO & DRIVE &
Q904
Q903
D901
E

B1 (SYSTEM CONTROL) BLOCK DIAGRAM 1/3 (CPU SECTION)

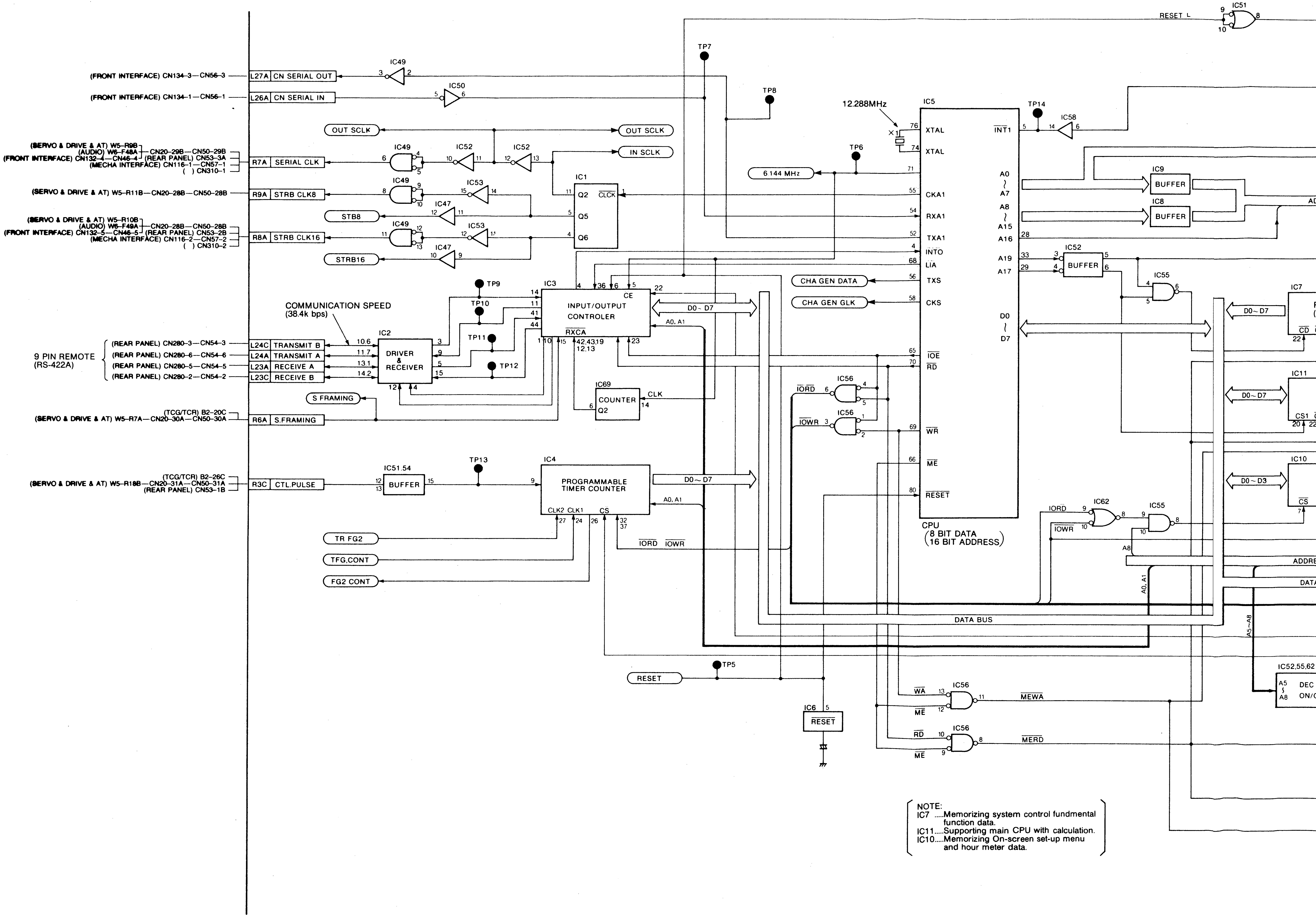

(FRONT INTERFACE) CN134-3—CN56-3
L27A CN SERIAL OUT
(FRONT INTERFACE) CN134-1—CN56-1
L26A CN SERIAL IN
OUT SCLK
IN SCLK
R7A SERIAL CLK
R9A STRB CLK8
STB8
R8A STRB CLK16
STRB16
(SERVO & DRIVE & AT) W5-R11B—CN20-28B—CN50-28B
COMMUNICATION SPEED (38.4k bps)
9 PIN REMOTE (RS-422A)
(REAR PANEL) CN280-3—CN54-3
(REAR PANEL) CN280-6—CN54-6
(REAR PANEL) CN280-5—CN54-5
(REAR PANEL) CN280-2—CN54-2
L24C TRANSMIT B
L24A TRANSMIT A
L23A RECEIVE A
L23C RECEIVE B
IC2 DRIVER & RECEIVER
S FRAMING
R6A S.FRAMING
R3C CTL.PULSE
IC51.54 BUFFER
IC1
IC3 INPUT/OUTPUT CONTROLER
RXCA
IC69 COUNTER
CLK
IC4 PROGRAMMABLE TIMER COUNTER
CLK2 CLK1 CS
TR FG2
TFG.CONT
FG2 CONT
D0~D7
A0, A1
IORD IOWR
TP5
TP6
TP7
TP8
TP9
TP10
TP11
TP12
TP13
TP14
RESET
IC6 RESET
12.288MHz
6.144 MHz
IC5
XTAL
CKA1
RXA1
TXA1
INTO
LIA
TXS
CKS
IOE
RD
WR
ME
RESET
INT1
A0 ~ A7
A8 ~ A15
A16
A19
A17
D0 ~ D7
CPU (8 BIT DATA 16 BIT ADDRESS)
CHA GEN DATA
CHA GEN GLK
IC9 BUFFER
IC8 BUFFER
IC52 BUFFER
IC55
IC56
IC58
IC62
IC51
RESET L
IC7
IC11
IC10
IC52,55,62
DEC ON/O
MEWA
MERD
DATA BUS
ADDRE
DATA
A5~A8

NOTE:
IC7 .....Memorizing system control fundmental function data.
IC11.....Supporting main CPU with calculation.
IC10.....Memorizing On-screen set-up menu and hour meter data.

STEM CONTROL) BLOCK DIAGRAM 1/3 (CPU SECTION)

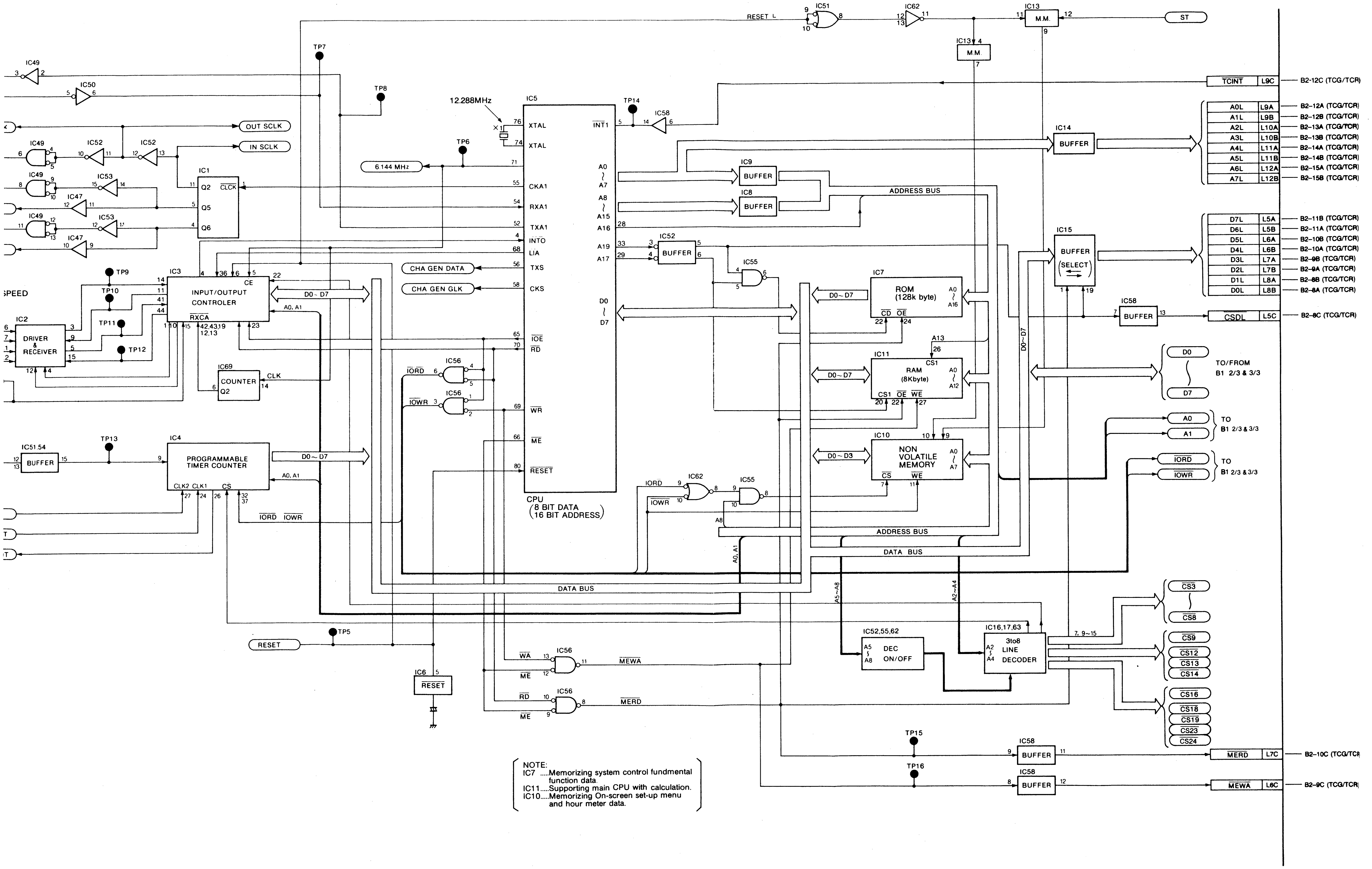
RESET L
IC51
IC62
IC13
M.M.
ST
IC13
M.M.
TP7
TP8
IC49
IC50
12.288MHz
IC5
XTAL
XTAL
INT1
TP14
IC58
OUT SCLK
IN SCLK
IC52
IC52
IC49
TP6
6.144 MHz
CKA1
RXA1
TXA1
INT0
LIA
TXS
CKS
IOE
RD
WR
ME
RESET
A0 ~ A7
A8 ~ A15
A16
A19
A17
D0 ~ D7
CPU
(8 BIT DATA
16 BIT ADDRESS)
IC1
Q2
CLCK
Q5
Q6
IC53
IC47
IC53
IC47
TP9
TP10
SPEED
IC3
INPUT/OUTPUT
CONTROLER
CE
RXCA
D0 ~ D7
A0, A1
IC2
DRIVER & RECEIVER
TP11
TP12
IC69
COUNTER
Q2
CLK
CHA GEN DATA
CHA GEN GLK
IC56
IORD
IOWR
TP13
IC51.54
BUFFER
IC4
PROGRAMMABLE TIMER COUNTER
CLK2 CLK1
CS
D0 ~ D7
A0, A1
IORD IOWR
DATA BUS
TP5
RESET
IC6
RESET
WA
ME
MEWA
RD
ME
MERD
IC9
BUFFER
IC8
BUFFER
ADDRESS BUS
IC52
BUFFER
IC55
IC7
ROM
(128k byte)
A0 ~ A16
CD OE
A13
IC11
RAM
(8Kbyte)
CS1 OE WE
A0 ~ A12
IC10
NON VOLATILE MEMORY
CS WE
A0 ~ A7
D0 ~ D7
D0 ~ D7
D0 ~ D3
IC62
IORD
IOWR
IC55
A8
ADDRESS BUS
DATA BUS
A0, A1
A5 ~ A8
A2 ~ A4
IC52,55,62
A5 ~ A8
DEC ON/OFF
IC16,17,63
3to8 LINE DECODER
A2 ~ A4
7, 9~15
CS3 ~ CS8
CS9
CS12
CS13
CS14
CS16
CS18
CS19
CS23
CS24
IC14
BUFFER
TCINT L9C B2-12C (TCG/TCR)
A0L L9A B2-12A (TCG/TCR)
A1L L9B B2-12B (TCG/TCR)
A2L L10A B2-13A (TCG/TCR)
A3L L10B B2-13B (TCG/TCR)
A4L L11A B2-14A (TCG/TCR)
A5L L11B B2-14B (TCG/TCR)
A6L L12A B2-15A (TCG/TCR)
A7L L12B B2-15B (TCG/TCR)
IC15
BUFFER
(SELECT)
D7L L5A B2-11B (TCG/TCR)
D6L L5B B2-11A (TCG/TCR)
D5L L6A B2-10B (TCG/TCR)
D4L L6B B2-10A (TCG/TCR)
D3L L7A B2-9B (TCG/TCR)
D2L L7B B2-9A (TCG/TCR)
D1L L8A B2-8B (TCG/TCR)
D0L L8B B2-8A (TCG/TCR)
IC58
BUFFER
CSDL L5C B2-8C (TCG/TCR)
D0 ~ D7
TO/FROM B1 2/3 & 3/3
A0
A1
TO B1 2/3 & 3/3
IORD
IOWR
TO B1 2/3 & 3/3
TP15
IC58
BUFFER
MERD L7C B2-10C (TCG/TCR)
TP16
IC58
BUFFER
MEWA L6C B2-9C (TCG/TCR)

NOTE:
IC7 .....Memorizing system control fundmental function data
IC11.....Supporting main CPU with calculation.
IC10.....Memorizing On-screen set-up menu and hour meter data.

B1 (SYSTEM CONTROL) BLOCK DIAGRAM 2/3 (I/O SECTION)

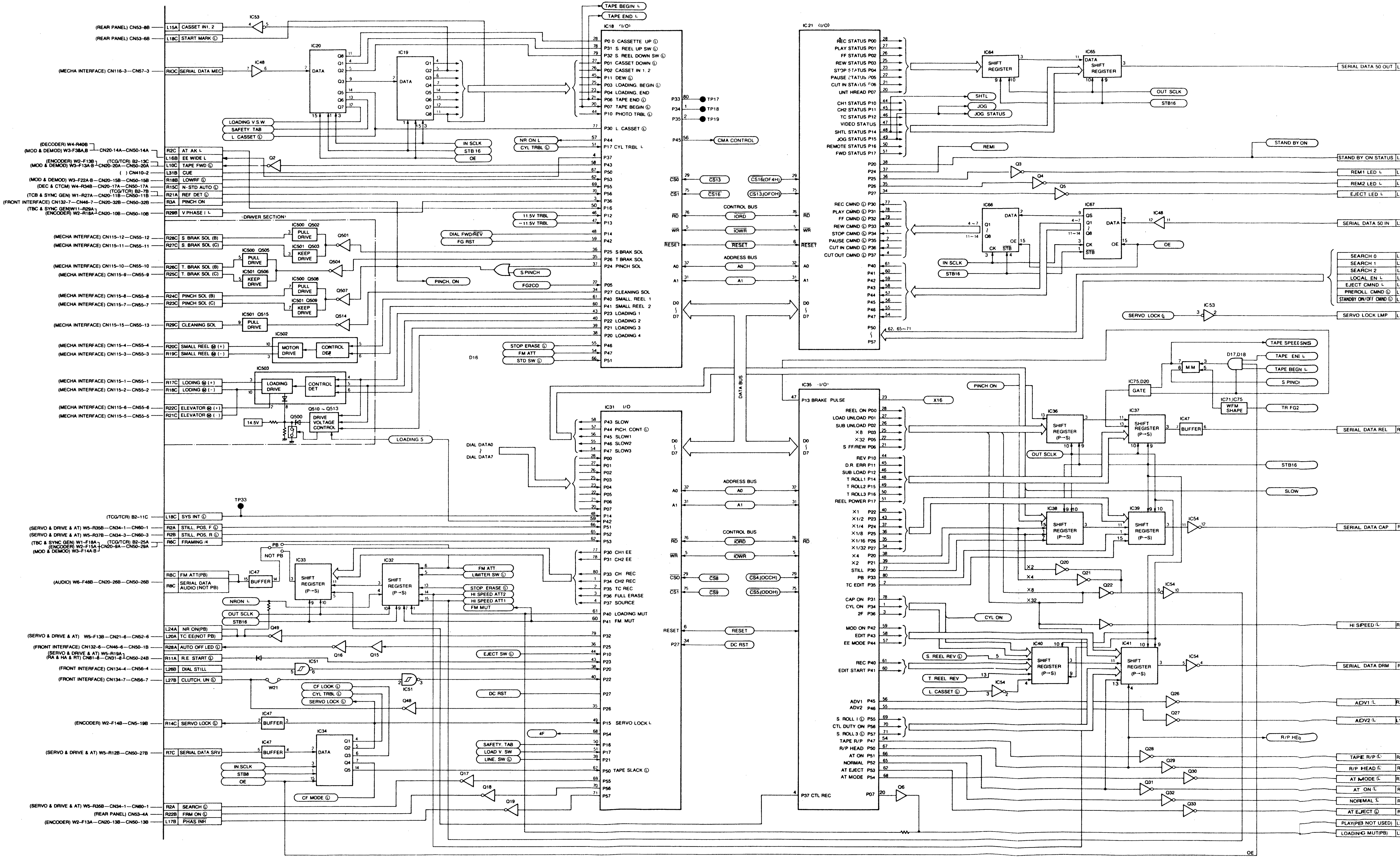
IC53
IC48
IC20
IC19
DATA
IC18 I/O
IC21 I/O
IC64 SHIFT REGISTER
IC65 SHIFT REGISTER
SERIAL DATA 50 OUT
OUT SCLK
STB16
SHTL
JOG
JOG STATUS
REMI
STAND BY ON
STAND BY ON STATUS
REM1 LED L
REM2 LED L
EJECT LED L
IC66
IC67
SERIAL DATA 50 IN
OE
IN SCLK
SEARCH 0
SEARCH 1
SEARCH 2
LOCAL EN L
EJECT CMND L
PREROLL CMND
STANDBY ON/OFF CMND
SERVO LOCK
SERVO LOCK LMP
TAPE BEGIN L
TAPE END L
CASSET IN1, 2
START MARK
SERIAL DATA MEC
LOADING V.S.W
SAFETY TAB
L CASSET
AT AK L
EE WIDE L
TAPE FWD
CUE
LOWRF
N-STD AUTO
REF DET
PINCH ON
V.PHASE I L
DRIVER SECTION
S BRAK SOL (B)
S BRAK SOL (C)
T. BRAK SOL (B)
T. BRAK SOL (C)
PINCH SOL (B)
PINCH SOL (C)
CLEANING SOL
SMALL REEL (+)
SMALL REEL (-)
LODING (+)
LODING (-)
ELEVATOR (+)
ELEVATOR (-)
PULL DRIVE
KEEP DRIVE
MOTOR DRIVE
CONTROL DET
LOADING DRIVE
DRIVE VOLTAGE CONTROL
14.5V
NR ON L
CYL TRBL
CMA CONTROL
CS13
CS16
CONTROL BUS
IORD
IOWR
RESET
ADDRESS BUS
A0
A1
D0 ~ D7
DATA BUS
TP17
TP18
TP19
TP33
11.5V TRBL
-11.5V TRBL
DIAL FWD/REV
FG RST
S PINCH
FG2CO
PINCH ON
STOP ERASE
FM ATT
STD SW
D16
IC31 I/O
LOADING 5
DIAL DATA0 ~ DIAL DATA7
SYS INT
STILL POS. F
STILL POS. R
FRAMING
IC33 SHIFT REGISTER (P→S)
IC32 SHIFT REGISTER (P→S)
IC47 BUFFER
FM ATT(PB)
SERIAL DATA AUDIO (NOT PB)
LIMITER SW
HI SPEED ATT2
HI SPEED ATT1
FM MUT
NRON L
OUT SCLK
STB16
NR ON(PB)
TC EE(NOT PB)
AUTO OFF LED
R.E. START
DIAL STILL
CLUTCH UN
IC51
W21
CF LOOK
CYL TRBL
SERVO LOCK
EJECT SW
DC RST
SERVO LOCK
SERIAL DATA SRV
IC34
IN SCLK
STB8
OE
SAFETY TAB
LOAD V. SW
LINE. SW
CF MODE
4F
SEARCH
FRM ON
PHAS INH
IC35 I/O
P13 BRAKE PULSE
X16
PINCH ON
CS8
CS9
CS4(OCCH)
CS5(ODOH)
CS16(OF4H)
CS13(OFOH)
P37 CTL REC
IC36 SHIFT REGISTER (P→S)
IC37 SHIFT REGISTER (P→S)
IC47 BUFFER
SERIAL DATA REL
IC38 SHIFT REGISTER (P→S)
IC39 SHIFT REGISTER (P→S)
IC54
SERIAL DATA CAP
IC40 SHIFT REGISTER (P→S)
IC41 SHIFT REGISTER (P→S)
SERIAL DATA DRM
S. REEL REV
T. REEL REV
L. CASSET
CYL ON
HI SPEED L
ADV1 L
ADV2 L
R/P HEAD
TAPE R/P
R/P HEAD
AT MODE
AT ON
NORMAL
AT EJECT
PLAY(PB NOT USED)
LOADING MUT(PB)
IC75,D20 GATE
IC71,IC75 WFM SHAPE
MM
D17,D18
TAPE SPEED SNS
TAPE END L
TAPE BEGIN L
S PINCH
TR FG2
SLOW
(REAR PANEL) CN53-8B
(REAR PANEL) CN53-6B
(MECHA INTERFACE) CN116-3—CN57-3
(MECHA INTERFACE) CN115-12—CN55-12
(MECHA INTERFACE) CN115-11—CN55-11
(MECHA INTERFACE) CN115-10—CN55-10
(MECHA INTERFACE) CN115-9—CN55-9
(MECHA INTERFACE) CN115-8—CN55-8
(MECHA INTERFACE) CN115-7—CN55-7
(MECHA INTERFACE) CN115-15—CN55-13
(MECHA INTERFACE) CN115-4—CN55-4
(MECHA INTERFACE) CN115-3—CN55-3
(MECHA INTERFACE) CN115-1—CN55-1
(MECHA INTERFACE) CN115-2—CN55-2
(MECHA INTERFACE) CN115-6—CN55-6
(MECHA INTERFACE) CN115-5—CN55-5
(TCG/TCR) B2-11C
(AUDIO) W6-F48B—CN20-26B—CN50-26B
(FRONT INTERFACE) CN134-4—CN56-4
(FRONT INTERFACE) CN134-7—CN56-7
(ENCODER) W2-F14B—CN5-19B
(SERVO & DRIVE & AT) W5-R12B—CN50-27B
(REAR PANEL) CN53-4A
(ENCODER) W2-F13A—CN20-13B—CN50-13B

DIAGRAM 2/3 (I/O SECTION)

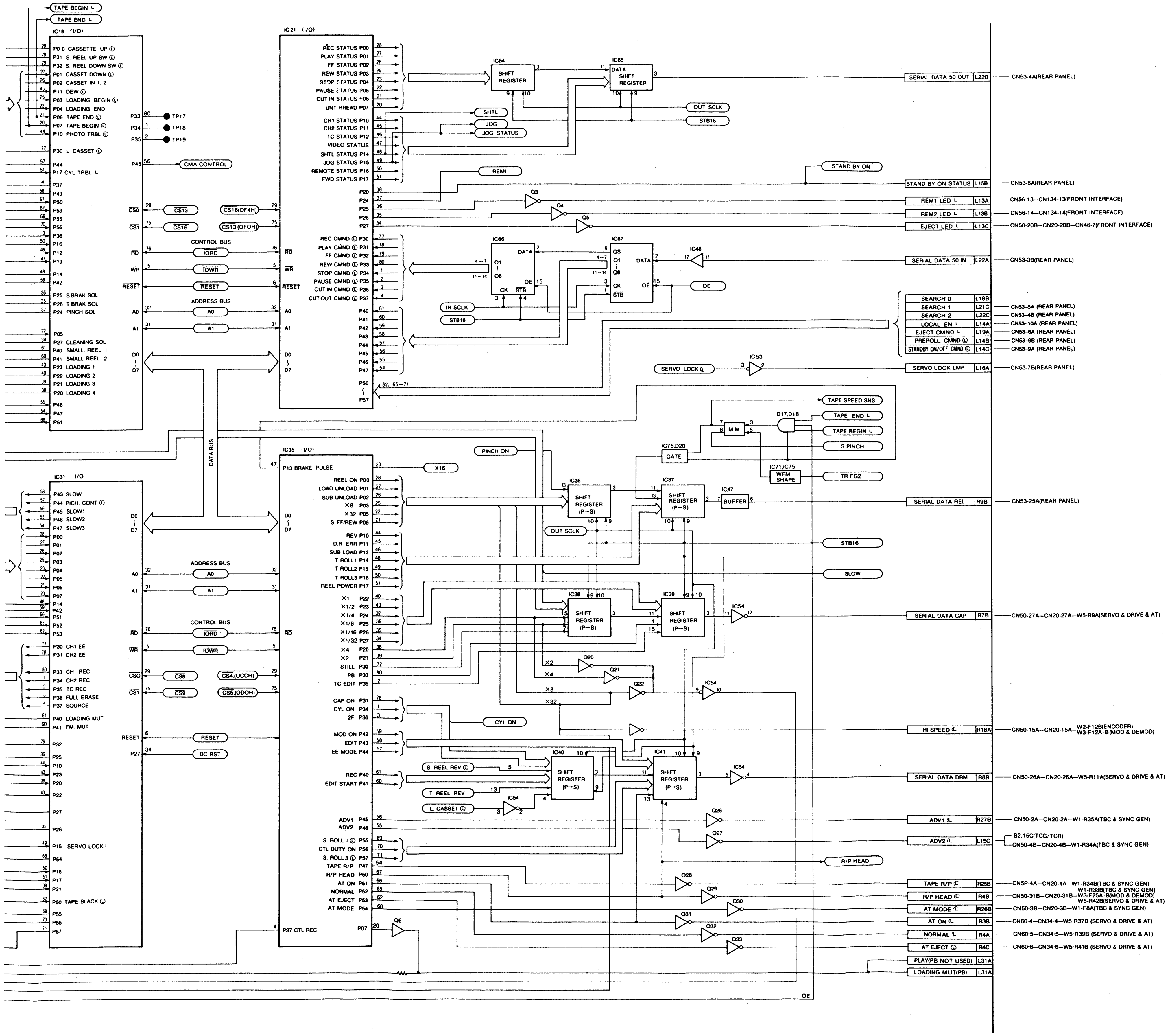
TAPE BEGIN L
TAPE END L
IC18 (I/O)
P0 0 CASSETTE UP Ⓛ
P31 S. REEL UP SW Ⓛ
P32 S. REEL DOWN SW Ⓛ
P01 CASSET DOWN Ⓛ
P02 CASSET IN 1, 2
P11 DEW Ⓛ
P03 LOADING. BEGIN Ⓛ
P04 LOADING. END
P06 TAPE END Ⓛ
P07 TAPE BEGIN Ⓛ
P10 PHOTO TRBL Ⓛ
P30 L. CASSET Ⓛ
P44
P17 CYL TRBL L
P37
P43
P50
P53
P55
P56
P36
P16
P12
P13
P14
P42
P25 S BRAK SOL
P26 T BRAK SOL
P24 PINCH SOL
P05
P27 CLEANING SOL
P40 SMALL. REEL 1
P41 SMALL REEL 2
P23 LOADING 1
P22 LOADING 2
P21 LOADING 3
P20 LOADING 4
P46
P47
P51
P33 TP17
P34 TP18
P35 TP19
P45 CMA CONTROL
CS0 CS13
CS1 CS16
CS16(OF4H)
CS13,(OFOH)
CONTROL BUS
RD IORD
WR IOWR
RESET
ADDRESS BUS
A0
A1
D0 ~ D7
DATA BUS
IC21 (I/O)
REC STATUS P00
PLAY STATUS P01
FF STATUS P02
REW STATUS P03
STOP STATUS P04
PAUSE STATUS P05
CUT IN STATUS P06
UNT HREAD P07
CH1 STATUS P10
CH2 STATUS P11
TC STATUS P12
VIDEO STATUS
SHTL STATUS P14
JOG STATUS P15
REMOTE STATUS P16
FWD STATUS P17
P20
P24
P25
P26
P27
REC CMND Ⓛ P30
PLAY CMND Ⓛ P31
FF CMND Ⓛ P32
REW CMND Ⓛ P33
STOP CMND Ⓛ P34
PAUSE CMND Ⓛ P35
CUT IN CMND Ⓛ P36
CUT OUT CMND Ⓛ P37
P40
P41
P42
P43
P44
P45
P46
P47
P50 ~ P57
62, 65~71
IC64 SHIFT REGISTER
IC65 DATA SHIFT REGISTER
SHTL
JOG
JOG STATUS
OUT SCLK
STB16
REMI
STAND BY ON
Q3
Q4
Q5
IC66 DATA Q1 ~ Q8 OE CK STB
IC67 QS Q1 ~ Q8 DATA CK STB OE
4~7
11~14
IC48
OE
IN SCLK
STB16
SERVO LOCK L
IC53
TAPE SPEED SNS
D17,D18
TAPE END L
TAPE BEGIN L
S PINCH
M.M
IC75,D20
GATE
IC71,IC75
WFM SHAPE
TR FG2
PINCH ON
IC35 (I/O)
P13 BRAKE PULSE
X16
REEL ON P00
LOAD UNLOAD P01
SUB UNLOAD P02
×8 P03
×32 P05
S FF/REW P06
REV P10
D.R ERR P11
SUB LOAD P12
T ROLL1 P14
T ROLL2 P15
T ROLL3 P16
REEL POWER P17
×1 P22
×1/2 P23
×1/4 P24
×1/8 P25
×1/16 P26
×1/32 P27
×4 P20
×2 P21
STILL P30
PB P33
TC EDIT P35
CAP ON P31
CYL ON P34
2F P36
MOD ON P42
EDIT P43
EE MODE P44
REC P40
EDIT START P41
ADV1 P45
ADV2 P46
S. ROLL 1 Ⓛ P55
CTL DUTY ON P56
S. ROLL 3 Ⓛ P57
TAPE R/P P47
R/P HEAD P50
AT ON P51
NORMAL P52
AT EJECT P53
AT MODE P54
P37 CTL REC
P07
Q6
IC36 SHIFT REGISTER (P→S)
IC37 SHIFT REGISTER (P→S)
IC47 BUFFER
IC38 SHIFT REGISTER (P→S)
IC39 SHIFT REGISTER (P→S)
IC54
STB16
SLOW
×2
×4
×8
×32
Q20
Q21
Q22
CYL ON
IC40 SHIFT REGISTER (P→S)
IC41 SHIFT REGISTER (P→S)
S. REEL REV Ⓛ
T. REEL. REV
L. CASSET Ⓛ
Q26
Q27
R/P HEAD
Q28
Q29
Q30
Q31
Q32
Q33
OE
IC31 I/O
P43 SLOW
P44 PICH. CONT Ⓛ
P45 SLOW1
P46 SLOW2
P47 SLOW3
P00
P01
P02
P03
P04
P05
P06
P07
P14
P42
P51
P52
P53
P30 CH1 EE
P31 CH2 EE
P33 CH REC
P34 CH2 REC
P35 TC REC
P36 FULL ERASE
P37 SOURCE
P40 LOADING MUT
P41 FM. MUT
P32
P25
P10
P23
P20
P22
P27
P26
P15 SERVO LOCK L
P54
P16
P17
P21
P50 TAPE SLACK Ⓛ
P55
P56
P57
CS0 CS8
CS1 CS9
CS4,(OCCH)
CS5,(ODOH)
RESET
P27 DC RST
SERIAL DATA 50 OUT L22B — CN53-4A(REAR PANEL)
STAND BY ON STATUS L15B — CN53-8A(REAR PANEL)
REM1 LED L L13A — CN56-13—CN134-13(FRONT INTERFACE)
REM2 LED L L13B — CN56-14—CN134-14(FRONT INTERFACE)
EJECT LED L L13C — CN50-20B—CN20-20B—CN46-7(FRONT INTERFACE)
SERIAL DATA 50 IN L22A — CN53-3B(REAR PANEL)
SEARCH 0 L18B
SEARCH 1 L21C — CN53-5A (REAR PANEL)
SEARCH 2 L22C — CN53-4B (REAR PANEL)
LOCAL. EN L L14A — CN53-10A (REAR PANEL)
EJECT CMND L L19A — CN53-6A (REAR PANEL)
PREROLL. CMND Ⓛ L14B — CN53-9B (REAR PANEL)
STANDBY ON/OFF CMND Ⓛ L14C — CN53-9A (REAR PANEL)
SERVO LOCK LMP L16A — CN53-7B(REAR PANEL)
SERIAL DATA REL R9B — CN53-25A(REAR PANEL)
SERIAL DATA CAP R7B — CN50-27A—CN20-27A—W5-R9A(SERVO & DRIVE & AT)
HI SPEED Ⓛ R18A — CN50-15A—CN20-15A—W2-F12B(ENCODER) W3-F12A·B(MOD & DEMOD)
SERIAL DATA DRM R8B — CN50-26A—CN20-26A—W5-R11A(SERVO & DRIVE & AT)
ADV1 Ⓛ R27B — CN50-2A—CN20-2A—W1-R35A(TBC & SYNC GEN)
ADV2 Ⓛ L15C — B2,15C(TCG/TCR) CN50-4B—CN20-4B—W1-R34A(TBC & SYNC GEN)
TAPE R/P Ⓛ R25B — CN5P-4A—CN20-4A—W1-R34B(TBC & SYNC GEN)
R/P HEAD Ⓛ R4B — CN50-31B—CN20-31B—W1-R33B(TBC & SYNC GEN) W3-F25A·B(MOD & DEMOD) W5-R42B(SERVO & DRIVE & AT)
AT MODE Ⓛ R26B — CN50-3B—CN20-3B—W1-F8A(TBC & SYNC GEN)
AT ON Ⓛ R3B — CN60-4—CN34-4—W5-R37B (SERVO & DRIVE & AT)
NORMAL Ⓛ R4A — CN60-5—CN34-5—W5-R39B (SERVO & DRIVE & AT)
AT EJECT Ⓛ R4C — CN60-6—CN34-6—W5-R41B (SERVO & DRIVE & AT)
PLAY(PB NOT USED) L31A
LOADING MUT(PB) L31A

B1 (SYSTEM CONTROL) BLOCK DIAGRAM 3/3 (GATE ARRY & I/O S

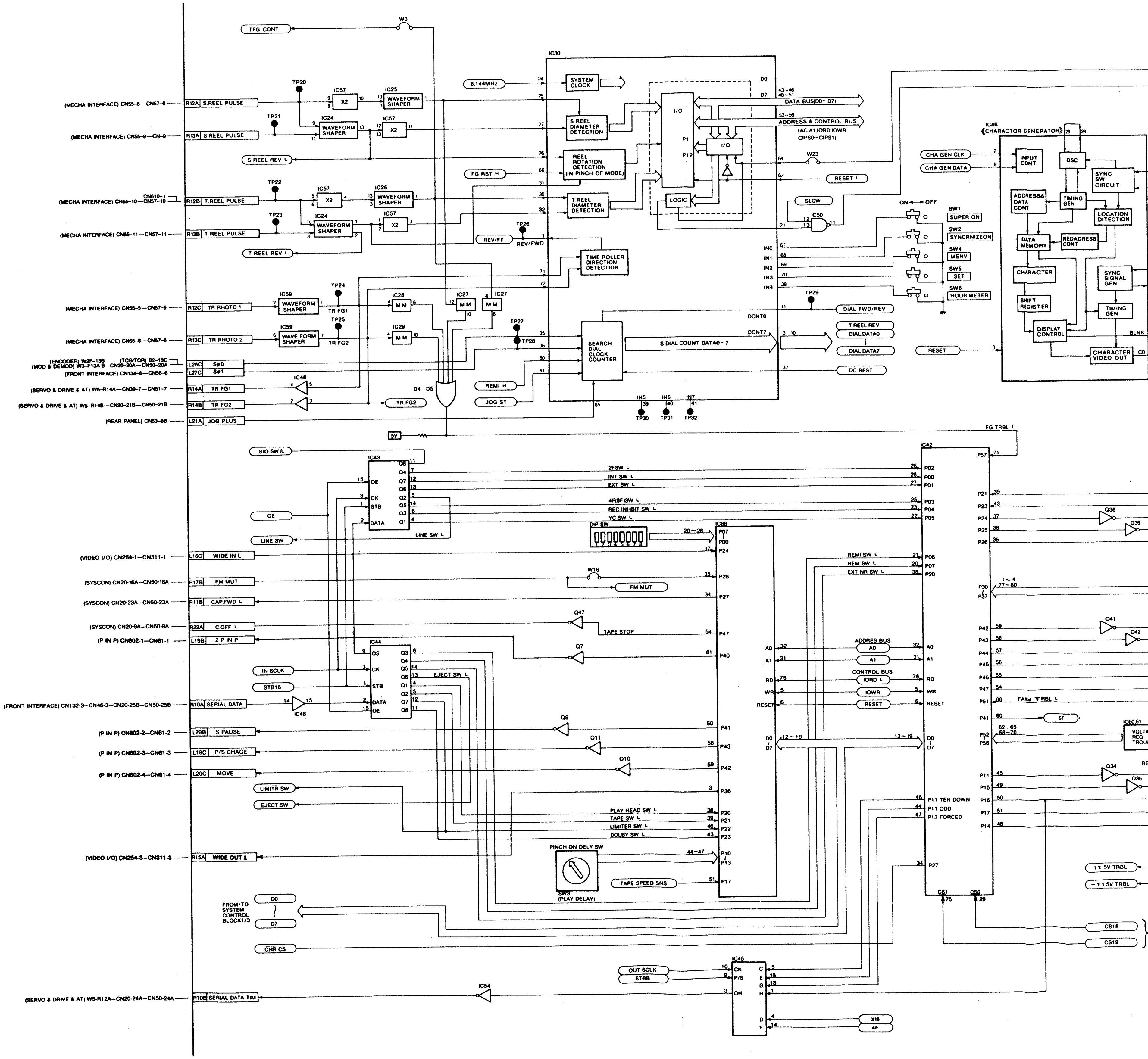
TFG CONT
W3
IC30
6.144MHz
SYSTEM CLOCK
S REEL DIAMETER DETECTION
REEL ROTATION DETECTION (IN PINCH OF MODE)
T REEL DIAMETER DETECTION
TIME ROLLER DIRECTION DETECTION
SEARCH DIAL CLOCK COUNTER
I/O
LOGIC
DATA BUS(D0~D7)
ADDRESS & CONTROL BUS
(AC.A1.IORD.IOWR CIPS0~CIPS1)
S DIAL COUNT DATA0~7
(MECHA INTERFACE) CN55-8—CN57-8
R12A S REEL PULSE
(MECHA INTERFACE) CN55-9—CN-9
R13A S REEL PULSE
(MECHA INTERFACE) CN55-10—CN57-10
R12B T REEL PULSE
(MECHA INTERFACE) CN55-11—CN57-11
R13B T REEL PULSE
(MECHA INTERFACE) CN55-5—CN57-5
R12C TR RHOTO 1
(MECHA INTERFACE) CN55-6—CN57-6
R13C TR RHOTO 2
(ENCODER) W2F-13B (TCG/TCR) B2-13C
(MOD & DEMOD) W3-F13A B CN20-20A—CN50-20A
(FRONT INTERFACE) CN134-6—CN56-6
L26C Sφ0
L27C Sφ1
(SERVO & DRIVE & AT) W5-R14A—CN30-7—CN51-7
R14A TR FG1
(SERVO & DRIVE & AT) W5-R14B—CN20-21B—CN50-21B
R14B TR FG2
(REAR PANEL) CN53-6B
L21A JOG PLUS
TP20 TP21 TP22 TP23 TP24 TP25 TP26 TP27 TP28 TP29 TP30 TP31 TP32
IC57 X2
IC25 WAVEFORM SHAPER
IC24 WAVEFORM SHAPER
IC26 WAVEFORM SHAPER
IC59 WAVEFORM SHAPER
IC28 M M
IC29 M M
IC27 M M
IC48
S REEL REV L
T REEL REV L
FG RST H
REV/FF
REV/FWD
TR FG1
TR FG2
REMI H
JOG ST
D4 D5
IN0 IN1 IN2 IN3 IN4 IN5 IN6 IN7
DCNT0 DCNT7
W23
RESET L
SLOW
IC50
ON ↔ OFF
SW1 SUPER ON
SW2 SYNCRNIZEON
SW4 MENV
SW5 SET
SW6 HOUR METER
DIAL FWD/REV
T REEL REV
DIAL DATA0
DIAL DATA7
DC REST
RESET
IC46 (CHARACTOR GENERATOR)
CHA GEN CLK
CHA GEN DATA
INPUT CONT
OSC
SYNC SW CIRCUIT
ADDRESS& DATA CONT
TIMING GEN
LOCATION DITECTION
DATA MEMORY
REDADRESS CONT
CHARACTER
SHIFT REGISTER
DISPLAY CONTROL
SYNC SIGNAL GEN
TIMING GEN
CHARACTER VIDEO OUT
BLNK
5V
FG TRBL L
SIO SW L
IC43
OE
LINE SW
2FSW L
INT SW L
EXT SW L
4F(6F)SW L
REC INHIBIT SW L
YC SW L
LINE SW L
DIP SW
IC68
(VIDEO I/O) CN254-1—CN311-1
L16C WIDE IN L
(SYSCON) CN20-16A—CN50-16A
R17B FM MUT
W16
FM MUT
(SYSCON) CN20-23A—CN50-23A
R11B CAP.FWD L
(SYSCON) CN20-9A—CN50-9A
R22A C OFF L
Q47
TAPE STOP
(P IN P) CN802-1—CN61-1
L19B 2 P IN P
Q7
IC44
IN SCLK
STB16
EJECT SW L
(FRONT INTERFACE) CN132-3—CN46-3—CN20-25B—CN50-25B
R10A SERIAL DATA
Q9
(P IN P) CN802-2—CN61-2
L20B S PAUSE
Q11
(P IN P) CN802-3—CN61-3
L18C P/S CHAGE
Q10
(P IN P) CN802-4—CN61-4
L20C MOVE
LIMITR SW
EJECT SW
PLAY HEAD SW L
TAPE SW L
LIMITER SW L
DOLBY SW L
PINCH ON DELY SW
SW3 (PLAY DELAY)
TAPE SPEED SNS
(VIDEO I/O) CN254-3—CN311-3
R15A WIDE OUT L
FROM/TO SYSTEM CONTROL BLOCK1/3
D0
D7
CHR CS
ADDRES BUS
A0
A1
CONTROL BUS
IORD L
IOWR
RESET
REMI SW L
REM SW L
EXT NR SW L
IC42
P11 TEN DOWN
P11 ODD
P13 FORCED
FAIM TRBL L
ST
IC60,61 VOLTA REG TROUB
Q38 Q39 Q41 Q42 Q34 Q35
+11.5V TRBL
−11.5V TRBL
CS18
CS19
IC45
OUT SCLK
STBB
IC54
(SERVO & DRIVE & AT) W5-R12A—CN20-24A—CN50-24A
R10B SERIAL DATA TIM
X16
4F

B1 (SYSTEM CONTROL) BLOCK DIAGRAM 3/3 (GATE ARRY & I/O SECTION)

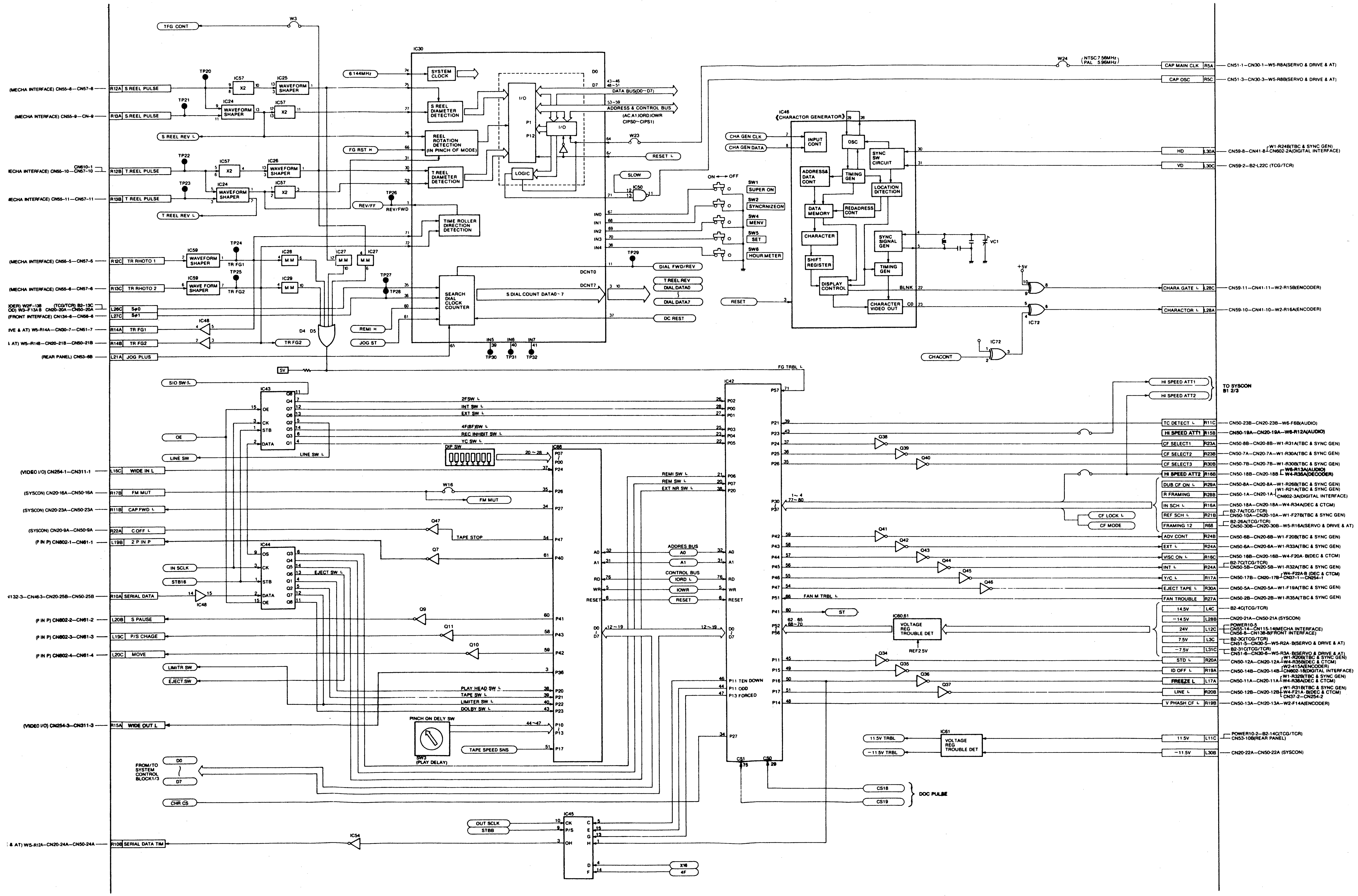
TFG CONT
W3
IC30
6.144MHz
SYSTEM CLOCK
S REEL DIAMETER DETECTION
REEL ROTATION DETECTION (IN PINCH OF MODE)
T REEL DIAMETER DETECTION
TIME ROLLER DIRECTION DETECTION
SEARCH DIAL CLOCK COUNTER
S DIAL COUNT DATA0~7
I/O
P1
P12
LOGIC
D0
D7
DATA BUS(D0~D7)
ADDRESS & CONTROL BUS
(AC.A1.IORD.IOWR
CIPS0~CIPS1)
W23
RESET L
SLOW
IC50
IN0
IN1
IN2
IN3
IN4
DCNT0
DCNT7
TP29
DIAL FWD/REV
T.REEL.REV
DIAL.DATA0
DIAL.DATA7
DC REST
IN5
IN6
IN7
TP30
TP31
TP32
ON ←→ OFF
SW1 SUPER ON
SW2 SYNCRNIZEON
SW4 MENV
SW5 SET
SW6 HOUR.METER
(MECHA INTERFACE) CN55-8—CN57-8
R12A S.REEL PULSE
(MECHA INTERFACE) CN55-9—CN-9
R13A S.REEL PULSE
CN610-1
(MECHA INTERFACE) CN55-10—CN57-10
R12B T.REEL PULSE
(MECHA INTERFACE) CN55-11—CN57-11
R13B T REEL PULSE
TP20
TP21
TP22
TP23
IC57 X2
IC25 WAVEFORM SHAPER
IC24 WAVEFORM SHAPER
IC26 WAVEFORM SHAPER
S REEL REV L
T REEL REV L
FG RST H
REV/FF
TP26
REV/FWD
(MECHA INTERFACE) CN55-5—CN57-5
R12C TR RHOTO 1
(MECHA INTERFACE) CN55-6—CN57-6
R13C TR RHOTO 2
IC59 WAVEFORM SHAPER
IC59 WAVE FORM SHAPER
TP24
TR FG1
TP25
TR FG2
IC28 M.M
IC29 M.M
IC27 M.M
TP27
TP28
(ENCODER) W2F-13B (TCG/TCR) B2-13C
(ENCODER) W3-F13A.B CN20-20A—CN50-20A
L26C Sφ0
(FRONT INTERFACE) CN134-6—CN56-6
L27C Sφ1
(SERVO & DRIVE & AT) W5-R14A—CN30-7—CN51-7
R14A TR FG1
(SERVO & DRIVE & AT) W5-R14B—CN20-21B—CN50-21B
R14B TR FG2
IC48
TR FG2
D4 D5
REMI H
JOG ST
(REAR PANEL) CN53-6B
L21A JOG PLUS
5V
FG TRBL L
W24
(NTSC 7.56MHz
PAL 5.96MHz)
CAP MAIN CLK R5A
CN51-1—CN30-1—W5-R8A(SERVO & DRIVE & AT)
CAP OSC R5C
CN51-3—CN30-3—W5-R8B(SERVO & DRIVE & AT)
IC46
(CHARACTOR GENERATOR)
CHA GEN CLK
CHA GEN DATA
INPUT CONT
OSC
SYNC SW CIRCUIT
ADDRESS& DATA CONT
TIMING GEN
LOCATION DITECTION
DATA MEMORY
REDADRESS CONT
CHARACTER
SYNC SIGNAL GEN
SHIFT REGISTER
DISPLAY CONTROL
CHARACTER VIDEO OUT
BLNK
C0
RESET
VC1
+5V
IC72
CHACONT
HD L30A
CN59-8—CN41-8—W1-R24B(TBC & SYNC GEN)
CN602-2A(DIGITAL INTERFACE)
VD L30C
CN59-2—B2-L22C (TCG/TCR)
CHARA GATE L L28C
CN59-11—CN41-11—W2-R15B(ENCODER)
CHARACTOR L L28A
CN59-10—CN41-10—W2-R16A(ENCODER)
SIO SW L
IC43
OE
CK
STB
DATA
LINE SW
LINE SW L
2FSW L
INT SW L
EXT SW L
4F(8F)SW L
REC INHBIT SW L
YC SW L
DIP SW
IC68
P07~P00
P24
(VIDEO I/O) CN254-1—CN311-1
L16C WIDE IN L
(SYSCON) CN20-16A—CN50-16A
R17B FM MUT
W16
FM MUT
P26
(SYSCON) CN20-23A—CN50-23A
R11B CAP.FWD L
P27
(SYSCON) CN20-9A—CN50-9A
R22A C.OFF L
Q47
TAPE STOP
P47
(P IN P) CN802-1—CN61-1
L19B 2 P IN P
Q7
P40
IC44
OS
IN SCLK
STB16
EJECT SW L
(SYSCON) CN132-3—CN46-3—CN20-25B—CN50-25B
R10A SERIAL DATA
IC48
(P IN P) CN802-2—CN61-2
L20B S PAUSE
Q9
P41
(P IN P) CN802-3—CN61-3
L19C P/S CHAGE
Q11
P43
(P IN P) CN802-4—CN61-4
L20C MOVE
Q10
P42
LIMITR SW
EJECT SW
P36
PLAY HEAD SW L
TAPE SW L
LIMITER SW L
DOLBY SW L
P20
P21
P22
P23
PINCH ON DELY SW
SW3 (PLAY DELAY)
P10~P13
TAPE SPEED SNS
P17
(VIDEO I/O) CN254-3—CN311-3
R15A WIDE OUT L
FROM/TO SYSTEM CONTROL BLOCK1/3
D0
D7
CHR CS
A0
A1
RD
WR
RESET
ADDRES BUS
CONTROL BUS
IORD L
IOWR
RESET
IC42
P57
P02
P00
P01
P03
P04
P05
REMI SW L
REM SW L
EXT NR SW L
P06
P07
P11 TEN DOWN
P11 ODD
P13 FORCED
CS1
CS0
CS18
CS19
DOC PULSE
P21
P23
P24
P25
P26
P30~P37
P42
P43
P44
P45
P46
P47
P51
FAN M TRBL L
P41
ST
P52~P56
IC60,61
VOLTAGE REG TROUBLE DET
REF2.5V
P11
P15
P16
P17
P14
Q38
Q39
Q40
Q41
Q42
Q43
Q44
Q45
Q46
Q34
Q35
Q36
Q37
CF LOCK L
CF MODE
HI SPEED ATT1
HI SPEED ATT2
TO SYSCON B1 2/3
TC DETECT L R11C
CN50-23B—CN20-23B—W6-F6B(AUDIO)
HI SPEED ATT1 R15B
CN50-19A—CN20-19A—W6-R12A(AUDIO)
CF SELECT1 R23A
CN50-8B—CN20-8B—W1-R31A(TBC & SYNC GEN)
CF SELECT2 R23B
CN50-7A—CN20-7A—W1-R30A(TBC & SYNC GEN)
CF SELECT3 R30B
CN50-7B—CN20-7B—W1-R30B(TBC & SYNC GEN)
HI SPEED ATT2 R16B
CN50-18B—CN20-18B W6-R13A(AUDIO) W4-R35A(DECODER)
DUB CF ON L R29A
CN50-8A—CN20-8A—W1-R26B(TBC & SYNC GEN)
R FRAMING R28B
CN50-1A—CN20-1A W1-R21A(TBC & SYNC GEN) CN602-3A(DIGITAL INTERFACE)
IN SCH L R16A
CN50-18A—CN20-18A—W4-R34A(DEC & CTCM)
REF SCH L R21B
B2-7A(TCG/TCR)
CN50-10A—CN20-10A—W1-F27B(TBC & SYNC GEN)
FRAMING 12 R68
B2-26A(TCG/TCR)
CN50-30B—CN20-30B—W5-R16A(SERVO & DRIVE & AT)
ADV CONT R24B
CN50-6B—CN20-6B—W1-F20B(TBC & SYNC GEN)
EXT L R24A
CN50-6A—CN20-6A—W1-R33A(TBC & SYNC GEN)
VISC ON L R16C
CN50-16B—CN20-16B—W4-F20A.B(DEC & CTCM)
INT L R24A
B2-7C(TCG/TCR)
CN50-5B—CN20-5B—W1-R32A(TBC & SYNC GEN)
Y/C L R17A
CN50-17B—CN20-17B W4-F22A.B (DEC & CTCM) CN37-1—CN254-1
EJECT TAPE L R30A
CN50-5A—CN20-5A—W1-F19A(TBC & SYNC GEN)
FAN TROUBLE R27A
CN50-2B—CN20-2B—W1-R35A(TBC & SYNC GEN)
14.5V L4C
B2-4C(TCG/TCR)
−14.5V L28B
CN20-21A—CN50-21A (SYSCON)
24V L12C
POWER10-5
CN55-14—CN115-14(MECHA INTERFACE)
CN56-8—CN138-8(FRONT INTERFACE)
7.5V L3C
B2-3C(TCG/TCR)
CN51-5—CN30-5—W5-R2A.B(SERVO & DRIVE & AT)
−7.5V L31C
B2-31C(TCG/TCR)
CN51-6—CN30-6—W5-R3A.B(SERVO & DRIVE & AT)
STD L R20A
CN50-12A—CN20-12A W1-R20B(TBC & SYNC GEN) W4-R35B(DEC & CTCM)
ID OFF L R19A
CN50-14B—CN20-14B W2-415A(ENCODER) CN602-18(DIGITAL INTERFACE)
FREEZE L L17A
CN50-11A—CN20-11A W1-R32B(TBC & SYNC GEN) W4-R38A(DEC & CTCM)
LINE L R20B
CN50-12B—CN20-12B W1-R31B(TBC & SYNC GEN) W4-F21A.B(DEC & CTCM) CN37-2—CN254-2
V PHASH CF L R19B
CN50-13A—CN20-13A—W2-F14A(ENCODER)
11.5V TRBL
−11.5V TRBL
IC61
VOLTAGE REG TROUBLE DET
11.5V L11C
POWER10-2—B2-14C(TCG/TCR)
CN53-10B(REAR PANEL)
−11.5V L30B
CN20-22A—CN50-22A (SYSCON)
IC45
OUT SCLK
STBB
CK
P/S
OH
X16
4F
IC54
(SERVO & DRIVE & AT) W5-R12A—CN20-24A—CN50-24A
R10B SERIAL DATA TIM

FRONT PANEL A,B BLOCK DIAGRAM[FOR AU-65H]

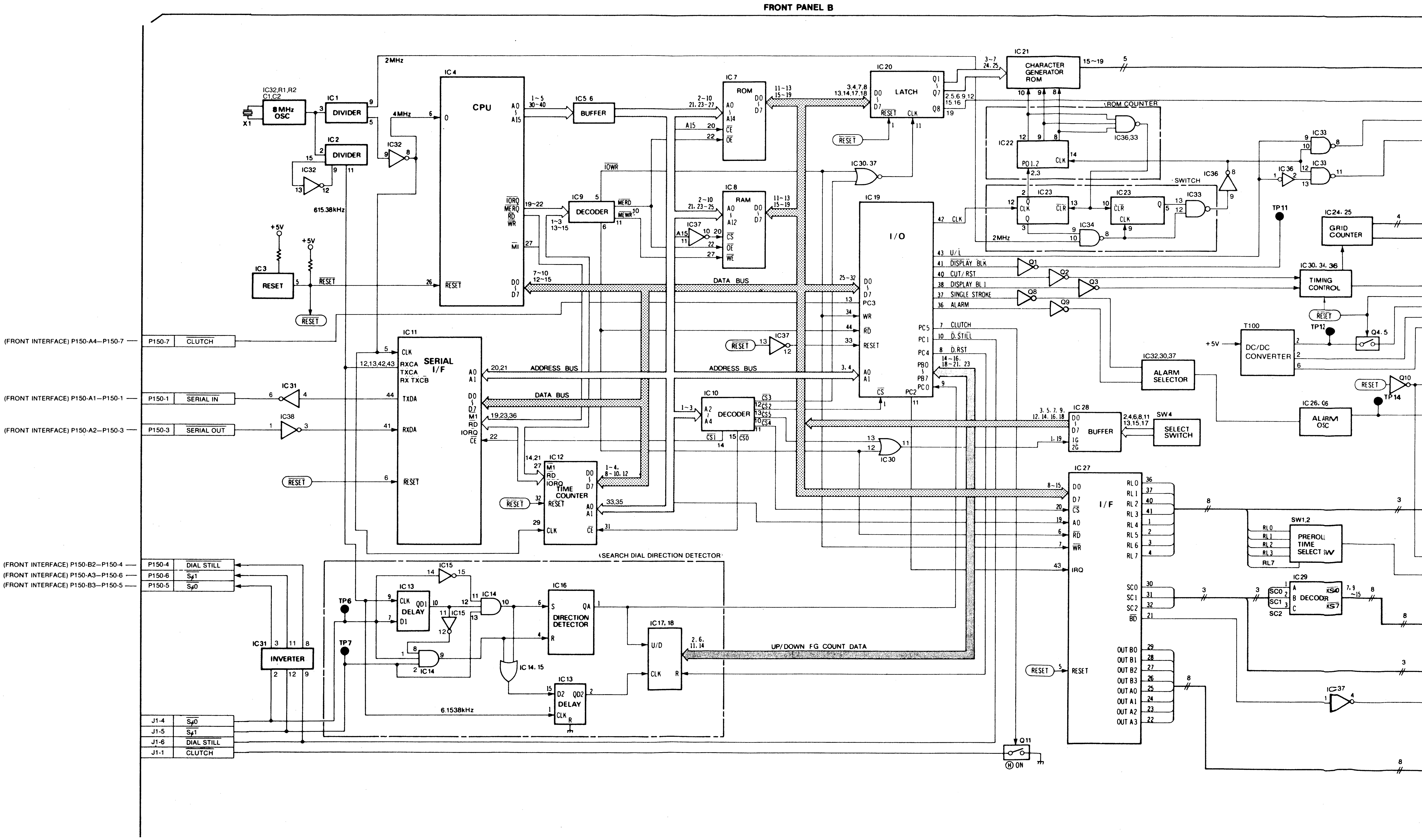
FRONT PANEL B
2MHz
IC32,R1,R2
C1,C2
X1
8MHz OSC
IC1
DIVIDER
IC2
DIVIDER
IC32
615.38kHz
4MHz
IC4
CPU
A0
A15
IORQ
MERQ
RD
WR
MI
RESET
D0
D7
IC5 6
BUFFER
IC9
DECODER
IOWR
MERD
MEWR
IC7
ROM
A14
CE
OE
IC8
RAM
A12
CS
WE
IC37
IC20
LATCH
Q1
Q7
Q8
CLK
IC21
CHARACTER GENERATOR ROM
ROM COUNTER
IC22
IC36,33
IC23
IC33
IC34
SWITCH
IC36
CLR
IC30, 37
IC19
I/O
DATA BUS
ADDRESS BUS
PC3
PC5
PC1
PC4
PB0
PB7
PC0
PC2
U/L
DISPLAY BLK
CUT/RST
DISPLAY BL I
SINGLE STROKE
ALARM
CLUTCH
D.STILL
D.RST
Q1
Q2
Q3
Q8
Q9
TP11
IC24, 25
GRID COUNTER
IC30, 34, 36
TIMING CONTROL
TP12
Q4, 5
T100
+5V
DC/DC CONVERTER
IC32,30,37
ALARM SELECTOR
Q10
TP14
IC26, Q6
ALARM OSC
IC3
RESET
+5V
IC11
SERIAL I/F
CLK
RXCA
TXCA
RX TXCB
TXDA
RXDA
CE
IC31
IC38
IC10
DECODER
CS0
CS1
CS2
CS3
CS4
CS5
IC30
IC28
BUFFER
SW4
SELECT SWITCH
IC12
TIME COUNTER
IC27
I/F
IRQ
RL0
RL7
SC0
SC1
SC2
BD
OUT B0
OUT B1
OUT B2
OUT B3
OUT A0
OUT A1
OUT A2
OUT A3
SW1,2
PREROLL TIME SELECT SW
IC29
DECODER
KS0
KS7
IC37
SEARCH DIAL DIRECTION DETECTOR
IC15
IC13
DELAY
IC14
IC16
DIRECTION DETECTOR
IC17, 18
U/D
UP/DOWN FG COUNT DATA
IC14, 15
6.1538kHz
TP6
TP7
IC31
INVERTER
(FRONT INTERFACE) P150-A4—P150-7
(FRONT INTERFACE) P150-A1—P150-1
(FRONT INTERFACE) P150-A2—P150-3
(FRONT INTERFACE) P150-B2—P150-4
(FRONT INTERFACE) P150-A3—P150-6
(FRONT INTERFACE) P150-B3—P150-5
P150-7 CLUTCH
P150-1 SERIAL IN
P150-3 SERIAL OUT
P150-4 DIAL STILL
P150-6 Sϕ1
P150-5 Sϕ0
J1-4 Sϕ0
J1-5 Sϕ1
J1-6 DIAL STILL
J1-1 CLUTCH
Q11
H ON

R AU-65H]

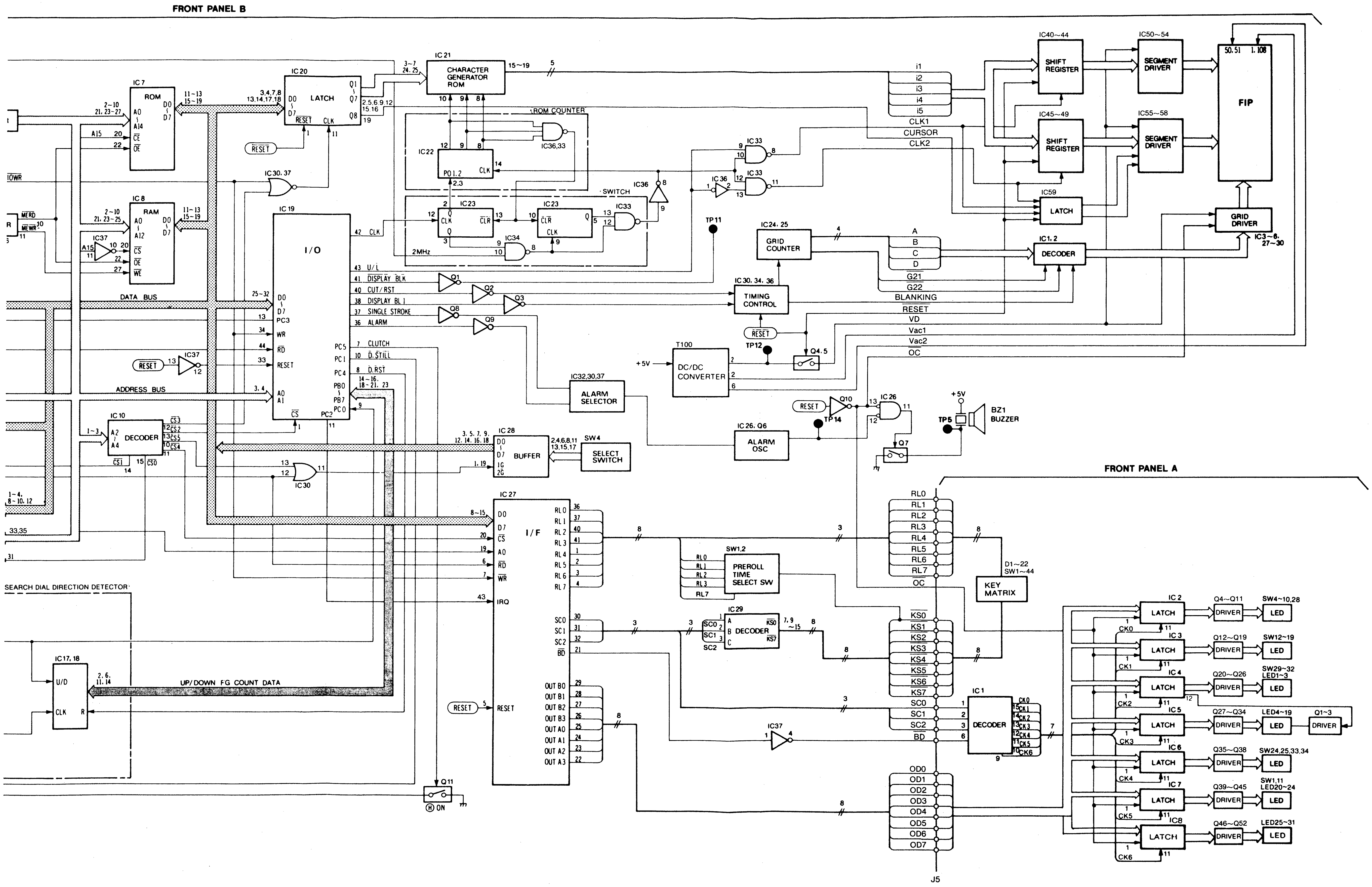
FRONT PANEL B
IC7
ROM
A0 ~ A14
D0 ~ D7
CE
OE
A15
2~10 21, 23~27
11~13 15~19
IC8
RAM
A0 ~ A12
CS
OE
WE
2~10 21, 23~25
IC37
MERD
MEWR
IOWR
IC20
LATCH
D0 ~ D7
Q1 ~ Q7
Q8
RESET
CLK
3,4,7,8 13,14,17,18
2,5,6,9,12 15,16
IC21
CHARACTER GENERATOR ROM
3~7 24, 25
15~19
ROM COUNTER
IC22
PO1, 2
CLK
IC36,33
IC23
CLR
SWITCH
IC34
2MHz
IC36
IC33
IC30, 37
IC19
I/O
42 CLK
43 U/L
41 DISPLAY BLK
40 CUT/RST
38 DISPLAY BL I
37 SINGLE STROKE
36 ALARM
7 CLUTCH
10 D.STILL
8 D.RST
14~16, 18~21, 23
PC3
WR
RD
RESET
A0
A1
CS
PC5
PC1
PC4
PB0 ~ PB7
PC0
PC2
DATA BUS
ADDRESS BUS
RESET
Q1
Q2
Q3
Q8
Q9
IC10
DECODER
A2 ~ A4
CS1
CS0
CS2
CS3
CS4
CS5
IC30
IC28
BUFFER
3, 5, 7, 9, 12, 14, 16, 18
2,4,6,8,11 13,15,17
1G
2G
SW4
SELECT SWITCH
IC27
I/F
D0 ~ D7
CS
A0
RD
WR
IRQ
RL0 ~ RL7
SC0
SC1
SC2
BD
OUT B0
OUT B1
OUT B2
OUT B3
OUT A0
OUT A1
OUT A2
OUT A3
RESET
SEARCH DIAL DIRECTION DETECTOR
IC17, 18
U/D
CLK
R
2, 6, 11, 14
UP/DOWN FG COUNT DATA
Q11
H ON
IC32,30,37
ALARM SELECTOR
T100
DC/DC CONVERTER
+5V
TP11
TP12
TP14
TP5
IC24, 25
GRID COUNTER
IC30, 34, 36
TIMING CONTROL
Q4, 5
IC26, Q6
ALARM OSC
Q10
IC26
Q7
+5V
BZ1
BUZZER
i1
i2
i3
i4
i5
CLK1
CURSOR
CLK2
A
B
C
D
G21
G22
BLANKING
RESET
VD
Vac1
Vac2
OC
IC40~44
SHIFT REGISTER
IC45~49
IC50~54
SEGMENT DRIVER
IC55~58
IC59
LATCH
IC1, 2
DECODER
GRID DRIVER
IC3~6, 27~30
FIP
50, 51
1, 108
FRONT PANEL A
RL0
RL1
RL2
RL3
RL4
RL5
RL6
RL7
OC
SW1,2
PRELOLL TIME SELECT SW
D1~22 SW1~44
KEY MATRIX
IC29
DECODER
SC0
SC1
SC2
KS0
KS7
KS0 ~ KS7
SC0
SC1
SC2
BD
IC37
IC1
DECODER
CK0 ~ CK6
OD0 ~ OD7
J5
IC2
IC3
IC4
IC5
IC6
IC7
IC8
LATCH
DRIVER
LED
Q4~Q11
Q12~Q19
Q20~Q26
Q27~Q34
Q35~Q38
Q39~Q45
Q46~Q52
SW4~10,28
SW12~19
SW29~32 LED1~3
LED4~19
Q1~3
SW24,25,33,34
SW1,11 LED20~24
LED25~31

VIDEO I/O BLOCK DIAGRAM 1/2

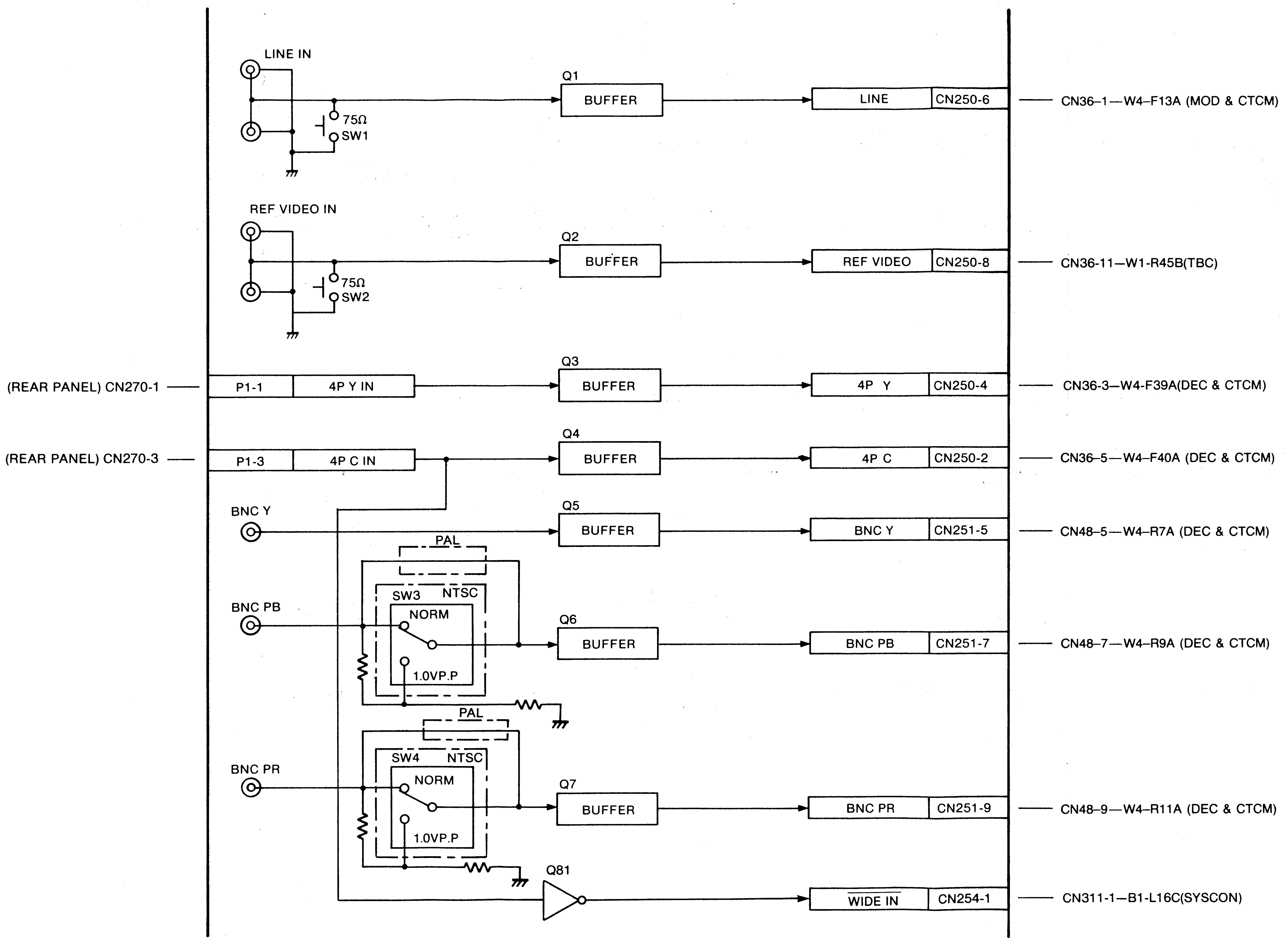
LINE IN
75Ω
SW1
Q1
BUFFER
LINE
CN250-6
CN36-1—W4-F13A (MOD & CTCM)
REF VIDEO IN
75Ω
SW2
Q2
BUFFER
REF VIDEO
CN250-8
CN36-11—W1-R45B(TBC)
(REAR PANEL) CN270-1
P1-1
4P Y IN
Q3
BUFFER
4P Y
CN250-4
CN36-3—W4-F39A(DEC & CTCM)
(REAR PANEL) CN270-3
P1-3
4P C IN
Q4
BUFFER
4P C
CN250-2
CN36-5—W4-F40A (DEC & CTCM)
BNC Y
Q5
BUFFER
BNC Y
CN251-5
CN48-5—W4-R7A (DEC & CTCM)
PAL
SW3
NTSC
NORM
1.0VP.P
BNC PB
Q6
BUFFER
BNC PB
CN251-7
CN48-7—W4-R9A (DEC & CTCM)
PAL
SW4
NTSC
NORM
1.0VP.P
BNC PR
Q7
BUFFER
BNC PR
CN251-9
CN48-9—W4-R11A (DEC & CTCM)
Q81
WIDE IN
CN254-1
CN311-1—B1-L16C(SYSCON)

VIDEO I/O BLOCK DIAGRAM 2/2

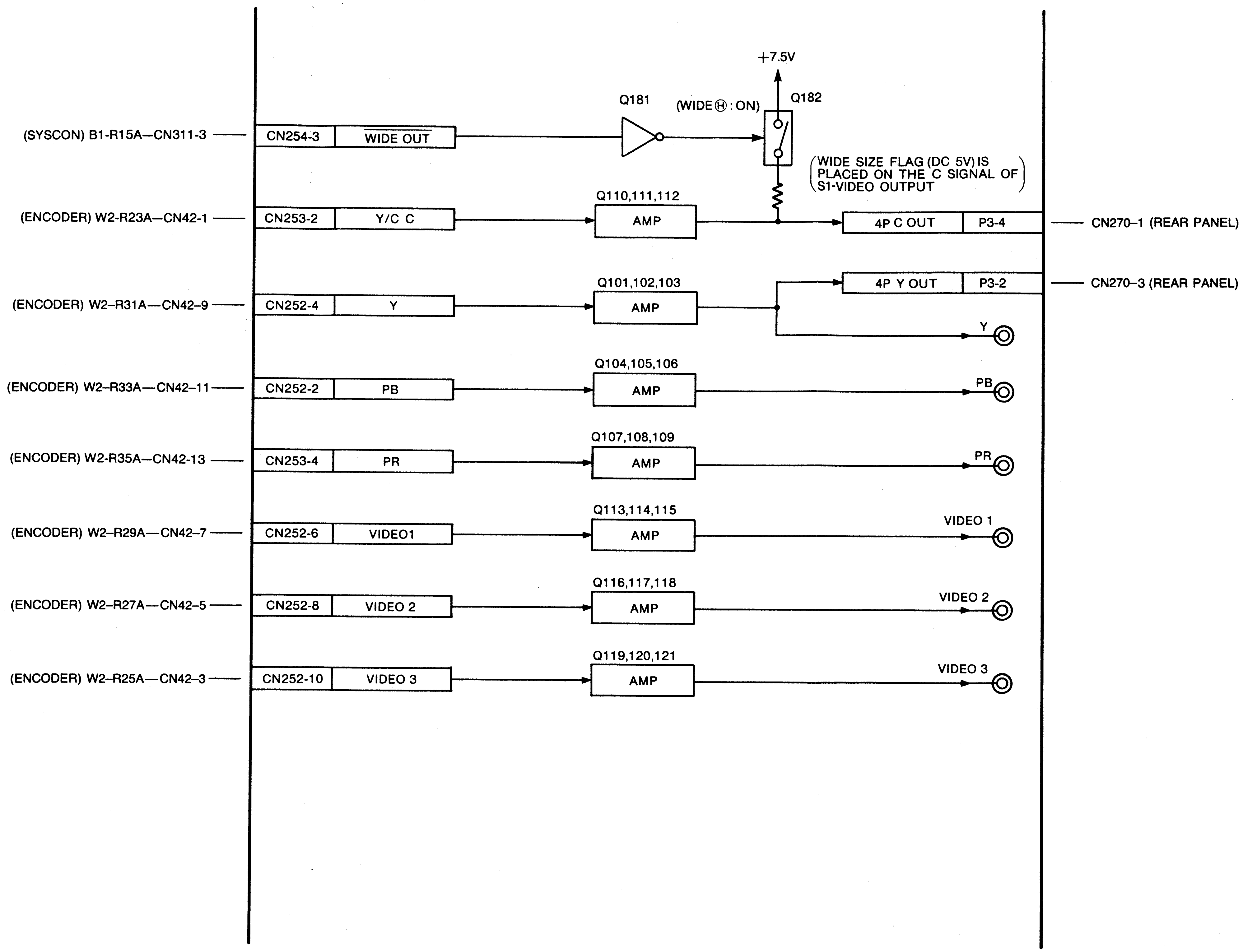
+7.5V
Q181
(WIDE Ⓗ : ON)
Q182
(SYSCON) B1-R15A—CN311-3
CN254-3
WIDE OUT
(WIDE SIZE FLAG (DC 5V) IS PLACED ON THE C SIGNAL OF S1-VIDEO OUTPUT)
Q110,111,112
(ENCODER) W2-R23A—CN42-1
CN253-2
Y/C C
AMP
4P C OUT
P3-4
CN270-1 (REAR PANEL)
Q101,102,103
4P Y OUT
P3-2
CN270-3 (REAR PANEL)
(ENCODER) W2-R31A—CN42-9
CN252-4
Y
AMP
Y
Q104,105,106
(ENCODER) W2-R33A—CN42-11
CN252-2
PB
AMP
PB
Q107,108,109
(ENCODER) W2-R35A—CN42-13
CN253-4
PR
AMP
PR
Q113,114,115
VIDEO 1
(ENCODER) W2-R29A—CN42-7
CN252-6
VIDEO1
AMP
Q116,117,118
VIDEO 2
(ENCODER) W2-R27A—CN42-5
CN252-8
VIDEO 2
AMP
Q119,120,121
VIDEO 3
(ENCODER) W2-R25A—CN42-3
CN252-10
VIDEO 3
AMP

P.C.BOARD DIAGRAM

W0(MOTHER1) P.C.BOARD SCM-25
W1(TBC & SYNC GEN) P.C.BOARD SCM-26
W2(ENCODER) P.C.BOARD SCM-29
W4(DECODER) P.C.BOARD(NTSC) SCM-30
W4(DECODER) SUB P.C.BOARD SCM-30
W4(DECODER) P.C.BOARD(PAL) SCM-33
SENC & P IN P P.C.BOARD SCM-34
W6(AUDIO) P.C.BOARD SCM-35
B0(MOTHER2) P.C.BOARD SCM-36
B1(SYSTEM CONTROL) P.C.BOARD SCM-36
VIDEO I/O P.C.BOARD SCM-37
AUDIO I/O P.C.BOARD SCM-37
FRONT INTERFACE P.C.BOARD SCM-38
FRONT PANEL A P.C.BOARD(AU-65H) SCM-38
FRONT PANEL B P.C.BOARD(AU-65H) SCM-39
METER CHANGE SW P.C.BOARD SCM-39
METER LAMP P.C.BOARD SCM-39

INTERCONNECTION 1/4

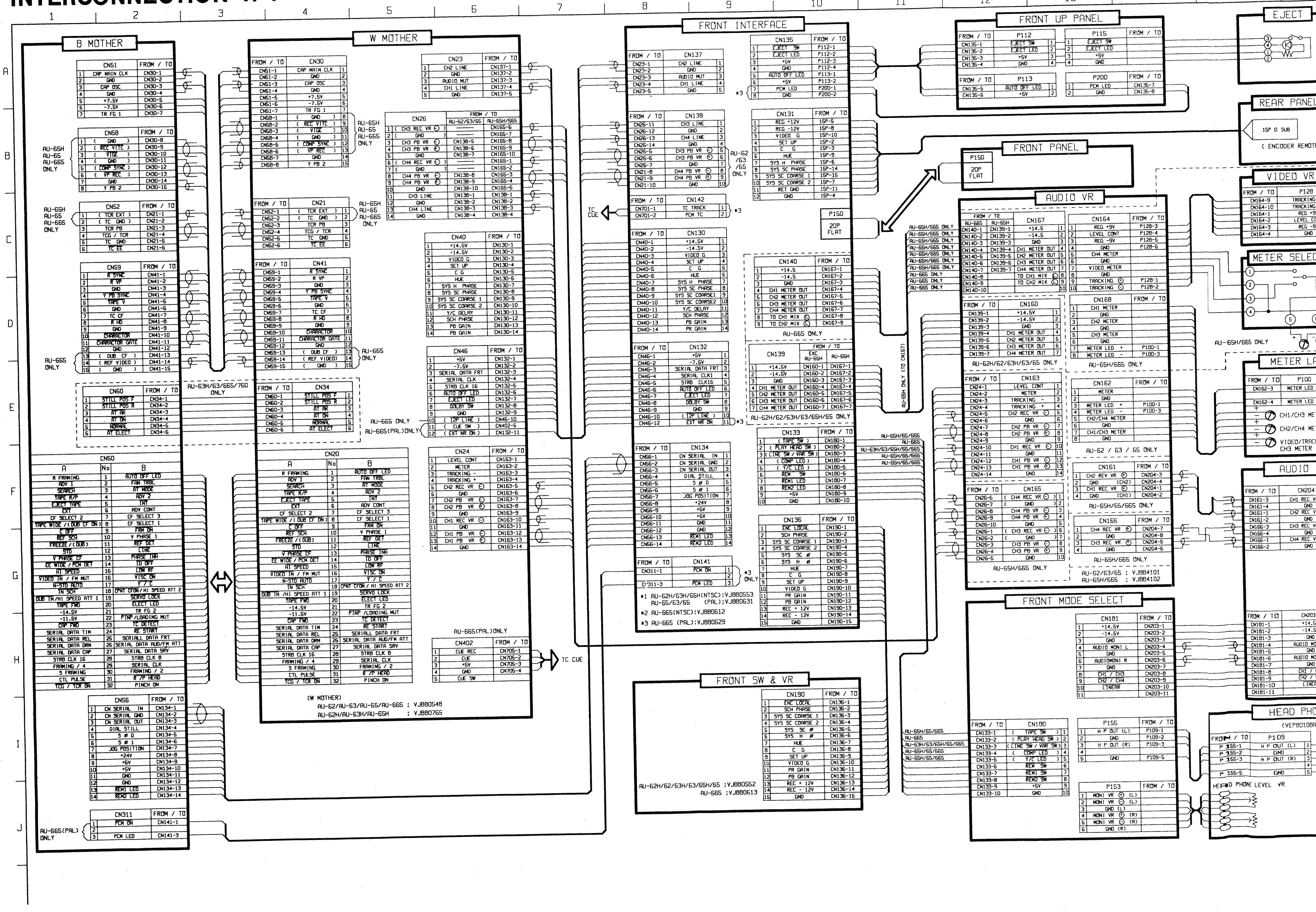

B MOTHER
W MOTHER
FRONT INTERFACE
FRONT UP PANEL
EJECT
REAR PANEL
FRONT PANEL
AUDIO VR
VIDEO VR
METER SELE
METER LA
AUDIO
FRONT MODE SELECT
HEAD PHO
FRONT SW & VR
TC CUE
*1 AU-62H/63H/65H(NTSC):VJB80553
AU-65/63/65 (PAL):VJB80631
*2 AU-665(NTSC):VJB80612
*3 AU-665 (PAL):VJB80629
(W MOTHER)
AU-62/AU-63/AU-65/AU-665 : VJB80548
AU-62H/AU-63H/AU-65H : VJB80765
AU-62H/62/63H/63/65H/65 :VJB80552
AU-665 :VJB80613
AU-62/63/65 : VJB84101
AU-65H/665 : VJB84102

INTERCONNECTION 2/4

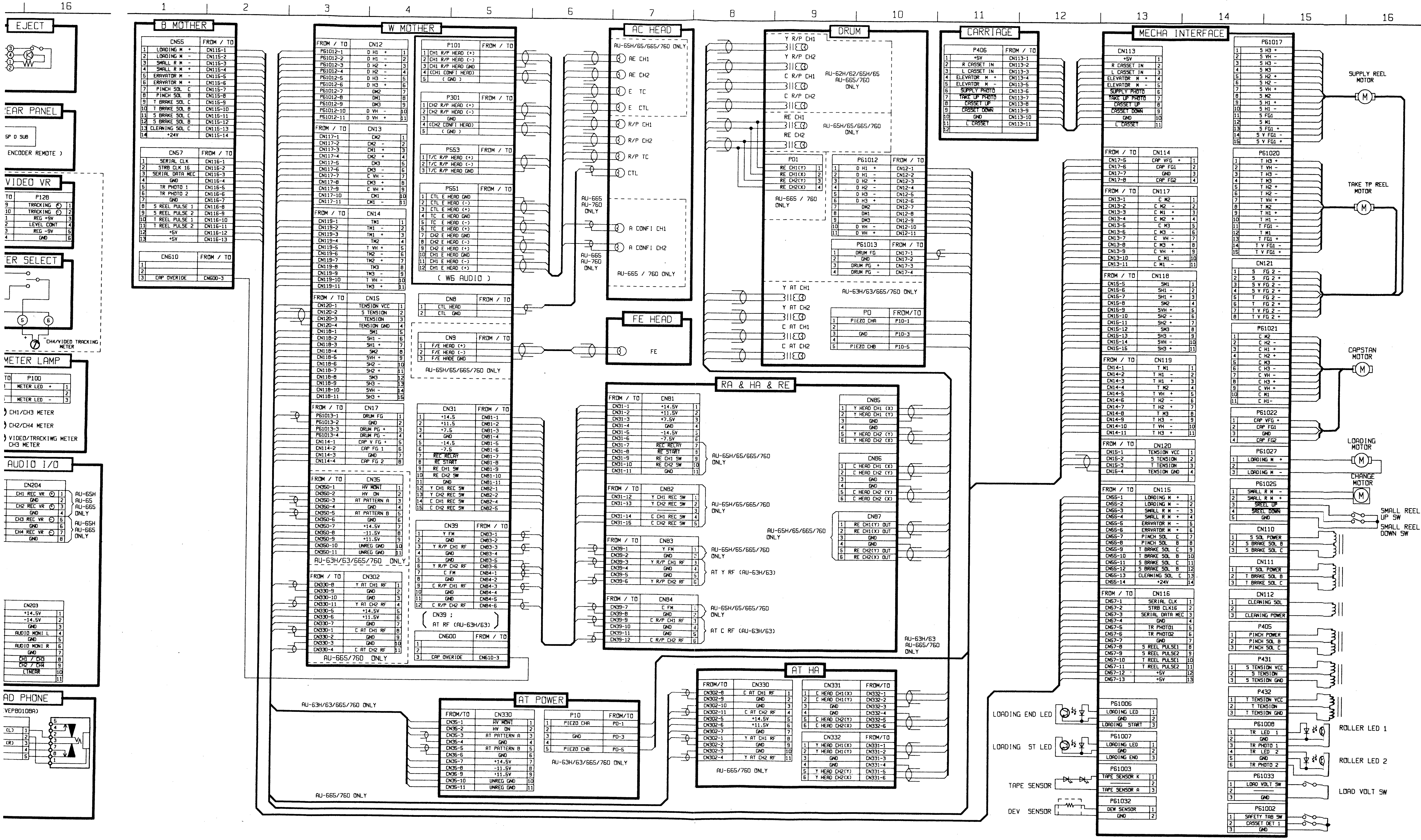

16
1
2
3
4
5
6
7
8
9
10
11
12
13
14
15
16
EJECT
EAR PANEL
ENCODER REMOTE
VIDEO VR
ER SELECT
CH4/VIDEO TRACKING METER
METER LAMP
CH1/CH3 METER
CH2/CH4 METER
VIDEO/TRACKING METER
CH3 METER
AUDIO I/O
AD PHONE
B MOTHER
W MOTHER
(W6 AUDIO)
AU-63H/63/665/760 ONLY
AU-665/760 ONLY
AC HEAD
AU-65H/65/665/760 ONLY
AE CH1
AE CH2
E TC
E CTL
R/P CH1
R/P CH2
R/P TC
CTL
A CONFI CH1
A CONFI CH2
AU-665 / 760 ONLY
AU-665
AU-760
ONLY
FE HEAD
FE
DRUM
Y R/P CH1
Y R/P CH2
C R/P CH1
C R/P CH2
RE CH1
RE CH2
AU-62H/62/65H/65
AU-665/760
ONLY
Y AT CH1
Y AT CH2
C AT CH1
C AT CH2
RA & HA & RE
AT HA
AT POWER
CARRIAGE
MECHA INTERFACE
SUPPLY REEL MOTOR
TAKE TP REEL MOTOR
CAPSTAN MOTOR
LOADING MOTOR
CHANGE MOTOR
SMALL REEL UP SW
SMALL REEL DOWN SW
ROLLER LED 1
ROLLER LED 2
LOAD VOLT SW
LOADING END LED
LOADING ST LED
TAPE SENSOR
DEV SENSOR

INTERCONNECTION 3/4

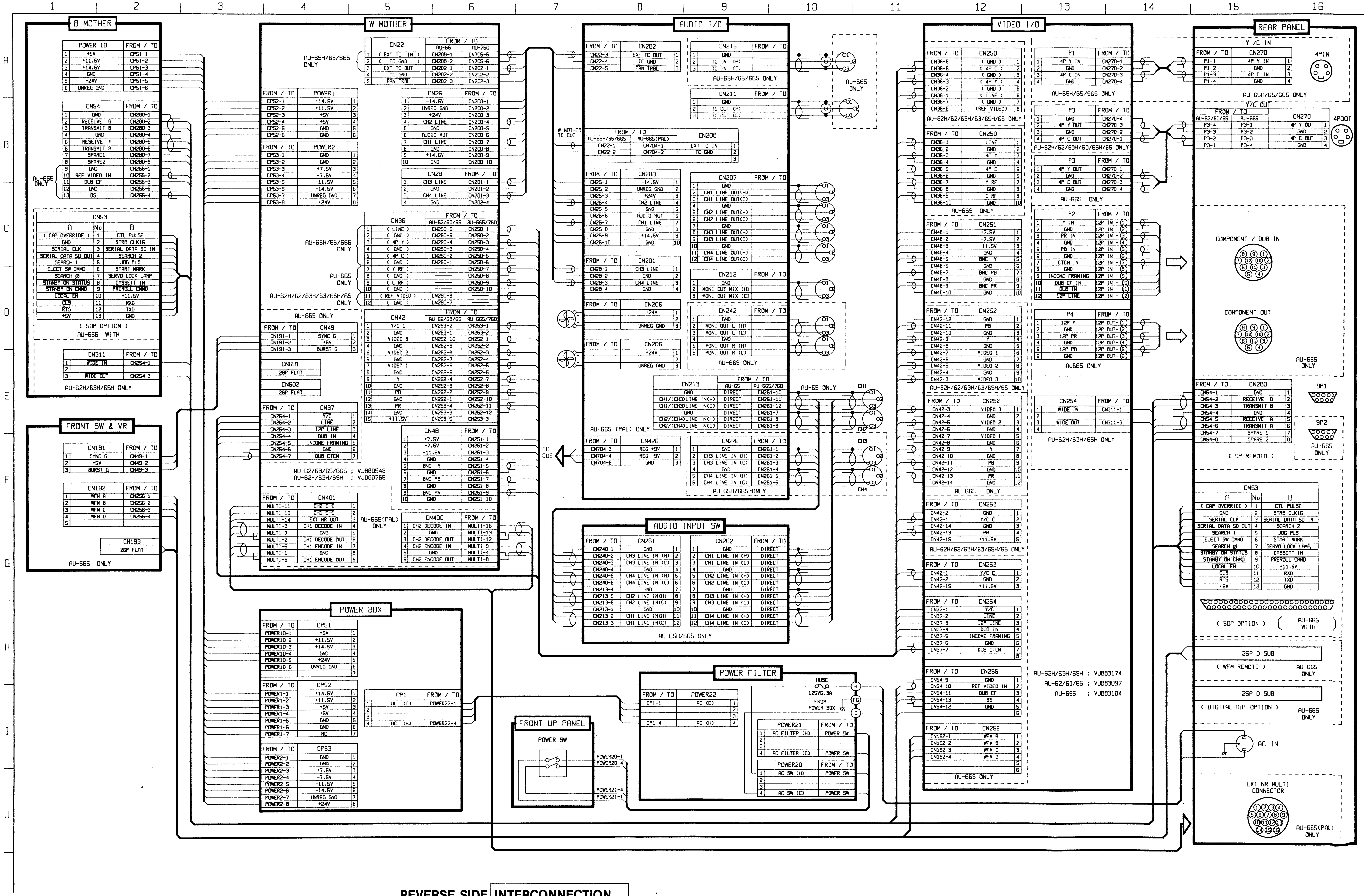
B MOTHER
FRONT SW & VR
W MOTHER
POWER BOX
FRONT UP PANEL
POWER SW
AUDIO I/O
AUDIO INPUT SW
POWER FILTER
VIDEO I/O
REAR PANEL
Y/C IN
4PIN
Y/C OUT
4POOT
COMPONENT / DUB IN
COMPONENT OUT
9P1
9P2
(9P RFMOTO)
(SOP OPTION)
AU-66S WITH
25P D SUB
(WFM REMOTE)
(DIGITAL OUT OPTION)
AC IN
EXT NR MULTI CONNECTOR
AU-66S(PAL) ONLY
AU-66S ONLY
AU-65H/65/665 ONLY
AU-62H/63H/65H ONLY
W MOTHER TC CUE
TC CUE
CH1
CH2
CH3
CH4
AU-62/63/65/665 : VJ880548
AU-62H/63H/65H : VJ880765
AU-62H/63H/65H : VJ883174
AU-62/63/65 : VJ883097
AU-665 : VJ883104
HUSE 125V6.3A
FROM POWER BOX

INTERCONNECTION 4/4

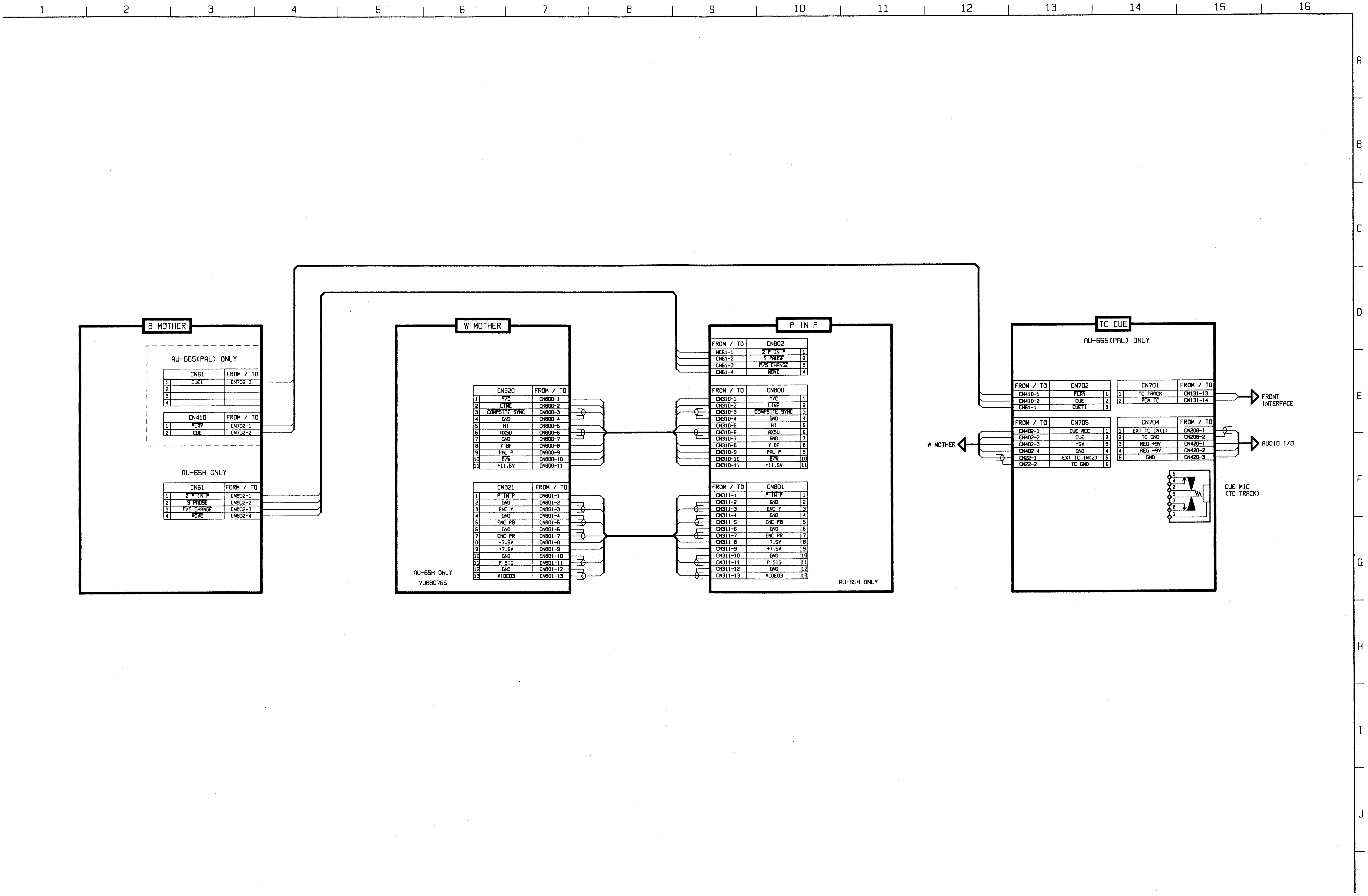

B MOTHER

AU-665(PAL) ONLY

	CN61	FROM / TO
1	CUE1	CN702-3
2		
3		
4		

	CN410	FROM / TO
1	PLAY	CN702-1
2	CUE	CN702-2

AU-65H ONLY

	CN61	FORM / TO
1	2 P IN P	CN802-1
2	S PAUSE	CN802-2
3	P/S CHANGE	CN802-3
4	MOVE	CN802-4

W MOTHER

	CN320	FROM / TO
1	Y/C	CN800-1
2	LINE	CN800-2
3	COMPSITE SYNC	CN800-3
4	GND	CN800-4
5	HI	CN800-5
6	AXSU	CN800-6
7	GND	CN800-7
8	Y BF	CN800-8
9	PAL P	CN800-9
10	B/W	CN800-10
11	+11.5V	CN800-11

	CN321	FROM / TO
1	P IN P	CN801-1
2	GND	CN801-2
3	ENC Y	CN801-3
4	GND	CN801-4
5	ENC PB	CN801-5
6	GND	CN801-6
7	ENC PR	CN801-7
8	-7.5V	CN801-8
9	+7.5V	CN801-9
10	GND	CN801-10
11	P SIG	CN801-11
12	GND	CN801-12
13	VIDEO3	CN801-13

AU-65H ONLY
VJ880765

P IN P

FROM / TO	CN802	
NC61-1	2 P IN P	1
CN61-2	S PAUSE	2
CN61-3	P/S CHANGE	3
CN61-4	MOVE	4

FROM / TO	CN800	
CN310-1	Y/C	1
CN310-2	LINE	2
CN310-3	COMPSITE SYNC	3
CN310-4	GND	4
CN310-5	HI	5
CN310-6	AXSU	6
CN310-7	GND	7
CN310-8	Y BF	8
CN310-9	PAL P	9
CN310-10	B/W	10
CN310-11	+11.5V	11

FROM / TO	CN801	
CN311-1	P IN P	1
CN311-2	GND	2
CN311-3	ENC Y	3
CN311-4	GND	4
CN311-5	ENC PB	5
CN311-6	GND	6
CN311-7	ENC PR	7
CN311-8	-7.5V	8
CN311-9	+7.5V	9
CN311-10	GND	10
CN311-11	P SIG	11
CN311-12	GND	12
CN311-13	VIDEO3	13

AU-65H ONLY

TC CUE

AU-665(PAL) ONLY

FROM / TO	CN702	
CN410-1	PLAY	1
CN410-2	CUE	2
CN61-1	CUET1	3

	CN701	FROM / TO
1	TC TRACK	CN131-13
2	PCM TC	CN131-14

FROM / TO	CN705	
CN402-1	CUE REC	1
CN402-2	CUE	2
CN402-3	+5V	3
CN402-4	GND	4
CN22-1	EXT TC IN(2)	5
CN22-2	TC GND	6

	CN704	FROM / TO
1	EXT TC IN(1)	CN208-1
2	TC GND	CN208-2
3	REG +9V	CN420-1
4	REG -9V	CN420-2
5	GND	CN420-3

TYPE \ MODEL	AU-65H	AU-63H	AU-62H
NTSC	VEP80765A	VEP80765C	VEP80765B
PAL	VEP80765A	VEP80765C	VEP80765B

WO(W,MOTHER) SCHEMATIC DIAGRAM 1/4

W1-F
VJS2898A100

< W1 > TBC & SYNC GEN (FRONT)

FROM / TO				A	NO	B	FROM / TO			
				GND	1	←				
				+5V	2	←				
				+5V	3	←				
				+11.5V	4	←				
				+11.5V	5	←				
W2-F20A				Y BST	6	GND				
				GND	7	C BST	W2-F20B			
CN20-3B				AT MODE	8	Y/C DELAY	CN40-11			
W5-R40A				H CONT 3	9	H CONT 4	W5-R39A			
W5-R42A				H CONT 1	10	H CONT 2	W5-R41A			
W5-F46A	W3-F27A,B			Y HEAD SW	11	SEARCH	CN20-3A			
W2-F12A				SEARCH ON	12	PB FRAMING 2	W5-R35A			
W5-R36A	W3-F19A,B			Y DOP	13	GND				
W5-R38A	W3-F20A,B	W6-F44A		C DOP	14	GND	CN41-6			
CN41-5				TAPE V	15	Y PB SYNC	W5-F49A	CN41-4	W2-F18A	
W2-F17A				Y CP	16	C PB SYNC	W5-F49B	W2-F18B		
W2-F17B	W3-F17A,B			C CP	17	AGC CP	W3-F16A,B			
CN20-9A	W2-F15A	W3-F14A,B	CN602-1A	C OFF	18	VIDEO IN	W3-R29A,B	W4-R38B	CN20-16A	W6-F32A
CN20-5A				EJECT TAPE	19	E E	W2-F15B	W3-F15A,B	W5-R27B	W6-F46B
				Y SH	20	ADV CONT	CN20-6B			
					21					
W2-F22A				GND	22	←	W2-F22B			
W2-F23A				C DATA 7	23	C DATA 8	W2-F23B			
W2-F24A				C DATA 5	24	C DATA 6	W2-F24B			
W2-F25A				C DATA 3	25	C DATA 4	W2-F25B			
W2-F26A				C DATA 1	26	C DATA 2	W2-F26B			
W2-F27A				C WCK	27	GND	W2-F27B			
W2-F28A				GND	28	←	W2-F28B			
W2-F29A				Y DATA 8	29	Y DATA 9	W2-F29B			
W2-F30A				Y DATA 6	30	Y DATA 7	W2-F30B			
W2-F31A				Y DATA 4	31	Y DATA 5	W2-F31B			
W2-F32A				Y DATA 2	32	Y DATA 3	W2-F32B			
W2-F33A				Y WCK	33	Y DATA 1	W2-F33B			
W2-F34A				GND	34	←	W2-F34B			
CN601-13B				Y 8	35	Y 9	—			
CN601-12B				Y 6	36	Y 7	CN601-13A			
CN601-11B				Y 4	37	Y 5	CN601-12A			
CN601-10B				Y 2	38	Y 3	CN601-11A			
CN602-2B				Y RCLK	39	Y 1	CN601-10A			
				GND	40	←	CN601-9B			
CN601-8B				PR 7	41	PR 8	CN601-9A			
CN601-7B				PR 5	42	PR 6	CN601-8A			
CN601-6B				PR 3	43	PR 4	CN601-7A			
CN601-5B				PR 1	44	PR 2	CN601-6A			
				GND	45	GND				
CN601-4B				PB 7	46	PB 8	CN601-5A			
CN601-3B				PB 5	47	PB 6	CN601-4A			
CN601-2B				PB 3	48	PB 4	CN601-3A			
CN601-1B				PB 1	49	PB 2	CN601-2A			
				GND	50	←	CN601-1A			

W2-F
VJS2898A100

< W2 > ENCODER (FRONT)

FROM / TO				A	NO	B	FROM / TO			
				GND	1	←				
				+5V	2	←				
				+5V	3	←				
				+11.5V	4	←				
				+11.5V	5	←				
				GND	6	←				
CN500-1	W3-F7A,B			Y PB 1	7	GND				
CN500-2				GND	8	←				
CN500-3	W3-F10A,B			C PB	9	GND				
CN500-4				GND	10	←				
					11					
W1-F12A				SEARCH ON	12	HI SPEED	W3-F12A,B	CN20-15A		
CN20-13B				PHASE INH	13	TAPE FWD	W3-F13A,B	CN20-20A		
CN20-13A				V PHASE CF	14	SERVO LOCK	CN20-19B			
CN20-9A	W1-F18A	W3-F14A,B	CN602-1A	C OFF	15	E E	W5-R27B	W1-F19B	W3-F15A,B	W6-F46B
				GND	16	←				
W1-F16A				Y CP	17	C CP	W1-F17A	W3-F17A,B		
W1-F15B	W5-F49A	CN41-4		Y PB SYNC	18	C PB SYNC	W1-F16B	W5-F49B		
					19					
W1-F6A				Y BST	20	C BST	W1-F7B			
					21					
W1-F22A				GND	22	←	W1-F22B			
W1-F23A				C DATA 7	23	C DATA 8	W1-F23B			
W1-F24A				C DATA 5	24	C DATA 6	W1-F24B			
W1-F25A				C DATA 3	25	C DATA 4	W1-F25B			
W1-F26A				C DATA 1	26	C DATA 2	W1-F26B			
W1-F27A				C WCK	27	GND	W1-F27B			
W1-F28A				GND	28	←	W1-F28B			
W1-F29A				Y DATA 8	29	Y DATA 9	W1-F29B			
W1-F30A				Y DATA 6	30	Y DATA 7	W1-F30B			
W1-F31A				Y DATA 4	31	Y DATA 5	W1-F31B			
W1-F32A				Y DATA 2	32	Y DATA 3	W1-F32B			
W1-F33A				Y WCK	33	Y DATA 1	W1-F33B			
W1-F34A				GND	34	←	W1-F34B			
					35					
					36					
					37					
					38					
					39					
				GND	40	←				
					41					
					42					
					43					
					44					
W1-R7A				R4SC	45	GND				
					46					
					47					
					48					
					49					
				GND	50	←				

W3-F
VJS2898A100

< W3 > MOD & DEMOD (FRONT)

FROM / TO				A	NO	B	FROM / TO			
				GND	1	←				
				+5V	2	←				
				+5V	3	←				
				+11.5V	4	←				
				+11.5V	5	←				
				GND	6	←				
W2-F7A	CN500-1			Y PB 1	7	DUB Y OUT	(DUB OUT 10PIN 1) (AU-662)			
CN30-15				Y PB 2	8	←				
CN30-14	CN500-2			GND	9	←	(DUB OUT 10PIN 2) (AU-662)			
W2-F9A	CN500-3			C PB	10	DUB C OUT	(DUB OUT 10PIN 5) (AU-662)			
CN500-4				GND	11	←	(DUB OUT 10PIN 6) (AU-662)			
CN20-15A	W2-F12B			HI SPEED	12	←				
CN20-20A	W2-F13B			TAPE FWD	13	←				
CN20-9A	W2-F15A	W1-F18A	CN602-1A	C OFF	14	←				
W1-F19B	W2-F15B	W5-R27B	W6-F46B	E E	15	←				
W1-F17B				AGC CP	16	←				
W1-F17A	W2-F17B			C CP	17	←				
				GND	18	←				
W5-R36A	W1-F13A			Y DOP	19	←				
W5-R38A	W1-F14A	W6-F44A		C DOP	20	←				
				GND	21	←	(DUB OUT 10PIN 4) (AU-662)			
CN20-15B				LOW RF	22	←				
				Y DOP OUT	23	←	(DUB OUT 10PIN 3) (AU-662)			
				C DOP OUT	24	←	(DUB OUT 10PIN 7) (AU-662)			
				→	25	R/P HEAD	W1-R33B	W5-R42B	CN20-31B	
				→	26	GND	(DUB OUT 10PIN 8) (AU-662)			
				→	27	Y HEAD SW	W1-F11A	W5-F46A		
				→	28	Y AT HSW	W5-F46B			
				→	29	Y R/P HSW	W5-F47A			
				→	30	GND				
				→	31	C HEAD SW	W5-F47B	W6-F47B		
				→	32	C AT HSW	W5-F48A			
				→	33	C R/P HSW	W5-F48B			
				→	34	GND				
					35					
				→	36	Y RF	CN36-7			
				→	37	GND	CN36-8			
				→	38	EE WIDE /(PCM DET)	CN20-14A	W4-R40B		
				→	39	GND				
				→	40	Y R/P PB SYNC	W5-F44B			
				→	41	Y R/P RF DET	W5-F45B			
				GND	42	GND				
				GND	43	(C PCM AT RF)	CN304-1			
				GND	44	(GND)	CN304-2			
				GND	45	C AT RF	W5-F44A			
				GND	46	GND	W5-F45A			
				GND	47	C RF	CN36-9	W6-F44B		
				GND	48	GND	CN36-10			
				GND	49	(Y PCM AT RF)	CN304-3			
				GND	50	(GND)	CN304-4			

W1-R
VJS2898A100

< W1 > TBC & SYCN GEN (REAR)

FROM / TO				A	NO	B	FROM / TO			
				GND	1	←				
				+7.5V	2	←				
				-7.5V	3	←				
				-11.5V	4	←				
				-11.5V	5	←				
W2-R6A				RSC	6	GND				
W2-F45A				R4SC	7	GND				
W2-R8A				LAG LP	8	Y DOP 2	W2-R8B			
CN40-3	W2-R9A			VIDEO G	9	LEAD LP	W2-R9B			
CN40-5	W2-R10A			C G	10	FRM ON	CN20-9B			
CN40-14				PR GAIN	11	PB GAIN	CN40-13			
				INRCK 2	12					
					13					
W3-R21A,B				INCOME FH	14	COMP SYNC	W4-R27A	W3-R28A,B	CN30-12	CN320-3
W4-R36A				LINE CF	15	COMPNT CF	W4-R36B			
CN41-7				T/C CF	16	REF CF	W2-R12B	W5-R15A	CN602-6A	
				(EXT CF)	17	(DUB CF)	CN41-13			
CN304-5		(DUB FRAMING SUB P-3)		(HD)	18	(INCOME FRAMING)	CN37-5			
CN304-6			(AU-662)	GND	19	GND	CN41-9			
W5-R15B				FRAMING	20					
CN20-1A	CN602-3A	(DUB FRAMING SUB P-4)		R FRAMING	21	PAL SW	W2-R12A			
CN41-2				R VP	22	RST	W2-R13B			
W2-R13A				R BLK	23	R SYNC	W2-R14B	CN41-1		
W2-R14A				R BF	24	R HD	CN41-8	CN602-2A		
				GND	25	←	CN41-9	CN601-25AB		
				(5 SER)	26	TAPE WIDE /(DUB CF ON)	CN20-8A			
CN20-11B				REF DET	27	REF SCH	CN20-10A			
W2-R19A				VSC CONT	28	STD	W4-R35B	CN20-12A		
W2-R18A	CN20-10B			V PHASE 1	29	V PHASE 2	W2-R18B			
CN20-7A				CF SELECT 2	30	CF SELECT 3	CN20-7B			
CN20-8B				CF SELECT 1	31	LINE	W4-F21A,B	CN20-12B	CN37-2	
CN20-5B				INT	32	FREEZE /(DUB)	CN20-11A	W4-R38A		
CN20-6A				EXT	33	R/P HEAD	CN20-31B	W5-R42B	W3-F25A,B	
CN20-4B				ADV 2	34	TAPE R/P	CN20-4A			
CN20-2A				ADV 1	35	SYS H PHASE	CN40-7			
CN40-8				SYS SC PHASE	36	SYS SC COARSE 2	CN40-10			
				(SCH COARSE 2)	37	SYS SC COARSE 1	CN40-9			
				(SCH COARSE 1)	38	SCH PHASE	CN40-12			
W2-R39A				D/A PR	39	GND				
				GND	40	D/A PB	W2-R41A			
				GND	41	←				
W2-R43A				D/A Y	42	GND				
				GND	43	←				
					44	GND	CN36-12	CN41-15		
				GND	45	REF VIDEO	CN36-11	CN41-14		
				+11.5V	46	←				
				+11.5V	47	←				
				+5V	48	←				
				+5V	49	←				
				GND	50	←				

W2-R
VJS2898A100

< W2 > ENCODER (REAR)

FROM / TO				A	NO	B	FROM / TO			
				GND	1	←				
				+7.5V	2	←				
				-7.5V	3	←				
				-11.5V	4	←				
				-11.5V	5	←				
W1-R6A				RSC	6	GND				
				GND	7	←				
W1-R8A				LAG LP	8	Y DOP 2	W1-R8B			
CN40-3	W1-R9A			VIDEO G	9	LEAD LP	W1-R9B			
CN40-5	W1-R10A			C G	10					
CN49-1				SYNC G	11	BURST G	CN49-3			
W1-R21B				PAL SW	12	REF CF	W1-R16B	W5-R15A	CN602-6A	
W1-R23A				R BLK	13	RST	W1-R22B			
W1-R24A				R BF	14	R SYNC	W1-R23B	CN41-1		
CN602-1B				ID OFF	15	CHARACTOR GATE	CN41-11			
CN41-10				CHARACTOR	16	GND	CN41-12			
CN41-12				GND	17	←				
W1-R29A	CN20-10B			V PHASE 1	18	V PHASE 2	W1-R29B			
W1-R28A				VSC CONT	19					
CN40-6				HUE	20	SET UP	CN40-4			
					21					
					22					
CN42-1				Y/C C	23	GND				
CN42-2				GND	24	GND				
(CN42-3)	CN321-11			P SIG/(VIDEO3)	25	GND				
(CN42-4)	CN321-10			GND	26	GND				
CN42-5				VIDEO 2	27	GND				
CN42-6				GND	28	GND				
CN42-7				VIDEO 1	29	GND				
CN42-8				GND	30	GND				
CN42-9				Y	31	GND				
CN42-10				GND	32	GND				
CN42-11				PB	33	GND				
CN42-12				GND	34	GND				
CN42-13				PR	35	GND				
CN42-14				GND	36	GND				
				GND	37	GND				
				GND	38	GND				
W1-R39A				D/A PR	39	GND				
				GND	40	GND				
W1-R40B				D/A PB	41	GND				
				GND	42	GND				
W1-R42A				D/A Y	43	GND				
				GND	44	GND				
				GND	45	GND				
CN42-15				+11.5V	46	←				
				+11.5V	47	←				
				+5V	48	←				
				+5V	49	←				
				GND	50	←				

W3-R
VJS2898A100

< W3 > MOD & DEMOD (REAR)

FROM / TO				A	NO	B	FROM / TO			
				GND	1	←				
				+7.5V	2	←				
				-7.5V	3	←				
				-11.5V	4	←				
				-11.5V	5	←				
				GND	6	←				
CN39-3				Y R/P CH1 RF	7	←				
CN39-6				Y R/P CH2 RF	8	←				
CN39-4,5				GND	9	←				
(CN302-1)				(Y AT CH1 RF)	10	←				
(CN302-4)				(Y AT CH2 RF)	11	←				
(CN302-2,3)				(GND)	12	←				
CN39-9				C R/P CH1 RF	13	←				
CN39-12				C R/P CH2 RF	14	←				
CN39-10,11				GND	15	←				
(CN302-8)				(C AT CH1 RF)	16	←				
(CN302-11)				(C AT CH2 RF)	17	←				
(CN302-9)	(CN302-10)			(GND)	18	←				
					19					
					20					
W1-R14A				INCOME FH	21	←				
				GND	22	←				
W4-R23A				Y	23	←				
CN30-8				GND	24	←				
CN30-9				REC VITC	25	←				
CN30-10				VIGE	26	←				
CN30-11				GND	27	←				
CN30-12	W1-R14B	W4-R27A	CN310-3	COMP SYNC	28	←				
CN20-16A	W1-F18B	W4-R38B	W6-F32A	VIDEO IN	29	←				
CN24-2				METER	30	←				
W5-R27A				MOD	31	←				
				GND	32	←				
CN39-1				Y FM	33	←				
CN39-2				GND	34	←				
CN39-8				GND	35	←				
CN39-7				C FM	36	←				
				GND	37	←				
W6-F42B				FM AUDIO	38	←				
				GND	39	←				
					40					
				GND	41	←				
W4-F37B				C CLAMP	42	←				
				GND	43	←				
W4-R44A				CTCM	44	←				
				GND	45	←				
				+11.5V	46	←				
				+11.5V	47	←				
				+5V	48	←				
				+5V	49	←				
				GND	50	←				

W0(W,MOTHER) SCHEMATIC DIAGRAM 2/4

16 1 2 3 4 5 6 7 8 9 10 11 12 13 14 15 16

W4-F
VJS2898A100 (AU-65/665/662 ONLY)

< W4 > DEC & CTCM (FRONT)

FROM / TO				A	NO	B	FROM / TO			
				GND	1	←				
				+5V	2	←				
				+5V	3	←				
				+11.5V	4	←				
				+11.5V	5	←				
				GND	6	←				
				GND	7	←				
				GND	8	←				
				GND	9	←				
				GND	10	←				
					11					
CN36-2				GND	12	GND				
CN36-1				LINE	13	GND				
				LINE	14	GND				
					15					
					16					
					17					
				GND	18	←				
CN24-1				LEVEL CONT	19	←				
CN20-16B				VISC ON	20	←				
CN20-12B	(CN37-2)	W1-R31B	CN320-2	LINE	21	←				
CN20-17B	(CN37-1)		CN320-1	Y/C	22	←				
				GND	23	←				
					24					
					25					
					26					
					27					
					28					
					29					
					30					
					31					
					32					
					33					
					34					
					35					
					36					
				GND	37	GND				
CN36-3				4P Y	38	GND				
CN36-4				GND	39	GND				
CN36-5				4P C	40	GND				
CN36-6				GND	41	GND				
				GND	42	GND				
				GND	43	GND				
				GND	44	GND				
				GND	45	GND				
				GND	46	GND				
				GND	47	GND				
				GND	48	GND				
				GND	49	GND				
				GND	50	GND				

W5-F
VJS2898A100

< W5 > SERVO & DRIVE & AT (FRONT)

FROM / TO				A	NO	B	FROM / TO			
				GND	1	←				
				+5V	2	←				
				+5V	3	←				
				+11.5V	4	←				
				+11.5V	5	←				
CN15-2				S TENSION	6	T TENSION	CN15-3			
CN15-1				TENSION VCC	7	TENSION GND	CN15-4			
				UNREG GND	8	←				
CN15-5				S M1	9	←				
CN15-6				S H1-	10	S H1+	CN15-7			
CN15-8				S M2	11	←				
CN15-9				S VH+	12	←				
CN15-10				S H2-	13	S H2+	CN15-11			
CN15-12				S M3	14	←				
CN15-14				S VH-	15	←				
CN15-13				S H3-	16	S H3+	CN15-15			
CN14-1				T M1	17	←				
CN14-2				T H1-	18	T H1+	CN14-3			
CN14-4				T M2	19	←				
CN14-5				T VH+	20	←				
CN14-6				T H2-	21	T H2+	CN14-7			
CN14-8				T M3	22	←				
CN14-10				T VH-	23	←				
CN14-9				T H3-	24	T H3+	CN14-11			
				UNREG GND	25	←				
CN13-1				C M2	26	←				
CN13-2				C H2-	27	C H1+	CN13-3			
CN13-5				C M3	28	←				
CN13-4				C H2+	29	C H3-	CN13-6			
CN13-7				C VH-	30	←				
CN13-9				C VH+	31	←				
CN13-8				C H3+	32	C H1-	CN13-11			
CN13-10				C M1	33	←				
				UNREG GND	34	←				
CN12-1				D H1+	35	D H1-	CN12-2			
CN12-3				D H2+	36	D H2-	CN12-4			
CN12-5				D H3-	37	D H3+	CN12-6			
CN12-7				D M2	38	←				
CN12-8				D M1	39	←				
CN12-9				D M3	40	←				
CN12-10				D VH-	41	←				
CN12-11				D VH+	42	←				
				UNREG GND	43	←				
W3-F45B				C AT RF	44	Y R/P PB SYNC	W3-F40A,B			
W3-F46B				GND	45	Y R/P RF DET	W3-F41A,B			
W3-F27A,B	W1-F11A			Y HEAD SW	46	Y AT HSW	W3-F28A,B			
W3-F29A,B				Y R/P HSW	47	C HEAD SW	W3-F31A,B	W6-F47B		
W3-F32A,B				C AT HSW	48	C R/P HSW	W3-F33A,B			
W1-F15B	CN41-4	W2-F18A		Y PB SYNC	49	C PB SYNC	W1-F16B	W2-F18B		
				GND	50	←				

W6-F
VJS2898A100

< W6 > AUDIO (FRONT)

FROM / TO				A	NO	B	FROM / TO			
CN402-4				GND	1	←				
CN402-3				+5V	2	←				
				+5V	3	←				
				+11.5V	4	←				
				+11.5V	5	←				
CN20-32A				TCG/TCR ON	6	TC DETECT	CN20-23B			
CN402-1				CUE REC	7	CUE	CN402-2			
CN21-3				TCR PB	8	TCR EXT	CN21-1			
CN21-2,5				TC GND	9	TCG/TCR	CN21-4			
CN22-3				EXT TC OUT	10	EXT TC IN	CN22-1			
CN22-4				TC GND	11	TC GND	CN22-2			
				GND	12	GND				
					13	TC EE	CN21-6			
					14					
					15					
					16					
					17					
					18					
					19					
					20					
					21					
					22					
					23					
					24					
					25					
					26					
					27					
					28					
					29					
		(B1 CN410-2)	(JAMPER)	TAPE N FMT	30	SEARCH	(W6-R13B)	(JAPER)		
				GND	31	GND				
W1-F18B	W3-R29A,B	W4-R38B	CN20-16A	FM MUT	32					
				GND	33	GND				
CN26-2,5				GND	34	CH3 REC VR ⊖	CN26-1			
CN26-4				CH3 PB VR ⊕	35	CH3 PB VR ⊖	CN26-3			
CN26-12	CN28-2			GND	36	CH3 LINE	CN26-11	CN28-1		
				GND	37	GND				
CN26-7,10				GND	38	CH4 REC VR ⊖	CN26-6			
CN26-9				CH4 PB VR ⊕	39	CH4 PB VR ⊖	CN26-8			
CN26-14	CN28-4			GND	40	CH4 LINE	CN26-13	CN28-3		
				GND	41	GND				
				GND	42	FM AUDIO	W3-R38A,B			
				GND	43	GND				
W1-F14A	W3-F20A,B	W5-R38A		C DOP	44	C RF	W3-F47B	CN36-9		
				GND	45	GND				
W5-R19B	CN31-7			REC RELAY	46	E E	W1-F19B	W2-F15B	W3-F15A,B	W5-R27B
				GND	47	C HEAD SW	W5-F47B	W3-F31A,B		
W5-R9B	CN20-29B	CN46-4		SERIAL CLK	48	SERIAL DATA AUD/FM ATT	CN20-26B			
W5-R10B	CN20-28A	CN46-5		STRB CLK 16	49					
				GND	50	←				

W4-R
VJS2898A100 (AU-65/665/662 ONLY)

< W4 > DEC & CTCM (REAR)

FROM / TO				A	NO	B	FROM / TO			
				GND	1	←				
CN48-1	CN321-9			+7.5V	2	←				
CN48-2	CN321-8			-7.5V	3	←				
CN48-3				-11.5V	4	←				
				-11.5V	5	←				
CN48-4				GND	6	GND				
CN48-5				BNC Y	7	GND				
CN48-6				GND	8	GND				
CN48-7				BNC PB	9	GND				
CN48-8				GND	10	GND				
CN48-9				BNC PR	11	GND				
CN48-10				GND	12	GND				
					13	GND				
CN321-2				GND	14	GND				
CN321-3				ENC Y	15	GND				
CN321-4				GND	16	GND				
CN321-5				ENC PB	17	GND				
CN321-6				GND	18	GND				
CN321-7				ENC PR	19	GND				
					20					
					21	GND				
				GND	22	GND				
W3-R23A,B				Y	23	GND				
				GND	24	GND				
					25	GND				
					26	GND				
CN30-12	W1-R14B	W3-R28A,B	CN320-3	COMP SYNC	27	GND				
CN30-11	CN320-4			GND	28	GND				
W5-R25A				(DUB Y DOP)	29	GND				
W5-R26A				(DUB C DOP)	30	GND	CN320-7			
CN320-5				HI	31	AXSU	CN320-6			
CN320-8				Y BF	32	PALP	CN320-9			
CN30-11				GND	33	GND				
CN20-18A				IN SCH	34	N-STD AUTO	CN20-17A			
CN20-18B	W6-R13A			CPNT CF ON	35	STD	CN20-12A	W1-R28B		
W1-R15A				LINE CF	36	COMPNT CF	W1-R15B			
CN30-13				VP REC	37	C CLAMP	W3-R42A,B			
CN20-11A	W1-R32B			FREEZE / (DUB)	38	VIDEO IN	W3-R29A,B	CN20-16A	W1-F18B	W6-F32A
CN320-10				B/W	39					
					40	EE WIDE / (PCM DET)	W3-F38AB	CN20-14A		
				GND	41	GND				
(CN37-7)				(DUB CTCM)	42	GND				
(CN37-6)				GND	43	GND				
W3-R44A,B				CTCM	44	GND				
				GND	45	GND				
(CN302-5)				+14.5V	46	←				
(CN302-6)	CN320-11			+11.5V	47	←				
				+5V	48	←				
				+5V	49	←				
(CN302-7)				GND	50	←				

W5-R
VJS2898A100

< W5 > SERVO & DRIVE & AT (REAR)

FROM / TO				A	NO	B	FROM / TO			
CN30-2	CN31-4			GND	1	←	CN30-4			
CN31-3	CN30-5			+7.5V	2	←				
CN31-6	CN30-6	CN46-2		-7.5V	3	←				
CN35-8				-11.5V	4	←				
CN31-5	CN40-2			-14.5V	5	←				
CN35-10,11				UNREG GND	6	←				
CN20-30A				S FRAMING	7	+24V				
CN30-1				CAP MAIN CLK	8	CAP OSC	CN30-3			
CN20-27A				SERIAL DATA CAP	9	SERIAL CLK	CN20-29B	W6-F48A	CN46-4	
CN20-25A				SERIAL DATA REL	10	STRB CLK 16	CN20-28A	W6-F49A	CN46-5	
CN20-26A				SERIAL DATA DRM	11	STRB CLK 8	CN20-28B			
CN20-24A				SERIAL DATA TIM	12	SERIAL DATA SRV	CN20-27B			
CN600-3				S REEL PULSE 1	13	T REEL PULSE 1	CN600-1			
CN30-7				TR FG 1	14	TR FG 2	CN20-21B			
W1-R16B	W2-R12B	CN602-6A		REF CF	15	FRAMING	W1-R20A			
CN20-30B				FRAMING /2	16	FRAMING /4	CN20-29A			
CN24-4				TRACKING +	17	CAP FWD	CN20-23A			
CN24-3				TRACKING -	18	CTL PULSE	CN20-31A			
CN31-8	CN20-24B			RE START	19	REC RELAY	CN31-7	W6-F46A		
CN31-9				RE CH1 SW	20	RE CH2 SW	CN31-10			
CN31-12				Y CH1 REC SW	21	C CH1 REC SW	CN31-14			
CN31-13				Y CH2 REC SW	22	C CH2 REC SW	CN31-15			
CN300-1				(Y CH1 PCM GATE)	23	(C CH1 PCM GATE)	CN300-4			
CN300-2				(Y CH2 PCM GATE)	24	(C CH2 PCM GATE)	CN300-5			
W4-29A				(DUB Y DOP)	25	(PCM HSW)	CN301-1			
W4-30A				(DUB C DOP)	26	(PCM GATE)	CN301-2			
W3-R31A,B				MOD	27	E E	W6-F46B	W2-F15B	W1-F19B	W3-F15A,B
CN600-3				CAP OVERRIDE	28	DRUM FG	CN17-1			
CN300-3,6	CN301-3			GND	29	GND	CN17-2			
CN17-5				CAP V FG +	30	DRUM PG +	CN17-3			
CN17-6				CAP FG 1	31	DRUM PG -	CN17-4			
CN17-7				GND	32	CTL GND	CN8-2			
CN17-8				CAP FG 2	33	CTL HEAD	CN8-1			
				GND	34	CTL GND	CN8-2			
W1-F12B				PB FRAMING 2	35	(STILL POS F)	CN34-1			
W1-F13A	W3-F19A,B			Y DOP	36	(STILL POS R)	CN34-2			
				GND	37	(AT AK)	CN34-3			
W1-F14A	W3-F20A,B	W6-F44A		C DOP	38	PINCH ON	CN20-32B			
W1-F9B				H CONT 4	39	(AT ON)	CN34-4			
W1-F9A				H CONT 3	40	(NORMAL)	CN34-5			
W1-F10B				H CONT 2	41	(AT EJECT)	CN34-6			
W1-F10A				H CONT 1	42	R/P HAED	W1-R33B	W3-F25A,B	CN20-31B	
CN35-1				(HV MONI)	43	(HV ON)	CN35-2			
CN35-3				(AT PATTERN A)	44	(AT PATTERN B)	CN35-5			
CN35-4				GND	45	←	CN35-6			
CN31-1	CN35-7	CN40-1		+14.5V	46	←				
CN31-2	CN35-9			+11.5V	47	←				
				+5V	48	←				
				+5V	49	←				
				GND	50	←				

W6-R
VJS2898A100

< W6 > AUDIO (REAR)

FROM / TO				A	NO	B	FROM / TO			
				GND	1	←				
				+7.5V	2	←				
				-7.5V	3	←				
				-11.5V	4	←				
CN25-1				-14.5V	5	←				
CN25-2				UNREG GND	6	←				
CN25-3				+24V	7	←				
				GND	8	GND				
CN9-1				F/E HEAD ⊕	9	F/E HEAD ⊖	CN9-2			
CN9-3				F/E HEAD GND	10	←				
				GND	11	GND				
CN20-19A	CN37-4			HI SPEED ATT 1	12	DOLBY SW	CN46-8			
CN20-18B	W4-R35A			HI SPEED ATT 2	13	PINP /LOADING MUT	CN20-22B	CN321-1		
				GND	14	GND				
					15					
					16					
					17					
					18					
					19					
					20					
					21					
					22					
					23					
					24					
					25					
					26					
					27					
				GND	28	GND				
CN400-2				GND	29	CH2 DECODE IN	CN400-1			
				GND	30	CH2 DECODE OUT	CN400-3			
CN400-5				GND	31	CH2 ENCODE IN	CN400-4			
				GND	32	CH2 ENCODE OUT	CN400-6			
CN24-6,9				GND	33	CH2 REC VR ⊖	CN24-5			
CN24-8				CH2 PB VR ⊕	34	CH2 PB VR ⊖	CN24-7			
CN23-2	CN25-5			GND	35	CH2 LINE	CN25-4	CN23-1		
CN23-3	CN25-6			AUDIO MUT	36	CH2 E-E	CN401-1			
CN401-3				EXT NR OUT	37	CH1 E-E	CN401-2			
CN46-12				EXT NR ON	38	CH1 DECODE IN	CN401-4			
CN401-5				GND	39	CH1 DECODE OUT	CN401-6			
CN401-8				GND	40	CH1 ENCODE IN	CN401-7			
				GND	41	CH1 ENCODE OUT	CN401-9			
CN24-11,14				GND	42	CH1 REC VR ⊖	CN24-10			
CN24-13				CH1 PB VR ⊕	43	CH1 PB VR ⊖	CN24-12			
CN23-5	CN25-8			GND	44	CH1 LINE	CN25-7	CN23-4		
				GND	45	←				
CN303-1	CN25-9			+14.5V	46	←	CN25-9			
CN303-2				+11.5V	47	←				
				+5V	48	←				
				+5V	49	←				
CN303-3				GND	50	←	CN25-10			

A B C D E F G H I J

W,MOTHER
SCHEMATIC DIAGRAM

TYPE \ MODEL	AU-65H	AU-63H	AU-62H
NTSC	VEP80765A	VEP80765C	VEP80765B
PAL	VEP80765A	VEP80765C	VEP80765B

WO(W,MOTHER) SCHEMATIC DIAGRAM 3/4

FRONT

VJP1232T

	CN23	FROM / TO		
1	CH2 LINE	W6-R35B		
2	GND	W6-R35A		
3	AUDIO MUT	W6-R36A		
4	CH1 LINE	W6-R44B		
5	GND	W6-R44A		

VJP1931T

	CN24	FROM / TO		
1	LEVEL CONT	W4-F19A,B		
2	METER	W3-R30A,B		
3	TRACKING −	W5-R18A		
4	TRACKING +	W5-R17A		
5	(CH2 REC VR ⊖)	W6-R33B		
6	(GND)	W6-R33A		
7	CH2 PB VR ⊖	W6-R34B		
8	CH2 PB VR ⊕	W6-R34A		
9	GND	W6-R33A		
10	(CH1 REC VR ⊖)	W6-R42B		
11	(GND)	W6-R42A		
12	CH1 PB VR ⊖	W6-R43B		
13	CH1 PB VR ⊕	W6-R43A		
14	GND	W6-R42A		

AU-65H
AU-65/665/662/760
ONLY

AU-65H
AU-65/665/662/760
ONLY

VJP1931T

	CN26	FROM / TO		
1	(CH3 REC VR ⊖)	W6-F34B		
2	(GND)	W6-F34A		
3	CH3 PB VR ⊖	W6-F35B		
4	CH3 PB VR ⊕	W6-F35A		
5	GND	W6-F34A		
6	(CH4 REC VR ⊖)	W6-F38B		
7	(GND)	W6-F38A		
8	CH4 PB VR ⊖	W6-F39B		
9	CH4 PB VR ⊕	W6-F39A		
10	GND	W6-F38A		
11	CH3 LINE	W6-F36B	CN28-1	
12	GND	W6-F36A	CN28-2	
13	CH4 LINE	W6-F40B	CN28-3	
14	GND	W6-F40A	CN28-4	

AU-65H
AU-665/662/760
ONLY

AU-65H
AU-665/662/760
ONLY

VJP1929T

	CN40	FROM / TO		
1	+14.5V	W5-R46A		
2	-14.5V	W5-R5A,B		
3	VIDEO G	W1-R9A	W2-R9A	
4	SET UP	W2-R20B		
5	C G	W1-R10A	W2-R10A	
6	HUE	W2-R20A		
7	SYS H PHASE	W1-R35B		
8	SYS SC PHASE	W1-R36A		
9	SYS SC COARSE 1	W1-R37B		
10	SYS SC COARSE 2	W1-R36B		
11	Y/C DELAY	W1-F8B		
12	SCH PHASE	W1-R38B		
13	PB GAIN	W1-R11B		
14	PR GAIN	W1-R11A		

VJP1252T

	CN46	FROM / TO		
1	+5V	W5-F2A,B		
2	-7.5V	W5-R3A,B		
3	SERIAL DATA FRT	CN20-25B		
4	SERIAL CLK	CN20-29B	W5-R9B	W6-F48A
5	STRB CLK 16	CN20-28A	W5-R10B	W6-F49A
6	AUTO OFF LED	CN20-18		
7	EJECT LED	CN20-20B		
8	DOLBY SW	W6-R12B		
9	GND			
10	(12P LINE)	(CN37-3)		
11	(CUE SW)	CN402-5		
12	(EXT NR ON)	W6-R38A	CN132-11	

AU-665/662/760 ONLY

AU-760 ONLY

VJP1243T (AU-665/662 ONLY)

	CN49	FROM / TO		
1	SYNC G	W2-R11A		
2	+5V			
3	BURST G	W2-R11B		

MECHA

VJP1229T

	CN8	FROM / TO		
1	CTL HEAD	W5-R33B		
2	CTL GND	W5-R32B	W5-R34B	

VJP1230T (AU-65H/65/665/662/760 ONLY)

	CN9	FROM / TO		
1	F/E HEAD ⊕	W6-R9A		
2	F/E HEAD ⊖	W6-R9B		
3	F/E HEAD GND	W6-R10A,B		

VJP1511T

	CN12	FROM / TO		
1	D H1+	W5-F35A		
2	D H1-	W5-F35B		
3	D H2+	W5-F36A		
4	D H2-	W5-F36B		
5	D H3-	W5-F37A		
6	D H3+	W5-F37B		
7	D M2	W5-F38A,B		
8	D M1	W5-F39A,B		
9	D M3	W5-F40A,B		
10	D VH-	W5-F41A,B		
11	D VH+	W5-F42A,B		

VJP1511T

	CN13	FROM / TO		
1	C M2	W5-F26A,B		
2	C H2-	W5-F27A		
3	C H1+	W5-F27B		
4	C H2+	W5-F29A		
5	C M3	W5-F28A,B		
6	C H3-	W5-F29B		
7	C VH-	W5-F30A,B		
8	C H3+	W5-F32A		
9	C VH+	W5-F31A,B		
10	C M1	W5-F33A,B		
11	C H1-	W5-F32B		

VJP1511T

	CN14	FROM / TO		
1	T M1	W5-F17A,B		
2	T H1-	W5-F18A		
3	T H1+	W5-F18B		
4	T M2	W5-F19A,B		
5	T VH+	W5-F20A,B		
6	T H2-	W5-F21A		
7	T H2+	W5-F21B		
8	T M3	W5-F22A,B		
9	T H3-	W5-F24A		
10	T VH-	W5-F23A,B		
11	T H3+	W5-F24B		

VJP1932T

	CN15	FROM / TO		
1	TENSION VCC	W5-F7A		
2	S TENSION	W5-F6A		
3	T TENSION	W5-F6B		
4	TENSION GND	W5-F7B		
5	S M1	W5-F9A,B		
6	S H1-	W5-F10A		
7	S H1+	W5-F10B		
8	S M2	W5-F11A,B		
9	S VH+	W5-F12A,B		
10	S H2-	W5-F13A		
11	S H2+	W5-F13B		
12	S M3	W5-F14A,B		
13	S H3-	W5-F16A		
14	S VH-	W5-F15A,B		
15	S H3+	W5-F16B		

VJP1235T

	CN17	FROM / TO		
1	DRUM FG	W5-R28B		
2	GND	W5-R29B		
3	DRUM PG+	W5-R30B		
4	DRUM PG-	W5-R31B		
5	CAP V FG+	W5-R30A		
6	CAP FG 1	W5-R31A		
7	GND	W5-R32A		
8	CAP FG 2	W5-R33A		

REAR

VJP1232T

	CN22	FROM / TO		
1	(EXT TC IN)	W6-F10B		
2	(TC GND)	W6-F11B		
3	EXT TC OUT	W6-F10A		
4	TC GND	W6-F11A		
5	FAN TRBL	CN20-2B		

AU-65H
AU-65/665/662/760
ONLY

VJP1237T

	CN25	FROM / TO		
1	-14.5V	W6-R5A,B		
2	UNREG GND	W6-R6A,B		
3	+24V	W6-R7A,B		
4	CH2 LINE	W6-R35B	CN23-1	
5	GND	W6-R35A	CN23-2	
6	AUDIO MUT	W6-R36A	CN23-3	
7	CH1 LINE	W6-R44B	CN23-4	
8	GND	W6-R44A	CN23-5	
9	+14.5V	W6-R46A,B	CN303-1	
10	GND	W6-R50A,B	CN303-3	

VJP1231T

	CN28	FROM / TO		
1	CH3 LINE	W6-F36B	CN26-11	
2	GND	W6-F36A	CN26-12	
3	CH4 LINE	W6-F40B	CN26-13	
4	GND	W6-F40A	CN26-14	

VJP1239T

	CN36	FROM / TO		
1	(LINE)	W4-F13A		
2	(GND)	W4-F12A		
3	(4P Y)	W4-F38A		
4	(GND)	W4-F39A		
5	(4P C)	W4-F40A		
6	(GND)	W4-F41A		
7	(Y RF)	W3-F36B		
8	(GND)	W3-F37B		
9	(C RF)	W3-F47B	W6-F44B	
10	(GND)	W3-F48B		
11	(REF VIDEO)	W1-R45B	CN41-15	
12	(GND)	W1-R44B	CN41-14	

AU-65H
AU-65/665/662/760
ONLY

AU-665/662/760
ONLY

AU-65H/63H/62H
AU-65/63/62
ONLY

VJP1234T (AU-665/662 ONLY) (VJB80548 ONLY)

	CN37	FROM / TO		
1	Y/C	W4-F22A,B	CN20-17B	
2	LINE	W4-F21A,B	CN20-12B	W1-R31B
3	12P LINE	CN46-10		
4	DUB IN /HI SPEED ATT 1	W6-R12A	CN20-19A	
5	INCOME FRAMING	W1-R18B		
6	GND	W4-R43A		
7	DUB CTCM	W4-R42A		

VJP1932T

	CN42	FROM / TO		
1	Y/C C	W2-R23A		
2	GND	W2-R24A		
3	P SIG/(VIDEO 3)	(W2-R25A)	CN311-11	
4	GND	W2-R26A		
5	VIDEO 2	W2-R27A		
6	GND	W2-R28A		
7	VIDEO 1	W2-R29A		
8	GND	W2-R30A		
9	Y	W2-R31A		
10	GND	W2-R32A		
11	PB	W2-R33A		
12	GND	W2-R34A		
13	PR	W2-R35A		
14	GND	W2-R36A		
15	+11.5V	W2-R46A		

VJP1237T

	CN48	FROM / TO		
1	+7.5V	W4-R2A,B		
2	-7.5V	W4-R3A,B		
3	-11.5V	W4-R4A,B		
4	GND	W4-R6A,B		
5	(BNC Y)	W4-R7A		
6	(GND)	W4-R8A		
7	(BNC PB)	W4-R9A		
8	(GND)	W4-R10A		
9	(BNC PR)	W4-R11A		
10	(GND)	W4-R12A		

AU-65H
AU-65/665/662/760
ONLY

VJP1233T (PAL ONLY)

	CN400	FROM / TO		
1	CH2 DECODE IN	W6-R29B		
2	GND	W6-R29A		
3	CH2 DECODE OUT	W6-R30B		
4	CH2 ENCODE IN	W6-R31B		
5	GND	W6-R31A		
6	CH2 ENCODE OUT	W6-R32B		

VJP1236T (PAL ONLY)

	CN401	FROM / TO		
1	CH2 EE	W6-R36B		
2	CH1 EE	W6-R37B		
3	EXT NR OUT	W6-R37A		
4	CH1 DECODE IN	W6-R38B		
5	GND	W6-R39A		
6	CH1 DECODE OUT	W6-R39B		
7	CH1 ENCODE IN	W6-R40B		
8	GND	W6-R40A		
9	CH1 ENCODE OUT	W6-R41B		

VJP1232T (PAL ONLY)

	CN402	FROM / TO		
1	CUE REC	W6-F7A		
2	CUE	W6-F7B		
3	+5V	W6-F2A,B		
4	GND	W6-F1A,B		
5	CUE SW	CN46-11		

VJP1231T (SPARE)

	CN500	FROM / TO		
1	Y PB 1	W3-F7A,B	W2-F7A	
2	GND	W3-F9A,B	W2-F8A,B	CN30-14
3	C PB	W3-F10A,B	W2-F9A	
4	GND	W3-F11A,B	W2-F10A,B	

PCM

VJP1230T (PCM ONLY)

	CN301	FROM / TO		
1	PCM H SW	W5-R25B		
2	PCM GATE	W5-R26B		
3	GND	W5-R29A		

VJP1230T

	CN303	FROM / TO		
1	+14.5V	W6-R46A,B		
2	+11.5V	W6-R47A,B		
3	GND	W6-R50A,B		

VJP1233T

	CN304	FROM / TO		
1	C PCM AT RF	W3-F43B		
2	GND	W3-F44B		
3	Y PCM AT RF	W3-F49B		
4	GND	W3-F50B		
5	HD	W1-R18A		
6	GND	W1-R19A		

AT H.A

VJP1511T (AU-665/662/760 ONLY)

	CN302	FROM / TO		
1	Y AT CH1 RF	W3-R10A,B		
2	GND	W3-R12A,B		
3	GND	W3-R12A,B		
4	Y AT CH2 RF	W3-R11A,B		
5	+14.5V	W4-W46A,B		
6	+11.5V	W4-R47A,B		
7	GND	W4-R50A,B		
8	C AT CH1 RF	W3-R16A,B		
9	GND	W3-R18A,B		
10	GND	W3-R18A,B		
11	C AT CH2 RF	W3-R17A,B		

(VJB80548 ONLY)

P IN P

VJP3079 (AU-65H ONLY)

	CN320	FROM / TO		
1	Y/C			
2	LINE			
3	COMPOSITE SYNC	W4-R27A		
4	GND	W4-R28A,B		
5	HI	W4-R31A		
6	AXSU	W4-R31B		
7	GND	W4-R30B		
8	Y BF	W4-R32A		
9	PAL P	W4-R32B		
10	B/W	W4-R39A		
11	+11.5V	W4-R47A,B		

VJP3081 (AU-65H ONLY)

	CN321	FROM / TO		
1	PINP	W6-R13B	CN20-22B	
2	GND	W4-R14AB		
3	ENC Y	W4-R15A		
4	GND	W4-R16AB		
5	ENC PB	W4-R17A		
6	GND	W4-R18A,B		
7	ENC PR	W4-W19A		
8	-7.5V	W4-R3A,B		
9	+7.5V	W4-R2A,B		
10	GND	W2-R26A,B		
11	P SIG	W4-R25A		
12	GND	W2-R26A,B		
13	VIDEO 3	CN42-3		

(VJB80765 ONLY)

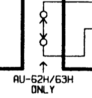

AT POWER

VJP1251T (AU-63H/63/665/662/760 ONLY)

	CN35	FROM / TO		
1	HV MONI	W5-R43A		
2	HV ON	W5-R43B		
3	AT PATTERN A	W5-R44A		
4	GND	W5-R45A		
5	AT PATTERN B	W5-R44B		
6	GND	W5-R45B		
7	+14.5V	W5-R46A		
8	-11.5V	W5-R4A,B		
9	+11.5V	W5-R47A,B		
10	UNREG GND	W5-R6A,B		
11	UNREG GND	W5-R6A,B		

RA.HA.RE

VJP1932T

	CN31	FROM / TO		
1	+14.5V	W5-R46A	CN35-7	
2	+11.5V	W5-R47A	CN35-9	
3	+7.5V	W5-R2A,B	CN30-5	
4	GND	W5-R1A,B	CN30-4	
5	-14.5V	W5-R5A,B		
6	-7.5V	W5-R3A,B	CN30-6	
7	REC RELAY	W5-R19B	W6-F46A	
8	RE START	W5-R19A	CN20-24B	
9	RE CH1 SW	W5-R20A		
10	RE CH2 SW	W5-R20B		
11	GND			
12	Y CH1 REC SW	W5-R21A		
13	Y CH2 REC SW	W5-R22A		
14	C CH1 REC SW	W5-R21B		
15	C CH2 REC SW	W5-R22B		

VJP1239T

	CN39	FROM / TO		
1	Y FM	W3-R33A,B		
2	GND	W3-R34A,B		
3	Y R/P CH1 RF	W3-R7A,B		
4	GND	W3-R9A,B		
5	GND	W3-R9A,B		
6	Y R/P CH2 RF	W3-R8A,B		
7	C FM	W3-R36A,B		
8	GND	W3-R35A,B		
9	C R/P CH1 RF	W3-R13A,B		
10	GND	W3-R15A,B		
11	GND	W3-R15A,B		
12	C R/P CH2 RF	W3-R14A,B		

VJP1233T (PCM ONLY)

	CN300	FROM / TO		
1	Y CH1 PCM GATE	W5-R23A		
2	Y CH2 PCM GATE	W5-R24A		
3	GND	W5-R29A		
4	C CH1 PCM GATE	W5-R23B		
5	C CH2 PCM GATE	W5-R24B		
6	GND	W5-R29A		

POWER BOX

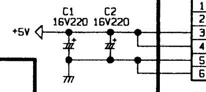

VJP1709

	POWER1	FROM / TO		
1	+14.5V			
2	+11.5V			
3	+5V			
4	+5V			
5	GND			
6	GND			

VJP1627

	POWER2	FROM / TO		
1	GND			
2	GND			
3	+7.5V			
4	-7.5V			
5	-11.5V			
6	-14.5V			
7	UNREG GND			
8	+24V			

REVERSE SIDE **W, MOTHER**
SCHEMATIC DIAGRAM

WO(W,MOTHER) SCHEMATIC DIAGRAM 4/4

B MØTHWER

VJP1232T

CN21		FROM / TO		
1	(TCR EXT)	W6-F8B		
2	(TC GND)	W6-F9A		
3	TCR PB	W6-F8A		
4	TCG/TCR	W6-F9B		
5	TC GND	W6-F9A		
6	TC EE	W6-F13B		

AU-65H
AU-65/665/662/760
ONLY

VJP1932T

CN30		FROM / TO			
1	CAP MAIN CLK	W5-R8A			
2	GND	W5-R1A,B	CN31-4	CN30-4	
3	CAP OSC	W5-R8B			
4	GND	W5-R1A,B	CN31-4	CN30-2	
5	+7.5V	W5-R2A,B			
6	-7.5V	W5-R3A,B			
7	TR FG 1	W5-R14A			
8	(GND)	W5-R24A,B			
9	(REC VITC)	W5-R25A,B			
10	(VIGE)	W5-R26A,B			
11	(GND)	W3-R27A,B	W4-R33A	W4-R28A	CN320-4
12	(COMP SYNC)	W1-R14B	W4-R27A	W3-R28A,B	CN320-3
13	(VP REC)	W4-R37A			
14	GND	W3-F9A,B	CN500-2		
15	Y PB 2	W3-F8A,B			

AU-65H
AU-65/665
AU-662/760
ONLY

VJP1234T (AU-665/662/63 ONLY)

CN34		FROM / TO		
1	STILL POS F	W5-R35B		
2	STILL POS R	W5-R36B		
3	AT AK	W6-R37B		
4	AT ON	W5-R39B		
5	NORMAL	W5-R40B		
6	AT EJECT	W5-R41B		

VJP1932T

CN41		FROM / TO		
1	R SYNC	W2-R14B	W1-R23B	
2	R VP	W1-R22A		
3	GND			
4	Y PB SYNC	W1-F15B	W2-F18A	W5-F49A
5	TAPE V	W1-F15A		
6	GND	W1-F14B		
7	TC CF	W1-F16A		
8	R HD	W1-R24B	CN602-2A	
9	GND	W1-R19B	W1-R25A,B	
10	CHARACTOR	W2-R16A		
11	CHARACTOR GATE	W2-R15B		
12	GND	W2-R17A,B	W2-R16B	
13	(DUB CF)	W1-R17B	CN47-3	
14	(REF VIDEO)	W1-R45B	CN36-11	
15	(GND)	W1-R44B	CN36-12	

AU-665/662/760
ONLY

VJP1230T

CN600		FROM / TO		
1	T REEL PULSE 1	W5-R13B		
2	S REEL PULSE 1	W5-R13A		
3	CAP OVERRIDE	W5-R28A		

VJP2893A064

CN20										
FROM / TO				A	NO	B	FROM / TO			
W1-R21A	CN602-3A			R FRAMING	1	AUTO OFF LED	CN46-6			
W1-R35A				ADV 1	2	FAN TRBL	CN22-5			
W1-F11B				SEARCH	3	AT MODE	W1-F8A			
W1-R34B				TAPE R/P	4	ADV 2	W1-R34A			
W1-F19A				EJECT TAPE	5	INT	W1-R32A			
W1-R33A				EXT	6	ADV CONT	W1-F20B			
W1-R30A				CF SELECT 2	7	CF SELECT 3	W1-R30B			
W1-R26B				TAPE WIDE / (DUB CF ON)	8	CF SELECT 1	W1-R31A			
W1-F18A	W2-F15A	W3-F14A,B		C OFF	9	FRM ON	W1-R10B			
W1-F27B				REF SCH	10	V PHASE 1	W1-R29A	W2-R18A		
W1-R32B	W4-R38A			FREEZE / (DUB)	11	REF DET	W1-R27A			
W1-R28B	W4-R35B			STD	12	LINE	W1-R31B	W4-F21A,B	CN37-2	
W2-F14A				V PHASE CF	13	PHASE INH	W2-F13A			
W3-F38A,B	W4-R40B			EE WIDE / (PCM DET)	14	ID OFF	W2-R15A	CN602-1B		
W3-F12A,B	W2-F12B			HI SPEED	15	LOW RF	W3-F22A,B			
W3-R29A,B	W1-F18B	W4-R38B	W6-F32A	VIDEO IN /FM MUT	16	VISC ON	W4-F20A,B			
W4-R34B				N-STD AUTO	17	Y/C	W4-F22A,B	CN37-1		
W4-R34A				IN SCH	18	CPNT CFON /HI SPEED ATT 2	W4-R35A	W6-R13A		
W6-R12A	CN37-4			DUB IN /HI SPEED ATT 1	19	SERVO LOCK	W2-F14B			
W3-F13A,B	W2-F13B			TAPE FWD	20	EJECT LED	CN46-7			
				-14.5V	21	TR FG 2	W5-R14B			
				-11.5V	22	PINP /LOADING MUT	W6-R13B	CN321-1		
W5-R17B				CAP FWD	23	TC DETECT	W6-F6B			
W5-R12A				SERIAL DATA TIM	24	RE START	W5-R19A	CN31-8		
W5-R10A				SERIAL DATA REL	25	SERIAL DATA FRT	CN46-3			
W5-R11A				SERIAL DATA DRM	26	SERIAL DATA AUD/FM ATT	W6-F48B			
W5-R9A				SERIAL DATA CAP	27	AERIAL DATA SRV	W5-R12B			
W5-R10B	W6-F49A	CN46-5		STRB CLK 16	28	STRB CLK 8	W5-R11B			
W5-R16B				FRAMING /4	29	SERIAL CLK	W5-R9B	W6-F48A	CN46-4	
W5-R7A				S FRAMING	30	FRMING /2	W5-R16A			
W5-R18B				CTL PULSE	31	R/P HEAD	W5-R42B	W1-R33B	W3-F25A,B	
W6-F6A				TCG/TCR ON	32	PINCH ON	W5-R38B			

DIGITAL INTERFACE

(AU-665/760 OPTION)

CN601										
FROM / TO				A	NO	B	FROM / TO			
W1-50B				GND	1	PB 1	W1-F49A			
W1-F49B				PB 2	2	PB 3	W1-F48A			
W1-F48B				PB 4	3	PB 5	W1-F47A			
W1-F47B				PB 6	4	PB 7	W1-F46A			
W1-F46B				PB 8	5	PR 1	W1-F44A			
W1-F44B				PR 2	6	PR 3	W1-F43A			
W1-F43B				PR 4	7	PR 5	W1-F42A			
W1-F42B				PR 6	8	PR 7	W1-F41A			
W1-F41B				PR 8	9	GND	W1-F40A,B			
W1-F39B				Y 1	10	Y 2	W1-F38A			
W1-F38B				Y 3	11	Y 4	W1-F37A			
W1-F37B				Y 5	12	Y 6	W1-F36A			
W1-F36B				Y 7	13	Y 8	W1-F35A			

CN602										
FROM / TO				A	NO	B	FROM / TO			
W1-F18A	W2-F15A	W3-F14A,B	CN20-9A	C OFF	1	ID OFF	W2-R15A	CN20-14B		
W1-R24B	CN41-8			R HD	2	Y RCLK	W1-F39A			
W1-R21A	CN20-1A			R FRAMING	3	-7.5V	POWER2-4			
				+5V	4	←	POWER1-3,4			
				GND	5	←	POWER1-5,6			
W1-R16B	W2-R12B	W5-R15A		REF CF	6	+11.5V	POWER1-2			
					7					

MODEL / TYPE	AU-65H	AU-63H	AU-62H
NTSC	VEP88091A	VEP88091A	VEP88091A
PAL	VEP88091C	VEP88091C	VEP88091C

W1(TBC & SYNC GEN) SCHEMATIC DIAGRAM 1/6

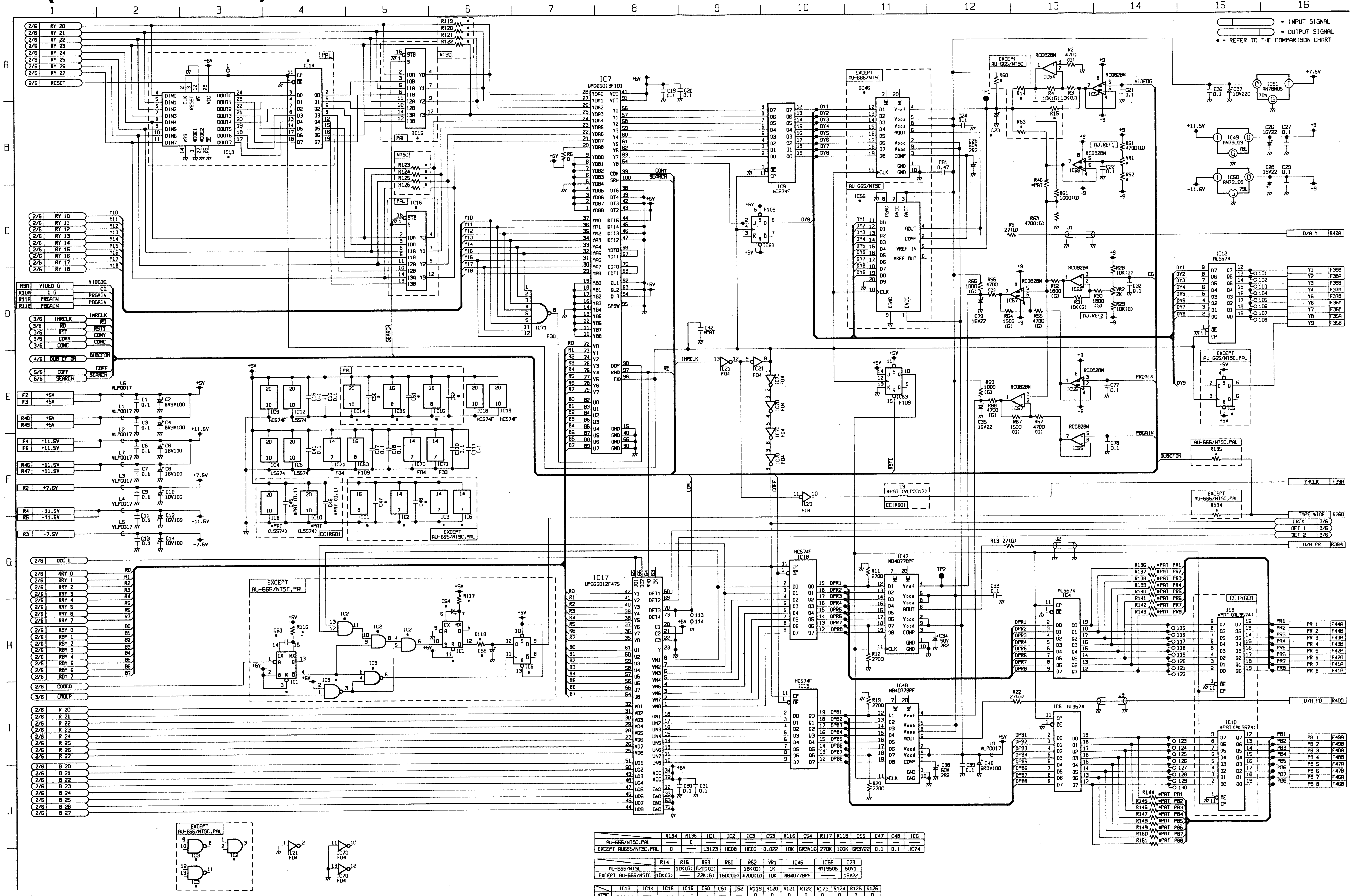

= INPUT SIGNAL
= OUTPUT SIGNAL
* = REFER TO THE COMPARISON CHART
1
2
3
4
5
6
7
8
9
10
11
12
13
14
15
16
A
B
C
D
E
F
G
H
I
J
IC7 UPD6S013F101
IC17 UPD6S012F475
IC13
IC14
IC15
IC16
IC9 HC574F
IC46
IC56
IC12 AL5574
IC18 HC574F
IC19 HC574F
IC47 MB40778PF
IC48 MB40778PF
IC4 AL5574
IC5 AL5574
IC8 *PAT (AL5574)
IC10 *PAT (AL5574)
IC51 AN78M05
IC49 AN78L09
IC50 AN79L09
VIDEOG
PRGAIN
PBGAIN
D/A Y
D/A PR
D/A PB
YRCLK
TAPE WIDE
CRCK
DET 1
DET 2
EXCEPT AU-665/NTSC,PAL
CCIR601
NTSC
PAL

	R134	R135	IC1	IC2	IC3	C53	R116	C54	R117	R118	C55	C47	C48	IC6
AU-665/NTSC,PAL	—	0	—	—	—	—	—	—	—	—	—	—	—	—
EXCEPT AU665/NTSC,PAL	0	—	LS123	HC08	HC00	0.022	10K	6R3V10	270K	100K	6R3V22	0.1	0.1	HC74

	R14	R15	R53	R60	R52	VR1	IC46	IC56	C23
AU-665/NTSC	—	10K(G)	8200(G)	—	18K(G)	1K	—	HA19505	50V1
EXCEPT AU-665/NSTC	10K(G)	—	22K(G)	1500(G)	4700(G)	10K	MB40778PF	—	16V22

	IC13	IC14	IC15	IC16	C50	C51	C52	R119	R120	R121	R122	R123	R124	R125	R126
NTSC	—	—	—	—	—	—	—	0	0	0	0	0	0	0	0
PAL	HM63021P	74F374	74F157	74F157	0.1	0.1	0.1	—	—	—	—	—	—	—	—

W1(TBC & SYNC GEN) SCHEMATIC DIAGRAM 2/6

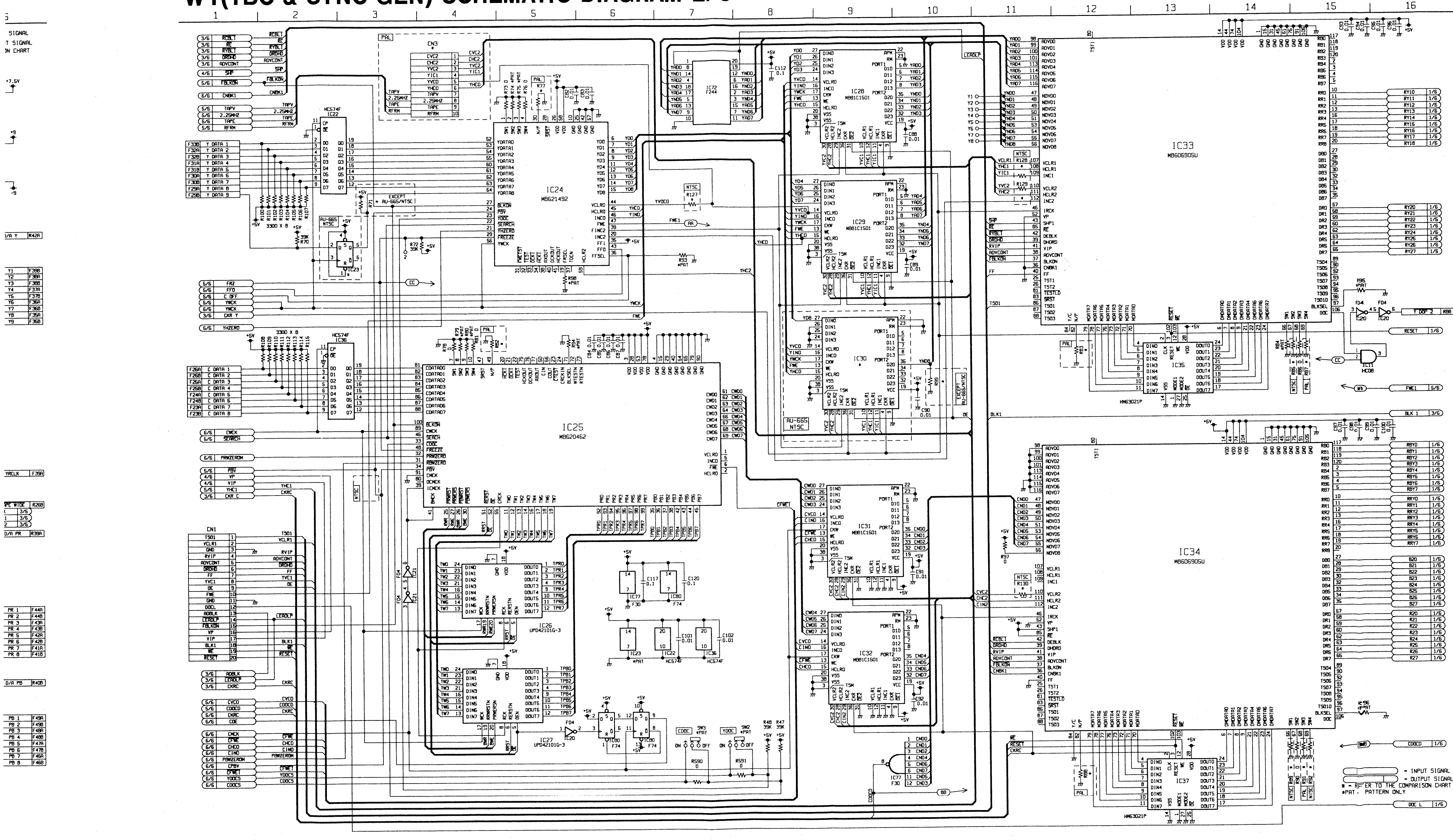
1
2
3
4
5
6
7
8
9
10
11
12
13
14
15
16
IC22 HC574F
IC23
IC24 MB621492
IC25 MB620462
IC26 UPD42101G-3
IC27 UPD42101G-3
IC28 MB81C1501
IC29 MB81C1501
IC30 MB81C1501
IC31 MB81C1501
IC32 MB81C1501
IC33 MB60690SU
IC34 MB60690SU
IC35 HM63021P
IC36 HC574F
IC37 HM63021P
IC72 F244
IC77 F30
IC11 HC08
IC80 F74
CN1
CN3
Y DATA 1
Y DATA 2
Y DATA 3
Y DATA 4
Y DATA 5
Y DATA 6
Y DATA 7
Y DATA 8
Y DATA 9
C DATA 1
C DATA 2
C DATA 3
C DATA 4
C DATA 5
C DATA 6
C DATA 7
C DATA 8
3300 X 8
EXCEPT AU-665/NTSC
AU-665 NTSC
PAL
NTSC
SW2 *PAT
SW3 *PAT
Y DOF 2
RESET
FWE1
BLK 1
CDOCD 1/6
DOC L 1/6
+5V

▭ = INPUT SIGNAL
▭ = OUTPUT SIGNAL
* = REFER TO THE COMPARISON CHART
*PAT : PATTERN ONLY

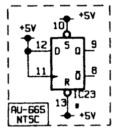
+5V
IC23
AU-665 NTSC

	IC30	IC23	R71	R99
AU-665/NSTC	MB81C1501	74HC74	—	—
EXCEPT AU-665/NTSC	—	—	39K	39K

	CN3	R77	R82	R83	R85	R88	R89	R91	R92	R127	R128	R129	R130	R87
NTSC	—	—	—	—	0	—	0	—	0	0	0	0	0	—
PAL	VJP2983A010	0	0	0	—	0	—	0	—	—	—	—	—	0

PATTERN ONLY	R73,R74,R75,R76 R78,R79,R80,R81 R85,R86,R87,R90 R91 SW2,SW3(VSS0126-2)

TBC & SYNC GEN
SCHEMATIC DIAGRAM

MODEL / TYPE	AU-65H	AU-63H	AU-62H
NTSC	VEP88091A	VEP88091A	VEP88091A
PAL	VEP88091C	VEP88091C	VEP88091C

W1(TBC & SYNC GEN) SCHEMATIC DIAGRAM 3/6

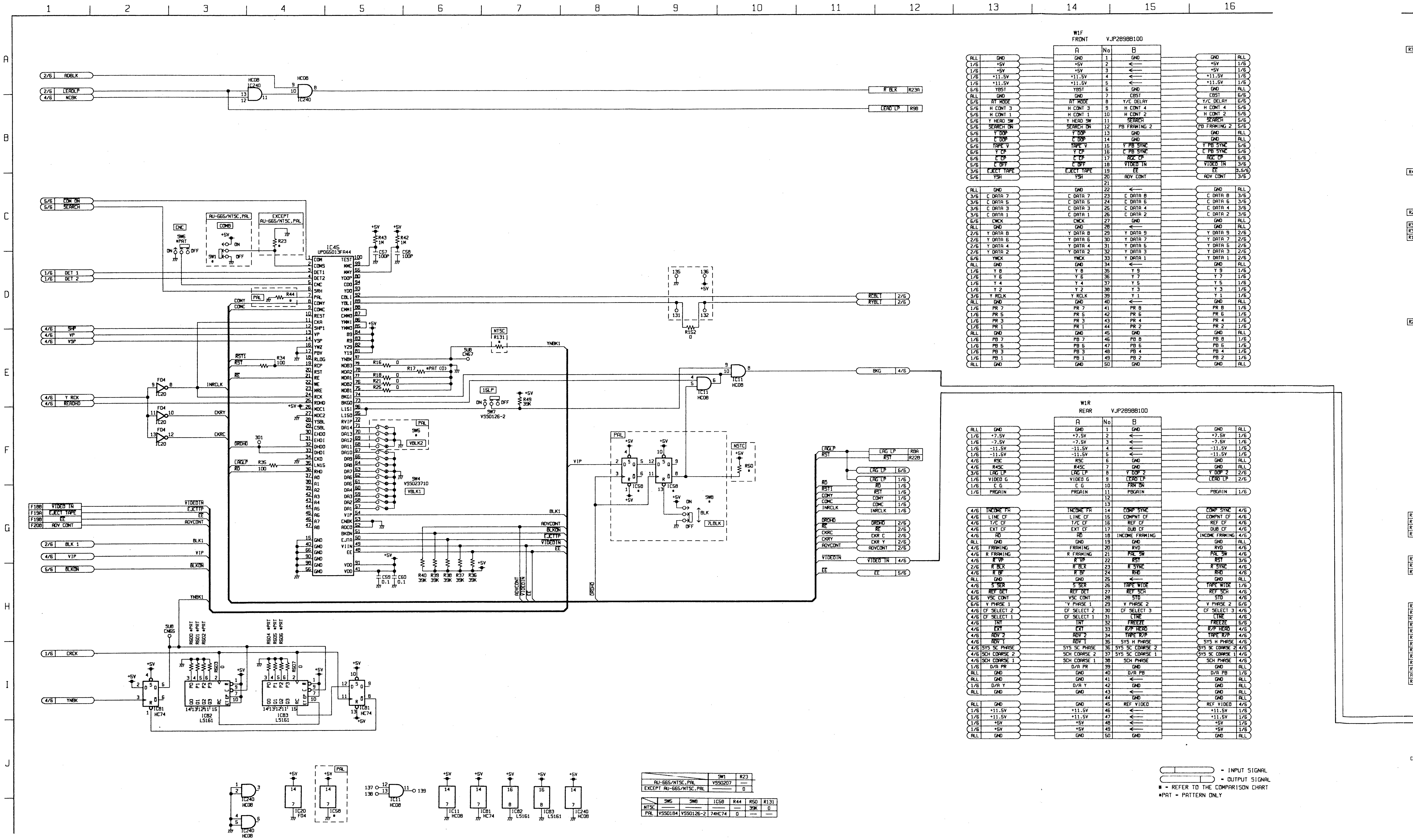

1
2
3
4
5
6
7
8
9
10
11
12
13
14
15
16
A
B
C
D
E
F
G
H
I
J
IC45
UPD65013FA44
HC08
IC240
R BLK
R23A
LEAD LP
R98
ADBLK
LEADLP
NCBK
COM ON
SEARCH
DET 1
DET 2
SHP
VP
VSP
Y RCK
READHD
VIDEO IN
EJECT TAPE
EE
ADV CONT
BLK 1
VIP
BLKON
CRCK
YNBK
RCBLT
RYBLT
BKG
LAG LP
RST
R8A
R22B
VIDEO IN
IC20
F04
IC58
IC11
IC81
HC74
IC82
LS161
IC83
SW1
SW4
VSS023710
SW5
SW7
VSS0126-2
SW8
VBLK1
VBLK2
7LBLK
NTSC
PAL
AU-665/NTSC,PAL
EXCEPT AU-665/NTSC,PAL
W1F
FRONT
VJP28988100
W1R
REAR
VJP28988100

	SW1	R23
AU-665/NTSC.PAL	VSS0207	—
EXCEPT AU-665/NTSC.PAL	—	0

	SW5	SW8	IC58	R44	R50	R131
NTSC	—	—	—	—	39K	0
PAL	VSS0184	VSS0126-2	74HC74	0	—	—

- INPUT SIGNAL
- OUTPUT SIGNAL

* - REFER TO THE COMPARISON CHART
*PAT - PATTERN ONLY

REVERSE SIDE **TBC & SYNC GEN SCHEMATIC DIAGRAM**

W1(TBC & SYNC GEN) SCHEMATIC DIAGRAM 4/6

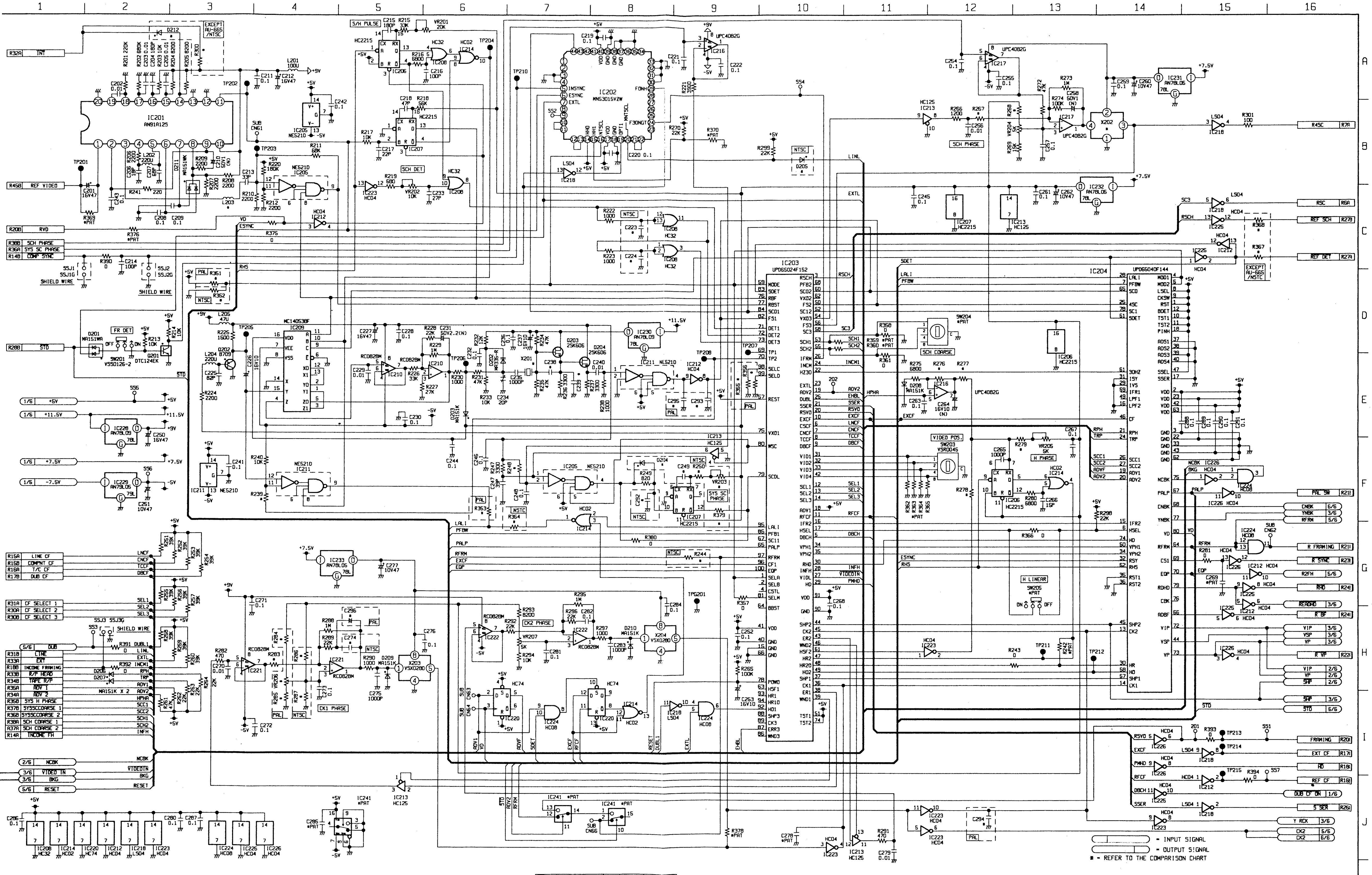
1
2
3
4
5
6
7
8
9
10
11
12
13
14
15
16
A
B
C
D
E
F
G
H
I
J
IC201 AN91A125
IC202 MN53015VZW
IC203 UPD65024F152
IC204 UPD65040F144
IC209 MC14053BF
= INPUT SIGNAL
= OUTPUT SIGNAL
* = REFER TO THE COMPARISON CHART

	R300	D212	R367	R368
AU-665/NTSC,PAL	—	—	—	—
EXCEPT AU665/NTSC,PAL	22K	MA151K	0	0

	L203	R351	R352	C223	C224	D205	X201	C238	C239	R353	R354	R355	R356	D204	C292	C249	R250	VR203	C293	C295	C294
NTSC	68U	—	0	15P	15P	MA151K	VSX0081	47P	47P	—	0	—	—	MA151K	10P	27P	1500	2K	—	—	—
PAL	39U	0	—	—	—	—	VSX0114	15P	22P	0	—	0	0	—	—	—	—	—	56P	56P	56P

	R286	R287	VR206	R284	R285	R244	X202	R268	R267	R276	R277	R278	R279	R239	R248	R283	C296	C274	R379
NTSC	18K	15K	—	—	—	0	VSX0338	12K	82K	10K	33K	82K	8200	1000	8200	47K	—	0.1	0
PAL	—	—	5K	18K	15K	—	VSX0270	15K	47K	22K	15K	27K	3300	12K	12K	33K	50VR47(N)	—	—

MODEL / TYPE	AU-65H	AU-63H	AU-62H
NTSC	VEP88091A	VEP88091A	VEP88091A
PAL	VEP88091C	VEP88091C	VEP88091C

W1(TBC & SYNC GEN) SCHEMATIC DIAGRAM 5/6

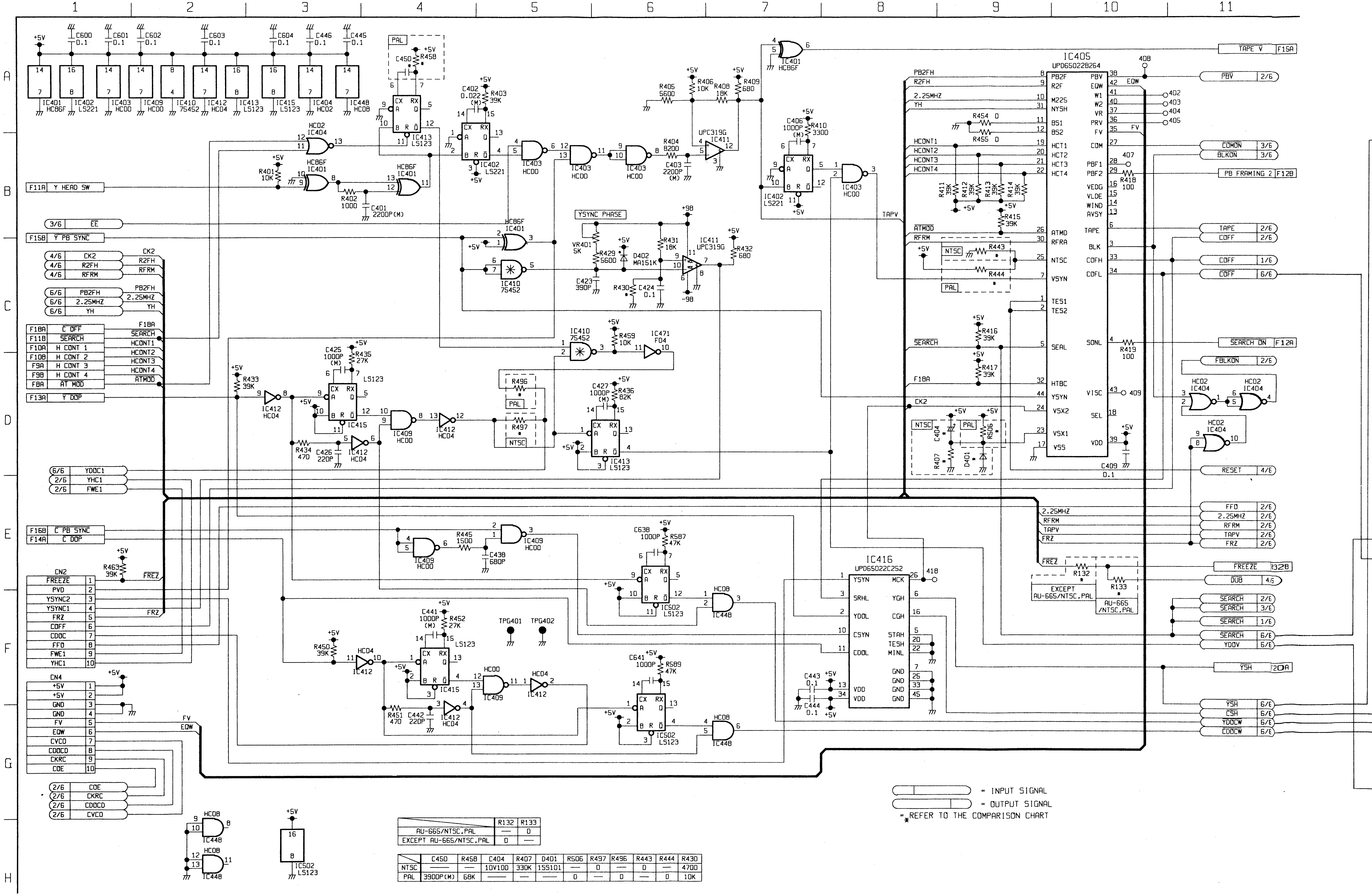

1
2
3
4
5
6
7
8
9
10
11
A
B
C
D
E
F
G
H
+5V
C600 0.1
C601 0.1
C602 0.1
C603 0.1
C604 0.1
C446 0.1
C445 0.1
IC401 HC86F
IC402 LS221
IC403 HC00
IC409 HC00
IC410 75452
IC412 HC04
IC413 LS123
IC415 LS123
IC404 HC02
IC448 HC08
PAL
C450
R458
HC02 IC404
HC86F IC401
R401 10K
R402 1000
C401 2200P(M)
C402 0.022 (M)
R403 39K
IC402 LS221
IC403 HC00
R405 5600
R406 10K
R408 18K
R409 680
R404 8200
C403 2200P (M)
UPC319G IC411
HC86F IC401
C406 1000P (M)
R410 3300
IC402 LS221
IC403 HC00
TAPV
F11A Y HEAD SW
3/6 EE
F15B Y PB SYNC
4/6 CK2
4/6 R2FH
4/6 RFRM
6/6 PB2FH
6/6 2.25MHZ
6/6 YH
CK2
R2FH
RFRM
PB2FH
2.25MHZ
YH
F18A C OFF
F11B SEARCH
F10A H CONT 1
F10B H CONT 2
F9A H CONT 3
F9B H CONT 4
F8A AT MOD
F13A Y DOP
F18A
SEARCH
HCONT1
HCONT2
HCONT3
HCONT4
ATMOD
YSYNC PHASE
VR401 5K
R429 5600
D402 MA151K
R431 18K
C423 390P
R430 *
C424 0.1
+9B
-9B
IC411 UPC319G
R432 680
IC410 75452
C425 1000P (M)
R435 27K
LS123
R433 39K
IC412 HC04
IC415
R434 470
C426 220P
IC409 HC00
R459 10K
IC471 F04
R496 *
R497 *
NTSC
C427 1000P (M)
R436 82K
IC413 LS123
6/6 YDOC1
2/6 YHC1
2/6 FWE1
F16B C PB SYNC
F14A C DOP
R445 1500
C438 680P
R463 39K
FREZ
FRZ
CN2
FREEZE
PVD
YSYNC2
YSYNC1
FRZ
COFF
CDOC
FFO
FWE1
YHC1
CN4
GND
FV
EOW
CVCO
CDOCD
CKRC
COE
2/6 COE
2/6 CKRC
2/6 CDOCD
2/6 CVCO
C638 1000P
R587 47K
IC502 LS123
IC448
C441 1000P (M)
R452 27K
R450 39K
HC04 IC412
IC415
R451 470
C442 220P
TPG401
TPG402
HC00 IC409
HC04 IC412
C641 1000P
R589 47K
IC502 LS123
HC08 IC448
HC08 IC448
IC502 LS123
IC405
UPD65022B264
PB2FH
R2FH
2.25MHZ
YH
PB2F
R2F
M225
NYSH
BS1
BS2
HCT1
HCT2
HCT3
HCT4
R454 0
R455 0
HCONT1
HCONT2
HCONT3
HCONT4
R411 39K
R412 39K
R413 39K
R414 39K
R415 39K
ATMOD
RFRM
ATMD
RFRA
NTSC
VSYN
R443
R444
TES1
TES2
R416 39K
R417 39K
SEARCH
SEAL
HTBC
YSYN
VSX2
VSX1
VSS
F18A
CK2
C404
R407
R506
D401
PBV
EOW
W1
W2
VR
PRV
FV
COM
PBF1
PBF2
VEDG
VLDE
WIND
AVSY
TAPE
BLK
COFH
COFL
SONL
VISC
SEL
VDD
408
402
403
404
405
407
R418 100
R419 100
409
C409 0.1
TAPE V F15A
PBV 2/6
COMON 3/6
BLKON 3/6
PB FRAMING 2 F12B
TAPE 2/6
COFF 2/6
COFF 1/6
COFF 6/6
SEARCH ON F12A
FBLKON 2/6
HC02 IC404
RESET 4/6
2.25MHZ
RFRM
TAPV
FRZ
FFO 2/6
2.25MHZ 2/6
RFRM 2/6
TAPV 2/6
FRZ 2/6
FREZ
R132 *
R133 *
EXCEPT AU-665/NTSC.PAL
AU-665 /NTSC.PAL
FREEZE F32B
DUB 4/6
SEARCH 2/6
SEARCH 3/6
SEARCH 1/6
SEARCH 6/6
YDOV 6/6
YSH F20A
YSH 6/6
CSH 6/6
YDOCW 6/6
CDOCW 6/6
IC416
UPD65022C252
YSYN
SRHL
YDOL
CSYN
CDOL
MCK
YGH
CGH
STAH
TESH
MINL
GND
VDD
418
C443 0.1
C444 0.1

	R132	R133
AU-665/NTSC,PAL	—	0
EXCEPT AU-665/NTSC,PAL	0	—

	C450	R458	C404	R407	D401	R506	R497	R496	R443	R444	R430
NTSC	—	—	10V100	330K	1SS101	—	0	—	0	—	4700
PAL	3900P(M)	68K	—	—	—	0	—	0	—	0	10K

= INPUT SIGNAL

= OUTPUT SIGNAL

*REFER TO THE COMPARISON CHART

W1(TBC & SYNC GEN) SCHEMATIC DIAGRAM 6/6

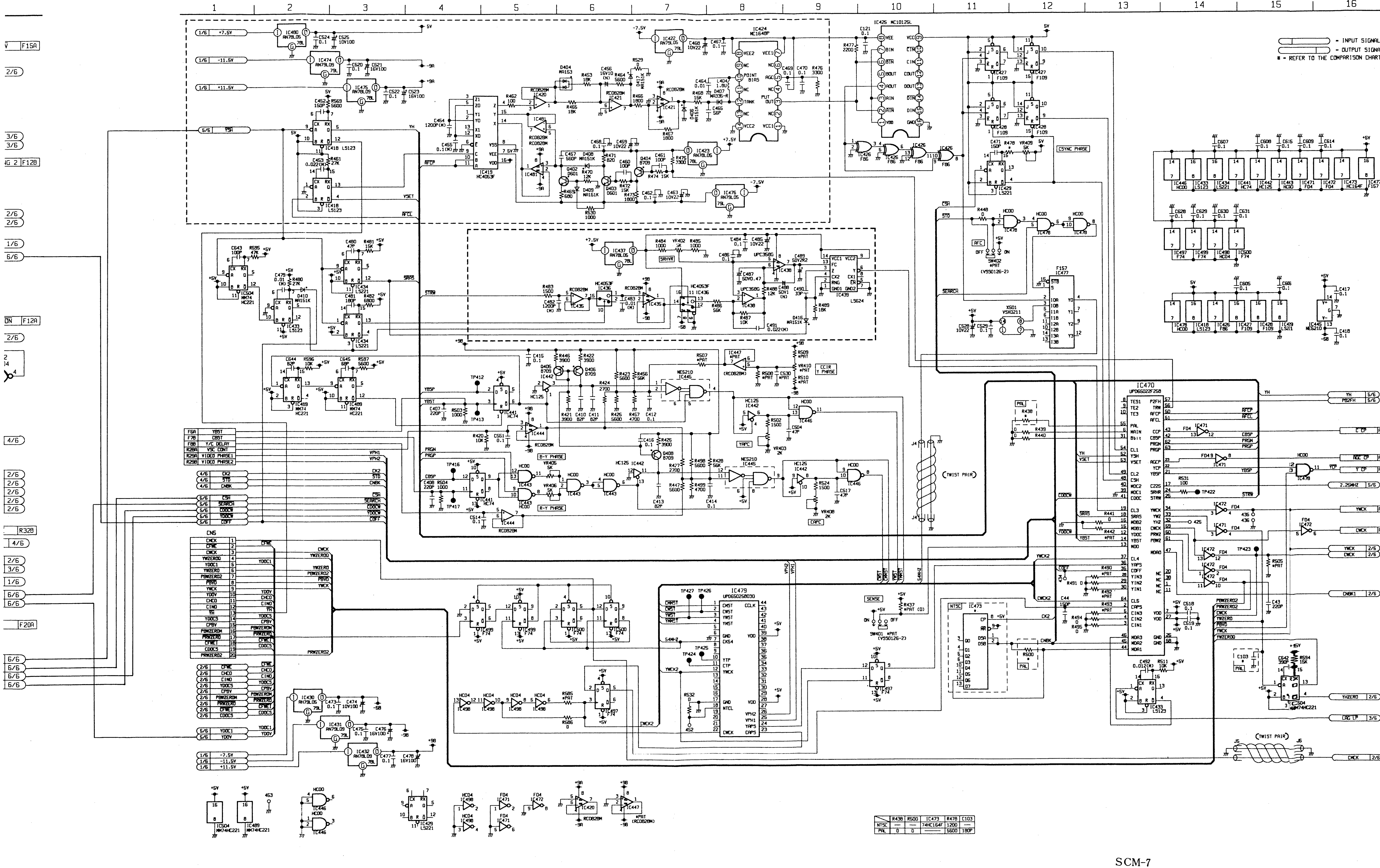

1
2
3
4
5
6
7
8
9
10
11
12
13
14
15
16
IC490 AN78L05
IC474 AN79L09
IC475 AN78L09
IC418 LS123
IC419 HC4053F
IC420 RC0828M
IC421 RC0828M
IC422 AN79L05
IC423 AN78L05
IC424 MC1648P
IC425 MC10125L
IC426 F86
IC427 F109
IC428 F109
IC429 LS221
IC476 AN79L05
IC478 HC00
IC477 F157
IC481 RC0828M
IC504 MM74 HC221
IC433 LS123
IC434 LS221
IC437 AN78L05
IC435 RC0828M
IC436 HC4053F
IC438 UPC358G
IC439 LS624
IC440 RC0828M
IC441 HC74
IC442 HC125
IC443 HC00
IC444 RC0828M
IC445 NE5210
IC446 HC00
IC447 RC0828M
IC489 HC221
IC470 UPD65022F258
IC471 F04
IC472 F04
IC473 74HC164F
IC479 UPD65025S8030
IC498 HC04
IC499 F74
IC500 F74
IC497 F74
IC430 AN79L05
IC431 AN79L09
IC432 AN78L09
XS01 YSX0211
SW402 *PAT (YSS0126-2)
SW401 *PAT (YSS0126-2)
J4
J5
(TWIST PAIR)
CN5
B-Y PHASE
R-Y PHASE
C SYNC PHASE
CCIR Y PHASE
YAPC
CAPC
SRHVR
SENSE
NTSC
PAL
AFC

- INPUT SIGNAL
- OUTPUT SIGNA
* - REFER TO THE COMPARISON CHART

	R438	R500	IC473	R478	C103
NTSC	—	—	74HC164F	1200	—
PAL	0	0	—	5600	180P

ENCODER SCHEMATIC DIAGRAM

MODEL / TYPE	AU-65H	AU-63H	AU-62H
NTSC	VEP88063P	VEP88063G	VEP88063G
PAL	VEP88063M	VEP88063N	VEP88063Q

W2 (ENCODER) SCHEMATIC DIAGRAM 1/4 (FOR NTSC)

W2 (ENCOD

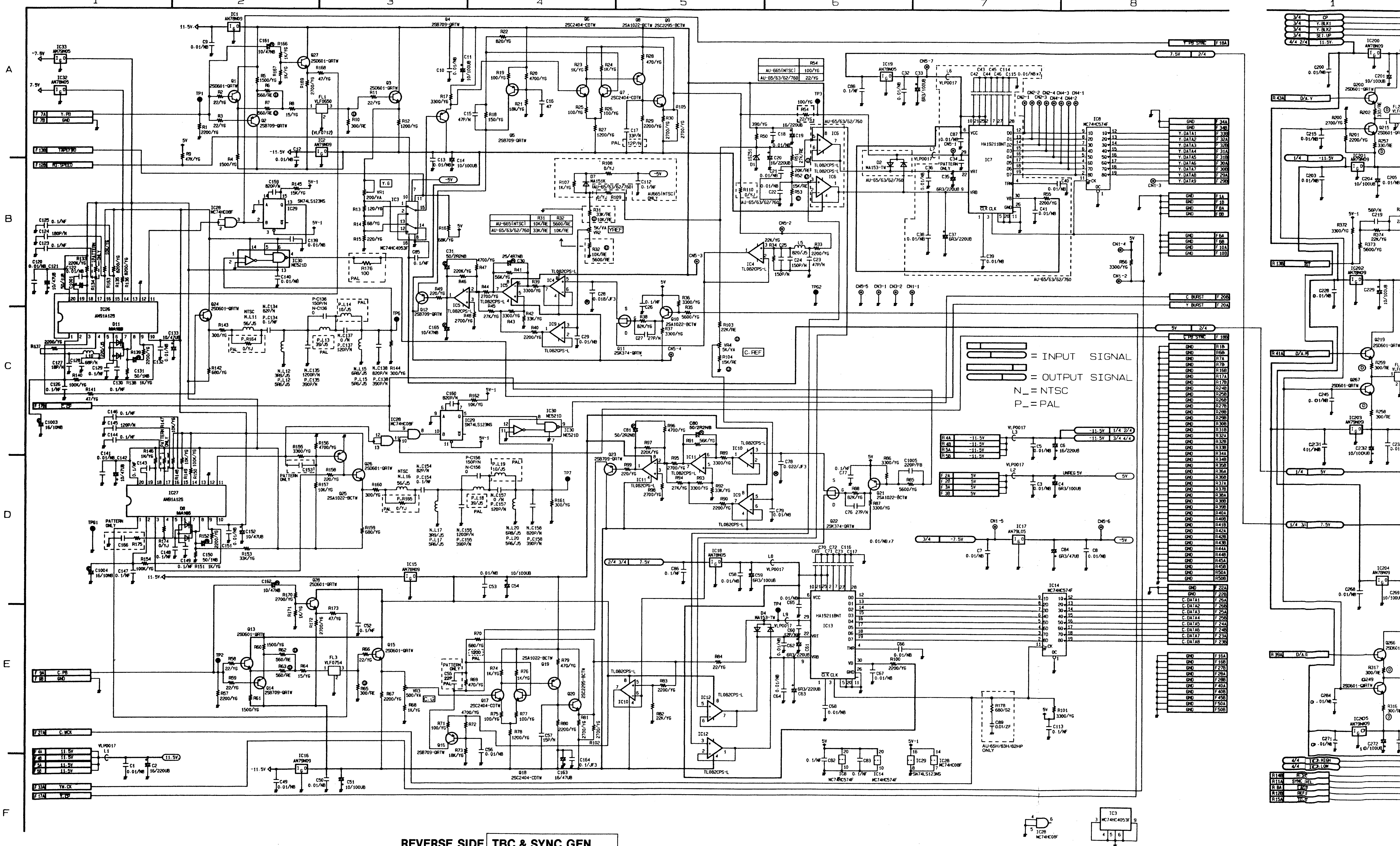
1
2
3
4
5
6
7
8
A
B
C
D
E
F
IC1 AN78N09
IC2 AN79N09
IC3 MC74HC4053F
IC4 TL082CPS-L
IC5 TL082CPS-L
IC6 TL082CPS-L
IC7 MA19211BNT
IC8 MC74HC574F
IC9 TL082CPS-L
IC10 TL082CPS-L
IC11 TL082CPS-L
IC12 TL082CPS-L
IC13 MA19211BNT
IC14 MC74HC574F
IC15 AN78N09
IC16 AN79N09
IC17 AN79L05
IC18 AN78N05
IC19 AN78N05
IC26 AN91A12S
IC27 AN91A12S
IC28 MC74HC08F
IC29 SN74LS123NS
IC30 NE521D
IC32 AN78N05
IC33 AN79N05
F 7A Y.PB
F 7B GND
F 13B TAPEFWD
F 12B AI-SPEED
F 9A C.PB
F 9B GND
F 27A C.MCK
F 33A YH.CK
F 17A V.CP
Y.DATA1
Y.DATA2
Y.DATA3
Y.DATA4
Y.DATA5
Y.DATA6
Y.DATA7
Y.DATA8
Y.DATA9
C.DATA1
C.DATA2
C.DATA3
C.DATA4
C.DATA5
C.DATA6
C.DATA7
C.DATA8
C BURST
Y BURST
Y.PB SYNC
C.PB SYNC
UNREG 5V
-11.5V
11.5V
5V
-7.5V
7.5V
C. REF
YREF
PATTERN ONLY
TP1
TP2
TP3
TP4
TP6
TP7
TP61
TP62
= INPUT SIGNAL
= OUTPUT SIGNAL
N_= NTSC
P_= PAL
AU-65H/63H/62HP ONLY

REVERSE SIDE **TBC & SYNC GEN SCHEMATIC DIAGRAM**

W2 (ENCODER) SCHEMATIC DIAGRAM 2/4 (FOR NTSC)

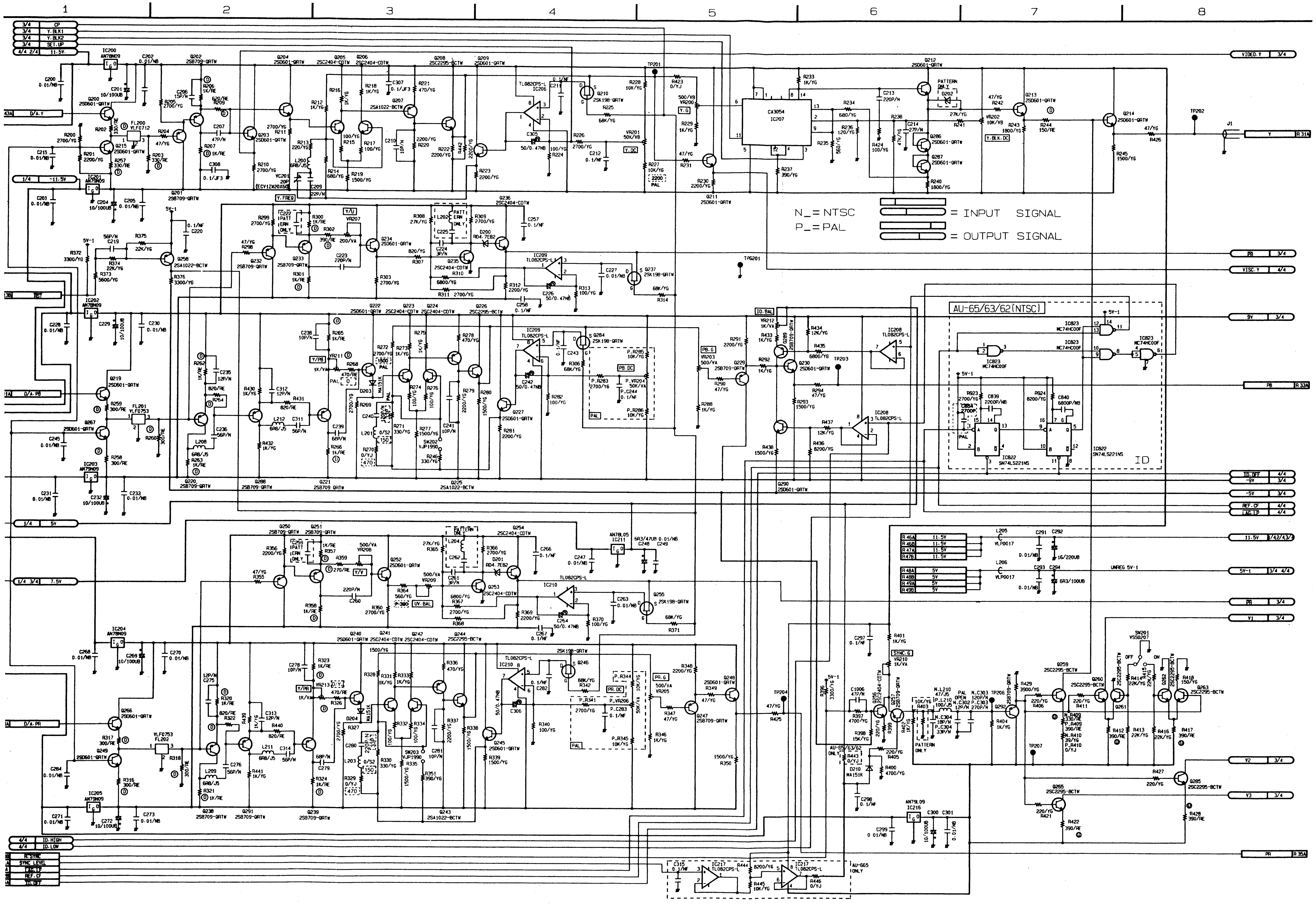
1
2
3
4
5
6
7
8
3/4 CP
3/4 Y.BLK1
3/4 Y.BLK2
3/4 SET.UP
4/4 2/4 11.5V
1/4 -11.5V
1/4 5V
1/4 3/4 7.5V
4/4 ID.HIGH
4/4 ID.LOW
H.SYNC
SYNC LEVEL
LAG.TP
REF.CF
ID.OFF
D/A.Y
D/A.PB
D/A.PR
IC200 AN78N09
IC201 AN79N09
IC202 AN78N09
IC203 AN79N09
IC204 AN78N09
IC205 AN79N09
IC206 TL082CPS-L
IC207 CA3054
IC208 TL082CPS-L
IC209 TL082CPS-L
IC210 TL082CPS-L
IC211 AN78L05
IC216 AN79L09
IC217 TL082CPS-L
IC822 SN74LS221NS
IC823 MC74HC00F
FL200 VLF0712
FL201 VLF0753
FL202 VLF0753
Y.FREQ
Y.DC
Y.G
Y.BLK.DC
PB.G
PB.DC
PR.G
PR.DC
ID.BAL
UV.BAL
SYNC.G
PATTERN ONLY
PAL
AU-65/63/62(NTSC)
ID
AU-665 ONLY
N_=NTSC
P_=PAL
= INPUT SIGNAL
= OUTPUT SIGNAL
VIDEO.Y 3/4
R 31A
PB 3/4
VISC.Y 4/4
9V 3/4
R 33A
ID.OFF 4/4
-9V 3/4
-5V 3/4
REF.CF 4/4
LAG.TP 4/4
11.5V 3/4 2/4 3/4
UNREG 5V-1
5V-1 3/4 4/4
PB 3/4
Y1 3/4
Y2 3/4
Y3 3/4
PR R 35A
R 46A 11.5V
R 46B 11.5V
R 47A 11.5V
R 47B 11.5V
R 48A 5V
R 48B 5V
R 49A 5V
R 49B 5V
SW201 VSS0207
OFF
ON
J1
TP201
TP202
TP203
TP204
TP206
TP207

W2 (ENCODER) SCHEMATIC DIAGRAM 3/4 (FOR NTSC)

MODEL / TYPE	AU-65H	AU-63H	AU-62H
NTSC	VEP88063P	VEP88063G	VEP88063G
PAL	VEP88063C	VEP88063D	VEP88063C

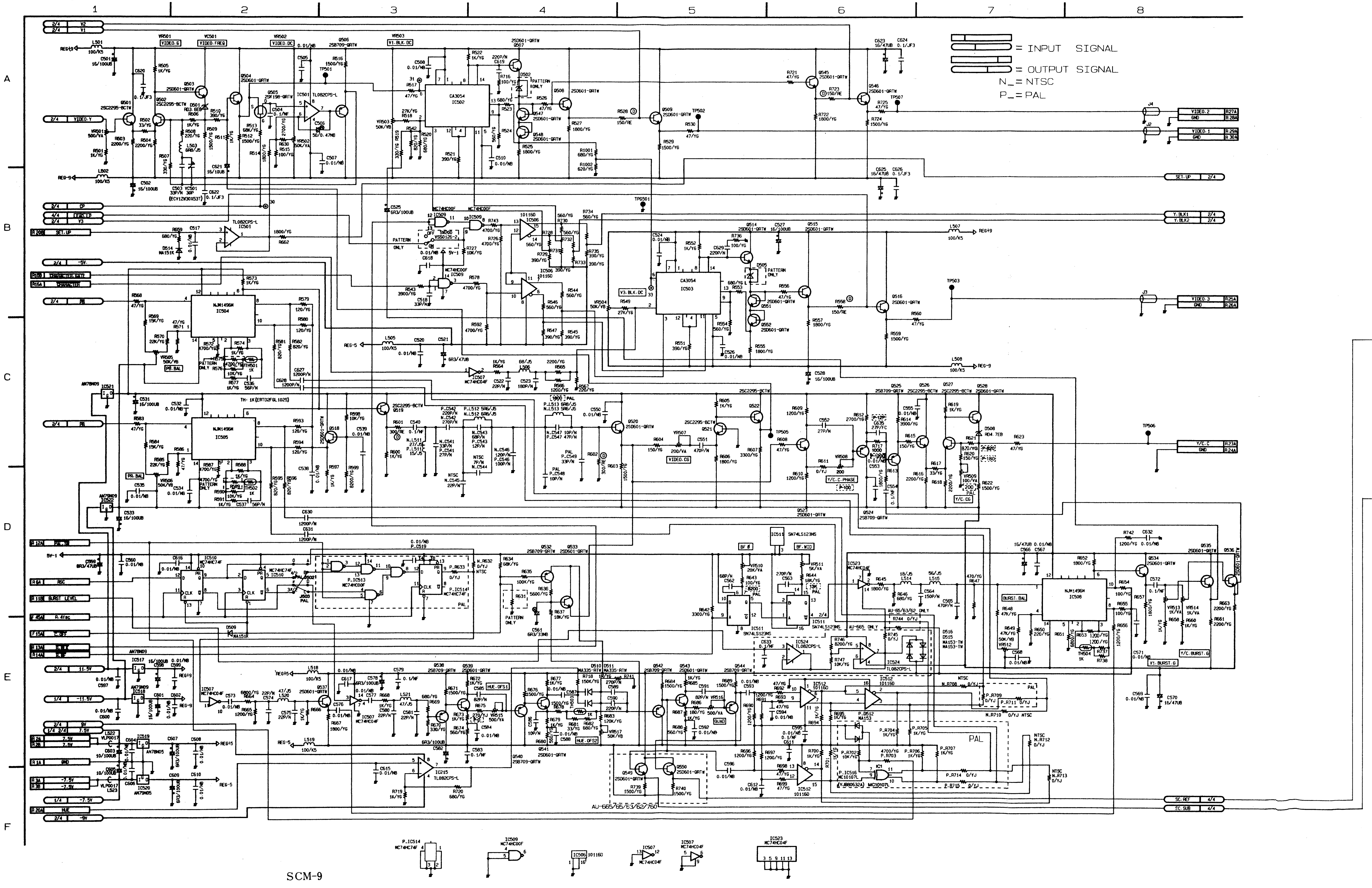

1
2
3
4
5
6
7
8
A
B
C
D
E
F
= INPUT SIGNAL
= OUTPUT SIGNAL
N_= NTSC
P_= PAL
2/4 V2
2/4 V1
2/4 VIDEO.Y
2/4 CP
4/4 LEAD.TP
2/4 Y3
R 20B SET.UP
2/4 -5V
R 16B CHARACTER GATE
R 16A CHARACTER
2/4 PR
2/4 PB
R 12A PAL.SW
5V-1
R 6A RSC
R 11B BURST LEVEL
F 15A R-4fsc
F 15A C.OFF
R 13A
R 14A
2/4 11.5V
1/4 -11.5V
2/4 9V
1/4 2/4 7.5V
R 2A 7.5V
R 2B 7.5V
R 1A GND
R 3A -7.5V
R 3B -7.5V
1/4 -7.5V
R 20A HUE
2/4 -9V
VIDEO.2
GND
R 27A
R 28A
VIDEO.1
GND
R 29A
R 30A
SET.UP 2/4
Y.BLK1 2/4
Y.BLK2 2/4
VIDEO.3
GND
R 25A
R 26A
Y/C.C
GND
R 23A
R 24A
SC.REF 4/4
SC.SUB 4/4
REG+9
REG-9
REG-5
REG+5
VIDEO.G
VIDEO.FREQ
VIDEO.DC
V1.BLK.DC
V3.BLK.DC
PR.BAL
PB.BAL
HUE.OFS1
HUE.OFS2
QUAD
BF.W
BF.WID
BURST.BAL
Y/C.C.PHASE
Y/C.CG
Y/C.BURST.G
V1.BURST.G
VIDEO.CG
CA3054 IC502
CA3054 IC503
NJM1496M IC504
NJM1496M IC505
NJM1496M IC508
TL082CPS-L IC501
TL082CPS-L IC524
TL082CPS-L IC215
MC74HC00F IC509
MC74HC04F IC507
MC74HC74F IC510
MC74HC74F P.IC514
P.IC513
10116D IC506
10116D IC512
SN74LS123NS IC511
MC74HC04F IC523
AN78N09 IC521
AN79N09 IC522
AN78N09 IC517
AN79N09 IC518
AN78N05 IC519
AN79N05 IC520
MC10107L P.IC516
MC10107L IC1
PATTERN ONLY
AU-65/63/62 ONLY
AU-665 ONLY
AU-665/65/63/62/760
PAL
NTSC
TP501
TP502
TP503
TP505
TP506
TP507
TP6501
J2
J3
J4

W2(ENCODER) SCHEMATIC DIAGRAM 4/4(FOR AU-65H PAL)

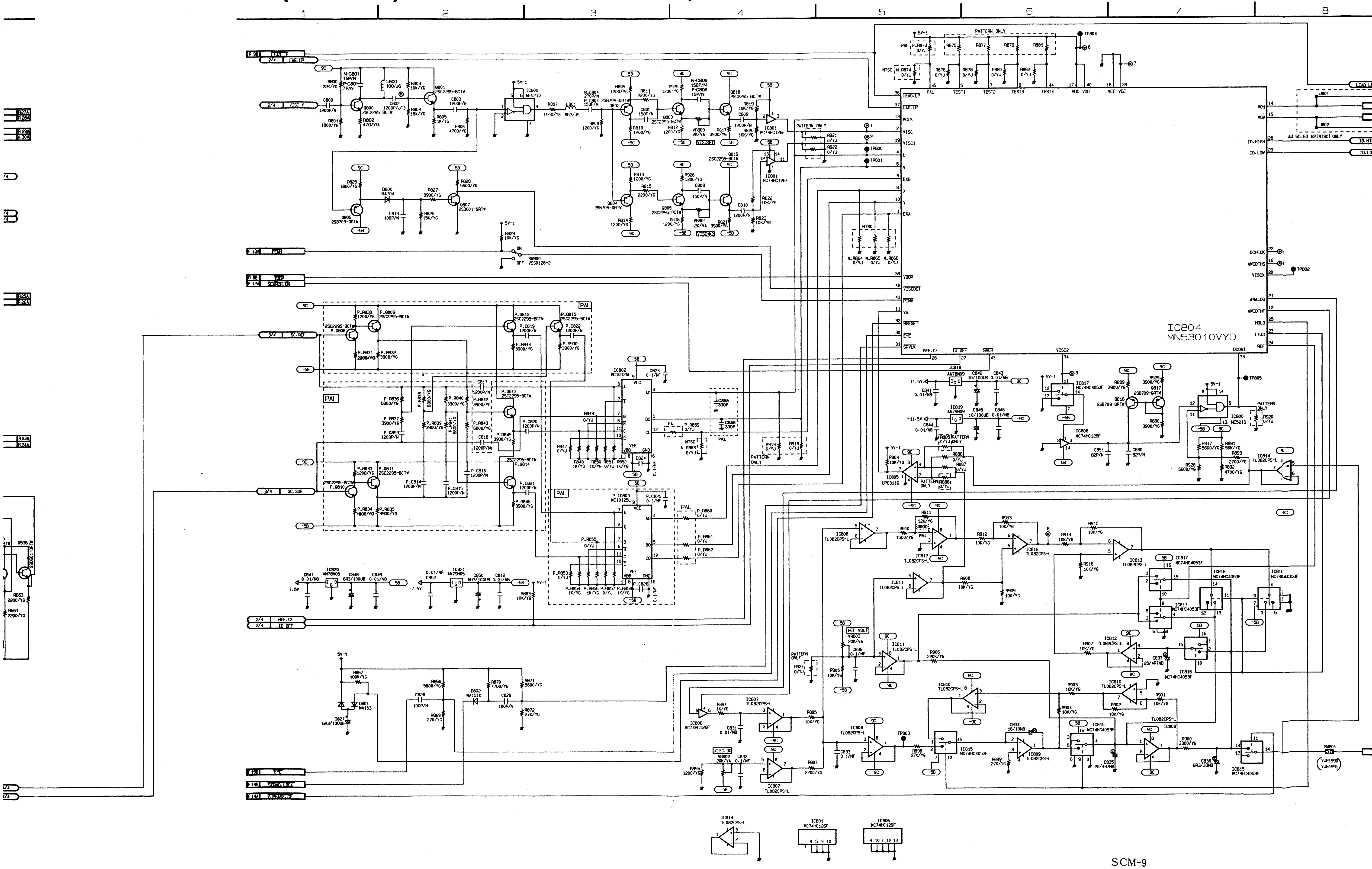
1
2
3
4
5
6
7
8
IC804
MN53010VYD
IC800 NE521D
IC802 MC10125L
IC803 MC10125L
IC805 UPC311G
IC806 MC74HC126F
IC807 TL082CPS-L
IC808 TL082CPS-L
IC809
IC810 TL082CPS-L
IC811 TL082CPS-L
IC812 TL082CPS-L
IC813 TL082CPS-L
IC814 TL082CPS-L
IC815 MC74HC4053F
IC816 MC74HC4053F
IC817 MC74HC4053F
IC818 AN78N09
IC819 AN79N09
IC820 AN78N05
IC821 AN79N05
IC801 MC74HC126F
PATTERN ONLY
PAL
NTSC
TP800
TP801
TP802
TP803
TP804
TP805
SW800 VSS0126-2
SW801
VJP1990
VJB1991
2/4 VISC.Y
3/4 SC.REF
3/4 SC.SUB
2/4 REF.CF
2/4 ID.OFF
F 13A PINH
F 15B E-E
F 14B SERVO LOCK
F 14A V.PHASE.CF
AU-65.63.62(NTSC) ONLY

DECODER
SCHEMATIC DIAGRAM

TYPE \ MODEL	AU-65H	AU-63H	AU-62H
NTSC	VEP83172A	Not Used	Not Used
PAL	SCM-12,13	Not Used	Not Used

W4(DECODER) SCHEMATIC DIAGRAM 1/4(FOR AU-65H NTSC)

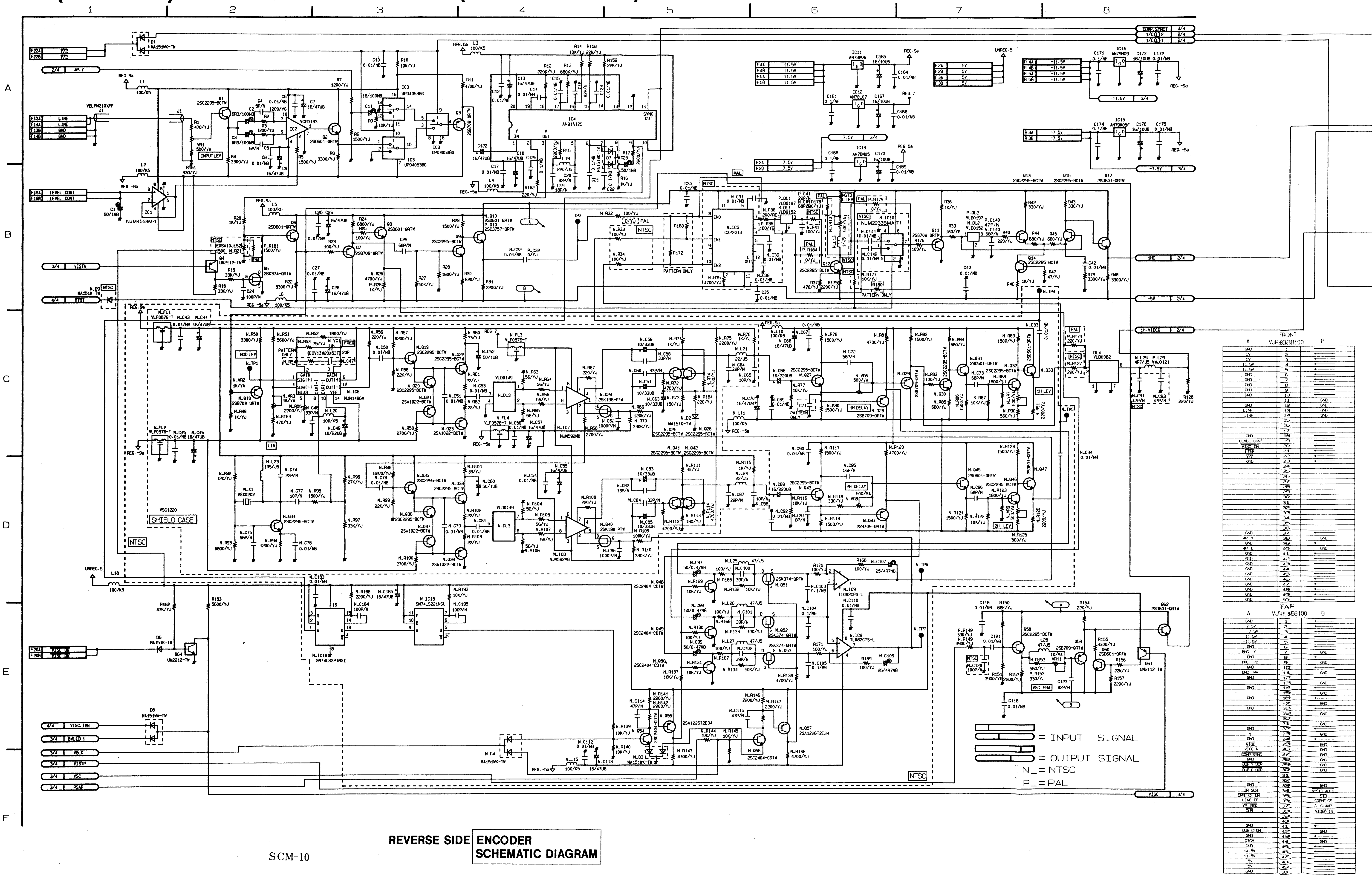
1
2
3
4
5
6
7
8
A
B
C
D
E
F
Y/C
LINE
GND
LEVEL CONT
VISTN
STDI
VISC DR
VISC-TWG
BWL
VBLK
VISTP
VISC
PSAP
IC1 NJM4558M-1
IC2 YC80133
IC3 UPD4053BG
IC4 AN9141ZS
IC5 CX22013
IC6 NJM1496M
IC7 NJM592M8
IC8 NJM592M8
IC9 TL082CPS-L
IC10 NJM2233BMAT1
IC11 AN78M09
IC12 AN78L07
IC13 AN78M05
IC14 AN79N09
IC15 AN79M05F
IC18 SN74LS221NSL
PATTERN ONLY
1H DELAY
2H DELAY
1H LEV
2H LEV
1HC
1H VIDEO
-5V
-11.5V
-7.5V
VSC PHA
SHIELD CASE
NTSC
PAL
FRONT
REAR
= INPUT SIGNAL
= OUTPUT SIGNAL
N_= NTSC
P_= PAL

REVERSE SIDE **ENCODER SCHEMATIC DIAGRAM**

W4(DECODER) SCHEMATIC DIAGRAM 2/4(FOR AU-65H NTSC)

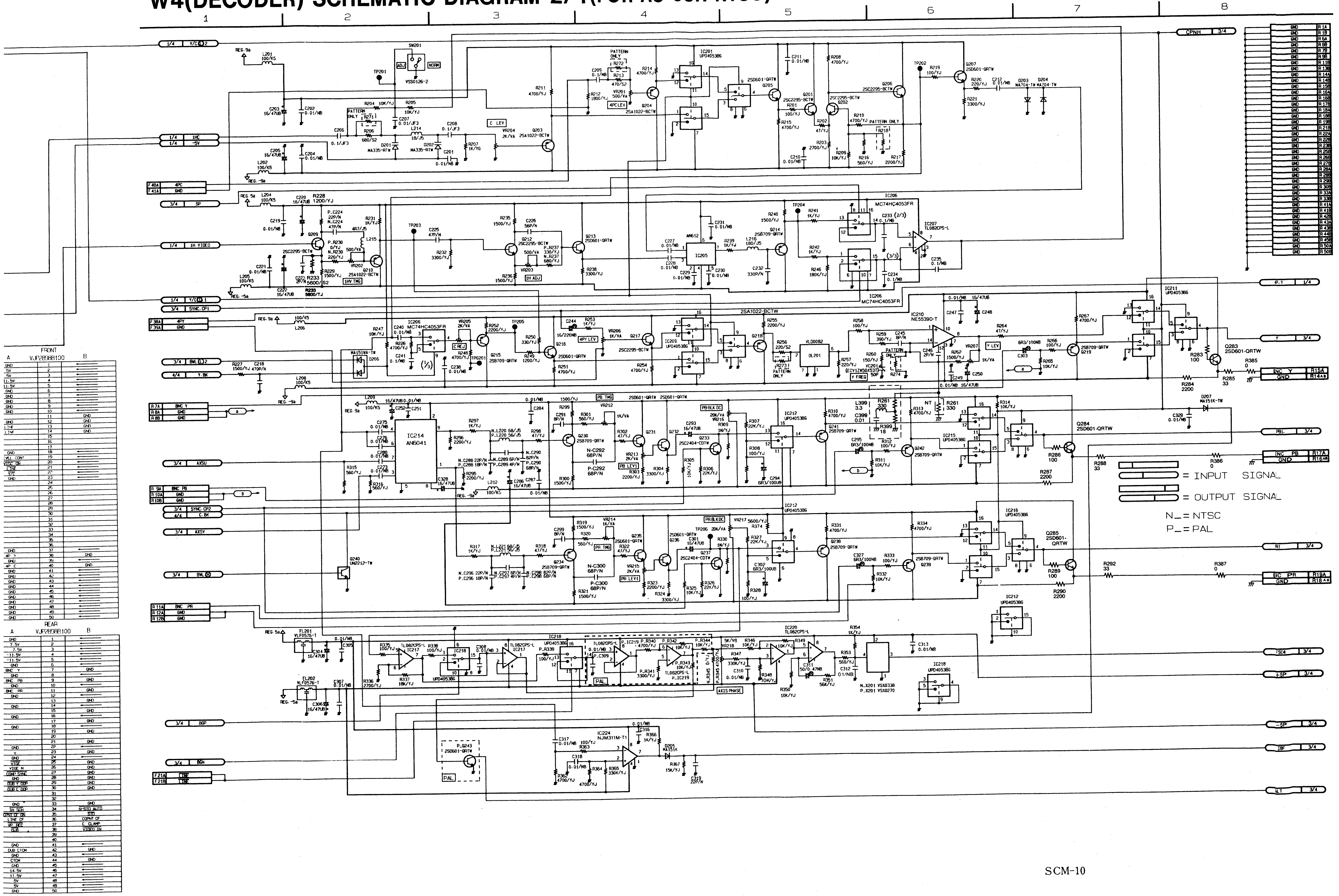
1
2
3
4
5
6
7
8
SW201
VSS0126-2
ADJ
NORM
TP201
TP202
TP203
TP204
TP205
TP206
IC201 UPD4053BG
IC205 MC74HC4053FR
IC206 MC74HC4053FR
IC207 TL082CPS-L
IC209 UPD4053BG
IC210 NE5539D-T
IC211 UPD4053BG
IC212 UPD4053BG
IC214 AN5041
IC215 UPD4053BG
IC216 UPD4053BG
IC217 TL082CPS-L
IC218 UPD4053BG
IC219 TL082CPS-L
IC220 TL082CPS-L
IC224 NJM311M-T1
AN612
DL201
VLD0082
PATTERN ONLY
C LEV
4PC LEV
1H ADJ
1HV TNG
C REJ
4PY LEV
Y LEV
Y FREQ
PB TNG
PB BLK DC
PB LEV1
PR TNG
PR BLK DC
PR LEV1
PAL
AXIS PHASE
CPNH 3/4
1/4 Y/C
1/4 1HC
1/4 -5V
F40A 4PC
F41A GND
3/4 SP
1/4 1H.VIDEO
1/4 Y/C
3/4 SYNC.CP1
F38A 4PY
F39A GND
3/4 BWL
4/4 Y.BK
R 7A BNC Y
R 8A GND
R 8B GND
3/4 AXSU
R 9A BNC PB
R 10A GND
R 10B GND
3/4 SYNC.CP2
4/4 C.BK
3/4 AXSV
3/4 BWL
R 11A BNC PR
R 12A GND
R 12B GND
3/4 BGP
3/4 BGN
F21A TINF
F21B TINF
P.Y 1/4
Y 3/4
ENC Y R15A
GND R14AB
PB 3/4
ENC PB R17A
GND R16AB
R 3/4
ENC PR R19A
GND R18AB
SC4 3/4
+SP 3/4
-SP 3/4
IBF 3/4
ULT 3/4
FRONT
VJP2808B100
REAR
VJP2808B100
A
B
= INPUT SIGNAL
= OUTPUT SIGNAL
N_= NTSC
P_= PAL

MODEL TYPE	AU-65H	AU-63H	AU-62H
NTSC	VEP83172A	Not Used	Not Used
PAL	SCM-12,13	Not Used	Not Used

W4(DECODER) SCHEMATIC DIAGRAM 3/4(FOR AU-65H NTSC)

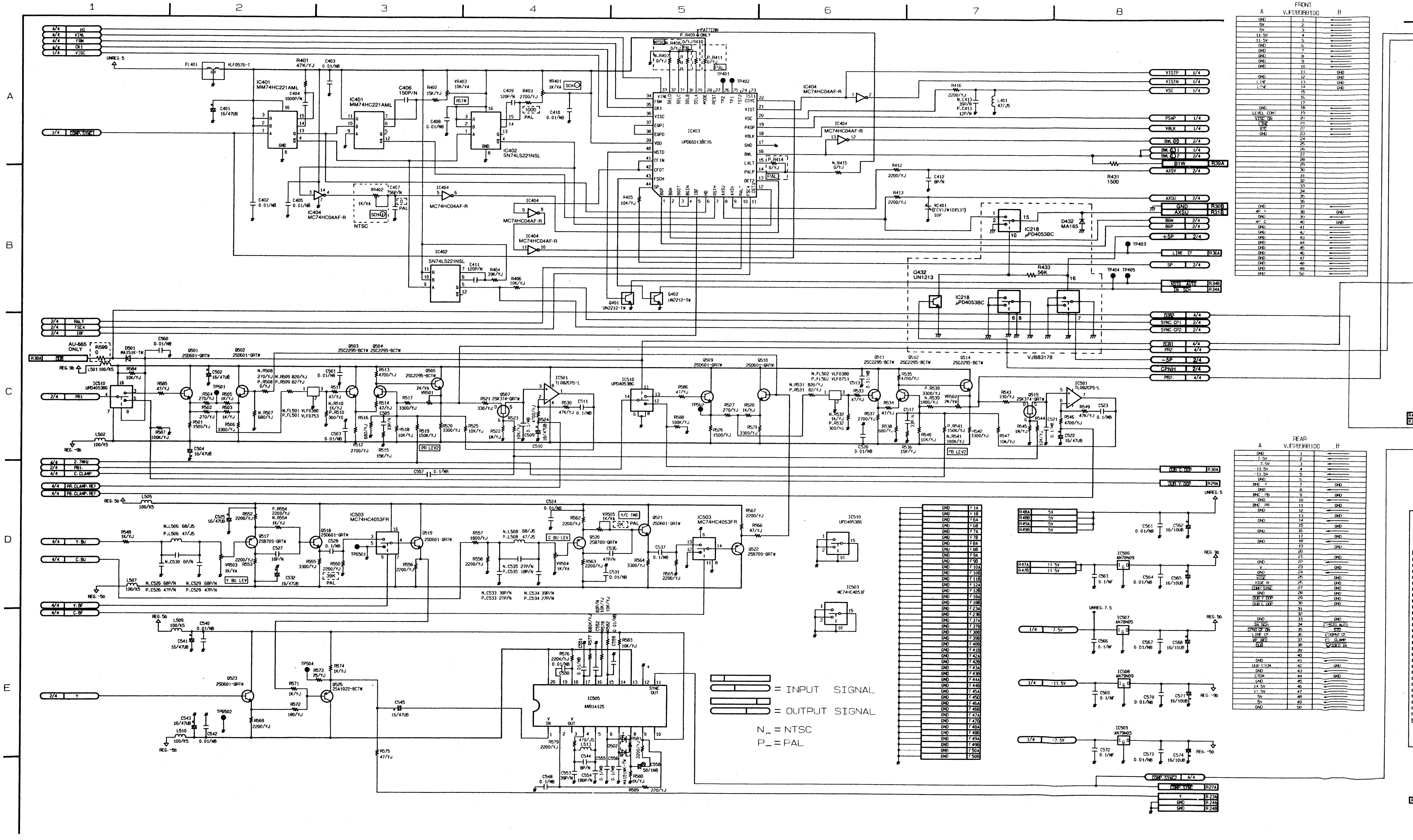

IC401 MM74HC221AML
IC402 SN74LS221NSL
IC403 UPD65013BC16
IC404 MC74HC04AF-R
IC218 μPD4053BC
IC510 UPD4053BG
IC501 TL082CPS-L
IC503 MC74HC4053FR
IC505 AN91A12S
IC506 AN78N09
IC507 AN78N05
IC508 AN79N09
IC509 AN79N05
Q401 UN2212-TW
Q402 UN2212-TW
Q432 UN1213
D432 MA165
D501 MA151K-TW
FL401 VLF0576-T
AU-665 ONLY
PATTERN ONLY
VJB83178
FRONT VJP28089B100
REAR VJP28088B100
= INPUT SIGNAL
= OUTPUT SIGNAL
N_ = NTSC
P_ = PAL

W4(DECODER) SCHEMATIC DIAGRAM 4/4(FOR AU-65H NTSC)

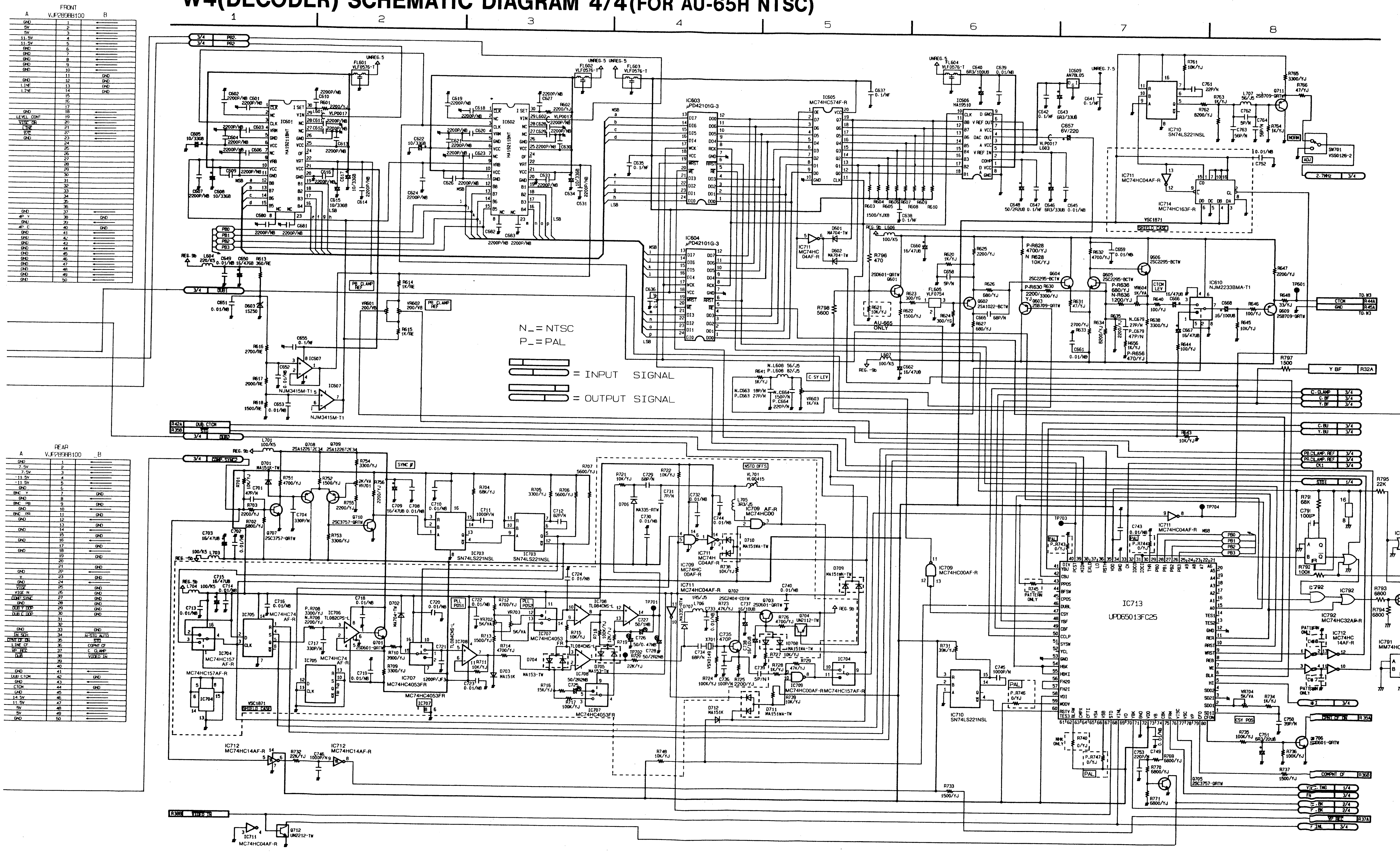

1
2
3
4
5
6
7
8
FRONT
VJP2808B100
REAR
VJP2808B100
IC601
HA11581BT
IC602
HA11581BT
IC603
µPD42101G-3
IC604
µPD42101G-3
IC605
MC74HC574F-R
IC606
HA19510
IC609
AN78L05
IC710
SN74LS221NSL
IC711
MC74HC04AF-R
IC714
MC74HC163F-R
IC610
NJM2233BMA-T1
IC607
NJM3415M-T1
IC703
SN74LS221NSL
IC704
MC74HC157AF-R
IC705
MC74HC74AF-R
IC706
TL082CPS-L
IC707
MC74HC4053FR
IC708
TL084CNS-L
IC709
MC74HC00AF-R
IC712
MC74HC14AF-R
IC713
UPD65013FC25
IC792
MC74HC32AF-R
IC791
N_= NTSC
P_= PAL
= INPUT SIGNAL
= OUTPUT SIGNAL
AU-65E ONLY
SW701
VSS0126-2
2.7MHz
Y BF
C.CLAMP
C.BF
Y.BF
C.BU
Y.BU
PB.CLAMP.REF
PR.CLAMP.REF
CK1
STD1
COMPNT CF
VIDEO IN
DUB1
DUB2
COMP.SYNC
SYNC
NSTD OFFS
SHIELD CASE
VSC1871

DECODER SCHEMATIC DIAGRAM

MODEL / TYPE	AU-65H	AU-63H	AU-62H
NTSC	SCM-10·11	Not Used	Not Used
PAL	VEP83173A	Not Used	Not Used

W4(DECODER) SCHEMATIC DIAGRAM 1/4(FOR AU-65H PAL)

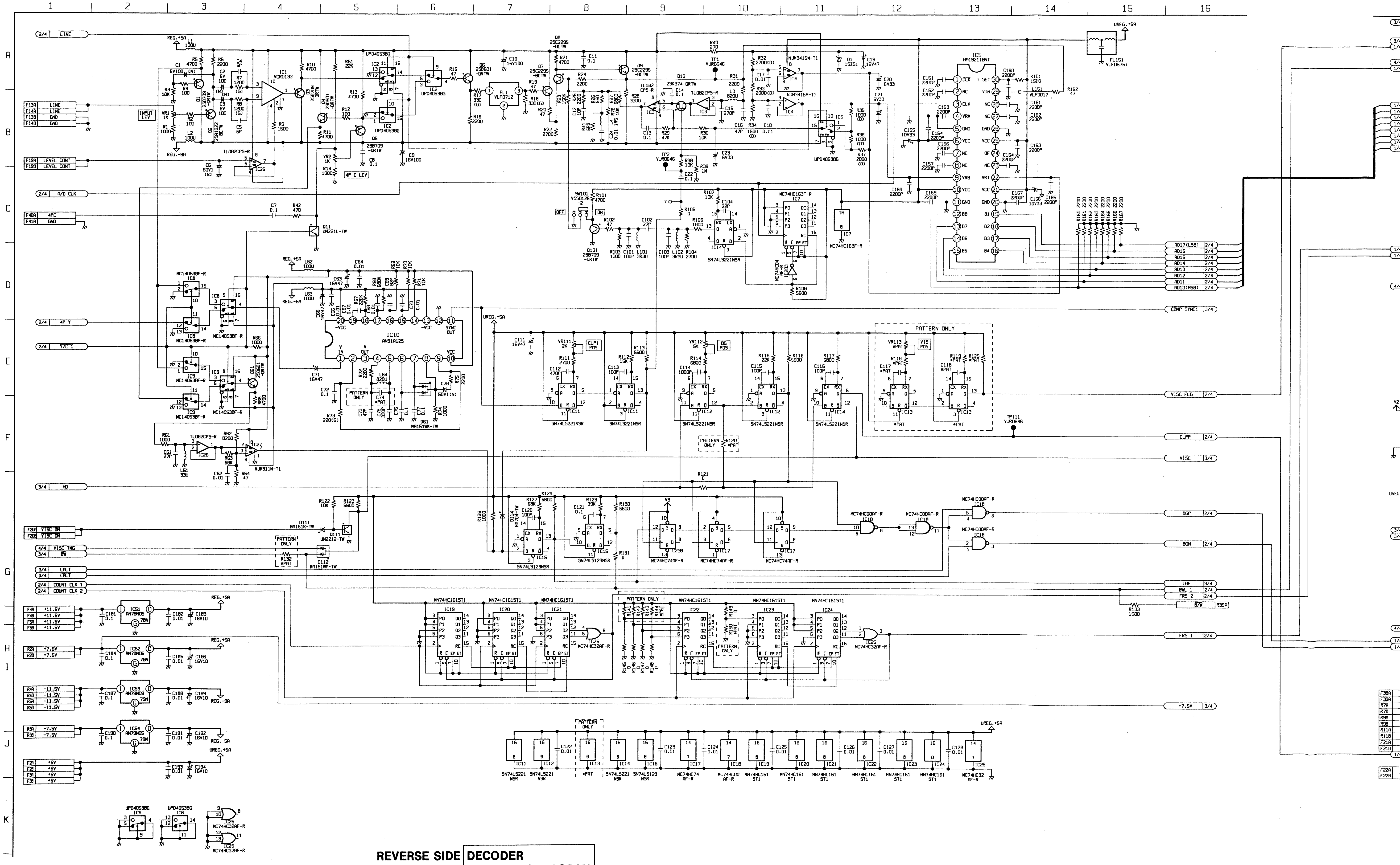

1
2
3
4
5
6
7
8
9
10
11
12
13
14
15
16
A
B
C
D
E
F
G
H
I
J
K
2/4 LINE
F13A LINE
F14A LINE
F13B GND
F14B GND
INPUT LEV
F19A LEVEL CONT
F19B LEVEL CONT
2/4 A/D CLK
F40A 4PC
F41A GND
2/4 4P Y
2/4 Y/C 1
3/4 HD
F20A VISC ON
F20B VISC ON
4/4 VISC TMG
3/4 BW
3/4 LALT
3/4 LALT
2/4 COUNT CLK 1
2/4 COUNT CLK 2
F4A +11.5V
F4B +11.5V
F5A +11.5V
F5B +11.5V
F2A +7.5V
F2B +7.5V
F6A -11.5V
F6B -11.5V
F5A -11.5V
F5B -11.5V
F3A -7.5V
F3B -7.5V
F2A +5V
F2B +5V
F3A +5V
F3B +5V
REG.+9A
REG.-9A
REG.+5A
REG.-5A
UREG.+5A
IC1 VCA0133
IC2 UPD4053BG
IC5 HA19211BNT
IC7 MC74HC163F-R
IC10 AN91A125
IC14 SN74LS221NSR
IC18 MC74HC00AF-R
IC19 MN74HC161ST1
IC20 MN74HC161ST1
IC21 MN74HC161ST1
IC22 MN74HC161ST1
IC23 MN74HC161ST1
IC24 MN74HC161ST1
IC25 MC74HC32AF-R
IC51 AN78N09
IC52 AN78N06
IC53 AN79N09
IC54 AN79N06
IC26 TL082CPS-R
IC27 NJM311M-T1
FL1 VLF0712
FL151 VLF0576T
4P C LEV
CLP1 POS
BG POS
VISC POS
PATTERN ONLY
AD17(LSB) 2/4
AD16 2/4
AD15 2/4
AD14 2/4
AD13 2/4
AD12 2/4
AD11 2/4
AD10(MSB) 2/4
COMP SYNC1 3/4
VISC FLG 2/4
CLPP 2/4
VISC 3/4
BGP 2/4
BGN 2/4
IBF 3/4
BWL 1 2/4
FRS 2 2/4
B/W R39A
FRS 1 2/4
+7.5V 3/4
TP111 VJR0646

REVERSE SIDE DECODER SCHEMATIC DIAGRAM

W4(DECODER) SCHEMATIC DIAGRAM 2/4(FOR AU-65H PAL)

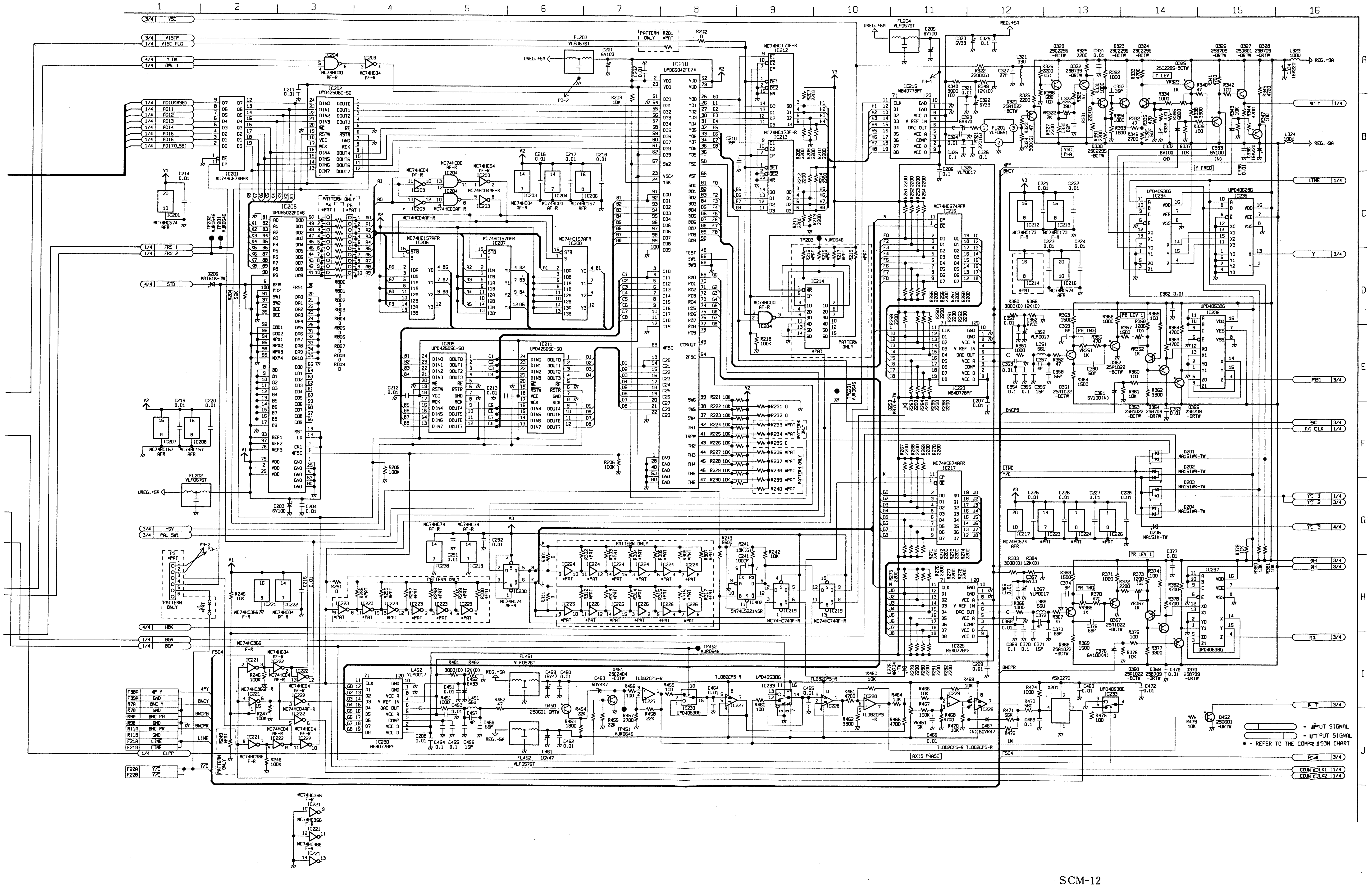
1
2
3
4
5
6
7
8
9
10
11
12
13
14
15
16
A
B
C
D
E
F
G
H
I
J
3/4 VSC
3/4 VISTP
1/4 VISC FLG
4/4 Y BK
1/4 BWL 1
1/4 AD10(MSB)
1/4 AD11
1/4 AD12
1/4 AD13
1/4 AD14
1/4 AD15
1/4 AD16
1/4 AD17(LSB)
1/4 FRS 1
1/4 FRS 2
4/4 STD
3/4 +5V
3/4 PAL SW1
4/4 HBK
1/4 BGN
1/4 BGP
1/4 CLPP
IC201 MC74HC574AFR
IC202 UPD42505C-50
IC203 MC74HC04 AF-R
IC204 MC74HC00 AF-R
IC205 UPD65022FO46
IC206 MC74HC157AFR
IC207 MC74HC157AFR
IC208 MC74HC157AFR
IC209 UPD42505C-50
IC210 UPD65042F024
IC211 UPD42505C-50
IC212 MC74HC173F-R
IC213 MC74HC173F-R
IC214 MC74HC574AFR
IC215 MB40778PF
IC216 MC74HC574AFR
IC217 MC74HC574AFR
IC219 MC74HC74AF-R
IC220 MB40778PF
IC221 MC74HC366 F-R
IC222 MC74HC04 AF-R
IC223
IC224
IC225 MB40778PF
IC226
IC227 TL082CPS-R
IC228 TL082CPS-R
IC229 TL082CPS-R
IC230 MB40778PF
IC233 UPD4053BG
IC234 UPD4053BG
IC235 UPD4052BG
IC236 UPD4053BG
IC237 UPD4053BG
IC238 MC74HC74 AF-R
IC402 SN74LS221NSR
FL201 VLF0691
FL202 VLF0576T
FL203 VLF0576T
FL204 VLF0576T
FL451 VLF0576T
FL452 VLF0576T
PATTERN ONLY
UREG.+5A
REG.+5A
REG.-5A
REG.+9A
REG.-9A
4P Y 1/4
CTNE 1/4
Y 3/4
PB1 3/4
FSC 3/4
A/I CLK 1/4
YC 1 1/4
YC 2 3/4
YC 3 4/4
9H 3/4
9H 3/4
R1 3/4
R.T 3/4
FC4 3/4
COUNT CLK1 1/4
COUNT CLK2 1/4
Y LEV
Y FREQ
PB LEV 1
PB TMG
PR LEV 1
PR TMG
VSC PHA
AXIS PHASE
F38A 4P Y
F39A GND
R7A BNC Y
R7B GND
R9A BNC PB
R9B GND
R11A BNC PR
R11B GND
F21A CTNE
F21B CTNE
F22A Y/C
F22B Y/C
P3-1
P3-2
X201 VSX0270
= INPUT SIGNAL
= OUTPUT SIGNAL
* = REFER TO THE COMPARISON CHART

MODEL / TYPE	AU-65H	AU-63H	AU-62H
NTSC	SCM-10·11	Not Used	Not Used
PAL	VEP83173A	Not Used	Not Used

W4(DECODER) SCHEMATIC DIAGRAM 3/4(FOR AU-65H PAL)

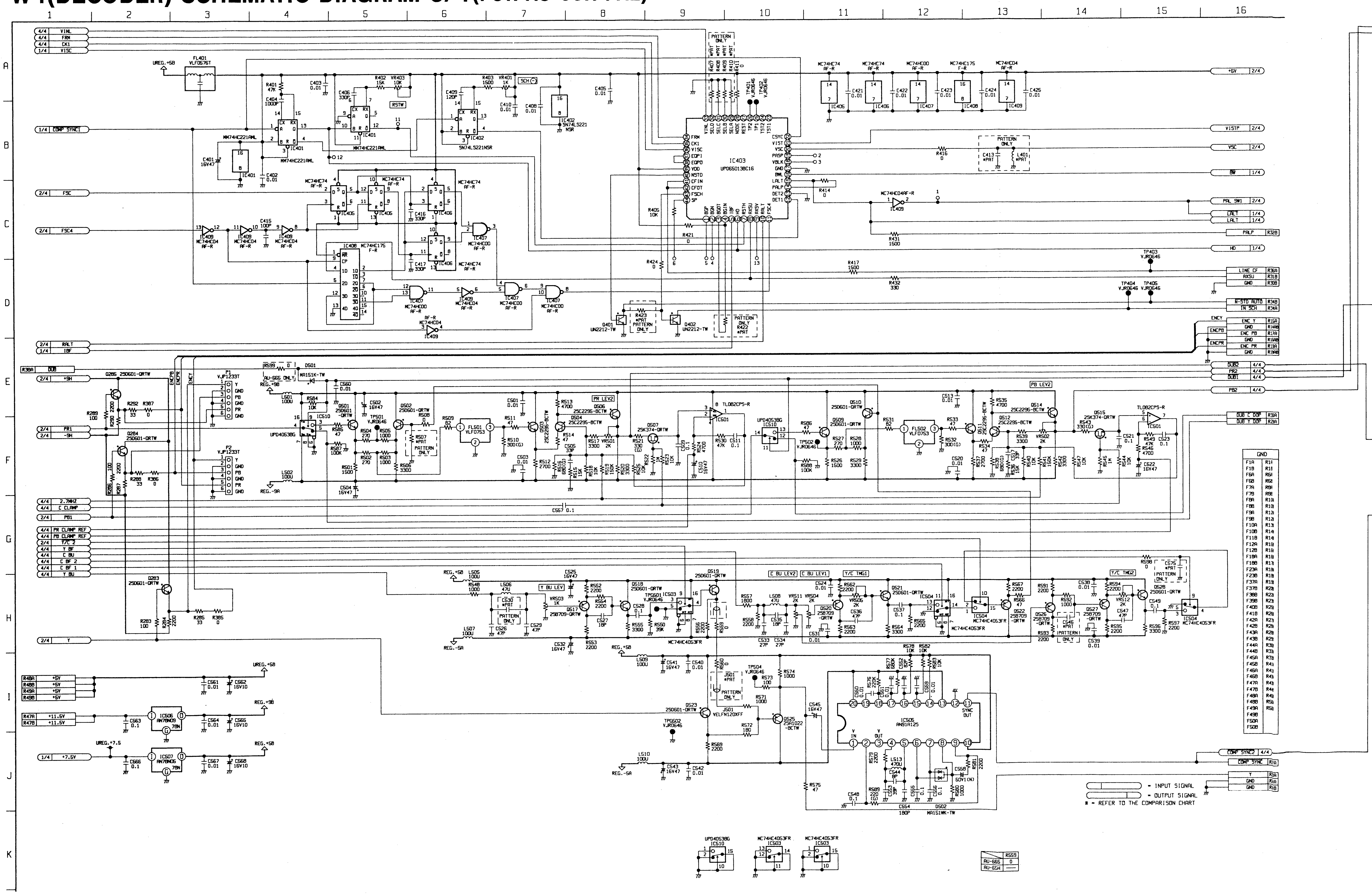

1
2
3
4
5
6
7
8
9
10
11
12
13
14
15
16
A
B
C
D
E
F
G
H
I
J
K
VINL
FRM
CK1
VISC
COMP SYNC1
FSC
FSC4
RALT
IBF
DUB
+9H
PR1
-9H
2.7MHZ
C CLAMP
PB1
PR CLAMP REF
PB CLAMP REF
Y/C 2
Y BF
C BU
C BF 2
C BF 1
Y BU
Y
+5V
+11.5V
+7.5V
UREG.+5B
FL401 VLF0576T
IC401 MM74HC221AML
IC402 SN74LS221NSR
IC403 UPD6501380C16
IC405 MC74HC74 AF-R
IC406 MC74HC74 AF-R
IC407 MC74HC00 AF-R
IC408 MC74HC175 F-R
IC409 MC74HC04 AF-R
PATTERN ONLY
Q401 UN2212-TW
Q402 UN2212-TW
+5V
VISTP
VSC
BW
PAL SW1
LALT
HD
PALP
LINE CF
RXSU
GND
N-STD AUTO
IN SCH
ENC Y
ENC PB
ENC PR
DUB2
PR2
DUB1
PB2
DUB C DOP
DUB Y DOP
P1 VJP1233T
P2 VJP1233T
Q285 2SD601-QRTW
Q284 2SD601-QRTW
Q283 2SD601-QRTW
D501 MA151K-TW
AU-66S ONLY
IC510 UPD4053BG
FL501 VLF0753
FL502 VLF0753
IC501 TL082CPS-R
PR LEV2
PB LEV2
Y BU LEV
C BU LEV2
C BU LEV1
Y/C TMG1
Y/C TMG2
IC503 MC74HC4053FR
IC504 MC74HC4053FR
IC505 AN91A125
IC506 AN78M09
IC507 AN78M06
J501 VELFN120XFF
D502 MA151WK-TW
SYNC OUT
Y IN
Y OUT
COMP SYNC2
COMP SYNC
REG.+9B
REG.-9A
REG.+5B
REG.-5A
UREG.+7.5
= INPUT SIGNAL
= OUTPUT SIGNAL
* = REFER TO THE COMPARISON CHART
R559
AU-66S 0
AU-65H —

W4(DECODER) SCHEMATIC DIAGRAM 4/4(FOR AU-65H PAL)

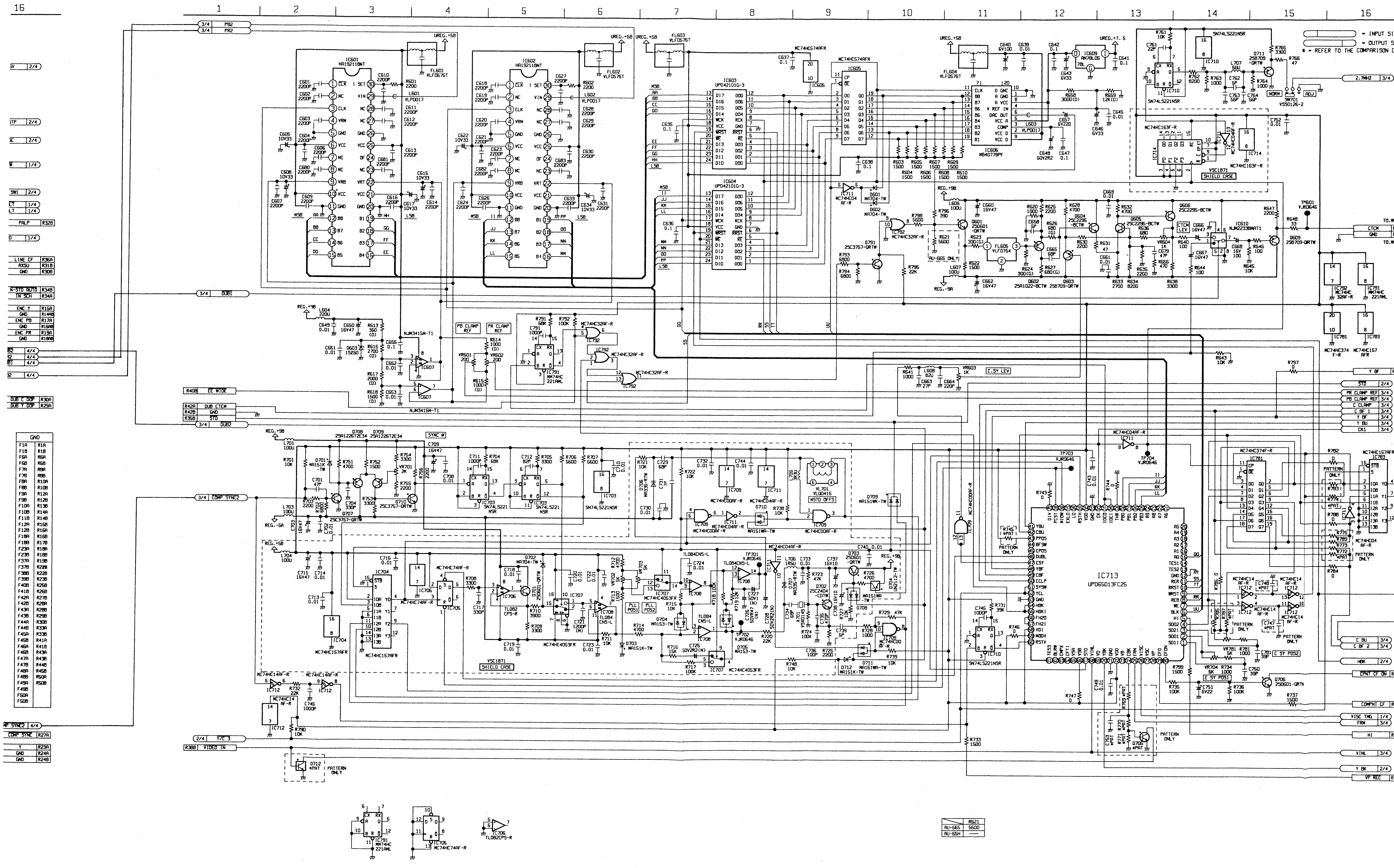

16
1
2
3
4
5
6
7
8
9
10
11
12
13
14
15
16
= INPUT SI
= OUTPUT S
* = REFER TO THE COMPARISON C
IC601 HA19211BNT
IC602 HA19211BNT
FL601 VLF0576T
FL602 VLF0576T
FL603 VLF0576T
FL604 VLF0576T
UREG.+5B
UREG.+7.5
IC603 UPD42101G-3
IC604 UPD42101G-3
IC605 MC74HC574AFR
IC606 MB40778PF
IC609 AN78L05
IC610 NJM2233BNAT1
IC710 SN74LS221NSR
IC714 MC74HC163F-R
VSC1871 SHIELD CASE
SW701 YSS0126-2
NORM
ADJ
2.7MHZ 3/4
CTCM
GND
IC781 MC74HC374 F-R
IC783 MC74HC157 AFR
IC792 MC74HC32AF-R
IC791 MM74HC221AML
IC607 NJM3415M-T1
PB CLAMP REF
PR CLAMP REF
C.SY LEV
3/4 PB2
3/4 PR2
3/4 DUB1
3/4 DUB2
3/4 COMP SYNC2
2/4 Y/C 3
R38B VIDEO IN
R40B EE WIDE
R42A DUB CTCM
R42B GND
R35B STD
DUB C DOF R30A
DUB Y DOF R29A
IC703 SN74LS221 NSR
IC704 MC74HC157AFR
IC705 MC74HC74AF-R
IC706 TL082CPS-R
IC707 MC74HC4053FR
IC708 TL084CN5-L
IC709 MC74HC00AF-R
IC711 MC74HC04AF-R
IC712 MC74HC14AF-R
IC713 UPD65013FC25
SYNC W
PLL POS1
PLL POS2
VL701 VLQ0415
NSTD OFFS
PATTERN ONLY
SHIELD CASE
C SY POS1
C SY POS2
Y BF
STD 2/4
MR CLAMP REF 3/4
PB CLAMP REF 3/4
C CLAMP 3/4
C BF 1 3/4
Y BF 3/4
Y BU 3/4
CK1 3/4
C BU 3/4
C BF 2 3/4
HBK 2/4
CPNT CF ON
COMPNT CF
VISC TMG 1/4
FRM 3/4
HI
VINL 3/4
Y BK 2/4
VP REC
R621
AU-66S 5600
AU-65H —

TYPE \ MODEL	AU-65H	AU-63H	AU-62H
NTSC	VEP83170A	Not Used	Not Used
PAL	VEP83170B	Not Used	Not Used

SENC & P IN P SCHEMATIC DIAGRAM 1/2(FOR AU-65H)

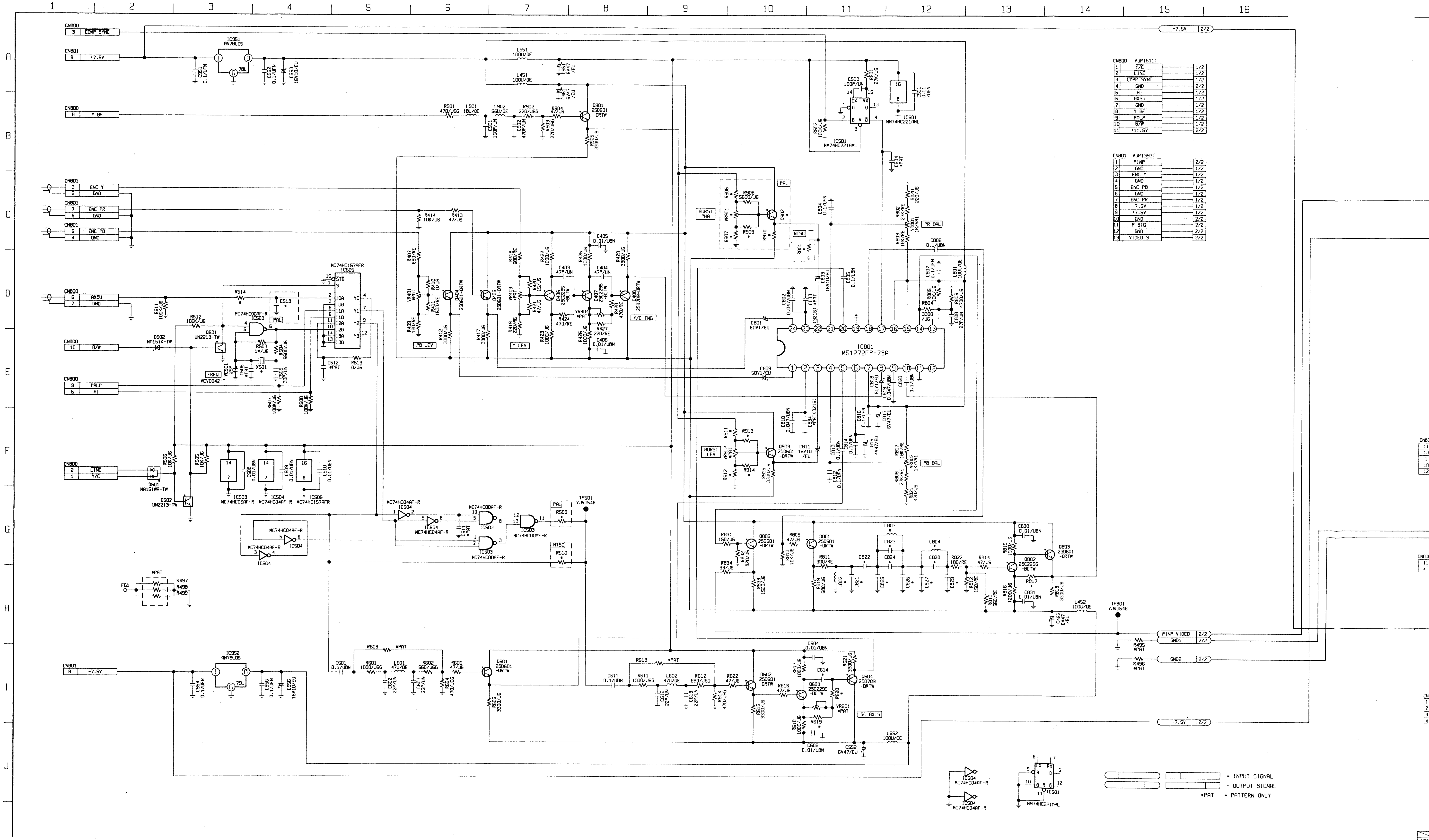
1
2
3
4
5
6
7
8
9
10
11
12
13
14
15
16
A
B
C
D
E
F
G
H
I
J
CN800 3 COMP SYNC
CN801 9 +7.5V
IC951 AN78L05
CN800 8 Y BF
CN801 3 ENC Y 2 GND
CN801 7 ENC PR 6 GND
CN801 5 ENC PB 4 GND
CN800 6 AXSU 7 GND
CN800 10 B/W
CN800 9 PALP 5 HI
CN800 2 LINE 1 Y/C
CN801 8 -7.5V
IC952 AN79L05
MC74HC157AFR IC505
MC74HC00AF-R IC503
MC74HC04AF-R IC504
IC501 MM74HC221AML
IC801 M51272FP-73A
Q901 2SD601 -QRTW
Q801 2SD601 -QRTW
Q802 2SC2295 -BCTW
Q803 2SD601 -QRTW
Q805 2SD601 -QRTW
Q903 2SD601 -QRTW
Q601 2SD601 -QRTW
Q602 2SD601 -QRTW
Q603 2SC2295 -BCTW
Q604 2SB709 -QRTW
Q501 UN2213-TW
Q502 UN2213-TW
D501 MA151WA-TW
D502 MA151K-TW
PB LEV
Y LEV
Y/C TMG
PR BAL
PB BAL
BURST PHA
BURST LEV
FREQ
PAL
NTSC
SC AXIS
TPS01 VJR0548
TP801 VJR0548
FG1
PINP VIDEO 2/2
GND1 2/2
GND2 2/2
+7.5V 2/2
-7.5V 2/2
CN800 VJP1511T
1 Y/C 1/2
2 LINE 1/2
3 COMP SYNC 1/2
4 GND 2/2
5 HI 1/2
6 AXSU 1/2
7 GND 1/2
8 Y BF 1/2
9 PALP 1/2
10 B/W 1/2
11 +11.5V 2/2
CN801 VJP1393T
1 PINP 2/2
2 GND 1/2
3 ENC Y 1/2
4 GND 1/2
5 ENC PB 1/2
6 GND 1/2
7 ENC PR 1/2
8 -7.5V 1/2
9 +7.5V 1/2
10 GND 2/2
11 P SIG 2/2
12 GND 2/2
13 VIDEO 3 2/2
= INPUT SIGNAL
= OUTPUT SIGNAL
*PAT = PATTERN ONLY

REVERSE SIDE **DECODER SCHEMATIC DIAGRAM**

SENC & P IN P SCHEMATIC DIAGRAM 2/2(FOR AU-65H)

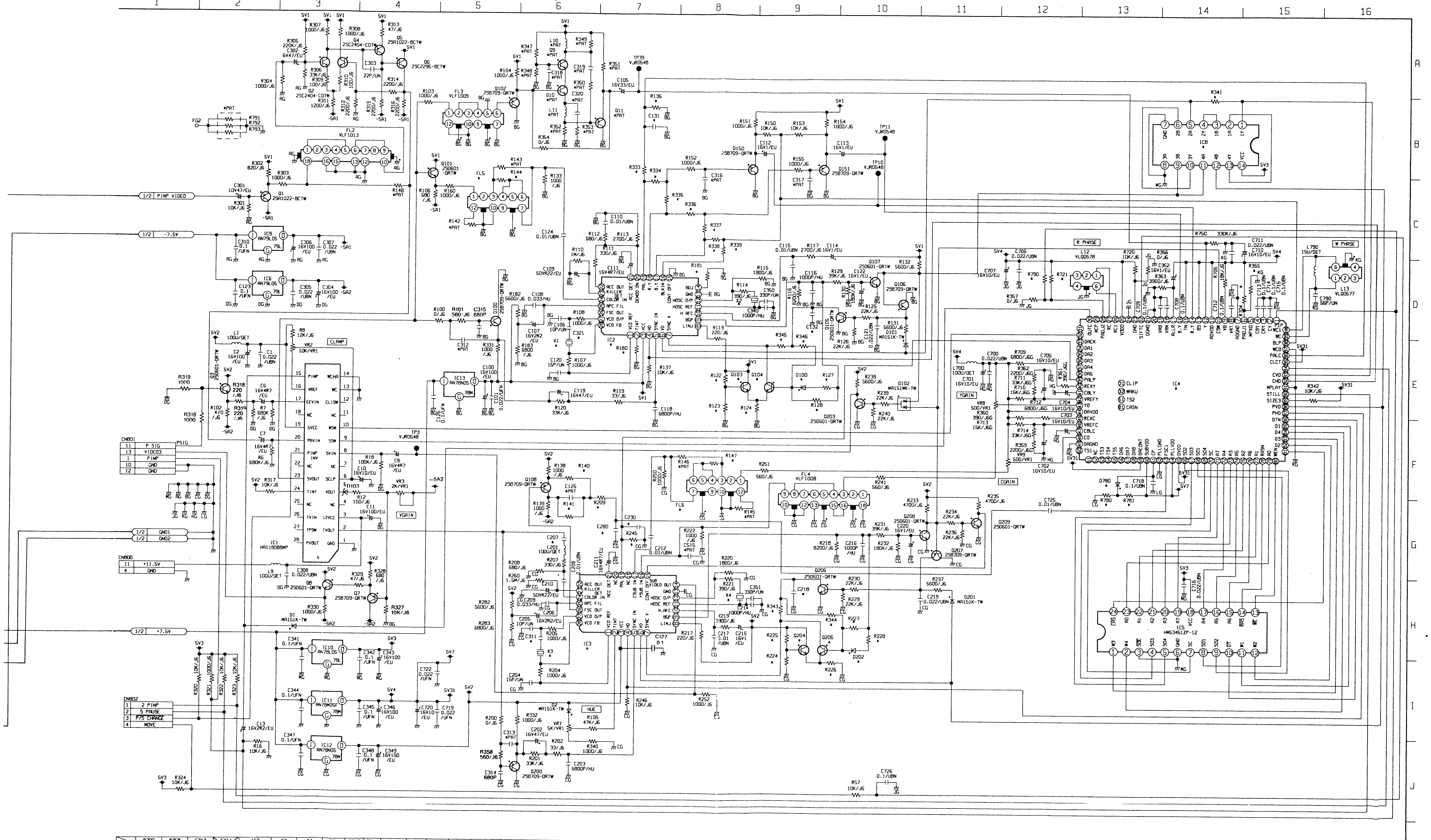
1/2 PINP VIDEO
1/2 -7.5V
1/2 GND1
1/2 GND2
1/2 +7.5V
CN801
CN800
CN802
IC1 HA118088MP
IC2
IC3
IC4
IC5 HM53461ZP-12
IC8
R PHASE
W PHASE
CLAMP
VGAIN
YGAIN
CGAIN
HUE

	R200	R358	C313	C314	IC3	X3	X4	C311	R343	R344	R224	R225	R226	R227	R228	Q204	Q205	D202	C218	IC4	R245	C230	R781	R180	R181	R355	R144	FLS	R147	R147	FL6
NTSC	0/J6	0/J6	—	—	HA11525MP	VSX0543	VSX0330	220P/UN	—	0/J6	6800/J6	10K/J6	1800/J6	470K/J6	82K/J6	2SD601-QRTW	2SD601-QRTW	MA151K-TW	100P/UN	HD49409FS	—	—	10K/J6	—	—	—	0/J6	VLF1010	0/J6	—	VLF1010
PAL	0/J6	0/J6	—	—	HA11535MP	VSX0544	VSX0542	150P/UN	0/J6	—	—	—	—	—	—	—	—	—	1500P/HU	HD49410FS	22K/J6	270P/UN	— —	120K/J6	120/J6	0/J6	0/J6	VLF1011	0/J6	0/J6	VLF1011

	IC2	R122	R123	Q103	Q104	R124	R127	R128	D100	C132	X1	X2	C321	R345	R346	R136	C131	C207	R333	R335	R337	R338	R339	IC8	R341	R790	R721	R704	R140	R141	R209	C280	R334	R336	C125
NTSC	HA11532MP	10K/J6	6800/J6	2SD601-QRTW	2SD601-QRTW	1800/J6	82K/J6	470K/J6	MA151K-TW	100P/UN	VSX0543	VSX0330	150P/UN	—	0/J6	0/J6	—	18P/UN	—	—	—	0/J6	—	—	0/J6	10K/J6	—	—	680/F6	—	0/J6	—	0/J6	0/J6	100P/F6
PAL	HA11567MP	—	—	—	—	—	—	—	—	1500P/HU	VSX0544	VSX0542	120P/UN	0/J6	—	22K/J6	270P/UN	10P/UN	0/J6	—	0/J6	—	0/J6	MC74HC02AF-R	—	—	10K/J6	10K/J6	0/J6	—	1000/J6	68P/UN	—	—	18P/F6

	R100	R101	C312	C315	D780	R780
NTSC	0/J6	0/J6	—	—	MA151K-TW	10K/J6
PAL	0/J6	0/J6	—	—	—	—

	C316	C317	R348	R347	R349	R351	R350	R352	R353	C318	C319	C320	Q9	Q10	Q11	C515	L10	L11	R148	C125	R145	R146	R142	R143
PATTERN	—	—	10K/J6	3900/J6	3300/J6	1000/J6	470/J6	220/J6	220/J6	0.1/UFN	0.01/UBN	1000P/UBN	2SD601-QRTW	2SD601-QRTW	2SB790-QRTW	0.022/UBN	150U/QE	22U/QE	—	47P/UN	0/J6	0/J6	0/J6	0/J6

MODEL TYPE	AU-65H	AU-63H	AU-62H
NTSC	VEP84095J	VEP84095C	VEP84095C
PAL	VEP84095K	VEP84095E	VEP84095E

W6(AUDIO) SCHEMATIC DIAGRAM 1/4 (LINEAR AUDIO)

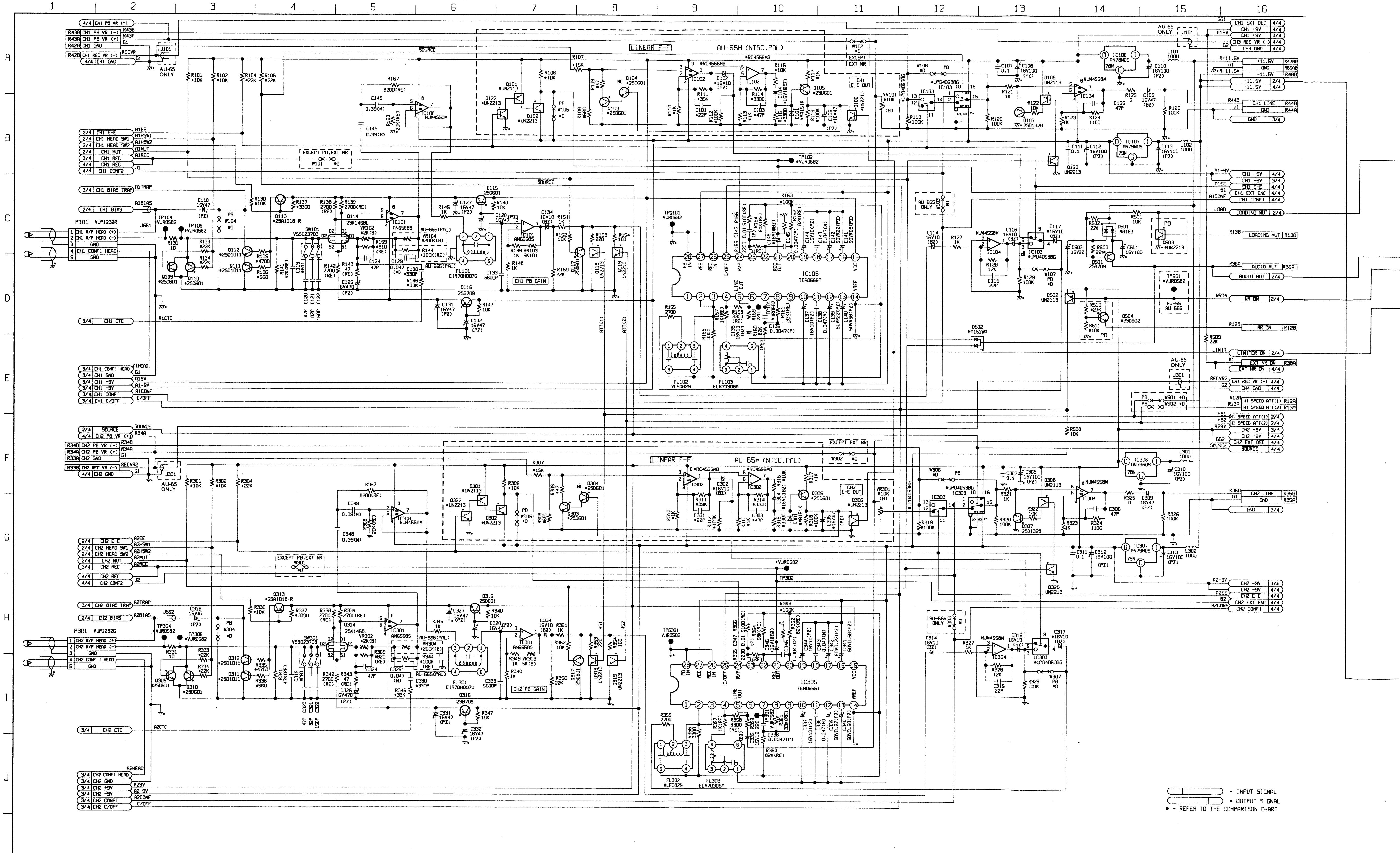

1
2
3
4
5
6
7
8
9
10
11
12
13
14
15
16
A
B
C
D
E
F
G
H
I
J
LINEAR E-E
AU-65H (NTSC,PAL)
SOURCE
EXCEPT PB,EXT NR
EXCEPT EXT NR
CH1 E-E OUT
CH2 E-E OUT
CH1 PB GAIN
CH2 PB GAIN
AU-65 ONLY
AU-66S ONLY
P101 VJP1232R
P301 VJP1232G
IC101 AN6558S
IC301 AN6558S
IC102 RC4556MB
IC302 RC4556MB
IC103 UPD4053BG
IC303 UPD4053BG
IC104 NJM4558M
IC304 NJM4558M
IC105 TEA0666T
IC305 TEA0666T
IC106 AN78N09
IC107 AN79N09
IC306 AN78N09
IC307 AN79N09
IC108 NJM4558M
IC308 NJM4558M
FL101 EIR7OH0070
FL301 EIR7OH0070
FL102 VLF0829
FL302 VLF0829
FL103 ELM70306A
FL303 ELM70306A
SW101 VSS023703
SW301 VSS023703
TP101 VJR0582
TP102 VJR0582
TP302 VJR0582
TPG101 VJR0582
TPG301 VJR0582
TP501 VJR0582

═══ - INPUT SIGNAL

═══ - OUTPUT SIGNAL

* - REFER TO THE COMPARISON CHART

W6(AUDIO) SCHEMATIC DIAGRAM 2/4 (REC, TC)

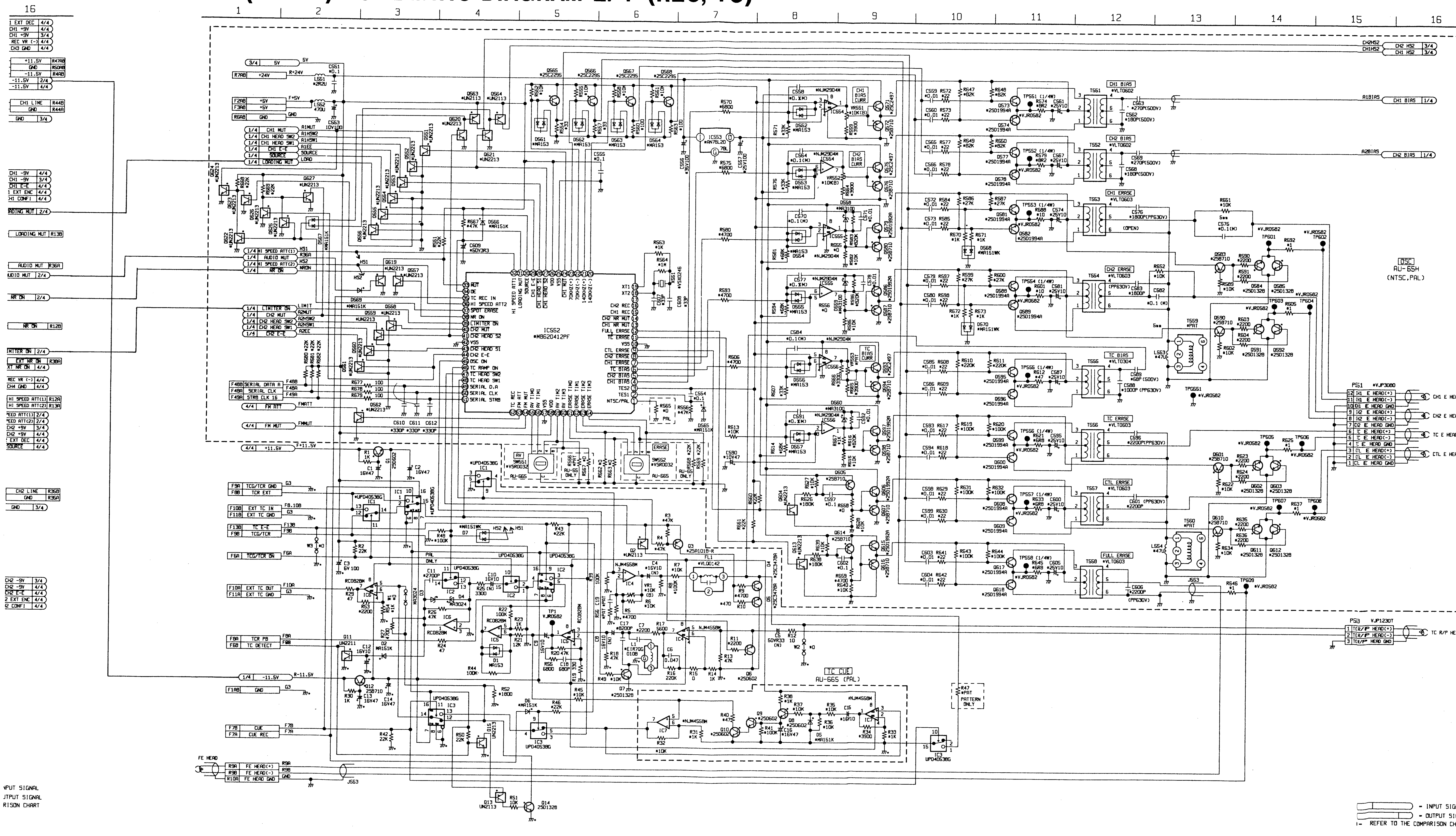

ICS52
*M8620412PF
AU-65H
(NTSC,PAL)
TC CUE
AU-665 (PAL)
CH1 BIAS
CH2 BIAS
CH1 ERASE
CH2 ERASE
TC BIAS
TC ERASE
CTL ERASE
FULL ERASE
TS51
TS52
TS53
TS54
TS55
TS56
TS57
TS58
PS51
*VJP3080
PS13
VJP1230T
FE HEAD
CH1 E HEAD
CH2 E HEAD
TC E HEAD
CTL E HEAD
TC R/P HEAD
NPUT SIGNAL
JTPUT SIGNAL
RISON CHART
- INPUT SIG
- OUTPUT SI
REFER TO THE COMPARISON CH

AUDIO
SCHEMATIC DIAGRAM

TYPE \ MODEL	AU-65H	AU-63H	AU-62H
NTSC	VEP84095J	VEP84095C	VEP84095C
PAL	VEP84095K	VEP84095E	VEP84095E

W6(AUDIO) SCHEMATIC DIAGRAM 3/4 (CTL REC)

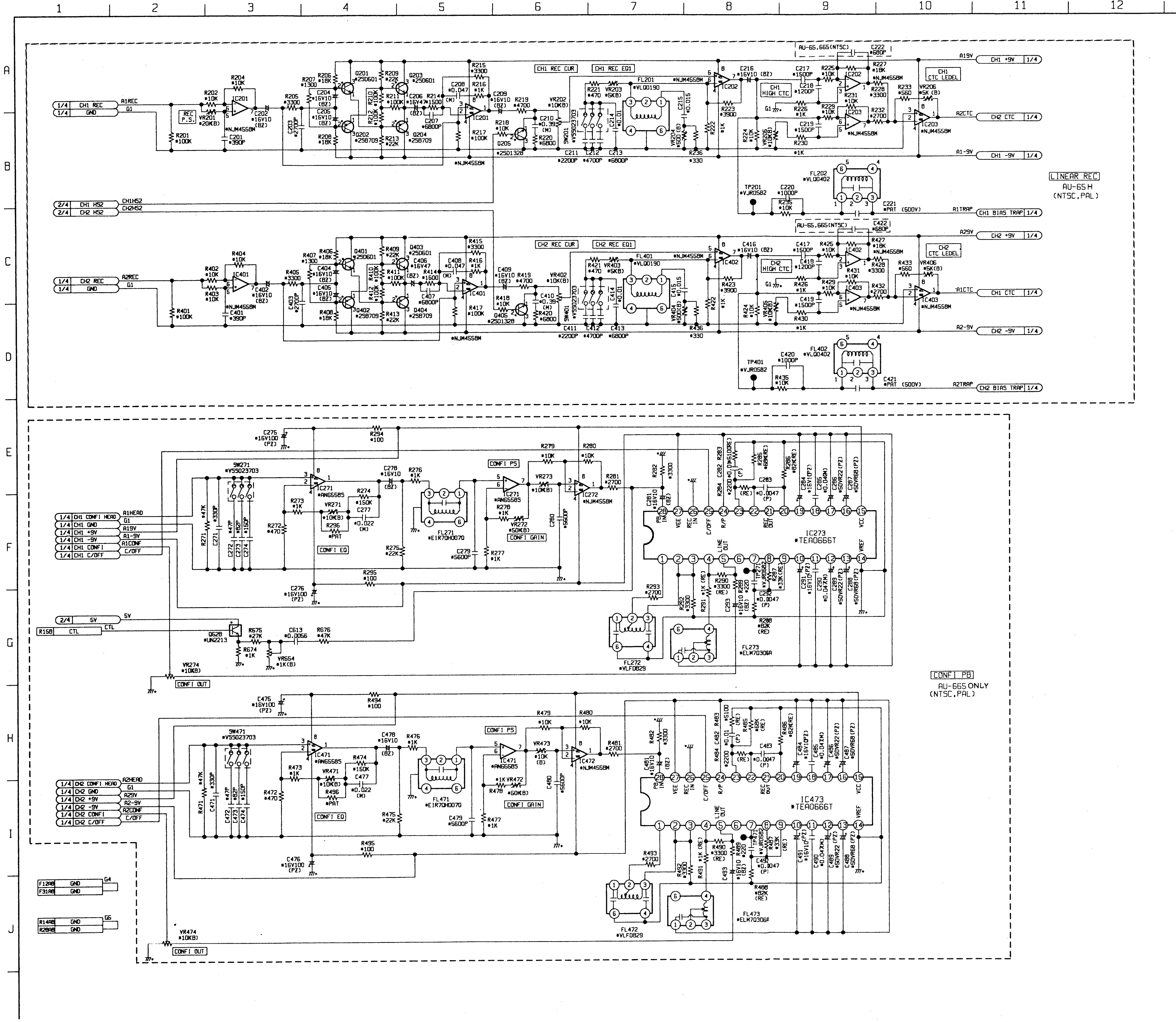

1
2
3
4
5
6
7
8
9
10
11
12
A
B
C
D
E
F
G
H
I
J
1/4 CH1 REC
1/4 GND
A1REC
G1
REC P.S.
VR201 *20K(B)
IC201
*NJM4558M
CH1 REC CUR
CH1 REC EQ1
FL201 *VLQ0190
IC202
CH1 HIGH CTC
AU-65,66S(NTSC)
CH1 CTC LEDEL
A1 9V
CH1 +9V 1/4
A2CTC
CH2 CTC 1/4
A1-9V
CH1 -9V 1/4
FL202 *VLQ0402
TP201 *VJR0582
CH1 BIAS TRAP 1/4
LINEAR REC
AU-65H
(NTSC,PAL)
2/4 CH1 HS2
2/4 CH2 HS2
CH1HS2
CH2HS2
1/4 CH2 REC
1/4 GND
A2REC
IC401
CH2 REC CUR
CH2 REC EQ1
FL401 *VLQ0190
IC402
CH2 HIGH CTC
CH2 CTC LEDEL
A2 9V
CH2 +9V 1/4
A1CTC
CH1 CTC 1/4
A2-9V
CH2 -9V 1/4
FL402 *VLQ0402
TP401 *VJR0582
CH2 BIAS TRAP 1/4
1/4 CH1 CONF1 HEAD
1/4 CH1 GND
1/4 CH1 +9V
1/4 CH1 -9V
1/4 CH1 CONF1
1/4 CH1 C/OFF
A1HEAD
A19V
A1-9V
A1CONF
C/OFF
SW271 *VSS023703
IC271 *AN6558S
CONF1 EQ
FL271 *E1R70H0070
CONF1 PS
IC272 *NJM4558M
CONF1 GAIN
IC273 *TEA0666T
FL272 *VLF0829
FL273 *ELM70306A
2/4 5V
R158 CTL
Q628 *UN2213
VR274 *10K(B)
CONF1 OUT
CONF1 PB
AU-66S ONLY
(NTSC,PAL)
1/4 CH2 CONF1 HEAD
1/4 CH2 GND
1/4 CH2 +9V
1/4 CH2 -9V
1/4 CH2 CONF1
1/4 CH2 C/OFF
A2HEAD
A29V
A2-9V
A2CONF
SW471 *VSS023703
IC471 *AN6558S
CONF1 EQ
FL471 *E1R70H0070
CONF1 PS
IC472 *NJM4558M
CONF1 GAIN
IC473 *TEA0666T
FL472 *VLF0829
FL473 *ELM70306F
F12AB GND
F31AB GND
G4
R14AB GND
R28AB GND
G5
VR474 *10K(B)
CONF1 OUT

FRONT

W6F

			A	No	B			
2/4	GND	G3	GND	1	GND	G3	GND	2/4
2/4	+5V	F+5V	+5V	2	————	F+5V	+5V	2/4
2/4	+5V	F+5V	+5V	3	————	F+5V	+5V	2/4
4/4	+11.5V	F+11.5V	+11.5V	4	————	F+11.5V	+11.5V	4/4
4/4	+11.5V	F+11.5V	+11.5V	5	————	F+11.5V	+11.5V	4/4
2/4	TCG/TCR ON	F6A	TCG/TCR ON	6	TC DETECT	F6B	TC DETECT	2/4
2/4	CUE REC	F7A	CUE REC	7	CUE	F7B	CUE	2/4
2/4	TCR PB	F8A	TCR PB	8	TCR EXT	F8.10B	TCR EXT	2/4
2/4	TCG/TCR GND	G3	TCG/TCR GND	9	TCG/TCR	F9B	TCG/TCR	2/4
2/4	EXT TC OUT	F10A	EXT TC OUT	10	EXT TC IN	F8.10B	EXT TC IN	2/4
2/4	EXT TC GND	G3	EXT TC GND	11	EXT TC GND	G3	EXT TC GND	2/4
3/4	GND	G4	GND	12	GND	G4	GND	3/4
				13	TC E-E	F13B	TC E-E	2/4
				14				
				15				
				16				
				17				
				18				
				19				
				20				
				21				
				22				
				23				
				24				
				25				
				26				
				27				
				28				
				29				
4/4	SEARCH	SEARCH	SEARCH	30	TAPE N.FORMAT	TAPEN.	TAPE N.FORMAT	4/4
3/4	GND	G4	GND	31	————	G4	GND	3/4
4/4	FM MUT	F32A	FM MUT	32	FM ATT	F32B	FM ATT	4/4
	GND	G2	GND	33	————	G2	GND	
1/4	CH3 GND	G2	CH3 GND	34	CH3 REC VR (-)	RECVR	CH3 REC VR (-)	4/4
4/4	CH3 PB VR (+)	F35A	CH3 PB VR (+)	35	CH3 PB VR (-)	F35B	CH3 PB VR (-)	4/4
4/4	CH3 GND	G2	CH3 GND	36	CH3 LINE	F36B	CH3 LINE	4/4
	GND	G2	GND	37	————	G2		
1/4	CH3 GND	G2	CH3 GND	38	CH4 REC VR (-)	RECVR2	CH4 REC VR (-)	4/4
4/4	CH4 PB VR (+)	F39A	CH4 PB VR (+)	39	CH4 PB VR (-)	F39B	CH4 PB VR (-)	4/4
4/4	CH4 GND	G2	CH4 GND	40	CH4 LINE	F40B	CH4 LINE	4/4
	GND	G2	GND	41	————	G2	GND	
	GND	G2	GND	42	FM AUDIO	F42B	FM AUDIO	4/4
	GND	G2	GND	43	FM AUDIO GND	G2	FM AUDIO GND	4/4
	C DOP	CDOP	C DOP	44	C RF	F44B	C RF	4/4
4/4	C DOP GND	G2	C DOP GND	45	C RF GND	G2	C RF GND	4/4
4/4	REC RELAY	F46A	REC RELAY	46	E-E	F46B	E-E	4/4
4/4	C HEAD SW GND	G2	C HEAD SW GND	47	C HEAD SW	F47B	C HEAD SW	4/4
2/4	SERIAL CLK	F48A	SERIAL CLK	48	SERIAL DATA A	F48B	SERIAL DATA A	2/4
2/4	STRB CLK 16	F49A	STRB CLK 16	49				
4/4	GND	G2	GND	50	————	G2	GND	4/4

REAR

W6R

			A	No	B			
	GND	GND	GND	1	————	GND	GND	
				2				
				3				
1/4	-11.5V	R-11.5V	-11.5V	4	————	R-11.5V	-11.5V	1/4
	-14.5V	R5AB	-14.5V	5	————	R5AB	-14.5V	
2/4	GND	GND	GND	6	————	GND	GND	2/4
2/4	+24V	R+24V	+24V	7	————	R+24V	+24V	2/4
	GND	GND	GND	8	————	GND	GND	
2/4	FE HEAD (+)	R9A	FE HEAD (+)	9	FE HEAD (-)	R9B	FE HEAD (-)	2/4
2/4	FE HEAD GND	GND	FE HEAD GND	10	GND	GND	GND	
	GND	GND	GND	11	————	GND	GND	
1/4	HI SPEED ATT(1)	R12A	HI SPEED ATT(1)	12	NR ON	R12B	NR ON	1/4
1/4	HI SPEED ATT(2)	R13A	HI SPEED ATT(2)	13	LOADING MUT	R13B	LOADING MUT	1/4
3/4	GND	G5	GND	14	GND	G5	GND	3/4
				15	CTL	CTL	CTL	3/4
				16				
				17				
				18				
				19				
				20				
				21				
				22				
				23				
				24				
				25				
				26				
				27				
3/4	GND	G5	GND	28	GND	G5	GND	3/4
4/4	CH2 GND	G1	CH2 GND	29	CH2 DECODE IN	R29B	CH2 DECODE IN	4/4
4/4	CH2 GND	G1	CH2 GND	30	CH2 DECODE OUT	R30B	CH2 DECODE OUT	4/4
4/4	CH2 GND	G1	CH2 GND	31	CH2 ENCODE IN	R31B	CH2 ENCODE IN	4/4
4/4	CH2 GND	G1	CH2 GND	32	CH2 ENCODE OUT	R32B	CH2 ENCODE OUT	4/4
1/4	CH2 GND	G1	CH2 GND	33	CH2 REC VR (-)	RECVR2	CH2 REC VR (-)	1/4
1/4	CH2 PB VR (+)	R34A	CH2 PB VR (+)	34	CH2 PB VR (-)	R34B	CH2 PB VR (-)	1/4
1/4	GND	G1	GND	35	CH2 LINE	R35B	CH2 LINE	1/4
1/4	AUDIO MUT	R36A	AUDIO MUT	36	CH2 E-E	R36B	CH2 E-E	4/4
4/4	EXT NR OUT	R37A	EXT NR OUT	37	CH1 E-E	R37B	CH1 E-E	4/4
1/4	EXT NR ON	K1	EXT NR ON	38	CH1 DECODE IN	R38B	CH1 DECODE IN	4/4
4/4	CH1 GND	G1	CH1 GND	39	CH1 DECODE OUT	R39B	CH1 DECODE OUT	4/4
4/4	CH1 GND	G1	CH1 GND	40	CH1 ENCODE IN	R40B	CH1 ENCODE IN	4/4
4/4	CH1 GND	G1	CH1 GND	41	CH1 ENCODE OUT	R41B	CH1 ENCODE OUT	4/4
1/4	CH1 GND	G1	CH1 GND	42	CH1 REC VR (-)	RECVR	CH1 REC VR (-)	1/4
1/4	CH1 PB VR (+)	R43A	CH1 PB VR (+)	43	CH1 PB VR (-)	R43B	CH1 PB VR (-)	1/4
1/4	GND	G1	GND	44	CH1 LINE	R44B	CH1 LINE	1/4
	GND	G1	GND	45	————	G1	GND	
4/4	+14.5V	R+14.5V	+14.5V	46	————	R+14.5V	+14.5V	4/4
1/4	+11.5V	R+11.5V	+11.5V	47	————	R+11.5V	+11.5V	1/4
	+5V	AAAA	+5V	48	————	AAAA	+5V	
	+5V	AAAA	+5V	49	————	AAAA	+5V	
1/4	GND	G1	GND	50	GND	G1	GND	1/4

(|) - INPUT SIGNAL
(|) - OUTPUT SIGNAL
* - REFER TO THE COMPARISON CHART

REVERSE SIDE **AUDIO SCHEMATIC DIAGRAM**

W6(AUDIO) SCHEMATIC DIAGRAM 4/4 (FM AUDIO)

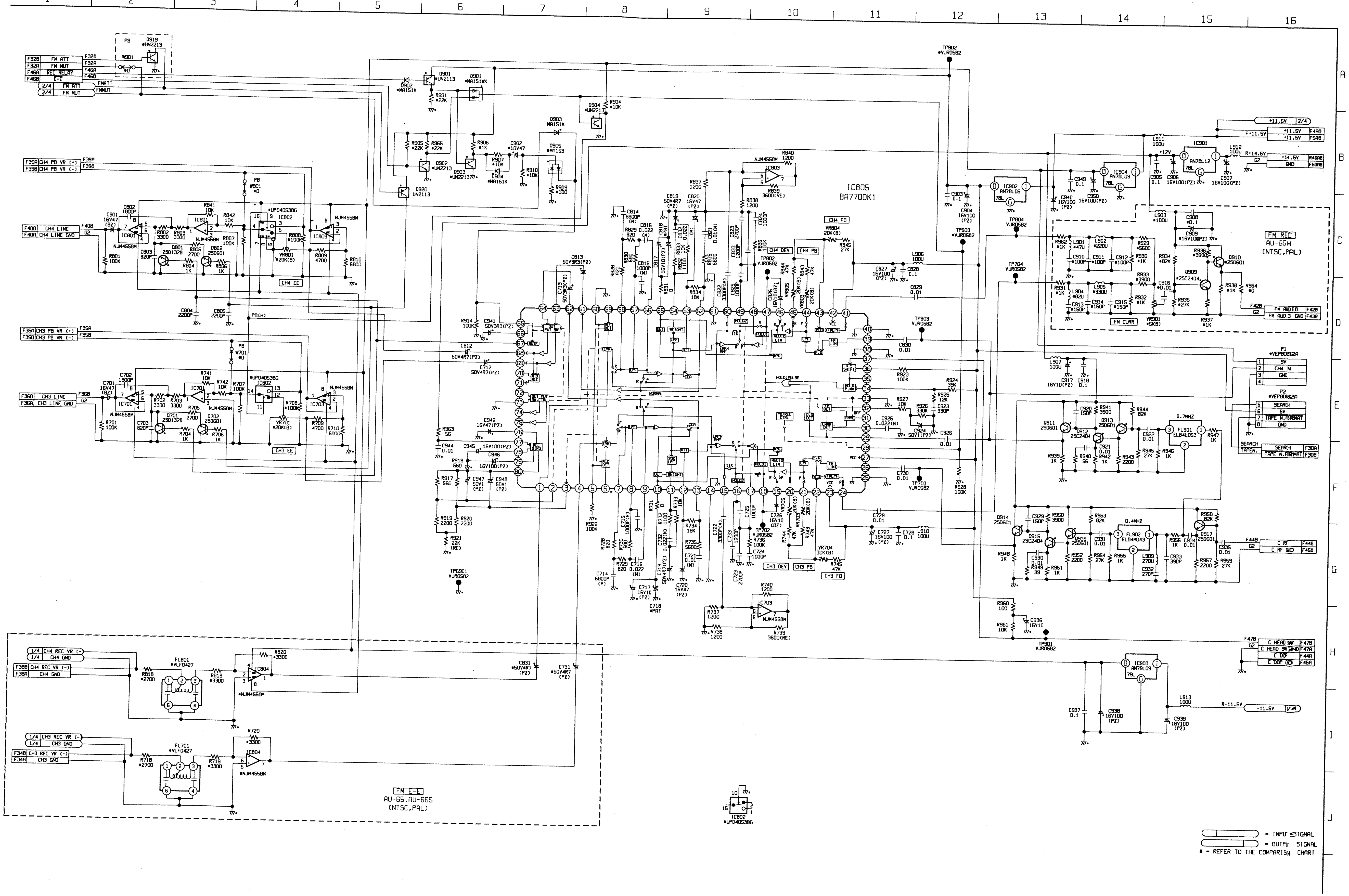

1
2
3
4
5
6
7
8
9
10
11
12
13
14
15
16
A
B
C
D
E
F
G
H
I
J
F32B FM ATT F32B
F32A FM MUT F32A
F46A REC RELAY F46A
F46B E-E F46B
2/4 FM ATT FMATT
2/4 FM MUT FMMUT
PB
Q919 *UN2213
W901
F39A CH4 PB VR (+) F39A
F39B CH4 PB VR (-) F39B
F40B CH4 LINE F40B
F40A CH4 LINE GND G2
IC801 NJM4558M
IC802 *UPD4053BG
IC803 NJM4558M
CH4 EE
F35A CH3 PB VR (+) F35A
F35B CH3 PB VR (-) F35B
F36B CH3 LINE F36B
F36A CH3 LINE GND G2
IC701 NJM4558M
IC702 *UPD4053BG
IC703 NJM4558M
CH3 EE
Q901 *UN2113
D901 *MA151WK
D902 *MA151K
D903 MA151K
D904 *MA151K
D905 *MA153
Q902 *UN2213
Q903 *UN2213
Q904 *UN2213
Q920 UN2113
TP902 *VJR0582
IC805 BA7700K1
IC703 NJM4558M
CH4 FD
CH4 DEV
CH4 PB
CH3 DEV
CH3 PB
CH3 FD
TP802 VJR0582
TP702 VJR0582
TP703 VJR0582
TP803 VJR0582
TP804 VJR0582
TP903 *VJR0582
TP704 VJR0582
TPG901 VJR0582
TP901 VJR0582
IC902 AN78L05
IC904 AN78L09
IC901 AN78L12
IC903 AN79L09
+11.5V 2/4
F+11.5V +11.5V F48B
+11.5V F58B
R+14.5V +14.5V F46AB
G2 GND F58B
FM REC
AU-65W
(NTSC,PAL)
FM CURR
F42B FM AUDIO F42B
G2 FM AUDIO GND F43B
P1 *VEP80082A
1 5V
2 CH4 IN
3 GND
P2 *VEP80082A
5 SEARCH
6 5V
7 TAPE N.FORMAT
8 GND
SEARCH SEARCH F30A
TAPEN. TAPE N.FORMAT F30B
FL901 ELB4L053
0.7MHZ
FL902 ELB4H043
0.4MHZ
F44B C RF F44B
G2 C RF GND F45B
F47B C HEAD SW F47B
C HEAD SW GND F47A
C DOP F44A
C DOP GND F45A
R-11.5V -11.5V 1/4
1/4 CH4 REC VR (-)
1/4 CH4 GND
F38B CH4 REC VR (-)
F38A CH4 GND
FL801 *VLF0427
IC804 *NJM4558M
1/4 CH3 REC VR (-)
1/4 CH3 GND
F34B CH3 REC VR (-)
F34A CH3 GND
FL701 *VLF0427
FM E-E
AU-65,AU-65S
(NTSC,PAL)
IC802 *UPD4053BG
= INPUT SIGNAL
= OUTPUT SIGNAL
* = REFER TO THE COMPARISON CHART

B0(B,MOTHER) SCHEMATIC DIAGRAM 1/2

MODEL / TYPE	AU-65H	AU-63H	AU-62H
NTSC	VEP80549H	VEP80549K	VEP80549J
PAL	VEP80549H	VEP80549K	VEP80549J

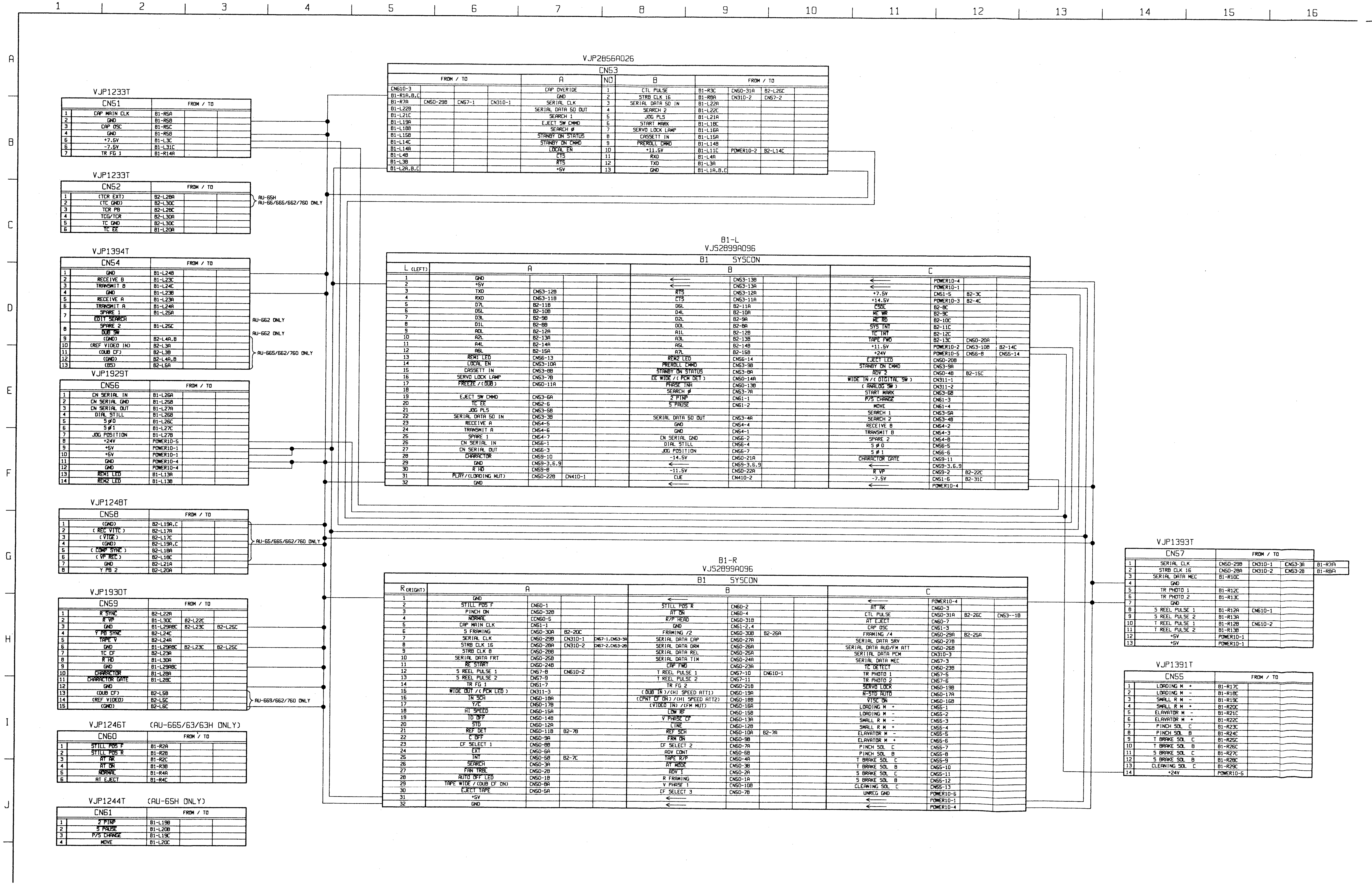

VJP2856A026
CN53
VJP1233T
CN51
VJP1233T
CN52
AU-65H
AU-66/665/662/760 ONLY
VJP1394T
CN54
AU-662 ONLY
AU-665/662/760 ONLY
VJP1929T
CN56
B1-L
VJS2899A096
B1 SYSCON
L (LEFT)
VJP1248T
CN58
AU-65/665/662/760 ONLY
VJP1930T
CN59
AU-665/662/760 ONLY
VJP1246T (AU-665/63/63H ONLY)
CN60
VJP1244T (AU-65H ONLY)
CN61
B1-R
VJS2899A096
B1 SYSCON
R (RIGHT)
VJP1393T
CN57
VJP1391T
CN55
FROM / TO

B0(B,MOTHER) SCHEMATIC DIAGRAM 2/2

	FROM / TO		
-29B	CN310-1	CN53-3A	B1-R7A
-28A	CN310-2	CN53-2B	B1-R8A
10C			
12C			
13C			
12A	CN610-1		
13A			
12B	CN610-2		
13B			
R10-1			
R10-1			

	FROM / TO	
17C		
18C		
19C		
20C		
21C		
22C		
23C		
24C		
25C		
26C		
27C		
28C		
29C		
R10-5		

VJP1230T (PCM ONLY)

CN310		FROM / TO				
1	SERIAL CLK	CN50-29B	CN57-1	CN53-3A	B1-R7A	
	OPEN SOL ON	P465-3				AU-662 ONLY
2	STRB CLK 16	CN50-28A	CN57-2	CN53-2B	B1-R8A	
	OPEN SOL OFF	P465-2				AU-662 ONLY
3	SERIAL DATA PCM	B1-R9C				
	+11.5V	P465-1				

VJP1230T (AU-65H/AU-63H/AU-62H ONLY)

CN311		FROM / TO		
1	WIDE IN /(DIGITAL SW)	B1-L16C	CN311-1	
2	(ANALOG SW)	B1-L17C		
3	WIDE OUT /(PCM LED)	B1-R15A	CN311-3	

VJP1229T (PAL ONLY)

CN410		FROM / TO			
1	PLAY	CN50-22B	B1-L31A		
	SEARCH				AU-662 ONLY
2	CUE	B1-L31B			
	TAPE N FMT	W6 F30A	(JAMPER)		AU-662 ONLY
3	CUE 1	B1-L19B			

VJP1230T

CN610		FROM / TO		
1	T REEL PULSE 1	CN57-10	B1-R12B	
2	S REEL PULSE 1	CN57-8	B1-R12A	
3	CAP OVERIDE	CN53-1A		

VJP1709

POWER10		FROM / TO		
1	+5V			
2	+11.5V			
3	+14.5V			
4	GND			
5	+24V			
6	UNREG GND			

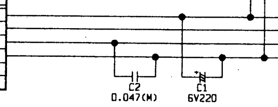

B2
VJS2899A096

B2 TCG/TCR (OPTION)

L (LEFT)	A				B				C			
1	GND				←				←			
2	+5V				←				←			
3	REF VIDEO IN	CN54-10			DUB CF IN	CN54-11			+7.5V	B1-L3C	CN51-5	
4	GND	CN54-9,12			GND	CN54-9,12			+14.5V	B1-L4C		
5	BS	CN54-13			DUB CF	CN59-13			REF VIDEO	CN59-14		
6	GND				GND				GND	CN59-15		
7	REF SCH	B1-R21B	CN50-10A		REF DET	B1-R21A	CN50-11B		INT	B1-R25A	CN50-5B	
8	D0L	B1-L8B			D1L	B1-L8A			CS DL	B1-L5C		
9	D2L	B1-L7B			D3L	B1-L7A			ME WR	B1-L6C		
10	D4L	B1-L6B			D5L	B1-L6A			ME RD	B1-L7C		
11	D6L	B1-L5B			D7L	B1-L5A			SYS INT	B1-L8C		
12	A0L	B1-L9A			A1L	B1-L9B			TC INT	B1-L9C		
13	A2L	B1-L10A			A3L	B1-L10B			TAPE FWD	B1-L10C	CN50-20A	
14	A4L	B1-L11A			A5L	B1-L11B			+11.5V	B1-L11C	CN53-10B	POWER10-2
15	A6L	B1-L12A			A7L	B1-L12B			ADV 2	B1-L15C	CN50-4B	
16	GND				GND				GND			
17	REC VITC	CN58-2							VIGE	CN58-3		
18	COMP SYNC	CN58-5							VP REC	CN58-6		
19	GND	CN58-1,4							GND	CN58-1,4		
20	Y PB 2	CN58-8							S FRAMING	B1-R6A	CN50-30A	
21	GND	CN58-7							GND			
22	R SYNC	CN59-1							RVP	CN59-2	B1-L30C	
23	TC CF	CN59-7							GND	CN59-3,6		
24	TAPE V	CN59-5							Y PB SYNC	CN59-4		
25	FRAMING /4	B1-R6C	CN50-29A						GND	CN59-3,6		
26	FRAMING /2	B1-R6B	CN50-30B						CTL PULSE	B1-R3C	CN50-31A	CN53-1B
27	TCG/TCR ON	CN50-32A							GND			
28	TCR EXT	CN52-1							TCR PB	CN52-3		
29	GND								GND			
30	TCG/TCR	CN52-4							TCG/TCR GND	CN52-2,5		
31									-7.5V			
32	GND				←				←			

VJP2893A064

CN50

FROM / TO				A	NO	B	FROM / TO			
B1-R28B				R FRAMING	1	AUTO OFF LED	B1-R28A			
B1-R27B				ADV 1	2	FAN TRBL	B1-R27A			
B1-R26A				SEARCH	3	AT MODE	B1-R26B			
B1-R25B				TAPE R/P	4	ADV2	B1-L15C	B2-L15C		
B1-R30A				EJECT TAPE	5	INT	B1-R25A	B2-L7C		
B1-R24A				EXT	6	ADV CONT	B1-R24B			
B1-R23B				CF SELECT 2	7	CF SELECT 3	B1-R30B			
B1-R29A				TAPE WIDE / (DUB CF ON)	8	CF SELECT 1	B1-R23A			
B1-R22A				C OFF	9	FRM ON	B1-R22B			
B1-R21B	B2-L7A			REF SCH	10	V PHASE 1	B1-R29B			
B1-L17A				FREEZE / (DUB)	11	REF DET	B1-R21A	B2-L7B		
B1-R20A				STD	12	LINE	B1-R20B			
B1-R19B				V PHASE CF	13	PHASE INH	B1-L17B			
B1-L16B				EE WIDE / (PCM DET)	14	ID OFF	B1-R19A			
B1-R18A				HI SPEED	15	LOW RF	B1-R18B			
B1-R17B				(VIDEO IN)/(FM MOT)	16	VISC ON	B1-R16C			
B1-R15C				N-STD AUTO	17	Y/C	B1-R17A			
B1-R16A				IN SCH	18	(CPNT CF ON)/(HI SPEED ATT2)	B1-R16B			
B1-R15B				(DUB IN)/(HI SPEED ATT1)	19	SERVO LOCK	B1-R14C			
B1-L10C	B2-L13C			TAPE TWD	20	EJECT LED	B1-L13C			
B1-L28B				-14.5V	21	TR FG2	B1-R14B			
B1-L30B				-11.5V	22	PINP / (LOADING MUT) / (PLAY)	B1-L31A	CN410-1		
B1-R11B				CAP FWD	23	TC DETECT	B1-R11C			
B1-R10B				SERIAL DATA TIM	24	RE START	B1-R11A			
B1-R9B				SERIAL DATA REL	25	SERIAL DATA FRT	B1-R10A			
B1-R8B				SERIAL DATA DRM	26	SERIAL DATA AUD/FM ATT	B1-R8C			
B1-R7B				SERIAL DATA CAP	27	SERIAL DATA SRV	B1-R7C			
B1-R8A	CN310-2	CN53-2B	CN57-2	STRB CLK 16	28	STRB CLK 8	B1-R9A			
B1-R6C	B2-L25A			FRAMING /4	29	SERIAL CLK	B1-R7A	CN310-1	CN53-3A	CN57-1
B1-R6A	B2-L20C			S FRAMING	30	FRAMING /2	B1-R6B	B2-26A		
B1-R3C	B2-L26C	CN53-1B		CLT PULSE	31	R/P HEAD	B1-R4B			
B2-27A				TCG/TCR ON	32	PINCH ON	B1-R3A			

SYSTEM CONTROL
SCHEMATIC DIAGRAM

TYPE \ MODEL	AU-65H	AU-63H	AU-62H
NTSC	VEP86121A	VEP86121C	VEP86121B
PAL	VEP86121D	VEP86121F	VEP86121E

B1(SYSTEM CONTROL) SCHEMATIC DIAGRAM 1/5

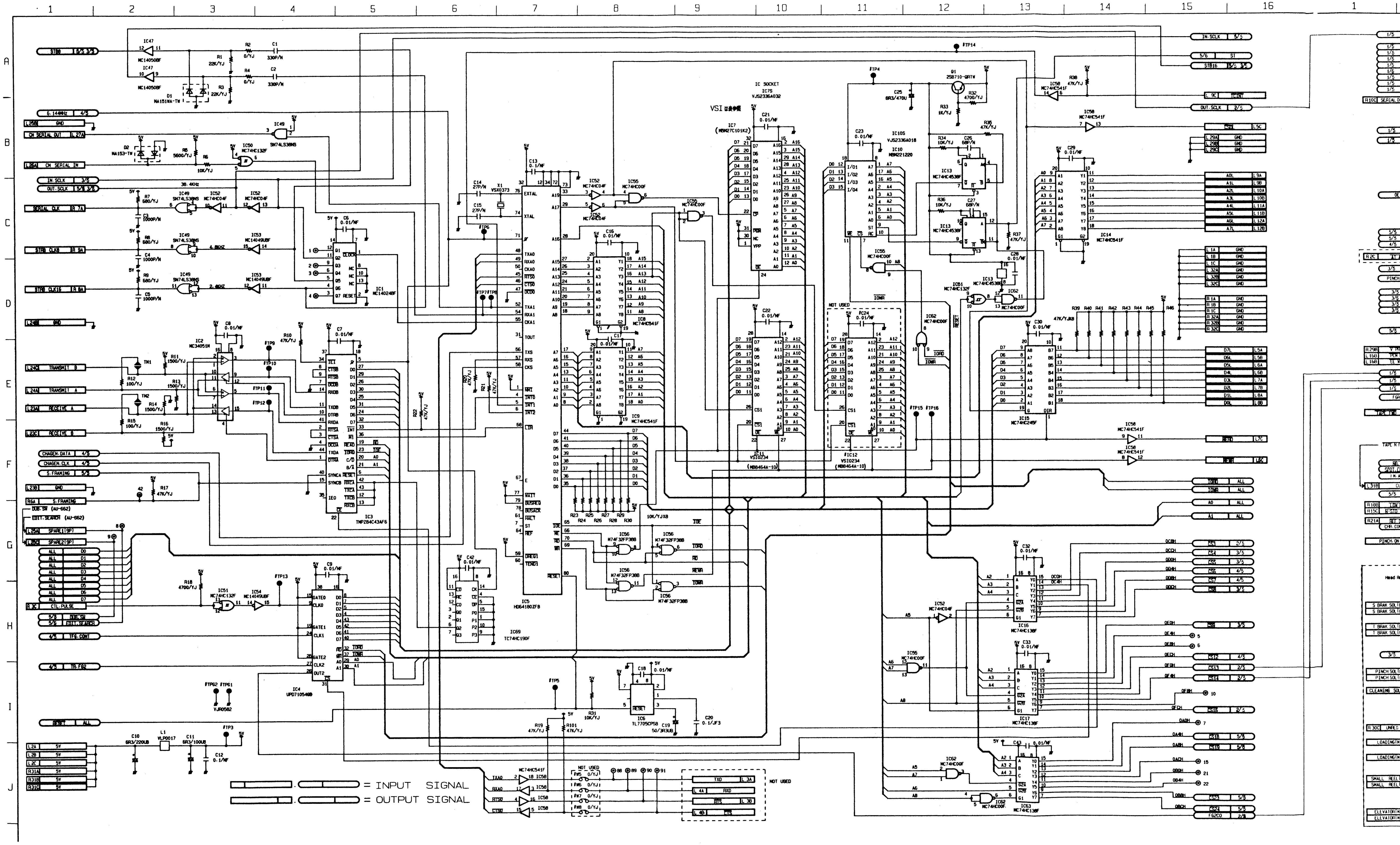

1 2 3 4 5 6 7 8 9 10 11 12 13 14 15 16
A B C D E F G H I J
IC47 MC14050BF
D1 MA151WA-TW
IC49 SN74LS38NS
IC50 MC74HC132F
IC52 MC74HC04F
IC53 MC14049UBF
IC1 MC14024BF
IC2 MC34051M
IC3 TMPZ84C43AF6
IC4 UPD71054GB
IC51 MC74HC132F
IC54 MC14049UBF
X1 VSX0373
IC5 HD64180ZF8
IC69 TC74HC190F
IC55 MC74HC00F
IC8 MC74HC541F
IC9 MC74HC541F
IC56 M74F32FP38B
IC6 TL7705CPS8
IC7 MBM27C101K2
IC SOCKET IC75 VJS2336A032
VSI は実装
IC105 VJS2336A018
IC10 MB8221220
IC11 VSI0234 (MB8464A-10)
IC12 VSI0234 (MB8464A-10)
NOT USED
Q1 2SB710-QRTW
IC13 MC74HC4538F
IC58 MC74HC541F
IC14 MC74HC541F
IC15 MC74HC245F
IC16 MC74HC138F
IC17 MC74HC138F
IC62 MC74HC00F
IC63 MC74HC138F
IC61 MC74HC132F
STBB
6.144MHz 4/5
CH SERIAL OUT
CH SERIAL IN
IN SCLK 3/5
OUT SCLK 5/5
SERIAL CLK
STBB CLK8
STBB CLK16
TRANSMIT B
TRANSMIT A
RECEIVE A
RECEIVE B
CHAGEN DATA 4/5
CHAGEN CLK 4/5
S.FRAMING 5/5
DUB-SW (AU-662)
EDIT.SEARCH (AU-662)
SPARE1(9P)
SPARE2(9P)
CTL.PULSE
DUB.SW
EDIT.SEARCH
TF6.CONT
TR-F62
RESET
TXD RXD RTS CTS
NOT USED
= INPUT SIGNAL
= OUTPUT SIGNAL

REVERSE SIDE **SYSTEM CONTROL SCHEMATIC DIAGRAM**

B1(SYSTEM CONTROL) SCHEMATIC DIAGRAM 2/5

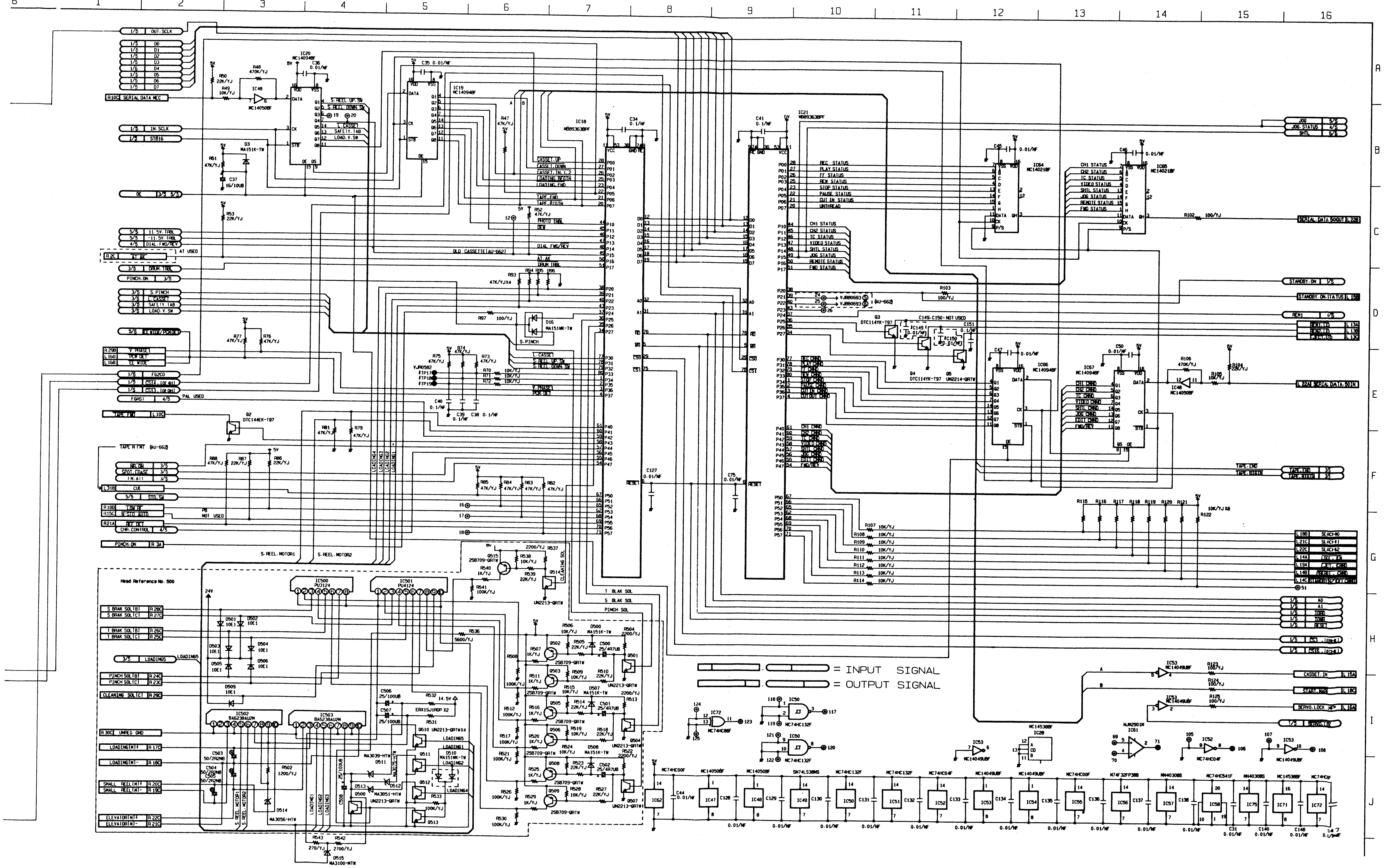

6
1
2
3
4
5
6
7
8
9
10
11
12
13
14
15
16
A
B
C
D
E
F
G
H
I
J
IC20 MC14094BF
IC19 MC14094BF
IC18 MB89363BPF
IC21 MB89363BPF
IC64 MC14021BF
IC65 MC14021BF
IC66 MC14094BF
IC67 MC14094BF
IC500 PU4124
IC501 PU4124
IC502 BA6238AU2N
IC503 BA6238AU2N
OUT.SCLK
IN.SCLK
STB16
SERIAL DATA MEC
SERIAL DATA 5OOUT
SERIAL DATA 5OIN
S.REEL UP SW
S.REEL DOWN SW
SAFETY.TAB
LOAD.V.SW
CASSET UP
CASSET DOWN
CASSET IN 1.2
LOADING.BEGIN
LOADING.END
TAPE.END
TAPE.BIGIN
PHOTO TRBL
DEW
DIAL FWD/REV
OLD CASSETTE(AU-662)
AT.AK
DRUM TRBL
REC STATUS
PLAY STATUS
FF STATUS
REW STATUS
STOP STATUS
PAUSE STATUS
CUT IN STATUS
UNTHREAD
CH1 STATUS
CH2 STATUS
TC STATUS
VIDEO STATUS
SHTL STATUS
JOG STATUS
REMOTE STATUS
FWD STATUS
JOG
JOG.STATUS
SHTL
STANDBY.ON
STANDBY.ON.STATUS
REM1
TAPE.END
TAPE.BIGIN
S.REEL.MOTOR1
S.REEL.MOTOR2
T BLAK SOL
S BLAK SOL
PINCH SOL
S BRAK SOL(B)
S BRAK SOL(C)
T BRAK SOL(B)
T BRAK SOL(C)
LOADING5
PINCH SOL(B)
PINCH SOL(C)
CLEANING SOL(C)
UNREG GND
LOADING(M)+
LOADING(M)-
SMALL REEL(M)+
SMALL REEL(M)-
ELEVATOR(M)+
ELEVATOR(M)-
CLEANING SOL
Head Reference No. 500
CASSET. IN
START.MAG
SERVO.LOCK
SERVOLOCK
= INPUT SIGNAL
= OUTPUT SIGNAL

MODEL / TYPE	AU-65H	AU-63H	AU-62H
NTSC	VEP86121A	VEP86121C	VEP86121B
PAL	VEP86121D	VEP86121F	VEP86121E

B1(SYSTEM CONTROL) SCHEMATIC DIAGRAM 3/5

B1(S

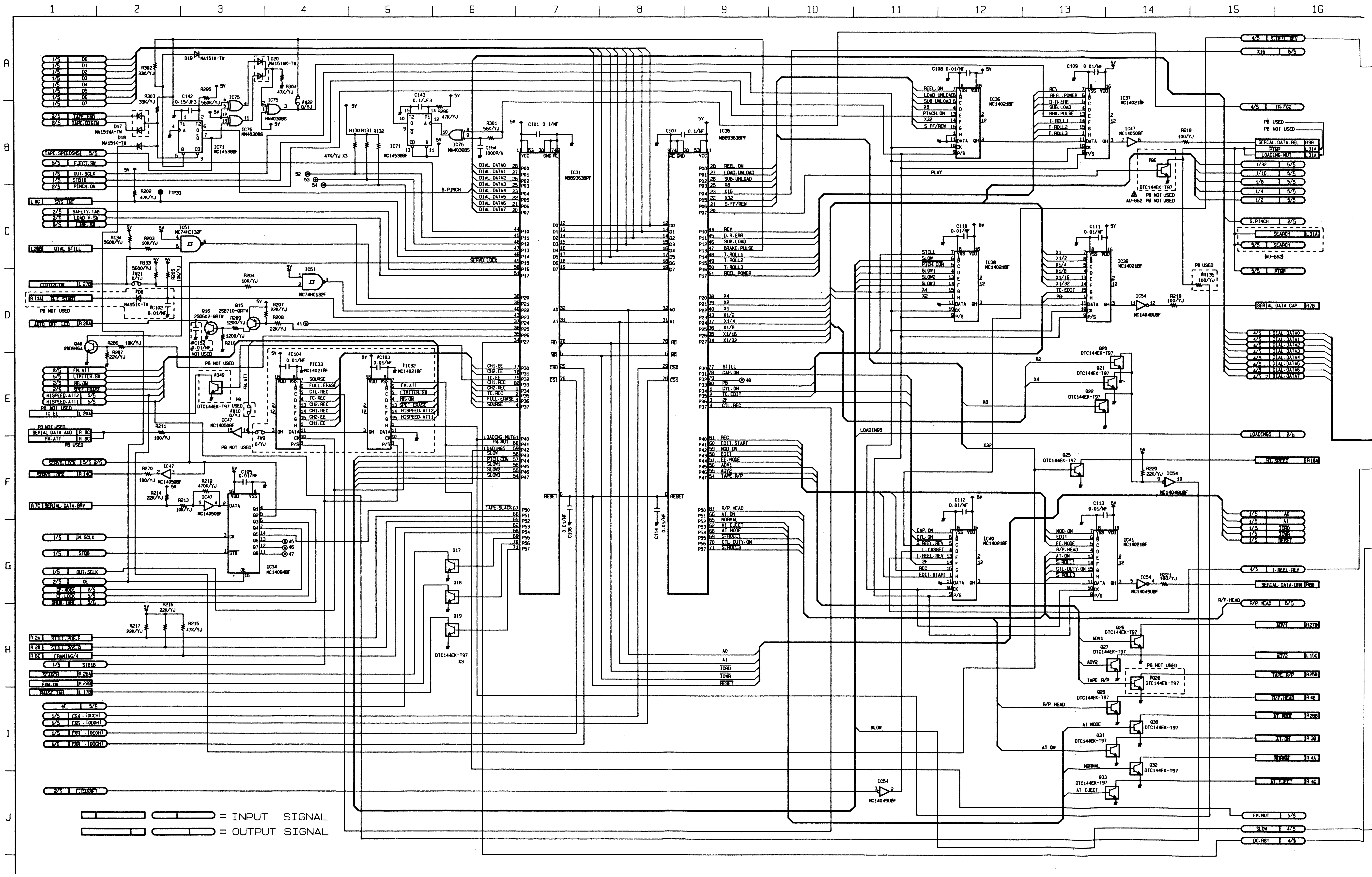

1 2 3 4 5 6 7 8 9 10 11 12 13 14 15 16
A B C D E F G H I J
IC31 MB89363BPF
IC35 MB89363BPF
IC36 MC14021BF
IC37 MC14021BF
IC38 MC14021BF
IC39 MC14021BF
IC40 MC14021BF
IC41 MC14021BF
IC32 MC14021BF
IC33 MC14021BF
IC34 MC14094BF
IC47 MC14050BF
IC51 MC74HC132F
IC54 MC14049UBF
IC71 MC14538BF
IC75 MN4030BS
PB NOT USED
PB USED
= INPUT SIGNAL
= OUTPUT SIGNAL

B1(SYSTEM CONTROL) SCHEMATIC DIAGRAM 4/5

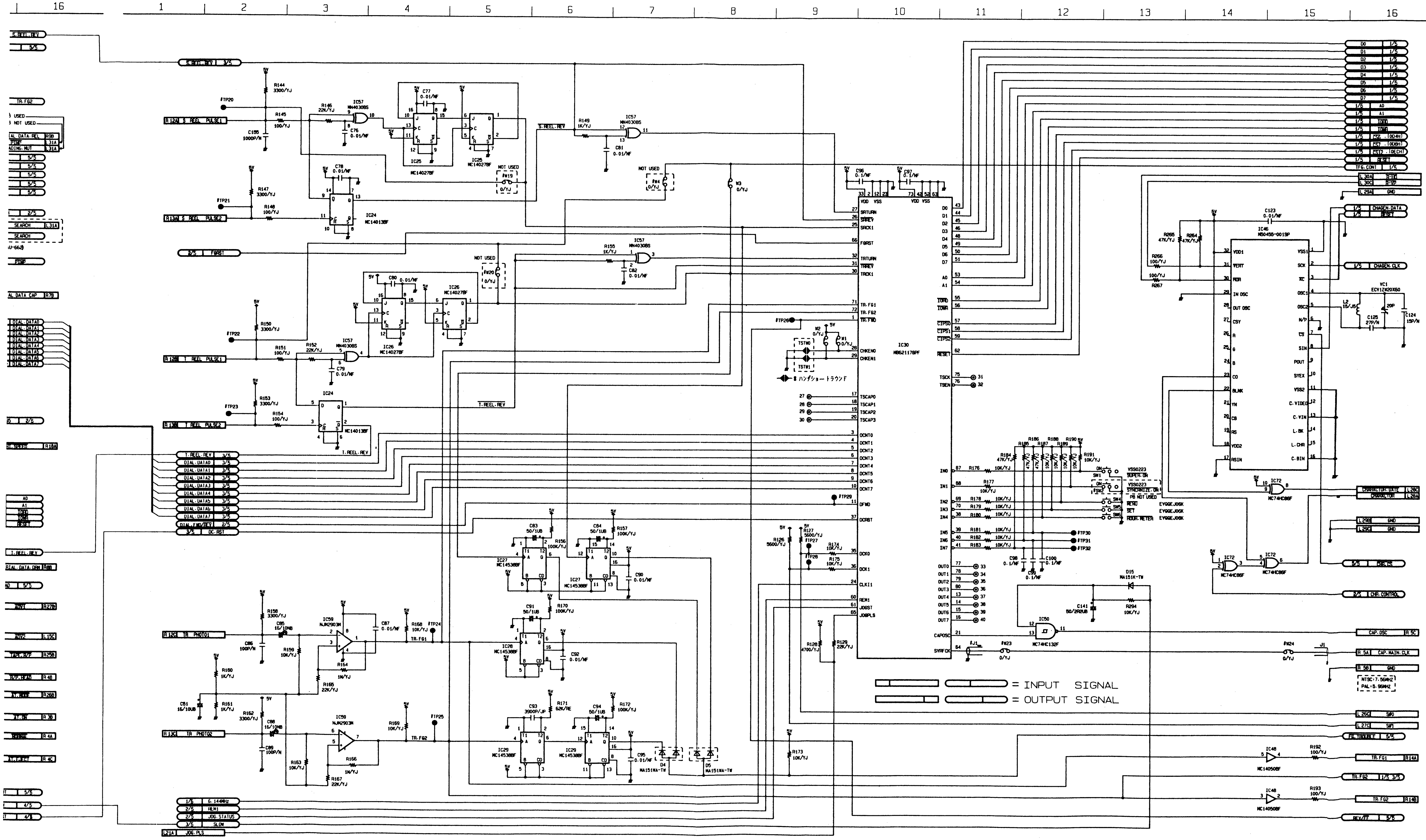
16
1
2
3
4
5
6
7
8
9
10
11
12
13
14
15
16
S.REEL.REV 3/5
R12A S REEL PULSE1
R13A S REEL PULSE2
R12B T REEL PULSE1
R13B T REEL PULSE2
2/5 FGRST
T.REEL.REV 3/5
DIAL.DATA0 3/5
DIAL.DATA1 3/5
DIAL.DATA2 3/5
DIAL.DATA3 3/5
DIAL.DATA4 3/5
DIAL.DATA5 3/5
DIAL.DATA6 3/5
DIAL.DATA7 3/5
DIAL.END/REV 2/5
3/5 DC.RST
R12C TR PHOTO1
R13C TR PHOTO2
1/5 6.144MHz
2/5 REM1
2/5 JOG.STATUS
2/5 SLOW
L21A JOG.PLS
IC57 MN4030BS
IC25 MC14027BF
IC24 MC14013BF
IC26 MC14027BF
IC27 MC14538BF
IC28 MC14538BF
IC29 MC14538BF
IC59 NJM2903M
NOT USED
IC30 MB62117BPF
IC46 M50455-001SP
IC72 MC74HC86F
IC50 MC74HC132F
IC48 MC14050BF
D0 1/5
D1 1/5
D2 1/5
D3 1/5
D4 1/5
D5 1/5
D6 1/5
D7 1/5
1/5 A0
1/5 A1
1/5 IORD
1/5 IOWR
1/5 CS2. (0D4H)
1/5 CS7. (0D8H)
1/5 CS12. (0ECH)
1/5 RESET
TFG.CONT 1/5
L30A REW
L30C R-VP
L29A GND
1/5 CHAGEN.DATA
1/5 RESET
1/5 CHAGEN.CLK
YC1 ECY1Z#20X60
CHARACTOR.GATE L20C
CHARACTOR L20A
L29B GND
L29C GND
5/5 REG.TS
2/5 CHR.CONTROL
CAP.OSC R 5C
R 5A CAP.MAIN.CLK
R 5B GND
NTSC:7.56MHZ
PAL:8.96MHZ
L26C SW0
L27C SW1
FG.TROUBLE 5/5
TR.FG1 R14A
TR.FG2 1/5 3/5
TR.FG2 R14B
REV/FF 5/5
SW1 VSS0223 SUPER.ON
VSS0223 SYNCHRONIZE.ON
SW3 PB NOT USED
SW4 RENO EVQQEJ06K
SW5 SET EVQQEJ06K
SW6 HOUR.METER EVQQEJ06K
D15 MA151K-TW
D4 MA151WA-TW
D5 MA151WA-TW
= INPUT SIGNAL
= OUTPUT SIGNAL

MODEL / TYPE	AU-65H	AU-63H	AU-62H
NTSC	VEP86121A	VEP86121C	VEP86121B
PAL	VEP86121D	VEP86121F	VEP86121E

B1(SYSTEM CONTROL) SCHEMATIC DIAGRAM 5/5

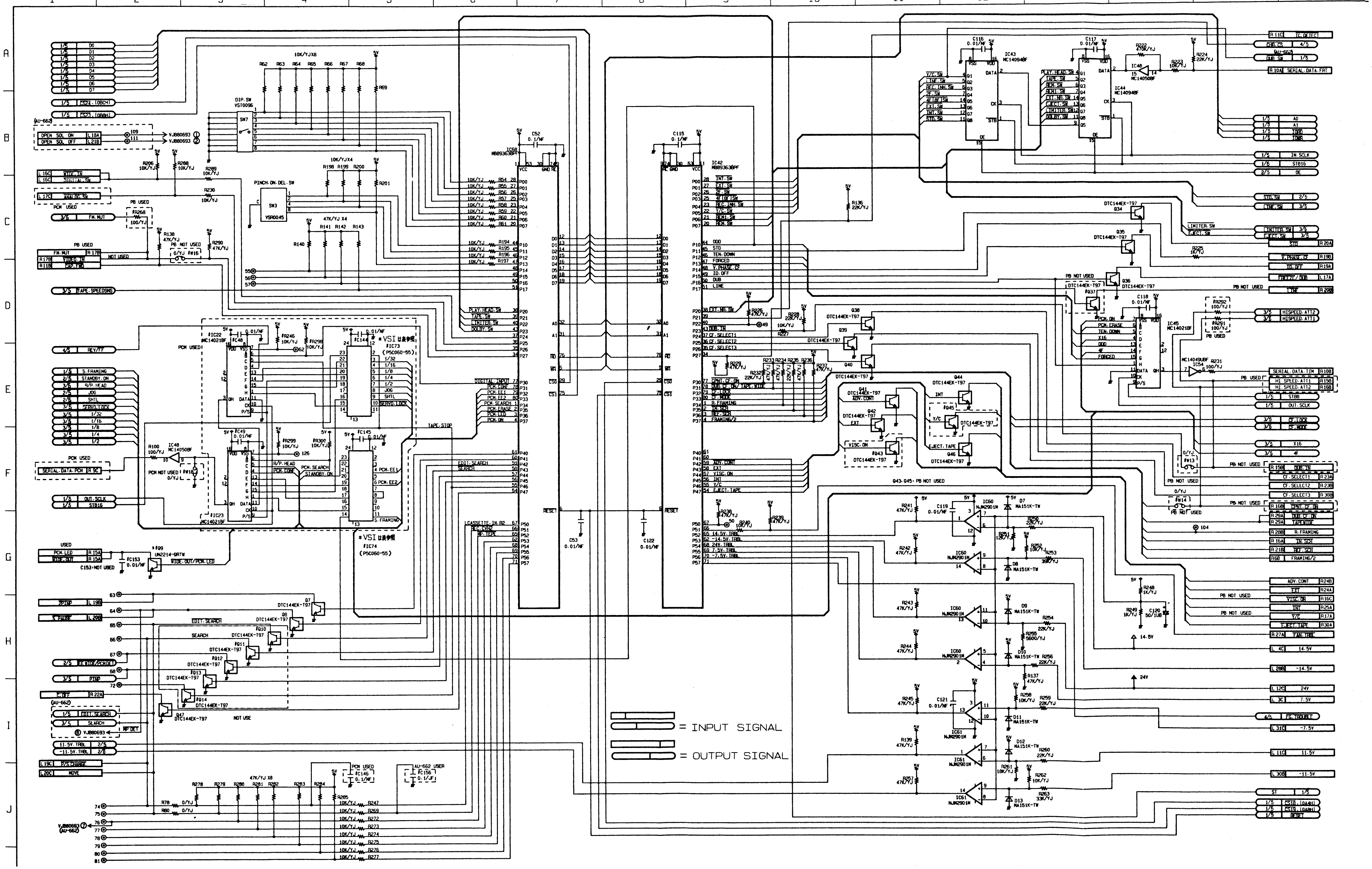
1
2
3
4
5
6
7
8
9
10
11
12
13
14
15
16
A
B
C
D
E
F
G
H
I
J
IC68 MB89363BPF
IC42 MB89363BPF
IC43 MC14094BF
IC44 MC14094BF
IC45 MC14021BF
IC48 MC14050BF
IC22 MC14021BF
IC23 MC14021BF
IC73 (P5C060-55)
IC74 (P5C060-55)
IC50 NJM2901M
IC61 NJM2901M
DIP-SW VSI0096
PINCH-ON-DEL-SW
SW3 VSR0045
DTC144EK-T97
UN2214-QRTW
MA151K-TW
PCM USED
PB USED
PB NOT USED
NOT USED
AU-662
RESET
= INPUT SIGNAL
= OUTPUT SIGNAL

REVERSE SIDE **SYSTEM CONTROL SCHEMATIC DIAGRAM**

VIDEO I/O SCHEMATIC DIAGRAM

TYPE \ MODEL	AU-65H	AU-63H	AU-62H
NTSC	VEP83174A	VEP83174B	VEP83174B
PAL	VEP83174C	VEP83174B	VEP83174B

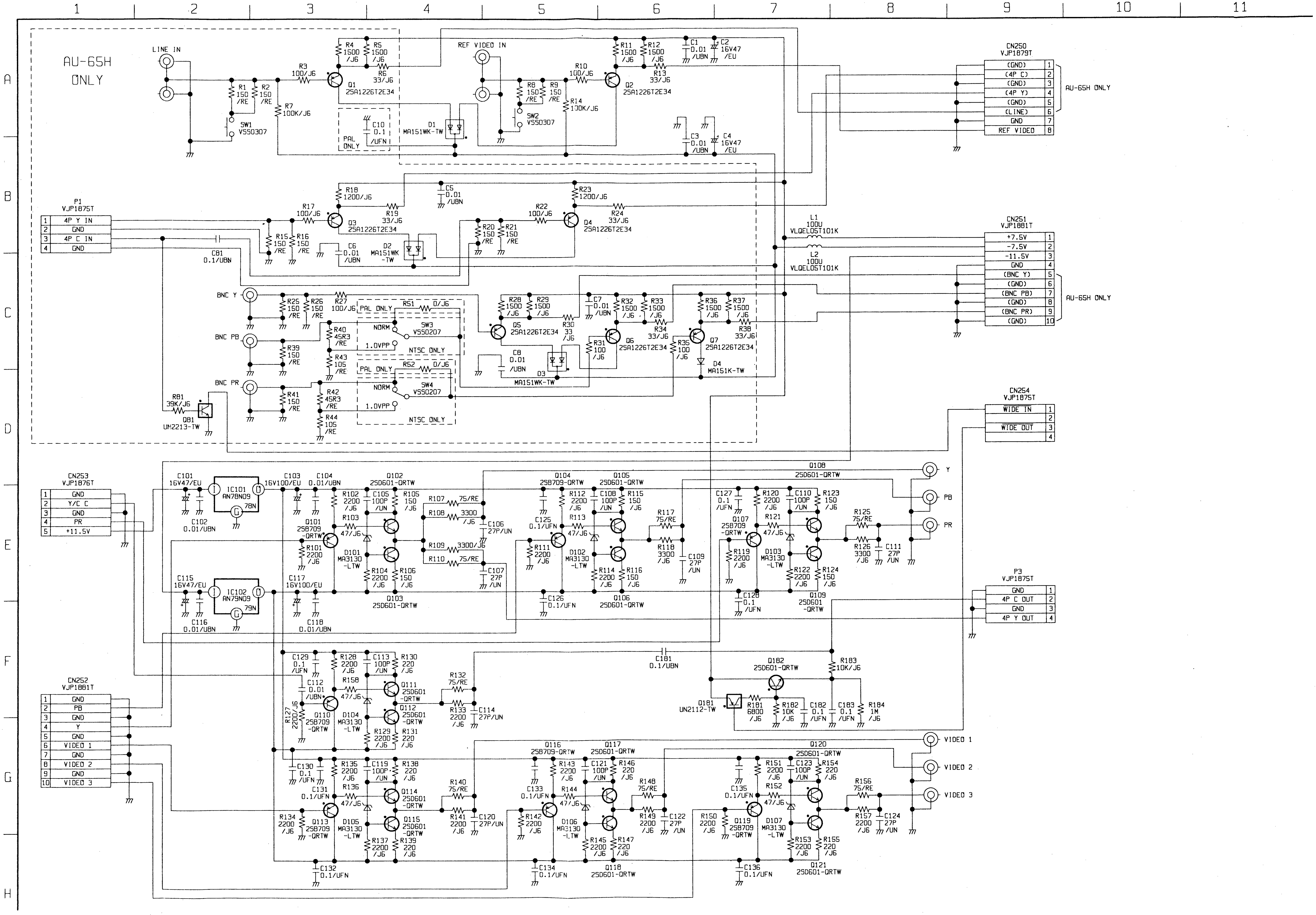

AU-65H ONLY
LINE IN
REF VIDEO IN
SW1 VSS0307
SW2 VSS0307
Q1 2SA1226TE34
Q2 2SA1226TE34
D1 MA151WK-TW
PAL ONLY
P1 VJP1875T
4P Y IN
GND
4P C IN
GND
Q3 2SA1226TE34
Q4 2SA1226TE34
D2 MA151WK-TW
BNC Y
BNC PB
BNC PR
SW3 VSS0207
SW4 VSS0207
NORM
1.0VPP
NTSC ONLY
Q5 2SA1226TE34
Q6 2SA1226TE34
Q7 2SA1226TE34
D3 MA151WK-TW
D4 MA151K-TW
Q81 UN2213-TW
L1 100U VLQEL0ST101K
L2 100U VLQEL0ST101K
CN250 VJP1879T
(GND)
(4P C)
(4P Y)
(LINE)
GND
REF VIDEO
CN251 VJP1881T
+7.5V
-7.5V
-11.5V
(BNC Y)
(BNC PB)
(BNC PR)
CN254 VJP1875T
WIDE IN
WIDE OUT
CN253 VJP1876T
Y/C C
PR
+11.5V
IC101 AN78N09
IC102 AN79N09
Q108 2SD601-QRTW
Y
PB
PR
P3 VJP1875T
4P C OUT
4P Y OUT
CN252 VJP1881T
VIDEO 1
VIDEO 2
VIDEO 3
Q182 2SD601-QRTW
Q181 UN2112-TW
Q120 2SD601-QRTW
1
2
3
4
5
6
7
8
9
10
11
A
B
C
D
E
F
G
H

MODEL TYPE	AU-65H	AU-63H	AU-62H
NTSC	VEP84094G	VEP84094C	VEP84094C
PAL	VEP84094G	VEP84094C	VEP84094C

AUDIO I/O SCHEMATIC DIAGRAM 1/2

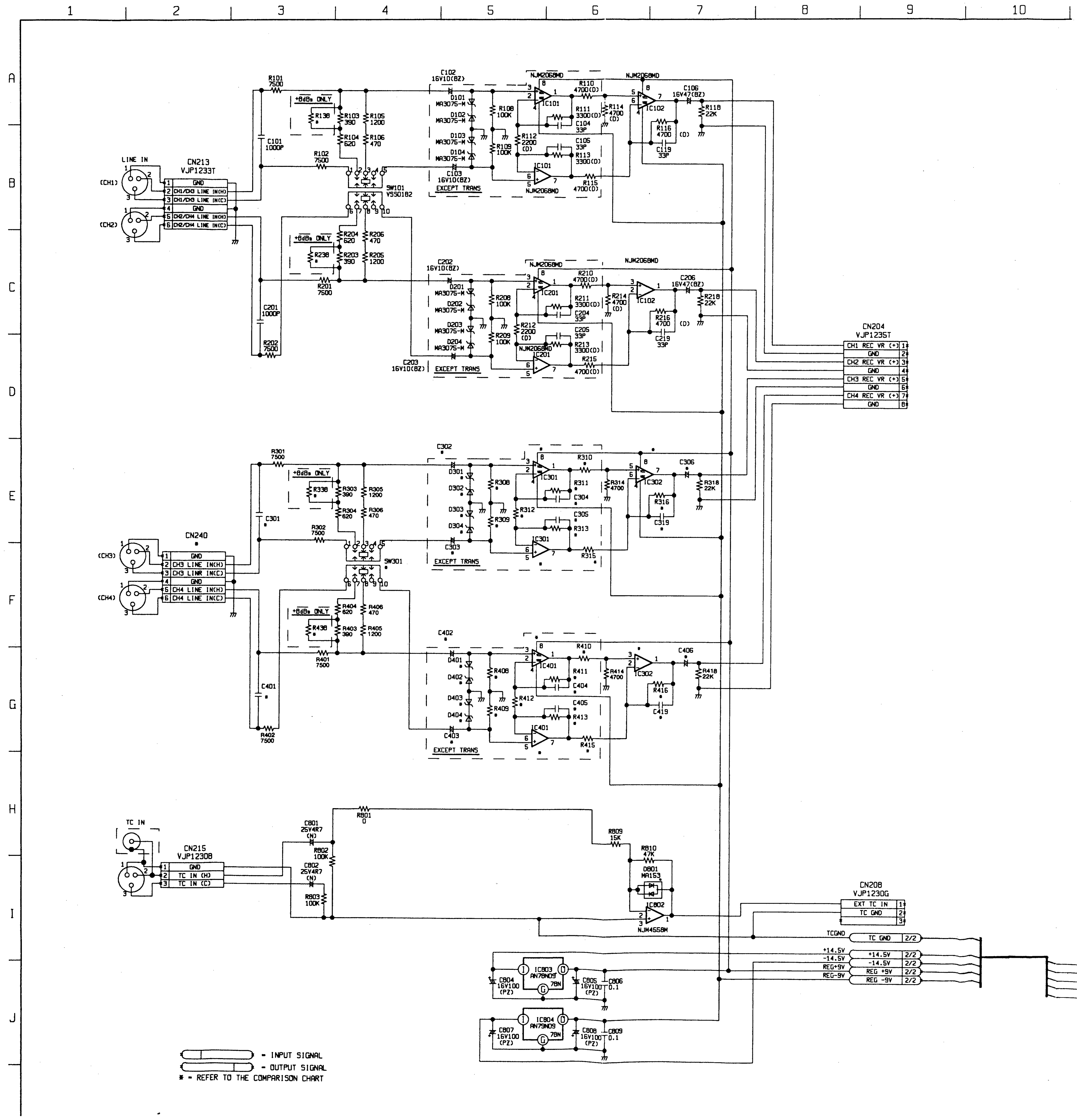

1
2
3
4
5
6
7
8
9
10
A
B
C
D
E
F
G
H
I
J
LINE IN
(CH1)
(CH2)
(CH3)
(CH4)
CN213
VJP1233T
GND
CH1/CH3 LINE IN(H)
CH1/CH3 LINE IN(C)
CH2/CH4 LINE IN(H)
CH2/CH4 LINE IN(C)
CN240
CH3 LINE IN(H)
CH3 LINE IN(C)
CH4 LINE IN(H)
CH4 LINE IN(C)
R101 7500
R102 7500
R201 7500
R202 7500
R301 7500
R302 7500
R401 7500
R402 7500
C101 1000P
C201 1000P
C301
C401
+8dBs ONLY
R138
R238
R338
R438
R103 390
R104 620
R105 1200
R106 470
R203 390
R204 620
R205 1200
R206 470
SW101 VSS0182
SW301
C102 16V10(BZ)
C103 16V10(BZ)
C202 16V10(BZ)
C203 16V10(BZ)
D101 MA3075-M
D102 MA3075-M
D103 MA3075-M
D104 MA3075-M
EXCEPT TRANS
R108 100K
R109 100K
R110 4700(D)
R111 3300(D)
R112 2200 (D)
R113 3300(D)
R114 4700 (D)
R115 4700(D)
R116 4700
R118 22K
C104 33P
C105 33P
C106 16V47(BZ)
C119 33P
IC101
IC102
NJM2068MD
IC201
IC202
IC301
IC302
IC401
IC402
CN204
VJP1235T
CH1 REC VR (+)
GND
CH2 REC VR (+)
CH3 REC VR (+)
CH4 REC VR (+)
TC IN
CN215
VJP1230B
TC IN (H)
TC IN (C)
C801 25V4R7 (N)
C802 25V4R7 (N)
R801 0
R802 100K
R803 100K
R809 15K
R810 47K
D801 MA153
IC802
NJM4558M
CN208
VJP1230G
EXT TC IN
TC GND
TCGND
+14.5V
-14.5V
REG+9V
REG-9V
REG +9V
REG -9V
2/2
IC803 AN78N09
IC804 AN79N09
C804 16V100 (PZ)
C805 16V100 (PZ)
C806 0.1
C807 16V100 (PZ)
C808 16V100 (PZ)
C809 0.1
= INPUT SIGNAL
= OUTPUT SIGNAL
* = REFER TO THE COMPARISON CHART

AUDIO I/O SCHEMATIC DIAGRAM 2/2

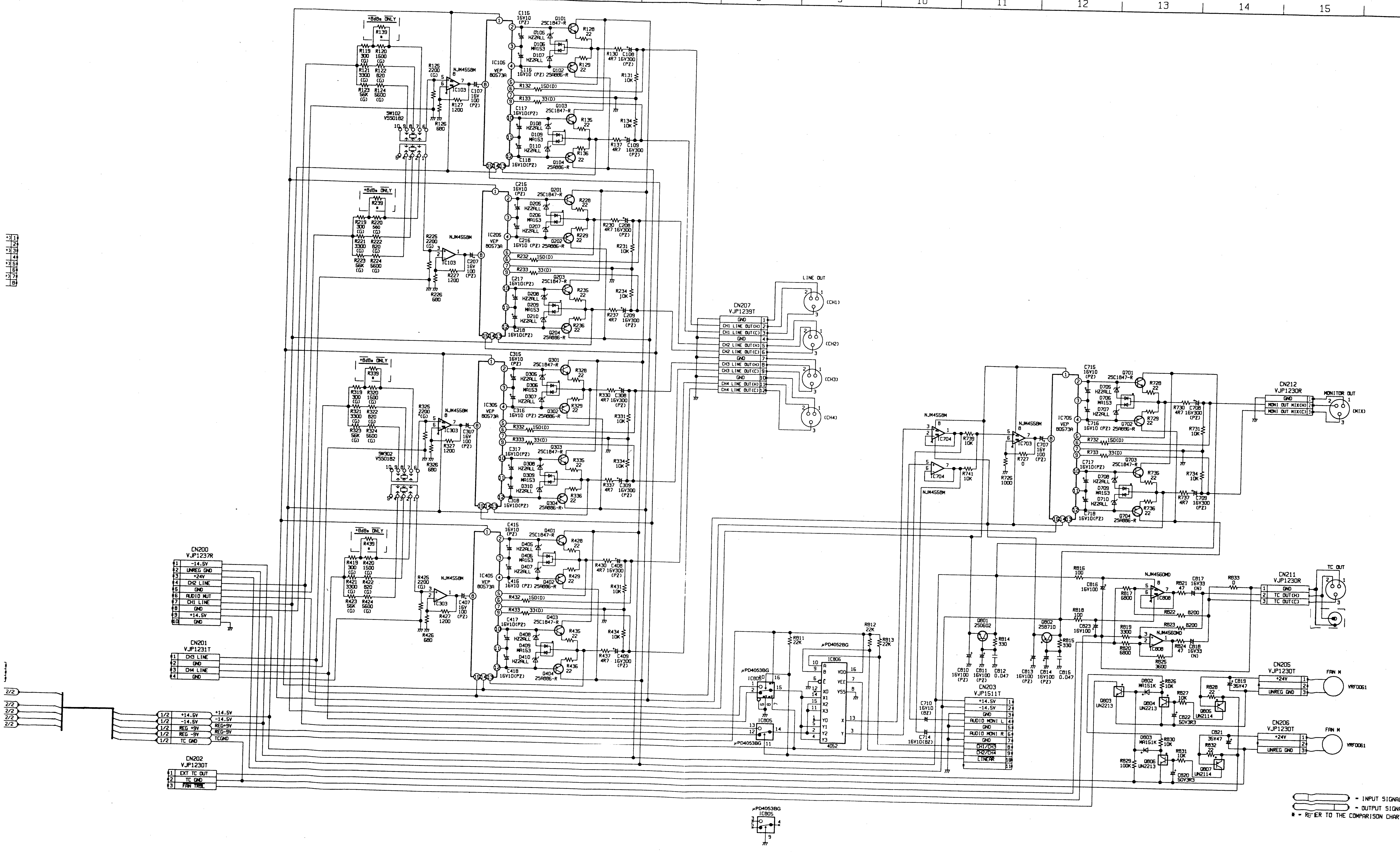

9
10
1
2
3
4
5
6
7
8
9
10
11
12
13
14
15
+8dBm ONLY
R139
R119 300
R120 1600
R121 3300
R122 820
R123 56K
R124 5600
R125 2200
NJM4558M
IC103
C107 16V 100 (PZ)
R127 1200
R126 680
SW102 VSS0182
IC105 VEP 80573A
C115 16V10 (PZ)
Q101 2SC1847-R
D105 HZ2ALL
D106 MA153
D107 HZ2ALL
Q102 2SA886-R
R128 22
R129 22
R130 4R7
C108 16V300 (PZ)
R131 10K
R132 150(D)
R133 33(D)
C117 16V10(PZ)
Q103 2SC1847-R
D108 HZ2ALL
D109 MA153
D110 HZ2ALL
R135 22
R134 10K
R137 4R7
C109 16V300 (PZ)
R136 22
C118 16V10(PZ)
Q104 2SA886-R
IC205 VEP 80573A
IC305 VEP 80573A
IC405 VEP 80573A
SW302 VSS0182
LINE OUT
(CH1)
(CH2)
(CH3)
(CH4)
CN207 VJP1239T
GND
CH1 LINE OUT(H)
CH1 LINE OUT(C)
CH2 LINE OUT(H)
CH2 LINE OUT(C)
CH3 LINE OUT(H)
CH3 LINE OUT(C)
CH4 LINE OUT(H)
CH4 LINE OUT(C)
CN200 VJP1237R
-14.5V
UNREG GND
+24V
CH2 LINE
GND
AUDIO MUT
CH1 LINE
GND
+14.5V
GND
CN201 VJP1231T
CH3 LINE
GND
CH4 LINE
GND
+14.5V
-14.5V
REG +9V
REG -9V
TC GND
REG+9V
REG-9V
TCGND
CN202 VJP1230T
EXT TC OUT
TC GND
FAN TRBL
μPD4053BG
IC805
μPD4052BG
IC806
4052
R811 22K
R812 22K
R813 22K
Q801 2SD602
Q802 2SB710
R814 330
R815 330
C810 16V100 (PZ)
C811 16V100 (PZ)
C812 0.047
C813 16V100 (PZ)
C814 16V100 (PZ)
C815 0.047
C710 16V10 (BZ)
C714 16V10(BZ)
CN203 VJP1511T
+14.5V
-14.5V
GND
AUDIO MONI L
GND
AUDIO MONI R
GND
CH1/CH3
CH2/CH4
LINEAR
NJM4558M
IC704
R739 10K
R741 10K
IC703
C707 16V 100 (PZ)
R727 0
R726 1000
IC705 VEP 80573A
MONITOR OUT
(MIX)
CN212 VJP1230R
GND
MONI OUT MIX(H)
MONI OUT MIX(C)
R816 100
C816 16V100
R817 6800
NJM4560MD
IC808
R821 47
C817 16V33 (N)
R822 8200
R818 100
C823 16V100
R819 3300
R820 6800
R823 8200
R824 47
C818 16V33 (N)
R825 3600
R833 0
TC OUT
CN211 VJP1230R
GND
TC OUT(H)
TC OUT(C)
D802 MA151K
R826 10K
D803 UN2213
D804 UN2213
R827 10K
C822 50V3R3
D805 UN2114
R828 22
C819 35V47
CN205 VJP1230T
+24V
UNREG GND
FAN M
VRF0061
D803 MA151K
R830 10K
R829 100K
D806 UN2213
R831 10K
R832 22
C821 35V47
C820 50V3R3
D807 UN2114
CN206 VJP1230T
+24V
UNREG GND
FAN M
VRF0061
= INPUT SIGNAL
= OUTPUT SIGNA
* = REFER TO THE COMPARISON CHAR

FRONT INTERFACE
SCHEMATIC DIAGRAM

MODEL / TYPE	AU-65H	AU-63H	AU-62H
NTSC	VEP80553D	VEP80553C	VEP80553B
PAL	VEP80631D	VEP80631B	VEP80631C

FRONT INTERFACE SCHEMATIC DIAGRAM (FOR NTSC)

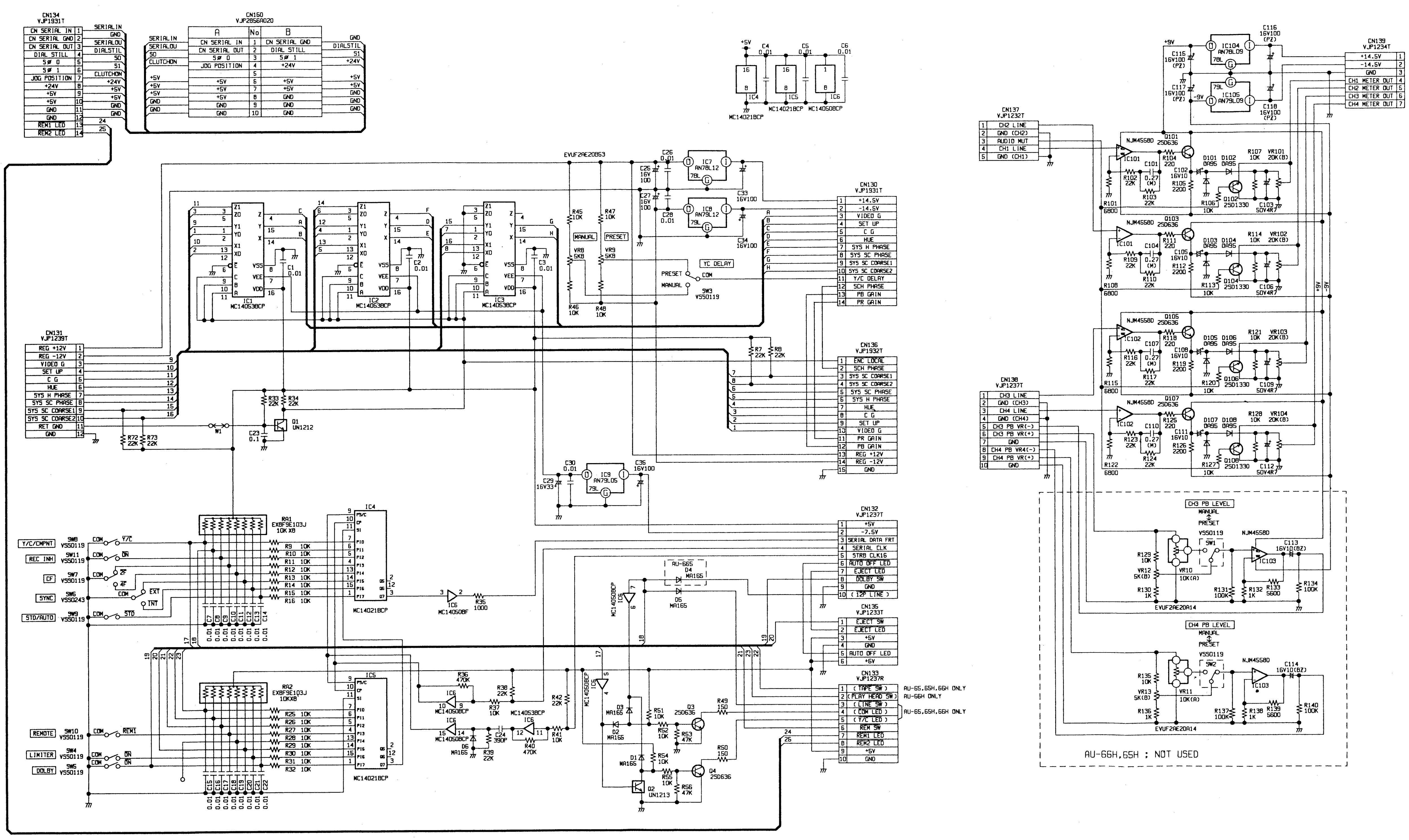
CN134
VJP1931T
CN SERIAL IN 1
CN SERIAL GND 2
CN SERIAL OUT 3
DIAL STILL 4
S∅ 0 5
S∅ 1 6
JOG POSITION 7
+24V 8
+5V 9
+5V 10
GND 11
GND 12
REM1 LED 13
REM2 LED 14
SERIALIN
SERIALOU
DIALSTIL
S0
S1
CLUTCHON
CN150
VJP2856A020
A No B
CN SERIAL IN 1 CN SERIAL GND
CN SERIAL OUT 2 DIAL STILL
S∅ 0 3 S∅ 1
JOG POSITION 4 +24V
5
+5V 6 +5V
+5V 7 +5V
+5V 8 GND
GND 9 GND
GND 10 GND
+5V
IC4 IC5 IC6
MC14021BCP MC14021BCP MC14050BCP
IC1 MC14053BCP
IC2 MC14053BCP
IC3 MC14053BCP
EVUF2AE20B53
IC7 AN78L12
IC8 AN79L12
MANUAL
PRESET
YC DELAY
SW3 VSS0119
CN130
VJP1931T
1 +14.5V
2 -14.5V
3 VIDEO G
4 SET UP
5 C G
6 HUE
7 SYS H PHASE
8 SYS SC PHASE
9 SYS SC COARSE1
10 SYS SC COARSE2
11 Y/C DELAY
12 SCH PHASE
13 PB GAIN
14 PR GAIN
CN131
VJP1239T
REG +12V 1
REG -12V 2
VIDEO G 3
SET UP 4
C G 5
HUE 6
SYS H PHASE 7
SYS SC PHASE 8
SYS SC COARSE1 9
SYS SC COARSE2 10
RET GND 11
GND 12
Q1 UN1212
CN136
VJP1932T
1 ENC LOCAL
2 SCH PHASE
3 SYS SC COARSE1
4 SYS SC COARSE2
5 SYS SC PHASE
6 SYS H PHASE
7 HUE
8 C G
9 SET UP
10 VIDEO G
11 PR GAIN
12 PB GAIN
13 REG +12V
14 REG -12V
15 GND
IC9 AN79L05
RA1 EXBF9E103J 10K X8
RA2 EXBF9E103J 10KX8
Y/C/CMPNT SW8 VSS0119 COM Y/C
REC INH SW11 VSS0119 COM ON
CF SW7 VSS0119 COM 2F 4F
SYNC SW6 VSS0243 COM EXT INT
STD/AUTO SW9 VSS0119 COM STD
REMOTE SW10 VSS0119 COM REM1
LIMITER SW4 VSS0119 COM ON
DOLBY SW5 VSS0119 COM ON
IC4 MC14021BCP
IC5 MC14021BCP
IC6 MC14050BF
IC6 MC14050BCP
IC6 MC14053BCP
D4 MA165
D5 MA165
AU-66S
D1 MA165 D2 MA165 D3 MA165 D6 MA165
Q2 UN1213
Q3 2SD636
Q4 2SD636
CN132
VJP1237T
1 +5V
2 -7.5V
3 SERIAL DATA FRT
4 SERIAL CLK
5 STRB CLK16
6 AUTO OFF LED
7 EJECT LED
8 DOLBY SW
9 GND
10 (12P LINE)
CN135
VJP1233T
1 EJECT SW
2 EJECT LED
3 +5V
4 GND
5 AUTO OFF LED
6 +5V
CN133
VJP1237R
1 (TAPE SW)
2 (PLAY HEAD SW)
3 (LINE SW)
4 (COM LED)
5 (Y/C LED)
6 REM SW
7 REM1 LED
8 REM2 LED
9 +5V
10 GND
AU-65, 65H, 66H ONLY
AU-66H ONLY
AU-65, 65H, 66H ONLY
CN137
VJP1232T
1 CH2 LINE
2 GND (CH2)
3 AUDIO MUT
4 CH1 LINE
5 GND (CH1)
CN138
VJP1237T
1 CH3 LINE
2 GND (CH3)
3 CH4 LINE
4 GND (CH4)
5 CH3 PB VR(-)
6 CH3 PB VR(+)
7 GND
8 CH4 PB VR4(-)
9 CH4 PB VR(+)
10 GND
IC104 AN78L09
IC105 AN79L09
NJM4558D
IC101 IC102 IC103
Q101 2SD636 Q103 2SD636 Q105 2SD636 Q107 2SD636
Q102 2SD1330 Q104 2SD1330 Q106 2SD1330 Q108 2SD1330
D101 OA95 D102 OA95
CN139
VJP1234T
+14.5V 1
-14.5V 2
GND 3
CH1 METER OUT 4
CH2 METER OUT 5
CH3 METER OUT 6
CH4 METER OUT 7
CH3 PB LEVEL
CH4 PB LEVEL
MANUAL
PRESET
VSS0119
SW1
SW2
EVUF2AE20A14
AU-66H, 65H : NOT USED

	AU-65 AU-65H AU-66H	AU-63 AU-63H	AU-62 AU-62H
C12	0.01	0	0
C15	0.01	0	0.01
C16	0.01	0	0
D5	MA165	——	——

REVERSE SIDE **AUDIO I/O SCHEMATIC DIAGRAM**

TYPE \ MODEL	AU-65H	AU-63H	AU-62H
NTSC	VEP80553D	VEP80553C	VEP80553B
PAL	VEP80631D	VEP80631B	VEP80631C

FRONT INTERFACE SCHEMATIC DIAGRAM(FOR PAL)

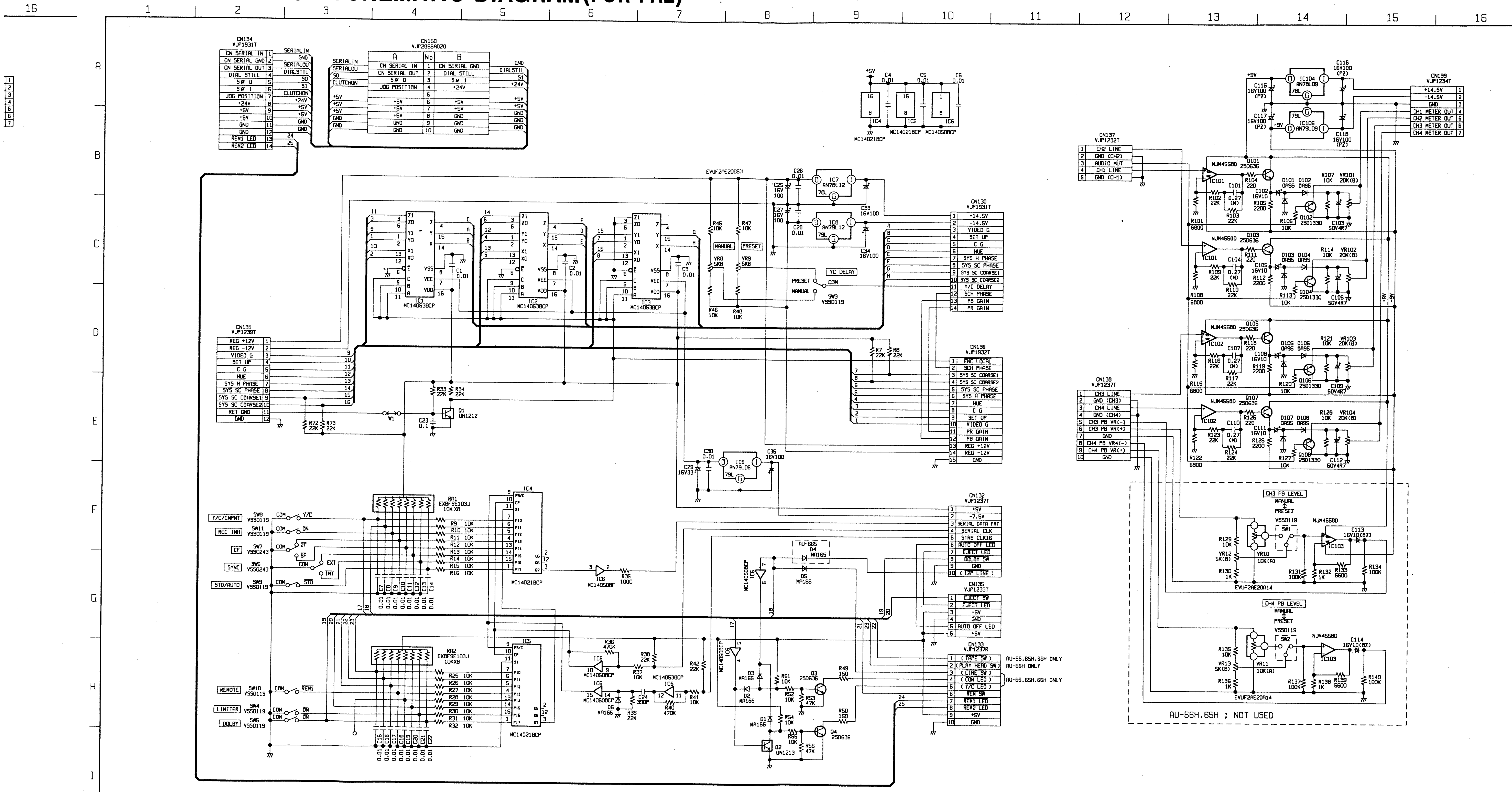

16
1
2
3
4
5
6
7
8
9
10
11
12
13
14
15
16
A
B
C
D
E
F
G
H
I
J
CN134 VJP1931T
CN SERIAL IN
CN SERIAL GND
CN SERIAL OUT
DIAL STILL
5∅ 0
5∅ 1
JOG POSITION
+24V
+5V
GND
REM1 LED
REM2 LED
SERIALIN
SERIALOU
DIALSTIL
CLUTCHON
CN150 VJP2856A020
A
No
B
CN SERIAL GND
DIAL STILL
+24V
+5V
GND
CN131 VJP1239T
REG +12V
REG -12V
VIDEO G
SET UP
C G
HUE
SYS H PHASE
SYS SC PHASE
SYS SC COARSE1
SYS SC COARSE2
RET GND
IC1 MC14053BCP
IC2 MC14053BCP
IC3 MC14053BCP
C1 0.01
C2 0.01
C3 0.01
R33 22K
R34 22K
Q1 UN1212
C23 0.1
W1
R72 22K
R73 22K
EVUF2AE20B53
R45 10K
R47 10K
MANUAL
PRESET
VR8 5KB
VR9 5KB
R46 10K
R48 10K
IC7 AN78L12
IC8 AN79L12
C25 16V 100
C26 0.01
C27 16V 100
C28 0.01
C33 16V100
C34 16V100
YC DELAY
SW3 VSS0119
COM
+5V
C4 0.01
C5 0.01
C6 0.01
IC4 MC14021BCP
IC5 MC14021BCP
IC6 MC14050BCP
CN130 VJP1931T
+14.5V
-14.5V
VIDEO G
SET UP
C G
HUE
SYS H PHASE
SYS SC PHASE
SYS SC COARSE1
SYS SC COARSE2
Y/C DELAY
SCH PHASE
PB GAIN
PR GAIN
R7 22K
R8 22K
CN136 VJP1932T
ENC LOCAL
SCH PHASE
PR GAIN
PB GAIN
REG +12V
REG -12V
GND
C29 16V33
C30 0.01
IC9 AN79L05
C35 16V100
T/C/CMPNT
REC INH
CF
SYNC
STD/AUTO
SW8 VSS0119
SW11 VSS0119
SW7 VSS0243
SW6 VSS0243
SW9 VSS0119
Y/C
ON
2F
8F
EXT
INT
STD
RA1 EXBF9E103J 10K X8
R9 10K
R10 10K
R11 10K
R12 10K
R13 10K
R14 10K
R15 10K
R16 10K
C7 C8 C9 C10 C11 C12 C13 C14 0.01
IC4 MC14021BCP
IC6 MC14050BF
R35 1000
CN132 VJP1237T
+5V
-7.5V
SERIAL DATA FRT
SERIAL CLK
STRB CLK16
AUTO OFF LED
EJECT LED
DOLBY SW
(12P LINE)
AU-665
D4 MA165
D5 MA165
CN135 VJP1233T
EJECT SW
EJECT LED
AUTO OFF LED
REMOTE
LIMITER
DOLBY
SW10 VSS0119
SW4 VSS0119
SW5 VSS0119
REM1
RA2 EXBF9E103J 10KX8
R25 10K
R26 10K
R27 10K
R28 10K
R29 10K
R30 10K
R31 10K
R32 10K
C15 C16 C17 C18 C19 C20 C21 C22 0.01
IC5 MC14021BCP
R36 470K
R37 10K
R38 22K
R39 22K
R40 470K
R41 10K
R42 22K
C24 390P
D6 MA165
MC14050BCP
MC14053BCP
D1 MA165
D2 MA165
D3 MA165
R51 10K
R52 10K
R53 47K
R54 10K
R55 10K
R56 47K
R49 150
R50 150
Q2 UN1213
Q3 2SD636
Q4 2SD636
CN133 VJP1237R
(TAPE SW)
(PLAY HEAD SW)
(LINE SW)
(COM LED)
(Y/C LED)
REM SW
REM1 LED
REM2 LED
AU-65,65H,66H ONLY
AU-66H ONLY
AU-65,65H,66H ONLY
CN137 VJP1232T
CH2 LINE
GND (CH2)
AUDIO MUT
CH1 LINE
GND (CH1)
CN138 VJP1237T
CH3 LINE
GND (CH3)
CH4 LINE
GND (CH4)
CH3 PB VR(-)
CH3 PB VR(+)
CH4 PB VR4(-)
CH4 PB VR(+)
+9V
-9V
IC104 AN78L09
IC105 AN79L09
C115 16V100 (PZ)
C116 16V100 (PZ)
C117 16V100 (PZ)
C118 16V100 (PZ)
CN139 VJP1234T
+14.5V
-14.5V
CH1 METER OUT
CH2 METER OUT
CH3 METER OUT
CH4 METER OUT
NJM4558D
IC101
IC102
Q101 2SD636
Q102 2SD1330
Q103 2SD636
Q104 2SD1330
Q105 2SD636
Q106 2SD1330
Q107 2SD636
Q108 2SD1330
D101 D102 OA95
D103 D104 OA95
D105 D106 OA95
D107 D108 OA95
R107 10K
R114 10K
R121 10K
R128 10K
VR101 20K(B)
VR102 20K(B)
VR103 20K(B)
VR104 20K(B)
C103 50V4R7
C106 50V4R7
C109 50V4R7
C112 50V4R7
CH3 PB LEVEL
CH4 PB LEVEL
MANUAL
PRESET
VSS0119
SW1
SW2
VR10 10K(A)
VR11 10K(A)
VR12 5K(B)
VR13 5K(B)
IC103
C113 16V10(BZ)
C114 16V10(BZ)
R129 10K
R130 1K
R131 100K
R132 1K
R133 5600
R134 100K
R135 10K
R136 1K
R137 100K
R138 1K
R139 5600
R140 100K
EVUF2AE20A14
AU-66H,65H ; NOT USED

	AU-65 AU-65H AU-66H	AU-63 AU-63H	AU-62 AU-62H
C12	0.01	0	0
C15	0.01	0	0.01
C16	0.01	0	0
D5	MA165	——	——

TYPE \ MODEL	AU-65H	AU-63H	AU-62H
NTSC	VEP86107A	VEP86086A	VEP86086A
PAL	VEP86107B	VEP86086A	VEP86086A

FRONT PANEL A SCHEMATIC DIAGRAM 1/2

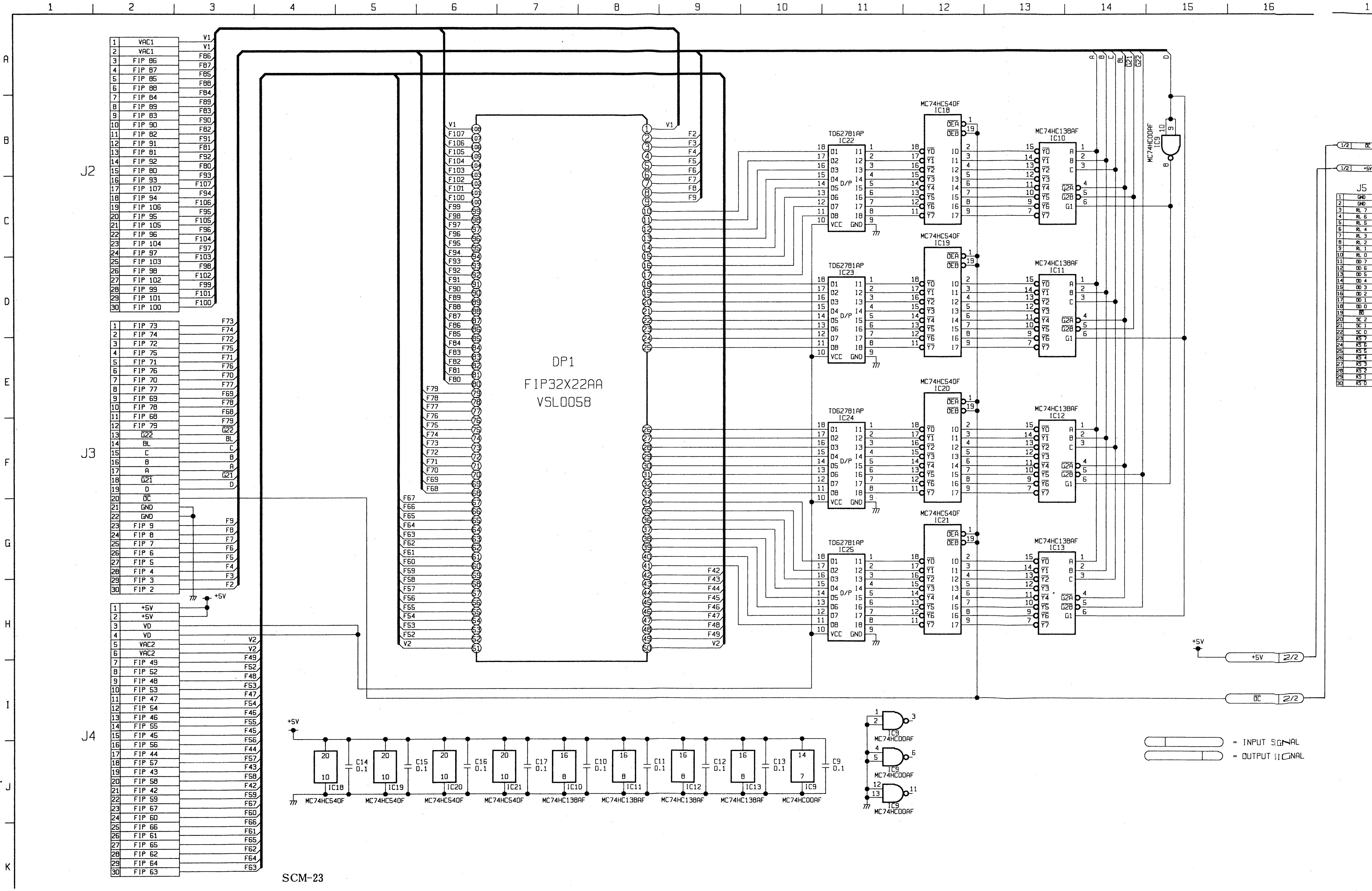
J2
J3
J4
J5
DP1
FIP32X22AA
VSL0058
TD62781AP IC22
TD62781AP IC23
TD62781AP IC24
TD62781AP IC25
MC74HC540F IC18
MC74HC540F IC19
MC74HC540F IC20
MC74HC540F IC21
MC74HC138AF IC10
MC74HC138AF IC11
MC74HC138AF IC12
MC74HC138AF IC13
MC74HC00AF IC9
C14 0.1
C15 0.1
C16 0.1
C17 0.1
C10 0.1
C11 0.1
C12 0.1
C13 0.1
C9 0.1
+5V
OC
2/2
= INPUT SIGNAL
= OUTPUT SIGNAL

FRONT PANEL A SCHEMATIC DIAGRAM 2/2

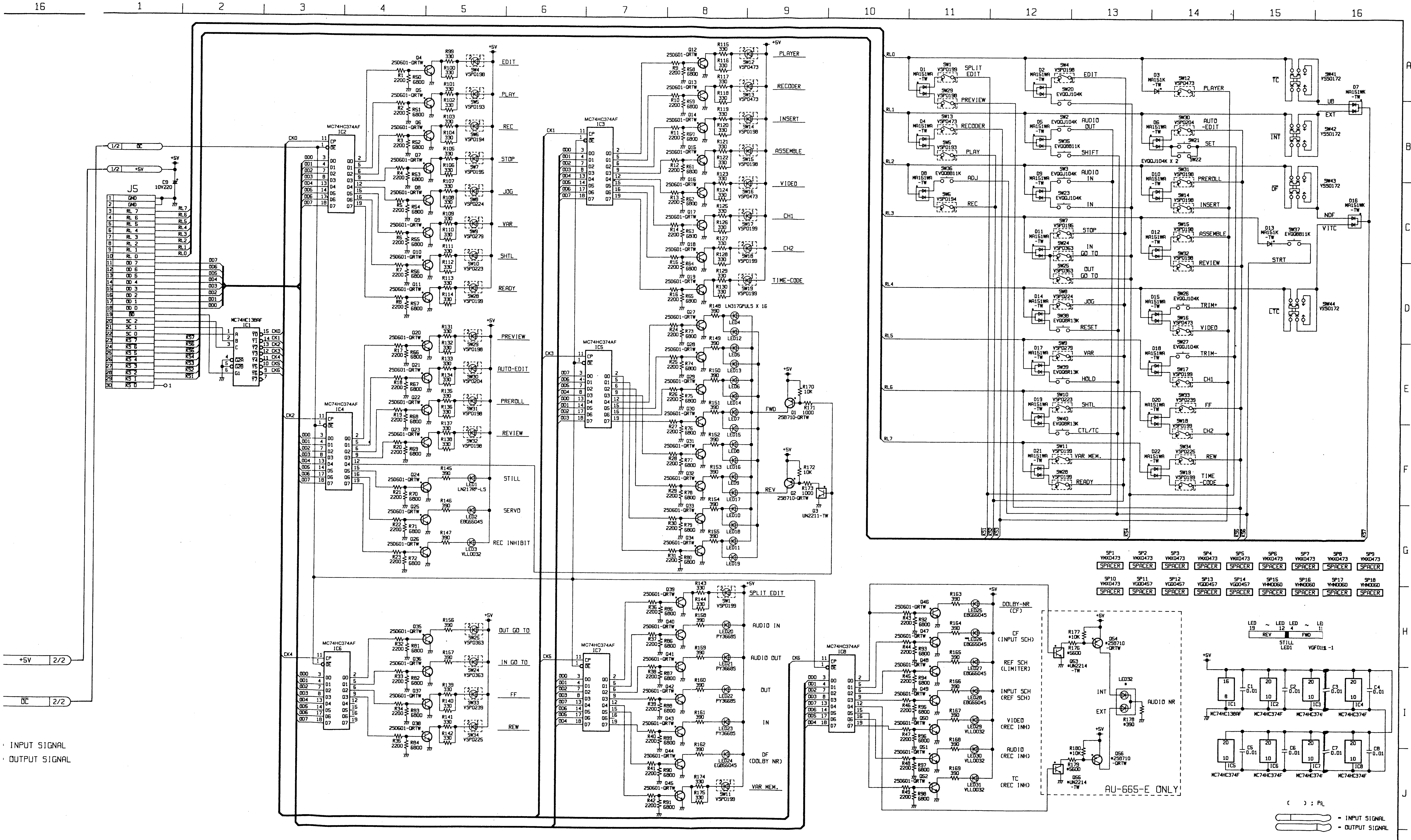

16
1
2
3
4
5
6
7
8
9
10
11
12
13
14
15
16
A
B
C
D
E
F
G
H
I
J
J5
1/2 DC
1/2 +5V
+5V
C9
10V220
GND
RL 7
RL 6
RL 5
RL 4
RL 3
RL 2
RL 1
RL 0
DD 7
DD 6
DD 5
DD 4
DD 3
DD 2
DD 1
DD 0
SC 2
SC 1
SC 0
KS 7
KS 6
KS 5
KS 4
KS 3
KS 2
KS 1
KS 0
MC74HC138AF
IC1
MC74HC374AF
IC2
IC3
IC4
IC5
IC6
IC7
IC8
CK0
CK1
CK2
CK3
CK4
CK5
CK6
2SD601-QRTW
EDIT
PLAY
REC
STOP
JOG
VAR
SHTL
READY
PREVIEW
AUTO-EDIT
PREROLL
REVIEW
STILL
SERVO
REC INHIBIT
OUT GO TO
IN GO TO
FF
REW
PLAYER
RECODER
INSERT
ASSEMBLE
VIDEO
CH1
CH2
TIME-CODE
LN317GPUL5 X 16
FWD
REV
2SB710-QRTW
UN2211-TW
SPLIT EDIT
AUDIO IN
AUDIO OUT
OUT
IN
DF
(DOLBY NR)
VAR MEM.
DOLBY-NR
(CF)
CF
(INPUT SCH)
REF SCH
(LIMITER)
INPUT SCH
(REF SCH)
VIDEO
(REC INH)
AUDIO
(REC INH)
TC
(REC INH)
INT
EXT
AUDIO NR
LED32
AU-665-E ONLY
SPLIT EDIT
RECODER
ADJ
AUDIO OUT
SHIFT
AUDIO IN
IN GO TO
OUT GO TO
RESET
HOLD
CTL/TC
VAR MEM.
AUTO -EDIT
SET
TRIM+
TRIM-
TIME -CODE
TC
INT
DF
NDF
VITC
STRT
LTC
UB
EXT
SP1 … SP18
SPACER
LED 19 ~ LED 12 LED 4 ~ LED
REV
FWD
STILL
LED1
MC74HC138AF
MC74HC374AF
( ) : PAL
= INPUT SIGNAL
= OUTPUT SIGNAL
INPUT SIGNAL
OUTPUT SIGNAL

FRONT PANEL B
SCHEMATIC DIAGRAM

TYPE \ MODEL	AU-65H	AU-63H	AU-62H
NTSC	VEP86108C	VEP86076E	VEP86076E
PAL	VEP86108D	VEP86076F	VEP86076F

FRONT PANEL B SCHEMATIC DIAGRAM 1/2

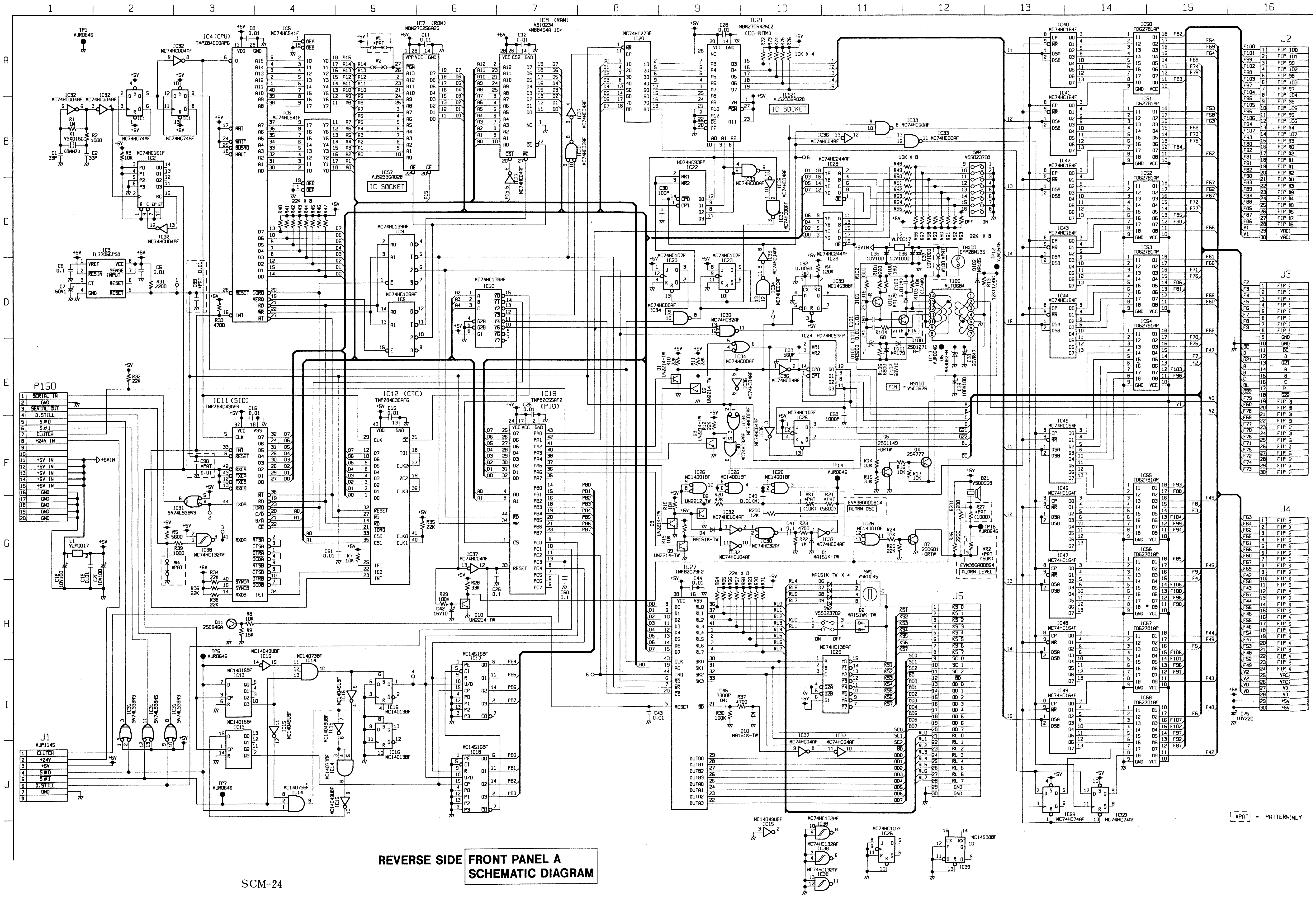

IC4 (CPU) TMPZ84C00AP6
IC5 MC74HC541F
IC6 MC74HC541F
IC7 (ROM) MBM27C256A25
IC8 (RAM) VS10234 <MB8464A-10>
IC20 MC74HC273F
IC21 MBM27C64252CZ (CG-ROM)
IC S7 VJS2336A028
IC SOCKET
IC S21 VJS2336A028
IC2 MC74HC161F
IC1 MC74HC74AF
IC32 MC74HCU04AF
X1 VSX0150 (8MHZ)
IC3 TL7705CPSB
IC9 MC74HC139AF
IC10 MC74HC138AF
IC11 (SIO) TMPZ84C43AP6
IC12 (CTC) TMPZ84C30AP6
IC19 TMP82C55AF2 (PIO)
IC22 HD74HC93FP
IC28 MC74HC244AF
IC33 MC74HC00AF
IC36 MC74HC04AF
IC23 MC74HC107F
IC24 HD74HC93FP
IC25 MC74HC107F
IC26 MC14001BF
IC27 TMP82C79F2
IC29 MC74HC138AF
IC30 MC74HC32AF
IC34 MC74HC00AF
IC35 MC74HC04AF
IC37 MC74HC04AF
IC38 MC74HC132AF
IC39 MC14538BF
IC13 MC14015BF
IC14 MC14073BF
IC15 MC14049UBF
IC16 MC14013BF
IC17 MC14516BF
IC18 MC14516BF
IC31 SN74LS38NS
IC40 – IC49 MC74HC164F
IC50 – IC58 TD62781AP
IC59 MC74HC74AF
SW1 VSR0045
SW2 VSS023702
SW4 VSS023708
T100 VLT0684
TH100 EYP2BN135
BZ1 VSD0558
HS100 VSC3626
EVM38GA00B14 ALARM OSC
EVM38GA00B54 ALARM LEVEL
P150
SERIAL IN
GND
SERIAL OUT
D.STILL
S#0
S#1
CLUTCH
+24V IN
+5V IN
J1 VJP1145
J2
J3
J4
J5
+5V
FIN
V1
V2
PAT = PATTERN ONLY

REVERSE SIDE **FRONT PANEL A SCHEMATIC DIAGRAM**

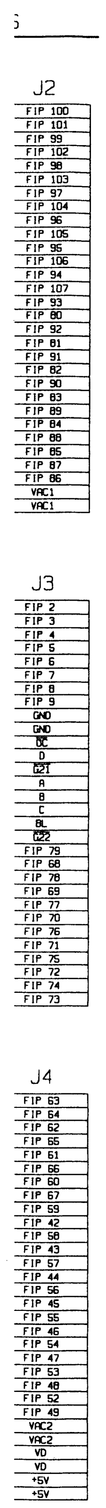
J2
FIP 100
FIP 101
FIP 99
FIP 102
FIP 98
FIP 103
FIP 97
FIP 104
FIP 96
FIP 105
FIP 95
FIP 106
FIP 94
FIP 107
FIP 93
FIP 80
FIP 92
FIP 81
FIP 91
FIP 82
FIP 90
FIP 83
FIP 89
FIP 84
FIP 88
FIP 85
FIP 87
FIP 86
VAC1
VAC1
J3
FIP 2
FIP 3
FIP 4
FIP 5
FIP 6
FIP 7
FIP 8
FIP 9
GND
GND
OC
D
G21
A
B
C
BL
G22
FIP 79
FIP 68
FIP 78
FIP 69
FIP 77
FIP 70
FIP 76
FIP 71
FIP 75
FIP 72
FIP 74
FIP 73
J4
FIP 63
FIP 64
FIP 62
FIP 65
FIP 61
FIP 66
FIP 60
FIP 67
FIP 59
FIP 42
FIP 58
FIP 43
FIP 57
FIP 44
FIP 56
FIP 45
FIP 55
FIP 46
FIP 54
FIP 47
FIP 53
FIP 48
FIP 52
FIP 49
VAC2
VAC2
VD
VD
+5V
+5V

TTERN ONLY

FRONT PANEL B SCHEMATIC DIAGRAM 2/2

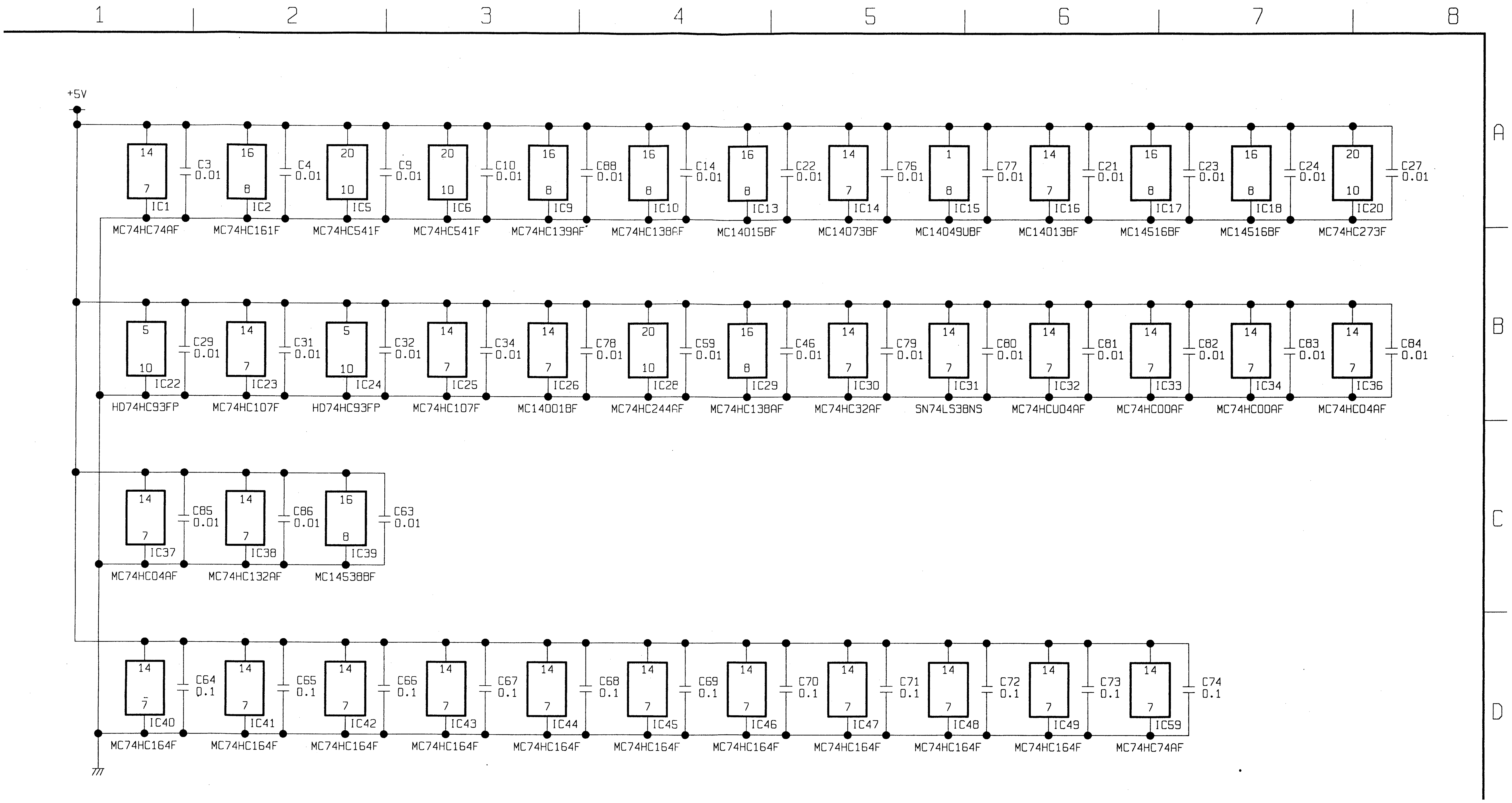
1
2
3
4
5
6
7
8
A
B
C
D
+5V
14 7 IC1 MC74HC74AF
C3 0.01
16 8 IC2 MC74HC161F
C4 0.01
20 10 IC5 MC74HC541F
C9 0.01
20 10 IC6 MC74HC541F
C10 0.01
16 8 IC9 MC74HC139AF
C88 0.01
16 8 IC10 MC74HC138AF
C14 0.01
16 8 IC13 MC14015BF
C22 0.01
14 7 IC14 MC14073BF
C76 0.01
1 8 IC15 MC14049UBF
C77 0.01
14 7 IC16 MC14013BF
C21 0.01
16 8 IC17 MC14516BF
C23 0.01
16 8 IC18 MC14516BF
C24 0.01
20 10 IC20 MC74HC273F
C27 0.01
5 10 IC22 HD74HC93FP
C29 0.01
14 7 IC23 MC74HC107F
C31 0.01
5 10 IC24 HD74HC93FP
C32 0.01
14 7 IC25 MC74HC107F
C34 0.01
14 7 IC26 MC14001BF
C78 0.01
20 10 IC28 MC74HC244AF
C59 0.01
16 8 IC29 MC74HC138AF
C46 0.01
14 7 IC30 MC74HC32AF
C79 0.01
14 7 IC31 SN74LS38NS
C80 0.01
14 7 IC32 MC74HCU04AF
C81 0.01
14 7 IC33 MC74HC00AF
C82 0.01
14 7 IC34 MC74HC00AF
C83 0.01
14 7 IC36 MC74HC04AF
C84 0.01
14 7 IC37 MC74HC04AF
C85 0.01
14 7 IC38 MC74HC132AF
C86 0.01
16 8 IC39 MC14538BF
C63 0.01
14 7 IC40 MC74HC164F
C64 0.1
14 7 IC41 MC74HC164F
C65 0.1
14 7 IC42 MC74HC164F
C66 0.1
14 7 IC43 MC74HC164F
C67 0.1
14 7 IC44 MC74HC164F
C68 0.1
14 7 IC45 MC74HC164F
C69 0.1
14 7 IC46 MC74HC164F
C70 0.1
14 7 IC47 MC74HC164F
C71 0.1
14 7 IC48 MC74HC164F
C72 0.1
14 7 IC49 MC74HC164F
C73 0.1
14 7 IC59 MC74HC74AF
C74 0.1

W0(MOTHER 1) P.C.BOARD

TYPE \ MODEL	AU-65H	AU-63H	AU-62H
NTSC	VEP80765A	VEP80765C	VEP80765B
PAL	VEP80765A	VEP80765C	VEP80765B

MOTHER
P. C. BOARD

COMPONENT SIDE			
CONNECTOR			
CN8	J-4	CN41	I-1
CN9	I-5	CN42	K-1
CN12	E-3	CN46	A-4
CN13	D-3	CN48	I-3
CN14	C-4	CN49	A-3
CN15	C-3	CN300	J-3
CN17	J-4	CN301	J-3
CN20	D-5	CN303	M-4
CN21	B-5	CN304	F-3
CN22	C-4	CN320	K-3
CN23	J-4	CN321	I-3
CN24	K-5	CN400	J-5
CN25	K-4	CN401	K-5
CN26	E-4	CN402	B-4
CN28	E-4	CN500	B-2
CN30	I-3	CN600	I-4
CN31	I-5	CN601	E-1
CN34	M-4	CN602	C-1
CN35	M-3		
CN36	E-3		
CN39	I-2		
CN40	A-2		

P.C. Board Location

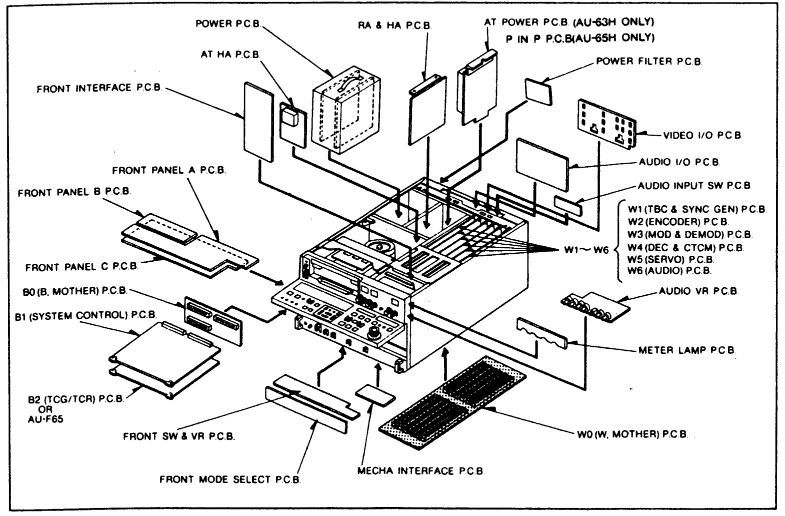
POWER P.C.B.
RA & HA P.C.B.
AT POWER P.C.B. (AU-63H ONLY)
P IN P P.C.B(AU-65H ONLY)
AT HA P.C.B.
POWER FILTER P.C.B.
FRONT INTERFACE P.C.B.
VIDEO I/O P.C.B.
AUDIO I/O P.C.B.
FRONT PANEL A P.C.B.
FRONT PANEL B P.C.B.
AUDIO INPUT SW P.C.B.
W1 (TBC & SYNC GEN) P.C.B.
W2 (ENCODER) P.C.B.
W3 (MOD & DEMOD) P.C.B.
W4 (DEC & CTCM) P.C.B.
W5 (SERVO) P.C.B.
W6 (AUDIO) P.C.B.
W1~W6
FRONT PANEL C P.C.B.
B0 (B, MOTHER) P.C.B.
AUDIO VR P.C.B.
B1 (SYSTEM CONTROL) P.C.B.
METER LAMP P.C.B.
B2 (TCG/TCR) P.C.B.
OR
AU-F65
FRONT SW & VR P.C.B.
W0 (W, MOTHER) P.C.B.
FRONT MODE SELECT P.C.B.
MECHA INTERFACE P.C.B.

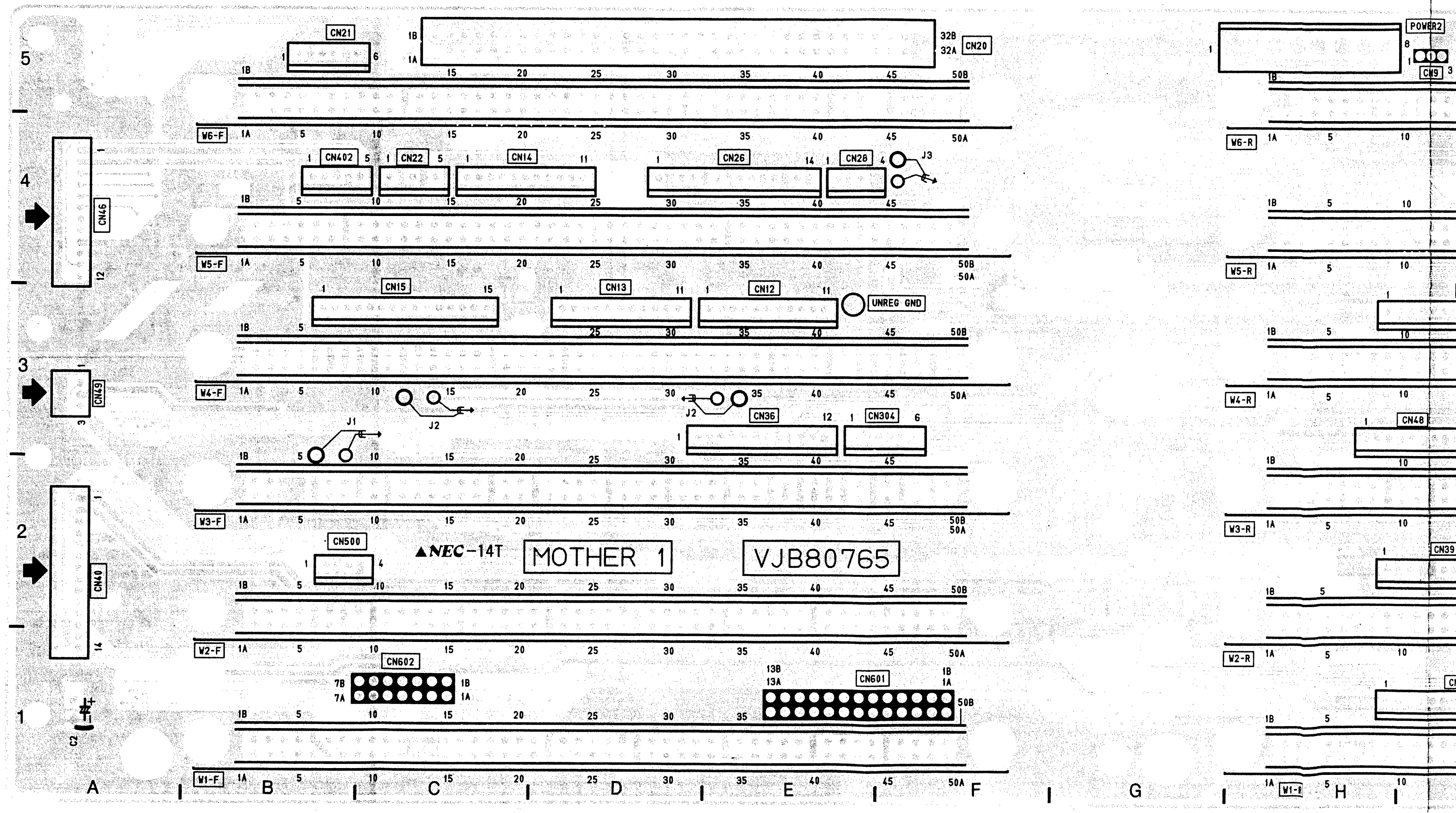
5
4
3
2
1
A
B
C
D
E
F
G
H
CN21
CN20
CN9
POWER2
W6-F
W6-R
CN402
CN22
CN14
CN26
CN28
J3
CN46
W5-F
W5-R
CN15
CN13
CN12
UNREG GND
CN49
W4-F
W4-R
J1
J2
CN36
CN304
CN48
W3-F
W3-R
CN500
▲NEC-14T
MOTHER 1
VJB80765
CN40
CN39
W2-F
W2-R
CN602
CN601
W1-F
W1-R

CHIP PART INFORMATION

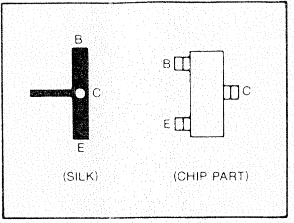
B
C
E
(SILK)
B
C
E
(CHIP PART)

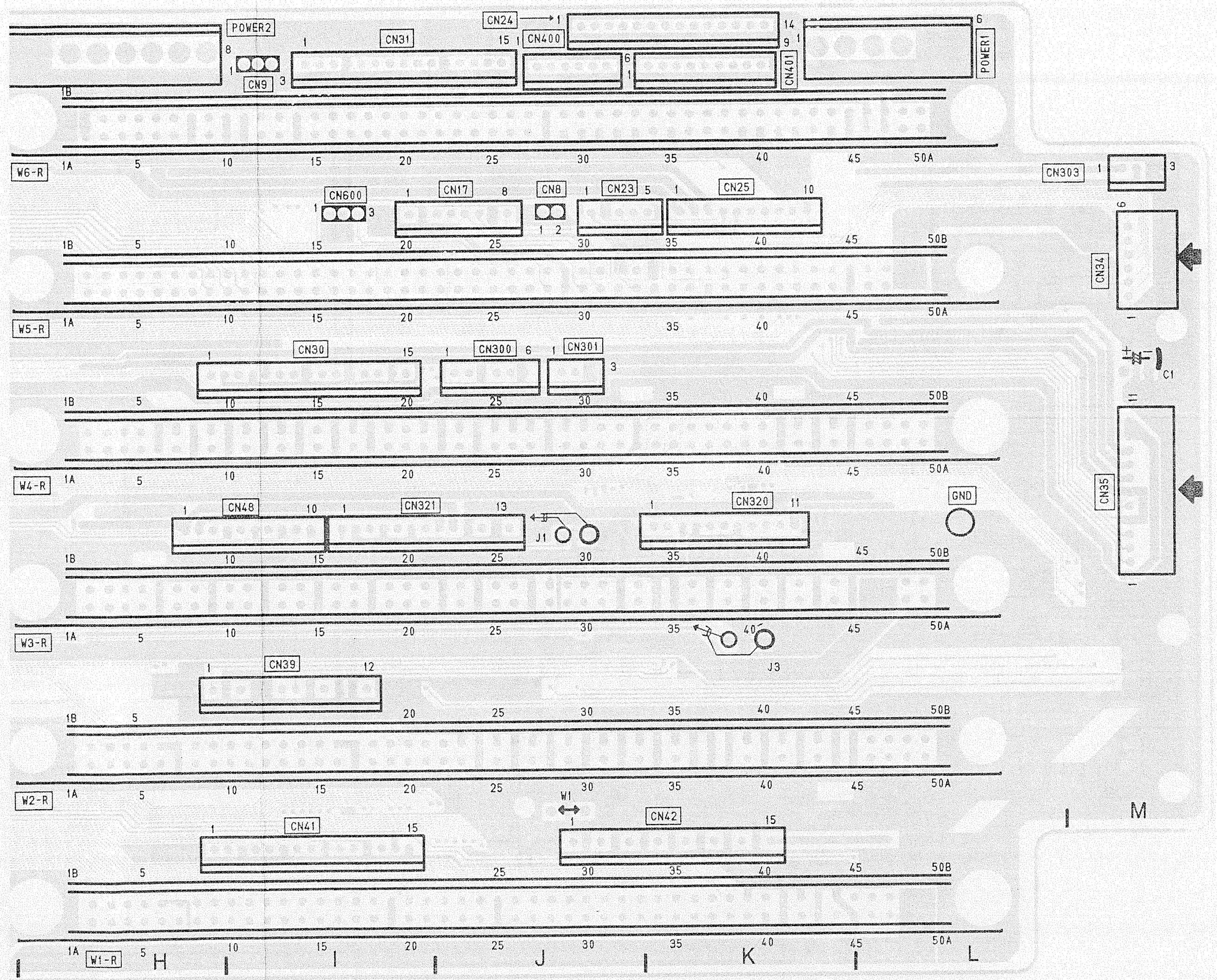
POWER2
CN9
CN31
CN24
CN400
CN401
POWER1
CN303
CN600
CN17
CN8
CN23
CN25
CN34
C1
CN30
CN300
CN301
CN35
CN48
CN321
J1
CN320
GND
J3
CN39
W1
CN41
CN42
W6-R
W5-R
W4-R
W3-R
W2-R
W1-R
1A
1B
50A
50B
H
I
J
K
L
M

(COMPONENT SIDE)

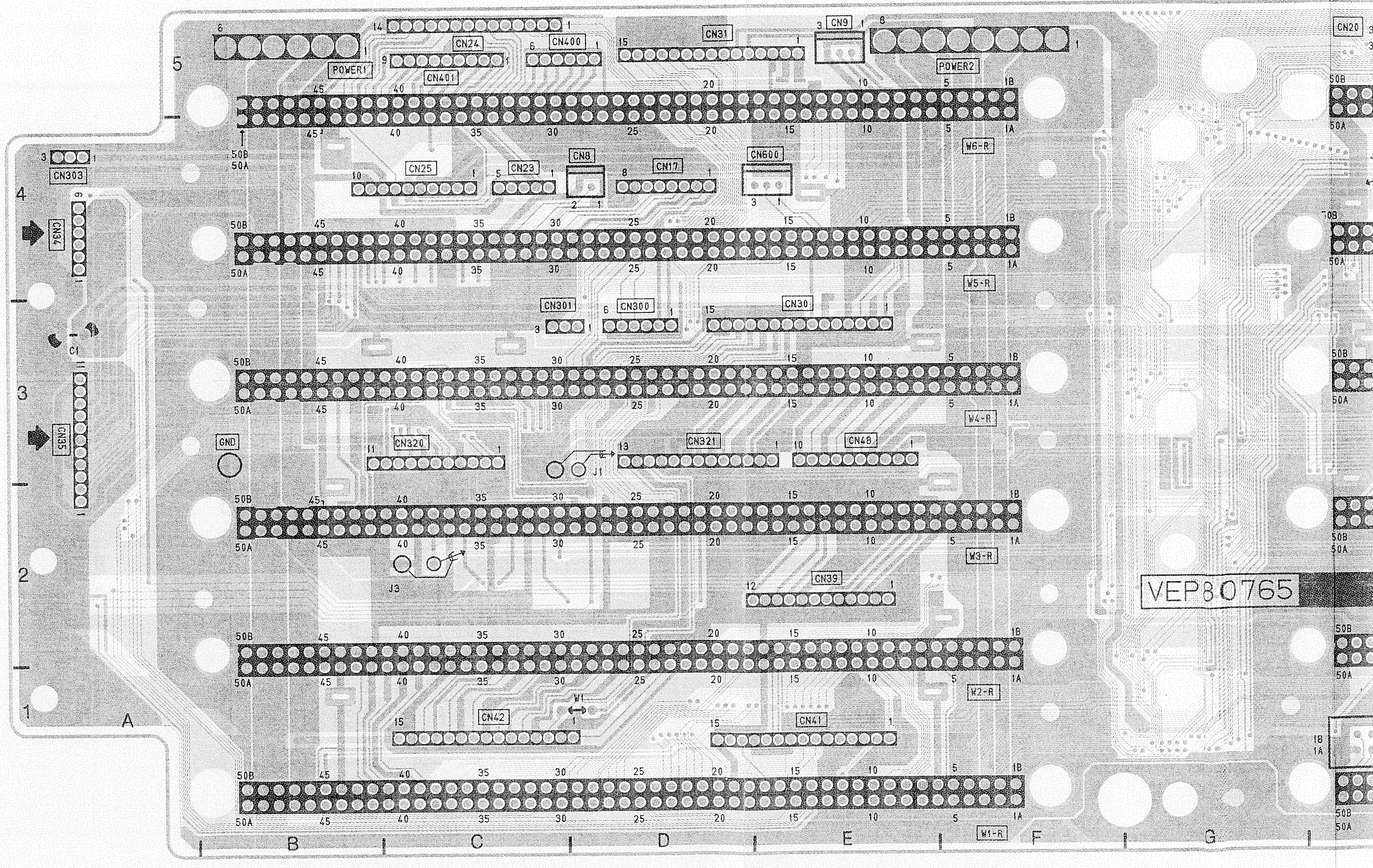
POWER1
CN24
CN401
CN400
CN31
CN9
POWER2
CN20
CN303
CN25
CN23
CN8
CN17
CN600
CN34
W6-R
W5-R
C1
CN301
CN300
CN30
CN35
GND
CN320
J1
CN321
CN48
W4-R
J3
CN39
W3-R
VEP80765
CN42
W1
CN41
W2-R
W1-R
1
2
3
4
5
A
B
C
D
E
F
G

W0 MOTHER 1 P.C.BO

CHIP PART INFORMATION

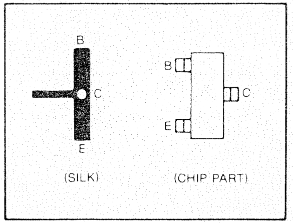

B
C
E
(SILK)
B
C
E
(CHIP PART)

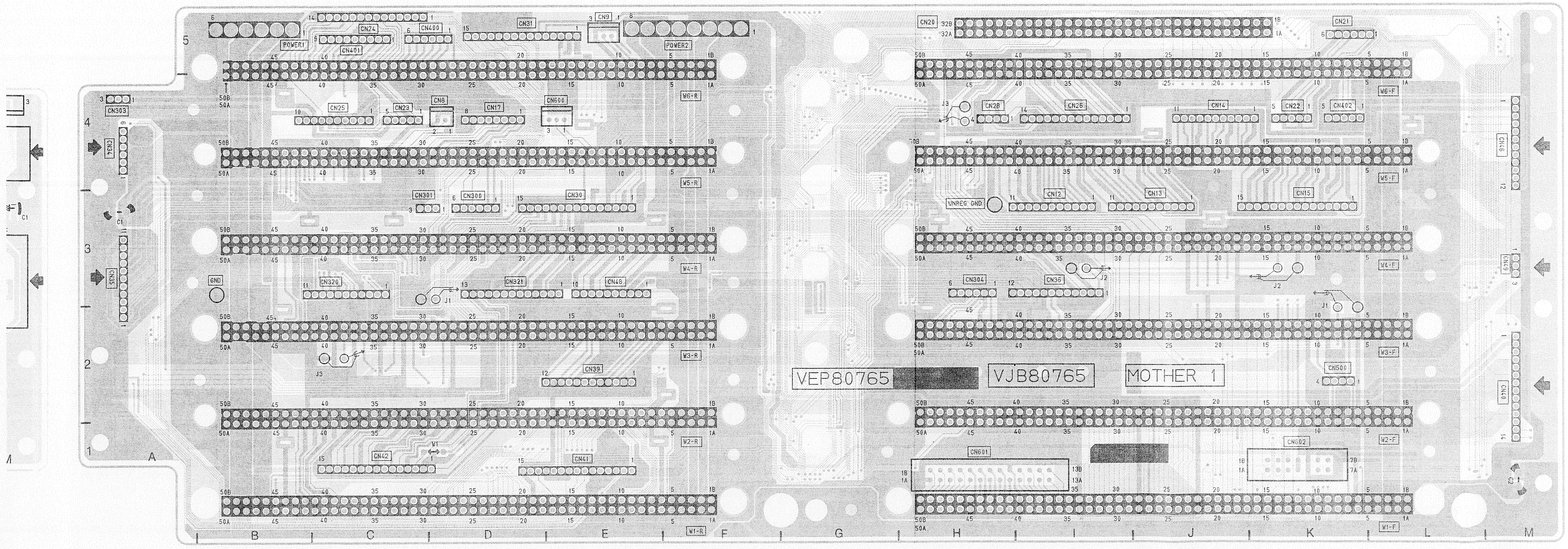

POWER1
POWER2
CN24
CN400
CN401
CN31
CN9
CN20
CN21
CN303
CN34
CN35
CN25
CN23
CN8
CN17
CN600
W6-R
CN301
CN300
CN30
W5-R
GND
CN320
J1
CN321
CN48
W4-R
J3
CN39
W3-R
CN42
W1
CN41
W2-R
W1-R
J3
CN28
CN26
CN14
CN22
CN402
W6-F
CN46
UNREG GND
CN12
CN13
CN15
W5-F
CN304
CN36
J2
J1
W4-F
CN49
VEP80765
VJB80765
MOTHER 1
CN500
W3-F
CN40
CN601
CN602
W2-F
W1-F
C1
C2
50B
50A
1B
1A
A
B
C
D
E
F
G
H
I
J
K
L
M
1
2
3
4
5

(FOIL SIDE)

REVERSE SIDE

W1 TBC & SYNC GEN P.C.BOAR

W1(TBC & SYNC GEN) P.C.BOARD

MODEL / TYPE	AU-65H	AU-63H	AU-62H
NTSC	VEP88091A	VEP88091A	VEP88091A
PAL	VEP88091C	VEP88091C	VEP88091C

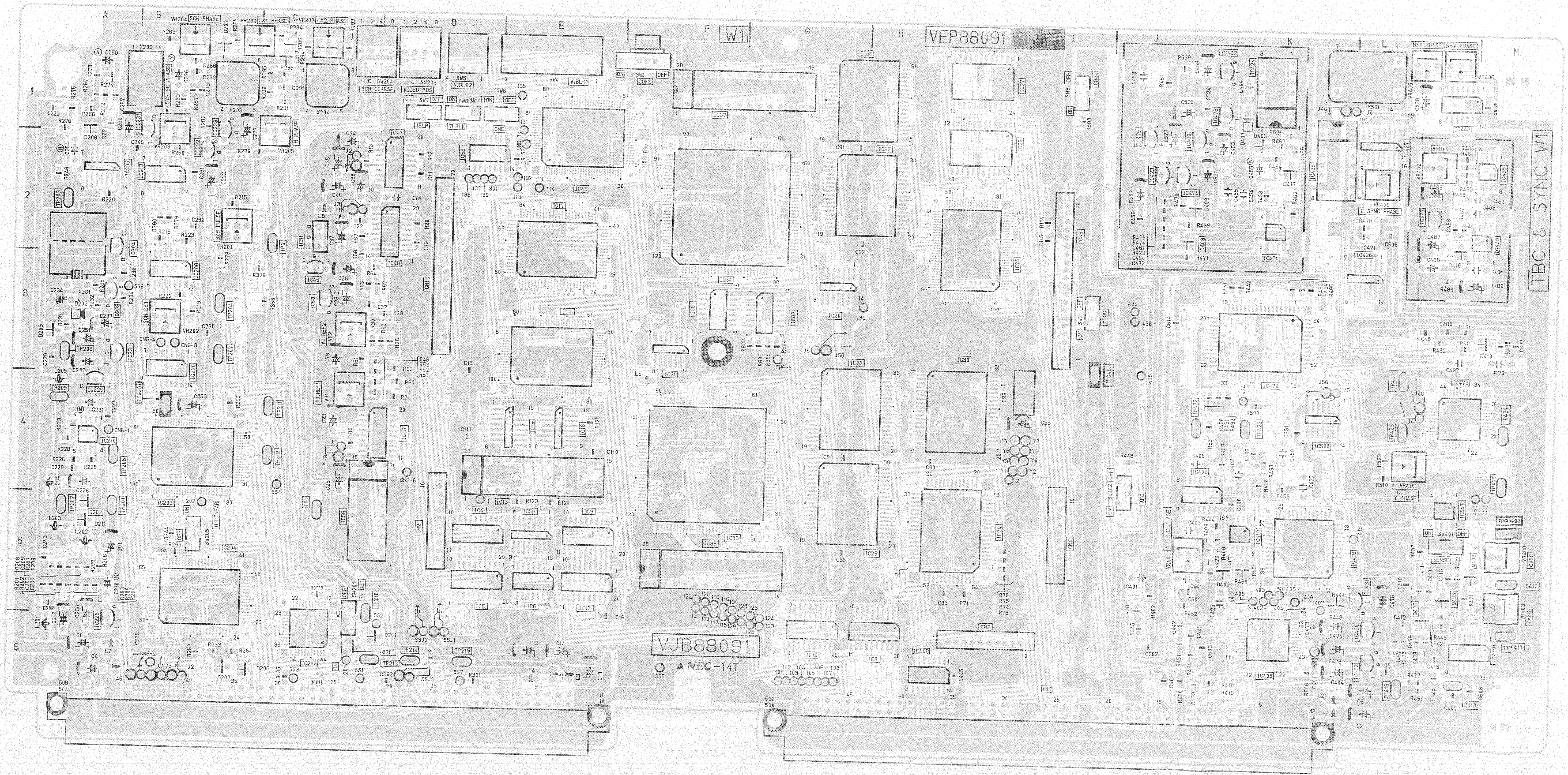

W1
VEP88091
TBC & SYNC W1
VJB88091
NEC-14T

(COMPONENT SIDE)

CHIP PART INFORMATION

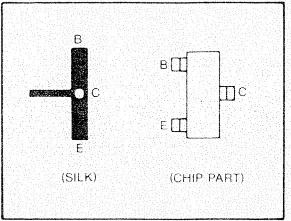
B
C
E
B
C
E
(SILK)
(CHIP PART)

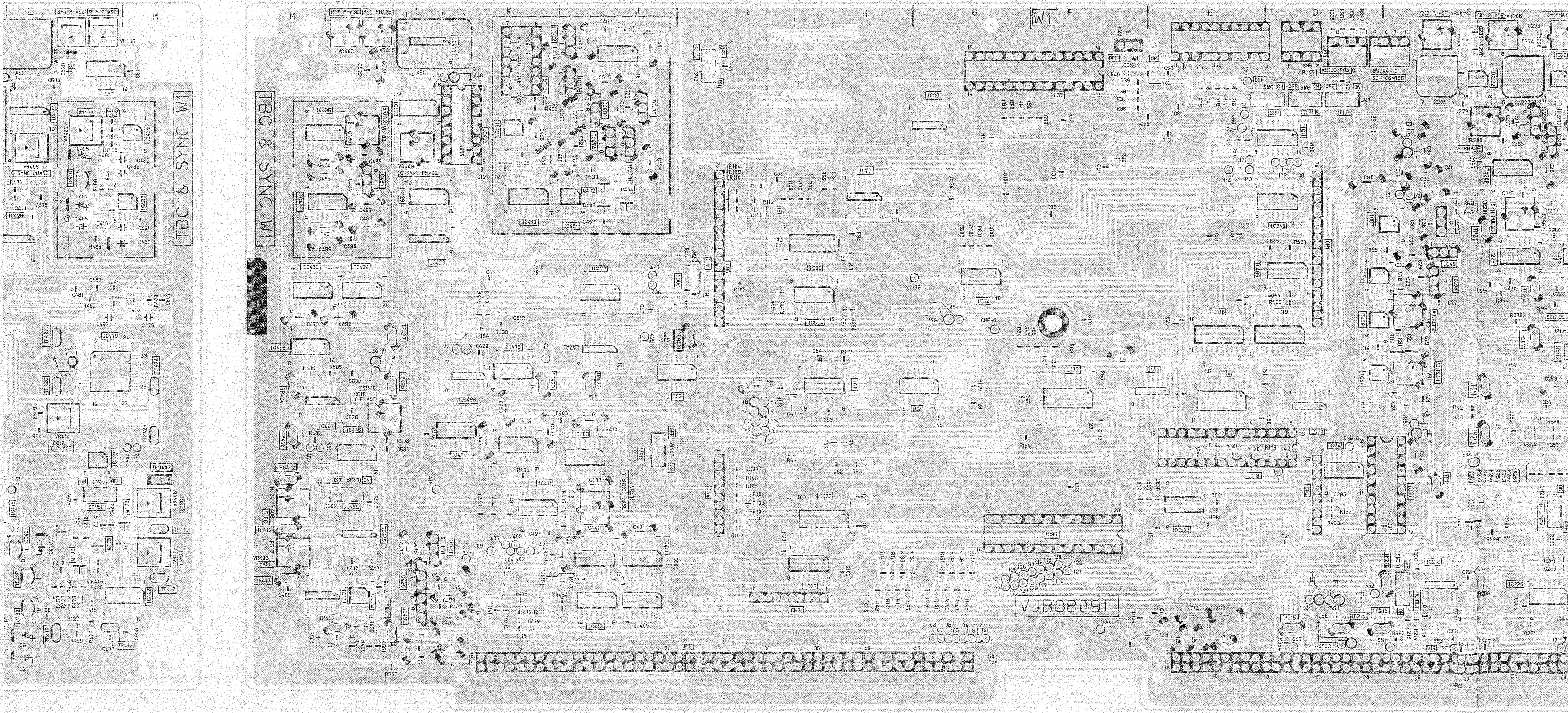
TBC & SYNC W1
TBC & SYNC W1
W1
VJB88091
C SYNC PHASE
CCIR Y PHASE
R-Y PHASE
B-Y PHASE
H PHASE
SCH COARSE
VIDEO POS
V.BLK1
V.BLK2

MPONENT SIDE)

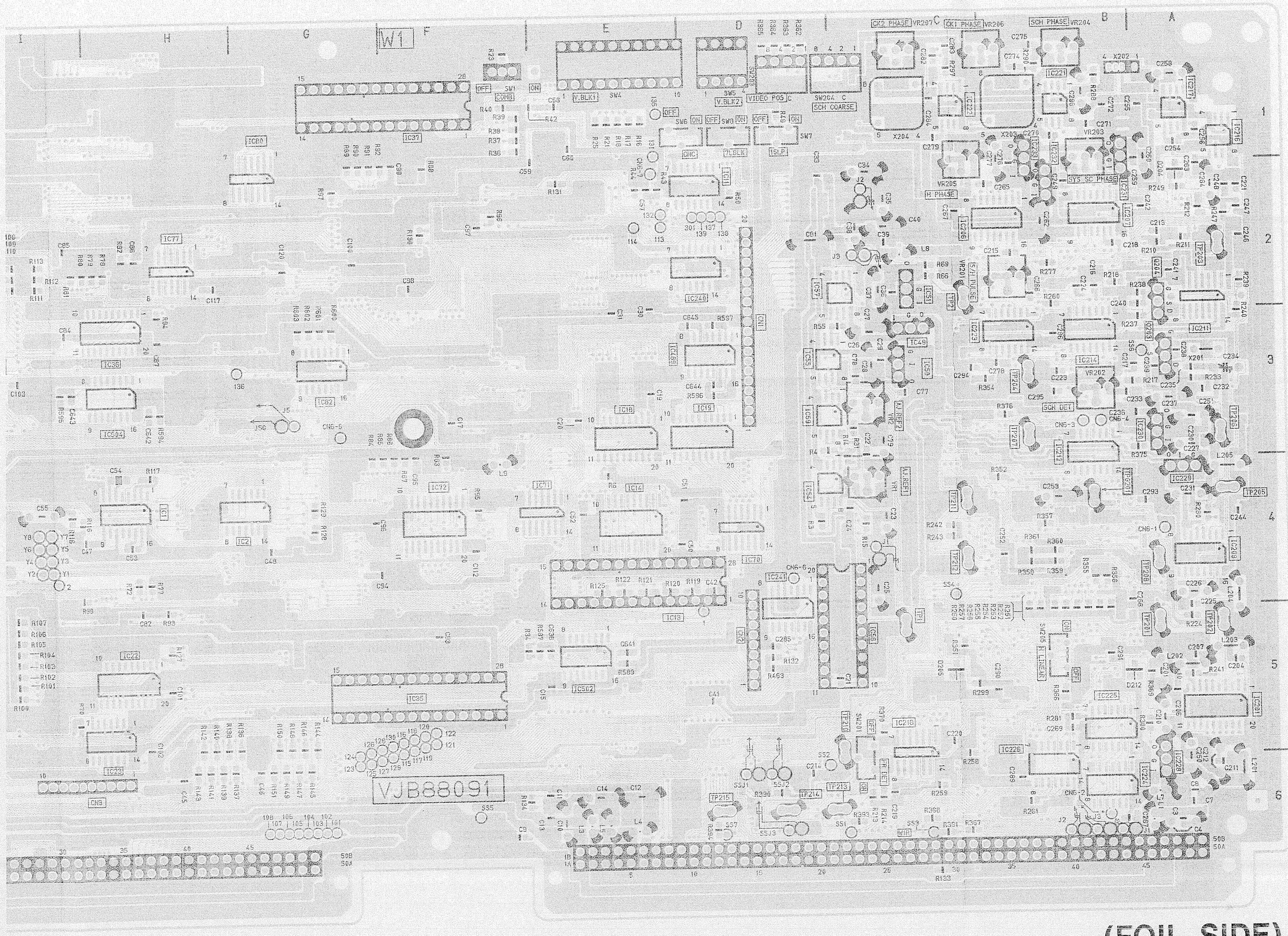
I
H
G
W1
F
E
D
C
B
A
1
2
3
4
5
6
CK2 PHASE
CK1 PHASE
SCH PHASE
VIDEO POS
SCH COARSE
H PHASE
SYS SC PHASE
V.BLK1
V.BLK2
VJB88091

(FOIL SIDE)

P.C. Board Location

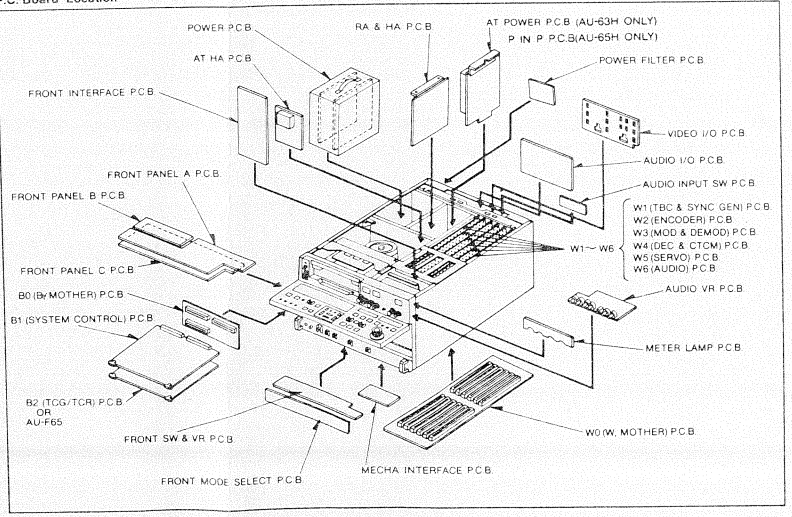
POWER P.C.B
RA & HA P.C.B
AT POWER P.C.B (AU-63H ONLY)
P IN P P.C.B(AU-65H ONLY)
AT HA P.C.B
POWER FILTER P.C.B
FRONT INTERFACE P.C.B
VIDEO I/O P.C.B
AUDIO I/O P.C.B
FRONT PANEL A P.C.B
AUDIO INPUT SW P.C.B
FRONT PANEL B P.C.B
W1 (TBC & SYNC GEN) P.C.B
W2 (ENCODER) P.C.B
W3 (MOD & DEMOD) P.C.B
W4 (DEC & CTCM) P.C.B
W5 (SERVO) P.C.B
W6 (AUDIO) P.C.B
W1~W6
FRONT PANEL C P.C.B
AUDIO VR P.C.B
B0 (B/MOTHER) P.C.B
B1 (SYSTEM CONTROL) P.C.B
METER LAMP P.C.B
B2 (TCG/TCR) P.C.B
OR
AU-F65
W0 (W, MOTHER) P.C.B
FRONT SW & VR P.C.B
MECHA INTERFACE P.C.B
FRONT MODE SELECT P.C.B

TBC & SYNC P.C.BOARD

COMPONENT SIDE								FOIL SIDE			
TRANSISTOR		IC56	C-5	TESTR POINT		VR408	M-5	TRANSISTOR		IC409	J-6
Q201	C-6	IC58	D-2	TP1	C-5	VR409	L-2	Q402	J-2	IC411	K-5
Q202	A-5	IC81	F-3	TP2	C-2	VR410	L-4	Q404	J-2	IC412	J-6
Q203	A-3	IC83	G-3	TP201	A-5					IC413	K-4
Q204	A-2	IC202	C-6	TP202	A-5	CONNECTOR		INTEGRATED CIRCUIT		IC415	J-5
Q403	J-2	IC203	B-4	TP203	A-2	CN1	D-3			IC418	J-1
Q405	L-5	IC204	B-5	TP204	B-3	CN2	D-5	IC1	H-4	IC419	K-2
Q406	M-5	IC205	A-2	TP205	A-4	CN3	I-6	IC2	G-4	IC421	K-2
Q408	L-5	IC208	B-3	TP206	A-3	CN4	I-5	IC3	I-4	IC428	L-3
		IC210	A-4	TP207	B-3	CN5	I-2	IC11	D-2	IC429	L-2
INTEGRATED CIRCUIT		IC213	B-2	TP208	A-4			IC14	E-4	IC433	M-3
		IC220	B-3	TP210	C-5			IC18	E-3	IC434	L-3
IC4	D-5	IC228	A-6	TP211	C-4			IC19	D-3	IC436	M-2
IC5	D-5	IC229	A-4	TP212	C-4			IC22	H-5	IC439	M-2
IC6	E-5	IC230	A-3	TP213	D-6			IC23	H-5	IC441	L-6
IC7	E-3	IC231	B-1	TP214	D-6			IC36	H-3	IC444	L-6
IC8	H-6	IC232	B-2	TP215	D-6			IC54	D-4	IC445	L-5
IC9	E-5	IC233	B-1	TP412	M-5			IC55	D-3	IC446	L-4
IC10	G-6	IC402	J-4	TP413	L-6			IC57	C-2	IC471	J-3
IC12	E-5	IC405	K-6	TP416	L-6			IC59	D-3	IC472	L-3
IC13	E-4	IC410	K-5	TP417	M-5			IC70	D-4	IC473	K-4
IC15	E-4	IC416	K-5	TP422	J-4			IC71	E-4	IC477	L-1
IC16	E-4	IC420	K-2	TP423	K-4			IC72	F-4	IC478	L-1
IC17	E-2	IC422	J-1	TP424	M-4			IC77	H-2	IC481	J-2
IC20	G-3	IC423	J-2	TP425	M-4			IC80	G-2	IC489	D-3
IC21	F-3	IC424	K-1	TP426	L-4			IC82	G-3	IC497	M-4
IC24	H-5	IC425	K-2	TP427	L-3			IC201	A-5	IC498	M-3
IC25	H-2	IC426	L-2					IC206	B-2	IC499	K-4
IC26	H-1	IC427	L-1	TPG201	B-4			IC207	B-2	IC502	E-5
IC27	H-1	IC430	L-5	TPG401	I-3			IC209	A-4	IC504	H-3
IC28	G-4	IC431	L-5	TPG402	M-5			IC211	A-2		
IC29	G-4	IC432	L-6					IC212	B-3		
IC30	H-4	IC435	M-2	ADJUSTMENT				IC214	B-3		
IC31	G-1	IC437	L-2	VR1	C-4			IC216	A-1		
IC32	G-2	IC438	M-2	VR2	C-3			IC217	A-1		
IC33	F-4	IC442	M-6	VR201	B-2			IC218	C-5		
IC34	F-2	IC443	L-1	VR202	B-3			IC221	B-1		
IC35	F-5	IC447	L-4	VR203	B-2			IC222	C-1		
IC37	F-1	IC448	H-6	VR204	B-1			IC223	B-3		
IC45	E-2	IC470	K-3	VR205	C-2			IC224	B-6		
IC46	D-4	IC474	J-2	VR206	B-1			IC225	B-5		
IC47	D-2	IC475	J-1	VR207	C-1			IC226	B-6		
IC48	D-2	IC476	J-1	VR401	J-5			IC240	D-2		
IC49	C-3	IC479	L-4	VR402	L-2			IC241	D-4		
IC50	C-3	IC480	J-1	VR403	M-5			IC401	J-5		
IC51	C-2	IC500	K-4	VR405	L-1			IC403	J-4		
IC53	E-5			VR406	L-1			IC404	K-4		

W2 (ENCODER)

COMPONENT SIDE

Transistors	
Q1	L-4
Q7	I-4
Q9	I-4
Q10	J-6
Q11	I-4
Q14	L-6
Q20	L-5
Q21	J-6
Q22	L-5
Q26	K-4
Q28	M-4
Q200	A-3
Q203	A-2
Q204	A-2
Q205	A-2
Q207	A-1
Q212	B-1
Q219	A-4
Q223	A-4
Q224	B-4
Q234	B-3
Q237	B-3
Q241	A-5
Q242	B-5
Q252	B-5
Q255	B-5
Q262	F-1
Q263	F-1
Q265	E-1
Q266	B-6
Q285	D-2
Q288	A-3
Q289	C-4
Q291	A-5
Q501	A-2
Q503	A-2
Q504	B-2
Q507	C-2
Q514	E-2
Q515	E-2
Q519	D-4
Q522	C-5
Q523	C-5
Q524	C-5
Q535	F-3
Q536	F-3
Q538	E-4
Q539	E-4
Q540	E-4
Q541	E-4
Q544	E-4
Q546	D-2
Q550	E-4
Q803	K-1
Q807	J-1
Q812	H-1
Q813	H-2
Q814	H-1
Q815	H-1

Integrated Circuits	
IC1	M-4
IC2	I-3
IC4	I-4
IC7	H-5
IC8	I-6
IC10	L-5
IC13	K-5
IC14	I-6
IC15	M-6
IC16	J-6
IC17	L-6
IC18	J-6
IC19	G-6
IC26	L-3
IC27	L-3
IC28	K-3
IC29	K-3
IC30	J-3
IC32	I-3
IC33	I-3
IC200	B-2
IC201	B-2
IC202	C-4
IC203	C-3
IC204	C-5
IC205	C-5
IC207	B-1
IC208	C-4
IC209	B-4
IC210	B-5
IC211	G-6
IC216	G-1
IC217	F-2
IC502	C-1
IC503	E-1
IC505	D-4
IC506	F-1
IC507	F-5
IC508	F-4
IC509	F-2
IC512	E-3
IC513	G-4
IC516	E-3
IC517	C-3
IC518	C-3
IC519	F-6
IC520	G-6
IC521	E-3
IC522	E-2
IC823	E-5
IC800	J-1
IC802	H-2
IC803	H-1
IC804	L-1
IC805	I-1
IC807	L-2
IC809	K-2
IC810	J-2
IC811	J-2
IC813	I-2
IC814	I-1
IC817	I-2
IC818	M-2
IC819	I-3
IC820	J-3
IC821	J-3
IC822	M-2

Test Points	
TP1	L-4
TP2	K-5
TP3	I-5
TP4	K-5
TP6	L-1
TP7	L-1
TP201	A-1
TP202	C-2
TP203	C-4
TP204	C-5
TP206	I-1
TP207	I-1
TP501	B-3
TP502	C-2
TP503	E-2
TP505	C-4
TP506	D-5
TP507	D-2
TP800	L-1
TP801	K-1
TP802	L-1
TP803	K-2
TP804	L-2
TP805	I-2

TP GND	
TPG1	K-3
TPG2	I-5
TPG201	B-3
TPG501	E-2

Adjustments	
VR1	K-4
VR2	K-4
VR3	M-5
VR4	K-5
VR200	B-1
VR201	B-1
VR202	B-1
VR203	B-4
VR204	B-4
VR205	B-5
VR206	B-6
VR207	B-3
VR208	B-5
VR209	B-5
VR210	G-1
VR211	A-3
VR212	C-4
VR213	A-5
VR501	B-2
VR502	B-3
VR503	C-1
VR504	E-1
VR505	D-1
VR506	E-1
VR507	C-5
VR508	C-5
VR509	D-5
VR510	F-5
VR511	E-5
VR512	J-1
VR513	F-3
VR514	F-3
VR515	F-4
VR516	E-4
VR517	J-1
VR800	K-1
VR801	K-1
VR802	L-2
VR803	J-2
VR805	K-2

Others	
VC201	A-1
VC501	B-3
CN1	H-6
CN2	H-5
CN3	H-5
CN4	H-4
CN5	H-3

FOIL SIDE

Transistor	
Q2	L-4
Q3	K-4
Q4	J-4
Q5	I-4
Q6	I-4
Q8	I-4
Q12	J-4
Q13	L-6
Q15	M-5
Q16	L-5
Q17	L-5
Q18	L-5
Q19	L-5
Q23	L-5
Q24	L-3
Q25	K-4
Q27	M-4
Q201	A-2
Q202	A-2
Q206	A-2
Q208	A-1
Q209	A-1
Q210	A-1
Q211	B-1
Q213	B-2
Q214	B-2
Q215	A-3
Q220	A-4
Q221	A-3
Q222	A-4
Q225	A-4
Q226	A-4
Q227	B-4
Q229	B-4
Q230	B-4
Q232	A-3
Q233	B-3
Q235	B-3
Q236	B-4
Q238	A-5
Q239	A-5
Q240	A-5
Q243	A-6
Q244	A-5
Q245	B-6
Q246	B-5
Q247	B-5
Q248	B-5
Q249	A-6
Q250	A-4
Q251	B-4
Q253	B-5
Q254	B-5
Q256	G-1
Q257	G-1
Q258	E-5
Q259	C-1
Q260	D-2
Q261	D-2
Q267	A-4
Q284	B-4
Q286	B-1
Q287	B-1
Q290	C-4
Q292	F-1
Q502	A-2
Q505	B-3
Q506	B-3
Q508	C-2
Q509	C-2
Q516	E-2
Q518	D-4
Q520	C-4
Q521	C-5
Q525	D-5
Q526	C-5
Q527	D-5
Q528	C-5
Q532	F-5
Q533	C-4
Q534	F-4
Q537	F-4
Q542	E-4
Q543	E-4
Q545	D-2
Q547	D-2
Q548	C-2
Q549	E-4
Q551	E-2
Q552	E-2
Q800	I-1
Q801	J-2
Q802	K-1
Q804	K-2
Q806	J-1
Q808	G-2
Q809	G-2
Q810	G-1
Q811	G-1
Q816	J-2
Q817	J-2
Q818	K-1
Q819	K-1

Integrated Circuits	
IC3	J-4
IC5	J-4
IC6	I-5
IC9	K-5
IC11	L-5
IC12	K-5
IC206	A-2
IC215	C-3
IC501	B-3
IC504	D-4
IC510	G-5
IC511	E-5
IC514	G-5
IC524	E-5
IC801	K-1
IC806	L-2
IC808	L-2
IC812	J-2
IC815	K-2
IC816	I-2
IC823	M-2

W2(ENCODER) P.C.BOARD

MODEL TYPE	AU-65H	AU-63H	AU-62H
NTSC	VEP88063P	VEP88063G	VEP88063G
PAL	VEP88063M	VEP88063N	VEP88063Q

P.C. Board Location

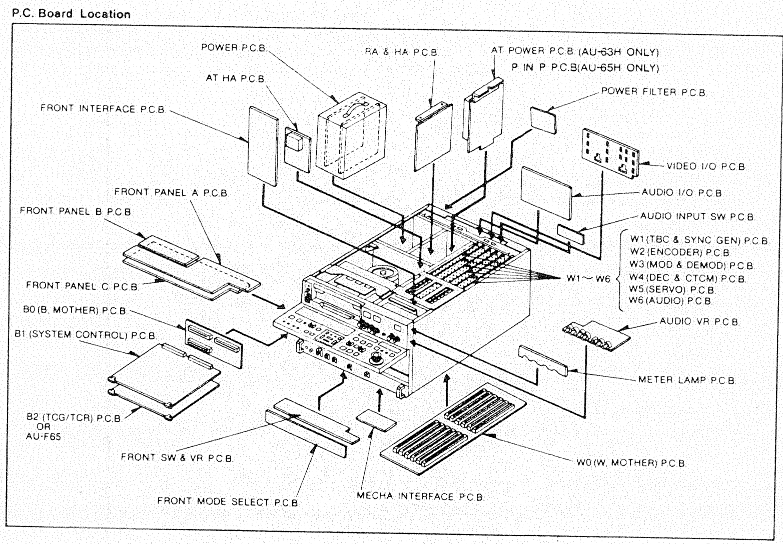
POWER P.C.B
RA & HA P.C.B
AT POWER P.C.B (AU-63H ONLY)
P IN P P.C.B(AU-65H ONLY)
AT HA P.C.B
POWER FILTER P.C.B
FRONT INTERFACE P.C.B
VIDEO I/O P.C.B
FRONT PANEL A P.C.B
AUDIO I/O P.C.B
FRONT PANEL B P.C.B
AUDIO INPUT SW P.C.B
W1 (TBC & SYNC GEN) P.C.B
W2 (ENCODER) P.C.B
W3 (MOD & DEMOD) P.C.B
W1～W6
W4 (DEC & CTCM) P.C.B
W5 (SERVO) P.C.B
W6 (AUDIO) P.C.B
FRONT PANEL C P.C.B
B0 (B. MOTHER) P.C.B
AUDIO VR P.C.B
B1 (SYSTEM CONTROL) P.C.B
METER LAMP P.C.B
B2 (TCG/TCR) P.C.B
OR
AU-F65
FRONT SW & VR P.C.B
W0 (W. MOTHER) P.C.B
FRONT MODE SELECT P.C.B
MECHA INTERFACE P.C.B

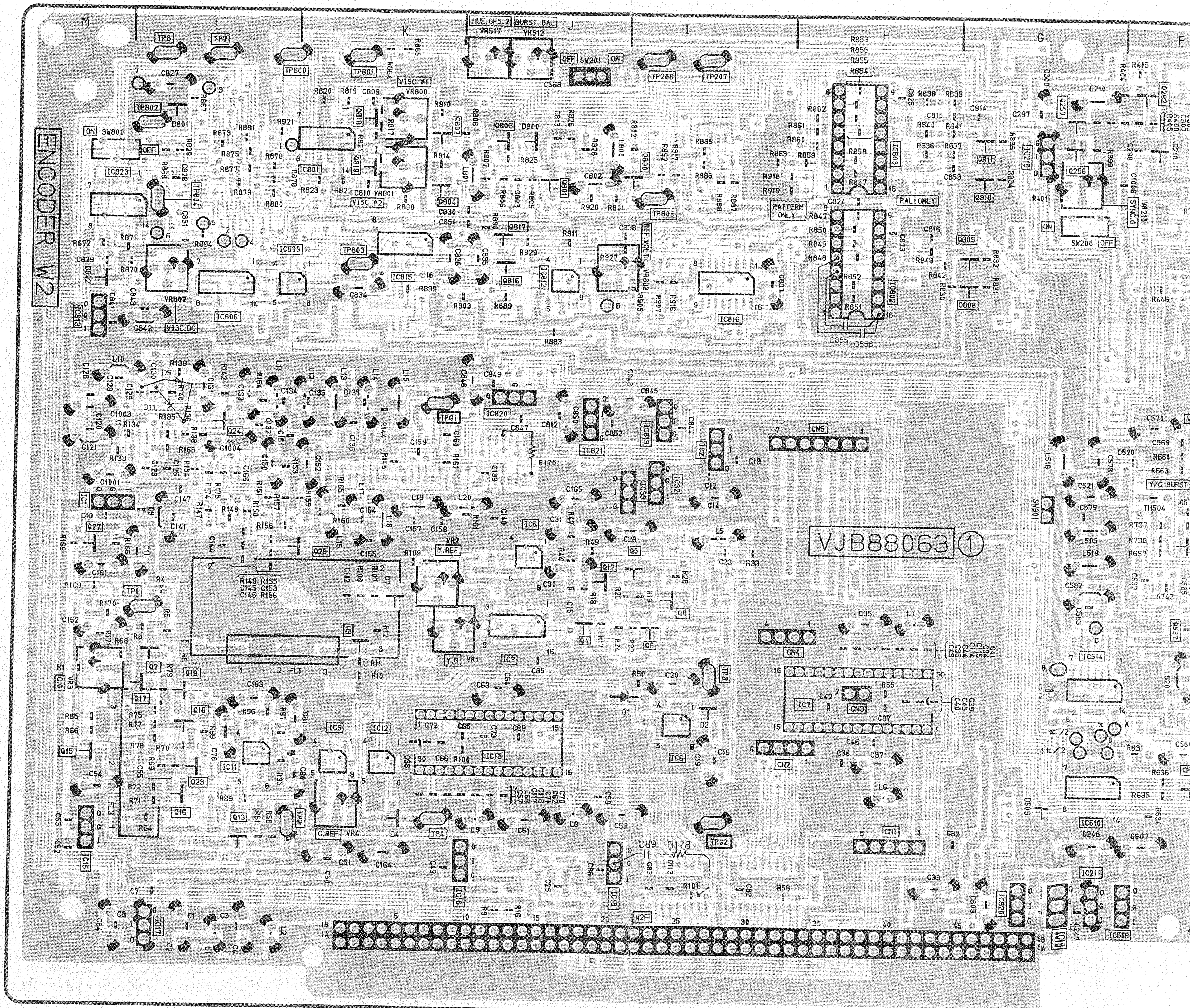
M
L
K
J
I
H
G
F
ENCODER W2
VJB88063 ①
HUE OFS.2
BURST BAL
VR517
VR512
SW201
SW800
SW200
PAL ONLY
PATTERN ONLY
VISC #1
VISC #2
VISC.DC
Y/C BURST
REF.VR
Y.REF
C.REF
Y.G
CN1
CN2
CN3
CN4
CN5
TP1
TP2
TP4
TP6
TP7
TP800
TP801
TP802
TP803
TP805
TP206
TP207
TPG1
TPG2

CHIP PART INFORMATION

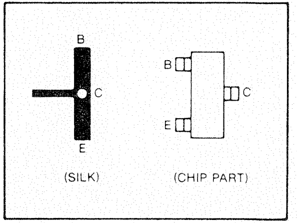
B
C
E
(SILK)
B
C
E
(CHIP PART)

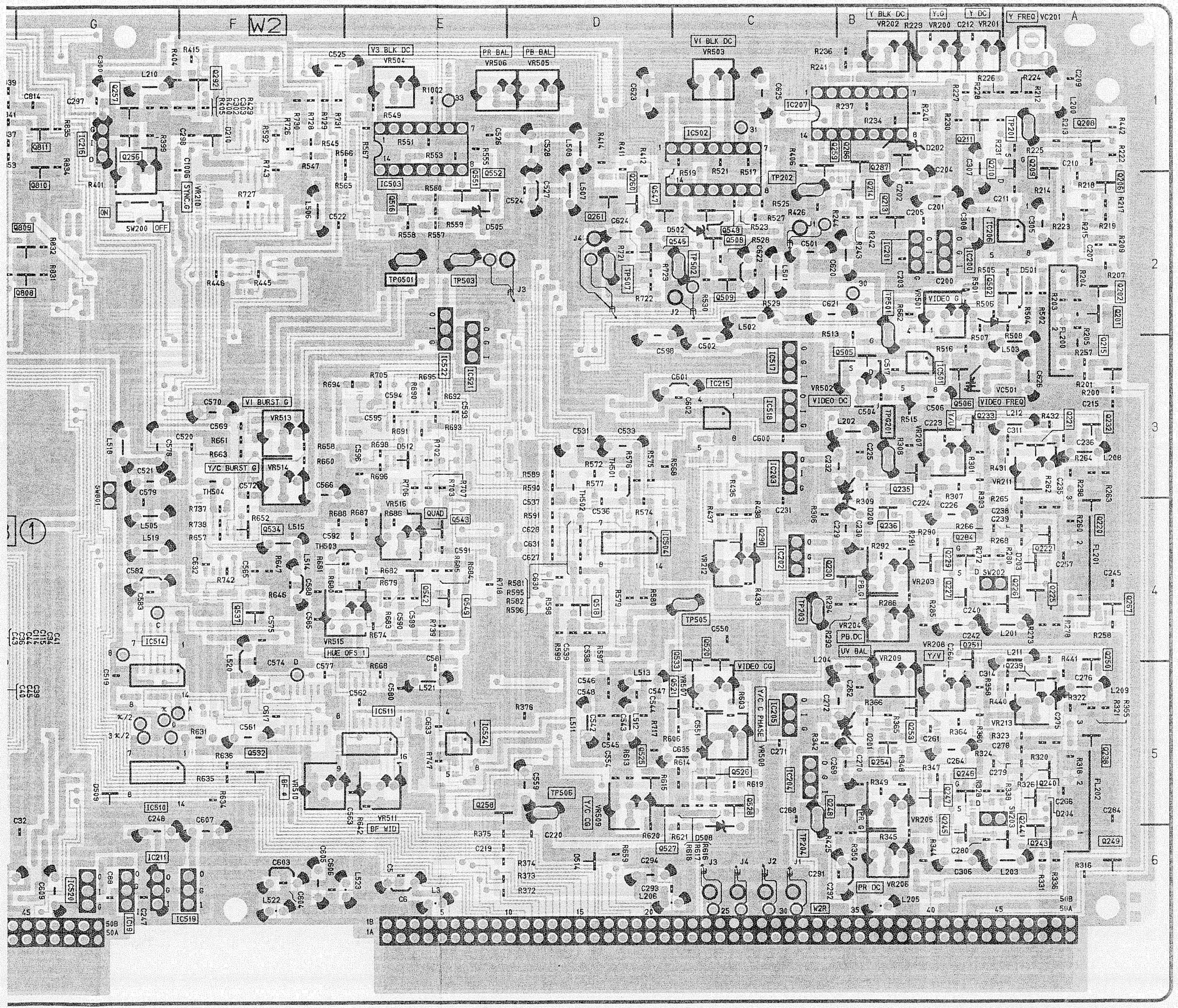
G
F
W2
E
D
C
B
A
Y BLK DC
VR202
Y.G
VR200
Y DC
VR201
Y FREQ
VC201
V3 BLK DC
VR504
PR BAL
VR506
PB BAL
VR505
V1 BLK DC
VR503
V1 BURST G
VR513
Y/C BURST G
VR514
QUAD
HUE OFS 1
VR515
VIDEO G
VR501
VIDEO FREQ
VC501
VIDEO DC
VR502
VIDEO CG
VR507
Y/C PHASE
VR509
UV BAL
VR209
PB DC
VR204
PR DC
VR206
BF WID
VR511
TP501
TP503
TP505
TP506
W2R
SW200
ON
OFF
1
2
3
4
5
6
50B
50A
1B
1A

(FOIL SIDE)

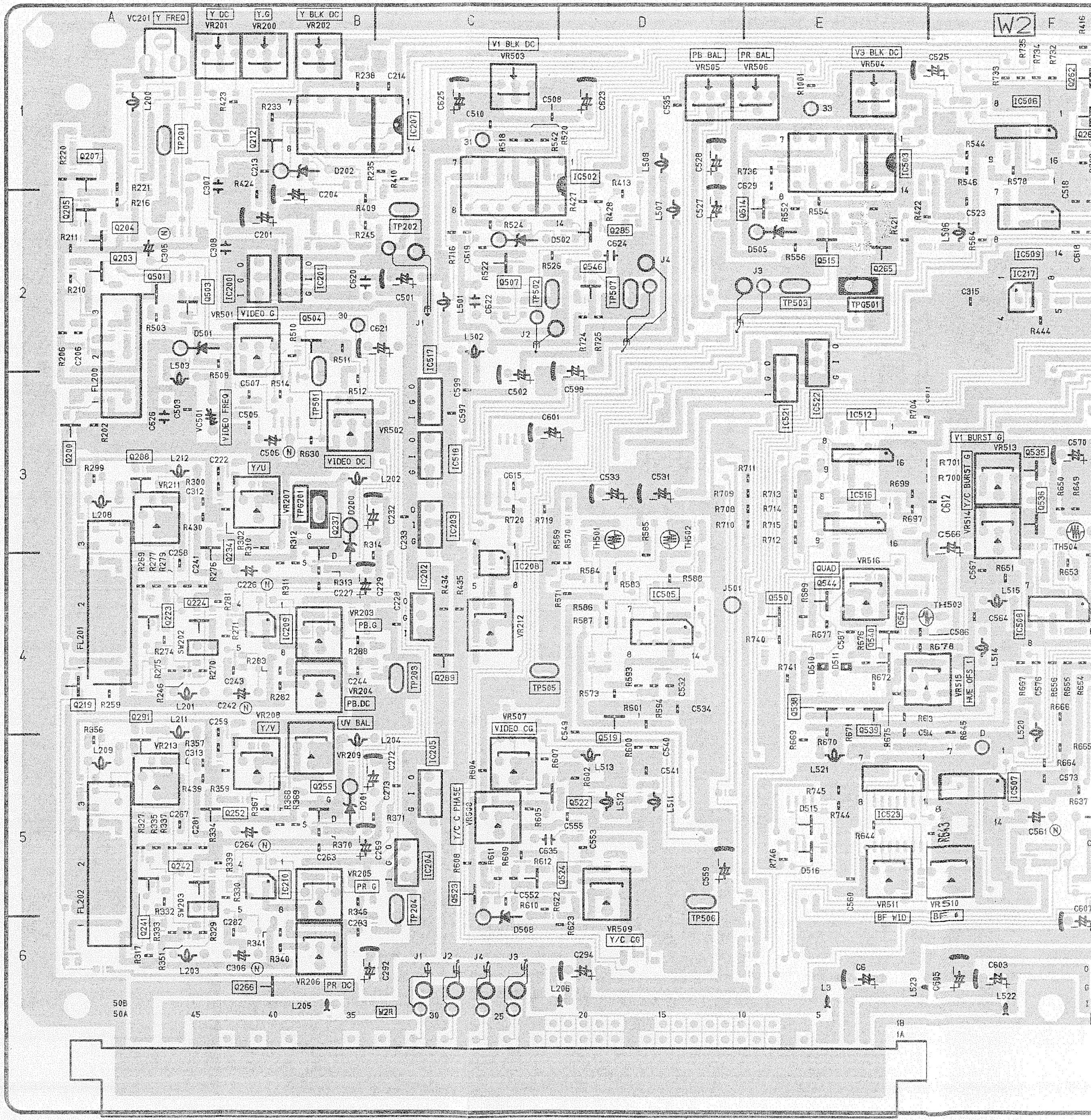
A
B
C
D
E
F
W2
VC201
Y FREQ
Y DC
VR201
Y.G
VR200
Y BLK DC
VR202
V1 BLK DC
VR503
PB BAL
VR505
PR BAL
VR506
V3 BLK DC
VR504
VIDEO G
VR501
VIDEO FREQ
VC501
VIDEO DC
VR502
VIDEO CG
VR507
Y/C PHASE
VR509
Y/C CG
UV BAL
VR209
PB DC
VR204
PR DC
VR206
V1 BURST G
VR513
QUAD
HUE OFS
BF WID
VR511
TP501
TP503
TP505
TP506
W2R
1
2
3
4
5
6
50B
50A
1B
1A

CHIP PART INFORMATION

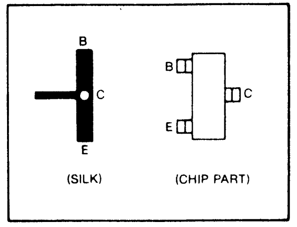
B
C
E
B
C
E
(SILK)
(CHIP PART)

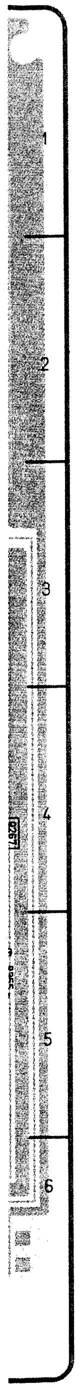

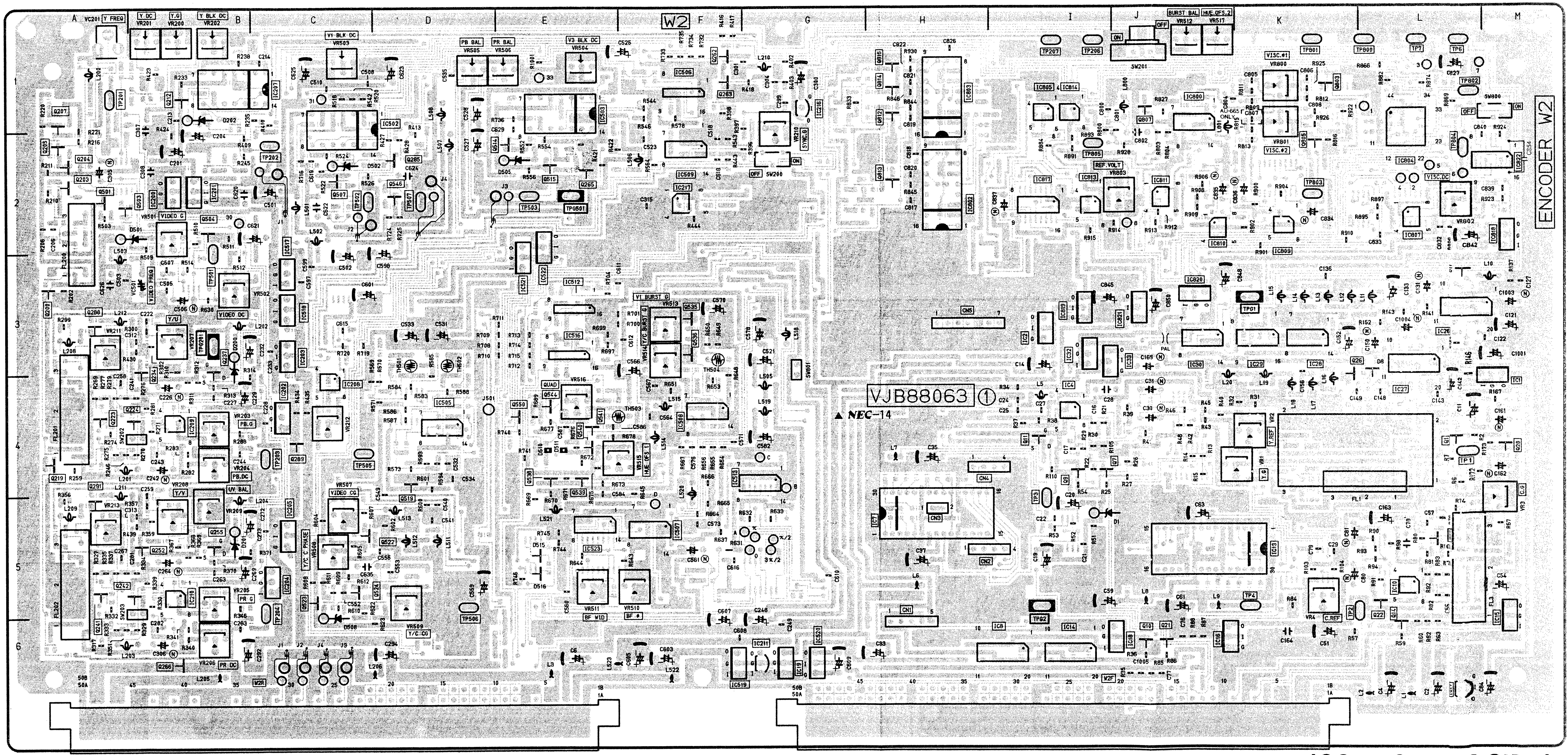
A
B
C
D
E
F
G
H
I
J
K
L
M
W2
ENCODER W2
VJB88063 ①
▲ NEC-14
1
2
3
4
5
6

E)

(COMPONENT SIDE)

REVERSE SIDE

W4 DECODER P.C.BOAR

W4(DECODER) P.C.BOARD(FOR NTSC)

TYPE \ MODEL	AU-65H	AU-63H	AU-62H
NTSC	VEP83172A	Not Used	Not Used
PAL	SCM-33	Not Used	Not Used

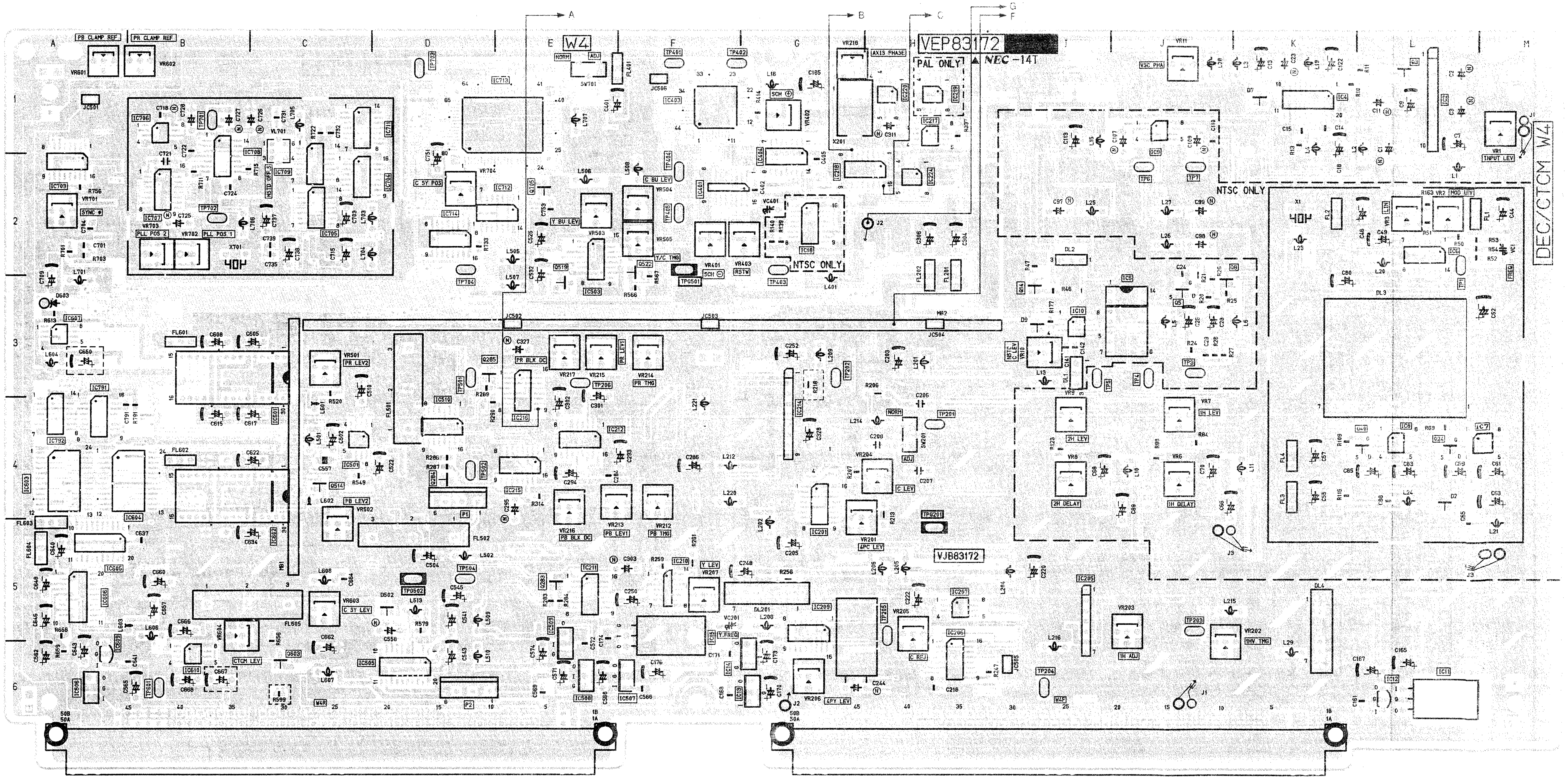
A
B
C
G
F
W4
VEP83172
NEC -14T
PAL ONLY
NTSC ONLY
DEC/CTCM W4
VJB83172
PB CLAMP REF
PR CLAMP REF
SYNC
PLL POS 2
PLL POS 1
C SY POS
Y BU LEV
C BU LEV
AXIS PHASE
T/C TMG
NORM
ADJ
INPUT LEV
MOD LEV
PR LEV2
PR BLK DC
PR LEV1
PR TMG
PB LEV2
PB BLK DC
PB LEV1
PB TMG
C SY LEV
CTCM LEV
Y LEV
Y.FREQ
4PC LEV
C LEV
C REF
6PY LEV
2H LEV
1H LEV
2H DELAY
1H DELAY
1H ADJ
VSC PHA
MHV TMG
J1
J2
J3

(COMPONENT SIDE)

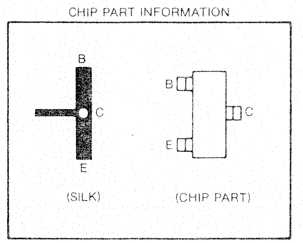
CHIP PART INFORMATION
B
C
E
B
C
E
(SILK)
(CHIP PART)

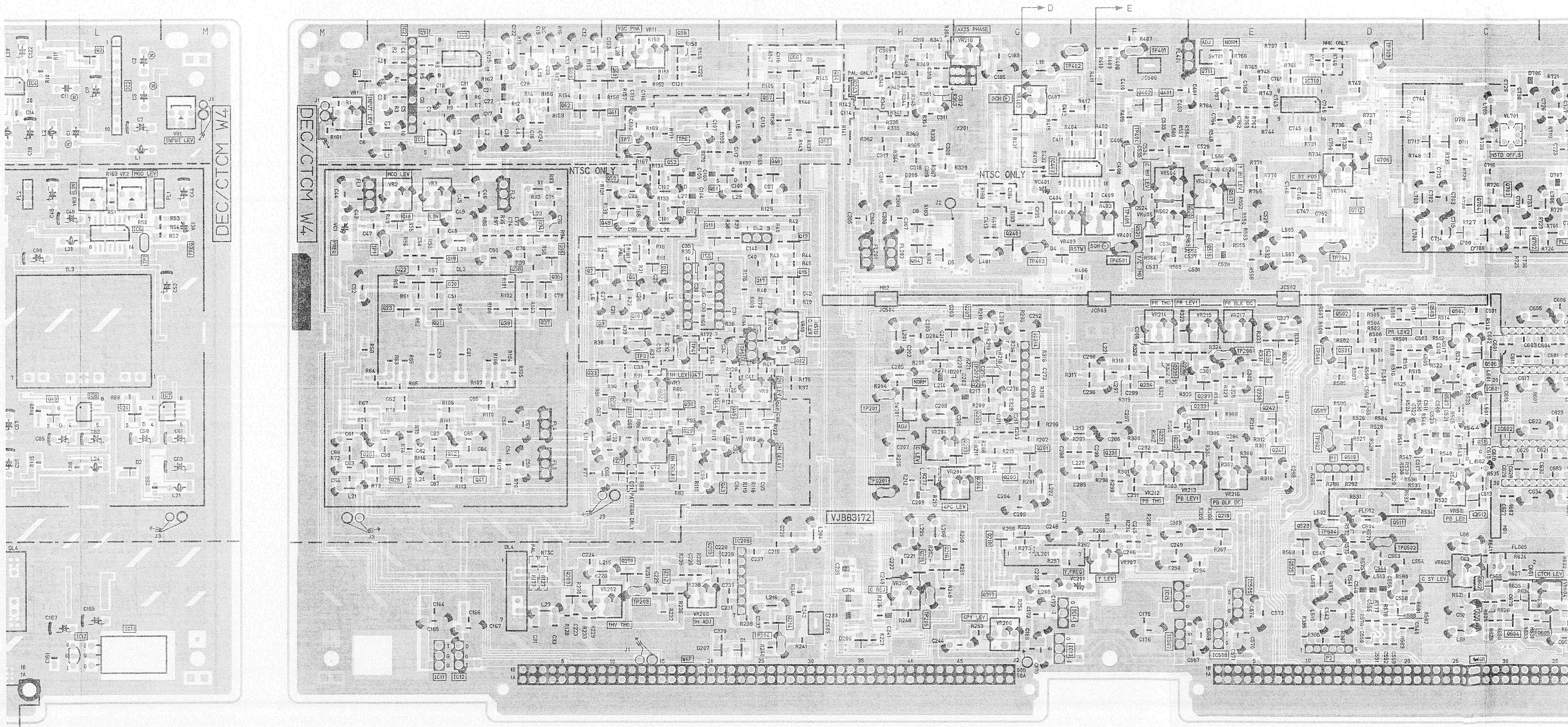
L
M
M
D
E
DEC/CTCM W4
DEC/CTCM W4
INPUT LEV
MOD LEV
NTSC ONLY
NTSC ONLY
PAL ONLY
NHK ONLY
AXIS PHASE
VSC PHA
PATTERN ONLY
VJB63172
JC504
JC503
JC502
PR TMG
PR LEV1
PR BLK DC
PB TMG
PB LEV1
PB BLK DC
C SY POS
N5TD OFF.S
C SY LEV
CTCM LEV
Y LEV
Y FREQ
4PC LEV
4PY LEV
C REJ
1H ADJ
1HV TMG
C LEV
1H LEV
1H DELAY
2H DELAY
PR LEV2
PB LEV
SCH
NORM
ADJ
J1
J2
J3
J9
1B
1A
50B
50A

(COMPONENT SIDE)

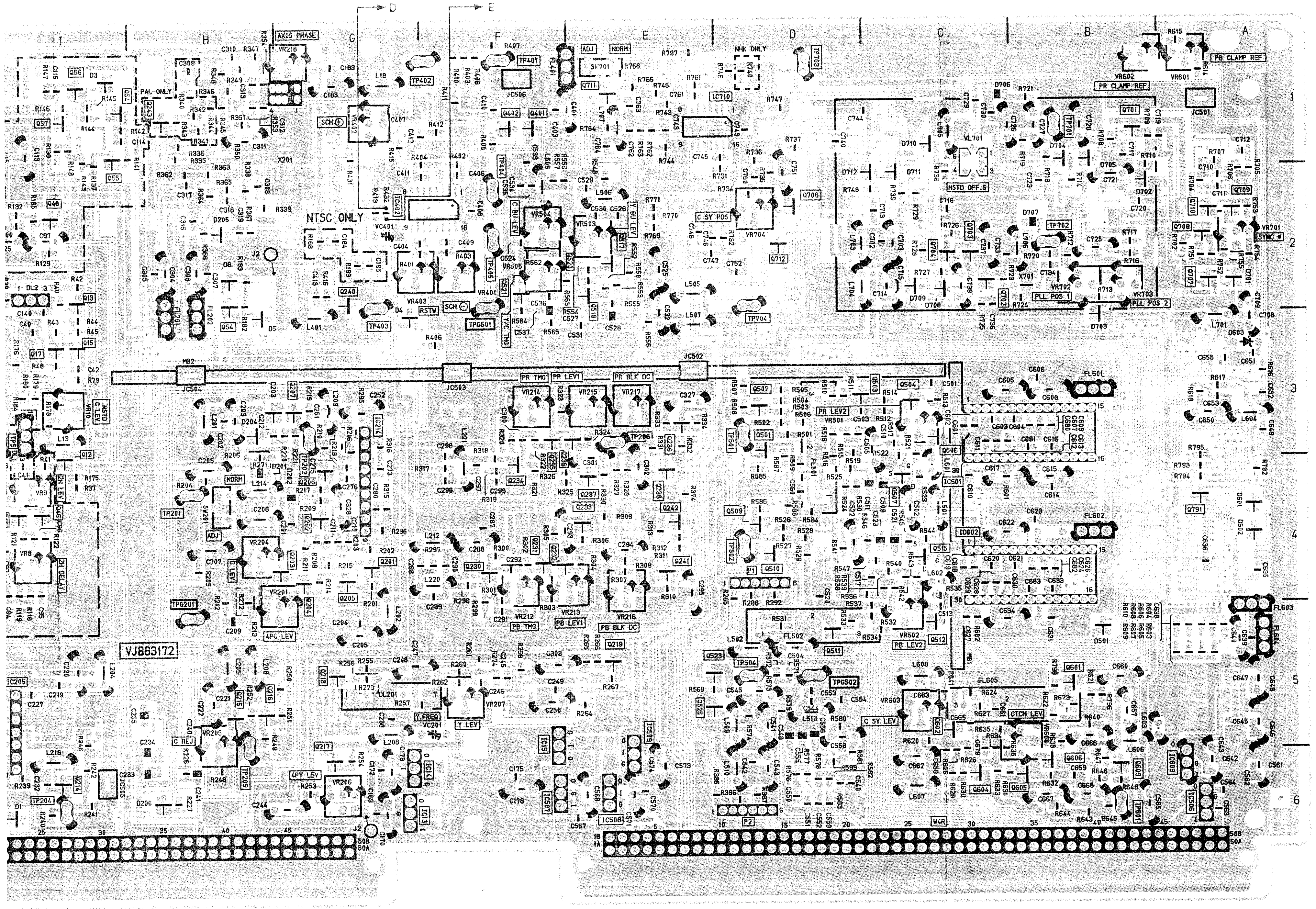
D
E
I
H
G
F
E
D
C
B
A
NTSC ONLY
VJB83172
1
2
3
4
5
6

(FOIL SIDE)

W4 (DECODER) SUB P.C.BOARD
(VEP83178A)

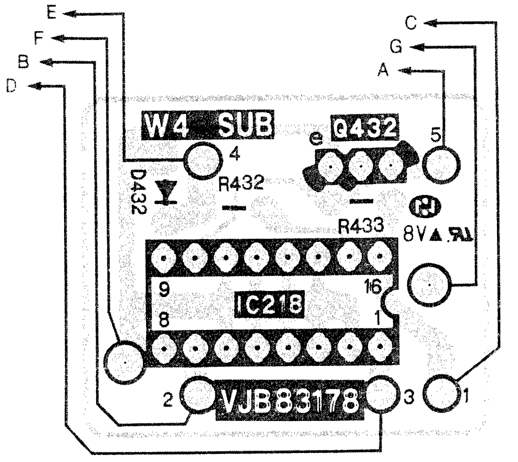
E
F
B
D
C
G
A
W4 SUB
Q432
D432
R432
R433
8V
IC218
VJB83178
1
2
3
4
5
8
9
16

(FOIL SIDE)

P.C. Board Location

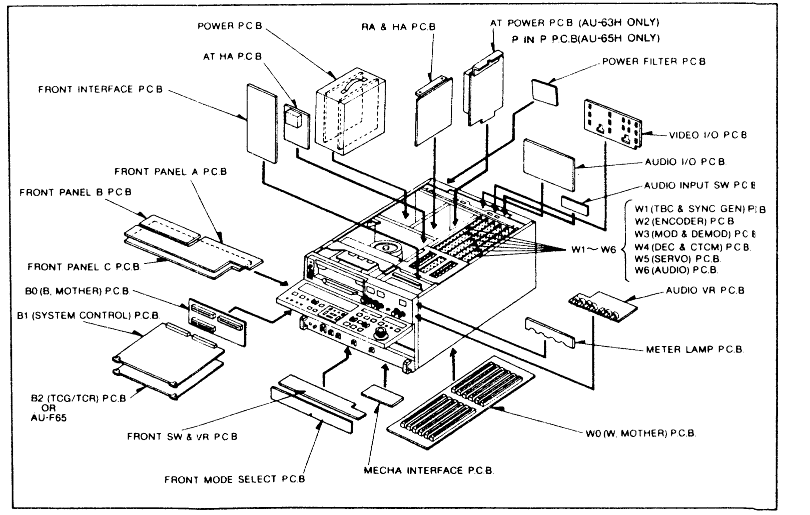
POWER P.C.B
RA & HA P.C.B
AT POWER P.C.B (AU-63H ONLY)
P IN P P.C.B(AU-65H ONLY)
AT HA P.C.B
POWER FILTER P.C.B
FRONT INTERFACE P.C.B
VIDEO I/O P.C.B
AUDIO I/O P.C.B
FRONT PANEL A P.C.B
FRONT PANEL B P.C.B
AUDIO INPUT SW P.C.B
W1(TBC & SYNC GEN) P.C.B
W2(ENCODER) P.C.B
W3(MOD & DEMOD) P.C.B
W4(DEC & CTCM) P.C.B
W5(SERVO) P.C.B
W6(AUDIO) P.C.B
W1～W6
FRONT PANEL C P.C.B
B0(B. MOTHER) P.C.B
AUDIO VR P.C.B
B1(SYSTEM CONTROL) P.C.B
METER LAMP P.C.B
B2 (TCG/TCR) P.C.B
OR
AU-F65
FRONT SW & VR P.C.B
W0(W. MOTHER) P.C.B
FRONT MODE SELECT P.C.B
MECHA INTERFACE P.C.B

DEC/CTCM P.C.BOARD

COMPONENT SIDE								FOIL SIDE					
TRANSISTOR		IC224	H-2	VR203	J-5	TP402	F-1	TRANSISTOR		Q54	I-1	Q506	C-3
Q3	L-1	IC401	F-2	VR204	H-4	TP403	G-2	Q1	M-1	Q55	I-1	Q507	C-4
Q5	J-3	IC403	F-1	VR205	H-5	TP404	F-2	Q2	L-1	Q56	I-1	Q509	D-4
Q8	J-3	IC404	G-2	VR206	G-6	TP405	F-2	Q4	J-3	Q57	I-1	Q510	D-4
Q14	I-3	IC501	C-4	VR207	F-5	TP501	D-3	Q6	J-3	Q58	J-1	Q511	D-5
Q24	L-4	IC503	E-2	VR212	F-4	TP502	D-4	Q7	J-3	Q59	K-1	Q512	C-5
Q40	L-4	IC505	D-6	VR213	E-4	TP504	D-5	Q9	J-3	Q60	J-1	Q515	C-4
Q283	E-5	IC506	A-6	VR214	F-3	TP601	B-6	Q10	J-3	Q61	K-1	Q517	E-2
Q284	D-4	IC507	F-6	VR215	E-3	TP701	B-1	Q11	J-2	Q62	K-1	Q518	E-2
Q285	D-3	IC508	E-6	VR216	E-4	TP702	B-2	Q12	I-3	Q64	H-2	Q520	F-2
Q514	C-4	IC509	E-5	VR217	E-3	TP703	D-1	Q13	I-2	Q201	G-4	Q521	F-2
Q519	E-3	IC510	D-4	VR218	G-1	TP704	D-2	Q15	I-3	Q202	G-4	Q523	E-5
Q522	F-2	IC601	B-3	VR401	F-2			Q17	I-3	Q203	G-4	Q525	E-5
Q603	C-6	IC602	B-4	VR402	G-1	TPG201	H-5	Q18	L-2	Q204	G-4	Q601	B-5
Q705	E-2	IC603	A-4	VR403	G-2	TPG501	F-2	Q19	L-3	Q205	G-4	Q602	C-5
		IC604	B-4	VR501	C-3	TPG502	D-5	Q20	L-3	Q206	G-4	Q604	C-6
INTEGRATED CIRCUIT		IC605	A-5	VR502	C-4			Q21	L-3	Q207	G-3	Q605	B-6
		IC606	A-5	VR503	E-2	CONNECTOR		Q22	L-3	Q209	K-5	Q606	B-6
IC2	L-2	IC607	A-3	VR504	F-2	P1	D-4	Q23	L-3	Q210	J-5	Q609	B-6
IC4	K-1	IC609	A-6	VR505	F-2	P2	D-6	Q25	L-4	Q212	J-5	Q701	B-1
IC5	J-3	IC610	B-6	VR601	A-1			Q26	L-4	Q213	J-5	Q702	C-2
IC6	L-2	IC703	A-2	VR602	B-1			Q27	J-4	Q214	I-6	Q703	C-2
IC7	M-4	IC704	C-2	VR603	C-5			Q28	J-4	Q215	H-5	Q704	C-2
IC8	L-4	IC705	C-2	VR604	B-5			Q29	J-4	Q216	H-5	Q706	D-2
IC9	J-1	IC706	B-1	VR701	A-2			Q30	J-4	Q217	G-6	Q707	A-2
IC10	I-3	IC707	B-2	VR702	B-2			Q31	J-4	Q218	G-5	Q708	A-2
IC11	L-6	IC708	B-2	VR703	B-2			Q32	J-4	Q219	E-5	Q709	A-2
IC12	L-6	IC709	C-2	VR704	D-2			Q33	J-4	Q230	F-4	Q710	A-2
IC13	G-6	IC711	C-1					Q34	K-2	Q231	F-4	Q711	E-1
IC14	G-6	IC712	E-2	VC1	M-2			Q35	K-3	Q232	F-4	Q712	D-2
IC15	F-5	IC713	E-1	VR201	F-5			Q36	K-3	Q233	E-4	Q791	A-4
IC18	G-2	IC714	D-2	VR401	G-2			Q37	K-3	Q234	F-4		
IC201	G-4	IC791	A-4					Q38	K-3	Q235	F-3	INTEGRATED CIRCUIT	
IC205	I-5	IC792	A-4	TEST POINT				Q39	K-3	Q236	E-3		
IC206	H-6			TP1	L-1			Q41	L-4	Q237	E-4	IC1	L-1
IC207	H-5	ADJUSTMENT		TP3	J-3			Q42	L-4	Q238	E-4	IC3	L-1
IC209	G-5	VR1	M-1	TP4	J-3			Q43	I-4	Q239	E-3	IC402	F-2
IC210	F-5	VR2	L-2	TP5	I-3			Q44	I-4	Q240	G-2	IC710	D-1
IC211	E-5	VR3	L-2	TP6	J-2			Q45	I-4	Q241	E-4		
IC212	E-4	VR6	J-4	TP7	J-2			Q46	I-4	Q242	E-4		
IC214	G-4	VR7	J-4	TP201	H-4			Q47	J-4	Q243	H-1		
IC215	E-4	VR8	I-4	TP202	G-3			Q48	I-2	Q401	F-1		
IC216	E-3	VR9	I-4	TP203	J-5			Q49	J-2	Q402	F-1		
IC217	H-1	VR10	I-3	TP204	I-6			Q50	J-2	Q501	D-3		
IC218	G-2	VR11	J-1	TP205	H-5			Q51	I-2	Q502	D-3		
IC219	H-1	VR201	G-5	TP206	E-3			Q52	J-2	Q503	D-3		
IC220	H-1	VR202	J-5	TP401	F-1			Q53	J-2	Q504	C-3		

DEC/CTCM P.C. BOARD

COMPONENT SIDE

TRANSISTOR	
Q11	H-6
Q283	D-5
Q285	D-3
Q323	F-5
Q514	C-4
Q603	C-6

INTEGRATED CIRCUIT	
IC1	J-6
IC2	J-5
IC3	J-6
IC4	K-5
IC5	L-5
IC6	K-6
IC8	H-6
IC9	H-6
IC10	G-6
IC11	L-1
IC12	L-2
IC13	L-2
IC14	M-1
IC15	L-2
IC17	L-1
IC18	L-1
IC21	K-1
IC22	L-1
IC24	K-1
IC25	K-2
IC26	I-5
IC27	H-5
IC51	L-6
IC52	E-6
IC53	F-6
IC54	E-6
IC201	M-5
IC202	L-4
IC203	K-3
IC204	K-3
IC205	L-3
IC206	K-4
IC207	K-3
IC208	K-3
IC209	K-5
IC210	J-4
IC211	K-4
IC212	H-4
IC213	I-4
IC214	I-3
IC215	G-5
IC216	H-3
IC217	H-3
IC219	H-2
IC220	G-4
IC221	J-2
IC222	J-2
IC223	J-2
IC224	J-2
IC225	G-3
IC226	I-2
IC227	I-1
IC228	J-1
IC229	J-1
IC230	H-1
IC233	J-1
IC234	E-4
IC235	E-4
IC236	E-4
IC237	E-3
IC238	I-2
IC401	G-2
IC402	G-2
IC403	G-1
IC405	H-5
IC406	H-5
IC407	H-4
IC409	H-4
IC501	C-4
IC503	F-2
IC504	F-1
IC505	D-6
IC506	A-6
IC507	E-6
IC510	D-4
IC601	B-3
IC602	B-4
IC603	A-4
IC604	B-4
IC605	A-5
IC606	A-5
IC607	A-3
IC609	A-6
IC610	B-6
IC703	A-2
IC704	C-2
IC705	C-2
IC706	B-1
IC707	B-2
IC708	B-2
IC709	C-2
IC711	C-1
IC713	E-1
IC781	D-2
IC783	D-2
IC791	A-4
IC792	A-4

TEST POINT	
TP1	K-5
TP2	L-5
TP111	K-2
TP201	L-4
TP202	L-4
TP203	I-4
TP401	F-1
TP402	H-1
TP403	F-2
TP404	F-2
TP405	G-2
TP451	I-1
TP452	J-2
TP501	D-3
TP502	D-4
TP504	D-5
TP601	B-6
TP701	B-1
TP702	B-2
TP703	C-1
TP704	D-2
TPG201	K-4
TPG501	F-2
TPG502	D-5

ADJUSTMENT	
VR1	I-6
VR2	J-6
VR111	L-1
VR112	L-2
VR113	L-2
VR322	F-4
VR323	E-4
VR351	F-4
VR352	E-4
VR366	F-3
VR367	E-3
VR401	G-2
VR403	F-2
VR451	J-1
VR501	C-3
VR502	C-5
VR503	F-2
VR504	F-1
VR505	F-1
VR511	F-1
VR512	F-2
VR601	A-1
VR602	B-1
VR603	C-5
VR604	B-5
VR701	A-2
VR702	B-2
VR703	B-2
VR704	D-2
VR781	D-2
VC321	F-4

CONNECTOR	
P1	D-4
P2	D-6
P3	K-1
P4	L-3
P5	K-2

FOIL SIDE

TRANSISTOR	
Q1	I-5
Q2	I-5
Q3	J-5
Q4	J-5
Q5	J-5
Q6	J-5
Q7	K-5
Q8	K-5
Q9	J-5
Q10	J-5
Q61	H-6
Q101	M-2
Q111	K-2
Q284	D-4
Q321	F-5
Q322	F-5
Q324	F-4
Q325	E-5
Q326	E-5
Q327	F-5
Q328	E-5
Q329	F-5
Q330	F-5
Q351	F-4
Q352	F-4
Q353	E-4
Q354	E-4
Q355	E-4
Q366	F-3
Q367	F-3
Q368	E-3
Q369	E-3
Q370	E-3
Q401	G-1
Q402	G-1
Q450	I-1
Q451	I-1
Q452	J-1
Q501	D-3
Q502	D-3
Q503	C-3
Q504	C-3
Q506	C-3
Q507	C-4
Q509	D-4
Q510	D-4
Q511	D-5
Q512	C-5
Q515	C-4
Q517	F-2
Q518	F-2
Q519	F-2
Q520	F-1
Q521	F-1
Q522	F-1
Q523	D-5
Q525	D-5
Q526	E-1
Q527	E-2
Q528	F-2
Q601	B-5
Q602	C-5
Q604	C-6
Q605	B-6
Q606	B-6
Q609	B-6
Q701	B-1
Q702	C-2
Q703	C-2
Q704	C-2
Q705	D-1
Q706	D-2
Q707	A-2
Q708	A-2
Q709	A-2
Q710	A-2
Q711	E-1
Q712	D-1
Q791	A-4

INTEGRATED CIRCUIT	
IC7	M-3
IC19	K-1
IC20	K-1
IC23	L-1
IC710	E-1
IC712	D-2
IC714	D-1

W4(DECODER) P.C.BOARD(FOR PAL)

TYPE \ MODEL	AU-65H	AU-63H	AU-62H
NTSC	SCM-30	Not Used	Not Used
PAL	VEP83173A	Not Used	Not Used

P.C. Board Location

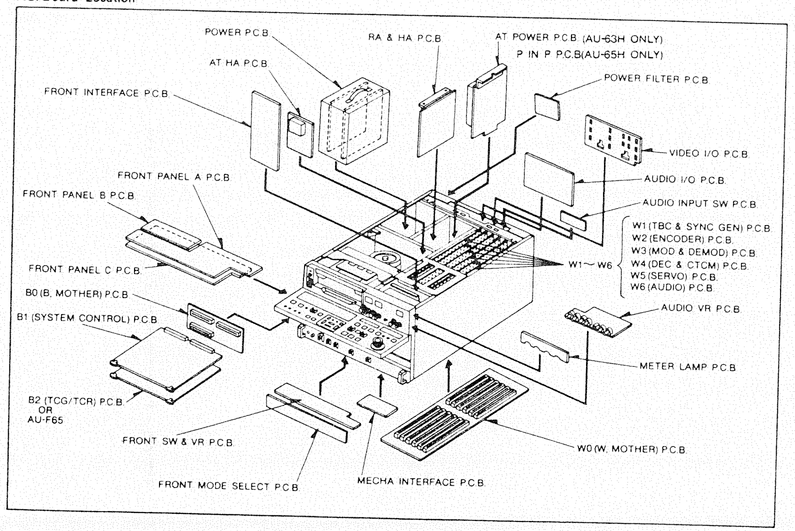
POWER P.C.B
RA & HA P.C.B
AT POWER P.C.B (AU-63H ONLY)
P IN P P.C.B(AU-65H ONLY)
AT HA P.C.B
POWER FILTER P.C.B
FRONT INTERFACE P.C.B
VIDEO I/O P.C.B
AUDIO I/O P.C.B
FRONT PANEL A P.C.B
FRONT PANEL B P.C.B
AUDIO INPUT SW P.C.B
W1 (TBC & SYNC GEN) P.C.B
W2 (ENCODER) P.C.B
W3 (MOD & DEMOD) P.C.B
W4 (DEC & CTCM) P.C.B
W5 (SERVO) P.C.B
W6 (AUDIO) P.C.B
W1~W6
FRONT PANEL C P.C.B
B0 (B. MOTHER) P.C.B
B1 (SYSTEM CONTROL) P.C.B
AUDIO VR P.C.B
METER LAMP P.C.B
B2 (TCG/TCR) P.C.B
OR
AU-F65
FRONT SW & VR P.C.B
W0 (W. MOTHER) P.C.B
FRONT MODE SELECT P.C.B
MECHA INTERFACE P.C.B

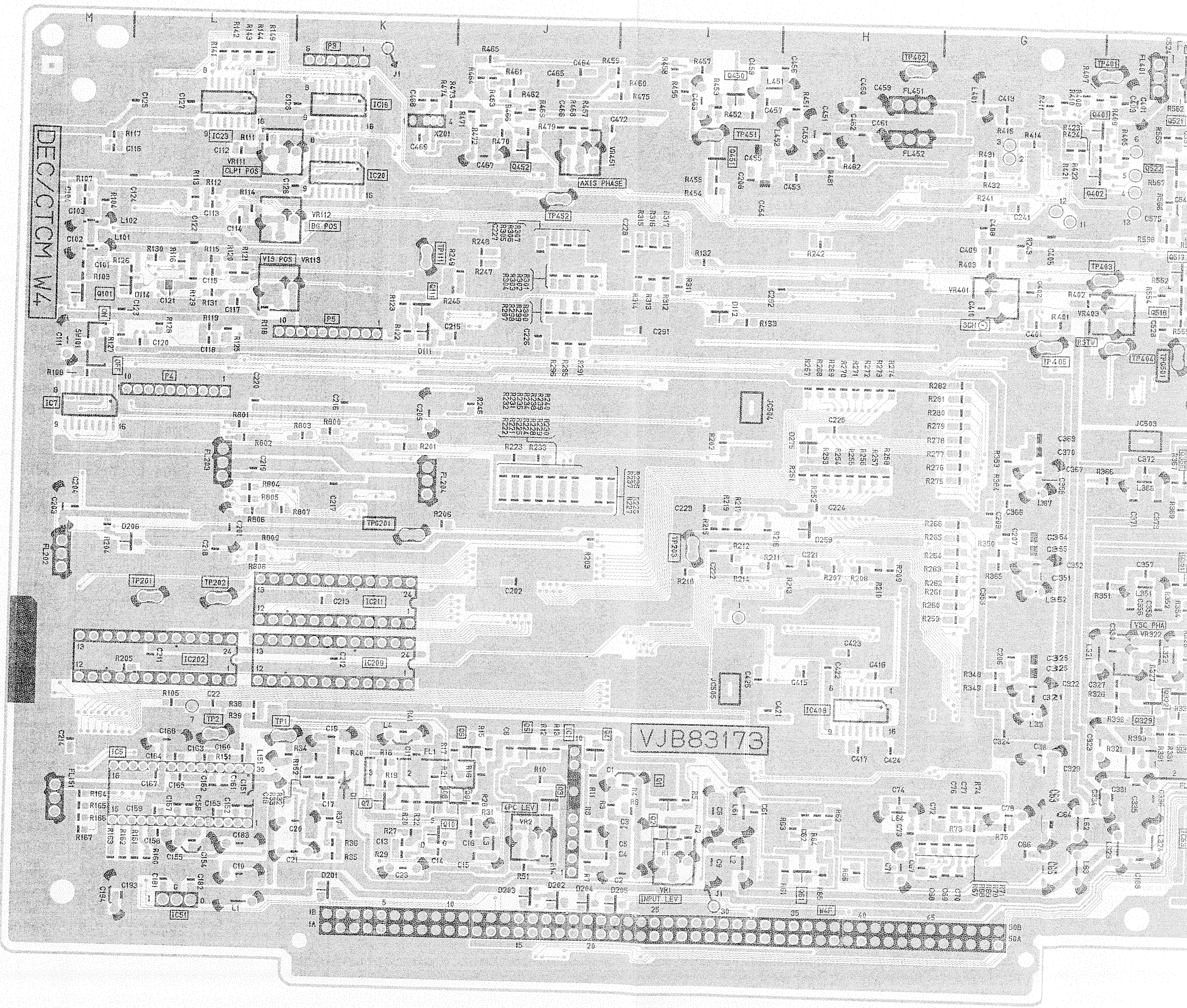
DEC/CTCM W4
VJB83173
M
L
K
J
I
H
G
CLP1 POS
BG POS
VIS POS
AXIS PHASE
4PC LEV
INPUT LEV
TP201
TP202
TP6201
IC202
IC203
IC211
IC209
IC7
IC5
IC51
IC25
IC20
IC16
IC408

CHIP PART INFORMATION

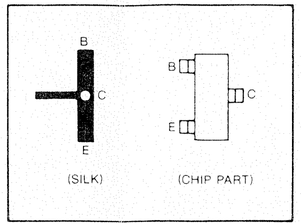
B
C
E
B
C
E
(SILK)
(CHIP PART)

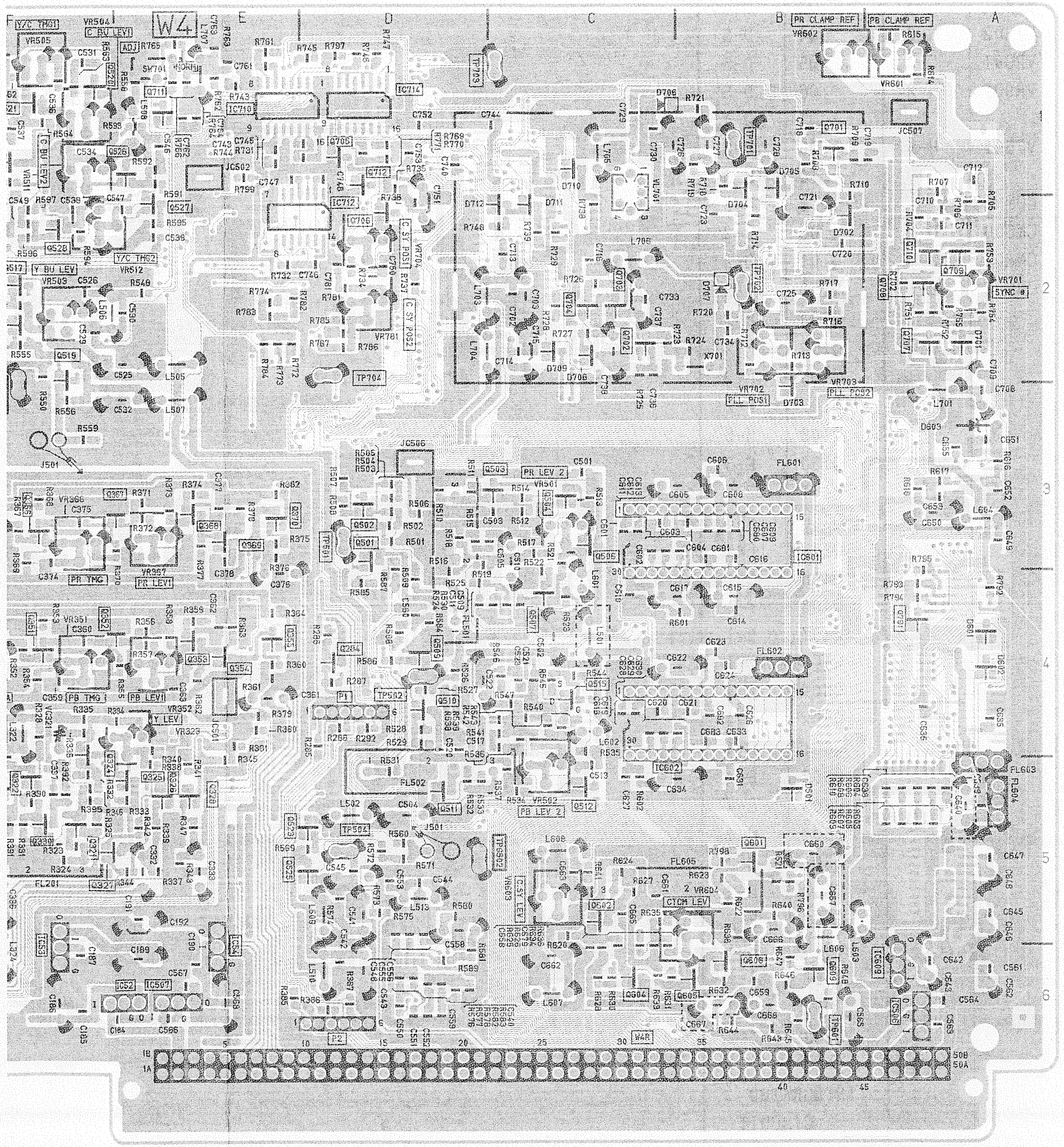
W4
F
E
D
C
B
A
PR CLAMP REF
PB CLAMP REF
Y/C TMG1
C BU LEV1
Y/C TMG2
Y BU LEV
PR TMG
PR LEV1
PB TMG
PB LEV1
Y LEV
PR LEV 2
PB LEV 2
C SY POS1
C SY POS2
PLL POS1
PLL POS2
CTCM LEV
C SY LEV
SYNC
W4R
1B
1A
50B
50A

(FOIL SIDE)

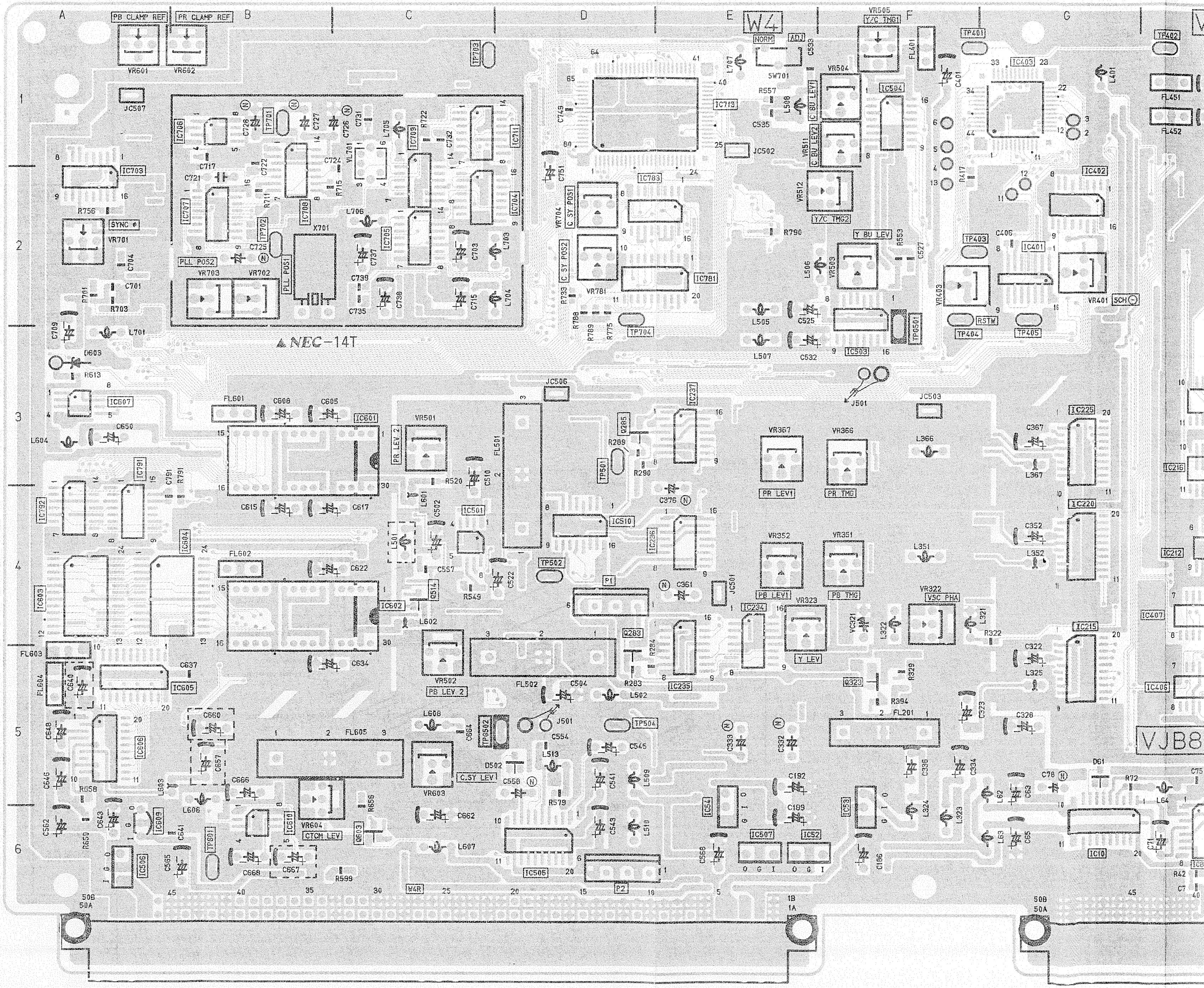
A
B
C
D
E
F
G
W4
PB CLAMP REF
PR CLAMP REF
Y/C TMG1
NORM
ADJ
▲NEC-14T
SYNC
PLL POS2
PLL POS1
C SY POS1
C SY POS2
Y BU LEV
Y/C TMG2
PR LEV 2
PR LEV1
PR TMG
PB LEV1
PB TMG
Y LEV
VSC PHA
PB LEV 2
C SY LEV
CTCM LEV
RSTW
SCH
W4R
VJB8
1B
1A
50B
50A

CHIP PART INFORMATION

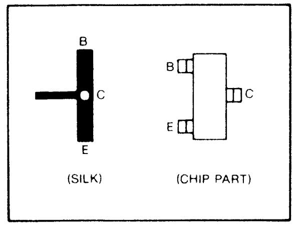
B
C
E
B
C
E
(SILK)
(CHIP PART)

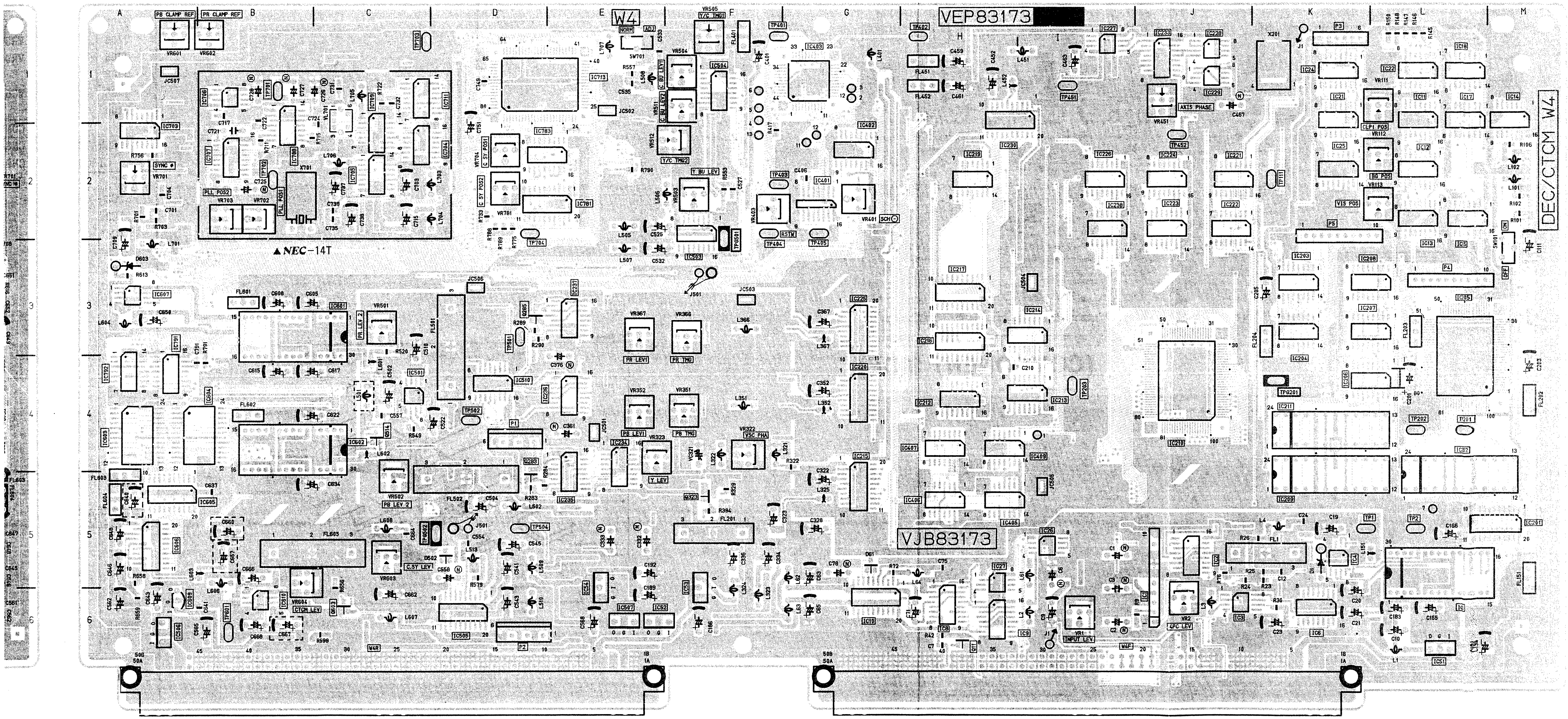
VEP83173
VJB83173
W4
DEC/CTCM W4
NEC-14T
PB CLAMP REF
PR CLAMP REF
SYNC ∅
PLL POS1
PLL POS2
C SY POS1
C SY POS2
Y/C TMG1
Y/C TMG2
C BU LEV1
C BU LEV2
Y BU LEV
AXIS PHASE
CLP1 POS
BG POS
VIS POS
PR LEV1
PR TMG
PB LEV1
PB TMG
PB LEV 2
Y LEV
VSC PHA
C.SY LEV
CTCM LEV
INPUT LEV
LPC LEV
NORM
ADJ
SCH
RSTW
ON
OFF

E)

(COMPONENT SIDE)

REVERSE SIDE

SENC P IN P P.C.BOA

W6(AUDIO) P.C.BOARD

TYPE \ MODEL	AU-65H	AU-63H	AU-62H
NTSC	VEP84095J	VEP84095C	VEP84095C
PAL	VEP84095K	VEP84095E	VEP84095E

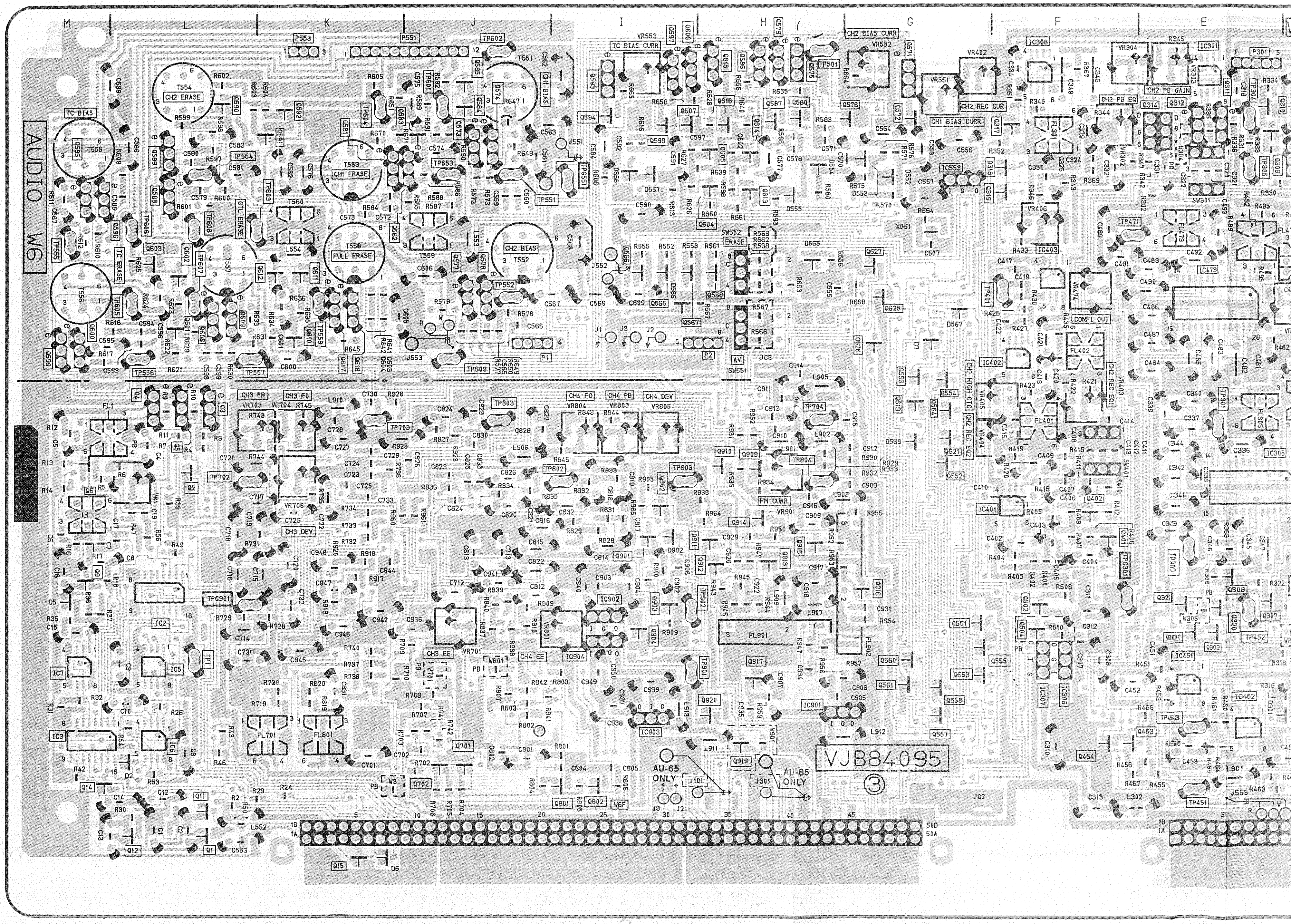
AUDIO W6
M
L
K
J
I
H
G
F
E
TC BIAS
CH2 ERASE
CH1 ERASE
FULL ERASE
CTL ERASE
TC ERASE
CH1 BIAS
CH2 BIAS
TC BIAS CURR
CH2 BIAS CURR
CH1 BIAS CURR
CH2 REC CUR
CH2 PB GAIN
CH2 PB EQ
COMP OUT
CH3 PB
CH3 FO
CH4 FO
CH4 PB
CH4 DEV
CH3 DEV
CH3 EE
CH4 EE
FM CURR
AU-65 ONLY
VJB84095
③

P.C. Board Location

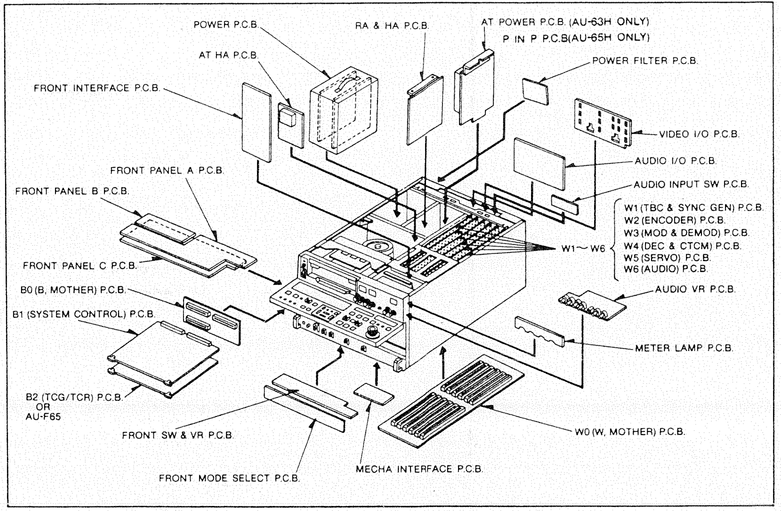
POWER P.C.B.
RA & HA P.C.B.
AT POWER P.C.B. (AU-63H ONLY)
P IN P P.C.B.(AU-65H ONLY)
AT HA P.C.B.
POWER FILTER P.C.B.
FRONT INTERFACE P.C.B.
VIDEO I/O P.C.B.
AUDIO I/O P.C.B.
FRONT PANEL A P.C.B.
AUDIO INPUT SW P.C.B.
FRONT PANEL B P.C.B.
W1 (TBC & SYNC GEN) P.C.B.
W2 (ENCODER) P.C.B.
W3 (MOD & DEMOD) P.C.B.
W1~W6
W4 (DEC & CTCM) P.C.B.
W5 (SERVO) P.C.B.
W6 (AUDIO) P.C.B.
FRONT PANEL C P.C.B.
AUDIO VR P.C.B.
B0 (B, MOTHER) P.C.B.
B1 (SYSTEM CONTROL) P.C.B.
METER LAMP P.C.B.
B2 (TCG/TCR) P.C.B. OR AU-F65
FRONT SW & VR P.C.B.
W0 (W, MOTHER) P.C.B.
FRONT MODE SELECT P.C.B.
MECHA INTERFACE P.C.B.

CHIP PART INFORMATION

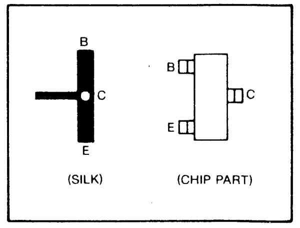
B
C
E
B
C
E
(SILK)
(CHIP PART)

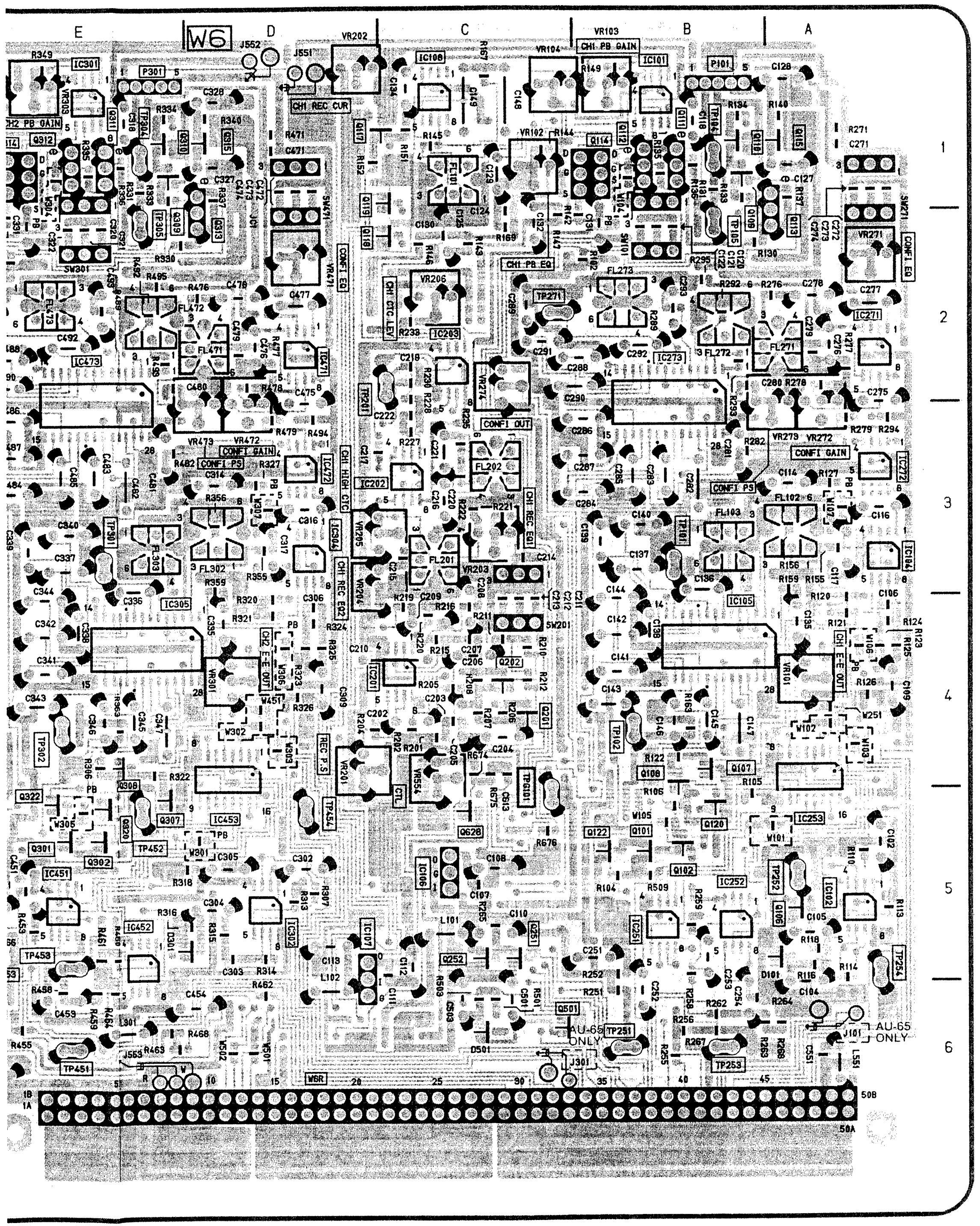
E
W6
D
C
B
A
1
2
3
4
5
6
AU-65 ONLY
50B
50A

(FOIL SIDE)

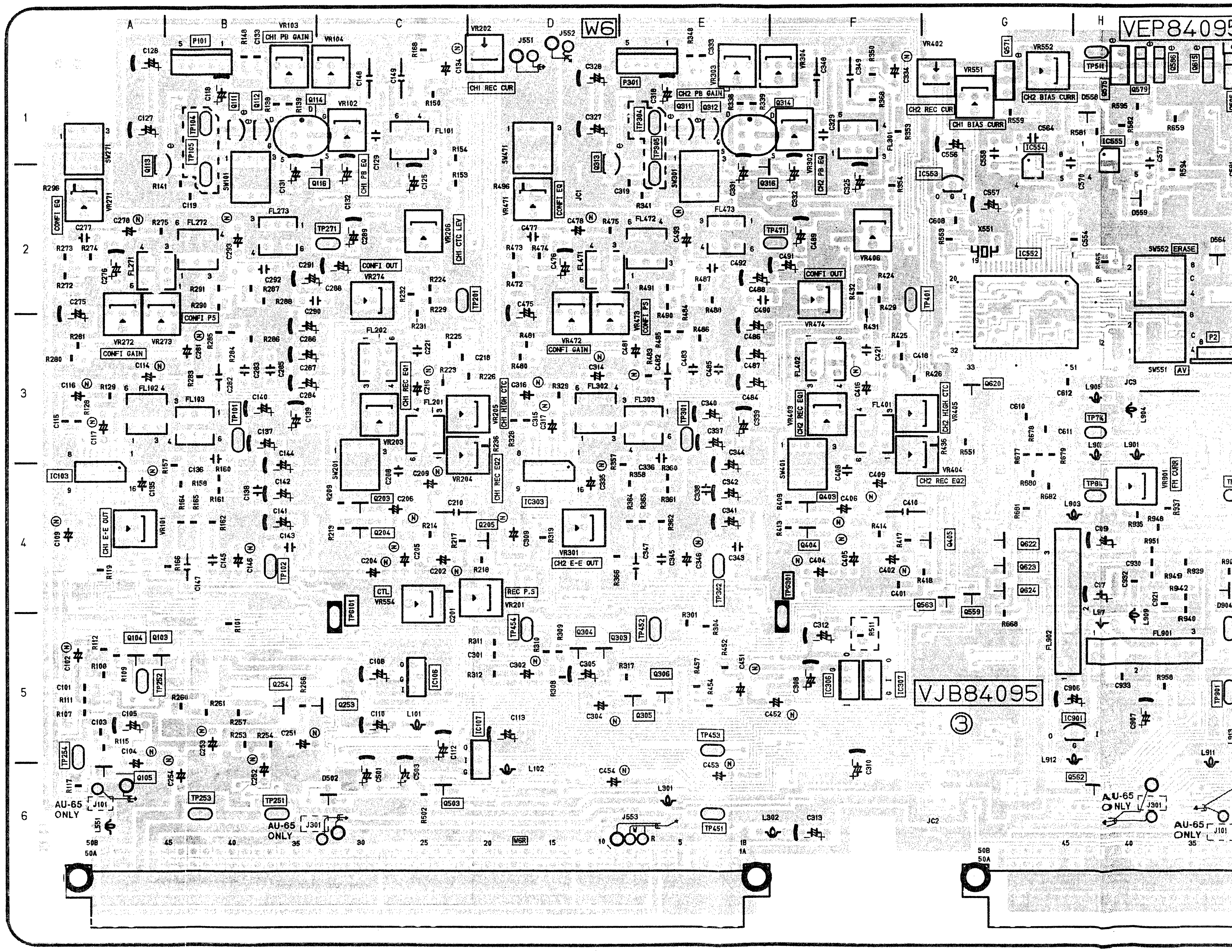
A
B
C
D
W6
E
F
G
H
VEP8409
1
2
3
4
5
6
VJB84095
③
AU-65 ONLY
50B
50A

CHIP PART INFORMATION

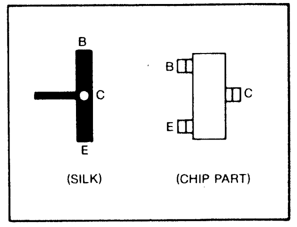
B
C
E
B
C
E
(SILK)
(CHIP PART)

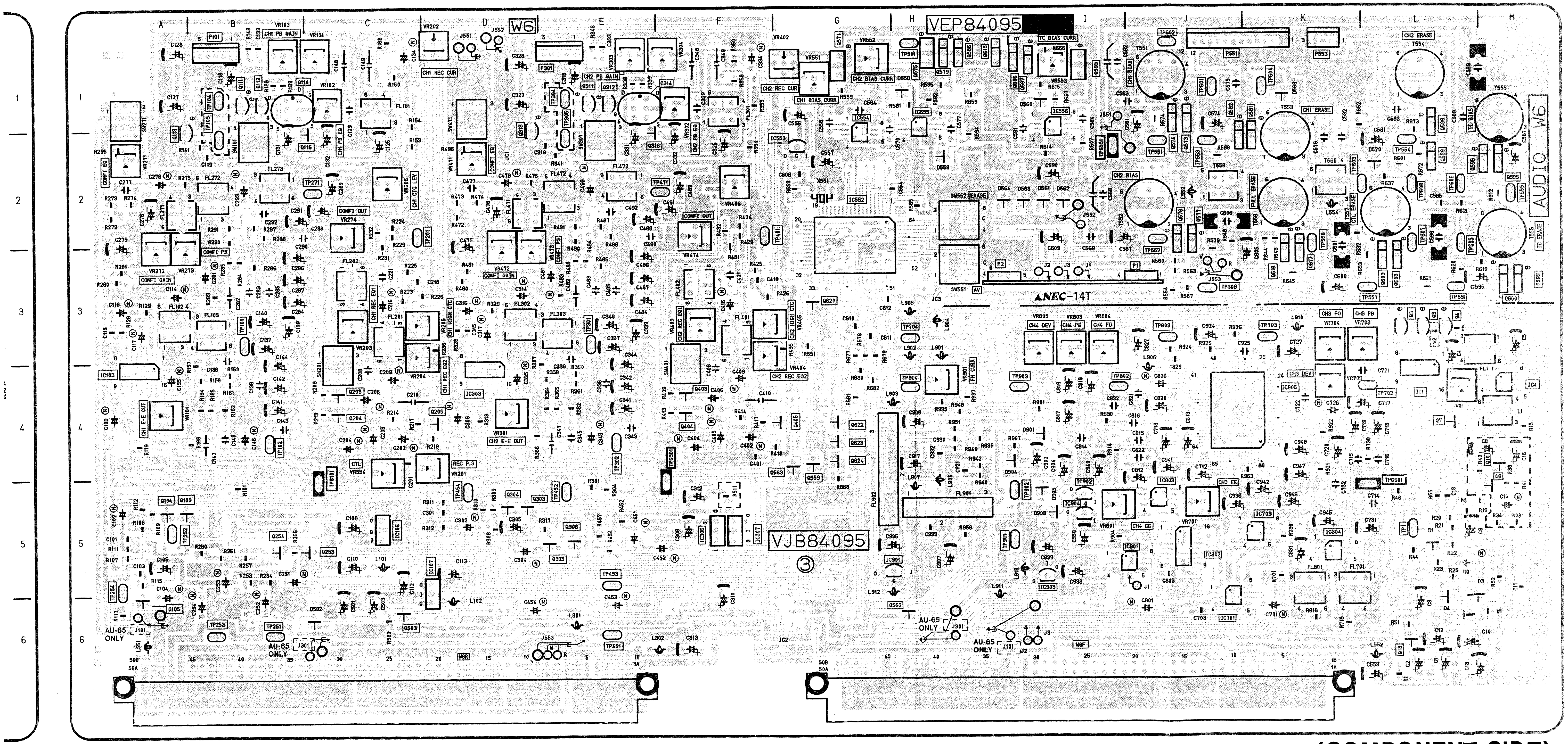
VEP84095
W6
AUDIO W6
VJB84095
③
▲NEC-14T
CH1 PB GAIN
CH2 PB GAIN
CH1 REC CUR
CH2 REC CUR
CH1 BIAS CURR
CH2 BIAS CURR
TC BIAS CURR
CH1 BIAS
CH2 BIAS
CH1 ERASE
CH2 ERASE
FULL ERASE
CTL ERASE
TC ERASE
TC BIAS
CH3 FO
CH3 PB
CH3 DEV
CH3 EE
CH4 DEV
CH4 PB
CH4 FO
CH4 EE
CONFI EQ
CONFI GAIN
CONFI PB
CONFI OUT
CH1 PB EQ
CH2 PB EQ
CH1 REC EQ1
CH1 REC EQ2
CH2 REC EQ1
CH2 REC EQ2
CH1 HIGH CTC
CH2 HIGH CTC
CH1 CTC LEV
CH1 E-E OUT
CH2 E-E OUT
CTL
REC P.S
FM CAR
ERASE
AU-65 ONLY
A
B
C
D
E
F
G
H
I
J
K
L
M
1
2
3
4
5
6

E)

(COMPONENT SIDE)

REVERSE SIDE

B0 MOTHER2 P.C.BOARD
B1 SYSTEM CONTROL P.C.BOA

B0(MOTHER 2)P.C.BOARD

TYPE \ MODEL	AU-65H	AU-63H	AU-62H
NTSC	VEP80549H	VEP80549K	VEP80549J
PAL	VEP80549H	VEP80549K	VEP80549J

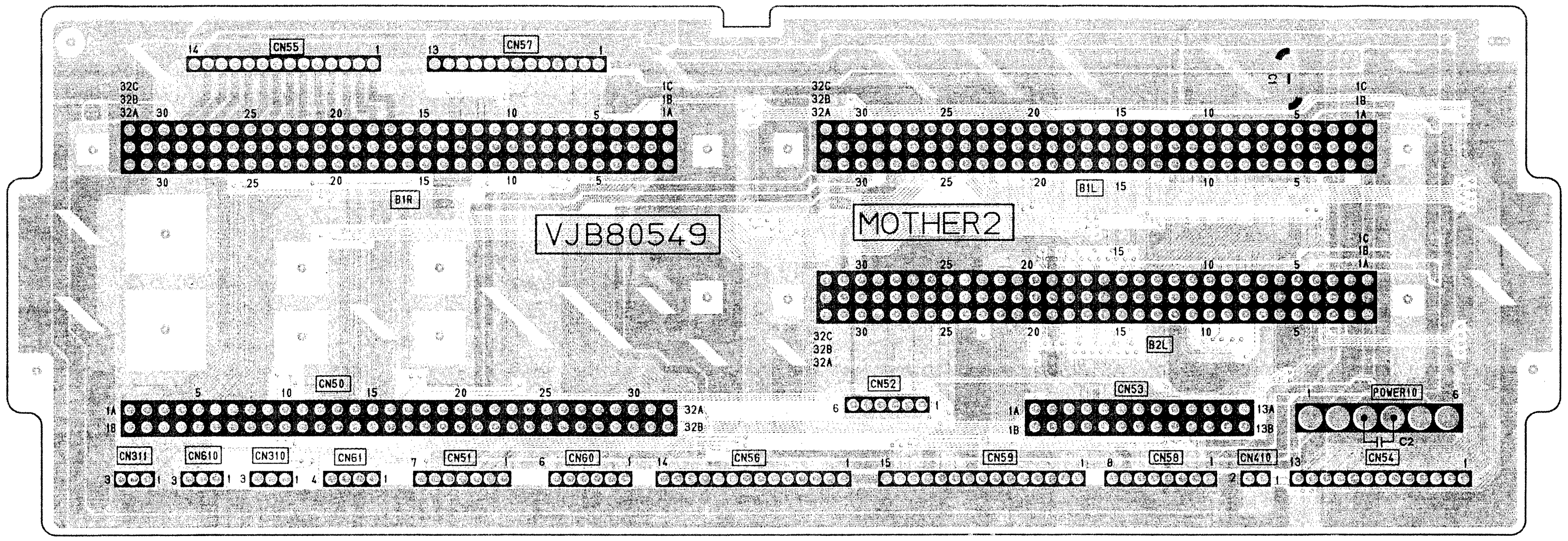

CN55
CN57
B1R
B1L
B2L
VJB80549
MOTHER2
CN50
CN52
CN53
POWER10
C2
CN311
CN610
CN310
CN61
CN51
CN60
CN56
CN59
CN58
CN410
CN54
32C
32B
32A
1C
1B
1A
13A
13B

(FOIL SIDE)

CHIP PART INFORMATION

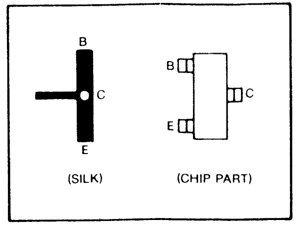

B
C
E
(SILK)
(CHIP PART)

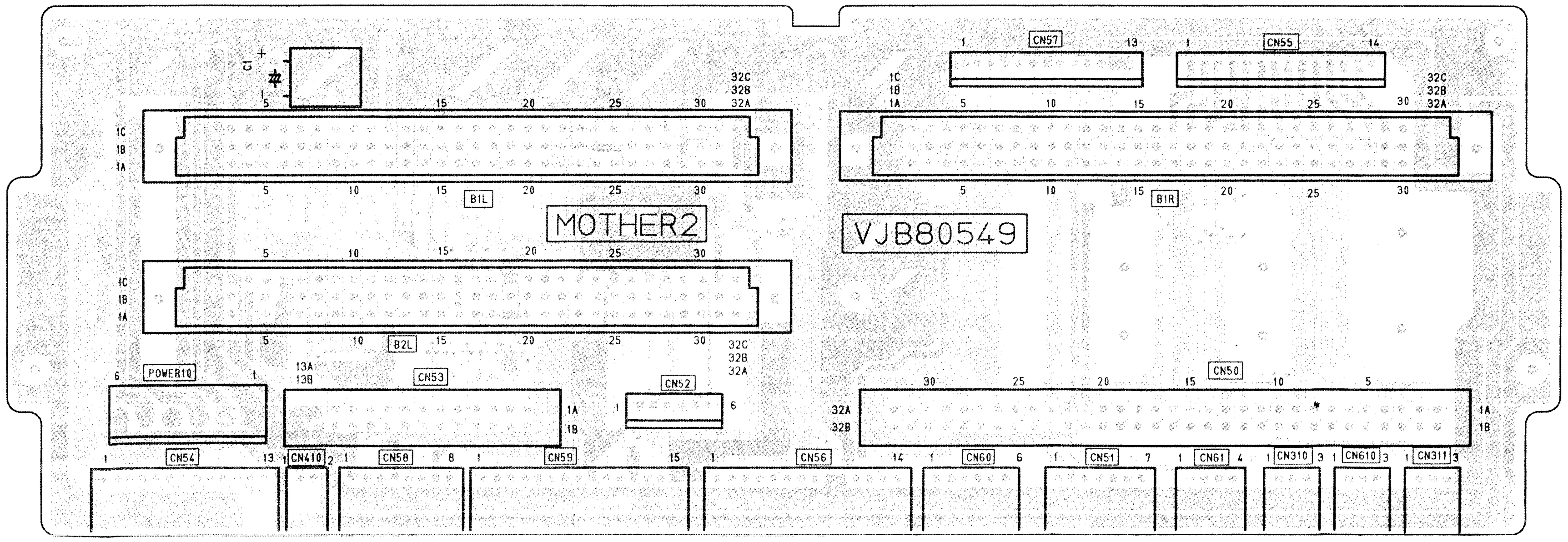

C1
CN57
CN55
B1L
B1R
MOTHER2
VJB80549
B2L
POWER10
CN53
CN52
CN50
CN54
CN410
CN58
CN59
CN56
CN60
CN51
CN61
CN310
CN610
CN311
32C
32B
32A
1C
1B
1A
13A
13B

(COMPONENT SIDE)

1 2 3 4 5 6 7

P.C. Board Location

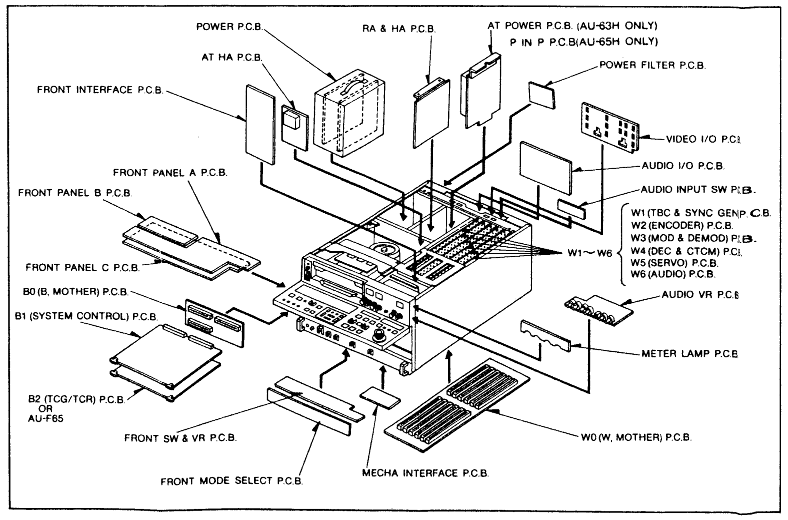

POWER P.C.B.
RA & HA P.C.B.
AT POWER P.C.B. (AU-63H ONLY)
P IN P P.C.B(AU-65H ONLY)
AT HA P.C.B.
POWER FILTER P.C.B.
FRONT INTERFACE P.C.B.
VIDEO I/O P.C.B.
AUDIO I/O P.C.B.
FRONT PANEL A P.C.B.
FRONT PANEL B P.C.B.
AUDIO INPUT SW P.C.B.
W1 (TBC & SYNC GEN) P.C.B.
W2 (ENCODER) P.C.B.
W3 (MOD & DEMOD) P.C.B.
W4 (DEC & CTCM) P.C.B.
W5 (SERVO) P.C.B.
W6 (AUDIO) P.C.B.
W1～W6
FRONT PANEL C P.C.B.
B0 (B, MOTHER) P.C.B.
AUDIO VR P.C.B.
B1 (SYSTEM CONTROL) P.C.B.
METER LAMP P.C.B.
B2 (TCG/TCR) P.C.B.
OR
AU-F65
FRONT SW & VR P.C.B.
W0 (W, MOTHER) P.C.B.
FRONT MODE SELECT P.C.B.
MECHA INTERFACE P.C.B.

B1(SYSTEM CONTROL) P.C.BOARD

TYPE \ MODEL	AU-65H	AU-63H	AU-62H
NTSC	VEP86121A	VEP86121C	VEP86121B
PAL	VEP86121D	VEP86121F	VEP86121E

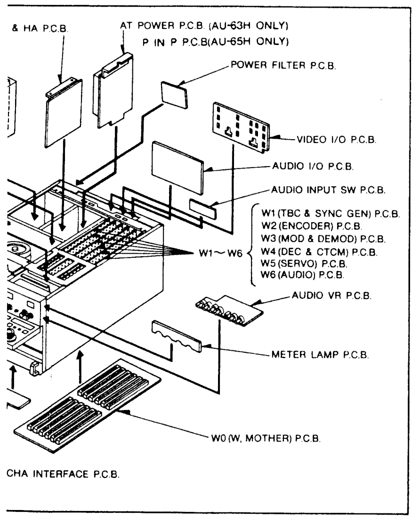
& HA P.C.B.
AT POWER P.C.B. (AU-63H ONLY)
P IN P P.C.B(AU-65H ONLY)
POWER FILTER P.C.B.
VIDEO I/O P.C.B.
AUDIO I/O P.C.B.
AUDIO INPUT SW P.C.B.
W1~W6
W1 (TBC & SYNC GEN) P.C.B.
W2 (ENCODER) P.C.B.
W3 (MOD & DEMOD) P.C.B.
W4 (DEC & CTCM) P.C.B.
W5 (SERVO) P.C.B.
W6 (AUDIO) P.C.B.
AUDIO VR P.C.B.
METER LAMP P.C.B.
W0 (W, MOTHER) P.C.B.
CHA INTERFACE P.C.B.

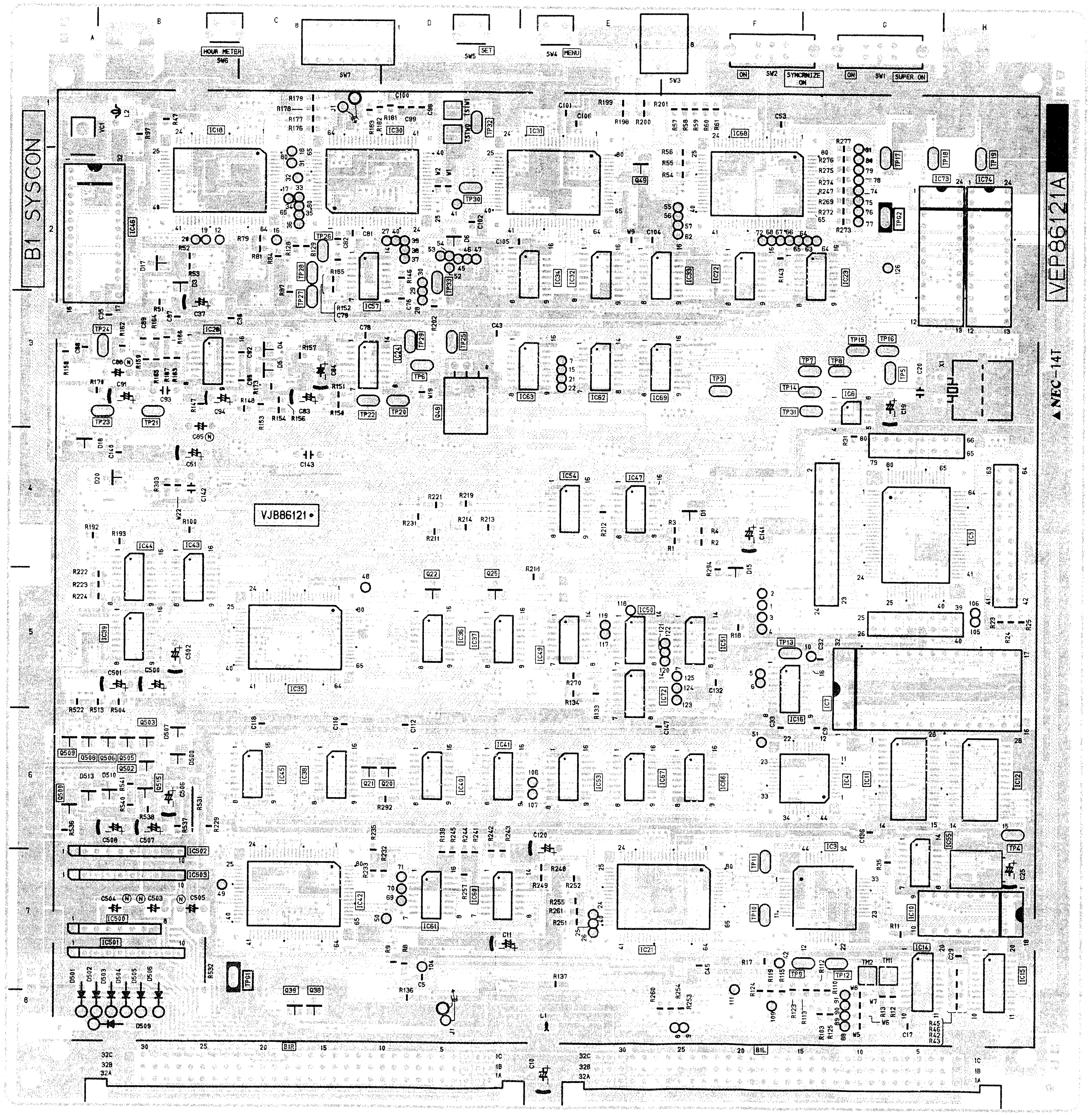
B1 SYSCON
VEP86121A
VJB86121
NEC-14T
HOUR METER
SW6
SW7
SET
SW5
SW4
MENU
SW3
ON
SW2
SYNCRONIZE ON
SW1
SUPER ON
B1R
B1L

(COMPONENT SIDE)

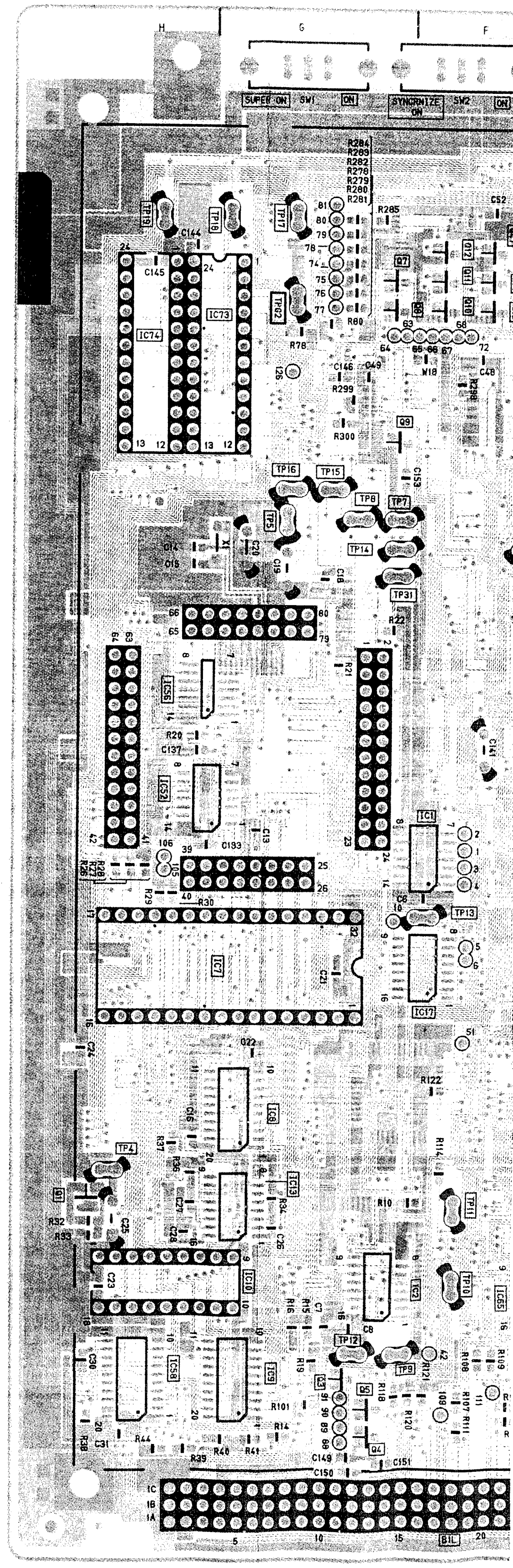
SUPER ON
SW1
SYNCRONIZE ON
SW2
B1L

.BOARD

MODEL TYPE	AU-65H	AU-63H	AU-62H
NTSC	VEP86121A	VEP86121C	VEP86121B
PAL	VEP86121D	VEP86121F	VEP86121E

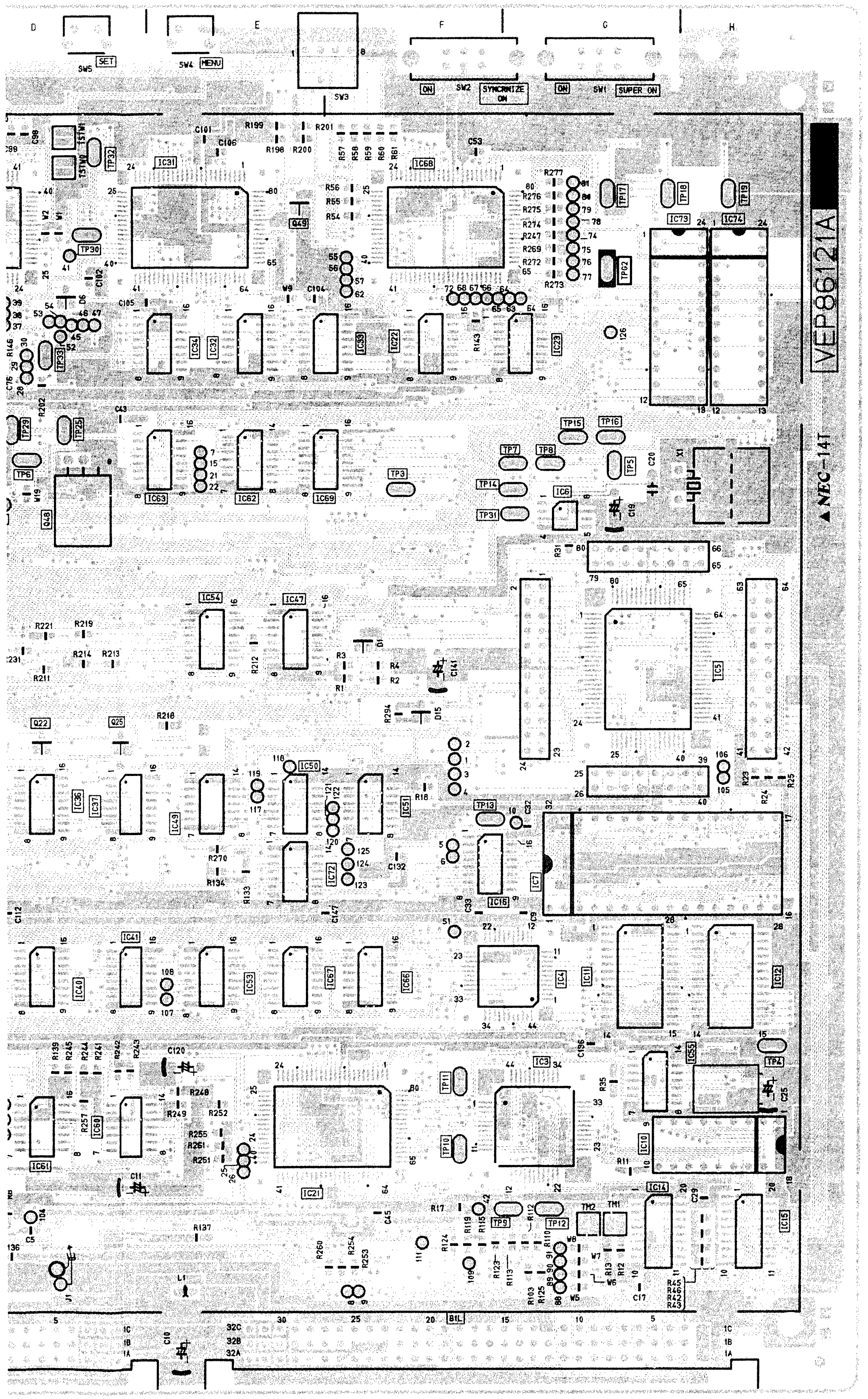

VEP86121A
NEC-14T
SW5
SW4
SW3
SW2
SW1
SET
MENU
SYNCHRONIZE ON
SUPER ON
B1L

(COMPONENT SIDE)

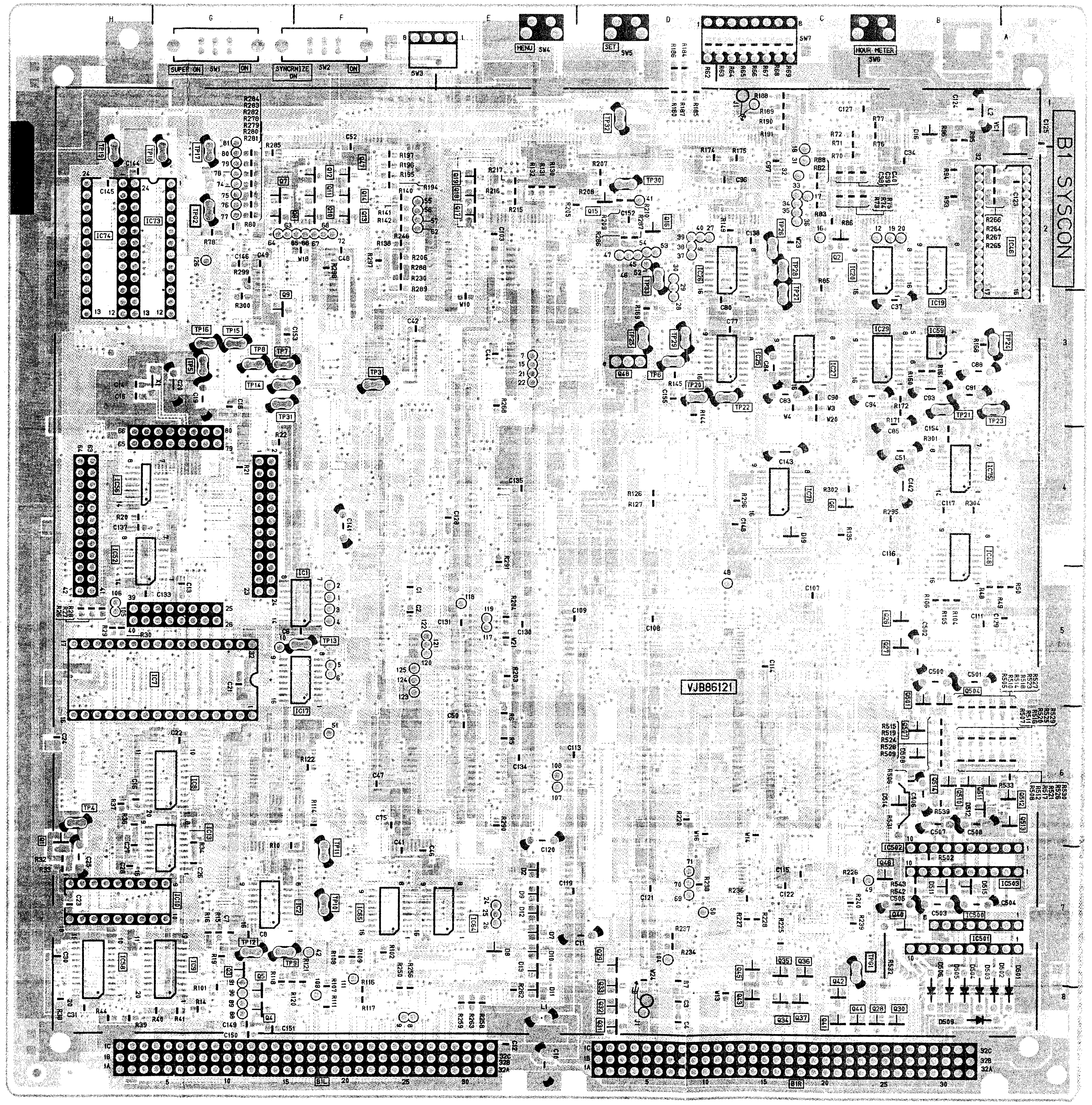

B1 SYSCON
VJB86121
SUPER ON
SYNCHRONIZE ON
MENU
SET
HOUR METER
SW1
SW2
SW3
SW4
SW5
SW6
SW7
B1L
B1R

(FOIL SIDE)

B1 SYSCON P.C.BOARD

COMPONENT SIDE

TRANSISTOR	
Q20	D-6
Q21	C-6
Q22	D-5
Q25	D-5
Q38	C-8
Q39	C-8
Q48	D-3
Q49	E-2
Q500	A-6
Q502	B-6
Q503	B-6
Q505	B-6
Q506	B-6
Q508	A-6
Q509	A-6
Q515	B-6

INTEGRATED CIRCUIT	
IC3	G-7
IC4	G-6
IC5	G-4
IC6	G-3
IC7	G-5
IC10	H-7
IC11	G-6
IC12	H-6
IC14	G-7
IC15	H-7
IC16	F-5
IC18	B-2
IC21	F-7
IC22	F-2
IC23	G-2
IC24	C-3
IC28	B-3
IC30	C-2
IC31	E-2
IC32	E-2
IC33	F-2
IC34	E-2
IC35	C-5
IC36	D-5
IC37	D-5
IC38	C-6
IC39	B-5
IC40	D-6
IC41	D-6
IC42	C-7
IC43	B-5
IC44	B-5
IC45	C-6
IC46	B-2
IC47	E-4
IC49	E-5
IC50	E-5
IC51	F-5
IC53	E-6
IC54	E-4
IC55	G-7
IC57	C-2
IC60	D-7
IC61	D-7
IC62	E-3
IC63	E-3
IC66	F-6
IC67	E-6
IC68	F-2
IC69	E-3
IC72	E-5
IC73	H-2
IC74	H-2
IC500	B-7
IC501	B-7
IC502	B-7
IC503	B-7

TEST POINT	
TP3	F-3
TP4	H-6
TP5	G-3
TP6	D-3
TP7	G-3
TP8	G-3
TP9	G-7
TP10	F-7
TP11	F-7
TP12	G-7
TP13	F-5
TP14	G-3
TP15	G-3
TP16	G 3
TP17	G-2
TP18	G-2
TC19	H-2
TC20	D-3
TC21	B-3
TC22	C-3
TC23	B-3
TC24	B-3
TC25	D-3
TC26	C-2
TC27	C-3
TC28	C-2
TC29	D-3
TC30	D-2
TC31	G-3
TC32	D-1
TC33	D-2
TPG1	C-7
TPG2	G-2

ADJUSTMENT	
VC1	A-1

FOIL SIDE

TRANSISTOR	
Q1	H-6
Q2	C-2
Q3	G-7
Q4	G-8
Q5	G-8
Q6	C-4
Q7	G-2
Q8	G-2
Q9	G-3
Q10	F-2
Q11	F-2
Q12	F-2
Q13	F-2
Q14	F-2
Q15	D-2
Q16	D-2
Q17	E-2
Q18	E-2
Q19	E-2
Q26	B-5
Q27	B-5
Q28	B-8
Q29	D-7
Q30	B-8
Q31	D-8
Q32	D-8
Q33	D-8
Q34	C-8
Q35	C-7
Q36	C-7
Q37	C-8
Q40	B-7
Q41	C-8
Q42	C-8
Q43	C-8
Q44	B-8
Q45	C-7
Q46	B-7
Q47	F-2
Q501	B-5
Q504	B-5
Q507	B-6
Q510	B-6
Q511	B-6
Q512	A-6
Q513	A-6
Q514	B-6

INTEGRATED CIRCUIT	
IC1	F-5
IC2	G-7
IC8	G-6
IC9	G-7
IC13	G-6
IC17	F-5
IC19	B-2
IC20	B-2
IC25	C-3
IC26	C-2
IC27	C-3
IC29	B-3
IC48	B-4
IC52	H-4
IC56	H-4
IC58	H-7
IC59	B-3
IC64	E-7
IC65	F-7
IC71	C-4
IC75	B-4

VIDEO I/O P.C.BOARD

TYPE \ MODEL	AU-65H	AU-63H	AU-62H
NTSC	VEP83174A	VEP83174B	VEP83174B
PAL	VEP83174C	VEP83174B	VEP83174B

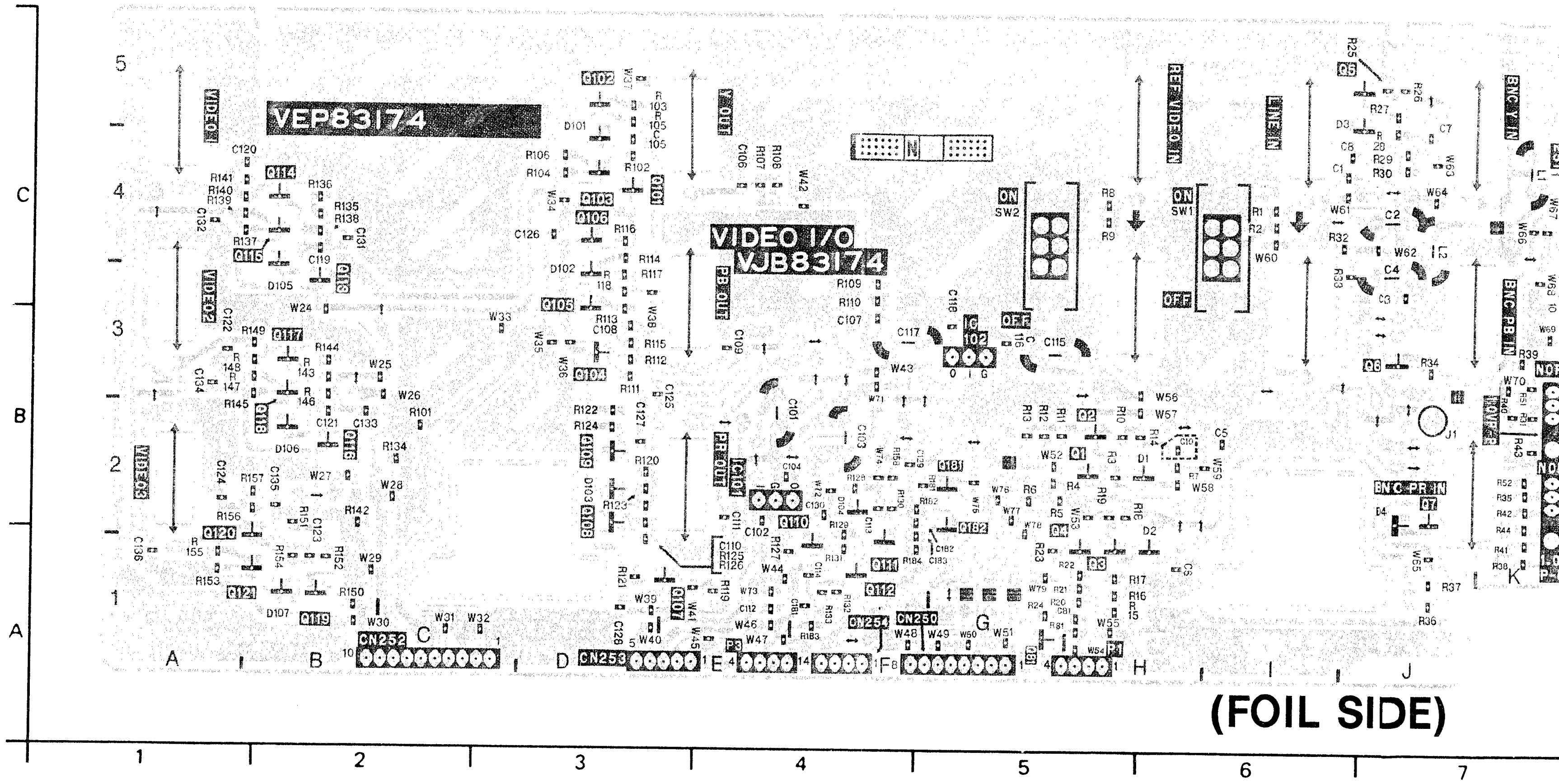

(FOIL SIDE)

VIDEO I/O P.C.BOARD

FOIL SIDE			
TRANSISTOR			
Q1	H-2	Q111	F-1
Q2	H-2	Q112	F-1
Q3	H-1	Q113	B-3
Q4	H-1	Q114	B-4
Q5	J-5	Q115	B-4
Q6	J-3	Q116	B-2
Q7	J-2	Q117	B-3
Q81	G-1	Q118	B-3
Q101	D-4	Q119	B-1
Q102	D-5	Q120	B-1
Q103	D-4	Q121	B-1
Q104	D-3	Q181	G-2
Q105	D-3	Q182	G-2
Q106	D-4		
Q107	E-1		
Q108	D-2		
Q109	D-2		
Q110	F-1		

INTEGRATED CIRCUIT	
IC101	E-2
IC102	G-3
CONNECTOR	
CN250	G-1
CN251	K-4
CN252	C-1
CN253	D-1
CN254	F-1
P1	H-1
P3	E-1

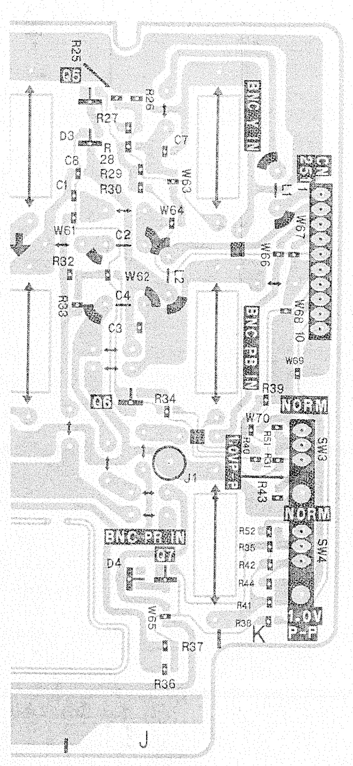
R25
Q5
R26
R27
D3
R
C8
R28
C1
R29
R30
C7
W63
W64
W61
C2
R32
W62
C4
R33
C3
Q6
R34
W66
W67
W68
W69
W70
BNC Y IN
BNC PB IN
BNC PR IN
CN251
R39
NORM
SW3
SW4
NORM
J1
R52
R35
R42
R44
R41
R38
R37
R36
R43
C47
D4
W85
1.0V P-P
K
J

IL SIDE)

7

C. BOARD

	INTEGRATED CIRCUIT	
-1	IC101	E-2
-1	IC102	G-3
-3		
-4	CONNECTOR	
-4	CN250	G-1
-2	CN251	K-4
-3	CN252	C-1
-3	CN253	D-1
-1	CN254	F-1
-1		
-1	P1	H-1
-2	P3	E-1
-2		

AUDIO I/O P.C.BOARD

TYPE \ MODEL	AU-65H	AU-63H	AU-62H
NTSC	VEP84094G	VEP84094C	VEP84094C
PAL	VEP84094G	VEP84094C	VEP84094C

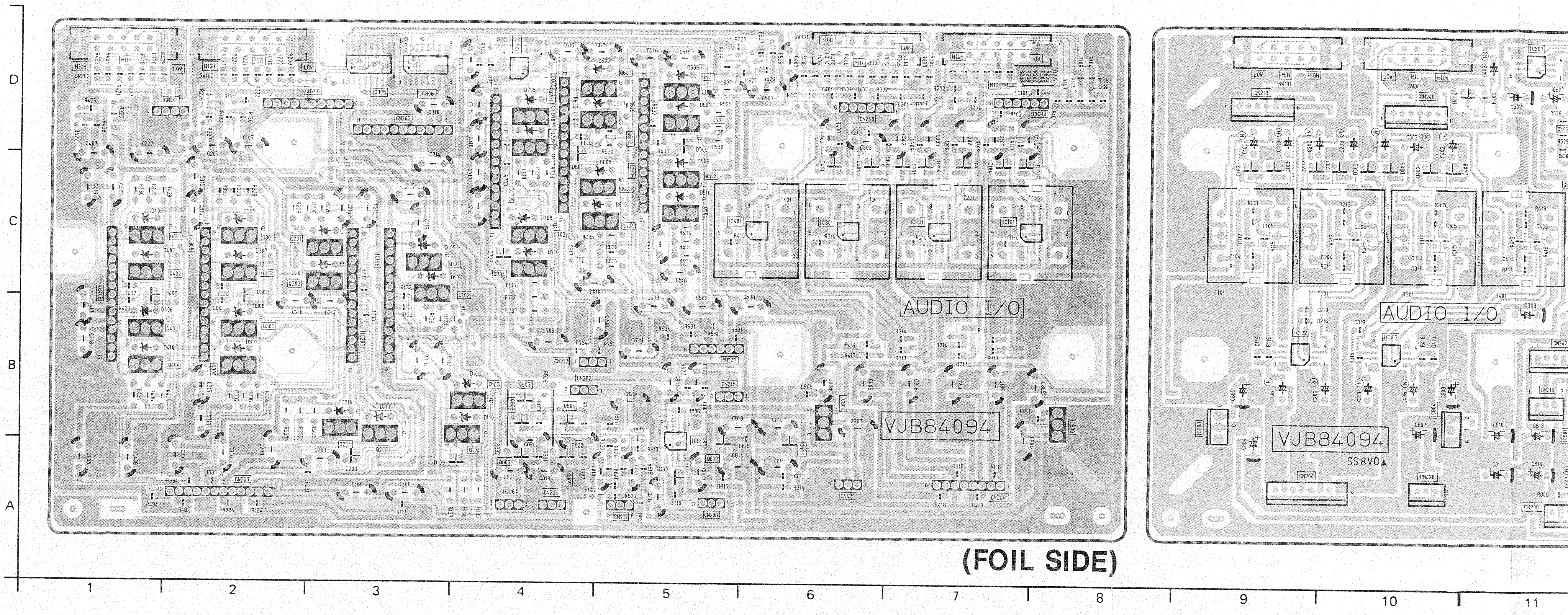
D
C
B
A
1
2
3
4
5
6
7
8
9
10
11
AUDIO I/O
VJB84094
AUDIO I/O
VJB84094
SS8V0▲
HIGH
MID
LOW
SW101
SW102
SW301
IC101
IC201
IC301
IC401
IC102
IC302
T101
T201
T301
T401
CN200
CN201
CN202
CN203
CN204
CN205
CN206
CN207
CN208
CN211
CN212
CN213
CN215
CN240
CN242
CN420

(FOIL SIDE)

AUDIO I/O

FOIL SIDE		Q504	C-5	IC301	C-6	CN206	A-4	COMPONENT SIDE	
TRANSISTOR		Q601	D-5	IC305	C-2	CN207	A-2	INTEGRATED CIRCUIT	
Q101	C-3	Q602	D-5	IC401	C-6	CN208	A-5	IC102	B-10
Q102	C-3	Q603	C-5	IC405	C-1	CN211	A-5	IC103	D-15
Q103	B-4	Q604	C-5	IC505	C-5	CN212	B-5	IC302	B-10
Q104	B-4	Q701	D-4	IC605	D-4	CN213	D-8	IC303	D-16
Q201	C-3	Q702	D-4	IC703	D-4	CN215	B-6	IC503	D-11
Q202	C-3	Q703	C-4	IC705	C-4	CN240	D-6	IC704	D-13
Q203	B-3	Q704	C-4	IC802	B-5	CN242	B-5	IC801	B-12
Q204	B-3	Q801	A-6	IC803	B-8	CN420	A-6	IC808	B-12
Q301	C-2	Q802	A-5	IC804	B-6				
Q302	C-2	Q803	B-4	IC805	D-3				
Q303	B-2	Q804	B-4	IC806	D-3				
Q304	B-2	Q805	A-4						
Q401	C-2	Q806	B-4	CONNECTOR					
Q402	C-2	Q807	A-4	CN200	D-3				
Q403	B-2	INTEGRATED CIRCUIT		CN201	D-2				
Q404	B-2	IC101	C-8	CN202	B-5				
Q501	D-5	IC105	C-3	CN203	D-3				
Q502	D-5	IC201	C-7	CN204	A-7				
Q503	C-5	IC205	B-3	CN205	A-4				

ADDRESS INFORMATION

CHIP PART INFORMAT

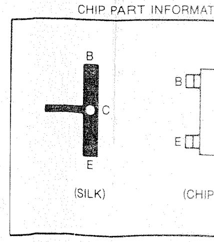
B
C
E
B
E
(SILK)
(CHIP

5H	AU-63H	AU-62H
094G	VEP84094C	VEP84094C
094G	VEP84094C	VEP84094C

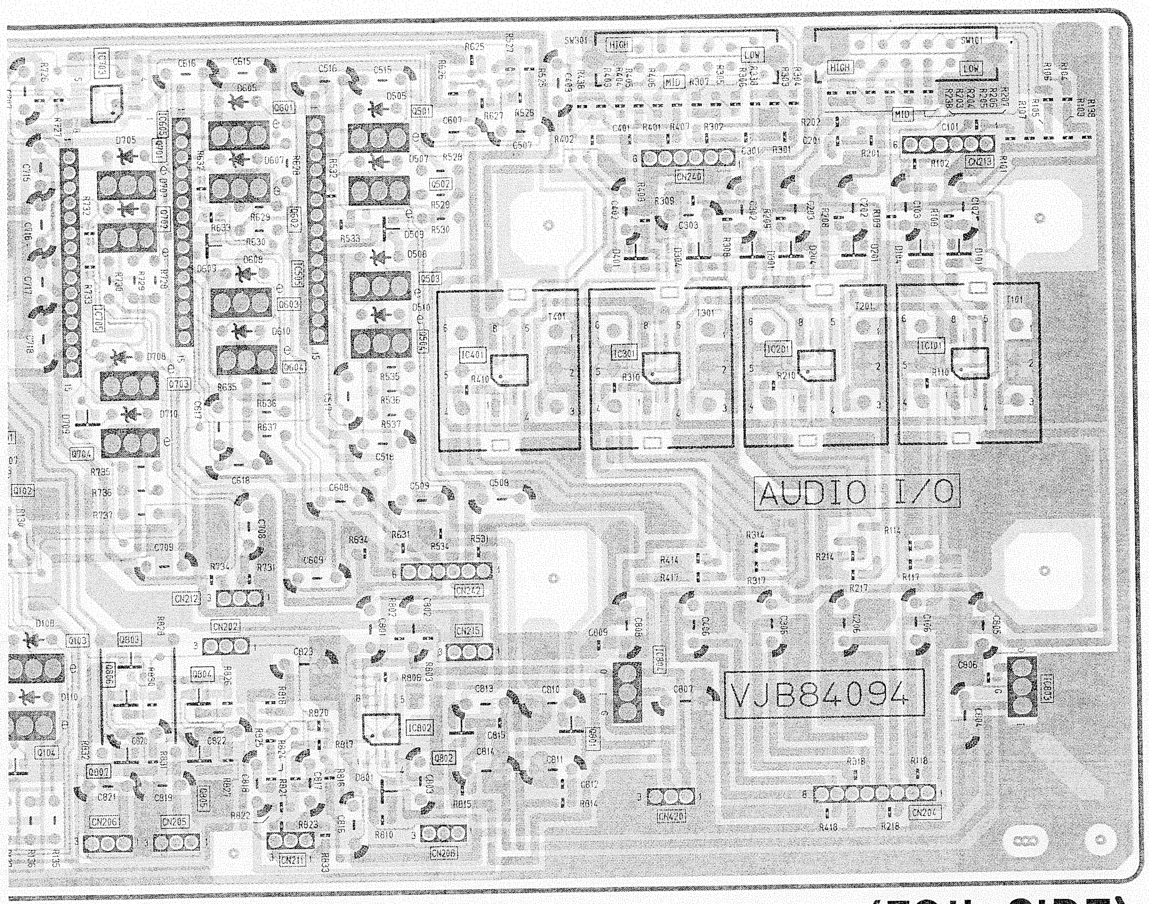
AUDIO I/O
VJB84094

(FOIL SIDE)

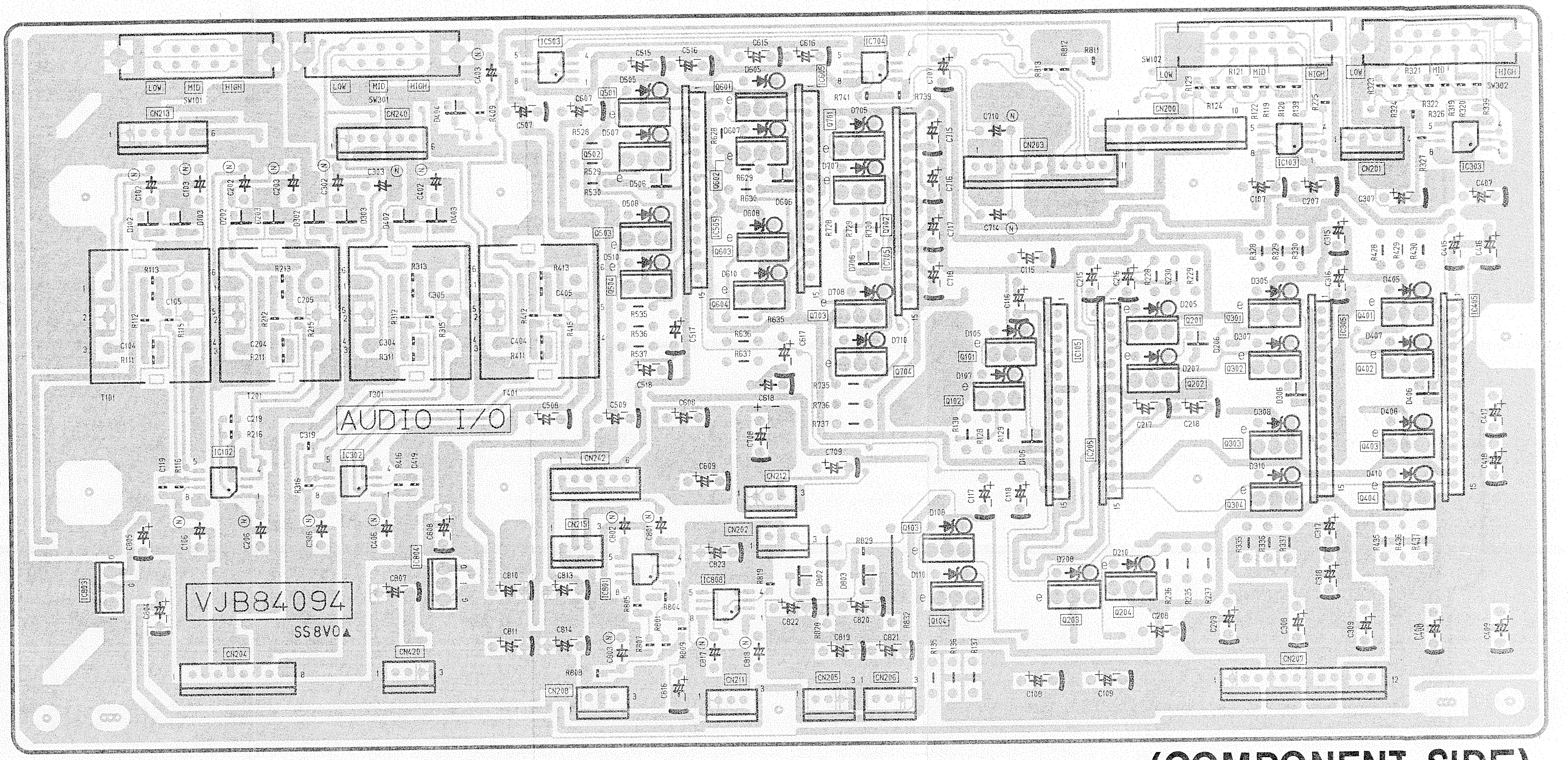
AUDIO I/O
VJB84094
SS8V0▲

(COMPONENT SIDE)

4 5 6 7 8 9 10 11 12 13 14 15 16

AUDIO I/O

FOIL SIDE TRANSISTOR	
Q101	C-3
Q102	C-3
Q103	B-4
Q104	B-4
Q201	C-3
Q202	C-3
Q203	B-3
Q204	B-3
Q301	C-2
Q302	C-2
Q303	B-2
Q304	B-2
Q401	C-2
Q402	C-2
Q403	B-2
Q404	B-2
Q501	D-5
Q502	D-5
Q503	C-5
Q504	C-5
Q601	D-5
Q602	D-5
Q603	C-5
Q604	C-5
Q701	D-4
Q702	D-4
Q703	C-4
Q704	C-4
Q801	A-6
Q802	A-5
Q803	B-4
Q804	B-4
Q805	A-4
Q806	B-4
Q807	A-4

INTEGRATED CIRCUIT	
IC101	C-8
IC105	C-3
IC201	C-7
IC205	B-3
IC301	C-6
IC305	C-2
IC401	C-6
IC405	C-1
IC505	C-5
IC605	D-4
IC703	D-4
IC705	C-4
IC802	B-5
IC803	B-8
IC804	B-6
IC805	D-3
IC806	D-3

CONNECTOR	
CN200	D-3
CN201	D-2
CN202	B-5
CN203	D-3
CN204	A-7
CN205	A-4
CN206	A-4
CN207	A-2
CN208	A-5
CN211	A-5
CN212	B-5
CN213	D-8
CN215	B-6
CN240	D-6
CN242	B-5
CN420	A-6

COMPONENT SIDE INTEGRATED CIRCUIT	
IC102	B-10
IC103	D-15
IC302	B-10
IC303	D-16
IC503	D-11
IC704	D-13
IC801	B-12
IC808	B-12

ADDRESS INFORMATION

CHIP PART INFORMATION

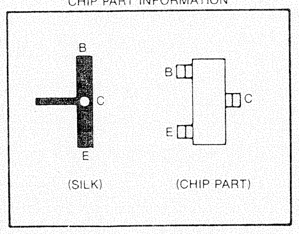
B
C
E
B
C
E
(SILK)
(CHIP PART)

P.C. Board Location

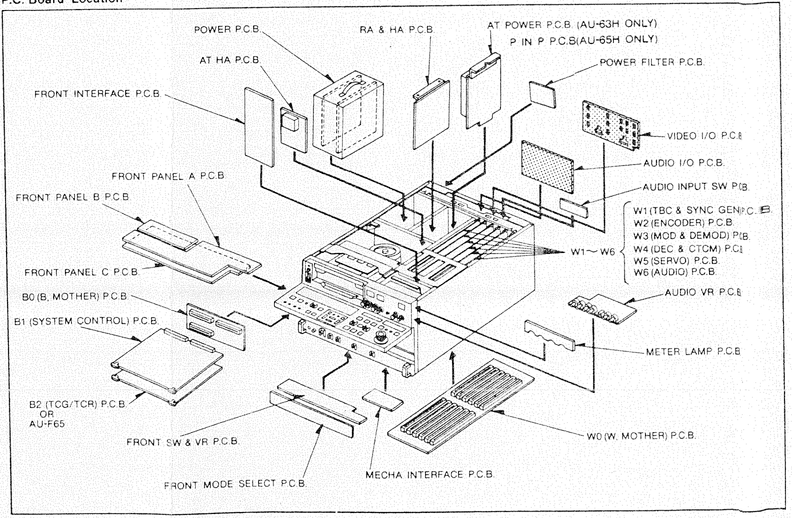
POWER P.C.B.
RA & HA P.C.B.
AT POWER P.C.B. (AU-63H ONLY)
P IN P P.C.B(AU-65H ONLY)
AT HA P.C.B.
POWER FILTER P.C.B.
FRONT INTERFACE P.C.B.
VIDEO I/O P.C.B
AUDIO I/O P.C.B.
FRONT PANEL A P.C.B.
AUDIO INPUT SW P.C.B.
FRONT PANEL B P.C.B.
W1 (TBC & SYNC GEN) P.C.B.
W2 (ENCODER) P.C.B.
W3 (MOD & DEMOD) P.C.B.
W4 (DEC & CTCM) P.C.B
W5 (SERVO) P.C.B.
W6 (AUDIO) P.C.B.
W1~W6
FRONT PANEL C P.C.B.
B0 (B, MOTHER) P.C.B.
AUDIO VR P.C.B
B1 (SYSTEM CONTROL) P.C.B.
METER LAMP P.C.B
B2 (TCG/TCR) P.C.B.
OR
AU-F65
FRONT SW & VR P.C.B.
W0 (W. MOTHER) P.C.B.
MECHA INTERFACE P.C.B.
FRONT MODE SELECT P.C.B.

REVERSE SIDE

FRONT PANEL A P.C.BO
FRONT PANEL B P.C.BO

FRONT INTERFACE P.C.BOARD

MODEL / TYPE	AU-65H	AU-63H	AU-62H
NTSC	VEP80553D	VEP80553C	VEP80553B
PAL	VEP80631D	VEP80631B	VEP80631C

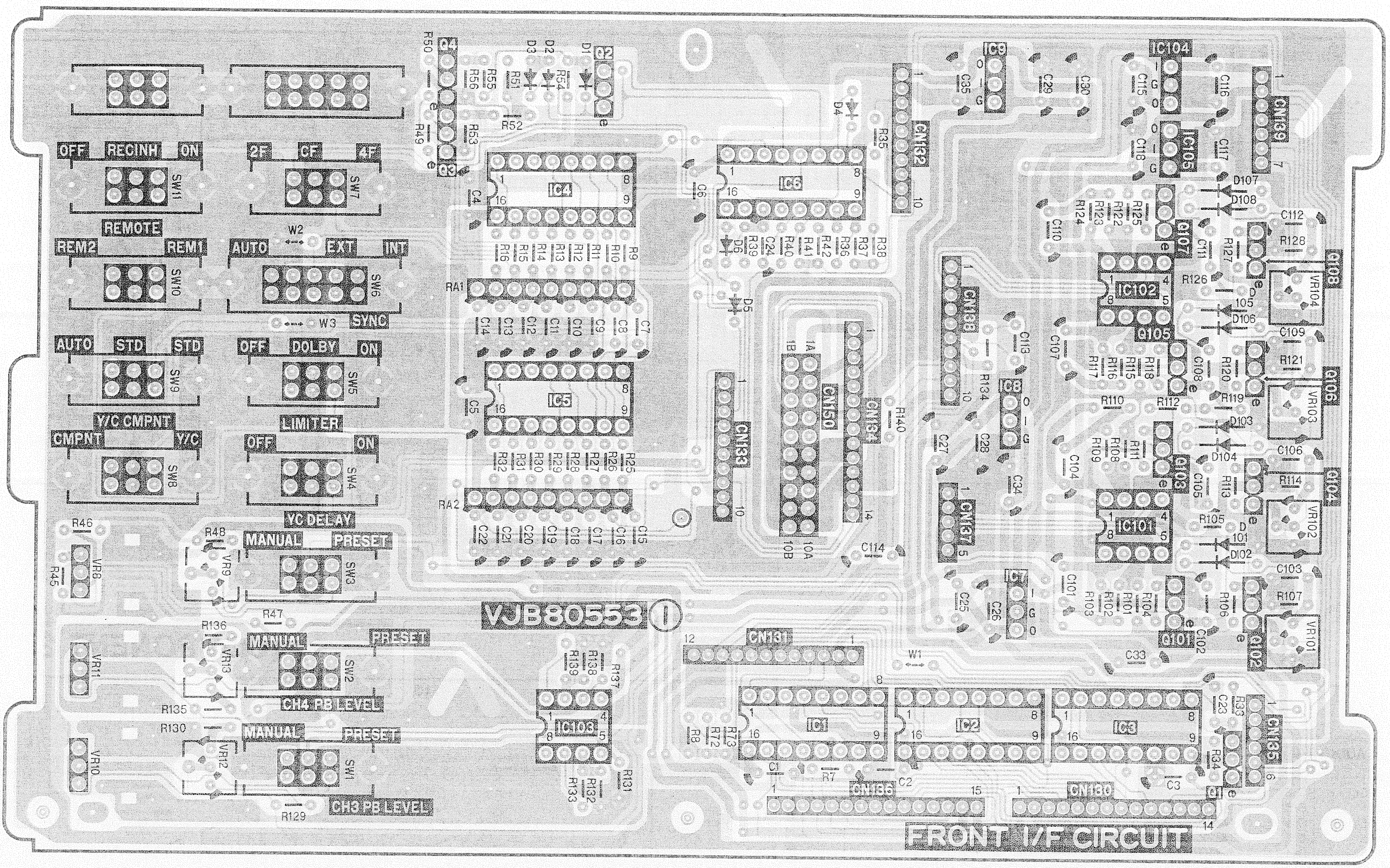

OFF RECINH ON
SW11
2F CF 4F
SW7
REMOTE
REM2 REM1
SW10
AUTO EXT INT
W2
SW6
W3 SYNC
AUTO STD STD
SW9
OFF DOLBY ON
SW5
Y/C CMPNT
CMPNT Y/C
SW8
LIMITER
OFF ON
SW4
YC DELAY
MANUAL PRESET
SW3
R46 R45 VR8
R48 VR9
R47
R136 VR13
MANUAL PRESET
SW2
CH4 PB LEVEL
VR11
R135 R130
MANUAL PRESET
VR12
SW1
CH3 PB LEVEL
VR10
R129
Q1 Q2 Q3
R50 R49 R55 R56 R51 R54 R52 R53
D1 D2 D3 D4 D5 D6
IC4 IC5 IC6 IC8 IC9 IC101 IC102 IC103 IC104 IC105 IC106 IC107
RA1 RA2
CN131 CN132 CN133 CN134 CN135 CN136 CN137 CN138 CN139 CN150 CN130
IC1 IC2 IC3
Q101 Q102 Q103 Q104 Q105 Q106 Q108
VR101 VR102 VR103 VR104
D101 D102 D103 D104 D105 D106 D107 D108
VJB80553
W1
FRONT I/F CIRCUIT

(FOIL SIDE)

FRONT INTERFACE									
FOIL SIDE		Q105	E-8	IC6	F-5	VR9	D-2	CN134	E-6
TRANSISTOR		Q106	E-8	IC7	D-7	VR101	D-9	CN135	C-8
Q1	C-8	Q107	F-8	IC8	E-7	VR102	D-9	CN136	C-6
Q2	G-4	Q108	F-8	IC9	G-7	VR103	E-9	CN137	D-6
Q3	G-3	**INTEGRATED CIRCUIT**		IC101	D-8	VR104	F-9	CN138	E-6
Q101	G-3	ID1	C-6	IC102	F-8	**CONNECTOR**		CN139	G-8
Q102	D-8	IC2	C-7	IC104	G-8	CN130	C-7	CN150	E-6
Q103	D-8	IC3	C-8	IC105	G-8	CN131	C-5		
Q104	E-8	IC4	F-4	**ADJUSTMENT**		CN132	G-6		
	E-8	IC5	E-4	VR8	D-1	CN133	E-5		

ADDRESS INFORMATION

P.C. Board Location

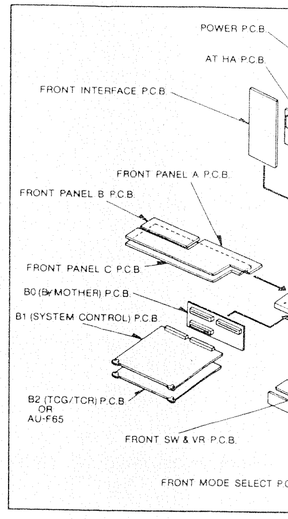

POWER P.C.B.
AT HA P.C.B.
FRONT INTERFACE P.C.B.
FRONT PANEL A P.C.B.
FRONT PANEL B P.C.B.
FRONT PANEL C P.C.B.
B0 (B/MOTHER) P.C.B.
B1 (SYSTEM CONTROL) P.C.B.
B2 (TCG/TCR) P.C.B. OR AU-F65
FRONT SW & VR P.C.B.
FRONT MODE SELECT P.C

FRONT PANEL A P.C

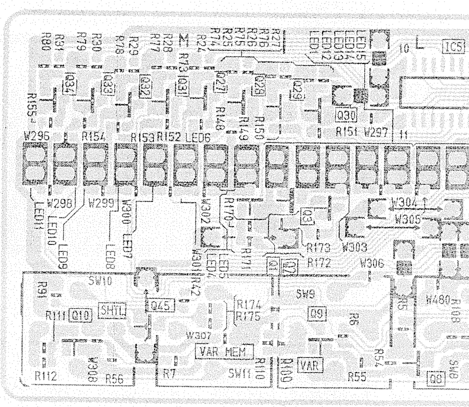

P.C. Board Location

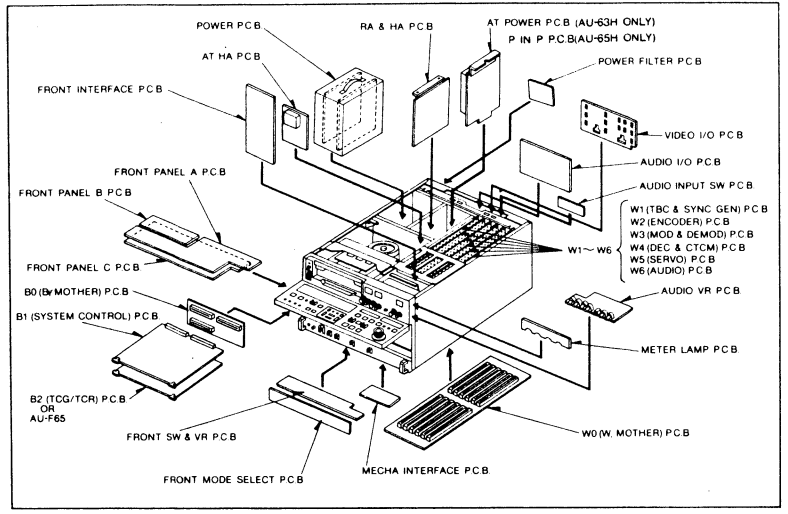

POWER P.C.B
RA & HA P.C.B
AT POWER P.C.B (AU-63H ONLY)
P IN P P.C.B(AU-65H ONLY)
AT HA P.C.B
POWER FILTER P.C.B
FRONT INTERFACE P.C.B
VIDEO I/O P.C.B
AUDIO I/O P.C.B
FRONT PANEL A P.C.B
AUDIO INPUT SW P.C.B
FRONT PANEL B P.C.B
W1 (TBC & SYNC GEN) P.C.B
W2 (ENCODER) P.C.B
W3 (MOD & DEMOD) P.C.B
W1~W6
W4 (DEC & CTCM) P.C.B
W5 (SERVO) P.C.B
W6 (AUDIO) P.C.B
FRONT PANEL C P.C.B
B0 (B MOTHER) P.C.B
AUDIO VR P.C.B
B1 (SYSTEM CONTROL) P.C.B
METER LAMP P.C.B
B2 (TCG/TCR) P.C.B
OR
AU-F65
FRONT SW & VR P.C.B
W0 (W. MOTHER) P.C.B
FRONT MODE SELECT P.C.B
MECHA INTERFACE P.C.B

CHIP PART INFORMATION

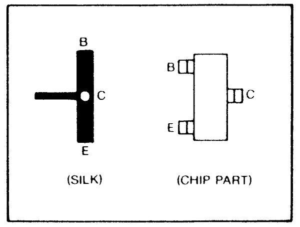

B
C
E
B
C
E
(SILK)
(CHIP PART)

FRONT PANEL A P.C.BOARD(FOR AU-65H)

MODEL / TYPE	AU-65H	AU-63H	AU-62H
NTSC	VEP86107A	VEP86086A	VEP86086A
PAL	VEP86107B	VEP86086A	VEP86086A

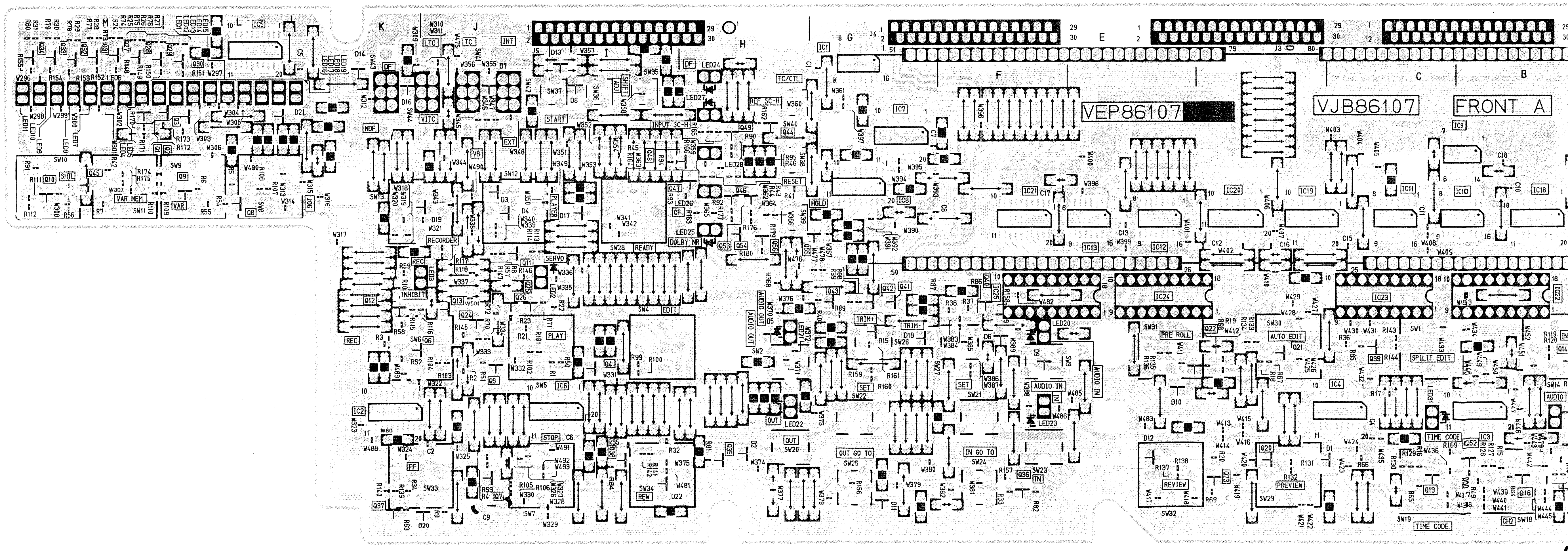

VEP86107
VJB86107
FRONT A

CHIP PART INFORMATION

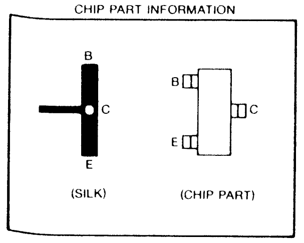
B
C
E
(SILK)
B
C
E
(CHIP PART)

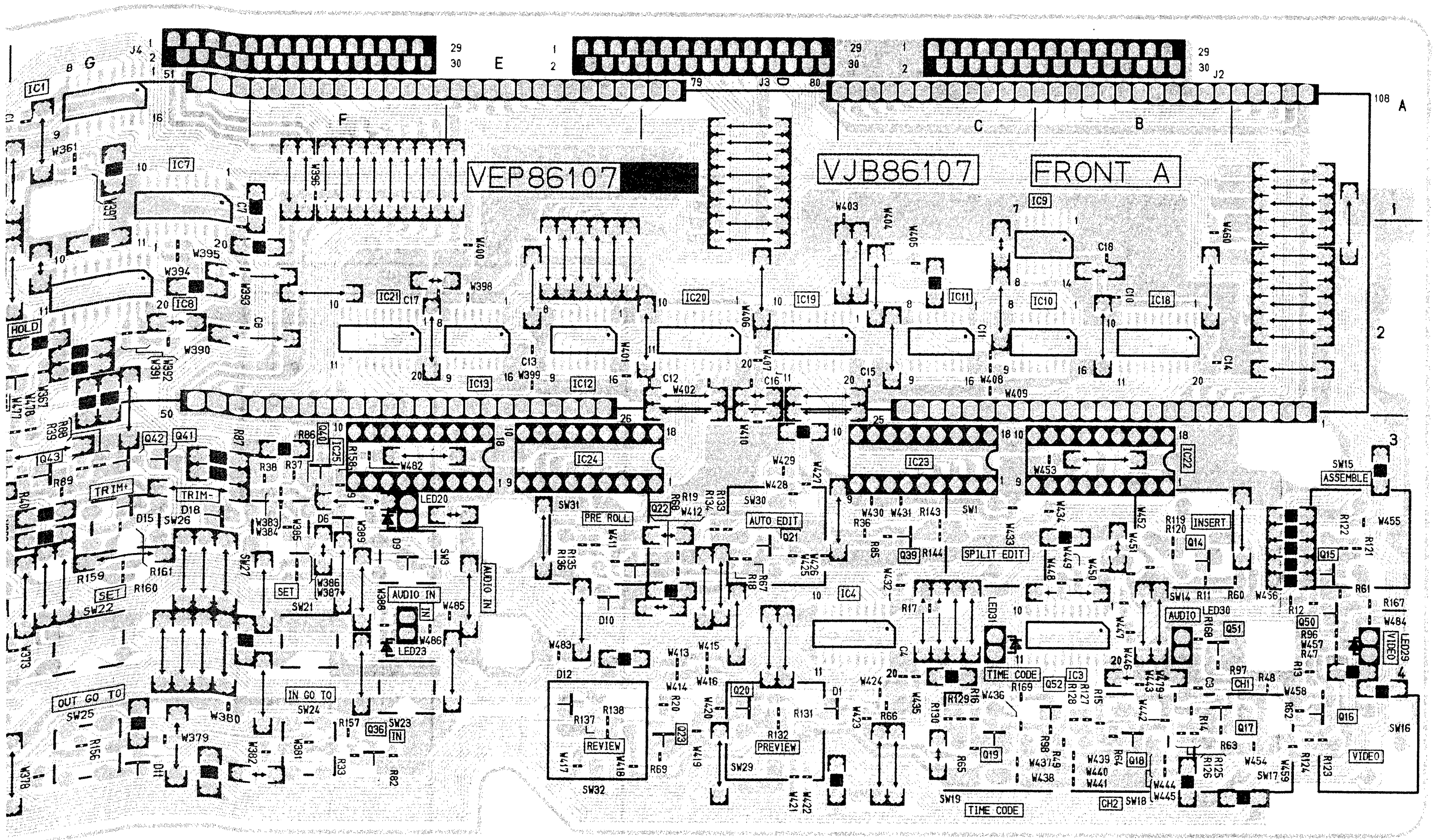
VEP86107
VJB86107
FRONT A
J4
J3
J2
IC1
IC7
IC8
IC9
IC10
IC11
IC12
IC13
IC18
IC19
IC20
IC21
IC22
IC23
IC24
IC25
IC3
IC4
HOLD
TRIM+
TRIM-
SET
OUT GO TO
IN GO TO
AUDIO IN
PRE ROLL
AUTO EDIT
SPILIT EDIT
INSERT
ASSEMBLE
AUDIO
VIDEO
TIME CODE
REVIEW
PREVIEW
CH1
CH2
A
B
C
D
E
F
G
1
2
3
4

(FOIL SIDE)

FRONT PANEL A

FOIL SIDE

TRANSISTOR		Q47	H-2
Q1	M-1	Q48	H-2
Q2	L-1	Q49	H-1
Q3	L-1	Q50	A-4
Q4	I-3	Q51	B-4
Q5	J-3	Q52	B-4
Q6	J-3	Q53	H-2
Q7	J-4	Q54	H-2
Q8	L-2	Q55	G-2
Q9	L-2	Q56	H-2
Q10	M-2		
Q11	J-2	INTEGRATED CIRCUIT	
Q12	K-3		
Q13	J-3	IC1	G-1
Q14	B-3	IC2	K-4
Q15	A-3	IC3	B-4
Q16	A-4	IC4	C-4
Q17	B-4	IC5	L-1
Q18	B-4	IC6	I-4
Q19	C-4	IC7	G-1
Q20	D-4	IC8	G-2
Q21	D-3	IC9	B-2
Q22	D-3	IC10	B-2
Q23	D-4	IC11	C-2
Q24	J-3	IC12	E-2
Q25	J-3	IC13	E-2
Q26	J-3	IC19	D-2
Q27	M-1	IC20	D-2
Q28	M-1	IC21	F-2
Q29	L-1	IC22	B-3
Q30	L-1	IC23	C-3
Q31	M-1	IC24	E-3
Q32	M-1	IC25	F-3
Q33	M-1		
Q34	M-1		
Q35	H-4		
Q36	F-4		
Q37	K-4		
Q38	I-4		
Q39	C-3		
Q40	F-3		
Q41	G-3		
Q42	G-3		
Q43	G-3		
Q44	M-1		
Q45	H-2		
Q46	H-2		

FRONT PANEL B

FOIL SIDE

TRANSISTOR		IC31	B-1	J3	J-1
Q1	M-3	IC32	G-3	J4	G-1
Q2	M-3	IC33	N-3		
Q3	L-2	IC34	M-4		
Q4	D-4	IC36	N-4		
Q5	C-4	IC37	E-3		
Q6	L-3	IC38	A-1		
Q7	L-3	IC39	M-4		
Q8	K-3	IC40	H-2		
Q9	M-3	IC41	J-2		
Q10	G-2	IC42	J-2		
Q11	C-1	IC43	K-2		
Q100	C-2	IC44	K-2		
Q101	D-2	IC45	L-2		
		IC46	L-2		
INTEGRATED CIRCUIT		IC47	L-2		
		IC48	M-2		
IC1	H-4	IC49	M-2		
IC2	H-3	IC50	G-1		
IC3	G-2	IC51	H-1		
IC4	G-3	IC52	J-1		
IC5	F-3	IC53	K-1		
IC6	G-3	IC54	L-1		
IC7	E-3	IC55	M-1		
IC8	F-3	IC56	M-1		
IC9	E-3	IC57	M-1		
IC10	K-2	IC58	N-1		
IC11	C-1	IC59	N-2		
IC12	D-1				
IC13	J-3	TEST POINT			
IC14	J-3	TP1	J-4		
IC15	J-2	TP6	J-3		
IC16	H-2	TP7	J-2		
IC17	H-3	TP12	C-4		
IC18	H-2	TP13	D-4		
IC19	F-2	TP14	L-4		
IC20	M-3	TP15	K-3		
IC21	M-3				
IC22	N-3	ADJUSTMENT			
IC23	M-3	VR1	M-4		
IC24	M-3	VR2	L-3		
IC25	L-3				
IC26	L-4	CONNECTOR			
IC27	E-2	P150	B-1		
IC28	D-3				
IC29	E-1	J1	C-2		
IC30	K-2	J2	L-1		

FRONT PANEL B P.C.BOARD(FOR AU-65H)

TYPE \ MODEL	AU-65H	AU-63H	AU-62H
NTSC	VEP86108C	VEP86076E	VEP86076E
PAL	VEP86108D	VEP86076F	VEP86076F

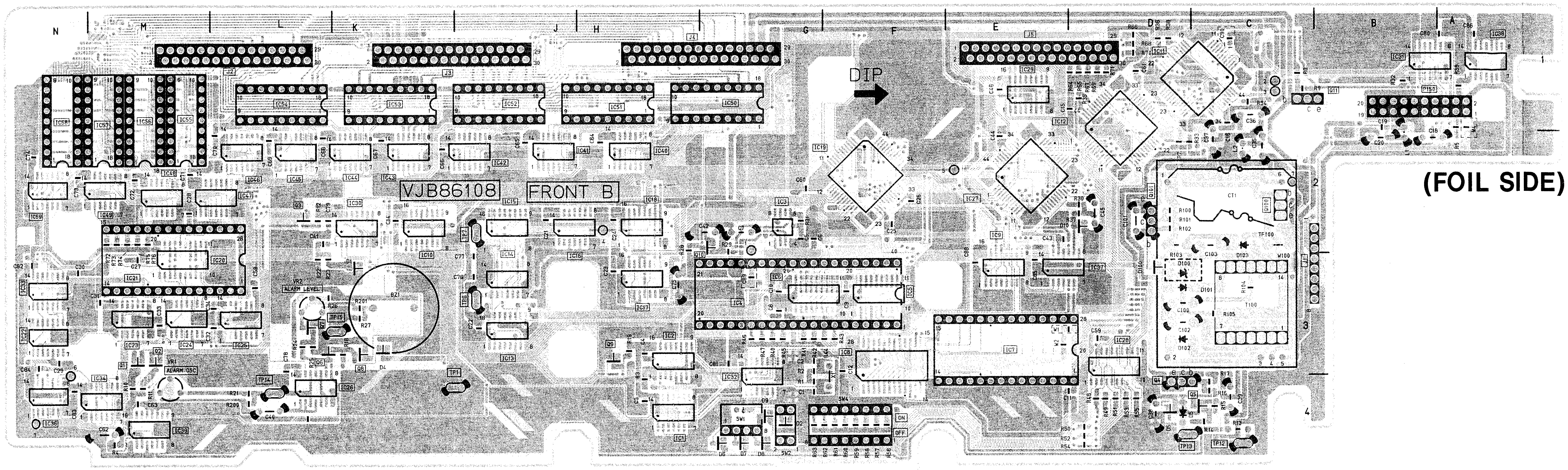
VJB86108
FRONT B
DIP
ALARM LEVEL
ALARM OSC
VR1
VR2
BZ1
CT1
TF100
T100
J2
J3
J4
J5
P150
SW1
SW2
SW4
ON
OFF
A
B
C
D
E
F
G
H
J
K
L
M
N

(FOIL SIDE)

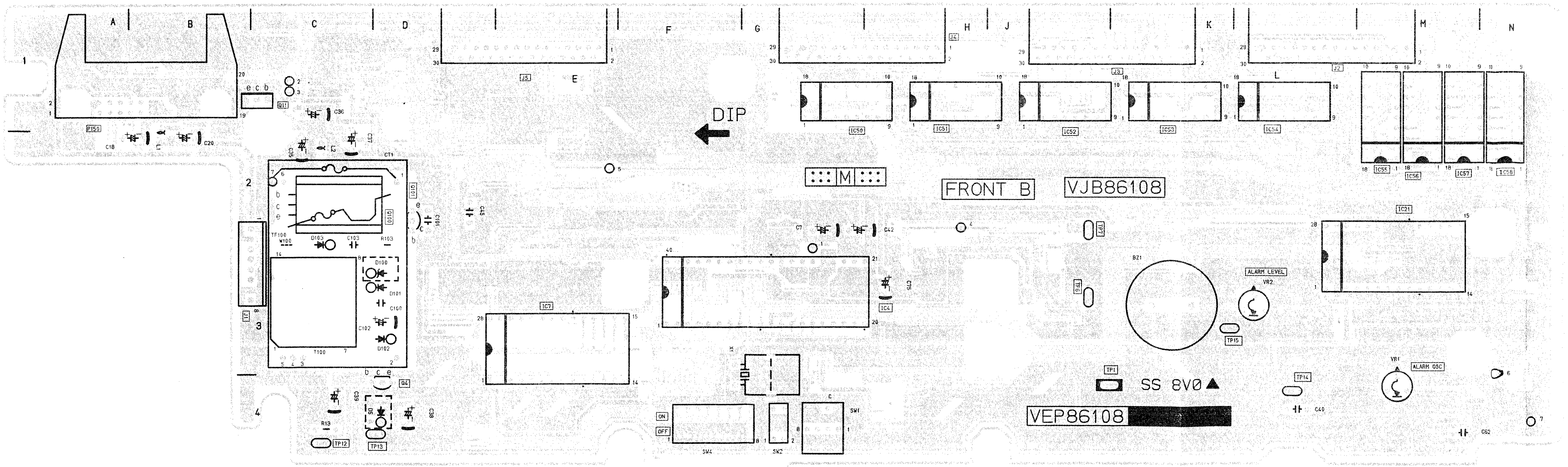
FRONT B
VJB86108
DIP
VEP86108
SS 8V0
ALARM LEVEL
ALARM OSC
VR1
VR2
BZ1
CT1
TF100
T100
IC4
IC7
IC21
IC50
IC51
IC52
IC53
IC54
IC55
IC56
IC57
IC58
TP1
TP12
TP13
TP14
TP15
SW1
SW2
SW4
ON
OFF
A
B
C
D
E
F
G
H
J
K
L
M
N

(COMPONENT SIDE)

5H	AU-63H	AU-62H
08C	VEP86076E	VEP86076E
08D	VEP86076F	VEP86076F

FRONT PANEL B P.
METER CHANGE SV
METER LAMP P.C.B

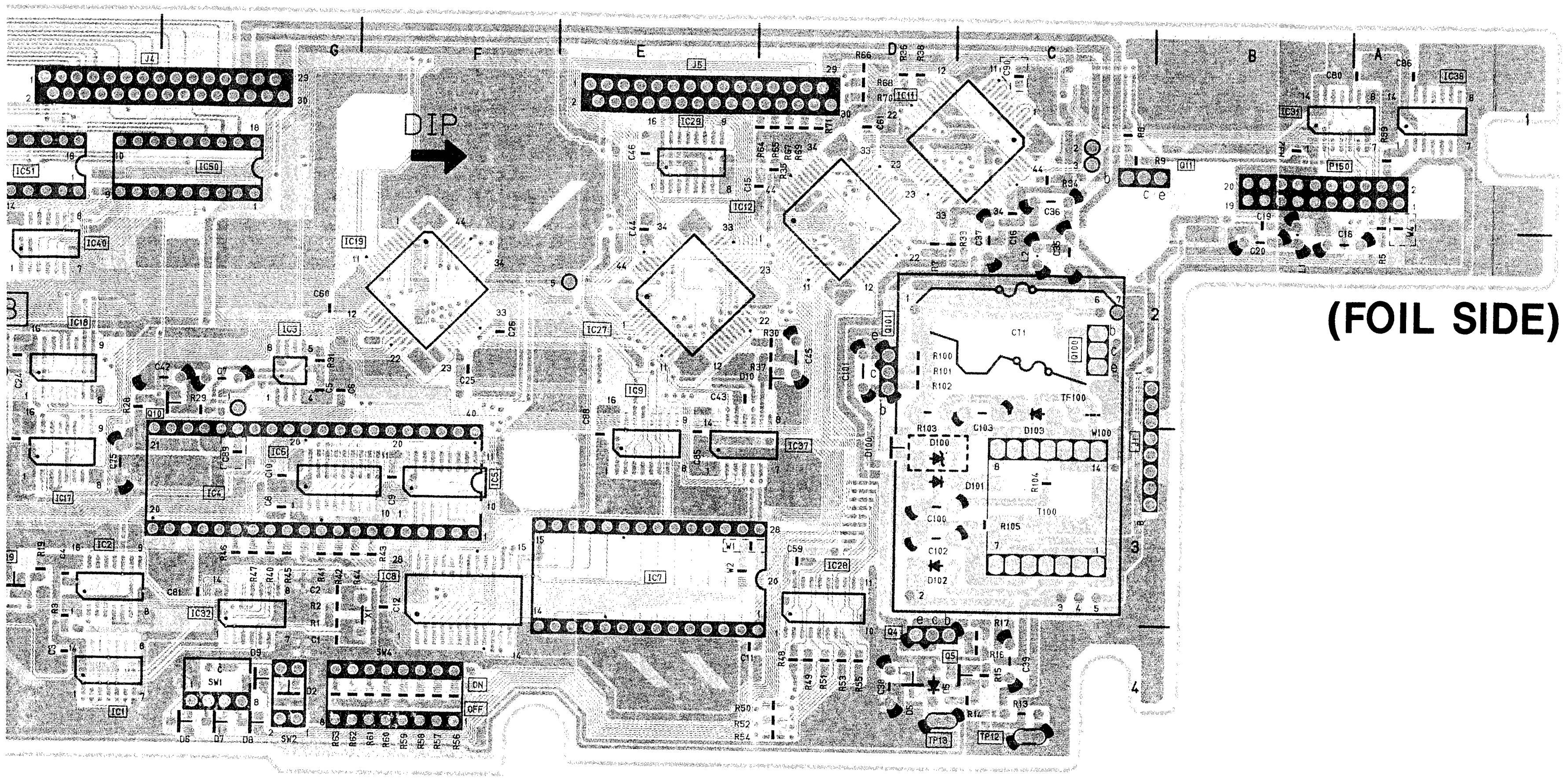
DIP
J4
J5
IC50
IC51
IC11
IC12
IC19
IC27
IC9
IC37
IC5
IC4
IC7
IC28
IC2
IC1
SW1
SW4
SW2
ON
OFF
TF100
T100
TP13
TP12

(FOIL SIDE)

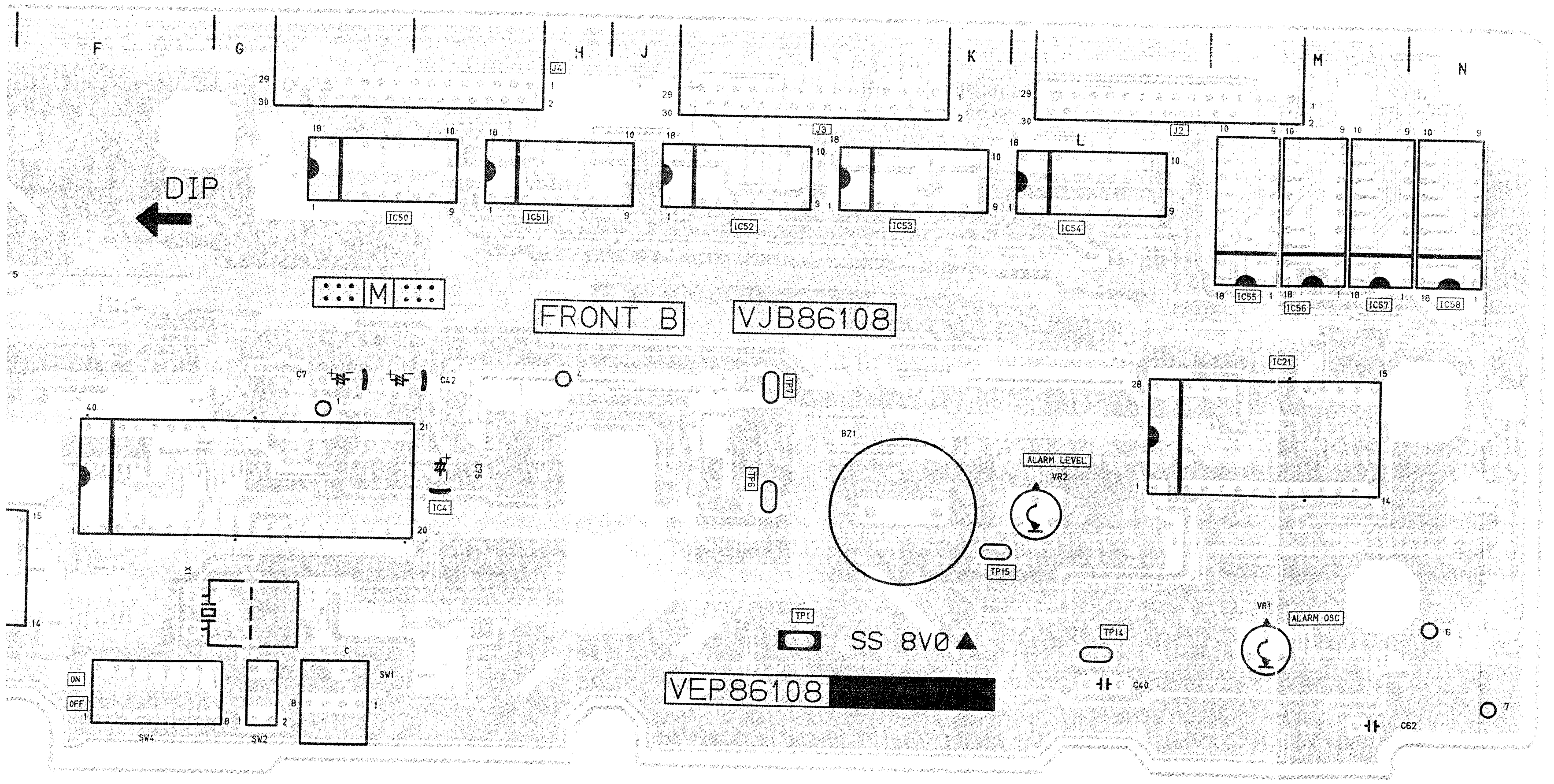
DIP
J4
J3
J2
IC50
IC51
IC52
IC53
IC54
IC55
IC56
IC57
IC58
M
FRONT B
VJB86108
IC21
IC4
BZ1
ALARM LEVEL
VR2
TP15
TP1
TP14
ALARM OSC
VR1
SS 8V0▲
VEP86108
ON
OFF
SW4
SW2
SW1

(COMPONENT SIDE)

MODEL / TYPE	AU-65H	AU-63H	AU-62H
NTSC	VEP80083B	———	———
PAL	VEP80083B	———	———

METER CHANGE SW P.C.BOARD

(FOIL SIDE)

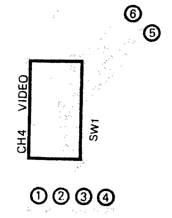
⑥
⑤
VIDEO
CH4
SW1
①②③④

MODEL / TYPE	AU-65H	AU-63H	AU-62H
NTSC	VEP80333C	VEP80333B	VEP80333B
PAL	VEP80333C	VEP80333B	VEP80333B

METER LAMP P.C.BOARD

(FOIL SIDE)

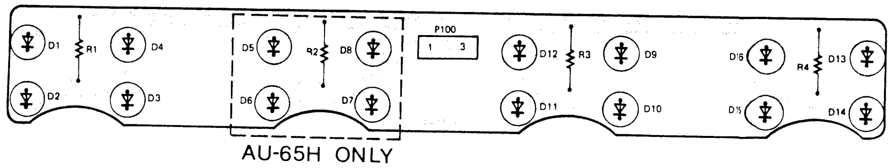
D1
R1
D4
D2
D3
D5
R2
D8
D6
D7
P100
1 3
D12
R3
D9
D11
D10
D15
R4
D13
D14
AU-65H ONLY

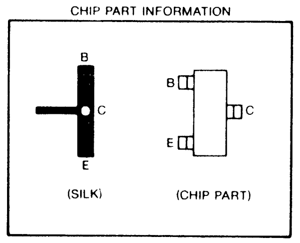
CHIP PART INFORMATION
B
C
E
(SILK)
B
C
E
(CHIP PART)

P.C. Board Location

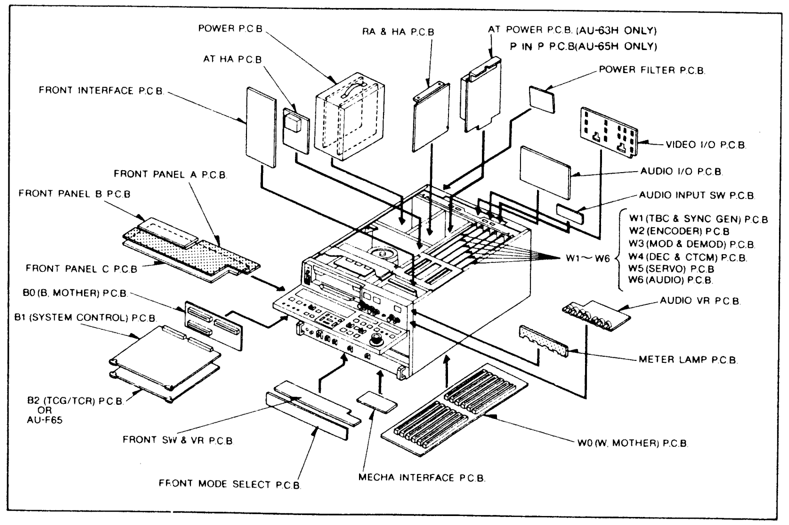
POWER P.C.B.
RA & HA P.C.B.
AT POWER P.C.B. (AU-63H ONLY)
P IN P P.C.B.(AU-65H ONLY)
AT HA P.C.B.
POWER FILTER P.C.B.
FRONT INTERFACE P.C.B.
VIDEO I/O P.C.B.
AUDIO I/O P.C.B.
FRONT PANEL A P.C.B.
FRONT PANEL B P.C.B.
AUDIO INPUT SW P.C.B.
W1 (TBC & SYNC GEN) P.C.B.
W2 (ENCODER) P.C.B.
W3 (MOD & DEMOD) P.C.B.
W4 (DEC & CTCM) P.C.B.
W5 (SERVO) P.C.B.
W6 (AUDIO) P.C.B.
W1～W6
FRONT PANEL C P.C.B.
B0 (B. MOTHER) P.C.B.
AUDIO VR P.C.B.
B1 (SYSTEM CONTROL) P.C.B.
METER LAMP P.C.B.
B2 (TCG/TCR) P.C.B. OR AU-F65
FRONT SW & VR P.C.B.
W0 (W. MOTHER) P.C.B.
FRONT MODE SELECT P.C.B.
MECHA INTERFACE P.C.B.

PARTS LISTS

● Electrical Parts Lists

● Exploded Views

● Mechanical Parts Lists

This section provides the exploded views, mechanical parts lists and electrical parts lists.

Note:

1. *Be sure to make your orders of replacement parts according to this list.
2. Unless ohterwise specified, all resistors are in OHMS, K = 1,000 OHMS, all capacitors are in MICROFARADS (uF), P = uuF.
3. The P.C.Board units marked with "■" show below the main assembled parts.
4. The parts marked with E on the exploded view show the electric parts.
5. IMPORTANT SAFETY NOTICE
   Components identified with the mark <!> have the special characteristics for safety. When replacing any of these components, use only the same type.

<< Abbreviations for parts >>

< NAME >		< DESCRIPTIONS >
C.CAPACITOR	:	CERAMIC CAPACITOR
C.CAPACITOR CH	:	CERAMIC CHIP CAPACITOR
E.CAPACITOR	:	ELECTROLYTIC CAPACITOR
G.CAPACITOR	:	GLASS CAPACITOR
M.CAPACITOR	:	MICA CAPACITOR
P.CAPACITOR	:	PLASTIC FILM CAPACITOR
S.CAPACITOR	:	SEMI-CONDUCTOR CAPACITOR
T.CAPACITOR	:	TANTALUM CAPACITOR
TRIMMER	:	TRIMMER
C.RESISTOR	:	CARBON RESISTOR
F.RESISTOR	:	FUSE RESISTOR
M.RESISTOR	:	METAL OXSIDE RESISTOR
M.RESISTOR CH	:	METAL OXSIDE CHIP RESISTOR
S.RESISTOR	:	SOLID RESISTOR
V.RESISTOR	:	VARIABLE RESISTOR
W.RESISTOR	:	WIRE WOUND RESISTOR
COMBI.TR-R	:	TRANSISTOR-RESISTOR COMBINATION PARTS
COMBI.R-R	:	RESISTOR-RESISTOR COMBINATION PARTS
COMBI.C-R	:	CAPACITOR-RESISTOR COMBINATION PARTS
COMBI.C-R-R	:	CAPACITOR-RESISTOR-COIL COMBINATION P
P.C.BOARD	:	PRINTED CIRCUIT BOARD
W/COMPONENT	:	WITH COMPONENT

CONTENTS

P.C.BOARDS LIST 1
W0 MOTHER1(AU-65H) 5
W0 MOTHER1(AU-63H) 5
W0 MOTHER1(AU-62H) 5
W1 TBC & SYNC GEN(AU-65H/63H/62H) 7
W1 TBC SUB 7
W2 ENCODER(AU-65H) 12
W2 SUB 12
W2 ENCODER(AU-63H) 20
W2 SUB 20
W2 ENCODER(AU-62H) 28
W2 SUB 28
W3 MOD & DEMOD(AU-65H) 36
W3 MOD & DEMOD(AU-63H) 44
W3 MOD & DEMOD(AU-62H) 50
W4 DEC & CTCM(AU-65H) 56
W5 SERVO(AU-65H/62H) 63
W5 SERVO(AU-63H) 68
W6 AUDIO(AU-65H) 75
W6 AUDIO(AU-63H/62H) 82
B0 MOTHER2(AU-65H) 86
B0 MOTHER2(AU-63H) 86
B0 MOTHER2(AU-62H) 86
B1 SYSTEM CONTROL(AU-65H) 86
B1 SYSTEM CONTROL(AU-63H) 90
B1 SYSTEM CONTROL(AU-62H) 93
B2 TCG/TCR(AU-65H/63H/62H) 96
AT POWER(AU-63H) 98
AUDIO INPUT SW(AU-65H) 98
AUDIO IN/OUT(AU-65H) 99
AUDIO IN/OUT SUB 99
AUDIO IN/OUT(AU-63H/62H) 101
AUDIO IN/OUT SUB 101
AUDIO VR(AU-65H) 102
AUDIO VR(AU-63H) 103
AUDIO VR(AU-62H) 104
AUTO OFF LED(AU-65H/63H/62H) 104
CASSETTE CARRIIAGE LAMP(AU-65H/63H/62H) 104
CASSETTE DETECT(AU-65H/63H/62H) 104
EJECT INTERFACE(AU-65H/63H/62H) 104
EJECT SW(AU-65H/63H/62H) 104
FRONT INTERFACE(AU-65H) 105
FRONT INTERFACE(AU-63H) 106
FRONT INTERFACE(AU-62H) 107
FRONT LOADING(AU-65H/63H/62H) 108
FRONT MODE SELECT(AU-65H) 108

FRONT MODE SELECT(AU-63H) 108
FRONT MODE SELECT(AU-62H) 109
FRONT PANEL A(AU-65H) 109
FRONT PANEL A(AU-63H/62H) 110
FRONT PANEL B(AU-65H) 112
FRONT PANEL B(AU-63H/62H) 113
FRONT SW VR(AU-65H/63H/62H) 114
HEADPHONE VR(AU-65H/63H/62H) 114
LOADING PHOTO (AU-65H/63H/62H) 115
MECHA INTERFACE CIRCUIT(AU-65H/63H/62H) 115
METER CHANGE SW(AU-65H) 116
METER LAMP(AU-65H) 116
METER LAMP(AU-63H/62H) 116
PICTURE IN PICTURE(AU-65H) 116
POWER FILTER (AU-65H/63H/62H) 119
POWER SUPPLY UNIT(AU-65H/63H/62H) 120
RA & HA(AU-65H) 121
PA & HA(AU-63H) 124
PA & HA(AU-62H) 125
TR SENSOR(1)(AU-65H/63H/62H) 126
TR SENSOR(2)(AU-65H/63H/62H) 126
UNLOADING PHOTO(AU-65H/63H/62H) 126
VIDEO IN/OUT(AU-65H) 126
VIDEO IN/OUT(AU-63H/AU-62H) 127
VIDEO VR(AU-65H) 128
YC IN/OUT(AU-65H/63H/62H) 129
9P REMOTE(AU-65H/63H/62H) 129

MECHANICAL REPLACEMENT PARTS LIST

CASING FRAME ASSEMBLY 131
MECHANICAL CHASSIS ASSEMBLY(1) 132
MECHANICAL CHASSIS ASSEMBLY(2) 134
MECHANICAL CHASSIS ASSEMBLY(3) 136
MECHANICAL CHASSIS ASSEMBLY(4) 138
FRONT PANEL ASSEMBLY(AU-65H) 140
FRONT PANEL ASSEMBLY(AU-63H/AU-62H) 142
REAR JACK PANEL ASSEMBLY 144
CHASSIS FRAME ASSEMBLY 146
CASSETTE COMPARTMENT ASSEMBLY 148
PACKING 150
SERVICING FIXTURES & TOOLS LIST 151

P.C.BOARDS LIST (TREE STYLE)

P.C.BOARD NAME	VEP NUMBER (AU-65H PAL)	VEP NUMBER (AU-63H PAL)	VEP NUMBER (AU-62H PAL)
1. W0 MOTHER 1	VEP80765A	VEP80765C	VEP80765B
2. W1 TBC & SYNCGEN	VEP88091C	VEP88091C	VEP88091C
3. W1 TBC SUB	VEP80681A	VEP80681A	VEP80681A
4. W2 ENCODER	VEP88063M	VEP88063N	VEP88063Q
5. W2 SUB	VEP80632A	VEP80632A	VEP80632A
6. W3 MOD & DEMOD	VEP83098E	VEP83098F	VEP83098G
7. W4 DEC & CTCM	VEP83173A	-----	-----
8. W5 SERVO	VEP82061E	VEP82061F	VEP82061E
9. W6 AUDIO	VEP84095K	VEP84095E	VEP84095E
10. B0 MOTHER 2	VEP80549H	VEP80549K	VEP80549J
11. B1 SYSTEM CONTROL	VEP86121D	VEP86121F	VEP86121E
12. B2 TCG/TCR	VEP86089C	VEP86089C	VEP86089C
13. AT H.A	-----	-----	-----
14. AT POWER	-----	VEP82062A	-----
15. AUDIO INPUT SW	VEP84103A	-----	-----
16. AUDIO IN/OUT	VEP84094G	VEP84094C	VEP84094C
17. AUDIO IN/OUT SUB	VEP80573A	VEP80573A	VEP80573A
18. AUDIO VR	VEP84102A	VEP84101C	VEP84101B
19. AUTO OFF LED	VEP00E08C	VEP00E08C	VEP00E08C
20. CASSETTE CARRIAGE LAMP	VEP00E72A	VEP00E72A	VEP00E72A
21. CASSETTE DETECT	VEP00E30A	VEP00E30A	VEP00E30A
22. EJECT INTERFACE	VEP80422B	VEP80422B	VEP80422B
23. EJECT SW	VEP80232A	VEP80232A	VEP80232A
24. FRONT INTERFACE	VEP80631D	VEP80631B	VEP80631C
25. FRONT LOADING	VEP80440A	VEP80440A	VEP80440A
26. FRONT MODE SELECT	VEP80559A	VEP80559D	VEP80559C
27. FRONT PANEL A	VEP86107B	VEP86086A	VEP86086A
28. FRONT PANEL B	VEP86108D	VEP86076F	VEP86076F
29. FRONT PANEL C	-----	-----	-----
30. FRONT SW VR	VEP80552A	VEP80552A	VEP80552A
31. HEADPHONE VR	VEP80616A	VEP80616A	VEP80616A
32. LOADING PHOTO	VEP00E04B	VEP00E04B	VEP00E04B
33. MECHA INTERFACE CIRCUIT	VEP80550B	VEP80550B	VEP80550B
34. METER CHANGE SW	VEP80083B	-----	-----
35. METER LAMP	VEP80333C	VEP80333B	VEP80333B
36. PICTURE IN PICTURE	VEP83170B	-----	-----
37. POWER FILTER	VEP81058A	VEP81058A	VEP81058A
38. POWER SUPPLY UNIT	VYK3637	VYK3637	VYK3637
39. RA & HA	VEP85015D	VEP85015F	VEP85015E
40. TR SENSOR (1)	VEP00E27C	VEP00E27C	VEP00E27C
41. TR SENSOR (2)	VEP00E28C	VEP00E28C	VEP00E28C
42. UNLOADING PHOTO	VEP00E25C	VEP00E25C	VEP00E25C
43. VIDEO/CH4 METER SW	-----	-----	-----
44. VIDEO IN/OUT	VEP83174C	VEP83174B	VEP83174B
45. VIDEO VR	VEP80621A	-----	-----
46. YC IN/OUT	VEP80574A	VEP80574A	VEP80574A
47. 9P REMOTE	VEP80551A	VEP80551A	VEP80551A
48. 50P REMOTE	-----	-----	-----

P.C.BOARDS LIST (TREE STYLE)

P.C.BOARD NAME	VEP NUMBER (AU-65 PAL)	VEP NUMBER (AU-63 PAL)	VEP NUMBER (AU-62 PAL)
1. W0 MOTHER 1	VEP80548A	VEP80548D	VEP80548C
2. W1 TBC & SYNCGEN	VEP88062C	VEP88062C	VEP88062C
3. W1 TBC SUB	-----	-----	-----
4. W2 ENCODER	VEP88063C	VEP88063C	VEP88063C
5. W2 SUB	VEP80632A	VEP80632A	VEP80632A
6. W3 MOD & DEMOD	VEP83098E	VEP83098F	VEP83098G
7. W4 DEC & CTCM	VEP83099B	-----	-----
8. W5 SERVO	VEP82061E	VEP82061F	VEP82061E
9. W6 AUDIO	VEP84095D	VEP84095E	VEP84095E
10. B0 MOTHER 2	VEP80549A	VEP80549B	VEP80549A
11. B1 SYSTEM CONTROL	VEP86088E	VEP86088F	VEP86088M
12. B2 TCG/TCR	-----	-----	-----
13. AT H.A	-----	-----	-----
14. AT POWER	-----	VEP82062A	-----
15. AUDIO INPUT SW	-----	-----	-----
16. AUDIO IN/OUT	VEP84094A	VEP84094C	VEP84094C
17. AUDIO IN/OUT SUB	VEP80573A	VEP80573A	VEP80573A
18. AUDIO VR	VEP84101A	VEP84101C	VEP84101B
19. AUTO OFF LED	VEP00E08C	VEP00E08C	VEP00E08C
20. CASSETTE CARRIAGE LAMP	VEP00E72A	VEP00E72A	VEP00E72A
21. CASSETTE DETECT	VEP00E30A	VEP00E30A	VEP00E30A
22. EJECT INTERFACE	VEP80422B	VEP80422B	VEP80422B
23. EJECT SW	VEP80232A	VEP80232A	VEP80232A
24. FRONT INTERFACE	VEP80631A	VEP80631B	VEP80631C
25. FRONT LOADING	VEP80440A	VEP80440A	VEP80440A
26. FRONT MODE SELECT	VEP80559A	VEP80559D	VEP80559C
27. FRONT PANEL A	VEP86050D	VEP86086A	VEP86086A
28. FRONT PANEL B	VEP66022A	VEP86076D	VEP86076D
29. FRONT PANEL C	VEP86048G	-----	-----
30. FRONT SW VR	VEP80552A	VEP80552A	VEP80552A
31. HEADPHONE VR	VEP80616A	VEP80616A	VEP80616A
32. LOADING PHOTO	VEP00E04B	VEP00E04B	VEP00E04B
33. MECHA INTERFACE CIRCUIT	VEP80550A	VEP80550A	VEP80550A
34. METER CHANGE SW	-----	-----	-----
35. METER LAMP	VEP80333B	VEP80333B	VEP80333B
36. PICTURE IN PICTURE	-----	-----	-----
37. POWER FILTER	VEP81058A	VEP81058A	VEP81058A
38. POWER SUPPLY UNIT	VYK3637	VYK3637	VYK3637
39. RA & HA	VEP85015D	VEP85015F	VEP85015E
40. TR SENSOR (1)	VEP00E27C	VEP00E27C	VEP00E27C
41. TR SENSOR (2)	VEP00E28C	VEP00E28C	VEP00E28C
42. UNLOADING PHOTO	VEP00E25C	VEP00E25C	VEP00E25C
43. VIDEO/CH4 METER SW	-----	-----	-----
44. VIDEO IN/OUT	VEP83097C	VEP83097B	VEP83097B
45. VIDEO VR	-----	-----	-----
46. YC IN/OUT	VEP80574A	VEP80574A	VEP80574A
47. 9P REMOTE	VEP80551A	VEP80551A	VEP80551A
48. 50P REMOTE	-----	-----	-----

ELECTRICAL REPLACEMENT PARTS LIST

Ref.No.		Part No.	Part Name & Description	Pcs	Remarks
		VEP80765A	P.C.BOARD W/COMPONENT	1	FOR AU-65H
			WO MOTHER 1		
		VEP80765C	P.C.BOARD W/COMPONENT	1	FOR AU-63H
			WO MOTHER 1		
		VEP80765B	P.C.BOARD W/COMPONENT	1	FOR AU-62H
			WO MOTHER 1		
		VEP88091C	P.C.BOARD W/COMPONENT	1	FOR AU-65H,AU-63H
			W1 TBC & SYNVGEN		AU-62H
		VEP80681A	P.C.BOARD W/COMPONENT	1	ON VEP88091C
			W1 TBC SUB		
		VEP88063M	P.C.BOARD W/COMPONENT	1	FOR AU-65H
			W2 ENCODER		
		VEP80632A	P.C.BOARD W/COMPONENT	1	ON VEP88063M
			W2 SUB		
		VEP88063N	P.C.BOARD W/COMPONENT	1	FOR AU-63H
			W2 ENCODER		
		VEP80632A	P.C.BOARD W/COMPONENT	1	ON VEP88063N
			W2 SUB		
		VEP88063Q	P.C.BOARD W/COMPONENT	1	FOR AU-62H
			W2 ENCODER		
		VEP80632A	P.C.BOARD W/COMPONENT	1	ON VEP88063Q
			W2 SUB		
		VEP83098E	P.C.BOARD W/COMPONENT	1	FOR AU-65H
			W3 MOD & DEMOD		
		VEP83098F	P.C.BOARD W/COMPONENT	1	FOR AU-63H
			W3 MOD & DEMOD		
		VEP83098G	P.C.BOARD W/COMPONENT	1	FOR AU-62H
			W3 MOD & DEMOD		
		VEP83173A	P.C.BOARD W/COMPONENT	1	FOR AU-65H
			W4 DEC & CTCM		
		VEP82061E	P.C.BOARD W/COMPONENT	1	FOR AU-65H,AU-62H
			W5 SERVO		
		VEP82061F	P.C.BOARD W/COMPONENT	1	FOR AU-63H
			W5 SERVO		
		VEP84095K	P.C.BOARD W/COMPONENT	1	FOR AU-65H
			W6 AUDIO		
		VEP84095E	P.C.BOARD W/COMPONENT	1	FOR AU-63H,AU-62H
			W6 AUDIO		
		VEP80549H	P.C.BOARD W/COMPONENT	1	FOR AU-65H
			BO MOTHER 2		
		VEP80549K	P.C.BOARD W/COMPONENT	1	FOR AU-63H
			BO MOTHER 2		
		VEP80549J	P.C.BOARD W/COMPONENT	1	FOR AU-62H
			BO MOTHER 2		
		VEP86121D	P.C.BOARD W/COMPONENT	1	FOR AU-65H
			B1 SYSTEM CONTROL		
		VEP86121F	P.C.BOARD W/COMPONENT	1	FOR AU-63H
			B1 SYSTEM CONTROL		
		VEP86121E	P.C.BOARD W/COMPONENT	1	FOR AU-62H
			B1 SYSTEM CONTROL		
		VEP86089C	P.C.BOARD W/COMPONENT	1	FOR AU-65H,AU-63H
			B2 TCG/TCR		AU-62H
		VEP82062A	P.C.BOARD W/COMPONENT	1	FOR AU-63H
			AT POWER		
		VEP84103A	P.C.BOARD W/COMPONENT	1	FOR AU-65H
			AUDIO INPUT SW		
		VEP84094G	P.C.BOARD W/COMPONENT	1	FOR AU-65H
			AUDIO IN/OUT		
		VEP80573A	P.C.BOARD W/COMPONENT	1	ON VEP84094G
			AUDIO IN/OUT SUB		
		VEP84094C	P.C.BOARD W/COMPONENT	1	FOR AU-63H,AU-62H
			AUDIO IN/OUT		
		VEP80573A	P.C.BOARD W/COMPONENT	1	ON VEP84094C
			AUDIO IN/OUT		

Ref.No.		Part No.	Part Name & Description	Pcs	Remarks
		VEP84102A	P.C.BOARD W/COMPONENT	1	FOR AU-65H
			AUDIO VR		
		VEP84101C	P.C.BOARD W/COMPONENT	1	FOR AU-63H
			AUDIO VR		
		VEP84101B	P.C.BOARD W/COMPONENT	1	FOR AU-62H
			AUDIO VR		
		VEP00E08C	P.C.BOARD W/COMPONENT	1	FOR AU-65H,AU-63H
			AUTO OFF LED		AU-62H
		VEP00E72A	P.C.BOARD W/COMPONENT	1	FOR AU-65H,AU-63H
			CASSETTE CARRIAGE LAMP		AU-62H
		VEP00E30A	P.C.BOARD W/COMPONENT	1	FOR AU-65H,AU-63H
			CASSETTE DETECT		AU-62H
		VEP80422B	P.C.BOARD W/COMPONENT	1	FOR AU-65H,AU-63H
			EJECT INTERFACE		AU-62H
		VEP80232A	P.C.BOARD W/COMPONENT	1	FOR AU-65H,AU-63H
			EJECT SW		AU-62H
		VEP80631D	P.C.BOARD W/COMPONENT	1	FOR AU-65H
			FRONT INTERFACE		
		VEP80631B	P.C.BOARD W/COMPONENT	1	FOR AU-63H
			FRONT INTERFACE		
		VEP80631C	P.C.BOARD W/COMPONENT	1	FOR AU-62H
			FRONT INTERFACE		
		VEP80440A	P.C.BOARD W/COMPONENT	1	FOR AU-65H,AU-63H
			FRONT LOACINT		AU-62H
		VEP80559A	P.C.BOARD W/COMPONENT	1	FOR AU-65H
			FRONT MODE SELECT		
		VEP80559D	P.C.BOARD W/COMPONENT	1	FOR AU-63H
			FRONT MODE SELECT		
		VEP80559C	P.C.BOARD W/COMPONENT	1	FOR AU-62H
			FRONT MODE SELECT		
		VEP86107B	P.C.BOARD W/COMPONENT	1	FOR AU-65H
			FRONT PANEL A		
		VEP86086A	P.C.BOARD W/COMPONENT	1	FOR AU-63H,AU-62H
			FRONT PANEL A		
		VEP86108D	P.C.BOARD W/COMPONENT	1	FOR AU-65H
			FRONT PANEL B		
		VEP86076F	P.C.BOARD W/COMPONENT	1	FOR AU-63H,AU-62H
			FRONT PANEL B		
		VEP80552A	P.C.BOARD W/COMPONENT	1	FOR AU-65H,AU-63H
			FRONT SW VR		AU-62H
		VEP80616A	P.C.BOARD W/COMPONENT	1	FOR AU-65H,AU-63H
			HEADPHONE VR		AU-62H
		VEP00E04B	P.C.BOARD W/COMPONENT	1	FOR AU-65H,AU-63H
			LOADING PHOTO		AU-62H
		VEP80550B	P.C.BOARD W/COMPONENT	1	FOR AU-65H,AU-63H
			MECHA INTERFACE CIRCUIT		AU-62H
		VEP80083B	P.C.BOARD W/COMPONENT	1	FOR AU-65H
			METER CHANGE SW		
		VEP80333C	P.C.BOARD W/COMPONENT	1	FOR AU-65H
			METER LAMP		
		VEP80333B	P.C.BOARD W/COMPONENT	1	FOR AU-63H,AU-62H
			METER LAMP		
		VEP83170B	P.C.BOARD W/COMPONENT	1	FOR AU-65H
			PICTURE IN PICTURE		
		VEP81058A	P.C.BOARD W/COMPONENT	1	FOR AU-65H,AU-63H
			POWER FILTER		AU-62H

Ref.No.		Part No.	Part Name & Description	Pcs	Remarks
		VYK3637	P.C.BOARD W/COMPONENT	1	FOR AU-65H,AU-63H
			POWER SUPPLY UNIT		AU-62H
		VEP85015D	P.C.BOARD W/COMPONENT	1	FOR AU-65H
			RA & HA		
		VEP85015F	P.C.BOARD W/COMPONENT	1	FOR AU-63H
			RA & HA		
		VEP85015E	P.C.BOARD W/COMPONENT	1	FOR AU-62H
			RA & HA		
		VEP00E27C	P.C.BOARD W/COMPONENT	1	FOR AU-65H,AU-63H
			TR SENSOR (1)		AU-62H
		VEP00E28C	P.C.BOARD W/COMPONENT	1	FOR AU-65H,AU-63H
			TR SENSOR (2)		AU-62H
		VEP00E25C	P.C.BOARD W/COMPONENT	1	FOR AU-65H,AU-63H
			UNLOADING PHOTO		AU-62H
		VEP83174C	P.C.BOARD W/COMPONENT	1	FOR AU-65H
			VIDEO IN/OUT		
		VEP83174B	P.C.BOARD W/COMPONENT	1	FOR AU-63H,AU-62H
			VIDEO IN/OUT		
		VEP80621A	P.C.BOARD W/COMPONENT	1	FOR AU-65H
			VIDEO VR		
		VEP80574A	P.C.BOARD W/COMPONENT	1	FOR AU-65H,AU-63H
			YC IN/OUT		AU-62H
		VEP80551A	P.C.BOARD W/COMPONENT	1	FOR AU-65H,AU-63H
			9P REMOTE		AU-62H

Ref.No.		Part No.	Part Name & Description	Pcs	Remarks
	■	VEP80765A	P.C.BOARD W/COMPONENT		FOR AU-65H
			WO MOTHER 1		
			CAPACITORS		
C1,C2		ECEA1CU221	E.CAPACITOR 16V 220U	2	
CN8		VJP1229T	CONNECTOR(MALE) 2P	1	
CN9		VJP1230T	CONNECTOR(MALE) 3P	1	
CN12-14		VJP3079	CONNECTOR (MALE)	3	
CN15		VJP3083	CONNECTOR (MALE)	1	
CN17		VJP1235T	CONNECTOR(MALE) 8P	1	
CN20		VJP2893A064	CONNECTOR(MALE)	1	
CN21		VJP1233T	CONNECTOR(MALE) 6P	1	
CN22,23		VJP1232T	CONNECTOR(MALE) 5P	2	
CN24		VJP3082	CONNECTOR (MALE)	1	
CN25		VJP3078	CONNECTOR (MALE)	1	
CN26		VJP3082	CONNECTOR (MALE)	1	
CN28		VJP1231T	CONNECTOR(MALE) 4P	1	
CN30,31		VJP3083	CONNECTOR (MALE)	2	
CN36		VJP3080	CONNECTOR (MALE)	1	
CN39		VJP3080	CONNECTOR (MALE)	1	
CN40		VJP3094	CONNECTOR (MALE)	1	
CN41,42		VJP3083	CONNECTOR (MALE)	2	
CN46		VJP3092	CONNECTOR (MALE)	1	
CN48		VJP3078	CONNECTOR (MALE)	1	
CN320		VJP3079	CONNECTOR (MALE)	1	
CN321		VJP3081	CONNECTOR	1	
CN600		VJP1230T	CONNECTOR(MALE) 3P	1	
POWER1		VJP1709	CONNECTOR(MALE)	1	
POWER2		VJP1627	CONNECTOR(MALE)	1	
			MISCELLANEOUS		
		VJF0004	CLAMPER	1	
		VMP2617	P.C.B. HOLDER ANGLE	1	
		VMP2618	P.C.B. HOLDER ANGLE	1	
		VMP2619	P.C.B. HOLDER ANGLE	1	
		XNG26E	NUT	8	
		XTV26+10F	SCREW	24	
		XWA26B	WASHER	8	
		XWG26	WASHER	8	
	■	VEP80765C	P.C.BOARD W/COMPONENT		FOR AU-63H
			WO MOTHER 1		
			CAPACITORS		
C1,C2		ECEA1CU221	E.CAPACITOR 16V 220U	2	
CN8		VJP1229T	CONNECTOR (MALE) 2P	1	
CN12-14		VJP3079	CONNECTOR (MALE)	3	
CN15		VJP3083	CONNECTOR (MALE)	1	
CN17		VJP1235T	CONNECTOR (MALE) 8P	1	
CN20		VJP2893A064	CONNECTOR (MALE)	1	
CN21		VJP1233T	CONNECTOR (MALE) 6P	1	
CN22,23		VJP1232T	CONNECTOR (MALE) 5P	2	
CN24		VJP3082	CONNECTOR (MALE)	1	
CN25		VJP3078	CONNECTOR (MALE)	1	
CN26		VJP3082	CONNECTOR (MALE)	1	
CN28		VJP1231T	CONNECTOR (MALE) 4P	1	
CN30,31		VJP3083	CONNECTOR (MALE)	2	
CN36		VJP3080	CONNECTOR (MALE)	1	
CN39		VJP3080	CONNECTOR (MALE)	1	
CN40		VJP3094	CONNECTOR (MALE)	1	
CN41,42		VJP3083	CONNECTOR (MALE)	2	
CN46		VJP3092	CONNECTOR (MALE)	1	
CN48		VJP3078	CONNECTOR (MALE)	1	
CN320		VJP3079	CONNECTOR (MALE)	1	
CN321		VJP3081	CONNECTOR (MALE)	1	
CN600		VJP1230T	CONNECTOR (MALE) 3P	1	
POWER1		VJP1709	CONNECTOR(MALE)	1	
POWER2		VJP1627	CONNECTOR (MALE)	1	
			MISCELLANEOUS		
		VJF0304	CLAMPER	4	
		VJF0004	CLAMPER	1	
		VMP2617	P.C.B. HOLDER ANGLE	1	
		VMP2618	P.C.B. HOLDER ANGLE	1	
		VMP2619	P.C.B. HOLDER ANGLE	1	
		XNG26E	NUT	8	
		XTV26+10F	SCREW	20	
		XWA26B	WASHER	8	
		XWG26	WASHER	8	
	■	VEP80765B	P.C.BOARD W/COMPONENT		FOR AU-62H
			WO MOTHER 1		
			CAPACITORS		
C1,C2		ECEA1CU221	E.CAPACITOR 16V 220U	2	
CN8		VJP1229T	CONNECTOR (MALE) 2P	1	
CN12-14		VJP3079	CONNECTOR (MALE)	3	
CN15		VJP3083	CONNECTOR (MALE)	1	
CN17		VJP1235T	CONNECTOR (MALE) 8P	1	
CN20		VJP2893A064	CONNECTOR (MALE)	1	
CN21		VJP1233T	CONNECTOR (MALE) 6P	1	
CN22,23		VJP1232T	CONNECTOR (MALE) 5P	2	
CN24		VJP3082	CONNECTOR (MALE)	1	
CN25		VJP3078	CONNECTOR (MALE)	1	
CN26		VJP3082	CONNECTOR (MALE)	1	
CN28		VJP1231T	CONNECTOR (MALE) 4P	1	
CN30,31		VJP3083	CONNECTOR (MALE)	2	
CN36		VJP3080	CONNECTOR (MALE)	1	
CN39		VJP3080	CONNECTOR (MALE)	1	
CN40		VJP3094	CONNECTOR (MALE)	1	
CN41,42		VJP3083	CONNECTOR (MALE)	2	
CN46		VJP3092	CONNECTOR (MALE)	1	
CN48		VJP3078	CONNECTOR (MALE)	1	
CN320		VJP3079	CONNECTOR (MALE)	1	
CN321		VJP3081	CONNECTOR (MALE)	1	
CN600		VJP1230T	CONNECTOR (MALE) 3P	1	

Ref.No.		Part No.	Part Name & Description	Pcs	Remarks
POWER1		VJP1709	CONNECTOR(MALE)	1	
POWER2		VJP1627	CONNECTOR(MALE)	1	
			MISCELLANEOUS		
		VJF0004	CLAMPER	1	
		VJF0304	CLAMPER	1	
		VMP2617	P.C.B. HLDER ANGLE	1	
		VMP2618	P.C.B. HLDER ANGLE	1	
		VMP2619	P.C.B. HLDER ANGLE	1	
		XNG26E	NUT	8	
		XTV26+10F	SCREW	24	
		XWA26B	WASHER	8	
		XWG26	WASHER	8	

Ref.No.		Part No.	Part Name & Description	Pcs	Remarks
	■	VEP88091C	P.C.BOARD W/COMPONENT		FOR AU-65H,AU-63H
			W1 TBC & SYNCGEN		AU-62H
	■	VEP80681A	P.C.BOARD W/COMPONENT		ON VEP88091C
			W1 TBC SUB		
			CAPACITORS		
C1		ECUM1E104ZFN	C.CAPACITOR CH 25V 0.1U	1	
C1		ECUM1E104ZFN	C.CAPACITOR CH 25V 0.1U	1	
C2		ECEA0JU101	E.CAPACITOR 6.3V 100U	1	
C2,C3		ECUM1E104ZFN	C.CAPACITOR CH 25V 0.1U	2	
C3		ECUM1E104ZFN	C.CAPACITOR CH 25V 0.1U	1	
C4		ECEA0JU101	E.CAPACITOR 6.3V 100U	1	
C4,C5		ECUM1E104ZFN	C.CAPACITOR CH 25V 0.1U	2	
C5		ECUM1E104ZFN	C.CAPACITOR CH 25V 0.1U	1	
C6		ECEA1CU101	E.CAPACITOR 16V 100U	1	
C6,C7		ECUM1E104ZFN	C.CAPACITOR CH 25V 0.1U	2	
C7		ECUM1E104ZFN	C.CAPACITOR CH 25V 0.1U	1	
C8		ECEA1CU101	E.CAPACITOR 16V 100U	1	
C8,C9		ECUM1E104ZFN	C.CAPACITOR CH 25V 0.1U	2	
C9		ECUM1H102JCN	C.CAPACITOR CH 50V 1000P	1	
C10		ECEA1AU101	E.CAPACITOR 10V 100U	1	
C10		ECUM1H123KBN	C.CAPACITOR CH 50V 0.012U	1	
C11		ECUM1E104ZFN	C.CAPACITOR CH 25V 0.1U	1	
C11		ECUM1H103KBN	C.CAPACITOR CH 50V 0.01U	1	
C12		ECEA1CU101	E.CAPACITOR 16V 100U	1	
C12		ECUM1H103KBN	C.CAPACITOR CH 50V 0.01U	1	
C13		ECUM1E104ZFN	C.CAPACITOR CH 25V 0.1U	1	
C13		ECUM1H102JCN	C.CAPACITOR CH 50V 1000P	1	
C14		ECEA1AU101	E.CAPACITOR 10V 100U	1	
C14		ECUM1H103KBN	C.CAPACITOR CH 50V 0.01U	1	
C15		ECUM1E104ZFN	C.CAPACITOR CH 25V 0.1U	1	
C15		ECUM1H103KBN	C.CAPACITOR CH 50V 0.01U	1	
C16		ECUM1E104ZFN	C.CAPACITOR CH 25V 0.1U	1	
C16		ECUM1H103KBN	C.CAPACITOR CH 50V 0.01U	1	
C17		ECUM1E104ZFN	C.CAPACITOR CH 25V 0.1U	1	
C17		ECUM1H103KBN	C.CAPACITOR CH 50V 0.01U	1	
C18		ECUM1E104ZFN	C.CAPACITOR CH 25V 0.1U	1	
C18		ECUM1H391JCN	C.CAPACITOR CH 50V 390P	1	
C19-22		ECUM1E104ZFN	C.CAPACITOR CH 25V 0.1U	4	
C23		ECEA1CU220	E.CAPACITOR 16V 22U	1	
C24		ECUM1E104ZFN	C.CAPACITOR CH 25V 0.1U	1	
C25		ECEA1HU2R2	E.CAPACITOR 50V 2.2U	1	
C26		ECEA1CU220	E.CAPACITOR 16V 22U	1	
C27		ECUM1E104ZFN	C.CAPACITOR CH 25V 0.1U	1	
C28		ECEA1CU220	E.CAPACITOR 16V 22U	1	
C29-33		ECUM1E104ZFN	C.CAPACITOR CH 25V 0.1U	5	
C34		ECEA1HU2R2	E.CAPACITOR 50V 2.2U	1	
C35		ECEA1CU220	E.CAPACITOR 16V 22U	1	
C36		ECUM1E104ZFN	C.CAPACITOR CH 25V 0.1U	1	
C37		ECEA1AU221	E.CAPACITOR 10V 220U	1	
C38		ECEA1HU2R2	E.CAPACITOR 50V 2.2U	1	
C39		ECUM1E104ZFN	C.CAPACITOR CH 25V 0.1U	1	
C40		ECEA0JU101	E.CAPACITOR 6.3V 100U	1	
C41		ECUM1E104ZFN	C.CAPACITOR CH 25V 0.1U	1	
C43		ECUM1H221JCN	C.CAPACITOR CH 50V 220P	1	
C44		ECUM1H151JCN	C.CAPACITOR CH 50V 150P	1	
C47,48		ECUM1E104ZFN	C.CAPACITOR CH 25V 0.1U	2	
C50-52		ECUM1E104ZFN	C.CAPACITOR CH 25V 0.1U	3	
C53		ECUM1H223KBN	C.CAPACITOR CH 50V 0.022U	1	
C54		ECEA0JKS100	E.CAPACITOR 6.3V 10U	1	
C55		ECEA0JKS220	E.CAPACITOR 6.3V 22U	1	
C57,58		ECUM1H101JCN	C.CAPACITOR CH 50V 100P	2	
C59,60		ECUM1E104ZFN	C.CAPACITOR CH 25V 0.1U	2	
C77,78		ECUM1E104ZFN	C.CAPACITOR CH 25V 0.1U	2	
C79		ECEA1CU220	E.CAPACITOR 16V 22U	1	
C81		ECQV1H474JZ	P.CAPACITOR 50V 0.47U	1	
C82-99		ECUM1H103KBN	C.CAPACITOR CH 50V 0.01U	18	
C100-02		ECUM1H103KBN	C.CAPACITOR CH 50V 0.01U	3	
C103		ECUM1H181JCN	C.CAPACITOR CH 50V 180P	1	
C110-21		ECUM1E104ZFN	C.CAPACITOR CH 25V 0.1U	12	

Ref.No.		Part No.	Part Name & Description	Pcs	Remarks
C201		ECEA1CU470	E.CAPACITOR 16V 47U	1	
C202,03		ECUM1H103KBN	C.CAPACITOR CH 50V 0.01U	2	
C204		ECUM1H181JCN	C.CAPACITOR CH 50V 180P	1	
C205		ECUM1H103KBN	C.CAPACITOR CH 50V 0.01U	1	
C206		ECUM1H180JCN	C.CAPACITOR CH 50V 18P	1	
C207		ECUM1H680JCN	C.CAPACITOR CH 50V 68P	1	
C208,09		ECUM1C104KBN	C.CAPACITOR CH 16V 0.1U	2	
C210		ECEA1HN010S	E.CAPACITOR 50V 1U	1	
C211		ECUM1E104ZFN	C.CAPACITOR CH 25V 0.1U	1	
C212		ECEA1CU470	E.CAPACITOR 16V 47U	1	
C213		ECUM1H330JCN	C.CAPACITOR CH 50V 33P	1	
C214		ECUM1H101JCN	C.CAPACITOR CH 50V 100P	1	
C215		ECUM1H181JCN	C.CAPACITOR CH 50V 180P	1	
C216		ECUM1H101JCN	C.CAPACITOR CH 50V 100P	1	
C217		ECUM1H220JCN	C.CAPACITOR CH 50V 22P	1	
C218		ECUM1H470JCN	C.CAPACITOR CH 50V 47P	1	
C219-22		ECUM1E104ZFN	C.CAPACITOR CH 25V 0.1U	4	
C225		ECUM1H820JCN	C.CAPACITOR CH 50V 82P	1	
C226		ECEA1CU100	E.CAPACITOR 16V 10U	1	
C227		ECEA1CU470	E.CAPACITOR 16V 47U	1	
C228		ECUM1E104ZFN	C.CAPACITOR CH 25V 0.1U	1	
C229		ECUM1H103KBN	C.CAPACITOR CH 50V 0.01U	1	
C230		ECUM1E104ZFN	C.CAPACITOR CH 25V 0.1U	1	
C231		ECEA1HN2R2S	E.CAPACITOR 50V 2.2U	1	
C232		ECUM1E104ZFN	C.CAPACITOR CH 25V 0.1U	1	
C233		ECUM1H270JCN	C.CAPACITOR CH 50V 27P	1	
C234		ECV1ZW20X53T	V.CAPACITOR 20P	1	
C235		ECUM1H102JCN	C.CAPACITOR CH 50V 1000P	1	
C236		ECUM1E104ZFN	C.CAPACITOR CH 25V 0.1U	1	
C237		ECEA1CU100	E.CAPACITOR 16V 10U	1	
C238		ECUM1H150JCN	C.CAPACITOR CH 50V 15P	1	
C239		ECUM1H220JCN	C.CAPACITOR CH 50V 22P	1	
C240		ECUM1H103KBN	C.CAPACITOR CH 50V 0.01U	1	
C241,42		ECUM1E104ZFN	C.CAPACITOR CH 25V 0.1U	2	
C243		ECUM1C104KBN	C.CAPACITOR CH 16V 0.1U	1	
C244-46		ECUM1E104ZFN	C.CAPACITOR CH 25V 0.1U	3	
C247		ECUM1H390JCN	C.CAPACITOR CH 50V 39P	1	
C248		ECUM1E104ZFN	C.CAPACITOR CH 25V 0.1U	1	
C250		ECEA1CU470	E.CAPACITOR 16V 47U	1	
C251		ECEA1AU470	E.CAPACITOR 10V 47U	1	
C252		ECUM1E104ZFN	C.CAPACITOR CH 25V 0.1U	1	
C253		ECEA1CU100	E.CAPACITOR 16V 10U	1	
C254,55		ECUM1E104ZFN	C.CAPACITOR CH 25V 0.1U	2	
C256		ECUM1H103KBN	C.CAPACITOR CH 50V 0.01U	1	
C257		ECUM1E104ZFN	C.CAPACITOR CH 25V 0.1U	1	
C258		ECEA1HN010S	E.CAPACITOR 50V 1U	1	
C259		ECUM1E104ZFN	C.CAPACITOR CH 25V 0.1U	1	
C260		ECEA1AU470	E.CAPACITOR 10V 47U	1	
C261		ECUM1E104ZFN	C.CAPACITOR CH 25V 0.1U	1	
C262		ECEA1AU470	E.CAPACITOR 10V 47U	1	
C263		ECUM1E104ZFN	C.CAPACITOR CH 25V 0.1U	1	
C264		ECEA1CN100S	E.CAPACITOR 16V 10U	1	
C265		ECUM1H102JCN	C.CAPACITOR CH 50V 1000P	1	
C266		ECUM1H150JCN	C.CAPACITOR CH 50V 15P	1	
C267,68		ECUM1E104ZFN	C.CAPACITOR CH 25V 0.1U	2	
C270		ECUM1H103KBN	C.CAPACITOR CH 50V 0.01U	1	
C271-73		ECUM1E104ZFN	C.CAPACITOR CH 25V 0.1U	3	
C275		ECUM1H102JCN	C.CAPACITOR CH 50V 1000P	1	
C276		ECUM1E104ZFN	C.CAPACITOR CH 25V 0.1U	1	
C277		ECEA1AU470	E.CAPACITOR 10V 47U	1	
C279		ECUM1H103KBN	C.CAPACITOR CH 50V 0.01U	1	
C280,81		ECUM1E104ZFN	C.CAPACITOR CH 25V 0.1U	2	
C282		ECUM1C104KBN	C.CAPACITOR CH 16V 0.1U	1	
C283		ECUM1H102JCN	C.CAPACITOR CH 50V 1000P	1	
C284-91		ECUM1E104ZFN	C.CAPACITOR CH 25V 0.1U	8	
C293-95		ECUM1H560JCN	C.CAPACITOR CH 50V 56P	3	
C296		ECEA1HNR47S	E.CAPACITOR 50V 0.47U	1	
C401		ECQM1H222JF	P.CAPACITOR 50V 2200P	1	
C402		ECQM1H223JF	P.CAPACITOR 50V 0.022U	1	
C403		ECQM1H222JF	P.CAPACITOR 50V 2200P	1	
C406		ECQM1H102JF	P.CAPACITOR 50V 1000P	1	
C407,08		ECUM1H221JCN	C.CAPACITOR CH 50V 220P	2	
C409		ECUM1E104ZFN	C.CAPACITOR CH 25V 0.1U	1	
C410,11		ECUM1H820JCN	C.CAPACITOR CH 50V 82P	2	
C412		ECUM1E104ZFN	C.CAPACITOR CH 25V 0.1U	1	

Ref.No.		Part No.	Part Name & Description	Pcs	Remarks
C413		ECUM1H820JCN	C.CAPACITOR CH 50V 82P	1	
C414-18		ECUM1E104ZFN	C.CAPACITOR CH 25V 0.1U	5	
C423		ECUM1H391JCN	C.CAPACITOR CH 50V 390P	1	
C424		ECUM1E104ZFN	C.CAPACITOR CH 25V 0.1U	1	
C425		ECQM1H102JF	P.CAPACITOR 50V 1000P	1	
C426		ECUM1H221JCN	C.CAPACITOR CH 50V 220P	1	
C427		ECQM1H102JF	P.CAPACITOR 50V 1000P	1	
C438		ECUM1H681JCN	C.CAPACITOR CH 50V 680P	1	
C441		ECQM1H102JF	P.CAPACITOR 50V 1000P	1	
C442		ECUM1H221JCN	C.CAPACITOR CH 50V 220P	1	
C443-46		ECUM1E104ZFN	C.CAPACITOR CH 25V 0.1U	4	
C450		ECQM1H392JF	P.CAPACITOR 50V 3900P	1	
C452		ECUM1H151JCN	C.CAPACITOR CH 50V 150P	1	
C453		ECQM1H223JF	P.CAPACITOR 50V 0.022U	1	
C454		ECQM1H122JF	P.CAPACITOR 50V 1200P	1	
C455		ECQM1H104JF	P.CAPACITOR 50V 0.1U	1	
C456		ECEA1CN100S	E.CAPACITOR 16V 10U	1	
C457		ECUM1H561JCN	C.CAPACITOR CH 50V 560P	1	
C458		ECUM1E104ZFN	C.CAPACITOR CH 25V 0.1U	1	
C459		ECEA1AU220	E.CAPACITOR 10V 22U	1	
C460,61		ECUM1H101JCN	C.CAPACITOR CH 50V 100P	2	
C462		ECUM1E104ZFN	C.CAPACITOR CH 25V 0.1U	1	
C463		ECEA1AU220	E.CAPACITOR 10V 22U	1	
C464		ECUM1H103KBN	C.CAPACITOR CH 50V 0.01U	1	
C465		ECUM1H560JCN	C.CAPACITOR CH 50V 56P	1	
C467		ECUM1E104ZFN	C.CAPACITOR CH 25V 0.1U	1	
C468		ECEA1AU220	E.CAPACITOR 10V 22U	1	
C469,70		ECUM1E104ZFN	C.CAPACITOR CH 25V 0.1U	2	
C471		ECUM1H151JCN	C.CAPACITOR CH 50V 150P	1	
C473		ECUM1E104ZFN	C.CAPACITOR CH 25V 0.1U	1	
C474		ECEA1AU101	E.CAPACITOR 10V 100U	1	
C475		ECUM1E104ZFN	C.CAPACITOR CH 25V 0.1U	1	
C476		ECEA1CU101	E.CAPACITOR 16V 100U	1	
C477		ECUM1E104ZFN	C.CAPACITOR CH 25V 0.1U	1	
C478		ECEA1CU101	E.CAPACITOR 16V 100U	1	
C479		ECQM1H103JF	P.CAPACITOR 50V 0.01U	1	
C480		ECUM1H470JCN	C.CAPACITOR CH 50V 47P	1	
C481		ECUM1H181JCN	C.CAPACITOR CH 50V 180P	1	
C482		ECQM1H122JF	P.CAPACITOR 50V 1200P	1	
C483		ECQM1H103JF	P.CAPACITOR 50V 0.01U	1	
C484		ECUM1E104ZFN	C.CAPACITOR CH 25V 0.1U	1	
C485		ECEA1AU220	E.CAPACITOR 10V 22U	1	
C486		ECUM1E104ZFN	C.CAPACITOR CH 25V 0.1U	1	
C487		ECEA1HUR47	E.CAPACITOR 50V 0.47U	1	
C488		ECEA1HN010S	E.CAPACITOR 50V 1U	1	
C489		ECEA1HU2R2	E.CAPACITOR 50V 2.2U	1	
C490		ECUM1H330JCN	C.CAPACITOR CH 50V 33P	1	
C491		ECQM1H223JF	P.CAPACITOR 50V 0.022U	1	
C504		ECUM1H470JCN	C.CAPACITOR CH 50V 47P	1	
C514		ECUM1E104ZFN	C.CAPACITOR CH 25V 0.1U	1	
C517		ECUM1H470JCN	C.CAPACITOR CH 50V 47P	1	
C518-20		ECUM1E104ZFN	C.CAPACITOR CH 25V 0.1U	3	
C521		ECEA1CU101	E.CAPACITOR 16V 100U	1	
C522		ECUM1E104ZFN	C.CAPACITOR CH 25V 0.1U	1	
C523		ECEA1CU101	E.CAPACITOR 16V 100U	1	
C524		ECUM1E104ZFN	C.CAPACITOR CH 25V 0.1U	1	
C525		ECEA1AU101	E.CAPACITOR 10V 100U	1	
C528		ECEA1AU220	E.CAPACITOR 10V 22U	1	
C529		ECUM1E104ZFN	C.CAPACITOR CH 25V 0.1U	1	
C551		ECUM1E104ZFN	C.CAPACITOR CH 25V 0.1U	1	
C600-09		ECUM1E104ZFN	C.CAPACITOR CH 25V 0.1U	10	
C614,15		ECUM1E104ZFN	C.CAPACITOR CH 25V 0.1U	2	
C620		ECUM1H102JCN	C.CAPACITOR CH 50V 1000P	1	
C621,22		ECUM1H221JCN	C.CAPACITOR CH 50V 220P	2	
C623,24		ECUM1H392KBN	C.CAPACITOR CH 50V 3900P	2	
C625-36		ECUM1E104ZFN	C.CAPACITOR CH 25V 0.1U	12	
C638,39		ECUM1H102JCN	C.CAPACITOR CH 50V 1000P	2	
C640		ECUM1E104ZFN	C.CAPACITOR CH 25V 0.1U	1	
C641		ECUM1H102JCN	C.CAPACITOR CH 50V 1000P	1	
C642		ECUM1H391JCN	C.CAPACITOR CH 50V 390P	1	
C643		ECUM1H101JCN	C.CAPACITOR CH 50V 100P	1	
C644		ECUM1H820JCN	C.CAPACITOR CH 50V 82P	1	
C645		ECUM1H680JCN	C.CAPACITOR CH 50V 68P	1	
C700		ECCF1H151JC	C.CAPACITOR 50V 150P	1	
C701		VCK0036104KR	C.CAPACITOR 50V 0.1U	1	

Ref.No.		Part No.	Part Name & Description	Pcs	Remarks
C702		VCK0036104KR	C.CAPACITOR 50V 0.1U	1	
C703		ECCF1H121JC	C.CAPACITOR 50V 120P	1	
C704		VCK0036104KR	C.CAPACITOR 50V 0.1U	1	
C705		ECCF1H121JC	C.CAPACITOR 50V 120P	1	
C706		VCK0036104KR	C.CAPACITOR 50V 0.1U	1	
C707		VCK0036104KR	C.CAPACITOR 50V 0.1U	1	
C708		VCK0036104KR	C.CAPACITOR 50V 0.1U	1	
C709		ECCF1H151JC	C.CAPACITOR 50V 150P	1	
C710		VCK0036104KR	C.CAPACITOR 50V 0.1U	1	
C711		ECCF1H820JC	C.CAPACITOR 50V 82P	1	
C712		ECCF1H121JC	C.CAPACITOR 50V 120P	1	
C713		VCK0036104KR	C.CAPACITOR 50V 0.1U	1	
C714		ECCF1H560JC	C.CAPACITOR 50V 56P	1	
C715		ECCF1H560JC	C.CAPACITOR 50V 56P	1	
CN1		VJP2983A020	CONNECTOR (MALE)	1	
CN1		VJS2983A020	CONNECTOR (FEMALE)	1	
CN2		VJP2983A010	CONNECTOR (MALE)	1	
CN2		VJS2983A010	CONNECTOR (FEMALE)	1	
CN3		VJP2983A010	CONNECTOR (MALE)	1	
CN3		VJS2983A010	CONNECTOR (FEMALE)	1	
CN4		VJP2983A010	CONNECTOR (MALE)	1	
CN4		VJS2983A010	CONNECTOR (FEMALE)	1	
CN5		VJP2983A020	CONNECTOR (MALE)	1	
CN5		VJS2983A020	CONNECTOR (FEMALE)	1	
CN6		VJP1247T	CONNECTOR(MALE) 7P	1	
D201		MA151WA	DIODE	1	
D202		MA335-R	DIODE	1	
D203		MA151K	DIODE	1	
D206-10		MA151K	DIODE	5	
D211		MA151WK	DIODE	1	
D212		MA151K	DIODE	1	
D402		MA151K	DIODE	1	
D404		MA153	DIODE	1	
D406		MA151K	DIODE	1	
D407		MA335-R	DIODE	1	
D408-10		MA151K	DIODE	3	
D416,17		MA151K	DIODE	2	
IC1		MC74HC74AF	IC	1	
IC1		SN74LS123NS	IC	1	
IC2		MC74HC08AF	IC	1	
IC2		MC74HC161F	IC	1	
IC3		MC74HC00AF	IC	1	
IC3		MC74HC00AF	IC	1	
IC4		MC74HC08AF	IC	1	
IC4		SN74ALS574A	IC	1	
IC5		MC74HC32AF	IC	1	
IC5		SN74ALS574A	IC	1	
IC6		MC74HC74AF	IC	1	
IC6,C7		MC74HC74AF	IC	2	
IC7		UPD65013F101	IC	1	
IC8		VSI1012	IC	1	
IC9		MC74HC574AF	IC	1	
IC9		UPD74HC123AG	IC	1	
IC10		MC74HC74AF	IC	1	
IC11		MC74HC00AF	IC	1	
IC11		MC74HC08AF	IC	1	
IC12		MM74HC221AM	IC	1	
IC12		SN74ALS574A	IC	1	
IC13		HM63021P	IC	1	
IC13		MC74HC32AF	IC	1	
IC14		MC74HC74AF	IC	1	
IC14		M74F374FP	IC	1	
IC15		MC74HC08AF	IC	1	
IC15,16		M74F157AF	IC	2	
IC17		UPD65012F475	IC	1	
IC18,19		MC74HC574AF	IC	2	

Ref.No.		Part No.	Part Name & Description	Pcs	Remarks
IC20,21		M74F04FP	IC	2	
IC22		MC74HC574AF	IC	1	
IC24		MB621492PF	IC	1	
IC25		MB620462PF	IC	1	
IC26,27		UPD42101G-3	IC	2	
IC28,29		MB81C1501PF	IC	2	
IC31,32		MB81C1501PF	IC	2	
IC33,34		MB606905UPF	IC	2	
IC35		HM63021P	IC	1	
IC36		MC74HC574AF	IC	1	
IC37		HM63021P	IC	1	
IC45		UPD65013FA44	IC	1	
IC46-48		MB40778PF	IC	3	
IC49		AN78L09	IC	1	
IC50		AN79L09	IC	1	
IC51		AN78N05	IC	1	
IC53		M74F109FP	IC	1	
IC54,55		RC082BM	IC	2	
IC57		RC082BM	IC	1	
IC58		MC74HC74AF	IC	1	
IC59		RC082BM	IC	1	
IC70		M74F04FP	IC	1	
IC71		M74F30FP	IC	1	
IC72		M74F244FP	IC	1	
IC73		VSI1194	IC	1	
IC74		VSI1011	IC	1	
IC75		VSI1009	IC	1	
IC76		VSI1010	IC	1	
IC77		M74F30FP	IC	1	
IC78		MC74HC74AF	IC	1	
IC79		M74F04FP	IC	1	
IC80		M74F74FP	IC	1	
IC81		MC74HC74AF	IC	1	
IC82,83		SN74LS161AS	IC	2	
IC201		AN91A12S	IC	1	
IC202		MN53015VZW	IC	1	
IC203		UPD65024F152	IC	1	
IC204		UPD65040F144	IC	1	
IC205		NE521D	IC	1	
IC206,07		MN74HC221S	IC	2	
IC208		MC74HC32AF	IC	1	
IC209		MC14053BF	IC	1	(R)
IC210		RC082BM	IC	1	
IC211		NE521D	IC	1	
IC212		MC74HC04AF	IC	1	
IC213		MC74HC125AF	IC	1	
IC214		MC74HC02AF	IC	1	
IC216,17		UPC4082G	IC	2	
IC218		DN74LS04NS	IC	1	
IC220		MC74HC74AF	IC	1	
IC221,22		RC082BM	IC	2	
IC223		MC74HC04AF	IC	1	
IC224		MC74HC08AF	IC	1	
IC225,26		MC74HC04AF	IC	2	
IC228		AN78L09	IC	1	
IC229		AN79L05	IC	1	
IC230		AN78L09	IC	1	
IC231-33		AN78L05	IC	3	
IC240		MC74HC08AF	IC	1	
IC401		MC74HC86F	IC	1	
IC402		SN74LS221NS	IC	1	
IC403		MC74HC00AF	IC	1	
IC404		MC74HC02AF	IC	1	
IC405		UPD65022B264	IC	1	
IC409		MC74HC00AF	IC	1	
IC410		SN75452BPS	IC	1	
IC411		UPC319G2	IC	1	
IC412		MC74HC04AF	IC	1	
IC413		SN74LS123NS	IC	1	
IC415		SN74LS123NS	IC	1	
IC416		UPD65022C252	IC	1	
IC418		SN74LS123NS	IC	1	
IC419		MC74HC4053F	IC	1	
IC420,21		RC082BM	IC	2	
IC422		AN79L05	IC	1	

Ref.No.		Part No.	Part Name & Description	Pcs	Remarks
IC423		AN78L05	IC	1	
IC424		MC1648P	IC	1	
IC425		MC10125L	IC	1	
IC426		M74F86FP	IC	1	
IC427,28		M74F109FP	IC	2	
IC429		SN74LS221NS	IC	1	
IC430		AN79L05	IC	1	
IC431		AN79L09	IC	1	
IC432		AN78L09	IC	1	
IC433		SN74LS123NS	IC	1	
IC434		SN74LS221NS	IC	1	
IC435		RC082BM	IC	1	
IC436		MC74HC4053F	IC	1	
IC437		AN78L05	IC	1	
IC438		UPC358G2	IC	1	
IC439		SN74LS624NS	IC	1	
IC441		MC74HC74AF	IC	1	
IC442		MC74HC125AF	IC	1	
IC443		MC74HC00AF	IC	1	
IC444		RC082BM	IC	1	
IC445		NE521D	IC	1	
IC446		MC74HC00AF	IC	1	
IC448		MC74HC08AF	IC	1	
IC470		UPD65022F258	IC	1	
IC471,72		M74F04FP	IC	2	
IC474		AN79L09	IC	1	
IC475		AN78L09	IC	1	
IC476		AN79L05	IC	1	
IC477		M74F157AF	IC	1	
IC478		MC74HC00AF	IC	1	
IC479		UPD65025B030	IC	1	
IC480		AN78L05	IC	1	
IC481		RC082BM	IC	1	
IC489,90		MM74HC221AM	IC	2	
IC491		MC74HC158F	IC	1	
IC492		MC74HC00AF	IC	1	
IC493		SN74LS123NS	IC	1	
IC494		MC74HC74AF	IC	1	
IC495		MN74HC221S	IC	1	
IC496		MC74HC74AF	IC	1	
IC497		M74F74FP	IC	1	
IC498		MC74HC04AF	IC	1	
IC499,00		M74F74FP	IC	2	
IC501		MC74HC74AF	IC	1	
IC502,03		SN74LS123NS	IC	2	
IC504		MM74HC221AM	IC	1	
L1-L8		VLP0017	COIL	8	
L201		VLQEL05S101J	COIL 100UH	1	
L202		VLQEL05S221J	COIL 220UH	1	
L203		VLQEL05S390J	COIL 39UH	1	
L204		VLQEL05S221J	COIL 220UH	1	
L205		VLQEL05S470J	COIL 47UH	1	
L404		VLQ0211M1R8	COIL 1.8UH	1	
Q201		DTC124EK	TRANSISTOR-RESISTOR	1	
Q202		2SB709-R	TRANSISTOR CHIP	1	(Q,R)
Q203,04		2SK606	TRANSISTOR	2	
Q402,03		2SD601-R	TRANSISTOR CHIP	2	(Q,R)
Q404-06		2SB709-R	TRANSISTOR CHIP	3	(Q,R)
Q408		2SB709-R	TRANSISTOR CHIP	1	(Q,R)
			RESISTORS		
R1		ERJ6GEY0R00	M.RESISTOR CH 1/10W 0	1	
R2		ERJ6GEYG472	M.RESISTOR CH 1/10W 4.7K	1	
R2		ERJ6GEY0R00	M.RESISTOR CH 1/10W 0	1	
R3		ERJ6GEYG103	M.RESISTOR CH 1/10W 10K	1	
R3		ERJ6GEYJ682	M.RESISTOR CH 1/10W 6.8K	1	
R4		ERJ6GEYG103	M.RESISTOR CH 1/10W 10K	1	

Ref.No.		Part No.	Part Name & Description	Pcs	Remarks
R4		ERJ6GEYG563	M.RESISTOR CH 1/10W 56K	1	
R5		ERJ6GEYG270	M.RESISTOR CH 1/10W 27	1	
R5		ERJ6GEYJ472	M.RESISTOR CH 1/10W 4.7K	1	
R6		ERJ6GEYJ333	M.RESISTOR CH 1/10W 33K	1	
R6		ERJ6GEY0R00	M.RESISTOR CH 1/10W 0	1	
R7		ERJ6GEYG563	M.RESISTOR CH 1/10W 56K	1	
R9		ERJ6GEY0R00	M.RESISTOR CH 1/10W 0	1	
R11		ERJ6GEYJ272	M.RESISTOR CH 1/10W 2.7K	1	
R11		ERJ6GEY0R00	M.RESISTOR CH 1/10W 0	1	
R12		ERJ6GEYJ272	M.RESISTOR CH 1/10W 2.7K	1	
R13		ERJ6GEYG270	M.RESISTOR CH 1/10W 27	1	
R13		ERJ6GEY0R00	M.RESISTOR CH 1/10W 0	1	
R14		ERJ6GEYG103	M.RESISTOR CH 1/10W 10K	1	
R15,16		ERJ6GEY0R00	M.RESISTOR CH 1/10W 0	2	
R16-18		ERJ6GEY0R00	M.RESISTOR CH 1/10W 0	3	
R19		ERJ6GEYJ272	M.RESISTOR CH 1/10W 2.7K	1	
R19		ERJ6GEY0R00	M.RESISTOR CH 1/10W 0	1	
R20		ERJ6GEYJ272	M.RESISTOR CH 1/10W 2.7K	1	
R21		ERJ6GEY0R00	M.RESISTOR CH 1/10W 0	1	
R21		ERJ6GEY0R00	M.RESISTOR CH 1/10W 0	1	
R22		ERJ6GEYG270	M.RESISTOR CH 1/10W 27	1	
R23		ERJ6GEY0R00	M.RESISTOR CH 1/10W 0	1	
R25		ERJ6GEY0R00	M.RESISTOR CH 1/10W 0	1	
R28,29		ERJ6GEYG103	M.RESISTOR CH 1/10W 10K	2	
R30		ERJ6GEYG182	M.RESISTOR CH 1/10W 1.8K	1	
R31		ERJ6GEYG103	M.RESISTOR CH 1/10W 10K	1	
R34,35		ERJ6GEYJ101	M.RESISTOR CH 1/10W 100	2	
R36-40		ERJ6GEYJ393	M.RESISTOR CH 1/10W 39K	5	
R42,43		ERJ6GEYJ105	M.RESISTOR CH 1/10W 1M	2	
R44		ERJ6GEY0R00	M.RESISTOR CH 1/10W 0	1	
R47-49		ERJ6GEYJ393	M.RESISTOR CH 1/10W 39K	3	
R51,52		ERJ6GEYG472	M.RESISTOR CH 1/10W 4.7K	2	
R53		ERJ6GEYG223	M.RESISTOR CH 1/10W 22K	1	
R55		ERJ6GEYG472	M.RESISTOR CH 1/10W 4.7K	1	
R57		ERJ6GEYG472	M.RESISTOR CH 1/10W 4.7K	1	
R60		ERJ6GEYG152	M.RESISTOR CH 1/10W 1.5K	1	
R61		ERJ6GEYG102	M.RESISTOR CH 1/10W 1K	1	
R62		ERJ6GEYG182	M.RESISTOR CH 1/10W 1.8K	1	
R63		ERJ6GEYG472	M.RESISTOR CH 1/10W 4.7K	1	
R64		ERJ6GEYG152	M.RESISTOR CH 1/10W 1.5K	1	
R65		ERJ6GEYG472	M.RESISTOR CH 1/10W 4.7K	1	
R66		ERJ6GEYG102	M.RESISTOR CH 1/10W 1K	1	
R67		ERJ6GEYG152	M.RESISTOR CH 1/10W 1.5K	1	
R68		ERJ6GEYG472	M.RESISTOR CH 1/10W 4.7K	1	
R69		ERJ6GEYG102	M.RESISTOR CH 1/10W 1K	1	
R70-72		ERJ6GEYJ393	M.RESISTOR CH 1/10W 39K	3	
R73		ERJ6GEY0R00	M.RESISTOR CH 1/10W 0	1	
R76-78		ERJ6GEY0R00	M.RESISTOR CH 1/10W 0	3	
R81-83		ERJ6GEY0R00	M.RESISTOR CH 1/10W 0	3	
R86-88		ERJ6GEY0R00	M.RESISTOR CH 1/10W 0	3	
R90,91		ERJ6GEY0R00	M.RESISTOR CH 1/10W 0	2	
R97		ERJ6GEY0R00	M.RESISTOR CH 1/10W 0	1	
R99		ERJ6GEYJ393	M.RESISTOR CH 1/10W 39K	1	
R100-15		ERJ6GEYJ332	M.RESISTOR CH 1/10W 3.3K	16	
R116		ERJ6GEYJ103	M.RESISTOR CH 1/10W 10K	1	
R117		ERJ6GEYJ274	M.RESISTOR CH 1/10W 270K	1	
R118		ERJ6GEYJ104	M.RESISTOR CH 1/10W 100K	1	
R132		ERJ6GEY0R00	M.RESISTOR CH 1/10W 0	1	
R134		ERJ6GEY0R00	M.RESISTOR CH 1/10W 0	1	
R152		ERJ6GEY0R00	M.RESISTOR CH 1/10W 0	1	
R201		ERJ6GEYJ224	M.RESISTOR CH 1/10W 220K	1	
R202		ERJ6GEYJ684	M.RESISTOR CH 1/10W 680K	1	
R203		ERJ6GEYJ103	M.RESISTOR CH 1/10W 10K	1	
R204,05		ERJ6GEYJ822	M.RESISTOR CH 1/10W 8.2K	2	
R206-10		ERJ6GEYJ222	M.RESISTOR CH 1/10W 2.2K	5	
R211		ERJ6GEYJ683	M.RESISTOR CH 1/10W 68K	1	
R212		ERJ6GEYJ222	M.RESISTOR CH 1/10W 2.2K	1	
R213,14		ERJ6GEYJ103	M.RESISTOR CH 1/10W 10K	2	
R215		ERJ6GEYJ333	M.RESISTOR CH 1/10W 33K	1	
R216		ERJ6GEYJ682	M.RESISTOR CH 1/10W 6.8K	1	
R217		ERJ6GEYJ103	M.RESISTOR CH 1/10W 10K	1	
R218		ERJ6GEYG563	M.RESISTOR CH 1/10W 56K	1	
R219		ERJ6GEYJ681	M.RESISTOR CH 1/10W 680	1	
R220		ERJ6GEYJ184	M.RESISTOR CH 1/10W 180K	1	
R221		ERJ6GEYJ392	M.RESISTOR CH 1/10W 3.9K	1	

Ref.No.		Part No.	Part Name & Description	Pcs	Remarks
R222,23		ERJ6GEYJ102	M.RESISTOR CH 1/10W 1K	2	
R224		ERJ6GEYJ222	M.RESISTOR CH 1/10W 2.2K	1	
R225		ERJ6GEYJ152	M.RESISTOR CH 1/10W 1.5K	1	
R226		ERJ6GEYJ333	M.RESISTOR CH 1/10W 33K	1	
R227		ERJ6GEYJ273	M.RESISTOR CH 1/10W 27K	1	
R228		ERJ6GEYG223	M.RESISTOR CH 1/10W 22K	1	
R229		ERJ6GEYJ105	M.RESISTOR CH 1/10W 1M	1	
R230		ERJ6GEYJ102	M.RESISTOR CH 1/10W 1K	1	
R231		ERJ6GEYJ473	M.RESISTOR CH 1/10W 47K	1	
R232		ERJ6GEYJ123	M.RESISTOR CH 1/10W 12K	1	
R233		ERJ6GEYJ103	M.RESISTOR CH 1/10W 10K	1	
R234,35		ERJ6GEYJ473	M.RESISTOR CH 1/10W 47K	2	
R236,37		ERJ6GEYJ332	M.RESISTOR CH 1/10W 3.3K	2	
R238		ERJ6GEYJ102	M.RESISTOR CH 1/10W 1K	1	
R239		ERJ6GEYJ123	M.RESISTOR CH 1/10W 12K	1	
R240		ERJ6GEYJ103	M.RESISTOR CH 1/10W 10K	1	
R241		ERJ6GEYJ221	M.RESISTOR CH 1/10W 220	1	
R243		ERJ6GEY0R00	M.RESISTOR CH 1/10W 0	1	
R247		ERJ6GEYJ332	M.RESISTOR CH 1/10W 3.3K	1	
R248		ERJ6GEYJ123	M.RESISTOR CH 1/10W 12K	1	
R249		ERJ6GEYJ821	M.RESISTOR CH 1/10W 820	1	
R251-60		ERJ6GEYJ393	M.RESISTOR CH 1/10W 39K	10	
R261		ERJ6GEYJ473	M.RESISTOR CH 1/10W 47K	1	
R262-64		ERJ6GEYG223	M.RESISTOR CH 1/10W 22K	3	
R265		ERJ6GEYJ104	M.RESISTOR CH 1/10W 100K	1	
R266		ERJ6GEYJ122	M.RESISTOR CH 1/10W 1.2K	1	
R267		ERJ6GEYJ473	M.RESISTOR CH 1/10W 47K	1	
R268,69		ERJ6GEYJ153	M.RESISTOR CH 1/10W 15K	2	
R270		ERJ6GEYG223	M.RESISTOR CH 1/10W 22K	1	
R272		ERJ6GEYJ473	M.RESISTOR CH 1/10W 47K	1	
R273		ERJ6GEYJ105	M.RESISTOR CH 1/10W 1M	1	
R274		ERJ6GEYJ104	M.RESISTOR CH 1/10W 100K	1	
R275		ERJ6GEYJ682	M.RESISTOR CH 1/10W 6.8K	1	
R276		ERJ6GEYG223	M.RESISTOR CH 1/10W 22K	1	
R277		ERJ6GEYJ153	M.RESISTOR CH 1/10W 15K	1	
R278		ERJ6GEYJ273	M.RESISTOR CH 1/10W 27K	1	
R279		ERJ6GEYJ332	M.RESISTOR CH 1/10W 3.3K	1	
R280		ERJ6GEYJ682	M.RESISTOR CH 1/10W 6.8K	1	
R281		ERJ6GEY0R00	M.RESISTOR CH 1/10W 0	1	
R282		ERJ6GEYJ471	M.RESISTOR CH 1/10W 470	1	
R283		ERJ6GEYJ333	M.RESISTOR CH 1/10W 33K	1	
R284		ERJ6GEYJ183	M.RESISTOR CH 1/10W 18K	1	
R285		ERJ6GEYJ153	M.RESISTOR CH 1/10W 15K	1	
R288		ERJ6GEYJ105	M.RESISTOR CH 1/10W 1M	1	
R289		ERJ6GEYG223	M.RESISTOR CH 1/10W 22K	1	
R290		ERJ6GEYJ102	M.RESISTOR CH 1/10W 1K	1	
R291		ERJ6GEYJ471	M.RESISTOR CH 1/10W 470	1	
R292		ERJ6GEYG223	M.RESISTOR CH 1/10W 22K	1	
R293		ERJ6GEYJ822	M.RESISTOR CH 1/10W 8.2K	1	
R294		ERJ6GEYJ103	M.RESISTOR CH 1/10W 10K	1	
R295		ERJ6GEYJ105	M.RESISTOR CH 1/10W 1M	1	
R296		ERJ6GEYG223	M.RESISTOR CH 1/10W 22K	1	
R297		ERJ6GEYJ102	M.RESISTOR CH 1/10W 1K	1	
R298-00		ERJ6GEYG223	M.RESISTOR CH 1/10W 22K	3	
R301		ERJ6GEYJ101	M.RESISTOR CH 1/10W 100	1	
R351		ERJ6GEY0R00	M.RESISTOR CH 1/10W 0	1	
R353		ERJ6GEY0R00	M.RESISTOR CH 1/10W 0	1	
R355-58		ERJ6GEY0R00	M.RESISTOR CH 1/10W 0	4	
R361		ERJ6GEY0R00	M.RESISTOR CH 1/10W 0	1	
R366-68		ERJ6GEY0R00	M.RESISTOR CH 1/10W 0	3	
R375		ERJ6GEY0R00	M.RESISTOR CH 1/10W 0	1	
R380		ERJ6GEY0R00	M.RESISTOR CH 1/10W 0	1	
R390-94		ERJ6GEY0R00	M.RESISTOR CH 1/10W 0	5	
R401		ERJ6GEYJ103	M.RESISTOR CH 1/10W 10K	1	
R402		ERJ6GEYJ102	M.RESISTOR CH 1/10W 1K	1	
R403		ERJ6GEYJ393	M.RESISTOR CH 1/10W 39K	1	
R404		ERJ6GEYJ822	M.RESISTOR CH 1/10W 8.2K	1	
R405		ERJ6GEYJ562	M.RESISTOR CH 1/10W 5.6K	1	
R406		ERJ6GEYJ103	M.RESISTOR CH 1/10W 10K	1	
R408		ERJ6GEYJ183	M.RESISTOR CH 1/10W 18K	1	
R409		ERJ6GEYJ681	M.RESISTOR CH 1/10W 680	1	
R410		ERJ6GEYJ332	M.RESISTOR CH 1/10W 3.3K	1	
R411-17		ERJ6GEYJ393	M.RESISTOR CH 1/10W 39K	7	
R418,19		ERJ6GEYJ101	M.RESISTOR CH 1/10W 100	2	
R420		ERJ6GEYJ103	M.RESISTOR CH 1/10W 10K	1	

Ref.No.		Part No.	Part Name & Description	Pcs	Remarks
R421,22		ERJ6GEYJ392	M.RESISTOR CH 1/10W 3.9K	2	
R423		ERJ6GEYJ562	M.RESISTOR CH 1/10W 5.6K	1	
R424		ERJ6GEYJ272	M.RESISTOR CH 1/10W 2.7K	1	
R425		ERJ6GEYJ562	M.RESISTOR CH 1/10W 5.6K	1	
R426		ERJ6GEYJ392	M.RESISTOR CH 1/10W 3.9K	1	
R427		ERJ6GEYJ272	M.RESISTOR CH 1/10W 2.7K	1	
R428		ERJ6GEYG563	M.RESISTOR CH 1/10W 56K	1	
R429		ERJ6GEYJ562	M.RESISTOR CH 1/10W 5.6K	1	
R430		ERJ6GEYJ103	M.RESISTOR CH 1/10W 10K	1	
R431		ERJ6GEYJ183	M.RESISTOR CH 1/10W 18K	1	
R432		ERJ6GEYJ681	M.RESISTOR CH 1/10W 680	1	
R433		ERJ6GEYJ393	M.RESISTOR CH 1/10W 39K	1	
R434		ERJ6GEYJ471	M.RESISTOR CH 1/10W 470	1	
R435		ERJ6GEYJ273	M.RESISTOR CH 1/10W 27K	1	
R436		ERJ6GEYJ823	M.RESISTOR CH 1/10W 82K	1	
R438-41		ERJ6GEY0R00	M.RESISTOR CH 1/10W 0	4	
R444		ERJ6GEY0R00	M.RESISTOR CH 1/10W 0	1	
R445		ERJ6GEYJ152	M.RESISTOR CH 1/10W 1.5K	1	
R446		ERJ6GEYJ392	M.RESISTOR CH 1/10W 3.9K	1	
R447		ERJ6GEYJ562	M.RESISTOR CH 1/10W 5.6K	1	
R448		ERJ6GEY0R00	M.RESISTOR CH 1/10W 0	1	
R450		ERJ6GEYJ393	M.RESISTOR CH 1/10W 39K	1	
R451		ERJ6GEYJ471	M.RESISTOR CH 1/10W 470	1	
R452		ERJ6GEYJ273	M.RESISTOR CH 1/10W 27K	1	
R453		ERJ6GEYJ183	M.RESISTOR CH 1/10W 18K	1	
R454,55		ERJ6GEY0R00	M.RESISTOR CH 1/10W 0	2	
R456		ERJ6GEYG563	M.RESISTOR CH 1/10W 56K	1	
R457		ERJ6GEYJ472	M.RESISTOR CH 1/10W 4.7K	1	
R458		ERJ6GEYJ683	M.RESISTOR CH 1/10W 68K	1	
R459		ERJ6GEYJ103	M.RESISTOR CH 1/10W 10K	1	
R461		ERJ6GEYJ273	M.RESISTOR CH 1/10W 27K	1	
R462		ERJ6GEYJ101	M.RESISTOR CH 1/10W 100	1	
R463		ERJ6GEYJ393	M.RESISTOR CH 1/10W 39K	1	
R464		ERJ6GEYJ562	M.RESISTOR CH 1/10W 5.6K	1	
R465		ERJ6GEYJ183	M.RESISTOR CH 1/10W 18K	1	
R466,67		ERJ6GEYJ182	M.RESISTOR CH 1/10W 1.8K	2	
R468		ERJ6GEYJ153	M.RESISTOR CH 1/10W 15K	1	
R469		ERJ6GEYJ681	M.RESISTOR CH 1/10W 680	1	
R470		ERJ6GEYJ123	M.RESISTOR CH 1/10W 12K	1	
R471		ERJ6GEYJ821	M.RESISTOR CH 1/10W 820	1	
R472		ERJ6GEYJ153	M.RESISTOR CH 1/10W 15K	1	
R473		ERJ6GEYJ182	M.RESISTOR CH 1/10W 1.8K	1	
R474		ERJ6GEYJ153	M.RESISTOR CH 1/10W 15K	1	
R475,76		ERJ6GEYJ332	M.RESISTOR CH 1/10W 3.3K	2	
R477		ERJ6GEYJ222	M.RESISTOR CH 1/10W 2.2K	1	
R478		ERJ6GEYJ562	M.RESISTOR CH 1/10W 5.6K	1	
R480		ERJ6GEYJ273	M.RESISTOR CH 1/10W 27K	1	
R481		ERJ6GEYJ153	M.RESISTOR CH 1/10W 15K	1	
R482		ERJ6GEYJ682	M.RESISTOR CH 1/10W 6.8K	1	
R483		ERJ6GEYJ152	M.RESISTOR CH 1/10W 1.5K	1	
R484,85		ERJ6GEYJ102	M.RESISTOR CH 1/10W 1K	2	
R486		ERJ6GEYG563	M.RESISTOR CH 1/10W 56K	1	
R487		ERJ6GEYJ103	M.RESISTOR CH 1/10W 10K	1	
R488		ERJ6GEYJ123	M.RESISTOR CH 1/10W 12K	1	
R489		ERJ6GEYJ183	M.RESISTOR CH 1/10W 18K	1	
R491		ERJ6GEY0R00	M.RESISTOR CH 1/10W 0	1	
R494-96		ERJ6GEY0R00	M.RESISTOR CH 1/10W 0	3	
R498		ERJ6GEYJ562	M.RESISTOR CH 1/10W 5.6K	1	
R499		ERJ6GEYJ472	M.RESISTOR CH 1/10W 4.7K	1	
R500		ERJ6GEY0R00	M.RESISTOR CH 1/10W 0	1	
R502		ERJ6GEYJ152	M.RESISTOR CH 1/10W 1.5K	1	
R503,04		ERJ6GEYJ102	M.RESISTOR CH 1/10W 1K	2	
R506		ERJ6GEY0R00	M.RESISTOR CH 1/10W 0	1	
R524		ERJ6GEYJ152	M.RESISTOR CH 1/10W 1.5K	1	
R529		ERJ6GEY0R00	M.RESISTOR CH 1/10W 0	1	
R530		ERJ6GEYJ102	M.RESISTOR CH 1/10W 1K	1	
R531		ERJ6GEYJ101	M.RESISTOR CH 1/10W 100	1	
R532		ERJ6GEY0R00	M.RESISTOR CH 1/10W 0	1	
R569		ERJ6GEYJ562	M.RESISTOR CH 1/10W 5.6K	1	
R580		ERJ6GEYJ473	M.RESISTOR CH 1/10W 47K	1	
R581,82		ERJ6GEYJ105	M.RESISTOR CH 1/10W 1M	2	
R583,84		ERJ6GEYJ822	M.RESISTOR CH 1/10W 8.2K	2	
R586		ERJ6GEY0R00	M.RESISTOR CH 1/10W 0	1	
R587		ERJ6GEYJ473	M.RESISTOR CH 1/10W 47K	1	
R588		ERJ6GEYJ104	M.RESISTOR CH 1/10W 100K	1	

Ref.No.		Part No.	Part Name & Description	Pcs	Remarks
R589		ERJ6GEYJ473	M.RESISTOR CH 1/10W 47K	1	
R590,91		ERJ6GEY0R00	M.RESISTOR CH 1/10W 0	2	
R594		ERJ6GEYJ153	M.RESISTOR CH 1/10W 15K	1	
R595		ERJ6GEYJ473	M.RESISTOR CH 1/10W 47K	1	
R596		ERJ6GEYJ103	M.RESISTOR CH 1/10W 10K	1	
R597		ERJ6GEYJ562	M.RESISTOR CH 1/10W 5.6K	1	
R603		ERJ6GEY0R00	M.RESISTOR CH 1/10W 0	1	
R607		ERJ6GEY0R00	M.RESISTOR CH 1/10W 0	1	
SW4		VSS023710	SWITCH	1	
SW5		VSS0184	SWITCH	1	
SW7,W8		VSS0126	SWITCH	2	
SW201		VSS0126	SWITCH	1	
SW203		VSR0045	SWITCH	1	
TP1,P2		VJR0646	TEST POINT	2	
TP201-08		VJR0646	TEST POINT	8	
TP210-15		VJR0646	TEST POINT	6	
TP412,13		VJR0646	TEST POINT	2	
TP416,17		VJR0646	TEST POINT	2	
TP422-27		VJR0646	TEST POINT	6	
TPG201		VJR0646	TEST POINT	1	
TPG401,02		VJR0646	TEST POINT	2	
VR1		VRV0109B103	V.RESISTOR 10K	1	
VR2		VRV0109B202	V.RESISTOR 2K	1	
VR201		VRV0109B203	V.RESISTOR 20K	1	
VR202		VRV0109B103	V.RESISTOR 10K	1	
VR204		VRV0064B502	V.RESISTOR 5K	1	
VR205		VRV0109B502	V.RESISTOR 5K	1	
VR206,07		VRV0064B502	V.RESISTOR 5K	2	
VR401,02		VRV0109B502	V.RESISTOR 5K	2	
VR403		VRV0109B202	V.RESISTOR 2K	1	
VR405,06		VRV0064B502	V.RESISTOR 5K	2	
VR408		VRV0109B202	V.RESISTOR 2K	1	
VR409		VRV0109B502	V.RESISTOR 5K	1	
X201		VSX0114	CRYSTAL OSCILLATOR	1	
X202		VSX0270	CRYSTAL OSCILLATOR	1	
X203,04		VSX0280	CRYSTAL OSCILLATOR	2	
X501		VSX0211	CRYSTAL OSCILLATOR	1	
			MISCELLANEOUS		
		VML2143	CARD PULLER	1	
		VML2144	CARD PULLER	1	
		VMS4925	PIN	1	
		VMZ1547	BARRIER	1	
		VXA3966	P.C.B. SHIELD PLATE	1	
		XYNV3+K6FR	SCREW	7	

Ref.No.		Part No.	Part Name & Description	Pcs	Remarks
	■	VEP88063M	P.C.BOARD W/COMPONENT		FOR AU-65H
			W2 ENCODER		
	■	VEP80632A	P.C.BOARD W/COMPONENT		ON VEP88063M
			W2 SUB		
			CAPACITORS		
C1		ECUM1H103KBN	C.CAPACITOR CH 50V 0.01U	1	
C2		ECEA1CU221	E.CAPACITOR 16V 220U	1	
C3		ECUM1H103KBN	C.CAPACITOR CH 50V 0.01U	1	
C4		ECEA0JU101	E.CAPACITOR 6.3V 100U	1	
C5		ECUM1H103KBN	C.CAPACITOR CH 50V 0.01U	1	
C6		ECEA1CU221	E.CAPACITOR 16V 220U	1	
C7-C9		ECUM1H103KBN	C.CAPACITOR CH 50V 0.01U	3	
C10		ECUM1H103KBN	C.CAPACITOR CH 50V 0.01U	1	
C11		ECEA1AU101	E.CAPACITOR 10V 100U	1	
C12,13		ECUM1H103KBN	C.CAPACITOR CH 50V 0.01U	2	
C14		ECEA1AU101	E.CAPACITOR 10V 100U	1	
C15		ECUM1H470JCN	C.CAPACITOR CH 50V 47P	1	
C16		ECUM1H103KBN	C.CAPACITOR CH 50V 0.01U	1	
C17		ECUM1H120JCN	C.CAPACITOR CH 50V 12P	1	
C18		ECUM1H103KBN	C.CAPACITOR CH 50V 0.01U	1	
C19,20		ECEA1CU221	E.CAPACITOR 16V 220U	2	
C21,22		ECUM1H103KBN	C.CAPACITOR CH 50V 0.01U	2	
C23		ECUM1H470JCN	C.CAPACITOR CH 50V 47P	1	
C24,25		ECUM1H151JCN	C.CAPACITOR CH 50V 150P	2	
C26		ECUM1E104ZFN	C.CAPACITOR CH 25V 0.1U	1	
C27		ECUM1H270JCN	C.CAPACITOR CH 50V 27P	1	
C28		ECQM1H183JF	P.CAPACITOR 50V 0.018U	1	
C29		ECUM1H103KBN	C.CAPACITOR CH 50V 0.01U	1	
C30		ECEA1EN4R7S	E.CAPACITOR 25V 4.7U	1	
C31		ECEA1HN2R2S	E.CAPACITOR 50V 2.2U	1	
C32		ECUM1H103KBN	C.CAPACITOR CH 50V 0.01U	1	
C33		ECEA0JU101	E.CAPACITOR 6.3V 100U	1	
C35		ECEA0JU221	E.CAPACITOR 6.3V 220U	1	
C36		ECUM1H103KBN	C.CAPACITOR CH 50V 0.01U	1	
C37		ECEA0JU221	E.CAPACITOR 6.3V 220U	1	
C38-46		ECUM1H103KBN	C.CAPACITOR CH 50V 0.01U	9	
C49,50		ECUM1H103KBN	C.CAPACITOR CH 50V 0.01U	2	
C51		ECEA1AU101	E.CAPACITOR 10V 100U	1	
C52		ECUM1E104ZFN	C.CAPACITOR CH 25V 0.1U	1	
C53		ECUM1H103KBN	C.CAPACITOR CH 50V 0.01U	1	
C54		ECEA1AU101	E.CAPACITOR 10V 100U	1	
C55		ECUM1H220JCN	C.CAPACITOR CH 50V 22P	1	
C56		ECUM1H103KBN	C.CAPACITOR CH 50V 0.01U	1	
C57		ECUM1H150JCN	C.CAPACITOR CH 50V 15P	1	
C58		ECUM1H103KBN	C.CAPACITOR CH 50V 0.01U	1	
C59		ECEA0JU101	E.CAPACITOR 6.3V 100U	1	
C60		ECUM1H120JCN	C.CAPACITOR CH 50V 12P	1	
C61		ECEA0JU221	E.CAPACITOR 6.3V 220U	1	
C62		ECUM1H103KBN	C.CAPACITOR CH 50V 0.01U	1	
C63		ECEA0JU221	E.CAPACITOR 6.3V 220U	1	
C64-73		ECUM1H103KBN	C.CAPACITOR CH 50V 0.01U	10	
C76		ECUM1H270JCN	C.CAPACITOR CH 50V 27P	1	
C77		ECUM1E104ZFN	C.CAPACITOR CH 25V 0.1U	1	
C78		ECQM1H223JF	P.CAPACITOR 50V 0.022U	1	
C79		ECUM1H103KBN	C.CAPACITOR CH 50V 0.01U	1	
C80,81		ECEA1HN2R2S	E.CAPACITOR 50V 2.2U	2	
C82,83		ECUM1E104ZFN	C.CAPACITOR CH 25V 0.1U	2	
C84		ECEA0JU470	E.CAPACITOR 6.3V 47U	1	
C85,86		ECUM1E104ZFN	C.CAPACITOR CH 25V 0.1U	2	
C87		ECUM1H103KBN	C.CAPACITOR CH 50V 0.01U	1	
C88		ECUM1E104ZFN	C.CAPACITOR CH 25V 0.1U	1	
C89		ECKF1H103ZF	C.CAPACITOR 50V 0.01U	1	
C113		ECUM1E104ZFN	C.CAPACITOR CH 25V 0.1U	1	
C114-17		ECUM1H103KBN	C.CAPACITOR CH 50V 0.01U	4	
C120		ECUM1H103KBN	C.CAPACITOR CH 50V 0.01U	1	
C121		ECEA1AU470	E.CAPACITOR 10V 47U	1	
C122		ECUM1H103KBN	C.CAPACITOR CH 50V 0.01U	1	
C123		ECUM1C104KBN	C.CAPACITOR CH 16V 0.1U	1	
C124		ECUM1H181JCN	C.CAPACITOR CH 50V 180P	1	

Ref.No.		Part No.	Part Name & Description	Pcs	Remarks
C125		ECUM1E104ZFN	C.CAPACITOR CH 25V 0.1U	1	
C126		ECUM1C104KBN	C.CAPACITOR CH 16V 0.1U	1	
C127		ECUM1H180JCN	C.CAPACITOR CH 50V 18P	1	
C128		ECUM1H680JCN	C.CAPACITOR CH 50V 68P	1	
C129,30		ECUM1C104KBN	C.CAPACITOR CH 16V 0.1U	2	
C131		ECEA1HN010S	E.CAPACITOR 50V 1U	1	
C132		ECUM1H103KBN	C.CAPACITOR CH 50V 0.01U	1	
C133		ECEA1AU470	E.CAPACITOR 10V 47U	1	
C134		ECUM1E104ZFN	C.CAPACITOR CH 25V 0.1U	1	
C135		ECUM1H391JCN	C.CAPACITOR CH 50V 390P	1	
C136		ECUM1H151JCN	C.CAPACITOR CH 50V 150P	1	
C137		ECUM1H121JCN	C.CAPACITOR CH 50V 120P	1	
C138		ECUM1H391JCN	C.CAPACITOR CH 50V 390P	1	
C139-41		ECUM1H103KBN	C.CAPACITOR CH 50V 0.01U	3	
C142		ECEA1AU470	E.CAPACITOR 10V 47U	1	
C143,44		ECUM1C104KBN	C.CAPACITOR CH 16V 0.1U	2	
C145		ECUM1H121JCN	C.CAPACITOR CH 50V 120P	1	
C146		ECUM1E104ZFN	C.CAPACITOR CH 25V 0.1U	1	
C147-49		ECUM1C104KBN	C.CAPACITOR CH 16V 0.1U	3	
C150		ECEA1HN010S	E.CAPACITOR 50V 1U	1	
C151		ECUM1H103KBN	C.CAPACITOR CH 50V 0.01U	1	
C152		ECEA1AU470	E.CAPACITOR 10V 47U	1	
C154		ECUM1E104ZFN	C.CAPACITOR CH 25V 0.1U	1	
C155		ECUM1H391JCN	C.CAPACITOR CH 50V 390P	1	
C156		ECUM1H151JCN	C.CAPACITOR CH 50V 150P	1	
C157		ECUM1H121JCN	C.CAPACITOR CH 50V 120P	1	
C158		ECUM1H391JCN	C.CAPACITOR CH 50V 390P	1	
C159,60		ECUM1H821JCN	C.CAPACITOR CH 50V 820P	2	
C161,62		ECEA1AN470S	E.CAPACITOR 10V 47U	2	
C163		ECEA1CU470	E.CAPACITOR 16V 47U	1	
C164		ECQM1H104JF	P.CAPACITOR 50V 0.1U	1	
C165		ECEA1AN470S	E.CAPACITOR 10V 47U	1	
C166		ECUM1H221JCN	C.CAPACITOR CH 50V 220P	1	
C200		ECUM1H103KBN	C.CAPACITOR CH 50V 0.01U	1	
C201		ECEA1AU101	E.CAPACITOR 10V 100U	1	
C202,03		ECUM1H103KBN	C.CAPACITOR CH 50V 0.01U	2	
C204		ECEA1AU101	E.CAPACITOR 10V 100U	1	
C205		ECUM1H103KBN	C.CAPACITOR CH 50V 0.01U	1	
C206		ECUM1H150JCN	C.CAPACITOR CH 50V 15P	1	
C207		ECUM1H470JCN	C.CAPACITOR CH 50V 47P	1	
C209		ECUM1H220JCN	C.CAPACITOR CH 50V 22P	1	
C210		ECUM1H100DCN	C.CAPACITOR CH 50V 10P	1	
C211		ECUM1C104KBN	C.CAPACITOR CH 16V 0.1U	1	
C212		ECUM1E104ZFN	C.CAPACITOR CH 25V 0.1U	1	
C213		ECUM1H221JCN	C.CAPACITOR CH 50V 220P	1	
C214		ECUM1H270JCN	C.CAPACITOR CH 50V 27P	1	
C215		ECUM1H103KBN	C.CAPACITOR CH 50V 0.01U	1	
C219		ECUM1H560JCN	C.CAPACITOR CH 50V 56P	1	
C220		ECUM1E104ZFN	C.CAPACITOR CH 25V 0.1U	1	
C223		ECUM1H221JCN	C.CAPACITOR CH 50V 220P	1	
C224		ECUM1H030DCN	C.CAPACITOR CH 50V 3P	1	
C226		ECEA1HNR47S	E.CAPACITOR 50V 0.47U	1	
C227,28		ECUM1H103KBN	C.CAPACITOR CH 50V 0.01U	2	
C229		ECEA1AU101	E.CAPACITOR 10V 100U	1	
C230,31		ECUM1H103KBN	C.CAPACITOR CH 50V 0.01U	2	
C232		ECEA1AU101	E.CAPACITOR 10V 100U	1	
C233		ECUM1H103KBN	C.CAPACITOR CH 50V 0.01U	1	
C235		ECUM1H120JCN	C.CAPACITOR CH 50V 12P	1	
C236		ECUM1H560JCN	C.CAPACITOR CH 50V 56P	1	
C238		ECUM1H100DCN	C.CAPACITOR CH 50V 10P	1	
C239		ECUM1H680JCN	C.CAPACITOR CH 50V 68P	1	
C240		ECUM1H330JCN	C.CAPACITOR CH 50V 33P	1	
C241		ECUM1H100DCN	C.CAPACITOR CH 50V 10P	1	
C242		ECEA1HNR47S	E.CAPACITOR 50V 0.47U	1	
C243		ECUM1C104KBN	C.CAPACITOR CH 16V 0.1U	1	
C244		ECUM1E104ZFN	C.CAPACITOR CH 25V 0.1U	1	
C245		ECUM1H103KBN	C.CAPACITOR CH 50V 0.01U	1	
C247		ECUM1H103KBN	C.CAPACITOR CH 50V 0.01U	1	
C248		ECEA0JU470	E.CAPACITOR 6.3V 47U	1	
C249		ECUM1H103KBN	C.CAPACITOR CH 50V 0.01U	1	
C257,58		ECUM1E104ZFN	C.CAPACITOR CH 25V 0.1U	2	
C260		ECUM1H221JCN	C.CAPACITOR CH 50V 220P	1	
C261		ECUM1H030DCN	C.CAPACITOR CH 50V 3P	1	
C263		ECUM1H103KBN	C.CAPACITOR CH 50V 0.01U	1	
C264		ECEA1HNR47S	E.CAPACITOR 50V 0.47U	1	

Ref.No.	Part No.	Part Name & Description	Pcs	Remarks
C266,67	ECUM1E104ZFN	C.CAPACITOR CH 25V 0.1U	2	
C268	ECUM1H103KBN	C.CAPACITOR CH 50V 0.01U	1	
C269	ECEA1AU101	E.CAPACITOR 10V 100U	1	
C270,71	ECUM1H103KBN	C.CAPACITOR CH 50V 0.01U	2	
C272	ECEA1AU101	E.CAPACITOR 10V 100U	1	
C273	ECUM1H103KBN	C.CAPACITOR CH 50V 0.01U	1	
C275	ECUM1H120JCN	C.CAPACITOR CH 50V 12P	1	
C276	ECUM1H560JCN	C.CAPACITOR CH 50V 56P	1	
C278	ECUM1H100DCN	C.CAPACITOR CH 50V 10P	1	
C279	ECUM1H680JCN	C.CAPACITOR CH 50V 68P	1	
C280	ECUM1H330JCN	C.CAPACITOR CH 50V 33P	1	
C281	ECUM1H100DCN	C.CAPACITOR CH 50V 10P	1	
C282	ECUM1C104KBN	C.CAPACITOR CH 16V 0.1U	1	
C283	ECUM1E104ZFN	C.CAPACITOR CH 25V 0.1U	1	
C284	ECUM1H103KBN	C.CAPACITOR CH 50V 0.01U	1	
C291	ECUM1H103KBN	C.CAPACITOR CH 50V 0.01U	1	
C292	ECEA1CU221	E.CAPACITOR 16V 220U	1	
C293	ECUM1H103KBN	C.CAPACITOR CH 50V 0.01U	1	
C294	ECEA0JU101	E.CAPACITOR 6.3V 100U	1	
C297,98	ECUM1E104ZFN	C.CAPACITOR CH 25V 0.1U	2	
C299	ECUM1H103KBN	C.CAPACITOR CH 50V 0.01U	1	
C300	ECEA1AU101	E.CAPACITOR 10V 100U	1	
C301	ECUM1H103KBN	C.CAPACITOR CH 50V 0.01U	1	
C303	ECUM1H271JCN	C.CAPACITOR CH 50V 270P	1	
C304	ECUM1H330JCN	C.CAPACITOR CH 50V 33P	1	
C305,06	ECEA1HNR47S	E.CAPACITOR 50V 0.47U	2	
C307,08	ECQM1H104JF	P.CAPACITOR 50V 0.1U	2	
C311	ECUM1H560JCN	C.CAPACITOR CH 50V 56P	1	
C312,13	ECUM1H120JCN	C.CAPACITOR CH 50V 12P	2	
C314	ECUM1H560JCN	C.CAPACITOR CH 50V 56P	1	
C501,02	ECEA1CU101	E.CAPACITOR 16V 100U	2	
C503	ECUM1H330JCN	C.CAPACITOR CH 50V 33P	1	
C504	ECUM1C104KBN	C.CAPACITOR CH 16V 0.1U	1	
C505	ECUM1H103KBN	C.CAPACITOR CH 50V 0.01U	1	
C506	ECEA1HNR47S	E.CAPACITOR 50V 0.47U	1	
C507,08	ECUM1H103KBN	C.CAPACITOR CH 50V 0.01U	2	
C510	ECUM1H103KBN	C.CAPACITOR CH 50V 0.01U	1	
C517	ECUM1H103KBN	C.CAPACITOR CH 50V 0.01U	1	
C518	ECUM1H330JCN	C.CAPACITOR CH 50V 33P	1	
C519,20	ECUM1H103KBN	C.CAPACITOR CH 50V 0.01U	2	
C521	ECEA0JU470	E.CAPACITOR 6.3V 47U	1	
C522	ECUM1H220JCN	C.CAPACITOR CH 50V 22P	1	
C523	ECUM1H181JCN	C.CAPACITOR CH 50V 180P	1	
C524	ECUM1H103KBN	C.CAPACITOR CH 50V 0.01U	1	
C525	ECEA0JU101	E.CAPACITOR 6.3V 100U	1	
C526	ECUM1H103KBN	C.CAPACITOR CH 50V 0.01U	1	
C527,28	ECEA1CU101	E.CAPACITOR 16V 100U	2	
C531	ECEA1CU101	E.CAPACITOR 16V 100U	1	
C532	ECUM1H103KBN	C.CAPACITOR CH 50V 0.01U	1	
C533	ECEA1CU101	E.CAPACITOR 16V 100U	1	
C534,35	ECUM1H103KBN	C.CAPACITOR CH 50V 0.01U	2	
C536,37	ECUM1H560JCN	C.CAPACITOR CH 50V 56P	2	
C538,39	ECUM1H103KBN	C.CAPACITOR CH 50V 0.01U	2	
C540	ECUM1E104ZFN	C.CAPACITOR CH 25V 0.1U	1	
C541	ECUM1H270JCN	C.CAPACITOR CH 50V 27P	1	
C542	ECUM1H221JCN	C.CAPACITOR CH 50V 220P	1	
C543	ECUM1H120JCN	C.CAPACITOR CH 50V 12P	1	
C546	ECUM1H101JCN	C.CAPACITOR CH 50V 100P	1	
C547	ECUM1H470JCN	C.CAPACITOR CH 50V 47P	1	
C548	ECUM1H100DCN	C.CAPACITOR CH 50V 10P	1	
C549	ECUM1H330JCN	C.CAPACITOR CH 50V 33P	1	
C550	ECUM1H103KBN	C.CAPACITOR CH 50V 0.01U	1	
C551	ECUM1H471JCN	C.CAPACITOR CH 50V 470P	1	
C552	ECUM1H270JCN	C.CAPACITOR CH 50V 27P	1	
C553	ECUM1H103KBN	C.CAPACITOR CH 50V 0.01U	1	
C554	ECUM1E104ZFN	C.CAPACITOR CH 25V 0.1U	1	
C555	ECUM1H103KBN	C.CAPACITOR CH 50V 0.01U	1	
C559	ECEA0JU470	E.CAPACITOR 6.3V 47U	1	
C560	ECUM1H103KBN	C.CAPACITOR CH 50V 0.01U	1	
C561	ECEA0JN330S	E.CAPACITOR 6.3V 33U	1	
C562	ECUM1H680JCN	C.CAPACITOR CH 50V 68P	1	
C563	ECUM1H271JCN	C.CAPACITOR CH 50V 270P	1	
C564	ECUM1H151JCN	C.CAPACITOR CH 50V 150P	1	
C565	ECUM1H471JCN	C.CAPACITOR CH 50V 470P	1	
C566	ECEA1CU470	E.CAPACITOR 16V 47U	1	
C567-69	ECUM1H103KBN	C.CAPACITOR CH 50V 0.01U	3	
C570	ECEA1CU470	E.CAPACITOR 16V 47U	1	
C571	ECUM1H103KBN	C.CAPACITOR CH 50V 0.01U	1	
C572	ECUM1E104ZFN	C.CAPACITOR CH 25V 0.1U	1	
C573	ECUM1H103KBN	C.CAPACITOR CH 50V 0.01U	1	
C574,75	ECUM1H220JCN	C.CAPACITOR CH 50V 22P	2	
C576,77	ECUM1H103KBN	C.CAPACITOR CH 50V 0.01U	2	
C578	ECEA0JU101	E.CAPACITOR 6.3V 100U	1	
C579	ECUM1E104ZFN	C.CAPACITOR CH 25V 0.1U	1	
C580,81	ECUM1H220JCN	C.CAPACITOR CH 50V 22P	2	
C582	ECEA0JU101	E.CAPACITOR 6.3V 100U	1	
C583	ECUM1E104ZFN	C.CAPACITOR CH 25V 0.1U	1	
C584	ECUM1H103KBN	C.CAPACITOR CH 50V 0.01U	1	
C585	ECUM1H820JCN	C.CAPACITOR CH 50V 82P	1	
C586	ECUM1H100DCN	C.CAPACITOR CH 50V 10P	1	
C587,88	ECUM1H103KBN	C.CAPACITOR CH 50V 0.01U	2	
C589	ECUM1H271JCN	C.CAPACITOR CH 50V 270P	1	
C590	ECUM1H221JCN	C.CAPACITOR CH 50V 220P	1	
C591	ECUM1H820JCN	C.CAPACITOR CH 50V 82P	1	
C592-97	ECUM1H103KBN	C.CAPACITOR CH 50V 0.01U	6	
C598	ECEA1CU101	E.CAPACITOR 16V 100U	1	
C599,00	ECUM1H103KBN	C.CAPACITOR CH 50V 0.01U	2	
C601	ECEA1CU101	E.CAPACITOR 16V 100U	1	
C602	ECUM1H103KBN	C.CAPACITOR CH 50V 0.01U	1	
C603	ECEA1AU101	E.CAPACITOR 10V 100U	1	
C604	ECUM1H103KBN	C.CAPACITOR CH 50V 0.01U	1	
C605	ECEA1AU101	E.CAPACITOR 10V 100U	1	
C606	ECUM1H103KBN	C.CAPACITOR CH 50V 0.01U	1	
C607	ECEA0JU101	E.CAPACITOR 6.3V 100U	1	
C608	ECUM1H103KBN	C.CAPACITOR CH 50V 0.01U	1	
C609	ECEA0JU101	E.CAPACITOR 6.3V 100U	1	
C610	ECUM1H103KBN	C.CAPACITOR CH 50V 0.01U	1	
C611	ECUM1E104ZFN	C.CAPACITOR CH 25V 0.1U	1	
C612	ECUM1H103KBN	C.CAPACITOR CH 50V 0.01U	1	
C615-18	ECUM1H103KBN	C.CAPACITOR CH 50V 0.01U	4	
C619	ECUM1H221JCN	C.CAPACITOR CH 50V 220P	1	
C620	ECQM1H104JF	P.CAPACITOR 50V 0.1U	1	
C621	ECEA1CU100	E.CAPACITOR 16V 10U	1	
C622	ECQM1H104JF	P.CAPACITOR 50V 0.1U	1	
C623	ECEA1CU470	E.CAPACITOR 16V 47U	1	
C624	ECQM1H104JF	P.CAPACITOR 50V 0.1U	1	
C625	ECEA1CU470	E.CAPACITOR 16V 47U	1	
C626	ECQM1H104JF	P.CAPACITOR 50V 0.1U	1	
C627,28	ECUM1H122JN	C.CAPACITOR CH 50V 1200P	2	
C629	ECUM1H221JCN	C.CAPACITOR CH 50V 220P	1	
C630,31	ECUM1H122JN	C.CAPACITOR CH 50V 1200P	2	
C632	ECUM1H103KBN	C.CAPACITOR CH 50V 0.01U	1	
C635	ECCF1H120JC	C.CAPACITOR 50V 12P	1	
C800	ECUM1H122JN	C.CAPACITOR CH 50V 1200P	1	
C801	ECUM1H151JCN	C.CAPACITOR CH 50V 150P	1	
C802	ECQM1H122JF	P.CAPACITOR 50V 1200P	1	
C803	ECQV1H684JZ	P.CAPACITOR 50V 0.68U	1	
C804,06	ECUM1H151JCN	C.CAPACITOR CH 50V 150P	2	
C808	ECUM1H151JCN	C.CAPACITOR CH 50V 150P	1	
C809,10	ECUM1H122JN	C.CAPACITOR CH 50V 1200P	2	
C812	ECUM1H103KBN	C.CAPACITOR CH 50V 0.01U	1	
C813	ECUM1H101JCN	C.CAPACITOR CH 50V 100P	1	
C814-22	ECUM1H122JN	C.CAPACITOR CH 50V 1200P	9	
C823-25	ECUM1E104ZFN	C.CAPACITOR CH 25V 0.1U	3	
C827	ECEA0JU101	E.CAPACITOR 6.3V 100U	1	
C828,29	ECUM1H101JCN	C.CAPACITOR CH 50V 100P	2	
C830	ECUM1H820JCN	C.CAPACITOR CH 50V 82P	1	
C831	ECUM1H103KBN	C.CAPACITOR CH 50V 0.01U	1	
C832	ECUM1E104ZFN	C.CAPACITOR CH 25V 0.1U	1	
C834	ECEA1CN100S	E.CAPACITOR 16V 10U	1	
C835	ECEA1EN4R7S	E.CAPACITOR 25V 4.7U	1	
C836	ECEA0JN330S	E.CAPACITOR 6.3V 33U	1	
C837	ECEA1EN4R7S	E.CAPACITOR 25V 4.7U	1	
C838	ECUM1E104ZFN	C.CAPACITOR CH 25V 0.1U	1	
C841	ECUM1H103KBN	C.CAPACITOR CH 50V 0.01U	1	
C842	ECEA0JU101	E.CAPACITOR 6.3V 100U	1	
C843,44	ECUM1H103KBN	C.CAPACITOR CH 50V 0.01U	2	
C845	ECEA0JU101	E.CAPACITOR 6.3V 100U	1	
C846,47	ECUM1H103KBN	C.CAPACITOR CH 50V 0.01U	2	
C848	ECEA0JU101	E.CAPACITOR 6.3V 100U	1	

Ref.No.		Part No.	Part Name & Description	Pcs	Remarks
C849		ECUM1H103KBN	C.CAPACITOR CH 50V 0.01U	1	
C850		ECEA0JU101	E.CAPACITOR 6.3V 100U	1	
C851		ECUM1H820JCN	C.CAPACITOR CH 50V 82P	1	
C852		ECUM1H103KBN	C.CAPACITOR CH 50V 0.01U	1	
C853		ECUM1H122JN	C.CAPACITOR CH 50V 1200P	1	
C854		ECQB1H272JF	P.CAPACITOR 50V 2700P	1	
C855,56		ECCF1H331JC	C.CAPACITOR 50V 330P	2	
C857		ECCF1H330JC	C.CAPACITOR 50V 33P	1	
C1001		ECEA1HU010	E.CAPACITOR 50V 1U	1	
C1003,04		ECEA1CN100S	E.CAPACITOR 16V 10U	2	
C1005		ECUM1H221JCN	C.CAPACITOR CH 50V 220P	1	
C1006		ECUM1H470JCN	C.CAPACITOR CH 50V 47P	1	
D1		1SZ51	DIODE	1	
D2		MA153	DIODE	1	
D4		MA153	DIODE	1	
D8		MA151WK	DIODE	1	
D11		MA151WK	DIODE	1	
D200,01		RD4.7EB2	ZENER 4.7V	2	
D203,04		MA151K	DIODE	2	
D210		MA151K	DIODE	1	
D501		RD3.6EB	ZENER 3.6V	1	
D508		RD4.7EB2	ZENER 4.7V	1	
D510,11		MA335-R	DIODE	2	
D512		MA153	DIODE	1	
D514		MA151K	DIODE	1	
D800		MA704	DIODE	1	
D801		MA153	DIODE	1	
D802		MA151K	DIODE	1	
D803		MA165TA	DIODE	1	
FL1		VLF0650	FILTER	1	
FL3		VLF0754	FILTER	1	
FL200		VLF0712	FILTER	1	
FL201,02		VLF0753	FILTER	2	
IC1		AN78N09	IC	1	
IC1		MC10107L	IC	1	
IC2		AN79N09	IC	1	
IC3		MC74HC4053F	IC	1	
IC4-C6		TL082CPS	IC	3	
IC7		HA19211BNT	IC	1	
IC8		MC74HC574AF	IC	1	
IC9		TL082CPS	IC	1	
IC10-12		TL082CPS	IC	3	
IC13		HA19211BNT	IC	1	
IC14		MC74HC574AF	IC	1	
IC15		AN78N09	IC	1	
IC16		AN79N09	IC	1	
IC17		AN79L05	IC	1	
IC18,19		AN78N05	IC	2	
IC26,27		AN91A12S	IC	2	
IC28		MC74HC08AF	IC	1	
IC29		SN74LS123NS	IC	1	
IC30		NE521D	IC	1	
IC32		AN78N05	IC	1	
IC33		AN79N05	IC	1	
IC200		AN78N09	IC	1	
IC201		AN79N09	IC	1	
IC202		AN78N09	IC	1	
IC203		AN79N09	IC	1	
IC204		AN78N09	IC	1	
IC205		AN79N09	IC	1	
IC206		TL082CPS	IC	1	
IC207		CA3054	IC	1	
IC208-10		TL082CPS	IC	3	
IC211		AN78L05	IC	1	
IC215		TL082CPS	IC	1	
IC216		AN79L09	IC	1	

Ref.No.		Part No.	Part Name & Description	Pcs	Remarks
IC501		TL082CPS	IC	1	
IC502,03		CA3054	IC	2	
IC504,05		NJM1496M	IC	2	
IC506		10116D	IC	1	
IC507		MC74HC04AF	IC	1	
IC508		NJM1496M	IC	1	
IC509		MC74HC00AF	IC	1	
IC510		MC74HC74AF	IC	1	
IC511		SN74LS123NS	IC	1	
IC512		10116D	IC	1	
IC513		MC74HC00AF	IC	1	
IC514		MC74HC74AF	IC	1	
IC517		AN78N09	IC	1	
IC518		AN79N09	IC	1	
IC519		AN78N05	IC	1	
IC520		AN79N05	IC	1	
IC521		AN78N09	IC	1	
IC522		AN79N09	IC	1	
IC523		MC74HC04AF	IC	1	
IC800		NE521D	IC	1	
IC801		MC74HC126AF	IC	1	
IC802,03		MC10125L	IC	2	
IC804		MN53010VYD	IC	1	
IC805		UPC311G	IC	1	
IC806		MC74HC126AF	IC	1	
IC807-14		TL082CPS	IC	8	
IC815-17		MC74HC4053F	IC	3	
IC818		AN78N09	IC	1	
IC819		AN79N09	IC	1	
IC820		AN78N05	IC	1	
IC821		AN79N05	IC	1	
L1-L3		VLP0017	COIL	3	
L5		VLQEL05S821J	COIL 820UH	1	
L6-L9		VLP0017	COIL	4	
L10		VLQEL05S221J	COIL 220UH	1	
L12		VLQEL05S5R6J	COIL 5.6UH	1	
L13		VLQEL05S390J	COIL 39UH	1	
L14		VLQEL05S100J	COIL 10UH	1	
L15		VLQEL05S5R6J	COIL 5.6UH	1	
L17		VLQEL05S5R6J	COIL 5.6UH	1	
L18		VLQEL05S390J	COIL 39UH	1	
L19		VLQEL05S100J	COIL 10UH	1	
L20		VLQEL05S5R6J	COIL 5.6UH	1	
L200		VLQEL05S6R8J	COIL 6.8UH	1	
L201		VLQEL05S151J	COIL 150UH	1	
L203		VLQEL05S151J	COIL 150UH	1	
L205,06		VLP0017	COIL	2	
L208,09		VLQEL05S6R8J	COIL 6.8UH	2	
L210		VLQEL05S101J	COIL 100UH	1	
L211,12		VLQEL05S6R8J	COIL 6.8UH	2	
L501,02		VLQEL05S101K	COIL 100UH	2	
L503		VLQEL05S6R8J	COIL 6.8UH	1	
L505		VLQEL05S101K	COIL 100UH	1	
L506		VLQEL05S680J	COIL 68UH	1	
L507,08		VLQEL05S101K	COIL 100UH	2	
L511		VLQEL05S150J	COIL 15UH	1	
L512		VLQEL05S5R6J	COIL 5.6UH	1	
L513		VLQEL05S6R8J	COIL 6.8UH	1	
L514		VLQEL05S180J	COIL 18UH	1	
L515		VLQEL05S560J	COIL 56UH	1	
L518,19		VLQEL05S101K	COIL 100UH	2	
L520,21		VLQEL05S470J	COIL 47UH	2	
L522,23		VLP0017	COIL	2	
L801		VLQEL05S8R2J	COIL 8.2UH	1	
Q1		2SD601-R	TRANSISTOR CHIP	1	(Q,R)
Q2		2SB709-R	TRANSISTOR CHIP	1	(Q,R)
Q3		2SD601-R	TRANSISTOR CHIP	1	(Q,R)
Q4,Q5		2SB709-R	TRANSISTOR CHIP	2	(Q,R)
Q6,Q7		2SC2404-C	TRANSISTOR CHIP	2	(C,D)

Ref.No.		Part No.	Part Name & Description	Pcs	Remarks
Q8		2SA1022-B	TRANSISTOR CHIP	1	(B,C)
Q9		2SC2295-B	TRANSISTOR CHIP	1	(B,C)
Q10		2SA1022-B	TRANSISTOR CHIP	1	(B,C)
Q11		2SK374-R	TRANSISTOR	1	(Q,R)
Q12		2SB709-R	TRANSISTOR CHIP	1	(Q,R)
Q13		2SD601-R	TRANSISTOR CHIP	1	(Q,R)
Q14		2SB709-R	TRANSISTOR CHIP	1	(Q,R)
Q15		2SD601-R	TRANSISTOR CHIP	1	(Q,R)
Q16		2SB709-R	TRANSISTOR CHIP	1	(Q,R)
Q17,18		2SC2404-C	TRANSISTOR CHIP	2	(C,D)
Q19		2SA1022-B	TRANSISTOR CHIP	1	(B,C)
Q20		2SC2295-B	TRANSISTOR CHIP	1	(B,C)
Q21		2SA1022-B	TRANSISTOR CHIP	1	(B,C)
Q22		2SK374-R	TRANSISTOR	1	(Q,R)
Q23		2SB709-R	TRANSISTOR CHIP	1	(Q,R)
Q24		2SD601-R	TRANSISTOR CHIP	1	(Q,R)
Q25		2SA1022-B	TRANSISTOR CHIP	1	(B,C)
Q26-28		2SD601-R	TRANSISTOR CHIP	3	(Q,R)
Q200		2SD601-R	TRANSISTOR CHIP	1	(Q,R)
Q201,02		2SB709-R	TRANSISTOR CHIP	2	(Q,R)
Q203,04		2SD601-R	TRANSISTOR CHIP	2	(Q,R)
Q205,06		2SC2404-C	TRANSISTOR CHIP	2	(C,D)
Q207		2SA1022-B	TRANSISTOR CHIP	1	(B,C)
Q208		2SC2295-B	TRANSISTOR CHIP	1	(B,C)
Q209		2SD601-R	TRANSISTOR CHIP	1	(Q,R)
Q210		2SK198	TRANSISTOR	1	(Q,R)
Q211-15		2SD601-R	TRANSISTOR CHIP	5	(Q,R)
Q219		2SD601-R	TRANSISTOR CHIP	1	(Q,R)
Q220,21		2SB709-R	TRANSISTOR CHIP	2	(Q,R)
Q222		2SD601-R	TRANSISTOR CHIP	1	(Q,R)
Q223,24		2SC2404-C	TRANSISTOR CHIP	2	(C,D)
Q225		2SA1022-B	TRANSISTOR CHIP	1	(B,C)
Q226		2SC2295-B	TRANSISTOR CHIP	1	(B,C)
Q227		2SD601-R	TRANSISTOR CHIP	1	(Q,R)
Q229		2SB709-R	TRANSISTOR CHIP	1	(Q,R)
Q230		2SD601-R	TRANSISTOR CHIP	1	(Q,R)
Q232,33		2SB709-R	TRANSISTOR CHIP	2	(Q,R)
Q234		2SD601-R	TRANSISTOR CHIP	1	(Q,R)
Q235,36		2SC2404-C	TRANSISTOR CHIP	2	(C,D)
Q237		2SK198	TRANSISTOR	1	(Q,R)
Q238,39		2SB709-R	TRANSISTOR CHIP	2	(Q,R)
Q240		2SD601-R	TRANSISTOR CHIP	1	(Q,R)
Q241,42		2SC2404-C	TRANSISTOR CHIP	2	(C,D)
Q243		2SA1022-B	TRANSISTOR CHIP	1	(B,C)
Q244		2SC2295-B	TRANSISTOR CHIP	1	(B,C)
Q245		2SD601-R	TRANSISTOR CHIP	1	(Q,R)
Q246		2SK198	TRANSISTOR	1	(Q,R)
Q247		2SB709-R	TRANSISTOR CHIP	1	(Q,R)
Q248,49		2SD601-R	TRANSISTOR CHIP	2	(Q,R)
Q250,51		2SB709-R	TRANSISTOR CHIP	2	(Q,R)
Q252		2SD601-R	TRANSISTOR CHIP	1	(Q,R)
Q253,54		2SC2404-C	TRANSISTOR CHIP	2	(C,D)
Q255		2SK198	TRANSISTOR	1	(Q,R)
Q256		2SC2404-C	TRANSISTOR CHIP	1	(C,D)
Q257		2SB709-R	TRANSISTOR CHIP	1	(Q,R)
Q258		2SA1022-B	TRANSISTOR CHIP	1	(B,C)
Q259-63		2SC2295-B	TRANSISTOR CHIP	5	(B,C)
Q265		2SC2295-B	TRANSISTOR CHIP	1	(B,C)
Q266,67		2SD601-R	TRANSISTOR CHIP	2	(Q,R)
Q284		2SK198	TRANSISTOR	1	(Q,R)
Q285		2SC2295-B	TRANSISTOR CHIP	1	(B,C)
Q286,87		2SD601-R	TRANSISTOR CHIP	2	(Q,R)
Q288,89		2SB709-R	TRANSISTOR CHIP	2	(Q,R)
Q290		2SD601-R	TRANSISTOR CHIP	1	(Q,R)
Q291,92		2SB709-R	TRANSISTOR CHIP	2	(Q,R)
Q501,02		2SC2295-B	TRANSISTOR CHIP	2	(B,C)
Q503,04		2SD601-R	TRANSISTOR CHIP	2	(Q,R)
Q505		2SK198	TRANSISTOR	1	(Q,R)
Q506		2SB709-R	TRANSISTOR CHIP	1	(Q,R)
Q507-09		2SD601-R	TRANSISTOR CHIP	3	(Q,R)
Q514-16		2SD601-R	TRANSISTOR CHIP	3	(Q,R)
Q518		2SD601-R	TRANSISTOR CHIP	1	(Q,R)
Q519		2SC2295-B	TRANSISTOR CHIP	1	(B,C)
Q520		2SD601-R	TRANSISTOR CHIP	1	(Q,R)
Q521,22		2SC2295-B	TRANSISTOR CHIP	2	(B,C)

Ref.No.		Part No.	Part Name & Description	Pcs	Remarks
Q523		2SD601-R	TRANSISTOR CHIP	1	(Q,R)
Q524,25		2SB709-R	TRANSISTOR CHIP	2	(Q,R)
Q526,27		2SC2295-B	TRANSISTOR CHIP	2	(B,C)
Q528		2SD601-R	TRANSISTOR CHIP	1	(Q,R)
Q532		2SB709-R	TRANSISTOR CHIP	1	(Q,R)
Q533-37		2SD601-R	TRANSISTOR CHIP	5	(Q,R)
Q538		2SB709-R	TRANSISTOR CHIP	1	(Q,R)
Q539		2SD601-R	TRANSISTOR CHIP	1	(Q,R)
Q540		2SB709-R	TRANSISTOR CHIP	1	(Q,R)
Q541		2SD601-R	TRANSISTOR CHIP	1	(Q,R)
Q542		2SB709-R	TRANSISTOR CHIP	1	(Q,R)
Q543		2SD601-R	TRANSISTOR CHIP	1	(Q,R)
Q544		2SB709-R	TRANSISTOR CHIP	1	(Q,R)
Q545-52		2SD601-R	TRANSISTOR CHIP	8	(Q,R)
Q800		2SC2295-B	TRANSISTOR CHIP	1	(B,C)
Q801		2SD601-R	TRANSISTOR CHIP	1	(Q,R)
Q802		2SB709-R	TRANSISTOR CHIP	1	(Q,R)
Q803		2SC2295-B	TRANSISTOR CHIP	1	(B,C)
Q804		2SB709-R	TRANSISTOR CHIP	1	(Q,R)
Q805		2SC2295-B	TRANSISTOR CHIP	1	(B,C)
Q807		2SD601-R	TRANSISTOR CHIP	1	(Q,R)
Q808-15		2SC2295-B	TRANSISTOR CHIP	8	(B,C)
Q816,17		2SB709-R	TRANSISTOR CHIP	2	(Q,R)
Q818,19		2SC2295-B	TRANSISTOR CHIP	2	(B,C)
Q826		ECUM1E104ZFN	C.CAPACITOR CH 25V 0.1U	1	
Q833		ECUM1E104ZFN	C.CAPACITOR CH 25V 0.1U	1	
			RESISTORS		
R1		ERJ6GEYG222	M.RESISTOR CH 1/10W 2.2K	1	
R2,R3		ERJ6GEYG220	M.RESISTOR CH 1/10W 22	2	
R4,R5		ERJ6GEYG152	M.RESISTOR CH 1/10W 1.5K	2	
R6,R7		VRE0034E561	M.RESISTOR CH 1/10W 560	2	
R8		ERJ6GEYG150	M.RESISTOR CH 1/10W 15	1	
R9		ERJ6GEYG473	M.RESISTOR CH 1/10W 47K	1	
R10		VRE0034E301	M.RESISTOR CH 1/10W 300	1	
R11		ERJ6GEYG220	M.RESISTOR CH 1/10W 22	1	
R12		ERJ6GEYG122	M.RESISTOR CH 1/10W 1.2K	1	
R13		VRE0034E221	M.RESISTOR CH 1/10W 220	1	
R14		VRE0034E121	M.RESISTOR CH 1/10W 120	1	
R15		VRE0034E301	M.RESISTOR CH 1/10W 300	1	
R16		ERJ6GEYG683	M.RESISTOR CH 1/10W 68K	1	
R17		ERJ6GEYG332	M.RESISTOR CH 1/10W 3.3K	1	
R18		ERJ6GEYG151	M.RESISTOR CH 1/10W 150	1	
R19		ERJ6GEYG101	M.RESISTOR CH 1/10W 100	1	
R20		ERJ6GEYG472	M.RESISTOR CH 1/10W 4.7K	1	
R21		ERJ6GEYG183	M.RESISTOR CH 1/10W 18K	1	
R22		ERJ6GEYG821	M.RESISTOR CH 1/10W 820	1	
R23,24		ERJ6GEYG102	M.RESISTOR CH 1/10W 1K	2	
R25,26		ERJ6GEYG101	M.RESISTOR CH 1/10W 100	2	
R27		ERJ6GEYG122	M.RESISTOR CH 1/10W 1.2K	1	
R28		ERJ6GEYG471	M.RESISTOR CH 1/10W 470	1	
R29		ERJ6GEYG222	M.RESISTOR CH 1/10W 2.2K	1	
R30		ERJ6GEYG272	M.RESISTOR CH 1/10W 2.7K	1	
R31		VRE0034E333	M.RESISTOR CH 1/10W 33K	1	
R32		VRE0034E103	M.RESISTOR CH 1/10W 10K	1	
R33		ERJ6GEYG222	M.RESISTOR CH 1/10W 2.2K	1	
R34		ERJ6GEYG223	M.RESISTOR CH 1/10W 22K	1	
R35		ERJ6GEYG562	M.RESISTOR CH 1/10W 5.6K	1	
R36,37		ERJ6GEYG332	M.RESISTOR CH 1/10W 3.3K	2	
R38		ERJ6GEYG823	M.RESISTOR CH 1/10W 82K	1	
R39		ERJ6GEYG332	M.RESISTOR CH 1/10W 3.3K	1	
R40		ERJ6GEYG222	M.RESISTOR CH 1/10W 2.2K	1	
R41		ERJ6GEYG563	M.RESISTOR CH 1/10W 56K	1	
R42		ERJ6GEYG333	M.RESISTOR CH 1/10W 33K	1	
R43		ERJ6GEYG332	M.RESISTOR CH 1/10W 3.3K	1	
R44		ERJ6GEYG272	M.RESISTOR CH 1/10W 2.7K	1	
R45		ERJ6GEYG273	M.RESISTOR CH 1/10W 27K	1	
R46		ERJ6GEYG224	M.RESISTOR CH 1/10W 220K	1	
R47		ERJ6GEYG472	M.RESISTOR CH 1/10W 4.7K	1	
R48		ERJ6GEYG272	M.RESISTOR CH 1/10W 2.7K	1	
R49		ERJ6GEYG221	M.RESISTOR CH 1/10W 220	1	
R50		ERJ6GEYG391	M.RESISTOR CH 1/10W 390	1	
R51		VRE0034E273	M.RESISTOR CH 1/10W 27K	1	

Ref.No.		Part No.	Part Name & Description	Pcs	Remarks
R52		VRE0034E203	M.RESISTOR CH 1/10W 20K	1	
R53		VRE0034E153	M.RESISTOR CH 1/10W 15K	1	
R54		ERJ6GEYG220	M.RESISTOR CH 1/10W 22	1	
R55		ERJ6GEYG222	M.RESISTOR CH 1/10W 2.2K	1	
R56		ERJ6GEYG332	M.RESISTOR CH 1/10W 3.3K	1	
R57		ERJ6GEYG222	M.RESISTOR CH 1/10W 2.2K	1	
R58,59		ERJ6GEYG220	M.RESISTOR CH 1/10W 22	2	
R60,61		ERJ6GEYG152	M.RESISTOR CH 1/10W 1.5K	2	
R62,63		VRE0034E561	M.RESISTOR CH 1/10W 560	2	
R64		ERJ6GEYG150	M.RESISTOR CH 1/10W 15	1	
R65		VRE0034E301	M.RESISTOR CH 1/10W 300	1	
R66		ERJ6GEYG220	M.RESISTOR CH 1/10W 22	1	
R67		ERJ6GEYG222	M.RESISTOR CH 1/10W 2.2K	1	
R68		ERJ6GEYG102	M.RESISTOR CH 1/10W 1K	1	
R69		ERJ6GEYG471	M.RESISTOR CH 1/10W 470	1	
R70		ERJ6GEYG122	M.RESISTOR CH 1/10W 1.2K	1	
R71		ERJ6GEYG101	M.RESISTOR CH 1/10W 100	1	
R72		ERJ6GEYG472	M.RESISTOR CH 1/10W 4.7K	1	
R73		ERJ6GEYG183	M.RESISTOR CH 1/10W 18K	1	
R74		ERJ6GEYG102	M.RESISTOR CH 1/10W 1K	1	
R75		ERJ6GEYG101	M.RESISTOR CH 1/10W 100	1	
R76		ERJ6GEYG102	M.RESISTOR CH 1/10W 1K	1	
R77		ERJ6GEYG101	M.RESISTOR CH 1/10W 100	1	
R78		ERJ6GEYG122	M.RESISTOR CH 1/10W 1.2K	1	
R79		ERJ6GEYG471	M.RESISTOR CH 1/10W 470	1	
R80		ERJ6GEYG222	M.RESISTOR CH 1/10W 2.2K	1	
R81		ERJ6GEYG272	M.RESISTOR CH 1/10W 2.7K	1	
R82		ERJ6GEYG223	M.RESISTOR CH 1/10W 22K	1	
R83		ERJ6GEYG222	M.RESISTOR CH 1/10W 2.2K	1	
R84		ERJ6GEYG220	M.RESISTOR CH 1/10W 22	1	
R85		ERJ6GEYG562	M.RESISTOR CH 1/10W 5.6K	1	
R86,87		ERJ6GEYG332	M.RESISTOR CH 1/10W 3.3K	2	
R88		ERJ6GEYG823	M.RESISTOR CH 1/10W 82K	1	
R89		ERJ6GEYG332	M.RESISTOR CH 1/10W 3.3K	1	
R90		ERJ6GEYG222	M.RESISTOR CH 1/10W 2.2K	1	
R91		ERJ6GEYG563	M.RESISTOR CH 1/10W 56K	1	
R92		ERJ6GEYG333	M.RESISTOR CH 1/10W 33K	1	
R93		ERJ6GEYG332	M.RESISTOR CH 1/10W 3.3K	1	
R94		ERJ6GEYG273	M.RESISTOR CH 1/10W 27K	1	
R95		ERJ6GEYG272	M.RESISTOR CH 1/10W 2.7K	1	
R96		ERJ6GEYG472	M.RESISTOR CH 1/10W 4.7K	1	
R97		ERJ6GEYG224	M.RESISTOR CH 1/10W 220K	1	
R98		ERJ6GEYG272	M.RESISTOR CH 1/10W 2.7K	1	
R99		ERJ6GEYG221	M.RESISTOR CH 1/10W 220	1	
R100		ERJ6GEYG222	M.RESISTOR CH 1/10W 2.2K	1	
R101		ERJ6GEYG332	M.RESISTOR CH 1/10W 3.3K	1	
R102		ERJ6GEYG272	M.RESISTOR CH 1/10W 2.7K	1	
R103		VRE0034E223	M.RESISTOR CH 1/10W 22K	1	
R104		VRE0034E153	M.RESISTOR CH 1/10W 15K	1	
R105		ERJ6GEYG272	M.RESISTOR CH 1/10W 2.7K	1	
R109,10		ERJ6GEY0R00	M.RESISTOR CH 1/10W 0	2	
R133		ERJ6GEYG224	M.RESISTOR CH 1/10W 220K	1	
R135,36		ERJ6GEYG822	M.RESISTOR CH 1/10W 8.2K	2	
R137		ERJ6GEYG222	M.RESISTOR CH 1/10W 2.2K	1	
R138		ERJ6GEYG102	M.RESISTOR CH 1/10W 1K	1	
R139		ERJ6GEYG222	M.RESISTOR CH 1/10W 2.2K	1	
R140		ERJ6GEYG104	M.RESISTOR CH 1/10W 100K	1	
R141		ERJ6GEYG470	M.RESISTOR CH 1/10W 47	1	
R142		ERJ6GEYG681	M.RESISTOR CH 1/10W 680	1	
R143,44		ERJ6GEYG301	M.RESISTOR CH 1/10W 300	2	
R145		ERJ6GEYG223	M.RESISTOR CH 1/10W 22K	1	
R146		ERJ6GEYG105	M.RESISTOR CH 1/10W 1M	1	
R148,49		ERJ6GEYG103	M.RESISTOR CH 1/10W 10K	2	
R150		ERJ6GEYG104	M.RESISTOR CH 1/10W 100K	1	
R151		ERJ6GEYG102	M.RESISTOR CH 1/10W 1K	1	
R152		ERJ6GEYG222	M.RESISTOR CH 1/10W 2.2K	1	
R153		ERJ6GEYG333	M.RESISTOR CH 1/10W 33K	1	
R154		ERJ6GEYG104	M.RESISTOR CH 1/10W 100K	1	
R155		ERJ6GEYG332	M.RESISTOR CH 1/10W 3.3K	1	
R156		ERJ6GEYG472	M.RESISTOR CH 1/10W 4.7K	1	
R157		ERJ6GEYG103	M.RESISTOR CH 1/10W 10K	1	
R158		ERJ6GEYG221	M.RESISTOR CH 1/10W 220	1	
R159		ERJ6GEYG681	M.RESISTOR CH 1/10W 680	1	
R160,61		ERJ6GEYG301	M.RESISTOR CH 1/10W 300	2	
R162,63		ERJ6GEYG103	M.RESISTOR CH 1/10W 10K	2	

Ref.No.		Part No.	Part Name & Description	Pcs	Remarks
R164,65		ERJ6GEY0R00	M.RESISTOR CH 1/10W 0	2	
R166,67		ERJ6GEYG102	M.RESISTOR CH 1/10W 1K	2	
R168		ERJ6GEYG470	M.RESISTOR CH 1/10W 47	1	
R169,70		ERJ6GEYG272	M.RESISTOR CH 1/10W 2.7K	2	
R171		ERJ6GEYG102	M.RESISTOR CH 1/10W 1K	1	
R172		ERJ6GEYG272	M.RESISTOR CH 1/10W 2.7K	1	
R173		ERJ6GEYG470	M.RESISTOR CH 1/10W 47	1	
R174		ERJ6GEYJ471	M.RESISTOR CH 1/10W 470	1	
R175		ERJ6GEY0R00	M.RESISTOR CH 1/10W 0	1	
R176		ERDS2TJ101	C.RESISTOR 1/4W 100	1	
R179		ERDS2TJ681	C.RESISTOR 1/4W 680	1	
R200		ERJ6GEYG272	M.RESISTOR CH 1/10W 2.7K	1	
R201		ERJ6GEYG222	M.RESISTOR CH 1/10W 2.2K	1	
R202,03		VRE0034E331	M.RESISTOR CH 1/10W 330	2	
R204		ERJ6GEYG470	M.RESISTOR CH 1/10W 47	1	
R205		ERJ6GEYG272	M.RESISTOR CH 1/10W 2.7K	1	
R206,07		VRE0034E102	M.RESISTOR CH 1/10W 1K	2	
R209		VRE0034E621	M.RESISTOR CH 1/10W 620	1	
R210,11		ERJ6GEYG272	M.RESISTOR CH 1/10W 2.7K	2	
R212		ERJ6GEYG102	M.RESISTOR CH 1/10W 1K	1	
R213		ERJ6GEYG221	M.RESISTOR CH 1/10W 220	1	
R214		ERJ6GEYG681	M.RESISTOR CH 1/10W 680	1	
R215		ERJ6GEYG101	M.RESISTOR CH 1/10W 100	1	
R216		ERJ6GEYG102	M.RESISTOR CH 1/10W 1K	1	
R217		ERJ6GEYG101	M.RESISTOR CH 1/10W 100	1	
R218		ERJ6GEYG102	M.RESISTOR CH 1/10W 1K	1	
R219		ERJ6GEYG152	M.RESISTOR CH 1/10W 1.5K	1	
R220		ERJ6GEYG222	M.RESISTOR CH 1/10W 2.2K	1	
R221		ERJ6GEYG471	M.RESISTOR CH 1/10W 470	1	
R222,23		ERJ6GEYG222	M.RESISTOR CH 1/10W 2.2K	2	
R224		ERJ6GEYG101	M.RESISTOR CH 1/10W 100	1	
R225		ERJ6GEYG683	M.RESISTOR CH 1/10W 68K	1	
R226		ERJ6GEYG272	M.RESISTOR CH 1/10W 2.7K	1	
R227		ERJ6GEYG222	M.RESISTOR CH 1/10W 2.2K	1	
R228		ERJ6GEYG103	M.RESISTOR CH 1/10W 10K	1	
R229		ERJ6GEYG102	M.RESISTOR CH 1/10W 1K	1	
R230		ERJ6GEYG222	M.RESISTOR CH 1/10W 2.2K	1	
R231		ERJ6GEYG470	M.RESISTOR CH 1/10W 47	1	
R233		ERJ6GEYG102	M.RESISTOR CH 1/10W 1K	1	
R234		ERJ6GEYG681	M.RESISTOR CH 1/10W 680	1	
R235		ERJ6GEYG561	M.RESISTOR CH 1/10W 560	1	
R236		ERJ6GEYG121	M.RESISTOR CH 1/10W 120	1	
R237		ERJ6GEYG391	M.RESISTOR CH 1/10W 390	1	
R238		ERJ6GEYG223	M.RESISTOR CH 1/10W 22K	1	
R240		ERJ6GEYG182	M.RESISTOR CH 1/10W 1.8K	1	
R241		ERJ6GEYG273	M.RESISTOR CH 1/10W 27K	1	
R242		ERJ6GEYG470	M.RESISTOR CH 1/10W 47	1	
R243		ERJ6GEYG182	M.RESISTOR CH 1/10W 1.8K	1	
R244		VRE0034E151	M.RESISTOR CH 1/10W 150	1	
R245		ERJ6GEYG152	M.RESISTOR CH 1/10W 1.5K	1	
R246		ERJ6GEYG331	M.RESISTOR CH 1/10W 330	1	
R257		VRE0034E331	M.RESISTOR CH 1/10W 330	1	
R258-60		VRE0034E301	M.RESISTOR CH 1/10W 300	3	
R262,63		VRE0034E102	M.RESISTOR CH 1/10W 1K	2	
R264		VRE0034E821	M.RESISTOR CH 1/10W 820	1	
R265,66		VRE0034E102	M.RESISTOR CH 1/10W 1K	2	
R268		ERJ6GEY0R00	M.RESISTOR CH 1/10W 0	1	
R269		ERJ6GEYG272	M.RESISTOR CH 1/10W 2.7K	1	
R270		ERJ6GEYG471	M.RESISTOR CH 1/10W 470	1	
R271		ERJ6GEYG331	M.RESISTOR CH 1/10W 330	1	
R272		ERJ6GEYG152	M.RESISTOR CH 1/10W 1.5K	1	
R273		ERJ6GEYG102	M.RESISTOR CH 1/10W 1K	1	
R274		ERJ6GEYG101	M.RESISTOR CH 1/10W 100	1	
R275		ERJ6GEYG102	M.RESISTOR CH 1/10W 1K	1	
R276		ERJ6GEYG101	M.RESISTOR CH 1/10W 100	1	
R277		ERJ6GEYG152	M.RESISTOR CH 1/10W 1.5K	1	
R278		ERJ6GEYG471	M.RESISTOR CH 1/10W 470	1	
R279		ERJ6GEYG222	M.RESISTOR CH 1/10W 2.2K	1	
R280		ERJ6GEYG152	M.RESISTOR CH 1/10W 1.5K	1	
R281		ERJ6GEYG222	M.RESISTOR CH 1/10W 2.2K	1	
R282		ERJ6GEYG101	M.RESISTOR CH 1/10W 100	1	
R283		ERJ6GEYG272	M.RESISTOR CH 1/10W 2.7K	1	
R285,86		ERJ6GEYG103	M.RESISTOR CH 1/10W 10K	2	
R288		ERJ6GEYG102	M.RESISTOR CH 1/10W 1K	1	
R290		ERJ6GEYG470	M.RESISTOR CH 1/10W 47	1	

Ref.No.		Part No.	Part Name & Description	Pcs	Remarks
R291		ERJ6GEYG222	M.RESISTOR CH 1/10W 2.2K	1	
R292		ERJ6GEYG102	M.RESISTOR CH 1/10W 1K	1	
R293		ERJ6GEYG152	M.RESISTOR CH 1/10W 1.5K	1	
R294		ERJ6GEYG470	M.RESISTOR CH 1/10W 47	1	
R298		ERJ6GEYG470	M.RESISTOR CH 1/10W 47	1	
R299		ERJ6GEYG272	M.RESISTOR CH 1/10W 2.7K	1	
R300,01		VRE0034E102	M.RESISTOR CH 1/10W 1K	2	
R302		ERJ6GEY0R00	M.RESISTOR CH 1/10W 0	1	
R303		ERJ6GEYG272	M.RESISTOR CH 1/10W 2.7K	1	
R306		ERJ6GEYG683	M.RESISTOR CH 1/10W 68K	1	
R307		ERJ6GEYG821	M.RESISTOR CH 1/10W 820	1	
R308		ERJ6GEYG273	M.RESISTOR CH 1/10W 27K	1	
R309		ERJ6GEYG272	M.RESISTOR CH 1/10W 2.7K	1	
R310		ERJ6GEYG682	M.REISITOR CH 1/10W 6.8K	1	
R311		ERJ6GEYG272	M.RESISTOR CH 1/10W 2.7K	1	
R312		ERJ6GEYG222	M.RESISTOR CH 1/10W 2.2K	1	
R313		ERJ6GEYG101	M.RESISTOR CH 1/10W 100	1	
R314		ERJ6GEYG683	M.RESISTOR CH 1/10W 68K	1	
R316-18		VRE0034E301	M.RESISTOR CH 1/10W 300	3	
R320,21		VRE0034E102	M.RESISTOR CH 1/10W 1K	2	
R322		VRE0034E821	M.RESISTOR CH 1/10W 820	1	
R323,24		VRE0034E102	M.RESISTOR CH 1/10W 1K	2	
R326		ERJ6GEY0R00	M.RESISTOR CH 1/10W 0	1	
R327		ERJ6GEYG272	M.RESISTOR CH 1/10W 2.7K	1	
R328		ERJ6GEYG152	M.RESISTOR CH 1/10W 1.5K	1	
R329		ERJ6GEYG471	M.RESISTOR CH 1/10W 470	1	
R330		ERJ6GEYG331	M.RESISTOR CH 1/10W 330	1	
R331		ERJ6GEYG102	M.RESISTOR CH 1/10W 1K	1	
R332		ERJ6GEYG101	M.RESISTOR CH 1/10W 100	1	
R333		ERJ6GEYG102	M.RESISTOR CH 1/10W 1K	1	
R334		ERJ6GEYG101	M.RESISTOR CH 1/10W 100	1	
R335		ERJ6GEYG152	M.RESISTOR CH 1/10W 1.5K	1	
R336		ERJ6GEYG471	M.RESISTOR CH 1/10W 470	1	
R337		ERJ6GEYG222	M.RESISTOR CH 1/10W 2.2K	1	
R338,39		ERJ6GEYG152	M.RESISTOR CH 1/10W 1.5K	2	
R340		ERJ6GEYG101	M.RESISTOR CH 1/10W 100	1	
R341		ERJ6GEYG272	M.RESISTOR CH 1/10W 2.7K	1	
R342		ERJ6GEYG683	M.RESISTOR CH 1/10W 68K	1	
R344,45		ERJ6GEYG103	M.RESISTOR CH 1/10W 10K	2	
R346		ERJ6GEYG102	M.RESISTOR CH 1/10W 1K	1	
R347		ERJ6GEYG470	M.RESISTOR CH 1/10W 47	1	
R348		ERJ6GEYG222	M.RESISTOR CH 1/10W 2.2K	1	
R349		ERJ6GEYG470	M.RESISTOR CH 1/10W 47	1	
R350		ERJ6GEYG152	M.RESISTOR CH 1/10W 1.5K	1	
R351		ERJ6GEYG391	M.RESISTOR CH 1/10W 390	1	
R355		ERJ6GEYG470	M.RESISTOR CH 1/10W 47	1	
R356		ERJ6GEYG222	M.RESISTOR CH 1/10W 2.2K	1	
R357,58		VRE0034E102	M.RESISTOR CH 1/10W 1K	2	
R359		VRE0034E271	M.RESISTOR CH 1/10W 270	1	
R360		ERJ6GEYG272	M.RESISTOR CH 1/10W 2.7K	1	
R364		ERJ6GEYG391	M.RESISTOR CH 1/10W 390	1	
R365		ERJ6GEYG273	M.RESISTOR CH 1/10W 27K	1	
R366		ERJ6GEYG272	M.RESISTOR CH 1/10W 2.7K	1	
R367		ERJ6GEYG682	M.REISITOR CH 1/10W 6.8K	1	
R368		ERJ6GEYG272	M.RESISTOR CH 1/10W 2.7K	1	
R369		ERJ6GEYG222	M.RESISTOR CH 1/10W 2.2K	1	
R370		ERJ6GEYG101	M.RESISTOR CH 1/10W 100	1	
R371		ERJ6GEYG683	M.RESISTOR CH 1/10W 68K	1	
R372		ERJ6GEYG332	M.RESISTOR CH 1/10W 3.3K	1	
R373		ERJ6GEYG562	M.RESISTOR CH 1/10W 5.6K	1	
R374,75		ERJ6GEYG223	M.RESISTOR CH 1/10W 22K	2	
R376		ERJ6GEYG332	M.RESISTOR CH 1/10W 3.3K	1	
R396		ERJ6GEYG332	M.RESISTOR CH 1/10W 3.3K	1	
R397		ERJ6GEYG472	M.RESISTOR CH 1/10W 4.7K	1	
R398		ERJ6GEYG153	M.RESISTOR CH 1/10W 15K	1	
R399		ERJ6GEYG221	M.RESISTOR CH 1/10W 220	1	
R400		ERJ6GEYG472	M.RESISTOR CH 1/10W 4.7K	1	
R401,02		ERJ6GEYG102	M.RESISTOR CH 1/10W 1K	2	
R404		ERJ6GEYG102	M.RESISTOR CH 1/10W 1K	1	
R405,06		ERJ6GEYG221	M.RESISTOR CH 1/10W 220	2	
R409		VRE0034E391	M.RESISTOR CH 1/10W 390	1	
R410		ERJ6GEY0R00	M.RESISTOR CH 1/10W 0	1	
R411		ERJ6GEYG221	M.RESISTOR CH 1/10W 220	1	
R412		VRE0034E391	M.RESISTOR CH 1/10W 390	1	
R413-16		ERJ6GEYG223	M.RESISTOR CH 1/10W 22K	4	

Ref.No.		Part No.	Part Name & Description	Pcs	Remarks
R417		VRE0034E391	M.RESISTOR CH 1/10W 390	1	
R418		ERJ6GEYG151	M.RESISTOR CH 1/10W 150	1	
R421		ERJ6GEYG221	M.RESISTOR CH 1/10W 220	1	
R422		VRE0034E391	M.RESISTOR CH 1/10W 390	1	
R423		ERJ6GEY0R00	M.RESISTOR CH 1/10W 0	1	
R424		ERJ6GEYG101	M.RESISTOR CH 1/10W 100	1	
R425,26		ERJ6GEYG470	M.RESISTOR CH 1/10W 47	2	
R427		ERJ6GEYG221	M.RESISTOR CH 1/10W 220	1	
R428		VRE0034E391	M.RESISTOR CH 1/10W 390	1	
R429		ERJ6GEYG392	M.RESISTOR CH 1/10W 3.9K	1	
R430		ERJ6GEYG102	M.RESISTOR CH 1/10W 1K	1	
R431		VRE0034E821	M.RESISTOR CH 1/10W 820	1	
R432		ERJ6GEYG102	M.RESISTOR CH 1/10W 1K	1	
R433		ERJ6GEYG152	M.RESISTOR CH 1/10W 1.5K	1	
R434		ERJ6GEYG123	M.RESISTOR CH 1/10W 12K	1	
R435		ERJ6GEYG682	M.REISITOR CH 1/10W 6.8K	1	
R436		ERJ6GEYG822	M.RESISTOR CH 1/10W 8.2K	1	
R437		ERJ6GEYG123	M.RESISTOR CH 1/10W 12K	1	
R438		ERJ6GEYG152	M.RESISTOR CH 1/10W 1.5K	1	
R439		ERJ6GEYG102	M.RESISTOR CH 1/10W 1K	1	
R440		VRE0034E821	M.RESISTOR CH 1/10W 820	1	
R441		ERJ6GEYG102	M.RESISTOR CH 1/10W 1K	1	
R442		ERJ6GEYG222	M.RESISTOR CH 1/10W 2.2K	1	
R443		ERJ6GEY0R00	M.RESISTOR CH 1/10W 0	1	
R501		ERJ6GEYG102	M.RESISTOR CH 1/10W 1K	1	
R502		ERJ6GEYG330	M.RESISTOR CH 1/10W 33	1	
R503,04		ERJ6GEYG222	M.RESISTOR CH 1/10W 2.2K	2	
R505,06		ERJ6GEYG102	M.RESISTOR CH 1/10W 1K	2	
R507		ERJ6GEYG331	M.RESISTOR CH 1/10W 330	1	
R508		ERJ6GEYG221	M.RESISTOR CH 1/10W 220	1	
R509		ERJ6GEYG152	M.RESISTOR CH 1/10W 1.5K	1	
R510		ERJ6GEYG391	M.RESISTOR CH 1/10W 390	1	
R511		ERJ6GEYG102	M.RESISTOR CH 1/10W 1K	1	
R512		ERJ6GEYG152	M.RESISTOR CH 1/10W 1.5K	1	
R513		ERJ6GEYG683	M.RESISTOR CH 1/10W 68K	1	
R514		ERJ6GEYG182	M.RESISTOR CH 1/10W 1.8K	1	
R515		ERJ6GEYG101	M.RESISTOR CH 1/10W 100	1	
R516		ERJ6GEYG152	M.RESISTOR CH 1/10W 1.5K	1	
R517		ERJ6GEYG470	M.RESISTOR CH 1/10W 47	1	
R518		ERJ6GEYG273	M.RESISTOR CH 1/10W 27K	1	
R519		ERJ6GEYG331	M.RESISTOR CH 1/10W 330	1	
R520		ERJ6GEYG681	M.RESISTOR CH 1/10W 680	1	
R521		ERJ6GEYG391	M.RESISTOR CH 1/10W 390	1	
R522		ERJ6GEYG102	M.RESISTOR CH 1/10W 1K	1	
R523		ERJ6GEYG681	M.RESISTOR CH 1/10W 680	1	
R524		ERJ6GEYG561	M.RESISTOR CH 1/10W 560	1	
R525		ERJ6GEYG182	M.RESISTOR CH 1/10W 1.8K	1	
R526		ERJ6GEYG470	M.RESISTOR CH 1/10W 47	1	
R527		ERJ6GEYG182	M.RESISTOR CH 1/10W 1.8K	1	
R528		VRE0034E151	M.RESISTOR CH 1/10W 150	1	
R529		ERJ6GEYG152	M.RESISTOR CH 1/10W 1.5K	1	
R530		ERJ6GEYG470	M.RESISTOR CH 1/10W 47	1	
R542		ERJ6GEYG821	M.RESISTOR CH 1/10W 820	1	
R543		ERJ6GEYG392	M.RESISTOR CH 1/10W 3.9K	1	
R544		ERJ6GEYG561	M.RESISTOR CH 1/10W 560	1	
R545		ERJ6GEYG391	M.RESISTOR CH 1/10W 390	1	
R546		ERJ6GEYG561	M.RESISTOR CH 1/10W 560	1	
R547		ERJ6GEYG391	M.RESISTOR CH 1/10W 390	1	
R549		ERJ6GEYG273	M.RESISTOR CH 1/10W 27K	1	
R551		ERJ6GEYG391	M.RESISTOR CH 1/10W 390	1	
R552		ERJ6GEYG102	M.RESISTOR CH 1/10W 1K	1	
R553		ERJ6GEYG681	M.RESISTOR CH 1/10W 680	1	
R554		ERJ6GEYG561	M.RESISTOR CH 1/10W 560	1	
R555		ERJ6GEYG182	M.RESISTOR CH 1/10W 1.8K	1	
R556		ERJ6GEYG470	M.RESISTOR CH 1/10W 47	1	
R557		ERJ6GEYG182	M.RESISTOR CH 1/10W 1.8K	1	
R558		VRE0034E151	M.RESISTOR CH 1/10W 150	1	
R559		ERJ6GEYG152	M.RESISTOR CH 1/10W 1.5K	1	
R560		ERJ6GEYG470	M.RESISTOR CH 1/10W 47	1	
R564		ERJ6GEYG102	M.RESISTOR CH 1/10W 1K	1	
R565		ERJ6GEYG222	M.RESISTOR CH 1/10W 2.2K	1	
R566		ERJ6GEYG182	M.RESISTOR CH 1/10W 1.8K	1	
R567		ERJ6GEYG221	M.RESISTOR CH 1/10W 220	1	
R568		ERJ6GEYG470	M.RESISTOR CH 1/10W 47	1	
R569		ERJ6GEYG153	M.RESISTOR CH 1/10W 15K	1	

Ref.No.		Part No.	Part Name & Description	Pcs	Remarks
R570		ERJ6GEYG223	M.RESISTOR CH 1/10W 22K	1	
R571		ERJ6GEYG470	M.RESISTOR CH 1/10W 47	1	
R572		ERJ6GEYG472	M.RESISTOR CH 1/10W 4.7K	1	
R573,74		ERJ6GEYG102	M.RESISTOR CH 1/10W 1K	2	
R576		ERJ6GEYG103	M.RESISTOR CH 1/10W 10K	1	
R577		ERJ6GEYG102	M.RESISTOR CH 1/10W 1K	1	
R578		ERJ6GEYG472	M.RESISTOR CH 1/10W 4.7K	1	
R579,80		ERJ6GEYG121	M.RESISTOR CH 1/10W 120	2	
R581,82		ERJ6GEYG821	M.RESISTOR CH 1/10W 820	2	
R583		ERJ6GEYG470	M.RESISTOR CH 1/10W 47	1	
R584		ERJ6GEYG153	M.RESISTOR CH 1/10W 15K	1	
R585		ERJ6GEYG223	M.RESISTOR CH 1/10W 22K	1	
R586		ERJ6GEYG470	M.RESISTOR CH 1/10W 47	1	
R587		ERJ6GEYG472	M.RESISTOR CH 1/10W 4.7K	1	
R588		ERJ6GEYG102	M.RESISTOR CH 1/10W 1K	1	
R590		ERJ6GEYG103	M.RESISTOR CH 1/10W 10K	1	
R591		ERJ6GEYG102	M.RESISTOR CH 1/10W 1K	1	
R592		ERJ6GEYG472	M.RESISTOR CH 1/10W 4.7K	1	
R593,94		ERJ6GEYG121	M.RESISTOR CH 1/10W 120	2	
R595,96		ERJ6GEYG821	M.RESISTOR CH 1/10W 820	2	
R597		ERJ6GEYG102	M.RESISTOR CH 1/10W 1K	1	
R598		ERJ6GEYG103	M.RESISTOR CH 1/10W 10K	1	
R599		ERJ6GEYG822	M.RESISTOR CH 1/10W 8.2K	1	
R600		ERJ6GEYG102	M.RESISTOR CH 1/10W 1K	1	
R601,02		VRE0034E301	M.RESISTOR CH 1/10W 300	2	
R603		ERJ6GEYG152	M.RESISTOR CH 1/10W 1.5K	1	
R604		ERJ6GEYG151	M.RESISTOR CH 1/10W 150	1	
R605		ERJ6GEYG102	M.RESISTOR CH 1/10W 1K	1	
R606		ERJ6GEYG182	M.RESISTOR CH 1/10W 1.8K	1	
R607		ERJ6GEYG332	M.RESISTOR CH 1/10W 3.3K	1	
R608		ERJ6GEYG470	M.RESISTOR CH 1/10W 47	1	
R609,10		ERJ6GEYG122	M.RESISTOR CH 1/10W 1.2K	2	
R611		ERJ6GEY0R00	M.RESISTOR CH 1/10W 0	1	
R612		ERJ6GEYG272	M.RESISTOR CH 1/10W 2.7K	1	
R613		ERJ6GEYG182	M.RESISTOR CH 1/10W 1.8K	1	
R614		ERJ6GEYG392	M.RESISTOR CH 1/10W 3.9K	1	
R615		ERJ6GEYG151	M.RESISTOR CH 1/10W 150	1	
R616		ERJ6GEYG222	M.RESISTOR CH 1/10W 2.2K	1	
R617		ERJ6GEYG330	M.RESISTOR CH 1/10W 33	1	
R618		ERJ6GEYG222	M.RESISTOR CH 1/10W 2.2K	1	
R619		ERJ6GEYG102	M.RESISTOR CH 1/10W 1K	1	
R620		ERJ6GEYG181	M.RESISTOR CH 1/10W 180	1	
R621		ERJ6GEYG821	M.RESISTOR CH 1/10W 820	1	
R622		ERJ6GEYG152	M.RESISTOR CH 1/10W 1.5K	1	
R623		ERJ6GEYG470	M.RESISTOR CH 1/10W 47	1	
R630		ERJ6GEYG272	M.RESISTOR CH 1/10W 2.7K	1	
R633		ERJ6GEY0R00	M.RESISTOR CH 1/10W 0	1	
R634		ERJ6GEYG683	M.RESISTOR CH 1/10W 68K	1	
R635		ERJ6GEYG104	M.RESISTOR CH 1/10W 100K	1	
R636		ERJ6GEYG562	M.RESISTOR CH 1/10W 5.6K	1	
R637		ERJ6GEYG183	M.RESISTOR CH 1/10W 18K	1	
R642		ERJ6GEYG332	M.RESISTOR CH 1/10W 3.3K	1	
R643		ERJ6GEYG822	M.RESISTOR CH 1/10W 8.2K	1	
R644		ERJ6GEYG133	M.RESISTOR CH 1/10W 13K	1	
R645		ERJ6GEYG182	M.RESISTOR CH 1/10W 1.8K	1	
R646		ERJ6GEYG681	M.RESISTOR CH 1/10W 680	1	
R647		ERJ6GEYG471	M.RESISTOR CH 1/10W 470	1	
R648,49		ERJ6GEYG473	M.RESISTOR CH 1/10W 47K	2	
R650		ERJ6GEYG221	M.RESISTOR CH 1/10W 220	1	
R651		ERJ6GEYG682	M.REISITOR CH 1/10W 6.8K	1	
R652		ERJ6GEYG182	M.RESISTOR CH 1/10W 1.8K	1	
R653		ERJ6GEYG122	M.RESISTOR CH 1/10W 1.2K	1	
R654,55		ERJ6GEYG101	M.RESISTOR CH 1/10W 100	2	
R656		ERJ6GEYG122	M.RESISTOR CH 1/10W 1.2K	1	
R657		ERJ6GEYG182	M.RESISTOR CH 1/10W 1.8K	1	
R658		ERJ6GEYG102	M.RESISTOR CH 1/10W 1K	1	
R659		ERJ6GEYG681	M.RESISTOR CH 1/10W 680	1	
R660		ERJ6GEYG102	M.RESISTOR CH 1/10W 1K	1	
R661		ERJ6GEYG222	M.RESISTOR CH 1/10W 2.2K	1	
R662		ERJ6GEYG182	M.RESISTOR CH 1/10W 1.8K	1	
R663		ERJ6GEYG222	M.RESISTOR CH 1/10W 2.2K	1	
R664		ERJ6GEYG682	M.REISITOR CH 1/10W 6.8K	1	
R665		ERJ6GEYG122	M.RESISTOR CH 1/10W 1.2K	1	
R666		ERJ6GEYG102	M.RESISTOR CH 1/10W 1K	1	
R667		ERJ6GEYG182	M.RESISTOR CH 1/10W 1.8K	1	

Ref.No.		Part No.	Part Name & Description	Pcs	Remarks
R668		ERJ6GEYG102	M.RESISTOR CH 1/10W 1K	1	
R669		ERJ6GEYG681	M.RESISTOR CH 1/10W 680	1	
R670		ERJ6GEYG331	M.RESISTOR CH 1/10W 330	1	
R671		ERJ6GEYG152	M.RESISTOR CH 1/10W 1.5K	1	
R672,73		ERJ6GEYG102	M.RESISTOR CH 1/10W 1K	2	
R674		ERJ6GEYG561	M.RESISTOR CH 1/10W 560	1	
R675		ERJ6GEY0R00	M.RESISTOR CH 1/10W 0	1	
R676		ERJ6GEYG152	M.RESISTOR CH 1/10W 1.5K	1	
R677		ERJ6GEYG102	M.RESISTOR CH 1/10W 1K	1	
R678		ERJ6GEYG152	M.RESISTOR CH 1/10W 1.5K	1	
R679		ERJ6GEYG102	M.RESISTOR CH 1/10W 1K	1	
R680		ERJ6GEYG561	M.RESISTOR CH 1/10W 560	1	
R681		ERJ6GEYG330	M.RESISTOR CH 1/10W 33	1	
R682		ERJ6GEYG681	M.RESISTOR CH 1/10W 680	1	
R683		ERJ6GEYG124	M.RESISTOR CH 1/10W 120K	1	
R684		ERJ6GEYG152	M.RESISTOR CH 1/10W 1.5K	1	
R685		ERJ6GEYG102	M.RESISTOR CH 1/10W 1K	1	
R686		ERJ6GEYG181	M.RESISTOR CH 1/10W 180	1	
R687		ERJ6GEYG102	M.RESISTOR CH 1/10W 1K	1	
R688		ERJ6GEYG561	M.RESISTOR CH 1/10W 560	1	
R689		ERJ6GEYG152	M.RESISTOR CH 1/10W 1.5K	1	
R690,91		ERJ6GEYG122	M.RESISTOR CH 1/10W 1.2K	2	
R692,93		ERJ6GEYG470	M.RESISTOR CH 1/10W 47	2	
R694,95		ERJ6GEYG102	M.RESISTOR CH 1/10W 1K	2	
R696,97		ERJ6GEYG122	M.RESISTOR CH 1/10W 1.2K	2	
R698,99		ERJ6GEYG470	M.RESISTOR CH 1/10W 47	2	
R700,01		ERJ6GEYG102	M.RESISTOR CH 1/10W 1K	2	
R702		ERJ6GEYG103	M.RESISTOR CH 1/10W 10K	1	
R703		ERJ6GEYG472	M.RESISTOR CH 1/10W 4.7K	1	
R704-07		ERJ6GEYG102	M.RESISTOR CH 1/10W 1K	4	
R709		ERJ6GEY0R00	M.RESISTOR CH 1/10W 0	1	
R711		ERJ6GEY0R00	M.RESISTOR CH 1/10W 0	1	
R714,15		ERJ6GEY0R00	M.RESISTOR CH 1/10W 0	2	
R716		ERJ6GEYG101	M.RESISTOR CH 1/10W 100	1	
R717		ERJ6GEYG122	M.RESISTOR CH 1/10W 1.2K	1	
R718		ERJ6GEYG154	M.RESISTOR CH 1/10W 150K	1	
R719		ERJ6GEYG102	M.RESISTOR CH 1/10W 1K	1	
R720		ERJ6GEYG681	M.RESISTOR CH 1/10W 680	1	
R721		ERJ6GEYG470	M.RESISTOR CH 1/10W 47	1	
R722		ERJ6GEYG182	M.RESISTOR CH 1/10W 1.8K	1	
R723		VRE0034E151	M.RESISTOR CH 1/10W 150	1	
R724		ERJ6GEYG152	M.RESISTOR CH 1/10W 1.5K	1	
R725		ERJ6GEYG470	M.RESISTOR CH 1/10W 47	1	
R726		ERJ6GEYG472	M.RESISTOR CH 1/10W 4.7K	1	
R727		ERJ6GEYG103	M.RESISTOR CH 1/10W 10K	1	
R728		ERJ6GEYG561	M.RESISTOR CH 1/10W 560	1	
R729		ERJ6GEYG391	M.RESISTOR CH 1/10W 390	1	
R730		ERJ6GEYG561	M.RESISTOR CH 1/10W 560	1	
R731		ERJ6GEYG391	M.RESISTOR CH 1/10W 390	1	
R732		ERJ6GEYG561	M.RESISTOR CH 1/10W 560	1	
R733		ERJ6GEYG391	M.RESISTOR CH 1/10W 390	1	
R734		ERJ6GEYG561	M.RESISTOR CH 1/10W 560	1	
R735		ERJ6GEYG391	M.RESISTOR CH 1/10W 390	1	
R736		ERJ6GEYG101	M.RESISTOR CH 1/10W 100	1	
R737		ERJ6GEYG122	M.RESISTOR CH 1/10W 1.2K	1	
R739,40		ERJ6GEYG152	M.RESISTOR CH 1/10W 1.5K	2	
R741		ERJ6GEYG105	M.RESISTOR CH 1/10W 1M	1	
R742		ERJ6GEYG122	M.RESISTOR CH 1/10W 1.2K	1	
R743		ERJ6GEYG472	M.RESISTOR CH 1/10W 4.7K	1	
R744		ERJ6GEY0R00	M.RESISTOR CH 1/10W 0	1	
R800		ERJ6GEYG223	M.RESISTOR CH 1/10W 22K	1	
R801		ERJ6GEYG562	M.RESISTOR CH 1/10W 5.6K	1	
R802		ERJ6GEYG331	M.RESISTOR CH 1/10W 330	1	
R803		ERJ6GEYG103	M.RESISTOR CH 1/10W 10K	1	
R804		ERJ6GEYG183	M.RESISTOR CH 1/10W 18K	1	
R805		ERJ6GEYG102	M.RESISTOR CH 1/10W 1K	1	
R806		ERJ6GEYG472	M.RESISTOR CH 1/10W 4.7K	1	
R807		ERJ6GEYG152	M.RESISTOR CH 1/10W 1.5K	1	
R808-10		ERJ6GEYG122	M.RESISTOR CH 1/10W 1.2K	3	
R811		ERJ6GEYG222	M.RESISTOR CH 1/10W 2.2K	1	
R812-14		ERJ6GEYG122	M.RESISTOR CH 1/10W 1.2K	3	
R815		ERJ6GEYG222	M.RESISTOR CH 1/10W 2.2K	1	
R816		ERJ6GEYG122	M.RESISTOR CH 1/10W 1.2K	1	
R817		ERJ6GEYG392	M.RESISTOR CH 1/10W 3.9K	1	
R819,20		ERJ6GEYG103	M.RESISTOR CH 1/10W 10K	2	

Ref.No.		Part No.	Part Name & Description	Pcs	Remarks
R821		ERJ6GEYG392	M.RESISTOR CH 1/10W 3.9K	1	
R822,23		ERJ6GEYG103	M.RESISTOR CH 1/10W 10K	2	
R826		ERJ6GEYG153	M.RESISTOR CH 1/10W 15K	1	
R827		ERJ6GEYG392	M.RESISTOR CH 1/10W 3.9K	1	
R828		ERJ6GEYG562	M.RESISTOR CH 1/10W 5.6K	1	
R829		ERJ6GEYG103	M.RESISTOR CH 1/10W 10K	1	
R830		ERJ6GEYG122	M.RESISTOR CH 1/10W 1.2K	1	
R831		ERJ6GEYG222	M.RESISTOR CH 1/10W 2.2K	1	
R832		ERJ6GEYG392	M.RESISTOR CH 1/10W 3.9K	1	
R833		ERJ6GEYG122	M.RESISTOR CH 1/10W 1.2K	1	
R834		ERJ6GEYG182	M.RESISTOR CH 1/10W 1.8K	1	
R835		ERJ6GEYG392	M.RESISTOR CH 1/10W 3.9K	1	
R836		ERJ6GEYG682	M.REISITOR CH 1/10W 6.8K	1	
R837		ERJ6GEYG392	M.RESISTOR CH 1/10W 3.9K	1	
R838		ERJ6GEYG682	M.REISITOR CH 1/10W 6.8K	1	
R839,40		ERJ6GEYG392	M.RESISTOR CH 1/10W 3.9K	2	
R841		ERJ6GEYG682	M.REISITOR CH 1/10W 6.8K	1	
R842		ERJ6GEYG392	M.RESISTOR CH 1/10W 3.9K	1	
R843		ERJ6GEYG682	M.REISITOR CH 1/10W 6.8K	1	
R844-46		ERJ6GEYG392	M.RESISTOR CH 1/10W 3.9K	3	
R847		ERJ6GEY0R00	M.RESISTOR CH 1/10W 0	1	
R848		ERJ6GEYG102	M.RESISTOR CH 1/10W 1K	1	
R849		ERJ6GEY0R00	M.RESISTOR CH 1/10W 0	1	
R850		ERJ6GEYG102	M.RESISTOR CH 1/10W 1K	1	
R851		ERJ6GEY0R00	M.RESISTOR CH 1/10W 0	1	
R852		ERJ6GEYG102	M.RESISTOR CH 1/10W 1K	1	
R853		ERJ6GEY0R00	M.RESISTOR CH 1/10W 0	1	
R854		ERJ6GEYG102	M.RESISTOR CH 1/10W 1K	1	
R855		ERJ6GEY0R00	M.RESISTOR CH 1/10W 0	1	
R856		ERJ6GEYG102	M.RESISTOR CH 1/10W 1K	1	
R857		ERJ6GEY0R00	M.RESISTOR CH 1/10W 0	1	
R858		ERJ6GEYG102	M.RESISTOR CH 1/10W 1K	1	
R859-62		ERJ6GEY0R00	M.RESISTOR CH 1/10W 0	4	
R867		ERJ6GEYG104	M.RESISTOR CH 1/10W 100K	1	
R868		ERJ6GEYG562	M.RESISTOR CH 1/10W 5.6K	1	
R869		ERJ6GEYG273	M.RESISTOR CH 1/10W 27K	1	
R870		ERJ6GEYG472	M.RESISTOR CH 1/10W 4.7K	1	
R871		ERJ6GEYG562	M.RESISTOR CH 1/10W 5.6K	1	
R872		ERJ6GEYG273	M.RESISTOR CH 1/10W 27K	1	
R873		ERJ6GEY0R00	M.RESISTOR CH 1/10W 0	1	
R876		ERJ6GEY0R00	M.RESISTOR CH 1/10W 0	1	
R878		ERJ6GEY0R00	M.RESISTOR CH 1/10W 0	1	
R880		ERJ6GEY0R00	M.RESISTOR CH 1/10W 0	1	
R882		ERJ6GEY0R00	M.RESISTOR CH 1/10W 0	1	
R883,84		ERJ6GEYG103	M.RESISTOR CH 1/10W 10K	2	
R886,87		ERJ6GEY0R00	M.RESISTOR CH 1/10W 0	2	
R889,90		ERJ6GEYG392	M.RESISTOR CH 1/10W 3.9K	2	
R891		ERJ6GEYG563	M.RESISTOR CH 1/10W 56K	1	
R892		ERJ6GEYG472	M.RESISTOR CH 1/10W 4.7K	1	
R893		ERJ6GEYG272	M.RESISTOR CH 1/10W 2.7K	1	
R894		ERJ6GEYG102	M.RESISTOR CH 1/10W 1K	1	
R895		ERJ6GEYG103	M.RESISTOR CH 1/10W 10K	1	
R896		ERJ6GEYG122	M.RESISTOR CH 1/10W 1.2K	1	
R897		ERJ6GEYG222	M.RESISTOR CH 1/10W 2.2K	1	
R898,99		ERJ6GEYG273	M.RESISTOR CH 1/10W 27K	2	
R900		ERJ6GEYG332	M.RESISTOR CH 1/10W 3.3K	1	
R901-05		ERJ6GEYG103	M.RESISTOR CH 1/10W 10K	5	
R906		ERJ6GEYG224	M.RESISTOR CH 1/10W 220K	1	
R907-09		ERJ6GEYG103	M.RESISTOR CH 1/10W 10K	3	
R910		ERJ6GEYG152	M.RESISTOR CH 1/10W 1.5K	1	
R911		ERJ6GEYG392	M.RESISTOR CH 1/10W 3.9K	1	
R912-16		ERJ6GEYG103	M.RESISTOR CH 1/10W 10K	5	
R917		ERJ6GEYG562	M.RESISTOR CH 1/10W 5.6K	1	
R925,26		ERJ6GEYG122	M.RESISTOR CH 1/10W 1.2K	2	
R928		ERJ6GEYG562	M.RESISTOR CH 1/10W 5.6K	1	
R929,30		ERJ6GEYG392	M.RESISTOR CH 1/10W 3.9K	2	
R1001		ERJ6GEYG681	M.RESISTOR CH 1/10W 680	1	
R1002		ERJ6GEYG621	M.RESISTOR CH 1/10W 620	1	
SW201		VSS0207	SWITCH	1	
SW202,03		VJP1990	CONNECTOR	2	
SW800		VSS0126	SWITCH	1	
SW801		VJP1990	CONNECTOR	1	

Ref.No.		Part No.	Part Name & Description	Pcs	Remarks
SWS801		VJS1990	CONNECTOR	1	
TH501-04		ERTD2FGL102S	THERMISTOR 1K	4	
TP1-P4		VJR0646	TEST POINT	4	
TP6,P7		VJR0646	TEST POINT	2	
TP201-04		VJR0646	TEST POINT	4	
TP206		VJR0646	TEST POINT	1	
TP501-03		VJR0646	TEST POINT	3	
TP505-07		VJR0646	TEST POINT	3	
TP800-03		VJR0646	TEST POINT	4	
TP805		VJR0646	TEST POINT	1	
TPG1,G2		VJR0646	TEST POINT	2	
TPG201		VJR0646	TEST POINT	1	
TPG501		VJR0646	TEST POINT	1	
VC201		ECV1ZW20X60	V.CAPACITOR 20P	1	
VC501		ECV1ZW30X53	V.CAPACITOR 30P	1	
VR1		VRV0109B201	V.RESISTOR 200	1	
VR2		VRV0109B502	V.RESISTOR 5K	1	
VR3		VRV0109B501	V.RESISTOR 500	1	
VR4		VRV0109B502	V.RESISTOR 5K	1	
VR200		VRV0064B501	V.RESISTOR 500	1	
VR201		VRV0064B503	V.RESISTOR 50K	1	
VR202		VRV0064B103	V.RESISTOR 10K	1	
VR203		VRV0109B501	V.RESISTOR 500	1	
VR204		VRV0109B503	V.RESISTOR 50K	1	
VR205		VRV0109B501	V.RESISTOR 500	1	
VR206		VRV0109B503	V.RESISTOR 50K	1	
VR207		VRV0109B102	V.RESISTOR 1K	1	
VR208,09		VRV0109B501	V.RESISTOR 500	2	
VR210-13		VRV0109B102	V.RESISTOR 1K	4	
VR501		VRV0109B501	V.RESISTOR 500	1	
VR502		VRV0109B503	V.RESISTOR 50K	1	
VR503-06		VRV0064B503	V.RESISTOR 50K	4	
VR507		VRV0109B201	V.RESISTOR 200	1	
VR508		VRV0109B101	V.RESISTOR 100	1	
VR509		VRV0109B201	V.RESISTOR 200	1	
VR510		VRV0109B203	V.RESISTOR 20K	1	
VR511		VRV0109B502	V.RESISTOR 5K	1	
VR512		VRV0064B503	V.RESISTOR 50K	1	
VR513,14		VRV0109B102	V.RESISTOR 1K	2	
VR515,16		VRV0109B501	V.RESISTOR 500	2	
VR517		VRV0064B503	V.RESISTOR 50K	1	
VR800,01		VRV0109B202	V.RESISTOR 2K	1	
VR802,03		VRV0109B203	V.RESISTOR 20K	2	
			MISCELLANEOUS		
		VML2143	CARD PULLER	1	
		VML2144	CARD PULLER	1	
		VMZ1547	BARRIER	1	
		VXA3966	P.C.B. SHIELD	1	
		XNG26E	NUT	4	
		XYNV3+K6FR	SCREW	5	
		XYN26+C12	SCREW	4	

Ref.No.		Part No.	Part Name & Description	Pcs	Remarks
	■	VEP88063N	P.C.BOARD W/COMPONENT		FOR AU-63H
			W2 ENCODER		
	■	VEP80632A	P.C.BOARD W/COMPONENT		ON VEP88063N
			W2 SUB		
			CAPACITORS		
C1		ECUM1H103KBN	C.CAPACITOR CH 50V 0.01U	1	
C2		ECEA1CU221	E.CAPACITOR 16V 220U	1	
C3		ECUM1H103KBN	C.CAPACITOR CH 50V 0.01U	1	
C4		ECEA0JU101	E.CAPACITOR 6.3V 100U	1	
C5		ECUM1H103KBN	C.CAPACITOR CH 50V 0.01U	1	
C6		ECEA1CU221	E.CAPACITOR 16V 220U	1	
C7-C9		ECUM1H103KBN	C.CAPACITOR CH 50V 0.01U	3	
C10		ECUM1H103KBN	C.CAPACITOR CH 50V 0.01U	1	
C11		ECEA1AU101	E.CAPACITOR 10V 100U	1	
C12,13		ECUM1H103KBN	C.CAPACITOR CH 50V 0.01U	2	
C14		ECEA1AU101	E.CAPACITOR 10V 100U	1	
C15		ECUM1H470JCN	C.CAPACITOR CH 50V 47P	1	
C16		ECUM1H103KBN	C.CAPACITOR CH 50V 0.01U	1	
C17		ECUM1H120JCN	C.CAPACITOR CH 50V 12P	1	
C18		ECUM1H103KBN	C.CAPACITOR CH 50V 0.01U	1	
C19,20		ECEA1CU221	E.CAPACITOR 16V 220U	2	
C21,22		ECUM1H103KBN	C.CAPACITOR CH 50V 0.01U	2	
C23		ECUM1H470JCN	C.CAPACITOR CH 50V 47P	1	
C24,25		ECUM1H151JCN	C.CAPACITOR CH 50V 150P	2	
C26		ECUM1E104ZFN	C.CAPACITOR CH 25V 0.1U	1	
C27		ECUM1H270JCN	C.CAPACITOR CH 50V 27P	1	
C28		ECQM1H183JF	P.CAPACITOR 50V 0.018U	1	
C29		ECUM1H103KBN	C.CAPACITOR CH 50V 0.01U	1	
C30		ECEA1EN4R7S	E.CAPACITOR 25V 4.7U	1	
C31		ECEA1HN2R2S	E.CAPACITOR 50V 2.2U	1	
C32		ECUM1H103KBN	C.CAPACITOR CH 50V 0.01U	1	
C33		ECEA0JU101	E.CAPACITOR 6.3V 100U	1	
C35		ECEA0JU221	E.CAPACITOR 6.3V 220U	1	
C36		ECUM1H103KBN	C.CAPACITOR CH 50V 0.01U	1	
C37		ECEA0JU221	E.CAPACITOR 6.3V 220U	1	
C38-46		ECUM1H103KBN	C.CAPACITOR CH 50V 0.01U	9	
C49,50		ECUM1H103KBN	C.CAPACITOR CH 50V 0.01U	2	
C51		ECEA1AU101	E.CAPACITOR 10V 100U	1	
C52		ECUM1E104ZFN	C.CAPACITOR CH 25V 0.1U	1	
C53		ECUM1H103KBN	C.CAPACITOR CH 50V 0.01U	1	
C54		ECEA1AU101	E.CAPACITOR 10V 100U	1	
C55		ECUM1H220JCN	C.CAPACITOR CH 50V 22P	1	
C56		ECUM1H103KBN	C.CAPACITOR CH 50V 0.01U	1	
C57		ECUM1H150JCN	C.CAPACITOR CH 50V 15P	1	
C58		ECUM1H103KBN	C.CAPACITOR CH 50V 0.01U	1	
C59		ECEA0JU101	E.CAPACITOR 6.3V 100U	1	
C60		ECUM1H120JCN	C.CAPACITOR CH 50V 12P	1	
C61		ECEA0JU221	E.CAPACITOR 6.3V 220U	1	
C62		ECUM1H103KBN	C.CAPACITOR CH 50V 0.01U	1	
C63		ECEA0JU221	E.CAPACITOR 6.3V 220U	1	
C64-73		ECUM1H103KBN	C.CAPACITOR CH 50V 0.01U	10	
C76		ECUM1H270JCN	C.CAPACITOR CH 50V 27P	1	
C77		ECUM1E104ZFN	C.CAPACITOR CH 25V 0.1U	1	
C78		ECQM1H223JF	P.CAPACITOR 50V 0.022U	1	
C79		ECUM1H103KBN	C.CAPACITOR CH 50V 0.01U	1	
C80,81		ECEA1HN2R2S	E.CAPACITOR 50V 2.2U	2	
C82,83		ECUM1E104ZFN	C.CAPACITOR CH 25V 0.1U	2	
C84		ECEA0JU470	E.CAPACITOR 6.3V 47U	1	
C85,86		ECUM1E104ZFN	C.CAPACITOR CH 25V 0.1U	2	
C87		ECUM1H103KBN	C.CAPACITOR CH 50V 0.01U	1	
C88		ECUM1E104ZFN	C.CAPACITOR CH 25V 0.1U	1	
C89		ECKF1H103ZF	C.CAPACITOR 50V 0.01U	1	
C113		ECUM1E104ZFN	C.CAPACITOR CH 25V 0.1U	1	
C114-17		ECUM1H103KBN	C.CAPACITOR CH 50V 0.01U	4	
C120		ECUM1H103KBN	C.CAPACITOR CH 50V 0.01U	1	
C121		ECEA1AU470	E.CAPACITOR 10V 47U	1	
C122		ECUM1H103KBN	C.CAPACITOR CH 50V 0.01U	1	
C123		ECUM1C104KBN	C.CAPACITOR CH 16V 0.1U	1	
C124		ECUM1H181JCN	C.CAPACITOR CH 50V 180P	1	

Ref.No.		Part No.	Part Name & Description	Pcs	Remarks
C125		ECUM1E104ZFN	C.CAPACITOR CH 25V 0.1U	1	
C126		ECUM1C104KBN	C.CAPACITOR CH 16V 0.1U	1	
C127		ECUM1H180JCN	C.CAPACITOR CH 50V 18P	1	
C128		ECUM1H680JCN	C.CAPACITOR CH 50V 68P	1	
C129,30		ECUM1C104KBN	C.CAPACITOR CH 16V 0.1U	2	
C131		ECEA1HN010S	E.CAPACITOR 50V 1U	1	
C132		ECUM1H103KBN	C.CAPACITOR CH 50V 0.01U	1	
C133		ECEA1AU470	E.CAPACITOR 10V 47U	1	
C134		ECUM1E104ZFN	C.CAPACITOR CH 25V 0.1U	1	
C135		ECUM1H391JCN	C.CAPACITOR CH 50V 390P	1	
C136		ECUM1H151JCN	C.CAPACITOR CH 50V 150P	1	
C137		ECUM1H121JCN	C.CAPACITOR CH 50V 120P	1	
C138		ECUM1H391JCN	C.CAPACITOR CH 50V 390P	1	
C139-41		ECUM1H103KBN	C.CAPACITOR CH 50V 0.01U	3	
C142		ECEA1AU470	E.CAPACITOR 10V 47U	1	
C143,44		ECUM1C104KBN	C.CAPACITOR CH 16V 0.1U	2	
C145		ECUM1H121JCN	C.CAPACITOR CH 50V 120P	1	
C146		ECUM1E104ZFN	C.CAPACITOR CH 25V 0.1U	1	
C147-49		ECUM1C104KBN	C.CAPACITOR CH 16V 0.1U	3	
C150		ECEA1HN010S	E.CAPACITOR 50V 1U	1	
C151		ECUM1H103KBN	C.CAPACITOR CH 50V 0.01U	1	
C152		ECEA1AU470	E.CAPACITOR 10V 47U	1	
C154		ECUM1E104ZFN	C.CAPACITOR CH 25V 0.1U	1	
C155		ECUM1H391JCN	C.CAPACITOR CH 50V 390P	1	
C156		ECUM1H151JCN	C.CAPACITOR CH 50V 150P	1	
C157		ECUM1H121JCN	C.CAPACITOR CH 50V 120P	1	
C158		ECUM1H391JCN	C.CAPACITOR CH 50V 390P	1	
C159,60		ECUM1H821JCN	C.CAPACITOR CH 50V 820P	2	
C161,62		ECEA1AN470S	E.CAPACITOR 10V 47U	2	
C163		ECEA1CU470	E.CAPACITOR 16V 47U	1	
C164		ECQM1H104JF	P.CAPACITOR 50V 0.1U	1	
C165		ECEA1AN470S	E.CAPACITOR 10V 47U	1	
C166		ECUM1H221JCN	C.CAPACITOR CH 50V 220P	1	
C200		ECUM1H103KBN	C.CAPACITOR CH 50V 0.01U	1	
C201		ECEA1AU101	E.CAPACITOR 10V 100U	1	
C202,03		ECUM1H103KBN	C.CAPACITOR CH 50V 0.01U	2	
C204		ECEA1AU101	E.CAPACITOR 10V 100U	1	
C205		ECUM1H103KBN	C.CAPACITOR CH 50V 0.01U	1	
C206		ECUM1H150JCN	C.CAPACITOR CH 50V 15P	1	
C207		ECUM1H470JCN	C.CAPACITOR CH 50V 47P	1	
C209		ECUM1H220JCN	C.CAPACITOR CH 50V 22P	1	
C210		ECUM1H100DCN	C.CAPACITOR CH 50V 10P	1	
C211		ECUM1C104KBN	C.CAPACITOR CH 16V 0.1U	1	
C212		ECUM1E104ZFN	C.CAPACITOR CH 25V 0.1U	1	
C213		ECUM1H221JCN	C.CAPACITOR CH 50V 220P	1	
C214		ECUM1H270JCN	C.CAPACITOR CH 50V 27P	1	
C215		ECUM1H103KBN	C.CAPACITOR CH 50V 0.01U	1	
C219		ECUM1H560JCN	C.CAPACITOR CH 50V 56P	1	
C220		ECUM1E104ZFN	C.CAPACITOR CH 25V 0.1U	1	
C223		ECUM1H221JCN	C.CAPACITOR CH 50V 220P	1	
C224		ECUM1H030DCN	C.CAPACITOR CH 50V 3P	1	
C226		ECEA1HNR47S	E.CAPACITOR 50V 0.47U	1	
C227,28		ECUM1H103KBN	C.CAPACITOR CH 50V 0.01U	2	
C229		ECEA1AU101	E.CAPACITOR 10V 100U	1	
C230,31		ECUM1H103KBN	C.CAPACITOR CH 50V 0.01U	2	
C232		ECEA1AU101	E.CAPACITOR 10V 100U	1	
C233		ECUM1H103KBN	C.CAPACITOR CH 50V 0.01U	1	
C235		ECUM1H120JCN	C.CAPACITOR CH 50V 12P	1	
C236		ECUM1H560JCN	C.CAPACITOR CH 50V 56P	1	
C238		ECUM1H100DCN	C.CAPACITOR CH 50V 10P	1	
C239		ECUM1H680JCN	C.CAPACITOR CH 50V 68P	1	
C240		ECUM1H330JCN	C.CAPACITOR CH 50V 33P	1	
C241		ECUM1H100DCN	C.CAPACITOR CH 50V 10P	1	
C242		ECEA1HNR47S	E.CAPACITOR 50V 0.47U	1	
C243		ECUM1C104KBN	C.CAPACITOR CH 16V 0.1U	1	
C244		ECUM1E104ZFN	C.CAPACITOR CH 25V 0.1U	1	
C245		ECUM1H103KBN	C.CAPACITOR CH 50V 0.01U	1	
C247		ECUM1H103KBN	C.CAPACITOR CH 50V 0.01U	1	
C248		ECEA0JU470	E.CAPACITOR 6.3V 47U	1	
C249		ECUM1H103KBN	C.CAPACITOR CH 50V 0.01U	1	
C257,58		ECUM1E104ZFN	C.CAPACITOR CH 25V 0.1U	2	
C260		ECUM1H221JCN	C.CAPACITOR CH 50V 220P	1	
C261		ECUM1H030DCN	C.CAPACITOR CH 50V 3P	1	
C263		ECUM1H103KBN	C.CAPACITOR CH 50V 0.01U	1	
C264		ECEA1HNR47S	E.CAPACITOR 50V 0.47U	1	

Ref.No.		Part No.	Part Name & Description	Pcs	Remarks
C266,67		ECUM1E104ZFN	C.CAPACITOR CH 25V 0.1U	2	
C268		ECUM1H103KBN	C.CAPACITOR CH 50V 0.01U	1	
C269		ECEA1AU101	E.CAPACITOR 10V 100U	1	
C270,71		ECUM1H103KBN	C.CAPACITOR CH 50V 0.01U	2	
C272		ECEA1AU101	E.CAPACITOR 10V 100U	1	
C273		ECUM1H103KBN	C.CAPACITOR CH 50V 0.01U	1	
C275		ECUM1H120JCN	C.CAPACITOR CH 50V 12P	1	
C276		ECUM1H560JCN	C.CAPACITOR CH 50V 56P	1	
C278		ECUM1H100DCN	C.CAPACITOR CH 50V 10P	1	
C279		ECUM1H680JCN	C.CAPACITOR CH 50V 68P	1	
C280		ECUM1H330JCN	C.CAPACITOR CH 50V 33P	1	
C281		ECUM1H100DCN	C.CAPACITOR CH 50V 10P	1	
C282		ECUM1C104KBN	C.CAPACITOR CH 16V 0.1U	1	
C283		ECUM1E104ZFN	C.CAPACITOR CH 25V 0.1U	1	
C284		ECUM1H103KBN	C.CAPACITOR CH 50V 0.01U	1	
C291		ECUM1H103KBN	C.CAPACITOR CH 50V 0.01U	1	
C292		ECEA1CU221	E.CAPACITOR 16V 220U	1	
C293		ECUM1H103KBN	C.CAPACITOR CH 50V 0.01U	1	
C294		ECEA0JU101	E.CAPACITOR 6.3V 100U	1	
C297,98		ECUM1E104ZFN	C.CAPACITOR CH 25V 0.1U	2	
C299		ECUM1H103KBN	C.CAPACITOR CH 50V 0.01U	1	
C300		ECEA1AU101	E.CAPACITOR 10V 100U	1	
C301		ECUM1H103KBN	C.CAPACITOR CH 50V 0.01U	1	
C303		ECUM1H271JCN	C.CAPACITOR CH 50V 270P	1	
C304		ECUM1H330JCN	C.CAPACITOR CH 50V 33P	1	
C305,06		ECEA1HNR47S	E.CAPACITOR 50V 0.47U	2	
C307,08		ECQM1H104JF	P.CAPACITOR 50V 0.1U	2	
C311		ECUM1H560JCN	C.CAPACITOR CH 50V 56P	1	
C312,13		ECUM1H120JCN	C.CAPACITOR CH 50V 12P	2	
C314		ECUM1H560JCN	C.CAPACITOR CH 50V 56P	1	
C501,02		ECEA1CU101	E.CAPACITOR 16V 100U	2	
C503		ECUM1H330JCN	C.CAPACITOR CH 50V 33P	1	
C504		ECUM1C104KBN	C.CAPACITOR CH 16V 0.1U	1	
C505		ECUM1H103KBN	C.CAPACITOR CH 50V 0.01U	1	
C506		ECEA1HNR47S	E.CAPACITOR 50V 0.47U	1	
C507,08		ECUM1H103KBN	C.CAPACITOR CH 50V 0.01U	2	
C510		ECUM1H103KBN	C.CAPACITOR CH 50V 0.01U	1	
C517		ECUM1H103KBN	C.CAPACITOR CH 50V 0.01U	1	
C518		ECUM1H330JCN	C.CAPACITOR CH 50V 33P	1	
C519,20		ECUM1H103KBN	C.CAPACITOR CH 50V 0.01U	2	
C521		ECEA0JU470	E.CAPACITOR 6.3V 47U	1	
C522		ECUM1H220JCN	C.CAPACITOR CH 50V 22P	1	
C523		ECUM1H181JCN	C.CAPACITOR CH 50V 180P	1	
C524		ECUM1H103KBN	C.CAPACITOR CH 50V 0.01U	1	
C525		ECEA0JU101	E.CAPACITOR 6.3V 100U	1	
C526		ECUM1H103KBN	C.CAPACITOR CH 50V 0.01U	1	
C527,28		ECEA1CU101	E.CAPACITOR 16V 100U	2	
C531		ECEA1CU101	E.CAPACITOR 16V 100U	1	
C532		ECUM1H103KBN	C.CAPACITOR CH 50V 0.01U	1	
C533		ECEA1CU101	E.CAPACITOR 16V 100U	1	
C534,35		ECUM1H103KBN	C.CAPACITOR CH 50V 0.01U	2	
C536,37		ECUM1H560JCN	C.CAPACITOR CH 50V 56P	2	
C538,39		ECUM1H103KBN	C.CAPACITOR CH 50V 0.01U	2	
C540		ECUM1E104ZFN	C.CAPACITOR CH 25V 0.1U	1	
C541		ECUM1H270JCN	C.CAPACITOR CH 50V 27P	1	
C542		ECUM1H221JCN	C.CAPACITOR CH 50V 220P	1	
C543		ECUM1H120JCN	C.CAPACITOR CH 50V 12P	1	
C546		ECUM1H101JCN	C.CAPACITOR CH 50V 100P	1	
C547		ECUM1H470JCN	C.CAPACITOR CH 50V 47P	1	
C548		ECUM1H100DCN	C.CAPACITOR CH 50V 10P	1	
C549		ECUM1H330JCN	C.CAPACITOR CH 50V 33P	1	
C550		ECUM1H103KBN	C.CAPACITOR CH 50V 0.01U	1	
C551		ECUM1H471JCN	C.CAPACITOR CH 50V 470P	1	
C552		ECUM1H270JCN	C.CAPACITOR CH 50V 27P	1	
C553		ECUM1H103KBN	C.CAPACITOR CH 50V 0.01U	1	
C554		ECUM1E104ZFN	C.CAPACITOR CH 25V 0.1U	1	
C555		ECUM1H103KBN	C.CAPACITOR CH 50V 0.01U	1	
C559		ECEA0JU470	E.CAPACITOR 6.3V 47U	1	
C560		ECUM1H103KBN	C.CAPACITOR CH 50V 0.01U	1	
C561		ECEA0JN330S	E.CAPACITOR 6.3V 33U	1	
C562		ECUM1H680JCN	C.CAPACITOR CH 50V 68P	1	
C563		ECUM1H271JCN	C.CAPACITOR CH 50V 270P	1	
C564		ECUM1H151JCN	C.CAPACITOR CH 50V 150P	1	
C565		ECUM1H471JCN	C.CAPACITOR CH 50V 470P	1	
C566		ECEA1CU470	E.CAPACITOR 16V 47U	1	

Ref.No.		Part No.	Part Name & Description	Pcs	Remarks
C567-69		ECUM1H103KBN	C.CAPACITOR CH 50V 0.01U	3	
C570		ECEA1CU470	E.CAPACITOR 16V 47U	1	
C571		ECUM1H103KBN	C.CAPACITOR CH 50V 0.01U	1	
C572		ECUM1E104ZFN	C.CAPACITOR CH 25V 0.1U	1	
C573		ECUM1H103KBN	C.CAPACITOR CH 50V 0.01U	1	
C574,75		ECUM1H220JCN	C.CAPACITOR CH 50V 22P	2	
C576,77		ECUM1H103KBN	C.CAPACITOR CH 50V 0.01U	2	
C578		ECEA0JU101	E.CAPACITOR 6.3V 100U	1	
C579		ECUM1E104ZFN	C.CAPACITOR CH 25V 0.1U	1	
C580,81		ECUM1H220JCN	C.CAPACITOR CH 50V 22P	2	
C582		ECEA0JU101	E.CAPACITOR 6.3V 100U	1	
C583		ECUM1E104ZFN	C.CAPACITOR CH 25V 0.1U	1	
C584		ECUM1H103KBN	C.CAPACITOR CH 50V 0.01U	1	
C585		ECUM1H820JCN	C.CAPACITOR CH 50V 82P	1	
C586		ECUM1H100DCN	C.CAPACITOR CH 50V 10P	1	
C587,88		ECUM1H103KBN	C.CAPACITOR CH 50V 0.01U	2	
C589		ECUM1H271JCN	C.CAPACITOR CH 50V 270P	1	
C590		ECUM1H221JCN	C.CAPACITOR CH 50V 220P	1	
C591		ECUM1H820JCN	C.CAPACITOR CH 50V 82P	1	
C592-97		ECUM1H103KBN	C.CAPACITOR CH 50V 0.01U	6	
C598		ECEA1CU101	E.CAPACITOR 16V 100U	1	
C599,00		ECUM1H103KBN	C.CAPACITOR CH 50V 0.01U	2	
C601		ECEA1CU101	E.CAPACITOR 16V 100U	1	
C602		ECUM1H103KBN	C.CAPACITOR CH 50V 0.01U	1	
C603		ECEA1AU101	E.CAPACITOR 10V 100U	1	
C604		ECUM1H103KBN	C.CAPACITOR CH 50V 0.01U	1	
C605		ECEA1AU101	E.CAPACITOR 10V 100U	1	
C606		ECUM1H103KBN	C.CAPACITOR CH 50V 0.01U	1	
C607		ECEA0JU101	E.CAPACITOR 6.3V 100U	1	
C608		ECUM1H103KBN	C.CAPACITOR CH 50V 0.01U	1	
C609		ECEA0JU101	E.CAPACITOR 6.3V 100U	1	
C610		ECUM1H103KBN	C.CAPACITOR CH 50V 0.01U	1	
C611		ECUM1E104ZFN	C.CAPACITOR CH 25V 0.1U	1	
C612		ECUM1H103KBN	C.CAPACITOR CH 50V 0.01U	1	
C615-18		ECUM1H103KBN	C.CAPACITOR CH 50V 0.01U	4	
C619		ECUM1H221JCN	C.CAPACITOR CH 50V 220P	1	
C620		ECQM1H104JF	P.CAPACITOR 50V 0.1U	1	
C621		ECEA1CU100	E.CAPACITOR 16V 10U	1	
C622		ECQM1H104JF	P.CAPACITOR 50V 0.1U	1	
C623		ECEA1CU470	E.CAPACITOR 16V 47U	1	
C624		ECQM1H104JF	P.CAPACITOR 50V 0.1U	1	
C625		ECEA1CU470	E.CAPACITOR 16V 47U	1	
C626		ECQM1H104JF	P.CAPACITOR 50V 0.1U	1	
C627,28		ECUM1H122JN	C.CAPACITOR CH 50V 1200P	2	
C629		ECUM1H221JCN	C.CAPACITOR CH 50V 220P	1	
C630,31		ECUM1H122JN	C.CAPACITOR CH 50V 1200P	2	
C632		ECUM1H103KBN	C.CAPACITOR CH 50V 0.01U	1	
C634		ECUM1H270JCN	C.CAPACITOR CH 50V 27P	1	
C635		ECCF1H120JC	C.CAPACITOR 50V 12P	1	
C800		ECUM1H122JN	C.CAPACITOR CH 50V 1200P	1	
C801		ECUM1H151JCN	C.CAPACITOR CH 50V 150P	1	
C802		ECQM1H122JF	P.CAPACITOR 50V 1200P	1	
C803		ECQV1H684JZ	P.CAPACITOR 50V 0.68U	1	
C804,06		ECUM1H151JCN	C.CAPACITOR CH 50V 150P	2	
C808		ECUM1H151JCN	C.CAPACITOR CH 50V 150P	1	
C809,10		ECUM1H122JN	C.CAPACITOR CH 50V 1200P	2	
C812		ECUM1H103KBN	C.CAPACITOR CH 50V 0.01U	1	
C813		ECUM1H101JCN	C.CAPACITOR CH 50V 100P	1	
C814-22		ECUM1H122JN	C.CAPACITOR CH 50V 1200P	9	
C823-25		ECUM1E104ZFN	C.CAPACITOR CH 25V 0.1U	3	
C827		ECEA0JU101	E.CAPACITOR 6.3V 100U	1	
C828,29		ECUM1H101JCN	C.CAPACITOR CH 50V 100P	2	
C830		ECUM1H820JCN	C.CAPACITOR CH 50V 82P	1	
C831		ECUM1H103KBN	C.CAPACITOR CH 50V 0.01U	1	
C832		ECUM1E104ZFN	C.CAPACITOR CH 25V 0.1U	1	
C834		ECEA1CN100S	E.CAPACITOR 16V 10U	1	
C835		ECEA1EN4R7S	E.CAPACITOR 25V 4.7U	1	
C836		ECEA0JN330S	E.CAPACITOR 6.3V 33U	1	
C837		ECEA1EN4R7S	E.CAPACITOR 25V 4.7U	1	
C838		ECUM1E104ZFN	C.CAPACITOR CH 25V 0.1U	1	
C841		ECUM1H103KBN	C.CAPACITOR CH 50V 0.01U	1	
C842		ECEA0JU101	E.CAPACITOR 6.3V 100U	1	
C843,44		ECUM1H103KBN	C.CAPACITOR CH 50V 0.01U	2	
C845		ECEA0JU101	E.CAPACITOR 6.3V 100U	1	
C846,47		ECUM1H103KBN	C.CAPACITOR CH 50V 0.01U	2	

Ref.No.		Part No.	Part Name & Description	Pcs	Remarks
C848		ECEA0JU101	E.CAPACITOR 6.3V 100U	1	
C849		ECUM1H103KBN	C.CAPACITOR CH 50V 0.01U	1	
C850		ECEA0JU101	E.CAPACITOR 6.3V 100U	1	
C851		ECUM1H820JCN	C.CAPACITOR CH 50V 82P	1	
C852		ECUM1H103KBN	C.CAPACITOR CH 50V 0.01U	1	
C853		ECUM1H122JN	C.CAPACITOR CH 50V 1200P	1	
C854		ECQB1H272JF	P.CAPACITOR 50V 2700P	1	
C855,56		ECCF1H331JC	C.CAPACITOR 50V 330P	2	
C857		ECCF1H330JC	C.CAPACITOR 50V 33P	1	
C1001		ECEA1HU010	E.CAPACITOR 50V 1U	1	
C1003,04		ECEA1CN100S	E.CAPACITOR 16V 10U	2	
C1005		ECUM1H221JCN	C.CAPACITOR CH 50V 220P	1	
C1006		ECUM1H470JCN	C.CAPACITOR CH 50V 47P	1	
D1		1S251	DIODE	1	
D2		MA153	DIODE	1	
D4		MA153	DIODE	1	
D8		MA151WK	DIODE	1	
D11		MA151WK	DIODE	1	
D200,01		RD4.7EB2	ZENER 4.7V	2	
D203,04		MA151K	DIODE	2	
D210		MA151K	DIODE	1	
D501		RD3.6EB	ZENER 3.6V	1	
D508		RD4.7EB2	ZENER 4.7V	1	
D510,11		MA335-R	DIODE	2	
D512		MA153	DIODE	1	
D514		MA151K	DIODE	1	
D800		MA704	DIODE	1	
D801		MA153	DIODE	1	
D802		MA151K	DIODE	1	
D803		MA165TA	DIODE	1	
FL1		VLF0650	FILTER	1	
FL3		VLF0754	FILTER	1	
FL200		VLF0712	FILTER	1	
FL201,02		VLF0753	FILTER	2	
IC1		AN78N09	IC	1	
IC1		MC10107L	IC	1	
IC2		AN79N09	IC	1	
IC3		MC74HC4053F	IC	1	
IC4-C6		TL082CPS	IC	3	
IC7		HA19211BNT	IC	1	
IC8		MC74HC574AF	IC	1	
IC9		TL082CPS	IC	1	
IC10-12		TL082CPS	IC	3	
IC13		HA19211BNT	IC	1	
IC14		MC74HC574AF	IC	1	
IC15		AN78N09	IC	1	
IC16		AN79N09	IC	1	
IC17		AN79L05	IC	1	
IC18,19		AN78N05	IC	2	
IC26,27		AN91A12S	IC	2	
IC28		MC74HC08AF	IC	1	
IC29		SN74LS123NS	IC	1	
IC30		NE521D	IC	1	
IC32		AN78N05	IC	1	
IC33		AN79N05	IC	1	
IC200		AN78N09	IC	1	
IC201		AN79N09	IC	1	
IC202		AN78N09	IC	1	
IC203		AN79N09	IC	1	
IC204		AN78N09	IC	1	
IC205		AN79N09	IC	1	
IC206		TL082CPS	IC	1	
IC207		CA3054	IC	1	
IC208-10		TL082CPS	IC	3	
IC211		AN78L05	IC	1	
IC215		TL082CPS	IC	1	

Ref.No.		Part No.	Part Name & Description	Pcs	Remarks
IC216		AN79L09	IC	1	
IC501		TL082CPS	IC	1	
IC502,03		CA3054	IC	2	
IC504,05		NJM1496M	IC	2	
IC506		10116D	IC	1	
IC507		MC74HC04AF	IC	1	
IC508		NJM1496M	IC	1	
IC509		MC74HC00AF	IC	1	
IC510		MC74HC74AF	IC	1	
IC511		SN74LS123NS	IC	1	
IC512		10116D	IC	1	
IC513		MC74HC00AF	IC	1	
IC514		MC74HC74AF	IC	1	
IC517		AN78N09	IC	1	
IC518		AN79N09	IC	1	
IC519		AN78N05	IC	1	
IC520		AN79N05	IC	1	
IC521		AN78N09	IC	1	
IC522		AN79N09	IC	1	
IC523		MC74HC04AF	IC	1	
IC800		NE521D	IC	1	
IC801		MC74HC126AF	IC	1	
IC802,03		MC10125L	IC	2	
IC804		MN53010VYD	IC	1	
IC805		UPC311G	IC	1	
IC806		MC74HC126AF	IC	1	
IC807-14		TL082CPS	IC	8	
IC815-17		MC74HC4053F	IC	3	
IC818		AN78N09	IC	1	
IC819		AN79N09	IC	1	
IC820		AN78N05	IC	1	
IC821		AN79N05	IC	1	
L1-L3		VLP0017	COIL	3	
L5		VLQEL05S821J	COIL 820UH	1	
L6-L9		VLP0017	COIL	4	
L10		VLQEL05S221J	COIL 220UH	1	
L12		VLQEL05S5R6J	COIL 5.6UH	1	
L13		VLQEL05S390J	COIL 39UH	1	
L14		VLQEL05S100J	COIL 10UH	1	
L15		VLQEL05S5R6J	COIL 5.6UH	1	
L17		VLQEL05S5R6J	COIL 5.6UH	1	
L18		VLQEL05S390J	COIL 39UH	1	
L19		VLQEL05S100J	COIL 10UH	1	
L20		VLQEL05S5R6J	COIL 5.6UH	1	
L200		VLQEL05S6R8J	COIL 6.8UH	1	
L201		VLQEL05S151J	COIL 150UH	1	
L203		VLQEL05S151J	COIL 150UH	1	
L205,06		VLP0017	COIL	2	
L208,09		VLQEL05S6R8J	COIL 6.8UH	2	
L210		VLQEL05S101J	COIL 100UH	1	
L211,12		VLQEL05S6R8J	COIL 6.8UH	2	
L501,02		VLQEL05S101K	COIL 100UH	2	
L503		VLQEL05S6R8J	COIL 6.8UH	1	
L505		VLQEL05S101K	COIL 100UH	1	
L506		VLQEL05S680J	COIL 68UH	1	
L507,08		VLQEL05S101K	COIL 100UH	2	
L511		VLQEL05S150J	COIL 15UH	1	
L512		VLQEL05S5R6J	COIL 5.6UH	1	
L513		VLQEL05S6R8J	COIL 6.8UH	1	
L514		VLQEL05S180J	COIL 18UH	1	
L515		VLQEL05S560J	COIL 56UH	1	
L518,19		VLQEL05S101K	COIL 100UH	2	
L520,21		VLQEL05S470J	COIL 47UH	2	
L522,23		VLP0017	COIL	2	
L800		VLQEL06F8R2J	COIL 8.2UH	1	
L801		VLQEL05S8R2J	COIL 8.2UH	1	
Q1		2SD601-R	TRANSISTOR CHIP	1	(Q,R)
Q2		2SB709-R	TRANSISTOR CHIP	1	(Q,R)
Q3		2SD601-R	TRANSISTOR CHIP	1	(Q,R)

Ref.No.		Part No.	Part Name & Description	Pcs	Remarks
Q4,Q5		2SB709-R	TRANSISTOR CHIP	2	(Q,R)
Q6,Q7		2SC2404-C	TRANSISTOR CHIP	2	(C,D)
Q8		2SA1022-B	TRANSISTOR CHIP	1	(B,C)
Q9		2SC2295-B	TRANSISTOR CHIP	1	(B,C)
Q10		2SA1022-B	TRANSISTOR CHIP	1	(B,C)
Q11		2SK374-R	TRANSISTOR	1	(Q,R)
Q12		2SB709-R	TRANSISTOR CHIP	1	(Q,R)
Q13		2SD601-R	TRANSISTOR CHIP	1	(Q,R)
Q14		2SB709-R	TRANSISTOR CHIP	1	(Q,R)
Q15		2SD601-R	TRANSISTOR CHIP	1	(Q,R)
Q16		2SB709-R	TRANSISTOR CHIP	1	(Q,R)
Q17,18		2SC2404-C	TRANSISTOR CHIP	2	(C,D)
Q19		2SA1022-B	TRANSISTOR CHIP	1	(B,C)
Q20		2SC2295-B	TRANSISTOR CHIP	1	(B,C)
Q21		2SA1022-B	TRANSISTOR CHIP	1	(B,C)
Q22		2SK374-R	TRANSISTOR	1	(Q,R)
Q23		2SB709-R	TRANSISTOR CHIP	1	(Q,R)
Q24		2SD601-R	TRANSISTOR CHIP	1	(Q,R)
Q25		2SA1022-B	TRANSISTOR CHIP	1	(B,C)
Q26-28		2SD601-R	TRANSISTOR CHIP	3	(Q,R)
Q200		2SD601-R	TRANSISTOR CHIP	1	(Q,R)
Q201,02		2SB709-R	TRANSISTOR CHIP	2	(Q,R)
Q203,04		2SD601-R	TRANSISTOR CHIP	2	(Q,R)
Q205,06		2SC2404-C	TRANSISTOR CHIP	2	(C,D)
Q207		2SA1022-B	TRANSISTOR CHIP	1	(B,C)
Q208		2SC2295-B	TRANSISTOR CHIP	1	(B,C)
Q209		2SD601-R	TRANSISTOR CHIP	1	(Q,R)
Q210		2SK198	TRANSISTOR	1	(Q,R)
Q211-15		2SD601-R	TRANSISTOR CHIP	5	(Q,R)
Q219		2SD601-R	TRANSISTOR CHIP	1	(Q,R)
Q220,21		2SB709-R	TRANSISTOR CHIP	2	(Q,R)
Q222		2SD601-R	TRANSISTOR CHIP	1	(Q,R)
Q223,24		2SC2404-C	TRANSISTOR CHIP	2	(C,D)
Q225		2SA1022-B	TRANSISTOR CHIP	1	(B,C)
Q226		2SC2295-B	TRANSISTOR CHIP	1	(B,C)
Q227		2SD601-R	TRANSISTOR CHIP	1	(Q,R)
Q229		2SB709-R	TRANSISTOR CHIP	1	(Q,R)
Q230		2SD601-R	TRANSISTOR CHIP	1	(Q,R)
Q232,33		2SB709-R	TRANSISTOR CHIP	2	(Q,R)
Q234		2SD601-R	TRANSISTOR CHIP	1	(Q,R)
Q235,36		2SC2404-C	TRANSISTOR CHIP	2	(C,D)
Q237		2SK198	TRANSISTOR	1	(Q,R)
Q238,39		2SB709-R	TRANSISTOR CHIP	2	(Q,R)
Q240		2SD601-R	TRANSISTOR CHIP	1	(Q,R)
Q241,42		2SC2404-C	TRANSISTOR CHIP	2	(C,D)
Q243		2SA1022-B	TRANSISTOR CHIP	1	(B,C)
Q244		2SC2295-B	TRANSISTOR CHIP	1	(B,C)
Q245		2SD601-R	TRANSISTOR CHIP	1	(Q,R)
Q246		2SK198	TRANSISTOR	1	(Q,R)
Q247		2SB709-R	TRANSISTOR CHIP	1	(Q,R)
Q248,49		2SD601-R	TRANSISTOR CHIP	2	(Q,R)
Q250,51		2SB709-R	TRANSISTOR CHIP	2	(Q,R)
Q252		2SD601-R	TRANSISTOR CHIP	1	(Q,R)
Q253,54		2SC2404-C	TRANSISTOR CHIP	2	(C,D)
Q255		2SK198	TRANSISTOR	1	(Q,R)
Q256		2SC2404-C	TRANSISTOR CHIP	1	(C,D)
Q257		2SB709-R	TRANSISTOR CHIP	1	(Q,R)
Q258		2SA1022-B	TRANSISTOR CHIP	1	(B,C)
Q259-63		2SC2295-B	TRANSISTOR CHIP	5	(B,C)
Q265		2SC2295-B	TRANSISTOR CHIP	1	(B,C)
Q266,67		2SD601-R	TRANSISTOR CHIP	2	(Q,R)
Q284		2SK198	TRANSISTOR	1	(Q,R)
Q285		2SC2295-B	TRANSISTOR CHIP	1	(B,C)
Q286,87		2SD601-R	TRANSISTOR CHIP	2	(Q,R)
Q288,89		2SB709-R	TRANSISTOR CHIP	2	(Q,R)
Q290		2SD601-R	TRANSISTOR CHIP	1	(Q,R)
Q291,92		2SB709-R	TRANSISTOR CHIP	2	(Q,R)
Q501,02		2SC2295-B	TRANSISTOR CHIP	2	(B,C)
Q503,04		2SD601-R	TRANSISTOR CHIP	2	(Q,R)
Q505		2SK198	TRANSISTOR	1	(Q,R)
Q506		2SB709-R	TRANSISTOR CHIP	1	(Q,R)
Q507-09		2SD601-R	TRANSISTOR CHIP	3	(Q,R)
Q514-16		2SD601-R	TRANSISTOR CHIP	3	(Q,R)
Q518		2SD601-R	TRANSISTOR CHIP	1	(Q,R)
Q519		2SC2295-B	TRANSISTOR CHIP	1	(B,C)

Ref.No.		Part No.	Part Name & Description	Pcs	Remarks
Q520		2SD601-R	TRANSISTOR CHIP	1	(Q,R)
Q521,22		2SC2295-B	TRANSISTOR CHIP	2	(B,C)
Q523		2SD601-R	TRANSISTOR CHIP	1	(Q,R)
Q524,25		2SB709-R	TRANSISTOR CHIP	2	(Q,R)
Q526,27		2SC2295-B	TRANSISTOR CHIP	2	(B,C)
Q528		2SD601-R	TRANSISTOR CHIP	1	(Q,R)
Q532		2SB709-R	TRANSISTOR CHIP	1	(Q,R)
Q533-37		2SD601-R	TRANSISTOR CHIP	5	(Q,R)
Q538		2SB709-R	TRANSISTOR CHIP	1	(Q,R)
Q539		2SD601-R	TRANSISTOR CHIP	1	(Q,R)
Q540		2SB709-R	TRANSISTOR CHIP	1	(Q,R)
Q541		2SD601-R	TRANSISTOR CHIP	1	(Q,R)
Q542		2SB709-R	TRANSISTOR CHIP	1	(Q,R)
Q543		2SD601-R	TRANSISTOR CHIP	1	(Q,R)
Q544		2SB709-R	TRANSISTOR CHIP	1	(Q,R)
Q545-52		2SD601-R	TRANSISTOR CHIP	8	(Q,R)
Q800		2SC2295-B	TRANSISTOR CHIP	1	(B,C)
Q801		2SD601-R	TRANSISTOR CHIP	1	(Q,R)
Q802		2SB709-R	TRANSISTOR CHIP	1	(Q,R)
Q803		2SC2295-B	TRANSISTOR CHIP	1	(B,C)
Q804		2SB709-R	TRANSISTOR CHIP	1	(Q,R)
Q805		2SC2295-B	TRANSISTOR CHIP	1	(B,C)
Q807		2SD601-R	TRANSISTOR CHIP	1	(Q,R)
Q808-15		2SC2295-B	TRANSISTOR CHIP	8	(B,C)
Q816,17		2SB709-R	TRANSISTOR CHIP	2	(Q,R)
Q818,19		2SC2295-B	TRANSISTOR CHIP	2	(B,C)
Q826		ECUM1E104ZFN	C.CAPACITOR CH 25V 0.1U	1	
Q833		ECUM1E104ZFN	C.CAPACITOR CH 25V 0.1U	1	
			RESISTORS		
R1		ERJ6GEYG222	M.RESISTOR CH 1/10W 2.2K	1	
R2,R3		ERJ6GEYG220	M.RESISTOR CH 1/10W 22	2	
R4,R5		ERJ6GEYG152	M.RESISTOR CH 1/10W 1.5K	2	
R6,R7		VRE0034E561	M.RESISTOR CH 1/10W 560	2	
R8		ERJ6GEYG150	M.RESISTOR CH 1/10W 15	1	
R9		ERJ6GEYG473	M.RESISTOR CH 1/10W 47K	1	
R10		VRE0034E301	M.RESISTOR CH 1/10W 300	1	
R11		ERJ6GEYG220	M.RESISTOR CH 1/10W 22	1	
R12		ERJ6GEYG122	M.RESISTOR CH 1/10W 1.2K	1	
R13		VRE0034E221	M.RESISTOR CH 1/10W 220	1	
R14		VRE0034E121	M.RESISTOR CH 1/10W 120	1	
R15		VRE0034E301	M.RESISTOR CH 1/10W 300	1	
R16		ERJ6GEYG683	M.RESISTOR CH 1/10W 68K	1	
R17		ERJ6GEYG332	M.RESISTOR CH 1/10W 3.3K	1	
R18		ERJ6GEYG151	M.RESISTOR CH 1/10W 150	1	
R19		ERJ6GEYG101	M.RESISTOR CH 1/10W 100	1	
R20		ERJ6GEYG472	M.RESISTOR CH 1/10W 4.7K	1	
R21		ERJ6GEYG183	M.RESISTOR CH 1/10W 18K	1	
R22		ERJ6GEYG821	M.RESISTOR CH 1/10W 820	1	
R23,24		ERJ6GEYG102	M.RESISTOR CH 1/10W 1K	2	
R25,26		ERJ6GEYG101	M.RESISTOR CH 1/10W 100	2	
R27		ERJ6GEYG122	M.RESISTOR CH 1/10W 1.2K	1	
R28		ERJ6GEYG471	M.RESISTOR CH 1/10W 470	1	
R29		ERJ6GEYG222	M.RESISTOR CH 1/10W 2.2K	1	
R30		ERJ6GEYG272	M.RESISTOR CH 1/10W 2.7K	1	
R31		VRE0034E333	M.RESISTOR CH 1/10W 33K	1	
R32		VRE0034E103	M.RESISTOR CH 1/10W 10K	1	
R33		ERJ6GEYG222	M.RESISTOR CH 1/10W 2.2K	1	
R34		ERJ6GEYG223	M.RESISTOR CH 1/10W 22K	1	
R35		ERJ6GEYG562	M.RESISTOR CH 1/10W 5.6K	1	
R36,37		ERJ6GEYG332	M.RESISTOR CH 1/10W 3.3K	2	
R38		ERJ6GEYG823	M.RESISTOR CH 1/10W 82K	1	
R39		ERJ6GEYG332	M.RESISTOR CH 1/10W 3.3K	1	
R40		ERJ6GEYG222	M.RESISTOR CH 1/10W 2.2K	1	
R41		ERJ6GEYG563	M.RESISTOR CH 1/10W 56K	1	
R42		ERJ6GEYG333	M.RESISTOR CH 1/10W 33K	1	
R43		ERJ6GEYG332	M.RESISTOR CH 1/10W 3.3K	1	
R44		ERJ6GEYG272	M.RESISTOR CH 1/10W 2.7K	1	
R45		ERJ6GEYG273	M.RESISTOR CH 1/10W 27K	1	
R46		ERJ6GEYG224	M.RESISTOR CH 1/10W 220K	1	
R47		ERJ6GEYG472	M.RESISTOR CH 1/10W 4.7K	1	
R48		ERJ6GEYG272	M.RESISTOR CH 1/10W 2.7K	1	
R49		ERJ6GEYG221	M.RESISTOR CH 1/10W 220	1	

Ref.No.		Part No.	Part Name & Description	Pcs	Remarks
R50		ERJ6GEYG391	M.RESISTOR CH 1/10W 390	1	
R51		VRE0034E273	M.RESISTOR CH 1/10W 27K	1	
R52		VRE0034E203	M.RESISTOR CH 1/10W 20K	1	
R53		VRE0034E153	M.RESISTOR CH 1/10W 15K	1	
R54		ERJ6GEYG220	M.RESISTOR CH 1/10W 22	1	
R55		ERJ6GEYG222	M.RESISTOR CH 1/10W 2.2K	1	
R56		ERJ6GEYG332	M.RESISTOR CH 1/10W 3.3K	1	
R57		ERJ6GEYG222	M.RESISTOR CH 1/10W 2.2K	1	
R58,59		ERJ6GEYG220	M.RESISTOR CH 1/10W 22	2	
R60,61		ERJ6GEYG152	M.RESISTOR CH 1/10W 1.5K	2	
R62,63		VRE0034E561	M.RESISTOR CH 1/10W 560	2	
R64		ERJ6GEYG150	M.RESISTOR CH 1/10W 15	1	
R65		VRE0034E301	M.RESISTOR CH 1/10W 300	1	
R66		ERJ6GEYG220	M.RESISTOR CH 1/10W 22	1	
R67		ERJ6GEYG222	M.RESISTOR CH 1/10W 2.2K	1	
R68		ERJ6GEYG102	M.RESISTOR CH 1/10W 1K	1	
R69		ERJ6GEYG471	M.RESISTOR CH 1/10W 470	1	
R70		ERJ6GEYG122	M.RESISTOR CH 1/10W 1.2K	1	
R71		ERJ6GEYG101	M.RESISTOR CH 1/10W 100	1	
R72		ERJ6GEYG472	M.RESISTOR CH 1/10W 4.7K	1	
R73		ERJ6GEYG183	M.RESISTOR CH 1/10W 18K	1	
R74		ERJ6GEYG102	M.RESISTOR CH 1/10W 1K	1	
R75		ERJ6GEYG101	M.RESISTOR CH 1/10W 100	1	
R76		ERJ6GEYG102	M.RESISTOR CH 1/10W 1K	1	
R77		ERJ6GEYG101	M.RESISTOR CH 1/10W 100	1	
R78		ERJ6GEYG122	M.RESISTOR CH 1/10W 1.2K	1	
R79		ERJ6GEYG471	M.RESISTOR CH 1/10W 470	1	
R80		ERJ6GEYG222	M.RESISTOR CH 1/10W 2.2K	1	
R81		ERJ6GEYG272	M.RESISTOR CH 1/10W 2.7K	1	
R82		ERJ6GEYG223	M.RESISTOR CH 1/10W 22K	1	
R83		ERJ6GEYG222	M.RESISTOR CH 1/10W 2.2K	1	
R84		ERJ6GEYG220	M.RESISTOR CH 1/10W 22	1	
R85		ERJ6GEYG562	M.RESISTOR CH 1/10W 5.6K	1	
R86,87		ERJ6GEYG332	M.RESISTOR CH 1/10W 3.3K	2	
R88		ERJ6GEYG823	M.RESISTOR CH 1/10W 82K	1	
R89		ERJ6GEYG332	M.RESISTOR CH 1/10W 3.3K	1	
R90		ERJ6GEYG222	M.RESISTOR CH 1/10W 2.2K	1	
R91		ERJ6GEYG563	M.RESISTOR CH 1/10W 56K	1	
R92		ERJ6GEYG333	M.RESISTOR CH 1/10W 33K	1	
R93		ERJ6GEYG332	M.RESISTOR CH 1/10W 3.3K	1	
R94		ERJ6GEYG273	M.RESISTOR CH 1/10W 27K	1	
R95		ERJ6GEYG272	M.RESISTOR CH 1/10W 2.7K	1	
R96		ERJ6GEYG472	M.RESISTOR CH 1/10W 4.7K	1	
R97		ERJ6GEYG224	M.RESISTOR CH 1/10W 220K	1	
R98		ERJ6GEYG272	M.RESISTOR CH 1/10W 2.7K	1	
R99		ERJ6GEYG221	M.RESISTOR CH 1/10W 220	1	
R100		ERJ6GEYG222	M.RESISTOR CH 1/10W 2.2K	1	
R101		ERJ6GEYG332	M.RESISTOR CH 1/10W 3.3K	1	
R102		ERJ6GEYG272	M.RESISTOR CH 1/10W 2.7K	1	
R103		VRE0034E223	M.RESISTOR CH 1/10W 22K	1	
R104		VRE0034E153	M.RESISTOR CH 1/10W 15K	1	
R105		ERJ6GEYG272	M.RESISTOR CH 1/10W 2.7K	1	
R109,10		ERJ6GEY0R00	M.RESISTOR CH 1/10W 0	2	
R133		ERJ6GEYG224	M.RESISTOR CH 1/10W 220K	1	
R135,36		ERJ6GEYG822	M.RESISTOR CH 1/10W 8.2K	2	
R137		ERJ6GEYG222	M.RESISTOR CH 1/10W 2.2K	1	
R138		ERJ6GEYG102	M.RESISTOR CH 1/10W 1K	1	
R139		ERJ6GEYG222	M.RESISTOR CH 1/10W 2.2K	1	
R140		ERJ6GEYG104	M.RESISTOR CH 1/10W 100K	1	
R141		ERJ6GEYG470	M.RESISTOR CH 1/10W 47	1	
R142		ERJ6GEYG681	M.RESISTOR CH 1/10W 680	1	
R143,44		ERJ6GEYG301	M.RESISTOR CH 1/10W 300	2	
R145		ERJ6GEYG223	M.RESISTOR CH 1/10W 22K	1	
R146		ERJ6GEYG105	M.RESISTOR CH 1/10W 1M	1	
R148,49		ERJ6GEYG103	M.RESISTOR CH 1/10W 10K	2	
R150		ERJ6GEYG104	M.RESISTOR CH 1/10W 100K	1	
R151		ERJ6GEYG102	M.RESISTOR CH 1/10W 1K	1	
R152		ERJ6GEYG222	M.RESISTOR CH 1/10W 2.2K	1	
R153		ERJ6GEYG333	M.RESISTOR CH 1/10W 33K	1	
R154		ERJ6GEYG104	M.RESISTOR CH 1/10W 100K	1	
R155		ERJ6GEYG332	M.RESISTOR CH 1/10W 3.3K	1	
R156		ERJ6GEYG472	M.RESISTOR CH 1/10W 4.7K	1	
R157		ERJ6GEYG103	M.RESISTOR CH 1/10W 10K	1	
R158		ERJ6GEYG221	M.RESISTOR CH 1/10W 220	1	
R159		ERJ6GEYG681	M.RESISTOR CH 1/10W 680	1	

Ref.No.		Part No.	Part Name & Description	Pcs	Remarks
R160,61		ERJ6GEYG301	M.RESISTOR CH 1/10W 300	2	
R162,63		ERJ6GEYG103	M.RESISTOR CH 1/10W 10K	2	
R164,65		ERJ6GEY0R00	M.RESISTOR CH 1/10W 0	2	
R166,67		ERJ6GEYG102	M.RESISTOR CH 1/10W 1K	2	
R168		ERJ6GEYG470	M.RESISTOR CH 1/10W 47	1	
R169,70		ERJ6GEYG272	M.RESISTOR CH 1/10W 2.7K	2	
R171		ERJ6GEYG102	M.RESISTOR CH 1/10W 1K	1	
R172		ERJ6GEYG272	M.RESISTOR CH 1/10W 2.7K	1	
R173		ERJ6GEYG470	M.RESISTOR CH 1/10W 47	1	
R174		ERJ6GEYJ471	M.RESISTOR CH 1/10W 470	1	
R175		ERJ6GEY0R00	M.RESISTOR CH 1/10W 0	1	
R176		ERDS2TJ101	C.RESISTOR 1/4W 100	1	
R178		ERDS2TJ681	C.RESISTOR 1/4W 680	1	
R200		ERJ6GEYG272	M.RESISTOR CH 1/10W 2.7K	1	
R201		ERJ6GEYG222	M.RESISTOR CH 1/10W 2.2K	1	
R202,03		VRE0034E331	M.RESISTOR CH 1/10W 330	2	
R204		ERJ6GEYG470	M.RESISTOR CH 1/10W 47	1	
R205		ERJ6GEYG272	M.RESISTOR CH 1/10W 2.7K	1	
R206,07		VRE0034E102	M.RESISTOR CH 1/10W 1K	2	
R209		VRE0034E621	M.RESISTOR CH 1/10W 620	1	
R210,11		ERJ6GEYG272	M.RESISTOR CH 1/10W 2.7K	2	
R212		ERJ6GEYG102	M.RESISTOR CH 1/10W 1K	1	
R213		ERJ6GEYG221	M.RESISTOR CH 1/10W 220	1	
R214		ERJ6GEYG681	M.RESISTOR CH 1/10W 680	1	
R215		ERJ6GEYG101	M.RESISTOR CH 1/10W 100	1	
R216		ERJ6GEYG102	M.RESISTOR CH 1/10W 1K	1	
R217		ERJ6GEYG101	M.RESISTOR CH 1/10W 100	1	
R218		ERJ6GEYG102	M.RESISTOR CH 1/10W 1K	1	
R219		ERJ6GEYG152	M.RESISTOR CH 1/10W 1.5K	1	
R220		ERJ6GEYG222	M.RESISTOR CH 1/10W 2.2K	1	
R221		ERJ6GEYG471	M.RESISTOR CH 1/10W 470	1	
R222,23		ERJ6GEYG222	M.RESISTOR CH 1/10W 2.2K	2	
R224		ERJ6GEYG101	M.RESISTOR CH 1/10W 100	1	
R225		ERJ6GEYG683	M.RESISTOR CH 1/10W 68K	1	
R226		ERJ6GEYG272	M.RESISTOR CH 1/10W 2.7K	1	
R227		ERJ6GEYG222	M.RESISTOR CH 1/10W 2.2K	1	
R228		ERJ6GEYG103	M.RESISTOR CH 1/10W 10K	1	
R229		ERJ6GEYG102	M.RESISTOR CH 1/10W 1K	1	
R230		ERJ6GEYG222	M.RESISTOR CH 1/10W 2.2K	1	
R231		ERJ6GEYG470	M.RESISTOR CH 1/10W 47	1	
R233		ERJ6GEYG102	M.RESISTOR CH 1/10W 1K	1	
R234		ERJ6GEYG681	M.RESISTOR CH 1/10W 680	1	
R235		ERJ6GEYG561	M.RESISTOR CH 1/10W 560	1	
R236		ERJ6GEYG121	M.RESISTOR CH 1/10W 120	1	
R237		ERJ6GEYG391	M.RESISTOR CH 1/10W 390	1	
R238		ERJ6GEYG223	M.RESISTOR CH 1/10W 22K	1	
R240		ERJ6GEYG182	M.RESISTOR CH 1/10W 1.8K	1	
R241		ERJ6GEYG273	M.RESISTOR CH 1/10W 27K	1	
R242		ERJ6GEYG470	M.RESISTOR CH 1/10W 47	1	
R243		ERJ6GEYG182	M.RESISTOR CH 1/10W 1.8K	1	
R244		VRE0034E151	M.RESISTOR CH 1/10W 150	1	
R245		ERJ6GEYG152	M.RESISTOR CH 1/10W 1.5K	1	
R246		ERJ6GEYG331	M.RESISTOR CH 1/10W 330	1	
R257		VRE0034E331	M.RESISTOR CH 1/10W 330	1	
R258-60		VRE0034E301	M.RESISTOR CH 1/10W 300	3	
R262,63		VRE0034E102	M.RESISTOR CH 1/10W 1K	2	
R264		VRE0034E821	M.RESISTOR CH 1/10W 820	1	
R265,66		VRE0034E102	M.RESISTOR CH 1/10W 1K	2	
R268		ERJ6GEY0R00	M.RESISTOR CH 1/10W 0	1	
R269		ERJ6GEYG272	M.RESISTOR CH 1/10W 2.7K	1	
R270		ERJ6GEYG471	M.RESISTOR CH 1/10W 470	1	
R271		ERJ6GEYG331	M.RESISTOR CH 1/10W 330	1	
R272		ERJ6GEYG152	M.RESISTOR CH 1/10W 1.5K	1	
R273		ERJ6GEYG102	M.RESISTOR CH 1/10W 1K	1	
R274		ERJ6GEYG101	M.RESISTOR CH 1/10W 100	1	
R275		ERJ6GEYG102	M.RESISTOR CH 1/10W 1K	1	
R276		ERJ6GEYG101	M.RESISTOR CH 1/10W 100	1	
R277		ERJ6GEYG152	M.RESISTOR CH 1/10W 1.5K	1	
R278		ERJ6GEYG471	M.RESISTOR CH 1/10W 470	1	
R279		ERJ6GEYG222	M.RESISTOR CH 1/10W 2.2K	1	
R280		ERJ6GEYG152	M.RESISTOR CH 1/10W 1.5K	1	
R281		ERJ6GEYG222	M.RESISTOR CH 1/10W 2.2K	1	
R282		ERJ6GEYG101	M.RESISTOR CH 1/10W 100	1	
R283		ERJ6GEYG272	M.RESISTOR CH 1/10W 2.7K	1	
R285,86		ERJ6GEYG103	M.RESISTOR CH 1/10W 10K	2	

Ref.No.		Part No.	Part Name & Description	Pcs	Remarks
R288		ERJ6GEYG102	M.RESISTOR CH 1/10W 1K	1	
R290		ERJ6GEYG470	M.RESISTOR CH 1/10W 47	1	
R291		ERJ6GEYG222	M.RESISTOR CH 1/10W 2.2K	1	
R292		ERJ6GEYG102	M.RESISTOR CH 1/10W 1K	1	
R293		ERJ6GEYG152	M.RESISTOR CH 1/10W 1.5K	1	
R294		ERJ6GEYG470	M.RESISTOR CH 1/10W 47	1	
R298		ERJ6GEYG470	M.RESISTOR CH 1/10W 47	1	
R299		ERJ6GEYG272	M.RESISTOR CH 1/10W 2.7K	1	
R300,01		VRE0034E102	M.RESISTOR CH 1/10W 1K	2	
R302		ERJ6GEY0R00	M.RESISTOR CH 1/10W 0	1	
R303		ERJ6GEYG272	M.RESISTOR CH 1/10W 2.7K	1	
R306		ERJ6GEYG683	M.RESISTOR CH 1/10W 68K	1	
R307		ERJ6GEYG821	M.RESISTOR CH 1/10W 820	1	
R308		ERJ6GEYG273	M.RESISTOR CH 1/10W 27K	1	
R309		ERJ6GEYG272	M.RESISTOR CH 1/10W 2.7K	1	
R310		ERJ6GEYG682	M.REISITOR CH 1/10W 6.8K	1	
R311		ERJ6GEYG272	M.RESISTOR CH 1/10W 2.7K	1	
R312		ERJ6GEYG222	M.RESISTOR CH 1/10W 2.2K	1	
R313		ERJ6GEYG101	M.RESISTOR CH 1/10W 100	1	
R314		ERJ6GEYG683	M.RESISTOR CH 1/10W 68K	1	
R316-18		VRE0034E301	M.RESISTOR CH 1/10W 300	3	
R320,21		VRE0034E102	M.RESISTOR CH 1/10W 1K	2	
R322		VRE0034E821	M.RESISTOR CH 1/10W 820	1	
R323,24		VRE0034E102	M.RESISTOR CH 1/10W 1K	2	
R326		ERJ6GEY0R00	M.RESISTOR CH 1/10W 0	1	
R327		ERJ6GEYG272	M.RESISTOR CH 1/10W 2.7K	1	
R328		ERJ6GEYG152	M.RESISTOR CH 1/10W 1.5K	1	
R329		ERJ6GEYG471	M.RESISTOR CH 1/10W 470	1	
R330		ERJ6GEYG331	M.RESISTOR CH 1/10W 330	1	
R331		ERJ6GEYG102	M.RESISTOR CH 1/10W 1K	1	
R332		ERJ6GEYG101	M.RESISTOR CH 1/10W 100	1	
R333		ERJ6GEYG102	M.RESISTOR CH 1/10W 1K	1	
R334		ERJ6GEYG101	M.RESISTOR CH 1/10W 100	1	
R335		ERJ6GEYG152	M.RESISTOR CH 1/10W 1.5K	1	
R336		ERJ6GEYG471	M.RESISTOR CH 1/10W 470	1	
R337		ERJ6GEYG222	M.RESISTOR CH 1/10W 2.2K	1	
R338,39		ERJ6GEYG152	M.RESISTOR CH 1/10W 1.5K	2	
R340		ERJ6GEYG101	M.RESISTOR CH 1/10W 100	1	
R341		ERJ6GEYG272	M.RESISTOR CH 1/10W 2.7K	1	
R342		ERJ6GEYG683	M.RESISTOR CH 1/10W 68K	1	
R344,45		ERJ6GEYG103	M.RESISTOR CH 1/10W 10K	2	
R346		ERJ6GEYG102	M.RESISTOR CH 1/10W 1K	1	
R347		ERJ6GEYG470	M.RESISTOR CH 1/10W 47	1	
R348		ERJ6GEYG222	M.RESISTOR CH 1/10W 2.2K	1	
R349		ERJ6GEYG470	M.RESISTOR CH 1/10W 47	1	
R350		ERJ6GEYG152	M.RESISTOR CH 1/10W 1.5K	1	
R351		ERJ6GEYG391	M.RESISTOR CH 1/10W 390	1	
R355		ERJ6GEYG470	M.RESISTOR CH 1/10W 47	1	
R356		ERJ6GEYG222	M.RESISTOR CH 1/10W 2.2K	1	
R357,58		VRE0034E102	M.RESISTOR CH 1/10W 1K	2	
R359		VRE0034E271	M.RESISTOR CH 1/10W 270	1	
R360		ERJ6GEYG272	M.RESISTOR CH 1/10W 2.7K	1	
R364		ERJ6GEYG391	M.RESISTOR CH 1/10W 390	1	
R365		ERJ6GEYG273	M.RESISTOR CH 1/10W 27K	1	
R366		ERJ6GEYG272	M.RESISTOR CH 1/10W 2.7K	1	
R367		ERJ6GEYG682	M.REISITOR CH 1/10W 6.8K	1	
R368		ERJ6GEYG272	M.RESISTOR CH 1/10W 2.7K	1	
R369		ERJ6GEYG222	M.RESISTOR CH 1/10W 2.2K	1	
R370		ERJ6GEYG101	M.RESISTOR CH 1/10W 100	1	
R371		ERJ6GEYG683	M.RESISTOR CH 1/10W 68K	1	
R372		ERJ6GEYG332	M.RESISTOR CH 1/10W 3.3K	1	
R373		ERJ6GEYG562	M.RESISTOR CH 1/10W 5.6K	1	
R374,75		ERJ6GEYG223	M.RESISTOR CH 1/10W 22K	2	
R376		ERJ6GEYG332	M.RESISTOR CH 1/10W 3.3K	1	
R396		ERJ6GEYG332	M.RESISTOR CH 1/10W 3.3K	1	
R397		ERJ6GEYG472	M.RESISTOR CH 1/10W 4.7K	1	
R398		ERJ6GEYG153	M.RESISTOR CH 1/10W 15K	1	
R399		ERJ6GEYG221	M.RESISTOR CH 1/10W 220	1	
R400		ERJ6GEYG472	M.RESISTOR CH 1/10W 4.7K	1	
R401,02		ERJ6GEYG102	M.RESISTOR CH 1/10W 1K	2	
R404		ERJ6GEYG102	M.RESISTOR CH 1/10W 1K	1	
R405,06		ERJ6GEYG221	M.RESISTOR CH 1/10W 220	2	
R409		VRE0034E391	M.RESISTOR CH 1/10W 390	1	
R410		ERJ6GEY0R00	M.RESISTOR CH 1/10W 0	1	
R411		ERJ6GEYG221	M.RESISTOR CH 1/10W 220	1	

Ref.No.		Part No.	Part Name & Description	Pcs	Remarks
R412		VRE0034E391	M.RESISTOR CH 1/10W 390	1	
R413-16		ERJ6GEYG223	M.RESISTOR CH 1/10W 22K	4	
R417		VRE0034E391	M.RESISTOR CH 1/10W 390	1	
R418		ERJ6GEYG151	M.RESISTOR CH 1/10W 150	1	
R421		ERJ6GEYG221	M.RESISTOR CH 1/10W 220	1	
R422		VRE0034E391	M.RESISTOR CH 1/10W 390	1	
R423		ERJ6GEY0R00	M.RESISTOR CH 1/10W 0	1	
R424		ERJ6GEYG101	M.RESISTOR CH 1/10W 100	1	
R425,26		ERJ6GEYG470	M.RESISTOR CH 1/10W 47	2	
R427		ERJ6GEYG221	M.RESISTOR CH 1/10W 220	1	
R428		VRE0034E391	M.RESISTOR CH 1/10W 390	1	
R429		ERJ6GEYG392	M.RESISTOR CH 1/10W 3.9K	1	
R430		ERJ6GEYG102	M.RESISTOR CH 1/10W 1K	1	
R431		VRE0034E821	M.RESISTOR CH 1/10W 820	1	
R432		ERJ6GEYG102	M.RESISTOR CH 1/10W 1K	1	
R433		ERJ6GEYG152	M.RESISTOR CH 1/10W 1.5K	1	
R434		ERJ6GEYG123	M.RESISTOR CH 1/10W 12K	1	
R435		ERJ6GEYG682	M.REISITOR CH 1/10W 6.8K	1	
R436		ERJ6GEYG822	M.RESISTOR CH 1/10W 8.2K	1	
R437		ERJ6GEYG123	M.RESISTOR CH 1/10W 12K	1	
R438		ERJ6GEYG152	M.RESISTOR CH 1/10W 1.5K	1	
R439		ERJ6GEYG102	M.RESISTOR CH 1/10W 1K	1	
R440		VRE0034E821	M.RESISTOR CH 1/10W 820	1	
R441		ERJ6GEYG102	M.RESISTOR CH 1/10W 1K	1	
R442		ERJ6GEYG222	M.RESISTOR CH 1/10W 2.2K	1	
R443		ERJ6GEY0R00	M.RESISTOR CH 1/10W 0	1	
R501		ERJ6GEYG102	M.RESISTOR CH 1/10W 1K	1	
R502		ERJ6GEYG330	M.RESISTOR CH 1/10W 33	1	
R503,04		ERJ6GEYG222	M.RESISTOR CH 1/10W 2.2K	2	
R505,06		ERJ6GEYG102	M.RESISTOR CH 1/10W 1K	2	
R507		ERJ6GEYG331	M.RESISTOR CH 1/10W 330	1	
R508		ERJ6GEYG221	M.RESISTOR CH 1/10W 220	1	
R509		ERJ6GEYG152	M.RESISTOR CH 1/10W 1.5K	1	
R510		ERJ6GEYG391	M.RESISTOR CH 1/10W 390	1	
R511		ERJ6GEYG102	M.RESISTOR CH 1/10W 1K	1	
R512		ERJ6GEYG152	M.RESISTOR CH 1/10W 1.5K	1	
R513		ERJ6GEYG683	M.RESISTOR CH 1/10W 68K	1	
R514		ERJ6GEYG182	M.RESISTOR CH 1/10W 1.8K	1	
R515		ERJ6GEYG101	M.RESISTOR CH 1/10W 100	1	
R516		ERJ6GEYG152	M.RESISTOR CH 1/10W 1.5K	1	
R517		ERJ6GEYG470	M.RESISTOR CH 1/10W 47	1	
R518		ERJ6GEYG273	M.RESISTOR CH 1/10W 27K	1	
R519		ERJ6GEYG331	M.RESISTOR CH 1/10W 330	1	
R520		ERJ6GEYG681	M.RESISTOR CH 1/10W 680	1	
R521		ERJ6GEYG391	M.RESISTOR CH 1/10W 390	1	
R522		ERJ6GEYG102	M.RESISTOR CH 1/10W 1K	1	
R523		ERJ6GEYG681	M.RESISTOR CH 1/10W 680	1	
R524		ERJ6GEYG561	M.RESISTOR CH 1/10W 560	1	
R525		ERJ6GEYG182	M.RESISTOR CH 1/10W 1.8K	1	
R526		ERJ6GEYG470	M.RESISTOR CH 1/10W 47	1	
R527		ERJ6GEYG182	M.RESISTOR CH 1/10W 1.8K	1	
R528		VRE0034E151	M.RESISTOR CH 1/10W 150	1	
R529		ERJ6GEYG152	M.RESISTOR CH 1/10W 1.5K	1	
R530		ERJ6GEYG470	M.RESISTOR CH 1/10W 47	1	
R542		ERJ6GEYG821	M.RESISTOR CH 1/10W 820	1	
R543		ERJ6GEYG392	M.RESISTOR CH 1/10W 3.9K	1	
R544		ERJ6GEYG561	M.RESISTOR CH 1/10W 560	1	
R545		ERJ6GEYG391	M.RESISTOR CH 1/10W 390	1	
R546		ERJ6GEYG561	M.RESISTOR CH 1/10W 560	1	
R547		ERJ6GEYG391	M.RESISTOR CH 1/10W 390	1	
R549		ERJ6GEYG273	M.RESISTOR CH 1/10W 27K	1	
R551		ERJ6GEYG391	M.RESISTOR CH 1/10W 390	1	
R552		ERJ6GEYG102	M.RESISTOR CH 1/10W 1K	1	
R553		ERJ6GEYG681	M.RESISTOR CH 1/10W 680	1	
R554		ERJ6GEYG561	M.RESISTOR CH 1/10W 560	1	
R555		ERJ6GEYG182	M.RESISTOR CH 1/10W 1.8K	1	
R556		ERJ6GEYG470	M.RESISTOR CH 1/10W 47	1	
R557		ERJ6GEYG182	M.RESISTOR CH 1/10W 1.8K	1	
R558		VRE0034E151	M.RESISTOR CH 1/10W 150	1	
R559		ERJ6GEYG152	M.RESISTOR CH 1/10W 1.5K	1	
R560		ERJ6GEYG470	M.RESISTOR CH 1/10W 47	1	
R564		ERJ6GEYG102	M.RESISTOR CH 1/10W 1K	1	
R565		ERJ6GEYG222	M.RESISTOR CH 1/10W 2.2K	1	
R566		ERJ6GEYG182	M.RESISTOR CH 1/10W 1.8K	1	
R567		ERJ6GEYG221	M.RESISTOR CH 1/10W 220	1	

Ref.No.		Part No.	Part Name & Description	Pcs	Remarks
R568		ERJ6GEYG470	M.RESISTOR CH 1/10W 47	1	
R569		ERJ6GEYG153	M.RESISTOR CH 1/10W 15K	1	
R570		ERJ6GEYG223	M.RESISTOR CH 1/10W 22K	1	
R571		ERJ6GEYG470	M.RESISTOR CH 1/10W 47	1	
R572		ERJ6GEYG472	M.RESISTOR CH 1/10W 4.7K	1	
R573,74		ERJ6GEYG102	M.RESISTOR CH 1/10W 1K	2	
R576		ERJ6GEYG103	M.RESISTOR CH 1/10W 10K	1	
R577		ERJ6GEYG102	M.RESISTOR CH 1/10W 1K	1	
R578		ERJ6GEYG472	M.RESISTOR CH 1/10W 4.7K	1	
R579,80		ERJ6GEYG121	M.RESISTOR CH 1/10W 120	2	
R581,82		ERJ6GEYG821	M.RESISTOR CH 1/10W 820	2	
R583		ERJ6GEYG470	M.RESISTOR CH 1/10W 47	1	
R584		ERJ6GEYG153	M.RESISTOR CH 1/10W 15K	1	
R585		ERJ6GEYG223	M.RESISTOR CH 1/10W 22K	1	
R586		ERJ6GEYG470	M.RESISTOR CH 1/10W 47	1	
R587		ERJ6GEYG472	M.RESISTOR CH 1/10W 4.7K	1	
R588		ERJ6GEYG102	M.RESISTOR CH 1/10W 1K	1	
R590		ERJ6GEYG103	M.RESISTOR CH 1/10W 10K	1	
R591		ERJ6GEYG102	M.RESISTOR CH 1/10W 1K	1	
R592		ERJ6GEYG472	M.RESISTOR CH 1/10W 4.7K	1	
R593,94		ERJ6GEYG121	M.RESISTOR CH 1/10W 120	2	
R595,96		ERJ6GEYG821	M.RESISTOR CH 1/10W 820	2	
R597		ERJ6GEYG102	M.RESISTOR CH 1/10W 1K	1	
R598		ERJ6GEYG103	M.RESISTOR CH 1/10W 10K	1	
R599		ERJ6GEYG822	M.RESISTOR CH 1/10W 8.2K	1	
R600		ERJ6GEYG102	M.RESISTOR CH 1/10W 1K	1	
R601,02		VREO034E301	M.RESISTOR CH 1/10W 300	2	
R603		ERJ6GEYG152	M.RESISTOR CH 1/10W 1.5K	1	
R604		ERJ6GEYG151	M.RESISTOR CH 1/10W 150	1	
R605		ERJ6GEYG102	M.RESISTOR CH 1/10W 1K	1	
R606		ERJ6GEYG182	M.RESISTOR CH 1/10W 1.8K	1	
R607		ERJ6GEYG332	M.RESISTOR CH 1/10W 3.3K	1	
R608		ERJ6GEYG470	M.RESISTOR CH 1/10W 47	1	
R609,10		ERJ6GEYG122	M.RESISTOR CH 1/10W 1.2K	2	
R611		ERJ6GEY0R00	M.RESISTOR CH 1/10W 0	1	
R612		ERJ6GEYG272	M.RESISTOR CH 1/10W 2.7K	1	
R613		ERJ6GEYG182	M.RESISTOR CH 1/10W 1.8K	1	
R614		ERJ6GEYG392	M.RESISTOR CH 1/10W 3.9K	1	
R615		ERJ6GEYG151	M.RESISTOR CH 1/10W 150	1	
R616		ERJ6GEYG222	M.RESISTOR CH 1/10W 2.2K	1	
R617		ERJ6GEYG330	M.RESISTOR CH 1/10W 33	1	
R618		ERJ6GEYG222	M.RESISTOR CH 1/10W 2.2K	1	
R619		ERJ6GEYG102	M.RESISTOR CH 1/10W 1K	1	
R620		ERJ6GEYG181	M.RESISTOR CH 1/10W 180	1	
R621		ERJ6GEYG821	M.RESISTOR CH 1/10W 820	1	
R622		ERJ6GEYG152	M.RESISTOR CH 1/10W 1.5K	1	
R623		ERJ6GEYG470	M.RESISTOR CH 1/10W 47	1	
R630		ERJ6GEYG272	M.RESISTOR CH 1/10W 2.7K	1	
R633		ERJ6GEY0R00	M.RESISTOR CH 1/10W 0	1	
R634		ERJ6GEYG683	M.RESISTOR CH 1/10W 68K	1	
R635		ERJ6GEYG104	M.RESISTOR CH 1/10W 100K	1	
R636		ERJ6GEYG562	M.RESISTOR CH 1/10W 5.6K	1	
R637		ERJ6GEYG183	M.RESISTOR CH 1/10W 18K	1	
R642		ERJ6GEYG332	M.RESISTOR CH 1/10W 3.3K	1	
R643		ERJ6GEYG822	M.RESISTOR CH 1/10W 8.2K	1	
R644		ERJ6GEYG133	M.RESISTOR CH 1/10W 13K	1	
R645		ERJ6GEYG182	M.RESISTOR CH 1/10W 1.8K	1	
R646		ERJ6GEYG681	M.RESISTOR CH 1/10W 680	1	
R647		ERJ6GEYG471	M.RESISTOR CH 1/10W 470	1	
R648,49		ERJ6GEYG473	M.RESISTOR CH 1/10W 47K	2	
R650		ERJ6GEYG221	M.RESISTOR CH 1/10W 220	1	
R651		ERJ6GEYG682	M.REISITOR CH 1/10W 6.8K	1	
R652		ERJ6GEYG182	M.RESISTOR CH 1/10W 1.8K	1	
R653		ERJ6GEYG122	M.RESISTOR CH 1/10W 1.2K	1	
R654,55		ERJ6GEYG101	M.RESISTOR CH 1/10W 100	2	
R656		ERJ6GEYG122	M.RESISTOR CH 1/10W 1.2K	1	
R657		ERJ6GEYG182	M.RESISTOR CH 1/10W 1.8K	1	
R658		ERJ6GEYG102	M.RESISTOR CH 1/10W 1K	1	
R659		ERJ6GEYG681	M.RESISTOR CH 1/10W 680	1	
R660		ERJ6GEYG102	M.RESISTOR CH 1/10W 1K	1	
R661		ERJ6GEYG222	M.RESISTOR CH 1/10W 2.2K	1	
R662		ERJ6GEYG182	M.RESISTOR CH 1/10W 1.8K	1	
R663		ERJ6GEYG222	M.RESISTOR CH 1/10W 2.2K	1	
R664		ERJ6GEYG682	M.REISITOR CH 1/10W 6.8K	1	
R665		ERJ6GEYG122	M.RESISTOR CH 1/10W 1.2K	1	

Ref.No.		Part No.	Part Name & Description	Pcs	Remarks
R666		ERJ6GEYG102	M.RESISTOR CH 1/10W 1K	1	
R667		ERJ6GEYG182	M.RESISTOR CH 1/10W 1.8K	1	
R668		ERJ6GEYG102	M.RESISTOR CH 1/10W 1K	1	
R669		ERJ6GEYG681	M.RESISTOR CH 1/10W 680	1	
R670		ERJ6GEYG331	M.RESISTOR CH 1/10W 330	1	
R671		ERJ6GEYG152	M.RESISTOR CH 1/10W 1.5K	1	
R672,73		ERJ6GEYG102	M.RESISTOR CH 1/10W 1K	2	
R674		ERJ6GEYG561	M.RESISTOR CH 1/10W 560	1	
R675		ERJ6GEY0R00	M.RESISTOR CH 1/10W 0	1	
R676		ERJ6GEYG152	M.RESISTOR CH 1/10W 1.5K	1	
R677		ERJ6GEYG102	M.RESISTOR CH 1/10W 1K	1	
R678		ERJ6GEYG152	M.RESISTOR CH 1/10W 1.5K	1	
R679		ERJ6GEYG102	M.RESISTOR CH 1/10W 1K	1	
R680		ERJ6GEYG561	M.RESISTOR CH 1/10W 560	1	
R681		ERJ6GEYG330	M.RESISTOR CH 1/10W 33	1	
R682		ERJ6GEYG681	M.RESISTOR CH 1/10W 680	1	
R683		ERJ6GEYG124	M.RESISTOR CH 1/10W 120K	1	
R684		ERJ6GEYG152	M.RESISTOR CH 1/10W 1.5K	1	
R685		ERJ6GEYG102	M.RESISTOR CH 1/10W 1K	1	
R686		ERJ6GEYG181	M.RESISTOR CH 1/10W 180	1	
R687		ERJ6GEYG102	M.RESISTOR CH 1/10W 1K	1	
R688		ERJ6GEYG561	M.RESISTOR CH 1/10W 560	1	
R689		ERJ6GEYG152	M.RESISTOR CH 1/10W 1.5K	1	
R690,91		ERJ6GEYG122	M.RESISTOR CH 1/10W 1.2K	2	
R692,93		ERJ6GEYG470	M.RESISTOR CH 1/10W 47	2	
R694,95		ERJ6GEYG102	M.RESISTOR CH 1/10W 1K	2	
R696,97		ERJ6GEYG122	M.RESISTOR CH 1/10W 1.2K	2	
R698,99		ERJ6GEYG470	M.RESISTOR CH 1/10W 47	2	
R700,01		ERJ6GEYG102	M.RESISTOR CH 1/10W 1K	2	
R702		ERJ6GEYG103	M.RESISTOR CH 1/10W 10K	1	
R703		ERJ6GEYG472	M.RESISTOR CH 1/10W 4.7K	1	
R704-07		ERJ6GEYG102	M.RESISTOR CH 1/10W 1K	4	
R709		ERJ6GEY0R00	M.RESISTOR CH 1/10W 0	1	
R711		ERJ6GEY0R00	M.RESISTOR CH 1/10W 0	1	
R714,15		ERJ6GEY0R00	M.RESISTOR CH 1/10W 0	2	
R716		ERJ6GEYG101	M.RESISTOR CH 1/10W 100	1	
R717		ERJ6GEYG122	M.RESISTOR CH 1/10W 1.2K	1	
R718		ERJ6GEYG154	M.RESISTOR CH 1/10W 150K	1	
R719		ERJ6GEYG102	M.RESISTOR CH 1/10W 1K	1	
R720		ERJ6GEYG681	M.RESISTOR CH 1/10W 680	1	
R721		ERJ6GEYG470	M.RESISTOR CH 1/10W 47	1	
R722		ERJ6GEYG182	M.RESISTOR CH 1/10W 1.8K	1	
R723		VREO034E151	M.RESISTOR CH 1/10W 150	1	
R724		ERJ6GEYG152	M.RESISTOR CH 1/10W 1.5K	1	
R725		ERJ6GEYG470	M.RESISTOR CH 1/10W 47	1	
R726		ERJ6GEYG472	M.RESISTOR CH 1/10W 4.7K	1	
R727		ERJ6GEYG103	M.RESISTOR CH 1/10W 10K	1	
R728		ERJ6GEYG561	M.RESISTOR CH 1/10W 560	1	
R729		ERJ6GEYG391	M.RESISTOR CH 1/10W 390	1	
R730		ERJ6GEYG561	M.RESISTOR CH 1/10W 560	1	
R731		ERJ6GEYG391	M.RESISTOR CH 1/10W 390	1	
R732		ERJ6GEYG561	M.RESISTOR CH 1/10W 560	1	
R733		ERJ6GEYG391	M.RESISTOR CH 1/10W 390	1	
R734		ERJ6GEYG561	M.RESISTOR CH 1/10W 560	1	
R735		ERJ6GEYG391	M.RESISTOR CH 1/10W 390	1	
R736		ERJ6GEYG101	M.RESISTOR CH 1/10W 100	1	
R737		ERJ6GEYG122	M.RESISTOR CH 1/10W 1.2K	1	
R739,40		ERJ6GEYG152	M.RESISTOR CH 1/10W 1.5K	2	
R741		ERJ6GEYG105	M.RESISTOR CH 1/10W 1M	1	
R742		ERJ6GEYG122	M.RESISTOR CH 1/10W 1.2K	1	
R743		ERJ6GEYG472	M.RESISTOR CH 1/10W 4.7K	1	
R744		ERJ6GEY0R00	M.RESISTOR CH 1/10W 0	1	
R800		ERJ6GEYG223	M.RESISTOR CH 1/10W 22K	1	
R801		ERJ6GEYG562	M.RESISTOR CH 1/10W 5.6K	1	
R802		ERJ6GEYG331	M.RESISTOR CH 1/10W 330	1	
R803		ERJ6GEYG103	M.RESISTOR CH 1/10W 10K	1	
R804		ERJ6GEYG183	M.RESISTOR CH 1/10W 18K	1	
R805		ERJ6GEYG102	M.RESISTOR CH 1/10W 1K	1	
R806		ERJ6GEYG472	M.RESISTOR CH 1/10W 4.7K	1	
R807		ERJ6GEYG152	M.RESISTOR CH 1/10W 1.5K	1	
R808-10		ERJ6GEYG122	M.RESISTOR CH 1/10W 1.2K	3	
R811		ERJ6GEYG222	M.RESISTOR CH 1/10W 2.2K	1	
R812-14		ERJ6GEYG122	M.RESISTOR CH 1/10W 1.2K	3	
R815		ERJ6GEYG222	M.RESISTOR CH 1/10W 2.2K	1	
R816		ERJ6GEYG122	M.RESISTOR CH 1/10W 1.2K	1	

Ref.No.		Part No.	Part Name & Description	Pcs	Remarks
R817		ERJ6GEYG392	M.RESISTOR CH 1/10W 3.9K	1	
R819,20		ERJ6GEYG103	M.RESISTOR CH 1/10W 10K	2	
R821		ERJ6GEYG392	M.RESISTOR CH 1/10W 3.9K	1	
R822,23		ERJ6GEYG103	M.RESISTOR CH 1/10W 10K	2	
R826		ERJ6GEYG153	M.RESISTOR CH 1/10W 15K	1	
R827		ERJ6GEYG392	M.RESISTOR CH 1/10W 3.9K	1	
R828		ERJ6GEYG562	M.RESISTOR CH 1/10W 5.6K	1	
R829		ERJ6GEYG103	M.RESISTOR CH 1/10W 10K	1	
R830		ERJ6GEYG122	M.RESISTOR CH 1/10W 1.2K	1	
R831		ERJ6GEYG222	M.RESISTOR CH 1/10W 2.2K	1	
R832		ERJ6GEYG392	M.RESISTOR CH 1/10W 3.9K	1	
R833		ERJ6GEYG122	M.RESISTOR CH 1/10W 1.2K	1	
R834		ERJ6GEYG182	M.RESISTOR CH 1/10W 1.8K	1	
R835		ERJ6GEYG392	M.RESISTOR CH 1/10W 3.9K	1	
R836		ERJ6GEYG682	M.REISITOR CH 1/10W 6.8K	1	
R837		ERJ6GEYG392	M.RESISTOR CH 1/10W 3.9K	1	
R838		ERJ6GEYG682	M.REISITOR CH 1/10W 6.8K	1	
R839,40		ERJ6GEYG392	M.RESISTOR CH 1/10W 3.9K	2	
R841		ERJ6GEYG682	M.REISITOR CH 1/10W 6.8K	1	
R842		ERJ6GEYG392	M.RESISTOR CH 1/10W 3.9K	1	
R843		ERJ6GEYG682	M.REISITOR CH 1/10W 6.8K	1	
R844-46		ERJ6GEYG392	M.RESISTOR CH 1/10W 3.9K	3	
R847		ERJ6GEY0R00	M.RESISTOR CH 1/10W 0	1	
R848		ERJ6GEYG102	M.RESISTOR CH 1/10W 1K	1	
R849		ERJ6GEY0R00	M.RESISTOR CH 1/10W 0	1	
R850		ERJ6GEYG102	M.RESISTOR CH 1/10W 1K	1	
R851		ERJ6GEY0R00	M.RESISTOR CH 1/10W 0	1	
R852		ERJ6GEYG102	M.RESISTOR CH 1/10W 1K	1	
R853		ERJ6GEY0R00	M.RESISTOR CH 1/10W 0	1	
R854		ERJ6GEYG102	M.RESISTOR CH 1/10W 1K	1	
R855		ERJ6GEY0R00	M.RESISTOR CH 1/10W 0	1	
R856		ERJ6GEYG102	M.RESISTOR CH 1/10W 1K	1	
R857		ERJ6GEY0R00	M.RESISTOR CH 1/10W 0	1	
R858		ERJ6GEYG102	M.RESISTOR CH 1/10W 1K	1	
R859-62		ERJ6GEY0R00	M.RESISTOR CH 1/10W 0	4	
R867		ERJ6GEYG104	M.RESISTOR CH 1/10W 100K	1	
R868		ERJ6GEYG562	M.RESISTOR CH 1/10W 5.6K	1	
R869		ERJ6GEYG273	M.RESISTOR CH 1/10W 27K	1	
R870		ERJ6GEYG472	M.RESISTOR CH 1/10W 4.7K	1	
R871		ERJ6GEYG562	M.RESISTOR CH 1/10W 5.6K	1	
R872		ERJ6GEYG273	M.RESISTOR CH 1/10W 27K	1	
R873		ERJ6GEY0R00	M.RESISTOR CH 1/10W 0	1	
R876		ERJ6GEY0R00	M.RESISTOR CH 1/10W 0	1	
R878		ERJ6GEY0R00	M.RESISTOR CH 1/10W 0	1	
R880		ERJ6GEY0R00	M.RESISTOR CH 1/10W 0	1	
R882		ERJ6GEY0R00	M.RESISTOR CH 1/10W 0	1	
R883,84		ERJ6GEYG103	M.RESISTOR CH 1/10W 10K	2	
R886,87		ERJ6GEY0R00	M.RESISTOR CH 1/10W 0	2	
R889,90		ERJ6GEYG392	M.RESISTOR CH 1/10W 3.9K	2	
R891		ERJ6GEYG563	M.RESISTOR CH 1/10W 56K	1	
R892		ERJ6GEYG472	M.RESISTOR CH 1/10W 4.7K	1	
R893		ERJ6GEYG272	M.RESISTOR CH 1/10W 2.7K	1	
R894		ERJ6GEYG102	M.RESISTOR CH 1/10W 1K	1	
R895		ERJ6GEYG103	M.RESISTOR CH 1/10W 10K	1	
R896		ERJ6GEYG122	M.RESISTOR CH 1/10W 1.2K	1	
R897		ERJ6GEYG222	M.RESISTOR CH 1/10W 2.2K	1	
R898,99		ERJ6GEYG273	M.RESISTOR CH 1/10W 27K	2	
R900		ERJ6GEYG332	M.RESISTOR CH 1/10W 3.3K	1	
R901-05		ERJ6GEYG103	M.RESISTOR CH 1/10W 10K	5	
R906		ERJ6GEYG224	M.RESISTOR CH 1/10W 220K	1	
R907-09		ERJ6GEYG103	M.RESISTOR CH 1/10W 10K	3	
R910		ERJ6GEYG152	M.RESISTOR CH 1/10W 1.5K	1	
R911		ERJ6GEYG392	M.RESISTOR CH 1/10W 3.9K	1	
R912-16		ERJ6GEYG103	M.RESISTOR CH 1/10W 10K	5	
R917		ERJ6GEYG562	M.RESISTOR CH 1/10W 5.6K	1	
R925,26		ERJ6GEYG122	M.RESISTOR CH 1/10W 1.2K	2	
R928		ERJ6GEYG562	M.RESISTOR CH 1/10W 5.6K	1	
R929,30		ERJ6GEYG392	M.RESISTOR CH 1/10W 3.9K	2	
R1001		ERJ6GEYG681	M.RESISTOR CH 1/10W 680	1	
R1002		ERJ6GEYG621	M.RESISTOR CH 1/10W 620	1	
SW201		VSS0207	SWITCH	1	
SW202,03		VJP1990	CONNECTOR	2	

Ref.No.		Part No.	Part Name & Description	Pcs	Remarks
SW800		VSS0126	SWITCH	1	
SW801		VJP1990	CONNECTOR	1	
SWS801		VJS1990	CONNECTOR	1	
TH501-04		ERTD2FGL102S	THERMISTOR 1K	4	
TP1-P4		VJR0646	TEST POINT	4	
TP6,P7		VJR0646	TEST POINT	2	
TP201-04		VJR0646	TEST POINT	4	
TP206		VJR0646	TEST POINT	1	
TP501-03		VJR0646	TEST POINT	3	
TP505-07		VJR0646	TEST POINT	3	
TP800-03		VJR0646	TEST POINT	4	
TP805		VJR0646	TEST POINT	1	
TPG1,G2		VJR0646	TEST POINT	2	
TPG201		VJR0646	TEST POINT	1	
TPG501		VJR0646	TEST POINT	1	
VC201		ECV1ZW20X60	V.CAPACITOR 20P	1	
VC501		ECV1ZW30X53	V.CAPACITOR 30P	1	
VR1		VRV0109B201	V.RESISTOR 200	1	
VR2		VRV0109B502	V.RESISTOR 5K	1	
VR3		VRV0109B501	V.RESISTOR 500	1	
VR4		VRV0109B502	V.RESISTOR 5K	1	
VR200		VRV0064B501	V.RESISTOR 500	1	
VR201		VRV0064B503	V.RESISTOR 50K	1	
VR202		VRV0064B103	V.RESISTOR 10K	1	
VR203		VRV0109B501	V.RESISTOR 500	1	
VR204		VRV0109B503	V.RESISTOR 50K	1	
VR205		VRV0109B501	V.RESISTOR 500	1	
VR206		VRV0109B503	V.RESISTOR 50K	1	
VR207		VRV0109B102	V.RESISTOR 1K	1	
VR208,09		VRV0109B501	V.RESISTOR 500	2	
VR210-13		VRV0109B102	V.RESISTOR 1K	4	
VR501		VRV0109B501	V.RESISTOR 500	1	
VR502		VRV0109B503	V.RESISTOR 50K	1	
VR503-06		VRV0064B503	V.RESISTOR 50K	4	
VR507		VRV0109B201	V.RESISTOR 200	1	
VR508		VRV0109B101	V.RESISTOR 100	1	
VR509		VRV0109B201	V.RESISTOR 200	1	
VR510		VRV0109B203	V.RESISTOR 20K	1	
VR511		VRV0109B502	V.RESISTOR 5K	1	
VR512		VRV0064B503	V.RESISTOR 50K	1	
VR513,14		VRV0109B102	V.RESISTOR 1K	2	
VR515,16		VRV0109B501	V.RESISTOR 500	2	
VR517		VRV0064B503	V.RESISTOR 50K	1	
VR800,01		VRV0109B202	V.RESISTOR 2K	1	
VR802,03		VRV0109B203	V.RESISTOR 20K	2	
			MISCELLANEOUS		
		VML2143	CARD PULLER	1	
		VML2144	CARD PULLER	1	
		VMZ1547	BARRIER	1	
		VXA3966	P.C.B. SHIELD	1	
		XNG26E	NUT	4	
		XYNV3+K6FR	SCREW	5	
		XYN26+C12	SCREW	4	

Ref.No.		Part No.	Part Name & Description	Pcs	Remarks
	■	VEP88063Q	P.C.BOARD W/COMPONENT		FOR AU-62H
			W2 ENCODER		
	■	VEP80632A	P.C.BOARD W/COMPONENT		FOR VEP88063Q
			W2 SUB		
			CAPACITORS		
C1		ECUM1H103KBN	C.CAPACITOR CH 50V 0.01U	1	
C2		ECEA1CU221	E.CAPACITOR 16V 220U	1	
C3		ECUM1H103KBN	C.CAPACITOR CH 50V 0.01U	1	
C4		ECEA0JU101	E.CAPACITOR 6.3V 100U	1	
C5		ECUM1H103KBN	C.CAPACITOR CH 50V 0.01U	1	
C6		ECEA1CU221	E.CAPACITOR 16V 220U	1	
C7-C9		ECUM1H103KBN	C.CAPACITOR CH 50V 0.01U	3	
C10		ECUM1H103KBN	C.CAPACITOR CH 50V 0.01U	1	
C11		ECEA1AU101	E.CAPACITOR 10V 100U	1	
C12,13		ECUM1H103KBN	C.CAPACITOR CH 50V 0.01U	2	
C14		ECEA1AU101	E.CAPACITOR 10V 100U	1	
C15		ECUM1H470JCN	C.CAPACITOR CH 50V 47P	1	
C16		ECUM1H103KBN	C.CAPACITOR CH 50V 0.01U	1	
C17		ECUM1H120JCN	C.CAPACITOR CH 50V 12P	1	
C18		ECUM1H103KBN	C.CAPACITOR CH 50V 0.01U	1	
C19,20		ECEA1CU221	E.CAPACITOR 16V 220U	2	
C21,22		ECUM1H103KBN	C.CAPACITOR CH 50V 0.01U	2	
C23		ECUM1H470JCN	C.CAPACITOR CH 50V 47P	1	
C24,25		ECUM1H151JCN	C.CAPACITOR CH 50V 150P	1	
C26		ECUM1E104ZFN	C.CAPACITOR CH 25V 0.1U	1	
C27		ECUM1H270JCN	C.CAPACITOR CH 50V 27P	1	
C28		ECQM1H183JF	P.CAPACITOR 50V 0.018U	1	
C29		ECUM1H103KBN	C.CAPACITOR CH 50V 0.01U	1	
C30		ECEA1EN4R7S	E.CAPACITOR 25V 4.7U	1	
C31		ECEA1HN2R2S	E.CAPACITOR 50V 2.2U	1	
C32		ECUM1H103KBN	C.CAPACITOR CH 50V 0.01U	1	
C33		ECEA0JU101	E.CAPACITOR 6.3V 100U	1	
C35		ECEA0JU221	E.CAPACITOR 6.3V 220U	1	
C36		ECUM1H103KBN	C.CAPACITOR CH 50V 0.01U	1	
C37		ECEA0JU221	E.CAPACITOR 6.3V 220U	1	
C38-46		ECUM1H103KBN	C.CAPACITOR CH 50V 0.01U	9	
C49,50		ECUM1H103KBN	C.CAPACITOR CH 50V 0.01U	2	
C51		ECEA1AU101	E.CAPACITOR 10V 100U	1	
C52		ECUM1E104ZFN	C.CAPACITOR CH 25V 0.1U	1	
C53		ECUM1H103KBN	C.CAPACITOR CH 50V 0.01U	1	
C54		ECEA1AU101	E.CAPACITOR 10V 100U	1	
C55		ECUM1H220JCN	C.CAPACITOR CH 50V 22P	1	
C56		ECUM1H103KBN	C.CAPACITOR CH 50V 0.01U	1	
C57		ECUM1H150JCN	C.CAPACITOR CH 50V 15P	1	
C58		ECUM1H103KBN	C.CAPACITOR CH 50V 0.01U	1	
C59		ECEA0JU101	E.CAPACITOR 6.3V 100U	1	
C60		ECUM1H120JCN	C.CAPACITOR CH 50V 12P	1	
C61		ECEA0JU221	E.CAPACITOR 6.3V 220U	1	
C62		ECUM1H103KBN	C.CAPACITOR CH 50V 0.01U	1	
C63		ECEA0JU221	E.CAPACITOR 6.3V 220U	1	
C64-73		ECUM1H103KBN	C.CAPACITOR CH 50V 0.01U	10	
C76		ECUM1H270JCN	C.CAPACITOR CH 50V 27P	1	
C77		ECUM1E104ZFN	C.CAPACITOR CH 25V 0.1U	1	
C78		ECQM1H223JF	P.CAPACITOR 50V 0.022U	1	
C79		ECUM1H103KBN	C.CAPACITOR CH 50V 0.01U	1	
C80,81		ECEA1HN2R2S	E.CAPACITOR 50V 2.2U	2	
C82,83		ECUM1E104ZFN	C.CAPACITOR CH 25V 0.1U	2	
C84		ECEA0JU470	E.CAPACITOR 6.3V 47U	1	
C85,86		ECUM1E104ZFN	C.CAPACITOR CH 25V 0.1U	2	
C87		ECUM1H103KBN	C.CAPACITOR CH 50V 0.01U	1	
C88		ECUM1E104ZFN	C.CAPACITOR CH 25V 0.1U	1	
C89		ECKF1H103ZF	C.CAPACITOR 50V 0.01U	1	
C113		ECUM1E104ZFN	C.CAPACITOR CH 25V 0.1U	1	
C114-17		ECUM1H103KBN	C.CAPACITOR CH 50V 0.01U	4	
C120		ECUM1H103KBN	C.CAPACITOR CH 50V 0.01U	1	
C121		ECEA1AU470	E.CAPACITOR 10V 47U	1	
C122		ECUM1H103KBN	C.CAPACITOR CH 50V 0.01U	1	
C123		ECUM1C104KBN	C.CAPACITOR CH 16V 0.1U	1	
C124		ECUM1H181JCN	C.CAPACITOR CH 50V 180P	1	

Ref.No.		Part No.	Part Name & Description	Pcs	Remarks
C125		ECUM1E104ZFN	C.CAPACITOR CH 25V 0.1U	1	
C126		ECUM1C104KBN	C.CAPACITOR CH 16V 0.1U	1	
C127		ECUM1H180JCN	C.CAPACITOR CH 50V 18P	1	
C128		ECUM1H680JCN	C.CAPACITOR CH 50V 68P	1	
C129,30		ECUM1C104KBN	C.CAPACITOR CH 16V 0.1U	2	
C131		ECEA1HN010S	E.CAPACITOR 50V 1U	1	
C132		ECUM1H103KBN	C.CAPACITOR CH 50V 0.01U	1	
C133		ECEA1AU470	E.CAPACITOR 10V 47U	1	
C134		ECUM1E104ZFN	C.CAPACITOR CH 25V 0.1U	1	
C135		ECUM1H391JCN	C.CAPACITOR CH 50V 390P	1	
C136		ECUM1H151JCN	C.CAPACITOR CH 50V 150P	1	
C137		ECUM1H121JCN	C.CAPACITOR CH 50V 120P	1	
C138		ECUM1H391JCN	C.CAPACITOR CH 50V 390P	1	
C139-41		ECUM1H103KBN	C.CAPACITOR CH 50V 0.01U	3	
C142		ECEA1AU470	E.CAPACITOR 10V 47U	1	
C143,44		ECUM1C104KBN	C.CAPACITOR CH 16V 0.1U	2	
C145		ECUM1H121JCN	C.CAPACITOR CH 50V 120P	1	
C146		ECUM1E104ZFN	C.CAPACITOR CH 25V 0.1U	1	
C147-49		ECUM1C104KBN	C.CAPACITOR CH 16V 0.1U	3	
C150		ECEA1HN010S	E.CAPACITOR 50V 1U	1	
C151		ECUM1H103KBN	C.CAPACITOR CH 50V 0.01U	1	
C152		ECEA1AU470	E.CAPACITOR 10V 47U	1	
C154		ECUM1E104ZFN	C.CAPACITOR CH 25V 0.1U	1	
C155		ECUM1H391JCN	C.CAPACITOR CH 50V 390P	1	
C156		ECUM1H151JCN	C.CAPACITOR CH 50V 150P	1	
C157		ECUM1H121JCN	C.CAPACITOR CH 50V 120P	1	
C158		ECUM1H391JCN	C.CAPACITOR CH 50V 390P	1	
C159,60		ECUM1H821JCN	C.CAPACITOR CH 50V 820P	2	
C161,62		ECEA1AN470S	E.CAPACITOR 10V 47U	2	
C163		ECEA1CU470	E.CAPACITOR 16V 47U	1	
C164		ECQM1H104JF	P.CAPACITOR 50V 0.1U	1	
C165		ECEA1AN470S	E.CAPACITOR 10V 47U	1	
C166		ECUM1H221JCN	C.CAPACITOR CH 50V 220P	1	
C200		ECUM1H103KBN	C.CAPACITOR CH 50V 0.01U	1	
C201		ECEA1AU101	E.CAPACITOR 10V 100U	1	
C202,03		ECUM1H103KBN	C.CAPACITOR CH 50V 0.01U	2	
C204		ECEA1AU101	E.CAPACITOR 10V 100U	1	
C205		ECUM1H103KBN	C.CAPACITOR CH 50V 0.01U	1	
C206		ECUM1H150JCN	C.CAPACITOR CH 50V 15P	1	
C207		ECUM1H470JCN	C.CAPACITOR CH 50V 47P	1	
C209		ECUM1H220JCN	C.CAPACITOR CH 50V 22P	1	
C210		ECUM1H100DCN	C.CAPACITOR CH 50V 10P	1	
C211		ECUM1C104KBN	C.CAPACITOR CH 16V 0.1U	1	
C212		ECUM1E104ZFN	C.CAPACITOR CH 25V 0.1U	1	
C213		ECUM1H221JCN	C.CAPACITOR CH 50V 220P	1	
C214		ECUM1H270JCN	C.CAPACITOR CH 50V 27P	1	
C215		ECUM1H103KBN	C.CAPACITOR CH 50V 0.01U	1	
C219		ECUM1H560JCN	C.CAPACITOR CH 50V 56P	1	
C220		ECUM1E104ZFN	C.CAPACITOR CH 25V 0.1U	1	
C223		ECUM1H221JCN	C.CAPACITOR CH 50V 220P	1	
C224		ECUM1H030DCN	C.CAPACITOR CH 50V 3P	1	
C226		ECEA1HNR47S	E.CAPACITOR 50V 0.47U	1	
C227,28		ECUM1H103KBN	C.CAPACITOR CH 50V 0.01U	2	
C229		ECEA1AU101	E.CAPACITOR 10V 100U	1	
C230,31		ECUM1H103KBN	C.CAPACITOR CH 50V 0.01U	2	
C232		ECEA1AU101	E.CAPACITOR 10V 100U	1	
C233		ECUM1H103KBN	C.CAPACITOR CH 50V 0.01U	1	
C235		ECUM1H120JCN	C.CAPACITOR CH 50V 12P	1	
C236		ECUM1H560JCN	C.CAPACITOR CH 50V 56P	1	
C238		ECUM1H100DCN	C.CAPACITOR CH 50V 10P	1	
C239		ECUM1H680JCN	C.CAPACITOR CH 50V 68P	1	
C240		ECUM1H330JCN	C.CAPACITOR CH 50V 33P	1	
C241		ECUM1H100DCN	C.CAPACITOR CH 50V 10P	1	
C242		ECEA1HNR47S	E.CAPACITOR 50V 0.47U	1	
C243		ECUM1C104KBN	C.CAPACITOR CH 16V 0.1U	1	
C244		ECUM1E104ZFN	C.CAPACITOR CH 25V 0.1U	1	
C245		ECUM1H103KBN	C.CAPACITOR CH 50V 0.01U	1	
C247		ECUM1H103KBN	C.CAPACITOR CH 50V 0.01U	1	
C248		ECEA0JU470	E.CAPACITOR 6.3V 47U	1	
C249		ECUM1H103KBN	C.CAPACITOR CH 50V 0.01U	1	
C257,58		ECUM1E104ZFN	C.CAPACITOR CH 25V 0.1U	2	
C260		ECUM1H221JCN	C.CAPACITOR CH 50V 220P	1	
C261		ECUM1H030DCN	C.CAPACITOR CH 50V 3P	1	
C263		ECUM1H103KBN	C.CAPACITOR CH 50V 0.01U	1	
C264		ECEA1HNR47S	E.CAPACITOR 50V 0.47U	1	

Ref.No.		Part No.	Part Name & Description	Pcs	Remarks
C266,67		ECUM1E104ZFN	C.CAPACITOR CH 25V 0.1U	2	
C268		ECUM1H103KBN	C.CAPACITOR CH 50V 0.01U	1	
C269		ECEA1AU101	E.CAPACITOR 10V 100U	1	
C270,71		ECUM1H103KBN	C.CAPACITOR CH 50V 0.01U	2	
C272		ECEA1AU101	E.CAPACITOR 10V 100U	1	
C273		ECUM1H103KBN	C.CAPACITOR CH 50V 0.01U	1	
C275		ECUM1H120JCN	C.CAPACITOR CH 50V 12P	1	
C276		ECUM1H560JCN	C.CAPACITOR CH 50V 56P	1	
C278		ECUM1H100DCN	C.CAPACITOR CH 50V 10P	1	
C279		ECUM1H680JCN	C.CAPACITOR CH 50V 68P	1	
C280		ECUM1H330JCN	C.CAPACITOR CH 50V 33P	1	
C281		ECUM1H100DCN	C.CAPACITOR CH 50V 10P	1	
C282		ECUM1C104KBN	C.CAPACITOR CH 16V 0.1U	1	
C283		ECUM1E104ZFN	C.CAPACITOR CH 25V 0.1U	1	
C284		ECUM1H103KBN	C.CAPACITOR CH 50V 0.01U	1	
C291		ECUM1H103KBN	C.CAPACITOR CH 50V 0.01U	1	
C292		ECEA1CU221	E.CAPACITOR 16V 220U	1	
C293		ECUM1H103KBN	C.CAPACITOR CH 50V 0.01U	1	
C294		ECEA0JU101	E.CAPACITOR 6.3V 100U	1	
C297,98		ECUM1E104ZFN	C.CAPACITOR CH 25V 0.1U	2	
C299		ECUM1H103KBN	C.CAPACITOR CH 50V 0.01U	1	
C300		ECEA1AU101	E.CAPACITOR 10V 100U	1	
C301		ECUM1H103KBN	C.CAPACITOR CH 50V 0.01U	1	
C303		ECUM1H271JCN	C.CAPACITOR CH 50V 270P	1	
C304		ECUM1H330JCN	C.CAPACITOR CH 50V 33P	1	
C305,06		ECEA1HNR47S	E.CAPACITOR 50V 0.47U	2	
C307,08		ECQM1H104JF	P.CAPACITOR 50V 0.1U	2	
C311		ECUM1H560JCN	C.CAPACITOR CH 50V 56P	1	
C312,13		ECUM1H120JCN	C.CAPACITOR CH 50V 12P	2	
C314		ECUM1H560JCN	C.CAPACITOR CH 50V 56P	1	
C501,02		ECEA1CU101	E.CAPACITOR 16V 100U	2	
C503		ECUM1H330JCN	C.CAPACITOR CH 50V 33P	1	
C504		ECUM1C104KBN	C.CAPACITOR CH 16V 0.1U	1	
C505		ECUM1H103KBN	C.CAPACITOR CH 50V 0.01U	1	
C506		ECEA1HNR47S	E.CAPACITOR 50V 0.47U	1	
C507,08		ECUM1H103KBN	C.CAPACITOR CH 50V 0.01U	2	
C510		ECUM1H103KBN	C.CAPACITOR CH 50V 0.01U	1	
C517		ECUM1H103KBN	C.CAPACITOR CH 50V 0.01U	1	
C518		ECUM1H330JCN	C.CAPACITOR CH 50V 33P	1	
C519,20		ECUM1H103KBN	C.CAPACITOR CH 50V 0.01U	2	
C521		ECEA0JU470	E.CAPACITOR 6.3V 47U	1	
C522		ECUM1H220JCN	C.CAPACITOR CH 50V 22P	1	
C523		ECUM1H181JCN	C.CAPACITOR CH 50V 180P	1	
C524		ECUM1H103KBN	C.CAPACITOR CH 50V 0.01U	1	
C525		ECEA0JU101	E.CAPACITOR 6.3V 100U	1	
C526		ECUM1H103KBN	C.CAPACITOR CH 50V 0.01U	1	
C527,28		ECEA1CU101	E.CAPACITOR 16V 100U	2	
C531		ECEA1CU101	E.CAPACITOR 16V 100U	1	
C532		ECUM1H103KBN	C.CAPACITOR CH 50V 0.01U	1	
C533		ECEA1CU101	E.CAPACITOR 16V 100U	1	
C534,35		ECUM1H103KBN	C.CAPACITOR CH 50V 0.01U	2	
C536,37		ECUM1H560JCN	C.CAPACITOR CH 50V 56P	2	
C538,39		ECUM1H103KBN	C.CAPACITOR CH 50V 0.01U	2	
C540		ECUM1E104ZFN	C.CAPACITOR CH 25V 0.1U	1	
C541		ECUM1H270JCN	C.CAPACITOR CH 50V 27P	1	
C542		ECUM1H221JCN	C.CAPACITOR CH 50V 220P	1	
C543		ECUM1H120JCN	C.CAPACITOR CH 50V 12P	1	
C546		ECUM1H101JCN	C.CAPACITOR CH 50V 100P	1	
C547		ECUM1H470JCN	C.CAPACITOR CH 50V 47P	1	
C548		ECUM1H100DCN	C.CAPACITOR CH 50V 10P	1	
C549		ECUM1H330JCN	C.CAPACITOR CH 50V 33P	1	
C550		ECUM1H103KBN	C.CAPACITOR CH 50V 0.01U	1	
C551		ECUM1H471JCN	C.CAPACITOR CH 50V 470P	1	
C552		ECUM1H270JCN	C.CAPACITOR CH 50V 27P	1	
C553		ECUM1H103KBN	C.CAPACITOR CH 50V 0.01U	1	
C554		ECUM1E104ZFN	C.CAPACITOR CH 25V 0.1U	1	
C555		ECUM1H103KBN	C.CAPACITOR CH 50V 0.01U	1	
C559		ECEA0JU470	E.CAPACITOR 6.3V 47U	1	
C560		ECUM1H103KBN	C.CAPACITOR CH 50V 0.01U	1	
C561		ECEA0JN330S	E.CAPACITOR 6.3V 33U	1	
C562		ECUM1H680JCN	C.CAPACITOR CH 50V 68P	1	
C563		ECUM1H271JCN	C.CAPACITOR CH 50V 270P	1	
C564		ECUM1H151JCN	C.CAPACITOR CH 50V 150P	1	
C565		ECUM1H471JCN	C.CAPACITOR CH 50V 470P	1	
C566		ECEA1CU470	E.CAPACITOR 16V 47U	1	

Ref.No.		Part No.	Part Name & Description	Pcs	Remarks
C567-69		ECUM1H103KBN	C.CAPACITOR CH 50V 0.01U	3	
C570		ECEA1CU470	E.CAPACITOR 16V 47U	1	
C571		ECUM1H103KBN	C.CAPACITOR CH 50V 0.01U	1	
C572		ECUM1E104ZFN	C.CAPACITOR CH 25V 0.1U	1	
C573		ECUM1H103KBN	C.CAPACITOR CH 50V 0.01U	1	
C574,75		ECUM1H220JCN	C.CAPACITOR CH 50V 22P	2	
C576,77		ECUM1H103KBN	C.CAPACITOR CH 50V 0.01U	2	
C578		ECEA0JU101	E.CAPACITOR 6.3V 100U	1	
C579		ECUM1E104ZFN	C.CAPACITOR CH 25V 0.1U	1	
C580,81		ECUM1H220JCN	C.CAPACITOR CH 50V 22P	2	
C582		ECEA0JU101	E.CAPACITOR 6.3V 100U	1	
C583		ECUM1E104ZFN	C.CAPACITOR CH 25V 0.1U	1	
C584		ECUM1H103KBN	C.CAPACITOR CH 50V 0.01U	1	
C585		ECUM1H820JCN	C.CAPACITOR CH 50V 82P	1	
C586		ECUM1H100DCN	C.CAPACITOR CH 50V 10P	1	
C587,88		ECUM1H103KBN	C.CAPACITOR CH 50V 0.01U	2	
C589		ECUM1H271JCN	C.CAPACITOR CH 50V 270P	1	
C590		ECUM1H221JCN	C.CAPACITOR CH 50V 220P	1	
C591		ECUM1H820JCN	C.CAPACITOR CH 50V 82P	1	
C592-97		ECUM1H103KBN	C.CAPACITOR CH 50V 0.01U	6	
C598		ECEA1CU101	E.CAPACITOR 16V 100U	1	
C599,00		ECUM1H103KBN	C.CAPACITOR CH 50V 0.01U	2	
C601		ECEA1CU101	E.CAPACITOR 16V 100U	1	
C602		ECUM1H103KBN	C.CAPACITOR CH 50V 0.01U	1	
C603		ECEA1AU101	E.CAPACITOR 10V 100U	1	
C604		ECUM1H103KBN	C.CAPACITOR CH 50V 0.01U	1	
C605		ECEA1AU101	E.CAPACITOR 10V 100U	1	
C606		ECUM1H103KBN	C.CAPACITOR CH 50V 0.01U	1	
C607		ECEA0JU101	E.CAPACITOR 6.3V 100U	1	
C608		ECUM1H103KBN	C.CAPACITOR CH 50V 0.01U	1	
C609		ECEA0JU101	E.CAPACITOR 6.3V 100U	1	
C610		ECUM1H103KBN	C.CAPACITOR CH 50V 0.01U	1	
C611		ECUM1E104ZFN	C.CAPACITOR CH 25V 0.1U	1	
C612		ECUM1H103KBN	C.CAPACITOR CH 50V 0.01U	1	
C615-18		ECUM1H103KBN	C.CAPACITOR CH 50V 0.01U	4	
C619		ECUM1H221JCN	C.CAPACITOR CH 50V 220P	1	
C620		ECQM1H104JF	P.CAPACITOR 50V 0.1U	1	
C621		ECEA1CU100	E.CAPACITOR 16V 10U	1	
C622		ECQM1H104JF	P.CAPACITOR 50V 0.1U	1	
C623		ECEA1CU470	E.CAPACITOR 16V 47U	1	
C624		ECQM1H104JF	P.CAPACITOR 50V 0.1U	1	
C625		ECEA1CU470	E.CAPACITOR 16V 47U	1	
C626		ECQM1H104JF	P.CAPACITOR 50V 0.1U	1	
C627,28		ECUM1H122JN	C.CAPACITOR CH 50V 1200P	2	
C629		ECUM1H221JCN	C.CAPACITOR CH 50V 220P	1	
C630,31		ECUM1H122JN	C.CAPACITOR CH 50V 1200P	2	
C632		ECUM1H103KBN	C.CAPACITOR CH 50V 0.01U	1	
C634		ECUM1H270JCN	C.CAPACITOR CH 50V 27P	1	
C635		ECCF1H120JC	C.CAPACITOR 50V 12P	1	
C800		ECUM1H122JN	C.CAPACITOR CH 50V 1200P	1	
C801		ECUM1H151JCN	C.CAPACITOR CH 50V 150P	1	
C802		ECQM1H122JF	P.CAPACITOR 50V 1200P	1	
C803		ECQV1H684JZ	P.CAPACITOR 50V 0.68U	1	
C804-06		ECUM1H151JCN	C.CAPACITOR CH 50V 150P	3	
C808		ECUM1H151JCN	C.CAPACITOR CH 50V 150P	1	
C809,10		ECUM1H122JN	C.CAPACITOR CH 50V 1200P	2	
C812		ECUM1H103KBN	C.CAPACITOR CH 50V 0.01U	1	
C813		ECUM1H101JCN	C.CAPACITOR CH 50V 100P	1	
C814-22		ECUM1H122JN	C.CAPACITOR CH 50V 1200P	9	
C823-25		ECUM1E104ZFN	C.CAPACITOR CH 25V 0.1U	3	
C827		ECEA0JU101	E.CAPACITOR 6.3V 100U	1	
C828,29		ECUM1H101JCN	C.CAPACITOR CH 50V 100P	2	
C830		ECUM1H820JCN	C.CAPACITOR CH 50V 82P	1	
C831		ECUM1H103KBN	C.CAPACITOR CH 50V 0.01U	1	
C832		ECUM1E104ZFN	C.CAPACITOR CH 25V 0.1U	1	
C834		ECEA1CN100S	E.CAPACITOR 16V 10U	1	
C835		ECEA1EN4R7S	E.CAPACITOR 25V 4.7U	1	
C836		ECEA0JN330S	E.CAPACITOR 6.3V 33U	1	
C837		ECEA1EN4R7S	E.CAPACITOR 25V 4.7U	1	
C838		ECUM1E104ZFN	C.CAPACITOR CH 25V 0.1U	1	
C841		ECUM1H103KBN	C.CAPACITOR CH 50V 0.01U	1	
C842		ECEA0JU101	E.CAPACITOR 6.3V 100U	1	
C843,44		ECUM1H103KBN	C.CAPACITOR CH 50V 0.01U	2	
C845		ECEA0JU101	E.CAPACITOR 6.3V 100U	1	
C846,47		ECUM1H103KBN	C.CAPACITOR CH 50V 0.01U	2	

Ref.No.		Part No.	Part Name & Description	Pcs	Remarks
C848		ECEA0JU101	E.CAPACITOR 6.3V 100U	1	
C849		ECUM1H103KBN	C.CAPACITOR CH 50V 0.01U	1	
C850		ECEA0JU101	E.CAPACITOR 6.3V 100U	1	
C851		ECUM1H820JCN	C.CAPACITOR CH 50V 82P	1	
C852		ECUM1H103KBN	C.CAPACITOR CH 50V 0.01U	1	
C853		ECUM1H122JN	C.CAPACITOR CH 50V 1200P	1	
C854		ECQB1H272JF	P.CAPACITOR 50V 2700P	1	
C855,56		ECCF1H331JC	C.CAPACITOR 50V 330P	2	
C857		ECCF1H330JC	C.CAPACITOR 50V 33P	1	
C1001		ECEA1HU010	E.CAPACITOR 50V 1U	1	
C1003,04		ECEA1CN100S	E.CAPACITOR 16V 10U	2	
C1005		ECUM1H221JCN	C.CAPACITOR CH 50V 220P	1	
C1006		ECUM1H470JCN	C.CAPACITOR CH 50V 47P	1	
D1		1SZ51	DIODE	1	
D2		MA153	DIODE	1	
D4		MA153	DIODE	1	
D8		MA151WK	DIODE	1	
D11		MA151WK	DIODE	1	
D200,01		RD4.7EB2	ZENER 4.7V	2	
D203,04		MA151K	DIODE	2	
D210		MA151K	DIODE	1	
D501		RD3.6EB	ZENER 3.6V	1	
D508		RD4.7EB2	ZENER 4.7V	1	
D510,11		MA335-R	DIODE	2	
D512		MA153	DIODE	1	
D514		MA151K	DIODE	1	
D800		MA704	DIODE	1	
D801		MA153	DIODE	1	
D802		MA151K	DIODE	1	
FL1		VLF0650	FILTER	1	
FL3		VLF0754	FILTER	1	
FL200		VLF0712	FILTER	1	
FL201,02		VLF0753	FILTER	2	
IC1		AN78N09	IC	1	
IC1		MC10107L	IC	1	
IC2		AN79N09	IC	1	
IC3		MC74HC4053F	IC	1	
IC4-C6		TL082CPS	IC	3	
IC7		HA19211BNT	IC	1	
IC8		MC74HC574AF	IC	1	
IC9		TL082CPS	IC	1	
IC10-12		TL082CPS	IC	3	
IC13		HA19211BNT	IC	1	
IC14		MC74HC574AF	IC	1	
IC15		AN78N09	IC	1	
IC16		AN79N09	IC	1	
IC17		AN79L05	IC	1	
IC18,19		AN78N05	IC	2	
IC26,27		AN91A12S	IC	2	
IC28		MC74HC08AF	IC	1	
IC29		SN74LS123NS	IC	1	
IC30		NE521D	IC	1	
IC32		AN78N05	IC	1	
IC33		AN79N05	IC	1	
IC200		AN78N09	IC	1	
IC201		AN79N09	IC	1	
IC202		AN78N09	IC	1	
IC203		AN79N09	IC	1	
IC204		AN78N09	IC	1	
IC205		AN79N09	IC	1	
IC206		TL082CPS	IC	1	
IC207		CA3054	IC	1	
IC208-10		TL082CPS	IC	3	
IC211		AN78L05	IC	1	
IC215		TL082CPS	IC	1	
IC216		AN79L09	IC	1	

Ref.No.		Part No.	Part Name & Description	Pcs	Remarks
IC501		TL082CPS	IC	1	
IC502,03		CA3054	IC	2	
IC504,05		NJM1496M	IC	2	
IC506		10116D	IC	1	
IC507		MC74HC04AF	IC	1	
IC508		NJM1496M	IC	1	
IC509		MC74HC00AF	IC	1	
IC510		MC74HC74AF	IC	1	
IC511		SN74LS123NS	IC	1	
IC512		10116D	IC	1	
IC513		MC74HC00AF	IC	1	
IC514		MC74HC74AF	IC	1	
IC517		AN78N09	IC	1	
IC518		AN79N09	IC	1	
IC519		AN78N05	IC	1	
IC520		AN79N05	IC	1	
IC521		AN78N09	IC	1	
IC522		AN79N09	IC	1	
IC523		MC74HC04AF	IC	1	
IC800		NE521D	IC	1	
IC801		MC74HC126AF	IC	1	
IC802,03		MC10125L	IC	2	
IC804		MN53010VYD	IC	1	
IC805		UPC311G	IC	1	
IC806		MC74HC126AF	IC	1	
IC807-14		TL082CPS	IC	8	
IC815-17		MC74HC4053F	IC	3	
IC818		AN78N09	IC	1	
IC819		AN79N09	IC	1	
IC820		AN78N05	IC	1	
IC821		AN79N05	IC	1	
L1-L3		VLP0017	COIL	3	
L5		VLQEL05S821J	COIL 820UH	1	
L6-L9		VLP0017	COIL	4	
L10		VLQEL05S221J	COIL 220UH	1	
L12		VLQEL05S5R6J	COIL 5.6UH	1	
L13		VLQEL05S390J	COIL 39UH	1	
L14		VLQEL05S100J	COIL 10UH	1	
L15		VLQEL05S5R6J	COIL 5.6UH	1	
L17		VLQEL05S5R6J	COIL 5.6UH	1	
L18		VLQEL05S390J	COIL 39UH	1	
L19		VLQEL05S100J	COIL 10UH	1	
L20		VLQEL05S5R6J	COIL 5.6UH	1	
L200		VLQEL05S6R8J	COIL 6.8UH	1	
L201		VLQEL05S151J	COIL 150UH	1	
L203		VLQEL05S151J	COIL 150UH	1	
L205,06		VLP0017	COIL	2	
L208,09		VLQEL05S6R8J	COIL 6.8UH	2	
L210		VLQEL05S101J	COIL 100UH	1	
L211,12		VLQEL05S6R8J	COIL 6.8UH	2	
L501,02		VLQEL05S101K	COIL 100UH	2	
L503		VLQEL05S6R8J	COIL 6.8UH	1	
L505		VLQEL05S101K	COIL 100UH	1	
L506		VLQEL05S680J	COIL 68UH	1	
L507,08		VLQEL05S101K	COIL 100UH	2	
L511		VLQEL05S150J	COIL 15UH	1	
L512		VLQEL05S5R6J	COIL 5.6UH	1	
L513		VLQEL05S6R8J	COIL 6.8UH	1	
L514		VLQEL05S180J	COIL 18UH	1	
L515		VLQEL05S560J	COIL 56UH	1	
L518,19		VLQEL05S101K	COIL 100UH	2	
L520,21		VLQEL05S470J	COIL 47UH	2	
L522,23		VLP0017	COIL	2	
L801		VLQEL05S8R2J	COIL 8.2UH	1	
Q1		2SD601-R	TRANSISTOR CHIP	1	([illegible],R)
Q2		2SB709-R	TRANSISTOR CHIP	1	([illegible],R)
Q3		2SD601-R	TRANSISTOR CHIP	1	([illegible],R)
Q4,Q5		2SB709-R	TRANSISTOR CHIP	2	([illegible],R)
Q6,Q7		2SC2404-C	TRANSISTOR CHIP	2	([illegible],D)

Ref.No.		Part No.	Part Name & Description	Pcs	Remarks
Q8		2SA1022-B	TRANSISTOR CHIP	1	(B,C)
Q9		2SC2295-B	TRANSISTOR CHIP	1	(B,C)
Q10		2SA1022-B	TRANSISTOR CHIP	1	(B,C)
Q11		2SK374-R	TRANSISTOR	1	(Q,R)
Q12		2SB709-R	TRANSISTOR CHIP	1	(Q,R)
Q13		2SD601-R	TRANSISTOR CHIP	1	(Q,R)
Q14		2SB709-R	TRANSISTOR CHIP	1	(Q,R)
Q15		2SD601-R	TRANSISTOR CHIP	1	(Q,R)
Q16		2SB709-R	TRANSISTOR CHIP	1	(Q,R)
Q17,18		2SC2404-C	TRANSISTOR CHIP	2	(C,D)
Q19		2SA1022-B	TRANSISTOR CHIP	1	(B,C)
Q20		2SC2295-B	TRANSISTOR CHIP	1	(B,C)
Q21		2SA1022-B	TRANSISTOR CHIP	1	(B,C)
Q22		2SK374-R	TRANSISTOR	1	(Q,R)
Q23		2SB709-R	TRANSISTOR CHIP	1	(Q,R)
Q24		2SD601-R	TRANSISTOR CHIP	1	(Q,R)
Q25		2SA1022-B	TRANSISTOR CHIP	1	(B,C)
Q26-28		2SD601-R	TRANSISTOR CHIP	3	(Q,R)
Q200		2SD601-R	TRANSISTOR CHIP	1	(Q,R)
Q201,02		2SB709-R	TRANSISTOR CHIP	2	(Q,R)
Q203,04		2SD601-R	TRANSISTOR CHIP	2	(Q,R)
Q205,06		2SC2404-C	TRANSISTOR CHIP	2	(C,D)
Q207		2SA1022-B	TRANSISTOR CHIP	1	(B,C)
Q208		2SC2295-B	TRANSISTOR CHIP	1	(B,C)
Q209		2SD601-R	TRANSISTOR CHIP	1	(Q,R)
Q210		2SK198	TRANSISTOR	1	(Q,R)
Q211-15		2SD601-R	TRANSISTOR CHIP	5	(Q,R)
Q219		2SD601-R	TRANSISTOR CHIP	1	(Q,R)
Q220,21		2SB709-R	TRANSISTOR CHIP	2	(Q,R)
Q222		2SD601-R	TRANSISTOR CHIP	1	(Q,R)
Q223,24		2SC2404-C	TRANSISTOR CHIP	2	(C,D)
Q225		2SA1022-B	TRANSISTOR CHIP	1	(B,C)
Q226		2SC2295-B	TRANSISTOR CHIP	1	(B,C)
Q227		2SD601-R	TRANSISTOR CHIP	1	(Q,R)
Q229		2SB709-R	TRANSISTOR CHIP	1	(Q,R)
Q230		2SD601-R	TRANSISTOR CHIP	1	(Q,R)
Q232,33		2SB709-R	TRANSISTOR CHIP	2	(Q,R)
Q234		2SD601-R	TRANSISTOR CHIP	1	(Q,R)
Q235,36		2SC2404-C	TRANSISTOR CHIP	2	(C,D)
Q237		2SK198	TRANSISTOR	1	(Q,R)
Q238,39		2SB709-R	TRANSISTOR CHIP	2	(Q,R)
Q240		2SD601-R	TRANSISTOR CHIP	1	(Q,R)
Q241,42		2SC2404-C	TRANSISTOR CHIP	2	(C,D)
Q243		2SA1022-B	TRANSISTOR CHIP	1	(B,C)
Q244		2SC2295-B	TRANSISTOR CHIP	1	(B,C)
Q245		2SD601-R	TRANSISTOR CHIP	1	(Q,R)
Q246		2SK198	TRANSISTOR	1	(Q,R)
Q247		2SB709-R	TRANSISTOR CHIP	1	(Q,R)
Q248,49		2SD601-R	TRANSISTOR CHIP	2	(Q,R)
Q250,51		2SB709-R	TRANSISTOR CHIP	2	(Q,R)
Q252		2SD601-R	TRANSISTOR CHIP	1	(Q,R)
Q253,54		2SC2404-C	TRANSISTOR CHIP	2	(C,D)
Q255		2SK198	TRANSISTOR	1	(Q,R)
Q256		2SC2404-C	TRANSISTOR CHIP	1	(C,D)
Q257		2SB709-R	TRANSISTOR CHIP	1	(Q,R)
Q258		2SA1022-B	TRANSISTOR CHIP	1	(B,C)
Q259-63		2SC2295-B	TRANSISTOR CHIP	5	(B,C)
Q265		2SC2295-B	TRANSISTOR CHIP	1	(B,C)
Q266,67		2SD601-R	TRANSISTOR CHIP	2	(Q,R)
Q284		2SK198	TRANSISTOR	1	(Q,R)
Q285		2SC2295-B	TRANSISTOR CHIP	1	(B,C)
Q286,87		2SD601-R	TRANSISTOR CHIP	2	(Q,R)
Q288,89		2SB709-R	TRANSISTOR CHIP	2	(Q,R)
Q290		2SD601-R	TRANSISTOR CHIP	1	(Q,R)
Q291,92		2SB709-R	TRANSISTOR CHIP	2	(Q,R)
Q501,02		2SC2295-B	TRANSISTOR CHIP	2	(B,C)
Q503,04		2SD601-R	TRANSISTOR CHIP	2	(Q,R)
Q505		2SK198	TRANSISTOR	1	(Q,R)
Q506		2SB709-R	TRANSISTOR CHIP	1	(Q,R)
Q507-09		2SD601-R	TRANSISTOR CHIP	3	(Q,R)
Q514-16		2SD601-R	TRANSISTOR CHIP	3	(Q,R)
Q518		2SD601-R	TRANSISTOR CHIP	1	(Q,R)
Q519		2SC2295-B	TRANSISTOR CHIP	1	(B,C)
Q520		2SD601-R	TRANSISTOR CHIP	1	(Q,R)
Q521,22		2SC2295-B	TRANSISTOR CHIP	2	(B,C)

Ref.No.		Part No.	Part Name & Description	Pcs	Remarks
Q523		2SD601-R	TRANSISTOR CHIP	1	(Q,R)
Q524,25		2SB709-R	TRANSISTOR CHIP	2	(Q,R)
Q526,27		2SC2295-B	TRANSISTOR CHIP	2	(B,C)
Q528		2SD601-R	TRANSISTOR CHIP	1	(Q,R)
Q532		2SB709-R	TRANSISTOR CHIP	1	(Q,R)
Q533-37		2SD601-R	TRANSISTOR CHIP	5	(Q,R)
Q538		2SB709-R	TRANSISTOR CHIP	1	(Q,R)
Q539		2SD601-R	TRANSISTOR CHIP	1	(Q,R)
Q540		2SB709-R	TRANSISTOR CHIP	1	(Q,R)
Q541		2SD601-R	TRANSISTOR CHIP	1	(Q,R)
Q542		2SB709-R	TRANSISTOR CHIP	1	(Q,R)
Q543		2SD601-R	TRANSISTOR CHIP	1	(Q,R)
Q544		2SB709-R	TRANSISTOR CHIP	1	(Q,R)
Q545-52		2SD601-R	TRANSISTOR CHIP	8	(Q,R)
Q800		2SC2295-B	TRANSISTOR CHIP	1	(B,C)
Q801		2SD601-R	TRANSISTOR CHIP	1	(Q,R)
Q802		2SB709-R	TRANSISTOR CHIP	1	(Q,R)
Q803		2SC2295-B	TRANSISTOR CHIP	1	(B,C)
Q804		2SB709-R	TRANSISTOR CHIP	1	(Q,R)
Q805		2SC2295-B	TRANSISTOR CHIP	1	(B,C)
Q807		2SD601-R	TRANSISTOR CHIP	1	(Q,R)
Q808-15		2SC2295-B	TRANSISTOR CHIP	8	(B,C)
Q816,17		2SB709-R	TRANSISTOR CHIP	2	(Q,R)
Q818,19		2SC2295-B	TRANSISTOR CHIP	2	(B,C)
Q826		ECUM1E104ZFN	C.CAPACITOR CH 25V 0.1U	1	
Q833		ECUM1E104ZFN	C.CAPACITOR CH 25V 0.1U	1	
			RESISTORS		
R1		ERJ6GEYG222	M.RESISTOR CH 1/10W 2.2K	1	
R2,R3		ERJ6GEYG220	M.RESISTOR CH 1/10W 22	2	
R4,R5		ERJ6GEYG152	M.RESISTOR CH 1/10W 1.5K	2	
R6,R7		VRE0034E561	M.RESISTOR CH 1/10W 560	2	
R8		ERJ6GEYG150	M.RESISTOR CH 1/10W 15	1	
R9		ERJ6GEYG473	M.RESISTOR CH 1/10W 47K	1	
R10		VRE0034E301	M.RESISTOR CH 1/10W 300	1	
R11		ERJ6GEYG220	M.RESISTOR CH 1/10W 22	1	
R12		ERJ6GEYG122	M.RESISTOR CH 1/10W 1.2K	1	
R13		VRE0034E221	M.RESISTOR CH 1/10W 220	1	
R14		VRE0034E121	M.RESISTOR CH 1/10W 120	1	
R15		VRE0034E301	M.RESISTOR CH 1/10W 300	1	
R16		ERJ6GEYG683	M.RESISTOR CH 1/10W 68K	1	
R17		ERJ6GEYG332	M.RESISTOR CH 1/10W 3.3K	1	
R18		ERJ6GEYG151	M.RESISTOR CH 1/10W 150	1	
R19		ERJ6GEYG101	M.RESISTOR CH 1/10W 100	1	
R20		ERJ6GEYG472	M.RESISTOR CH 1/10W 4.7K	1	
R21		ERJ6GEYG183	M.RESISTOR CH 1/10W 18K	1	
R22		ERJ6GEYG821	M.RESISTOR CH 1/10W 820	1	
R23,24		ERJ6GEYG102	M.RESISTOR CH 1/10W 1K	2	
R25,26		ERJ6GEYG101	M.RESISTOR CH 1/10W 100	2	
R27		ERJ6GEYG122	M.RESISTOR CH 1/10W 1.2K	1	
R28		ERJ6GEYG471	M.RESISTOR CH 1/10W 470	1	
R29		ERJ6GEYG222	M.RESISTOR CH 1/10W 2.2K	1	
R30		ERJ6GEYG272	M.RESISTOR CH 1/10W 2.7K	1	
R31		VRE0034E333	M.RESISTOR CH 1/10W 33K	1	
R32		VRE0034E103	M.RESISTOR CH 1/10W 10K	1	
R33		ERJ6GEYG222	M.RESISTOR CH 1/10W 2.2K	1	
R34		ERJ6GEYG223	M.RESISTOR CH 1/10W 22K	1	
R35		ERJ6GEYG562	M.RESISTOR CH 1/10W 5.6K	1	
R36,37		ERJ6GEYG332	M.RESISTOR CH 1/10W 3.3K	2	
R38		ERJ6GEYG823	M.RESISTOR CH 1/10W 82K	1	
R39		ERJ6GEYG332	M.RESISTOR CH 1/10W 3.3K	1	
R40		ERJ6GEYG222	M.RESISTOR CH 1/10W 2.2K	1	
R41		ERJ6GEYG563	M.RESISTOR CH 1/10W 56K	1	
R42		ERJ6GEYG333	M.RESISTOR CH 1/10W 33K	1	
R43		ERJ6GEYG332	M.RESISTOR CH 1/10W 3.3K	1	
R44		ERJ6GEYG272	M.RESISTOR CH 1/10W 2.7K	1	
R45		ERJ6GEYG273	M.RESISTOR CH 1/10W 27K	1	
R46		ERJ6GEYG224	M.RESISTOR CH 1/10W 220K	1	
R47		ERJ6GEYG472	M.RESISTOR CH 1/10W 4.7K	1	
R48		ERJ6GEYG272	M.RESISTOR CH 1/10W 2.7K	1	
R49		ERJ6GEYG221	M.RESISTOR CH 1/10W 220	1	
R50		ERJ6GEYG391	M.RESISTOR CH 1/10W 390	1	
R51		VRE0034E273	M.RESISTOR CH 1/10W 27K	1	

Ref.No.		Part No.	Part Name & Description	Pcs	Remarks
R52		VRE0034E203	M.RESISTOR CH 1/10W 20K	1	
R53		VRE0034E153	M.RESISTOR CH 1/10W 15K	1	
R54		ERJ6GEYG220	M.RESISTOR CH 1/10W 22	1	
R55		ERJ6GEYG222	M.RESISTOR CH 1/10W 2.2K	1	
R56		ERJ6GEYG332	M.RESISTOR CH 1/10W 3.3K	1	
R57		ERJ6GEYG222	M.RESISTOR CH 1/10W 2.2K	1	
R58,59		ERJ6GEYG220	M.RESISTOR CH 1/10W 22	2	
R60,61		ERJ6GEYG152	M.RESISTOR CH 1/10W 1.5K	2	
R62,63		VRE0034E561	M.RESISTOR CH 1/10W 560	2	
R64		ERJ6GEYG150	M.RESISTOR CH 1/10W 15	1	
R65		VRE0034E301	M.RESISTOR CH 1/10W 300	1	
R66		ERJ6GEYG220	M.RESISTOR CH 1/10W 22	1	
R67		ERJ6GEYG222	M.RESISTOR CH 1/10W 2.2K	1	
R68		ERJ6GEYG102	M.RESISTOR CH 1/10W 1K	1	
R69		ERJ6GEYG471	M.RESISTOR CH 1/10W 470	1	
R70		ERJ6GEYG122	M.RESISTOR CH 1/10W 1.2K	1	
R71		ERJ6GEYG101	M.RESISTOR CH 1/10W 100	1	
R72		ERJ6GEYG472	M.RESISTOR CH 1/10W 4.7K	1	
R73		ERJ6GEYG183	M.RESISTOR CH 1/10W 18K	1	
R74		ERJ6GEYG102	M.RESISTOR CH 1/10W 1K	1	
R75		ERJ6GEYG101	M.RESISTOR CH 1/10W 100	1	
R76		ERJ6GEYG102	M.RESISTOR CH 1/10W 1K	1	
R77		ERJ6GEYG101	M.RESISTOR CH 1/10W 100	1	
R78		ERJ6GEYG122	M.RESISTOR CH 1/10W 1.2K	1	
R79		ERJ6GEYG471	M.RESISTOR CH 1/10W 470	1	
R80		ERJ6GEYG222	M.RESISTOR CH 1/10W 2.2K	1	
R81		ERJ6GEYG272	M.RESISTOR CH 1/10W 2.7K	1	
R82		ERJ6GEYG223	M.RESISTOR CH 1/10W 22K	1	
R83		ERJ6GEYG222	M.RESISTOR CH 1/10W 2.2K	1	
R84		ERJ6GEYG220	M.RESISTOR CH 1/10W 22	1	
R85		ERJ6GEYG562	M.RESISTOR CH 1/10W 5.6K	1	
R86,87		ERJ6GEYG332	M.RESISTOR CH 1/10W 3.3K	2	
R88		ERJ6GEYG823	M.RESISTOR CH 1/10W 82K	1	
R89		ERJ6GEYG332	M.RESISTOR CH 1/10W 3.3K	1	
R90		ERJ6GEYG222	M.RESISTOR CH 1/10W 2.2K	1	
R91		ERJ6GEYG563	M.RESISTOR CH 1/10W 56K	1	
R92		ERJ6GEYG333	M.RESISTOR CH 1/10W 33K	1	
R93		ERJ6GEYG332	M.RESISTOR CH 1/10W 3.3K	1	
R94		ERJ6GEYG273	M.RESISTOR CH 1/10W 27K	1	
R95		ERJ6GEYG272	M.RESISTOR CH 1/10W 2.7K	1	
R96		ERJ6GEYG472	M.RESISTOR CH 1/10W 4.7K	1	
R97		ERJ6GEYG224	M.RESISTOR CH 1/10W 220K	1	
R98		ERJ6GEYG272	M.RESISTOR CH 1/10W 2.7K	1	
R99		ERJ6GEYG221	M.RESISTOR CH 1/10W 220	1	
R100		ERJ6GEYG222	M.RESISTOR CH 1/10W 2.2K	1	
R101		ERJ6GEYG332	M.RESISTOR CH 1/10W 3.3K	1	
R102		ERJ6GEYG272	M.RESISTOR CH 1/10W 2.7K	1	
R103		VRE0034E223	M.RESISTOR CH 1/10W 22K	1	
R104		VRE0034E153	M.RESISTOR CH 1/10W 15K	1	
R105		ERJ6GEYG272	M.RESISTOR CH 1/10W 2.7K	1	
R109,10		ERJ6GEY0R00	M.RESISTOR CH 1/10W 0	2	
R133		ERJ6GEYG224	M.RESISTOR CH 1/10W 220K	1	
R135,36		ERJ6GEYG822	M.RESISTOR CH 1/10W 8.2K	2	
R137		ERJ6GEYG222	M.RESISTOR CH 1/10W 2.2K	1	
R138		ERJ6GEYG102	M.RESISTOR CH 1/10W 1K	1	
R139		ERJ6GEYG222	M.RESISTOR CH 1/10W 2.2K	1	
R140		ERJ6GEYG104	M.RESISTOR CH 1/10W 100K	1	
R141		ERJ6GEYG470	M.RESISTOR CH 1/10W 47	1	
R142		ERJ6GEYG681	M.RESISTOR CH 1/10W 680	1	
R143,44		ERJ6GEYG301	M.RESISTOR CH 1/10W 300	2	
R145		ERJ6GEYG223	M.RESISTOR CH 1/10W 22K	1	
R146		ERJ6GEYG105	M.RESISTOR CH 1/10W 1M	1	
R148,49		ERJ6GEYG103	M.RESISTOR CH 1/10W 10K	2	
R150		ERJ6GEYG104	M.RESISTOR CH 1/10W 100K	1	
R151		ERJ6GEYG102	M.RESISTOR CH 1/10W 1K	1	
R152		ERJ6GEYG222	M.RESISTOR CH 1/10W 2.2K	1	
R153		ERJ6GEYG333	M.RESISTOR CH 1/10W 33K	1	
R154		ERJ6GEYG104	M.RESISTOR CH 1/10W 100K	1	
R155		ERJ6GEYG332	M.RESISTOR CH 1/10W 3.3K	1	
R156		ERJ6GEYG472	M.RESISTOR CH 1/10W 4.7K	1	
R157		ERJ6GEYG103	M.RESISTOR CH 1/10W 10K	1	
R158		ERJ6GEYG221	M.RESISTOR CH 1/10W 220	1	
R159		ERJ6GEYG681	M.RESISTOR CH 1/10W 680	1	
R160,61		ERJ6GEYG301	M.RESISTOR CH 1/10W 300	2	
R162,63		ERJ6GEYG103	M.RESISTOR CH 1/10W 10K	2	

Ref.No.		Part No.	Part Name & Description	Pcs	Remarks
R164,65		ERJ6GEY0R00	M.RESISTOR CH 1/10W 0	2	
R166,67		ERJ6GEYG102	M.RESISTOR CH 1/10W 1K	2	
R168		ERJ6GEYG470	M.RESISTOR CH 1/10W 47	1	
R169,70		ERJ6GEYG272	M.RESISTOR CH 1/10W 2.7K	2	
R171		ERJ6GEYG102	M.RESISTOR CH 1/10W 1K	1	
R172		ERJ6GEYG272	M.RESISTOR CH 1/10W 2.7K	1	
R173		ERJ6GEYG470	M.RESISTOR CH 1/10W 47	1	
R174		ERJ6GEYJ471	M.RESISTOR CH 1/10W 470	1	
R175		ERJ6GEY0R00	M.RESISTOR CH 1/10W 0	1	
R176		ERDS2TJ101	C.RESISTOR 1/4W 100	1	
R178		ERDS2TJ681	C.RESISTOR 1/4W 680	1	
R200		ERJ6GEYG272	M.RESISTOR CH 1/10W 2.7K	1	
R201		ERJ6GEYG222	M.RESISTOR CH 1/10W 2.2K	1	
R202,03		VRE0034E331	M.RESISTOR CH 1/10W 330	2	
R204		ERJ6GEYG470	M.RESISTOR CH 1/10W 47	1	
R205		ERJ6GEYG272	M.RESISTOR CH 1/10W 2.7K	1	
R206,07		VRE0034E102	M.RESISTOR CH 1/10W 1K	2	
R209		VRE0034E621	M.RESISTOR CH 1/10W 620	1	
R210,11		ERJ6GEYG272	M.RESISTOR CH 1/10W 2.7K	2	
R212		ERJ6GEYG102	M.RESISTOR CH 1/10W 1K	1	
R213		ERJ6GEYG221	M.RESISTOR CH 1/10W 220	1	
R214		ERJ6GEYG681	M.RESISTOR CH 1/10W 680	1	
R215		ERJ6GEYG101	M.RESISTOR CH 1/10W 100	1	
R216		ERJ6GEYG102	M.RESISTOR CH 1/10W 1K	1	
R217		ERJ6GEYG101	M.RESISTOR CH 1/10W 100	1	
R218		ERJ6GEYG102	M.RESISTOR CH 1/10W 1K	1	
R219		ERJ6GEYG152	M.RESISTOR CH 1/10W 1.5K	1	
R220		ERJ6GEYG222	M.RESISTOR CH 1/10W 2.2K	1	
R221		ERJ6GEYG471	M.RESISTOR CH 1/10W 470	1	
R222,23		ERJ6GEYG222	M.RESISTOR CH 1/10W 2.2K	2	
R224		ERJ6GEYG101	M.RESISTOR CH 1/10W 100	1	
R225		ERJ6GEYG683	M.RESISTOR CH 1/10W 68K	1	
R226		ERJ6GEYG272	M.RESISTOR CH 1/10W 2.7K	1	
R227		ERJ6GEYG222	M.RESISTOR CH 1/10W 2.2K	1	
R228		ERJ6GEYG103	M.RESISTOR CH 1/10W 10K	1	
R229		ERJ6GEYG102	M.RESISTOR CH 1/10W 1K	1	
R230		ERJ6GEYG222	M.RESISTOR CH 1/10W 2.2K	1	
R231		ERJ6GEYG470	M.RESISTOR CH 1/10W 47	1	
R233		ERJ6GEYG102	M.RESISTOR CH 1/10W 1K	1	
R234		ERJ6GEYG681	M.RESISTOR CH 1/10W 680	1	
R235		ERJ6GEYG561	M.RESISTOR CH 1/10W 560	1	
R236		ERJ6GEYG121	M.RESISTOR CH 1/10W 120	1	
R237		ERJ6GEYG391	M.RESISTOR CH 1/10W 390	1	
R238		ERJ6GEYG223	M.RESISTOR CH 1/10W 22K	1	
R240		ERJ6GEYG182	M.RESISTOR CH 1/10W 1.8K	1	
R241		ERJ6GEYG273	M.RESISTOR CH 1/10W 27K	1	
R242		ERJ6GEYG470	M.RESISTOR CH 1/10W 47	1	
R243		ERJ6GEYG182	M.RESISTOR CH 1/10W 1.8K	1	
R244		VRE0034E151	M.RESISTOR CH 1/10W 150	1	
R245		ERJ6GEYG152	M.RESISTOR CH 1/10W 1.5K	1	
R246		ERJ6GEYG331	M.RESISTOR CH 1/10W 330	1	
R257		VRE0034E331	M.RESISTOR CH 1/10W 330	1	
R258-60		VRE0034E301	M.RESISTOR CH 1/10W 300	3	
R262,63		VRE0034E102	M.RESISTOR CH 1/10W 1K	2	
R264		VRE0034E821	M.RESISTOR CH 1/10W 820	1	
R265,66		VRE0034E102	M.RESISTOR CH 1/10W 1K	2	
R268		ERJ6GEY0R00	M.RESISTOR CH 1/10W 0	1	
R269		ERJ6GEYG272	M.RESISTOR CH 1/10W 2.7K	1	
R270		ERJ6GEYG471	M.RESISTOR CH 1/10W 470	1	
R271		ERJ6GEYG331	M.RESISTOR CH 1/10W 330	1	
R272		ERJ6GEYG152	M.RESISTOR CH 1/10W 1.5K	1	
R273		ERJ6GEYG102	M.RESISTOR CH 1/10W 1K	1	
R274		ERJ6GEYG101	M.RESISTOR CH 1/10W 100	1	
R275		ERJ6GEYG102	M.RESISTOR CH 1/10W 1K	1	
R276		ERJ6GEYG101	M.RESISTOR CH 1/10W 100	1	
R277		ERJ6GEYG152	M.RESISTOR CH 1/10W 1.5K	1	
R278		ERJ6GEYG471	M.RESISTOR CH 1/10W 470	1	
R279		ERJ6GEYG222	M.RESISTOR CH 1/10W 2.2K	1	
R280		ERJ6GEYG152	M.RESISTOR CH 1/10W 1.5K	1	
R281		ERJ6GEYG222	M.RESISTOR CH 1/10W 2.2K	1	
R282		ERJ6GEYG101	M.RESISTOR CH 1/10W 100	1	
R283		ERJ6GEYG272	M.RESISTOR CH 1/10W 2.7K	1	
R285,86		ERJ6GEYG103	M.RESISTOR CH 1/10W 10K	2	
R288		ERJ6GEYG102	M.RESISTOR CH 1/10W 1K	1	
R290		ERJ6GEYG470	M.RESISTOR CH 1/10W 47	1	

Ref.No.		Part No.	Part Name & Description	Pcs	Remarks
R291		ERJ6GEYG222	M.RESISTOR CH 1/10W 2.2K	1	
R292		ERJ6GEYG102	M.RESISTOR CH 1/10W 1K	1	
R293		ERJ6GEYG152	M.RESISTOR CH 1/10W 1.5K	1	
R294		ERJ6GEYG470	M.RESISTOR CH 1/10W 47	1	
R298		ERJ6GEYG470	M.RESISTOR CH 1/10W 47	1	
R299		ERJ6GEYG272	M.RESISTOR CH 1/10W 2.7K	1	
R300,01		VRE0034E102	M.RESISTOR CH 1/10W 1K	2	
R302		ERJ6GEY0R00	M.RESISTOR CH 1/10W 0	1	
R303		ERJ6GEYG272	M.RESISTOR CH 1/10W 2.7K	1	
R306		ERJ6GEYG683	M.RESISTOR CH 1/10W 68K	1	
R307		ERJ6GEYG821	M.RESISTOR CH 1/10W 820	1	
R308		ERJ6GEYG273	M.RESISTOR CH 1/10W 27K	1	
R309		ERJ6GEYG272	M.RESISTOR CH 1/10W 2.7K	1	
R310		ERJ6GEYG682	M.REISITOR CH 1/10W 6.8K	1	
R311		ERJ6GEYG272	M.RESISTOR CH 1/10W 2.7K	1	
R312		ERJ6GEYG222	M.RESISTOR CH 1/10W 2.2K	1	
R313		ERJ6GEYG101	M.RESISTOR CH 1/10W 100	1	
R314		ERJ6GEYG683	M.RESISTOR CH 1/10W 68K	1	
R316-18		VRE0034E301	M.RESISTOR CH 1/10W 300	3	
R320,21		VRE0034E102	M.RESISTOR CH 1/10W 1K	2	
R322		VRE0034E821	M.RESISTOR CH 1/10W 820	1	
R323,24		VRE0034E102	M.RESISTOR CH 1/10W 1K	2	
R326		ERJ6GEY0R00	M.RESISTOR CH 1/10W 0	1	
R327		ERJ6GEYG272	M.RESISTOR CH 1/10W 2.7K	1	
R328		ERJ6GEYG152	M.RESISTOR CH 1/10W 1.5K	1	
R329		ERJ6GEYG471	M.RESISTOR CH 1/10W 470	1	
R330		ERJ6GEYG331	M.RESISTOR CH 1/10W 330	1	
R331		ERJ6GEYG102	M.RESISTOR CH 1/10W 1K	1	
R332		ERJ6GEYG101	M.RESISTOR CH 1/10W 100	1	
R333		ERJ6GEYG102	M.RESISTOR CH 1/10W 1K	1	
R334		ERJ6GEYG101	M.RESISTOR CH 1/10W 100	1	
R335		ERJ6GEYG152	M.RESISTOR CH 1/10W 1.5K	1	
R336		ERJ6GEYG471	M.RESISTOR CH 1/10W 470	1	
R337		ERJ6GEYG222	M.RESISTOR CH 1/10W 2.2K	1	
R338,39		ERJ6GEYG152	M.RESISTOR CH 1/10W 1.5K	2	
R340		ERJ6GEYG101	M.RESISTOR CH 1/10W 100	1	
R341		ERJ6GEYG272	M.RESISTOR CH 1/10W 2.7K	1	
R342		ERJ6GEYG683	M.RESISTOR CH 1/10W 68K	1	
R344,45		ERJ6GEYG103	M.RESISTOR CH 1/10W 10K	2	
R346		ERJ6GEYG102	M.RESISTOR CH 1/10W 1K	1	
R347		ERJ6GEYG470	M.RESISTOR CH 1/10W 47	1	
R348		ERJ6GEYG222	M.RESISTOR CH 1/10W 2.2K	1	
R349		ERJ6GEYG470	M.RESISTOR CH 1/10W 47	1	
R350		ERJ6GEYG152	M.RESISTOR CH 1/10W 1.5K	1	
R351		ERJ6GEYG391	M.RESISTOR CH 1/10W 390	1	
R355		ERJ6GEYG470	M.RESISTOR CH 1/10W 47	1	
R356		ERJ6GEYG222	M.RESISTOR CH 1/10W 2.2K	1	
R357,58		VRE0034E102	M.RESISTOR CH 1/10W 1K	2	
R359		VRE0034E271	M.RESISTOR CH 1/10W 270	1	
R360		ERJ6GEYG272	M.RESISTOR CH 1/10W 2.7K	1	
R364		ERJ6GEYG391	M.RESISTOR CH 1/10W 390	1	
R365		ERJ6GEYG273	M.RESISTOR CH 1/10W 27K	1	
R366		ERJ6GEYG272	M.RESISTOR CH 1/10W 2.7K	1	
R367		ERJ6GEYG682	M.REISITOR CH 1/10W 6.8K	1	
R368		ERJ6GEYG272	M.RESISTOR CH 1/10W 2.7K	1	
R369		ERJ6GEYG222	M.RESISTOR CH 1/10W 2.2K	1	
R370		ERJ6GEYG101	M.RESISTOR CH 1/10W 100	1	
R371		ERJ6GEYG683	M.RESISTOR CH 1/10W 68K	1	
R372		ERJ6GEYG332	M.RESISTOR CH 1/10W 3.3K	1	
R373		ERJ6GEYG562	M.RESISTOR CH 1/10W 5.6K	1	
R374,75		ERJ6GEYG223	M.RESISTOR CH 1/10W 22K	2	
R376		ERJ6GEYG332	M.RESISTOR CH 1/10W 3.3K	1	
R396		ERJ6GEYG332	M.RESISTOR CH 1/10W 3.3K	1	
R397		ERJ6GEYG472	M.RESISTOR CH 1/10W 4.7K	1	
R398		ERJ6GEYG153	M.RESISTOR CH 1/10W 15K	1	
R399		ERJ6GEYG221	M.RESISTOR CH 1/10W 220	1	
R400		ERJ6GEYG472	M.RESISTOR CH 1/10W 4.7K	1	
R401,02		ERJ6GEYG102	M.RESISTOR CH 1/10W 1K	2	
R404		ERJ6GEYG102	M.RESISTOR CH 1/10W 1K	1	
R405,06		ERJ6GEYG221	M.RESISTOR CH 1/10W 220	2	
R409		VRE0034E391	M.RESISTOR CH 1/10W 390	1	
R410		ERJ6GEY0R00	M.RESISTOR CH 1/10W 0	1	
R411		ERJ6GEYG221	M.RESISTOR CH 1/10W 220	1	
R412		VRE0034E391	M.RESISTOR CH 1/10W 390	1	
R413-16		ERJ6GEYG223	M.RESISTOR CH 1/10W 22K	4	

Ref.No.		Part No.	Part Name & Description	Pcs	Remarks
R417		VRE0034E391	M.RESISTOR CH 1/10W 390	1	
R418		ERJ6GEYG151	M.RESISTOR CH 1/10W 150	1	
R421		ERJ6GEYG221	M.RESISTOR CH 1/10W 220	1	
R422		VRE0034E391	M.RESISTOR CH 1/10W 390	1	
R423		ERJ6GEY0R00	M.RESISTOR CH 1/10W 0	1	
R424		ERJ6GEYG101	M.RESISTOR CH 1/10W 100	1	
R425,26		ERJ6GEYG470	M.RESISTOR CH 1/10W 47	2	
R427		ERJ6GEYG221	M.RESISTOR CH 1/10W 220	1	
R428		VRE0034E391	M.RESISTOR CH 1/10W 390	1	
R429		ERJ6GEYG392	M.RESISTOR CH 1/10W 3.9K	1	
R430		ERJ6GEYG102	M.RESISTOR CH 1/10W 1K	1	
R431		VRE0034E821	M.RESISTOR CH 1/10W 820	1	
R432		ERJ6GEYG102	M.RESISTOR CH 1/10W 1K	1	
R433		ERJ6GEYG152	M.RESISTOR CH 1/10W 1.5K	1	
R434		ERJ6GEYG123	M.RESISTOR CH 1/10W 12K	1	
R435		ERJ6GEYG682	M.REISITOR CH 1/10W 6.8K	1	
R436		ERJ6GEYG822	M.RESISTOR CH 1/10W 8.2K	1	
R437		ERJ6GEYG123	M.RESISTOR CH 1/10W 12K	1	
R438		ERJ6GEYG152	M.RESISTOR CH 1/10W 1.5K	1	
R439		ERJ6GEYG102	M.RESISTOR CH 1/10W 1K	1	
R440		VRE0034E821	M.RESISTOR CH 1/10W 820	1	
R441		ERJ6GEYG102	M.RESISTOR CH 1/10W 1K	1	
R442		ERJ6GEYG222	M.RESISTOR CH 1/10W 2.2K	1	
R443		ERJ6GEY0R00	M.RESISTOR CH 1/10W 0	1	
R501		ERJ6GEYG102	M.RESISTOR CH 1/10W 1K	1	
R502		ERJ6GEYG330	M.RESISTOR CH 1/10W 33	1	
R503,04		ERJ6GEYG222	M.RESISTOR CH 1/10W 2.2K	2	
R505,06		ERJ6GEYG102	M.RESISTOR CH 1/10W 1K	2	
R507		ERJ6GEYG331	M.RESISTOR CH 1/10W 330	1	
R508		ERJ6GEYG221	M.RESISTOR CH 1/10W 220	1	
R509		ERJ6GEYG152	M.RESISTOR CH 1/10W 1.5K	1	
R510		ERJ6GEYG391	M.RESISTOR CH 1/10W 390	1	
R511		ERJ6GEYG102	M.RESISTOR CH 1/10W 1K	1	
R512		ERJ6GEYG152	M.RESISTOR CH 1/10W 1.5K	1	
R513		ERJ6GEYG683	M.RESISTOR CH 1/10W 68K	1	
R514		ERJ6GEYG182	M.RESISTOR CH 1/10W 1.8K	1	
R515		ERJ6GEYG101	M.RESISTOR CH 1/10W 100	1	
R516		ERJ6GEYG152	M.RESISTOR CH 1/10W 1.5K	1	
R517		ERJ6GEYG470	M.RESISTOR CH 1/10W 47	1	
R518		ERJ6GEYG273	M.RESISTOR CH 1/10W 27K	1	
R519		ERJ6GEYG331	M.RESISTOR CH 1/10W 330	1	
R520		ERJ6GEYG681	M.RESISTOR CH 1/10W 680	1	
R521		ERJ6GEYG391	M.RESISTOR CH 1/10W 390	1	
R522		ERJ6GEYG102	M.RESISTOR CH 1/10W 1K	1	
R523		ERJ6GEYG681	M.RESISTOR CH 1/10W 680	1	
R524		ERJ6GEYG561	M.RESISTOR CH 1/10W 560	1	
R525		ERJ6GEYG182	M.RESISTOR CH 1/10W 1.8K	1	
R526		ERJ6GEYG470	M.RESISTOR CH 1/10W 47	1	
R527		ERJ6GEYG182	M.RESISTOR CH 1/10W 1.8K	1	
R528		VRE0034E151	M.RESISTOR CH 1/10W 150	1	
R529		ERJ6GEYG152	M.RESISTOR CH 1/10W 1.5K	1	
R530		ERJ6GEYG470	M.RESISTOR CH 1/10W 47	1	
R542		ERJ6GEYG821	M.RESISTOR CH 1/10W 820	1	
R543		ERJ6GEYG392	M.RESISTOR CH 1/10W 3.9K	1	
R544		ERJ6GEYG561	M.RESISTOR CH 1/10W 560	1	
R545		ERJ6GEYG391	M.RESISTOR CH 1/10W 390	1	
R546		ERJ6GEYG561	M.RESISTOR CH 1/10W 560	1	
R547		ERJ6GEYG391	M.RESISTOR CH 1/10W 390	1	
R549		ERJ6GEYG273	M.RESISTOR CH 1/10W 27K	1	
R551		ERJ6GEYG391	M.RESISTOR CH 1/10W 390	1	
R552		ERJ6GEYG102	M.RESISTOR CH 1/10W 1K	1	
R553		ERJ6GEYG681	M.RESISTOR CH 1/10W 680	1	
R554		ERJ6GEYG561	M.RESISTOR CH 1/10W 560	1	
R555		ERJ6GEYG182	M.RESISTOR CH 1/10W 1.8K	1	
R556		ERJ6GEYG470	M.RESISTOR CH 1/10W 47	1	
R557		ERJ6GEYG182	M.RESISTOR CH 1/10W 1.8K	1	
R558		VRE0034E151	M.RESISTOR CH 1/10W 150	1	
R559		ERJ6GEYG152	M.RESISTOR CH 1/10W 1.5K	1	
R560		ERJ6GEYG470	M.RESISTOR CH 1/10W 47	1	
R564		ERJ6GEYG102	M.RESISTOR CH 1/10W 1K	1	
R565		ERJ6GEYG222	M.RESISTOR CH 1/10W 2.2K	1	
R566		ERJ6GEYG182	M.RESISTOR CH 1/10W 1.8K	1	
R567		ERJ6GEYG221	M.RESISTOR CH 1/10W 220	1	
R568		ERJ6GEYG470	M.RESISTOR CH 1/10W 47	1	
R569		ERJ6GEYG153	M.RESISTOR CH 1/10W 15K	1	

Ref.No.		Part No.	Part Name & Description	Pcs	Remarks
R570		ERJ6GEYG223	M.RESISTOR CH 1/10W 22K	1	
R571		ERJ6GEYG470	M.RESISTOR CH 1/10W 47	1	
R572		ERJ6GEYG472	M.RESISTOR CH 1/10W 4.7K	1	
R573,74		ERJ6GEYG102	M.RESISTOR CH 1/10W 1K	2	
R576		ERJ6GEYG103	M.RESISTOR CH 1/10W 10K	1	
R577		ERJ6GEYG102	M.RESISTOR CH 1/10W 1K	1	
R578		ERJ6GEYG472	M.RESISTOR CH 1/10W 4.7K	1	
R579,80		ERJ6GEYG121	M.RESISTOR CH 1/10W 120	2	
R581,82		ERJ6GEYG821	M.RESISTOR CH 1/10W 820	2	
R583		ERJ6GEYG470	M.RESISTOR CH 1/10W 47	1	
R584		ERJ6GEYG153	M.RESISTOR CH 1/10W 15K	1	
R585		ERJ6GEYG223	M.RESISTOR CH 1/10W 22K	1	
R586		ERJ6GEYG470	M.RESISTOR CH 1/10W 47	1	
R587		ERJ6GEYG472	M.RESISTOR CH 1/10W 4.7K	1	
R588		ERJ6GEYG102	M.RESISTOR CH 1/10W 1K	1	
R590		ERJ6GEYG103	M.RESISTOR CH 1/10W 10K	1	
R591		ERJ6GEYG102	M.RESISTOR CH 1/10W 1K	1	
R592		ERJ6GEYG472	M.RESISTOR CH 1/10W 4.7K	1	
R593,94		ERJ6GEYG121	M.RESISTOR CH 1/10W 120	2	
R595,96		ERJ6GEYG821	M.RESISTOR CH 1/10W 820	2	
R597		ERJ6GEYG102	M.RESISTOR CH 1/10W 1K	1	
R598		ERJ6GEYG103	M.RESISTOR CH 1/10W 10K	1	
R599		ERJ6GEYG822	M.RESISTOR CH 1/10W 8.2K	1	
R600		ERJ6GEYG102	M.RESISTOR CH 1/10W 1K	1	
R601,02		VRE0034E301	M.RESISTOR CH 1/10W 300	2	
R603		ERJ6GEYG152	M.RESISTOR CH 1/10W 1.5K	1	
R604		ERJ6GEYG151	M.RESISTOR CH 1/10W 150	1	
R605		ERJ6GEYG102	M.RESISTOR CH 1/10W 1K	1	
R606		ERJ6GEYG182	M.RESISTOR CH 1/10W 1.8K	1	
R607		ERJ6GEYG332	M.RESISTOR CH 1/10W 3.3K	1	
R608		ERJ6GEYG470	M.RESISTOR CH 1/10W 47	1	
R609,10		ERJ6GEYG122	M.RESISTOR CH 1/10W 1.2K	2	
R611		ERJ6GEY0R00	M.RESISTOR CH 1/10W 0	1	
R612		ERJ6GEYG272	M.RESISTOR CH 1/10W 2.7K	1	
R613		ERJ6GEYG182	M.RESISTOR CH 1/10W 1.8K	1	
R614		ERJ6GEYG392	M.RESISTOR CH 1/10W 3.9K	1	
R615		ERJ6GEYG151	M.RESISTOR CH 1/10W 150	1	
R616		ERJ6GEYG222	M.RESISTOR CH 1/10W 2.2K	1	
R617		ERJ6GEYG330	M.RESISTOR CH 1/10W 33	1	
R618		ERJ6GEYG222	M.RESISTOR CH 1/10W 2.2K	1	
R619		ERJ6GEYG102	M.RESISTOR CH 1/10W 1K	1	
R620		ERJ6GEYG181	M.RESISTOR CH 1/10W 180	1	
R621		ERJ6GEYG821	M.RESISTOR CH 1/10W 820	1	
R622		ERJ6GEYG152	M.RESISTOR CH 1/10W 1.5K	1	
R623		ERJ6GEYG470	M.RESISTOR CH 1/10W 47	1	
R630		ERJ6GEYG272	M.RESISTOR CH 1/10W 2.7K	1	
R633		ERJ6GEY0R00	M.RESISTOR CH 1/10W 0	1	
R634		ERJ6GEYG683	M.RESISTOR CH 1/10W 68K	1	
R635		ERJ6GEYG104	M.RESISTOR CH 1/10W 100K	1	
R636		ERJ6GEYG562	M.RESISTOR CH 1/10W 5.6K	1	
R637		ERJ6GEYG183	M.RESISTOR CH 1/10W 18K	1	
R642		ERJ6GEYG332	M.RESISTOR CH 1/10W 3.3K	1	
R643		ERJ6GEYG822	M.RESISTOR CH 1/10W 8.2K	1	
R644		ERJ6GEYG133	M.RESISTOR CH 1/10W 13K	1	
R645		ERJ6GEYG182	M.RESISTOR CH 1/10W 1.8K	1	
R646		ERJ6GEYG681	M.RESISTOR CH 1/10W 680	1	
R647		ERJ6GEYG471	M.RESISTOR CH 1/10W 470	1	
R648,49		ERJ6GEYG473	M.RESISTOR CH 1/10W 47K	2	
R650		ERJ6GEYG221	M.RESISTOR CH 1/10W 220	1	
R651		ERJ6GEYG682	M.REISITOR CH 1/10W 6.8K	1	
R652		ERJ6GEYG182	M.RESISTOR CH 1/10W 1.8K	1	
R653		ERJ6GEYG122	M.RESISTOR CH 1/10W 1.2K	1	
R654,55		ERJ6GEYG101	M.RESISTOR CH 1/10W 100	2	
R656		ERJ6GEYG122	M.RESISTOR CH 1/10W 1.2K	1	
R657		ERJ6GEYG182	M.RESISTOR CH 1/10W 1.8K	1	
R658		ERJ6GEYG102	M.RESISTOR CH 1/10W 1K	1	
R659		ERJ6GEYG681	M.RESISTOR CH 1/10W 680	1	
R660		ERJ6GEYG102	M.RESISTOR CH 1/10W 1K	1	
R661		ERJ6GEYG222	M.RESISTOR CH 1/10W 2.2K	1	
R662		ERJ6GEYG182	M.RESISTOR CH 1/10W 1.8K	1	
R663		ERJ6GEYG222	M.RESISTOR CH 1/10W 2.2K	1	
R664		ERJ6GEYG682	M.REISITOR CH 1/10W 6.8K	1	
R665		ERJ6GEYG122	M.RESISTOR CH 1/10W 1.2K	1	
R666		ERJ6GEYG102	M.RESISTOR CH 1/10W 1K	1	
R667		ERJ6GEYG182	M.RESISTOR CH 1/10W 1.8K	1	

Ref.No.		Part No.	Part Name & Description	Pcs	Remarks
R668		ERJ6GEYG102	M.RESISTOR CH 1/10W 1K	1	
R669		ERJ6GEYG681	M.RESISTOR CH 1/10W 680	1	
R670		ERJ6GEYG331	M.RESISTOR CH 1/10W 330	1	
R671		ERJ6GEYG152	M.RESISTOR CH 1/10W 1.5K	1	
R672,73		ERJ6GEYG102	M.RESISTOR CH 1/10W 1K	2	
R674		ERJ6GEYG561	M.RESISTOR CH 1/10W 560	1	
R675		ERJ6GEY0R00	M.RESISTOR CH 1/10W 0	1	
R676		ERJ6GEYG152	M.RESISTOR CH 1/10W 1.5K	1	
R677		ERJ6GEYG102	M.RESISTOR CH 1/10W 1K	1	
R678		ERJ6GEYG152	M.RESISTOR CH 1/10W 1.5K	1	
R679		ERJ6GEYG102	M.RESISTOR CH 1/10W 1K	1	
R680		ERJ6GEYG561	M.RESISTOR CH 1/10W 560	1	
R681		ERJ6GEYG330	M.RESISTOR CH 1/10W 33	1	
R682		ERJ6GEYG681	M.RESISTOR CH 1/10W 680	1	
R683		ERJ6GEYG124	M.RESISTOR CH 1/10W 120K	1	
R684		ERJ6GEYG152	M.RESISTOR CH 1/10W 1.5K	1	
R685		ERJ6GEYG102	M.RESISTOR CH 1/10W 1K	1	
R686		ERJ6GEYG181	M.RESISTOR CH 1/10W 180	1	
R687		ERJ6GEYG102	M.RESISTOR CH 1/10W 1K	1	
R688		ERJ6GEYG561	M.RESISTOR CH 1/10W 560	1	
R689		ERJ6GEYG152	M.RESISTOR CH 1/10W 1.5K	1	
R690,91		ERJ6GEYG122	M.RESISTOR CH 1/10W 1.2K	2	
R692,93		ERJ6GEYG470	M.RESISTOR CH 1/10W 47	2	
R694,95		ERJ6GEYG102	M.RESISTOR CH 1/10W 1K	2	
R696,97		ERJ6GEYG122	M.RESISTOR CH 1/10W 1.2K	2	
R698,99		ERJ6GEYG470	M.RESISTOR CH 1/10W 47	2	
R700,01		ERJ6GEYG102	M.RESISTOR CH 1/10W 1K	2	
R702		ERJ6GEYG103	M.RESISTOR CH 1/10W 10K	1	
R703		ERJ6GEYG472	M.RESISTOR CH 1/10W 4.7K	1	
R704-07		ERJ6GEYG102	M.RESISTOR CH 1/10W 1K	4	
R709		ERJ6GEY0R00	M.RESISTOR CH 1/10W 0	1	
R711		ERJ6GEY0R00	M.RESISTOR CH 1/10W 0	1	
R714,15		ERJ6GEY0R00	M.RESISTOR CH 1/10W 0	2	
R716		ERJ6GEYG101	M.RESISTOR CH 1/10W 100	1	
R717		ERJ6GEYG122	M.RESISTOR CH 1/10W 1.2K	1	
R718		ERJ6GEYG154	M.RESISTOR CH 1/10W 150K	1	
R719		ERJ6GEYG102	M.RESISTOR CH 1/10W 1K	1	
R720		ERJ6GEYG681	M.RESISTOR CH 1/10W 680	1	
R721		ERJ6GEYG470	M.RESISTOR CH 1/10W 47	1	
R722		ERJ6GEYG182	M.RESISTOR CH 1/10W 1.8K	1	
R723		VRE0034E151	M.RESISTOR CH 1/10W 150	1	
R724		ERJ6GEYG152	M.RESISTOR CH 1/10W 1.5K	1	
R725		ERJ6GEYG470	M.RESISTOR CH 1/10W 47	1	
R726		ERJ6GEYG472	M.RESISTOR CH 1/10W 4.7K	1	
R727		ERJ6GEYG103	M.RESISTOR CH 1/10W 10K	1	
R728		ERJ6GEYG561	M.RESISTOR CH 1/10W 560	1	
R729		ERJ6GEYG391	M.RESISTOR CH 1/10W 390	1	
R730		ERJ6GEYG561	M.RESISTOR CH 1/10W 560	1	
R731		ERJ6GEYG391	M.RESISTOR CH 1/10W 390	1	
R732		ERJ6GEYG561	M.RESISTOR CH 1/10W 560	1	
R733		ERJ6GEYG391	M.RESISTOR CH 1/10W 390	1	
R734		ERJ6GEYG561	M.RESISTOR CH 1/10W 560	1	
R735		ERJ6GEYG391	M.RESISTOR CH 1/10W 390	1	
R736		ERJ6GEYG101	M.RESISTOR CH 1/10W 100	1	
R737		ERJ6GEYG122	M.RESISTOR CH 1/10W 1.2K	1	
R739,40		ERJ6GEYG152	M.RESISTOR CH 1/10W 1.5K	2	
R741		ERJ6GEYG105	M.RESISTOR CH 1/10W 1M	1	
R742		ERJ6GEYG122	M.RESISTOR CH 1/10W 1.2K	1	
R743		ERJ6GEYG472	M.RESISTOR CH 1/10W 4.7K	1	
R744		ERJ6GEY0R00	M.RESISTOR CH 1/10W 0	1	
R800		ERJ6GEYG223	M.RESISTOR CH 1/10W 22K	1	
R801		ERJ6GEYG562	M.RESISTOR CH 1/10W 5.6K	1	
R802		ERJ6GEYG331	M.RESISTOR CH 1/10W 330	1	
R803		ERJ6GEYG103	M.RESISTOR CH 1/10W 10K	1	
R804		ERJ6GEYG183	M.RESISTOR CH 1/10W 18K	1	
R805		ERJ6GEYG102	M.RESISTOR CH 1/10W 1K	1	
R806		ERJ6GEYG472	M.RESISTOR CH 1/10W 4.7K	1	
R807		ERJ6GEYG152	M.RESISTOR CH 1/10W 1.5K	1	
R808-10		ERJ6GEYG122	M.RESISTOR CH 1/10W 1.2K	3	
R811		ERJ6GEYG222	M.RESISTOR CH 1/10W 2.2K	1	
R812-14		ERJ6GEYG122	M.RESISTOR CH 1/10W 1.2K	3	
R815		ERJ6GEYG222	M.RESISTOR CH 1/10W 2.2K	1	
R816		ERJ6GEYG122	M.RESISTOR CH 1/10W 1.2K	1	
R817		ERJ6GEYG392	M.RESISTOR CH 1/10W 3.9K	1	
R819,20		ERJ6GEYG103	M.RESISTOR CH 1/10W 10K	2	

Ref.No.		Part No.	Part Name & Description	Pcs	Remarks
R821		ERJ6GEYG392	M.RESISTOR CH 1/10W 3.9K	1	
R822,23		ERJ6GEYG103	M.RESISTOR CH 1/10W 10K	2	
R826		ERJ6GEYG153	M.RESISTOR CH 1/10W 15K	1	
R827		ERJ6GEYG392	M.RESISTOR CH 1/10W 3.9K	1	
R828		ERJ6GEYG562	M.RESISTOR CH 1/10W 5.6K	1	
R829		ERJ6GEYG103	M.RESISTOR CH 1/10W 10K	1	
R830		ERJ6GEYG122	M.RESISTOR CH 1/10W 1.2K	1	
R831		ERJ6GEYG222	M.RESISTOR CH 1/10W 2.2K	1	
R832		ERJ6GEYG392	M.RESISTOR CH 1/10W 3.9K	1	
R833		ERJ6GEYG122	M.RESISTOR CH 1/10W 1.2K	1	
R834		ERJ6GEYG182	M.RESISTOR CH 1/10W 1.8K	1	
R835		ERJ6GEYG392	M.RESISTOR CH 1/10W 3.9K	1	
R836		ERJ6GEYG682	M.REISITOR CH 1/10W 6.8K	1	
R837		ERJ6GEYG392	M.RESISTOR CH 1/10W 3.9K	1	
R838		ERJ6GEYG682	M.REISITOR CH 1/10W 6.8K	1	
R839,40		ERJ6GEYG392	M.RESISTOR CH 1/10W 3.9K	2	
R841		ERJ6GEYG682	M.REISITOR CH 1/10W 6.8K	1	
R842		ERJ6GEYG392	M.RESISTOR CH 1/10W 3.9K	1	
R843		ERJ6GEYG682	M.REISITOR CH 1/10W 6.8K	1	
R844-46		ERJ6GEYG392	M.RESISTOR CH 1/10W 3.9K	3	
R847		ERJ6GEY0R00	M.RESISTOR CH 1/10W 0	1	
R848		ERJ6GEYG102	M.RESISTOR CH 1/10W 1K	1	
R849		ERJ6GEY0R00	M.RESISTOR CH 1/10W 0	1	
R850		ERJ6GEYG102	M.RESISTOR CH 1/10W 1K	1	
R851		ERJ6GEY0R00	M.RESISTOR CH 1/10W 0	1	
R852		ERJ6GEYG102	M.RESISTOR CH 1/10W 1K	1	
R853		ERJ6GEY0R00	M.RESISTOR CH 1/10W 0	1	
R854		ERJ6GEYG102	M.RESISTOR CH 1/10W 1K	1	
R855		ERJ6GEY0R00	M.RESISTOR CH 1/10W 0	1	
R856		ERJ6GEYG102	M.RESISTOR CH 1/10W 1K	1	
R857		ERJ6GEY0R00	M.RESISTOR CH 1/10W 0	1	
R858		ERJ6GEYG102	M.RESISTOR CH 1/10W 1K	1	
R859-62		ERJ6GEY0R00	M.RESISTOR CH 1/10W 0	4	
R867		ERJ6GEYG104	M.RESISTOR CH 1/10W 100K	1	
R868		ERJ6GEYG562	M.RESISTOR CH 1/10W 5.6K	1	
R869		ERJ6GEYG273	M.RESISTOR CH 1/10W 27K	1	
R870		ERJ6GEYG472	M.RESISTOR CH 1/10W 4.7K	1	
R871		ERJ6GEYG562	M.RESISTOR CH 1/10W 5.6K	1	
R872		ERJ6GEYG273	M.RESISTOR CH 1/10W 27K	1	
R873		ERJ6GEY0R00	M.RESISTOR CH 1/10W 0	1	
R876		ERJ6GEY0R00	M.RESISTOR CH 1/10W 0	1	
R878		ERJ6GEY0R00	M.RESISTOR CH 1/10W 0	1	
R880		ERJ6GEY0R00	M.RESISTOR CH 1/10W 0	1	
R882		ERJ6GEY0R00	M.RESISTOR CH 1/10W 0	1	
R883,84		ERJ6GEYG103	M.RESISTOR CH 1/10W 10K	2	
R886,87		ERJ6GEY0R00	M.RESISTOR CH 1/10W 0	2	
R889,90		ERJ6GEYG392	M.RESISTOR CH 1/10W 3.9K	2	
R891		ERJ6GEYG563	M.RESISTOR CH 1/10W 56K	1	
R892		ERJ6GEYG472	M.RESISTOR CH 1/10W 4.7K	1	
R893		ERJ6GEYG272	M.RESISTOR CH 1/10W 2.7K	1	
R894		ERJ6GEYG102	M.RESISTOR CH 1/10W 1K	1	
R895		ERJ6GEYG103	M.RESISTOR CH 1/10W 10K	1	
R896		ERJ6GEYG122	M.RESISTOR CH 1/10W 1.2K	1	
R897		ERJ6GEYG222	M.RESISTOR CH 1/10W 2.2K	1	
R898,99		ERJ6GEYG273	M.RESISTOR CH 1/10W 27K	2	
R900		ERJ6GEYG332	M.RESISTOR CH 1/10W 3.3K	1	
R901-05		ERJ6GEYG103	M.RESISTOR CH 1/10W 10K	5	
R906		ERJ6GEYG224	M.RESISTOR CH 1/10W 220K	1	
R907-09		ERJ6GEYG103	M.RESISTOR CH 1/10W 10K	3	
R910		ERJ6GEYG152	M.RESISTOR CH 1/10W 1.5K	1	
R911		ERJ6GEYG392	M.RESISTOR CH 1/10W 3.9K	1	
R912-16		ERJ6GEYG103	M.RESISTOR CH 1/10W 10K	5	
R917		ERJ6GEYG562	M.RESISTOR CH 1/10W 5.6K	1	
R925,26		ERJ6GEYG122	M.RESISTOR CH 1/10W 1.2K	2	
R928		ERJ6GEYG562	M.RESISTOR CH 1/10W 5.6K	1	
R929,30		ERJ6GEYG392	M.RESISTOR CH 1/10W 3.9K	2	
R1001		ERJ6GEYG681	M.RESISTOR CH 1/10W 680	1	
R1002		ERJ6GEYG621	M.RESISTOR CH 1/10W 620	1	
SW201		VSS0207	SWITCH	1	
SW202,03		VJP1990	CONNECTOR	2	
SW800		VSS0126	SWITCH	1	
SW801		VJP1990	CONNECTOR	1	

Ref.No.		Part No.	Part Name & Description	Pcs	Remarks
SWS801		VJS1990	CONNECTOR	1	
TH501-04		ERTD2FGL102S	THERMISTOR 1K	4	
TP1-P4		VJR0646	TEST POINT	4	
TP6,P7		VJR0646	TEST POINT	2	
TP201-04		VJR0646	TEST POINT	4	
TP206		VJR0646	TEST POINT	1	
TP501-03		VJR0646	TEST POINT	3	
TP505-07		VJR0646	TEST POINT	3	
TP800-03		VJR0646	TEST POINT	4	
TP805		VJR0646	TEST POINT	1	
TPG1,G2		VJR0646	TEST POINT	2	
TPG201		VJR0646	TEST POINT	1	
TPG501		VJR0646	TEST POINT	1	
VC201		ECV1ZW20X60	V.CAPACITOR 20P	1	
VC501		ECV1ZW30X53	V.CAPACITOR 30P	1	
VR1		VRV0109B201	V.RESISTOR 200	1	
VR2		VRV0109B502	V.RESISTOR 5K	1	
VR3		VRV0109B501	V.RESISTOR 500	1	
VR4		VRV0109B502	V.RESISTOR 5K	1	
VR200		VRV0064B501	V.RESISTOR 500	1	
VR201		VRV0064B503	V.RESISTOR 50K	1	
VR202		VRV0064B103	V.RESISTOR 10K	1	
VR203		VRV0109B501	V.RESISTOR 500	1	
VR204		VRV0109B503	V.RESISTOR 50K	1	
VR205		VRV0109B501	V.RESISTOR 500	1	
VR206		VRV0109B503	V.RESISTOR 50K	1	
VR207		VRV0109B102	V.RESISTOR 1K	1	
VR208,09		VRV0109B501	V.RESISTOR 500	2	
VR210-13		VRV0109B102	V.RESISTOR 1K	4	
VR501		VRV0109B501	V.RESISTOR 500	1	
VR502		VRV0109B503	V.RESISTOR 50K	1	
VR503-06		VRV0064B503	V.RESISTOR 50K	4	
VR507		VRV0109B201	V.RESISTOR 200	1	
VR508		VRV0109B101	V.RESISTOR 100	1	
VR509		VRV0109B201	V.RESISTOR 200	1	
VR510		VRV0109B203	V.RESISTOR 20K	1	
VR511		VRV0109B502	V.RESISTOR 5K	1	
VR512		VRV0064B503	V.RESISTOR 50K	1	
VR513,14		VRV0109B102	V.RESISTOR 1K	2	
VR515,16		VRV0109B501	V.RESISTOR 500	2	
VR517		VRV0064B503	V.RESISTOR 50K	1	
VR800,01		VRV0109B202	V.RESISTOR 2K	1	
VR802,03		VRV0109B203	V.RESISTOR 20K	2	
			MISCELLANEOUS		
		VML2143	CARD PULLER	1	
		VML2144	CARD PULLER	1	
		VMZ1547	BARRIER	1	
		VXA3966	P.C.B. SHIELD PLATE	1	
		XNG26E	NUT	4	
		XYNV3+K6FR	SCREW	5	
		XYN26+C12	SCREW	4	

Ref.No.		Part No.	Part Name & Description	Pcs	Remarks
	■	VEP83098E	P.C.BOARD W/COMPONENT		FOR AU-65H
			W3 MOD & DEMOD		
			CAPACITORS		
C1,C2		ECEA1CU101	E.CAPACITOR 16V 100U	2	
C3		ECUM1E104ZFN	C.CAPACITOR CH 25V 0.1U	1	
C4		ECUM1H470JCN	C.CAPACITOR CH 50V 47P	1	
C5		ECUM1H020CCN	C.CAPACITOR CH 50V 2P	1	
C6		ECUM1H080DCN	C.CAPACITOR CH 50V 80P	1	
C7		ECUM1E104ZFN	C.CAPACITOR CH 25V 0.1U	1	
C10,11		ECUM1E104ZFN	C.CAPACITOR CH 25V 0.1U	2	
C12,13		ECUM1H103KBN	C.CAPACITOR CH 50V 0.01U	2	
C14		ECEA0JU470	E.CAPACITOR 6.3V 47U	1	
C15		VCM0028	M.CAPACITOR 342P	1	
C16		ECEA0JU470	E.CAPACITOR 6.3V 47U	1	
C17		VCM0027	M.CAPACITOR 301P	1	
C18-20		ECUM1H120JCN	C.CAPACITOR CH 50V 12P	3	
C21		ECUM1H560JCN	C.CAPACITOR CH 50V 56P	1	
C22		ECUM1H150JCN	C.CAPACITOR CH 50V 15P	1	
C23		ECUM1H221JCN	C.CAPACITOR CH 50V 220P	1	
C24		ECUM1H104KBM	C.CAPACITOR CH 50V 0.1U	1	
C25		ECUM1C104KBN	C.CAPACITOR CH 16V 0.1U	1	
C26		ECUM1H331JCN	C.CAPACITOR CH 50V 330P	1	
C27		ECUM1E104ZFN	C.CAPACITOR CH 25V 0.1U	1	
C28		ECUM1H472KBN	C.CAPACITOR CH 50V 4700P	1	
C29,30		ECUM1E104ZFN	C.CAPACITOR CH 25V 0.1U	2	
C31		ECEA1HUR47	E.CAPACITOR 50V 0.47U	1	
C32		VCM0047	M.CAPACITOR	1	
C33		ECUM1H103KBN	C.CAPACITOR CH 50V 0.01U	1	
C34		ECEA1AU221	E.CAPACITOR 10V 220U	1	
C35		ECUM1E104ZFN	C.CAPACITOR CH 25V 0.1U	1	
C36		ECUM1H270JUN	C.CAPACITOR CH 50V 27P	1	
C37		ECUM1H103KBN	C.CAPACITOR CH 50V 0.01U	1	
C38		ECUM1E104ZFN	C.CAPACITOR CH 25V 0.1U	1	
C39		ECUM1H390JCN	C.CAPACITOR CH 50V 39P	1	
C40		ECUM1H101JCN	C.CAPACITOR CH 50V 100P	1	
C42		ECEA1CU470	E.CAPACITOR 16V 47U	1	
C43,44		ECUM1H103KBN	C.CAPACITOR CH 50V 0.01U	2	
C45,46		ECUM1E104ZFN	C.CAPACITOR CH 25V 0.1U	2	
C47		ECUM1H221JCN	C.CAPACITOR CH 50V 220P	1	
C48		ECUM1H103KBN	C.CAPACITOR CH 50V 0.01U	1	
C49		ECUM1H332KBN	C.CAPACITOR CH 50V 3300P	1	
C50,51		ECUM1H560JCN	C.CAPACITOR CH 50V 56P	2	
C52		ECUM1E104ZFN	C.CAPACITOR CH 25V 0.1U	1	
C54		ECUM1H471JCN	C.CAPACITOR CH 50V 470P	1	
C55		ECUM1H270JCN	C.CAPACITOR CH 50V 27P	1	
C56		ECUM1E104ZFN	C.CAPACITOR CH 25V 0.1U	1	
C57		ECEA1CU101	E.CAPACITOR 16V 100U	1	
C60		ECUM1E104ZFN	C.CAPACITOR CH 25V 0.1U	1	
C61		ECEA1CU101	E.CAPACITOR 16V 100U	1	
C62		ECUM1E104ZFN	C.CAPACITOR CH 25V 0.1U	1	
C63		ECEA1CU101	E.CAPACITOR 16V 100U	1	
C64		ECUM1E104ZFN	C.CAPACITOR CH 25V 0.1U	1	
C65		ECSF1CE106	E.CAPACITOR 16V 10U	1	
C66		ECUM1E104ZFN	C.CAPACITOR CH 25V 0.1U	1	
C67		ECSF1CE106	E.CAPACITOR 16V 10U	1	
C68		ECUM1E104ZFN	C.CAPACITOR CH 25V 0.1U	1	
C69,70		ECSF1CE106	E.CAPACITOR 16V 10U	2	
C71		ECUM1E104ZFN	C.CAPACITOR CH 25V 0.1U	1	
C72		ECEA1CU101	E.CAPACITOR 16V 100U	1	
C73,74		ECUM1E104ZFN	C.CAPACITOR CH 25V 0.1U	2	
C201,02		ECEA1CU101	E.CAPACITOR 16V 100U	2	
C203		ECUM1H470JCN	C.CAPACITOR CH 50V 47P	1	
C204		ECUM1H020CCN	C.CAPACITOR CH 50V 2P	1	
C205,06		ECUM1E104ZFN	C.CAPACITOR CH 25V 0.1U	2	
C207		ECEA1AU101	E.CAPACITOR 10V 100U	1	
C208		VCM0028	M.CAPACITOR 342P	1	
C209		VCM0027	M.CAPACITOR 301P	1	
C210-12		ECUM1H120JCN	C.CAPACITOR CH 50V 12P	3	
C215		ECUM1H180JCN	C.CAPACITOR CH 50V 18P	1	
C216		ECUM1H560JCN	C.CAPACITOR CH 50V 56P	1	
C217		ECUM1H103KBN	C.CAPACITOR CH 50V 0.01U	1	
C218,19		ECUM1E104ZFN	C.CAPACITOR CH 25V 0.1U	2	
C220,21		ECUM1H103KBN	C.CAPACITOR CH 50V 0.01U	2	
C222		ECEA1HUR47	E.CAPACITOR 50V 0.47U	1	
C223		ECUM1E104ZFN	C.CAPACITOR CH 25V 0.1U	1	
C224		ECUM1H271JCN	C.CAPACITOR CH 50V 270P	1	
C225		ECUM1H560JCN	C.CAPACITOR CH 50V 56P	1	
C226		VCM0023	M.CAPACITOR 379P	1	
C227		ECUM1E104ZFN	C.CAPACITOR CH 25V 0.1U	1	
C228		ECUM1H103KBN	C.CAPACITOR CH 50V 0.01U	1	
C229		ECEA1AU221	E.CAPACITOR 10V 220U	1	
C230		ECUM1E104ZFN	C.CAPACITOR CH 25V 0.1U	1	
C231		ECUM1H220JUN	C.CAPACITOR CH 50V 22P	1	
C232		ECUM1H103KBN	C.CAPACITOR CH 50V 0.01U	1	
C233		ECUM1H120JCN	C.CAPACITOR CH 50V 12P	1	
C234		ECUM1H180JCN	C.CAPACITOR CH 50V 18P	1	
C235		ECUM1H470JCN	C.CAPACITOR CH 50V 47P	1	
C236		ECUM1H050DCN	C.CAPACITOR CH 50V 50P	1	
C237		ECUM1H220JCN	C.CAPACITOR CH 50V 22P	1	
C238		ECUM1H180JCN	C.CAPACITOR CH 50V 18P	1	
C239		ECUM1H101JCN	C.CAPACITOR CH 50V 100P	1	
C240		ECUM1H050DCN	C.CAPACITOR CH 50V 50P	1	
C241		ECUM1H220JCN	C.CAPACITOR CH 50V 22P	1	
C242		ECUM1H221JCN	C.CAPACITOR CH 50V 220P	1	
C243		ECUM1E104ZFN	C.CAPACITOR CH 25V 0.1U	1	
C244		ECUM1H103KBN	C.CAPACITOR CH 50V 0.01U	1	
C245		ECEA1CU470	E.CAPACITOR 16V 47U	1	
C246-48		ECUM1E104ZFN	C.CAPACITOR CH 25V 0.1U	3	
C252,53		ECUM1H103KBN	C.CAPACITOR CH 50V 0.01U	2	
C254		ECEA1CU470	E.CAPACITOR 16V 47U	1	
C255		ECUM1H103KBN	C.CAPACITOR CH 50V 0.01U	1	
C256,57		ECUM1E104ZFN	C.CAPACITOR CH 25V 0.1U	2	
C258		ECUM1H150JCN	C.CAPACITOR CH 50V 15P	1	
C259		ECUM1H220JCN	C.CAPACITOR CH 50V 22P	1	
C260		ECUM1H103KBN	C.CAPACITOR CH 50V 0.01U	1	
C261		ECUM1H270JCN	C.CAPACITOR CH 50V 27P	1	
C301,02		ECUM1H103KBN	C.CAPACITOR CH 50V 0.01U	2	
C303		ECUM1H220JCN	C.CAPACITOR CH 50V 22P	1	
C304,05		ECUM1H103KBN	C.CAPACITOR CH 50V 0.01U	2	
C306		ECUM1H220JCN	C.CAPACITOR CH 50V 22P	1	
C307		ECEA1AU101	E.CAPACITOR 10V 100U	1	
C308,09		ECUM1H103KBN	C.CAPACITOR CH 50V 0.01U	2	
C310		ECEA1AU101	E.CAPACITOR 10V 100U	1	
C311		ECUM1H103KBN	C.CAPACITOR CH 50V 0.01U	1	
C316		ECUM1E104ZFN	C.CAPACITOR CH 25V 0.1U	1	
C322		ECUM1E104ZFN	C.CAPACITOR CH 25V 0.1U	1	
C325		ECUM1E104ZFN	C.CAPACITOR CH 25V 0.1U	1	
C342		ECUM1H103KBN	C.CAPACITOR CH 50V 0.01U	1	
C343		ECUM1H150JCN	C.CAPACITOR CH 50V 15P	1	
C344		ECUM1H101JCN	C.CAPACITOR CH 50V 100P	1	
C345		ECUM1H100DCN	C.CAPACITOR CH 50V 10P	1	
C346		ECUM1H103KBN	C.CAPACITOR CH 50V 0.01U	1	
C347,48		ECEA1AU101	E.CAPACITOR 10V 100U	2	
C349		ECUM1H103KBN	C.CAPACITOR CH 50V 0.01U	1	
C350		ECUM1H820JCN	C.CAPACITOR CH 50V 82P	1	
C351,52		ECUM1H103KBN	C.CAPACITOR CH 50V 0.01U	2	
C353		ECUM1H680JCN	C.CAPACITOR CH 50V 68P	1	
C354,55		ECUM1H103KBN	C.CAPACITOR CH 50V 0.01U	2	
C356		ECUM1E104ZFN	C.CAPACITOR CH 25V 0.1U	1	
C357		ECEA1HU2R2	E.CAPACITOR 50V 2.2U	1	
C358		ECEA1AU101	E.CAPACITOR 10V 100U	1	
C377,78		ECUM1H103KBN	C.CAPACITOR CH 50V 0.01U	2	
C380		ECUM1E104ZFN	C.CAPACITOR CH 25V 0.1U	1	
C381		ECUM1H103KBN	C.CAPACITOR CH 50V 0.01U	1	
C382		ECUM1E104ZFN	C.CAPACITOR CH 25V 0.1U	1	
C383		ECEA1AU101	E.CAPACITOR 10V 100U	1	
C386		ECUM1H050DCN	C.CAPACITOR CH 50V 50P	1	
C387		ECUM1H100DCN	C.CAPACITOR CH 50V 10P	1	
C389		ECUM1H331JCN	C.CAPACITOR CH 50V 330P	1	
C391		ECUM1H470JCN	C.CAPACITOR CH 50V 47P	1	
C392		ECUM1H103KBN	C.CAPACITOR CH 50V 0.01U	1	
C393		ECEA1AU101	E.CAPACITOR 10V 100U	1	

Ref.No.		Part No.	Part Name & Description	Pcs	Remarks
C394		ECUM1H103KBN	C.CAPACITOR CH 50V 0.01U	1	
C395		ECUM1E104ZFN	C.CAPACITOR CH 25V 0.1U	1	
C396,97		ECUM1H103KBN	C.CAPACITOR CH 50V 0.01U	2	
C398		ECUM1H180JCN	C.CAPACITOR CH 50V 18P	1	
C399		ECUM1H103KBN	C.CAPACITOR CH 50V 0.01U	1	
C400		ECUM1E104ZFN	C.CAPACITOR CH 25V 0.1U	1	
C401-03		ECUM1H103KBN	C.CAPACITOR CH 50V 0.01U	3	
C404		ECEA1AU101	E.CAPACITOR 10V 100U	1	
C405-07		ECUM1E104ZFN	C.CAPACITOR CH 25V 0.1U	3	
C408,09		ECUM1H270JCN	C.CAPACITOR CH 50V 27P	2	
C410		ECEA1AU471	E.CAPACITOR 10V 470U	1	
C411		ECUM1E104ZFN	C.CAPACITOR CH 25V 0.1U	1	
C412		ECUM1H221JCN	C.CAPACITOR CH 50V 220P	1	
C413		ECEA1AU101	E.CAPACITOR 10V 100U	1	
C414		ECUM1H470JCN	C.CAPACITOR CH 50V 47P	1	
C415		ECUM1H180JCN	C.CAPACITOR CH 50V 18P	1	
C416		ECUM1H181JCN	C.CAPACITOR CH 50V 180P	1	
C417,18		ECUM1E104ZFN	C.CAPACITOR CH 25V 0.1U	2	
C419		ECUM1H331JCN	C.CAPACITOR CH 50V 330P	1	
C420		ECUM1H220JCN	C.CAPACITOR CH 50V 22P	1	
C421		ECUM1H680JCN	C.CAPACITOR CH 50V 68P	1	
C422		ECUM1H330JCN	C.CAPACITOR CH 50V 33P	1	
C423		ECEA1AU101	E.CAPACITOR 10V 100U	1	
C424		ECEA1CU100	E.CAPACITOR 16V 10U	1	
C425		ECUM1H221JCN	C.CAPACITOR CH 50V 220P	1	
C426		VCM0044	M.CAPACITOR 130P	1	
C427		VCM0023	M.CAPACITOR 379P	1	
C428		ECUM1H680JCN	C.CAPACITOR CH 50V 68P	1	
C429		ECUM1H390JCN	C.CAPACITOR CH 50V 39P	1	
C430		ECUM1H331JCN	C.CAPACITOR CH 50V 330P	1	
C431		ECUM1H270JCN	C.CAPACITOR CH 50V 27P	1	
C432		ECEA0JU221	E.CAPACITOR 6.3V 220U	1	
C433		ECUM1H470JCN	C.CAPACITOR CH 50V 47P	1	
C434		ECUM1H560JCN	C.CAPACITOR CH 50V 56P	1	
C435		ECUM1H020CCN	C.CAPACITOR CH 50V 2P	1	
C436,37		ECUM1E104ZFN	C.CAPACITOR CH 25V 0.1U	2	
C440		ECUM1H470JCN	C.CAPACITOR CH 50V 47P	1	
C441		ECUM1H103KBN	C.CAPACITOR CH 50V 0.01U	1	
C442,43		ECEA1CU221	E.CAPACITOR 16V 220U	2	
C444,45		ECUM1H103KBN	C.CAPACITOR CH 50V 0.01U	2	
C446,47		VCM0027	M.CAPACITOR 301P	2	
C448		ECEA1AU101	E.CAPACITOR 10V 100U	1	
C453		ECUM1E104ZFN	C.CAPACITOR CH 25V 0.1U	1	
C467		ECUM1E104ZFN	C.CAPACITOR CH 25V 0.1U	1	
C468		ECUM1H103KBN	C.CAPACITOR CH 50V 0.01U	1	
C470		ECUM1H330JCN	C.CAPACITOR CH 50V 33P	1	
C471		ECUM1H060DCN	C.CAPACITOR CH 50V 6P	1	
C472		VCC0037F062	C.CAPACITOR 50V 62P	1	
C473		ECUM1H182JN	C.CAPACITOR CH 50V 1800P	1	
C474		ECUM1E104ZFN	C.CAPACITOR CH 25V 0.1U	1	
C475		ECUM1H103KBN	C.CAPACITOR CH 50V 0.01U	1	
C476		ECEA1AU101	E.CAPACITOR 10V 100U	1	
C477		ECUM1H050DCN	C.CAPACITOR CH 50V 50P	1	
C478		ECEA1AU101	E.CAPACITOR 10V 100U	1	
C701,02		ECUM1H103KBN	C.CAPACITOR CH 50V 0.01U	2	
C703		ECEA1AU101	E.CAPACITOR 10V 100U	1	
C704,05		ECUM1H103KBN	C.CAPACITOR CH 50V 0.01U	2	
C706		ECUM1H330JCN	C.CAPACITOR CH 50V 33P	1	
C725		ECUM1H180JCN	C.CAPACITOR CH 50V 18P	1	
C726		ECUM1H103KBN	C.CAPACITOR CH 50V 0.01U	1	
C727		ECUM1E104ZFN	C.CAPACITOR CH 25V 0.1U	1	
C728		ECUM1H220JCN	C.CAPACITOR CH 50V 22P	1	
C729		ECUM1H121JCN	C.CAPACITOR CH 50V 120P	1	
C730,31		ECUM1H103KBN	C.CAPACITOR CH 50V 0.01U	2	
C732		ECUM1H101JCN	C.CAPACITOR CH 50V 100P	1	
C733		ECEA1AU101	E.CAPACITOR 10V 100U	1	
C734		ECUM1H331JCN	C.CAPACITOR CH 50V 330P	1	
C735		ECEA1AU101	E.CAPACITOR 10V 100U	1	
C736		ECUM1H103KBN	C.CAPACITOR CH 50V 0.01U	1	
C737		ECUM1H101JCN	C.CAPACITOR CH 50V 100P	1	
C738		ECUM1H103KBN	C.CAPACITOR CH 50V 0.01U	1	
C740-42		ECUM1H103KBN	C.CAPACITOR CH 50V 0.01U	3	
C744		ECUM1E104ZFN	C.CAPACITOR CH 25V 0.1U	1	
C745		ECUM1H103KBN	C.CAPACITOR CH 50V 0.01U	1	
C746		ECUM1E104ZFN	C.CAPACITOR CH 25V 0.1U	1	

Ref.No.		Part No.	Part Name & Description	Pcs	Remarks
C747		ECEA1AU101	E.CAPACITOR 10V 100U	1	
C750		ECUM1H331JCN	C.CAPACITOR CH 50V 330P	1	
C751		ECUM1H101JCN	C.CAPACITOR CH 50V 100P	1	
C752		ECUM1H152JN	C.CAPACITOR CH 50V 1500P	1	
C753		ECUM1H220JCN	C.CAPACITOR CH 50V 22P	1	
C754		ECUM1H101JCN	C.CAPACITOR CH 50V 100P	1	
C755		ECUM1H220JCN	C.CAPACITOR CH 50V 22P	1	
C756		ECUM1H680JCN	C.CAPACITOR CH 50V 68P	1	
C757		ECUM1H150JCN	C.CAPACITOR CH 50V 15P	1	
C758		ECUM1H050DCN	C.CAPACITOR CH 50V 50P	1	
C759		ECUM1E104ZFN	C.CAPACITOR CH 25V 0.1U	1	
C760		ECUM1H100DCN	C.CAPACITOR CH 50V 10P	1	
C762		ECUM1H221JCN	C.CAPACITOR CH 50V 220P	1	
C763		ECUM1H101JCN	C.CAPACITOR CH 50V 100P	1	
C764-66		ECUM1H103KBN	C.CAPACITOR CH 50V 0.01U	3	
C767		ECEA1AU101	E.CAPACITOR 10V 100U	1	
C768,69		ECUM1H103KBN	C.CAPACITOR CH 50V 0.01U	2	
C770		ECUM1H220JCN	C.CAPACITOR CH 50V 22P	1	
C771		ECUM1H471JCN	C.CAPACITOR CH 50V 470P	1	
C772		ECUM1E104ZFN	C.CAPACITOR CH 25V 0.1U	1	
C773-75		ECUM1H103KBN	C.CAPACITOR CH 50V 0.01U	3	
C776		ECUM1E104ZFN	C.CAPACITOR CH 25V 0.1U	1	
C777		ECEA1AU101	E.CAPACITOR 10V 100U	1	
C778,79		ECUM1E104ZFN	C.CAPACITOR CH 25V 0.1U	2	
C780,81		ECUM1H390JCN	C.CAPACITOR CH 50V 39P	2	
C782		ECEA1AU471	E.CAPACITOR 10V 470U	1	
C783		ECUM1E104ZFN	C.CAPACITOR CH 25V 0.1U	1	
C784		ECUM1H221JCN	C.CAPACITOR CH 50V 220P	1	
C785		ECEA1AU101	E.CAPACITOR 10V 100U	1	
C786		ECUM1H121JCN	C.CAPACITOR CH 50V 120P	1	
C787		ECUM1H100DCN	C.CAPACITOR CH 50V 10P	1	
C788		ECUM1H331JCN	C.CAPACITOR CH 50V 330P	1	
C789,90		ECUM1E104ZFN	C.CAPACITOR CH 25V 0.1U	2	
C791		ECUM1H331JCN	C.CAPACITOR CH 50V 330P	1	
C792		ECUM1H220JCN	C.CAPACITOR CH 50V 22P	1	
C793		ECUM1H680JCN	C.CAPACITOR CH 50V 68P	1	
C794		ECUM1H330JCN	C.CAPACITOR CH 50V 33P	1	
C796		ECEA1CU100	E.CAPACITOR 16V 10U	1	
C797		VCM0023	M.CAPACITOR 379P	1	
C799		ECEA0JU221	E.CAPACITOR 6.3V 220U	1	
C800		ECUM1H470JCN	C.CAPACITOR CH 50V 47P	1	
C801		ECUM1H020CCN	C.CAPACITOR CH 50V 2P	1	
C802		ECUM1H121JCN	C.CAPACITOR CH 50V 120P	1	
C803,04		ECUM1E104ZFN	C.CAPACITOR CH 25V 0.1U	2	
C805		ECUM1H470JCN	C.CAPACITOR CH 50V 47P	1	
C808		ECEA1CU221	E.CAPACITOR 16V 220U	1	
C810		ECEA1CU221	E.CAPACITOR 16V 220U	1	
C811,12		ECUM1H103KBN	C.CAPACITOR CH 50V 0.01U	2	
C813,14		VCM0027	M.CAPACITOR 301P	2	
C815		ECEA1AU101	E.CAPACITOR 10V 100U	1	
C821		ECUM1E104ZFN	C.CAPACITOR CH 25V 0.1U	1	
C836		ECUM1H470JCN	C.CAPACITOR CH 50V 47P	1	
C837		ECUM1H060DCN	C.CAPACITOR CH 50V 6P	1	
C838,39		ECUM1H100DCN	C.CAPACITOR CH 50V 10P	2	
C840		VCC0037F062	C.CAPACITOR 50V 62P	1	
C841		ECUM1H080DCN	C.CAPACITOR CH 50V 80P	1	
C842		ECUM1H820JCN	C.CAPACITOR CH 50V 82P	1	
C843		ECEA1AU101	E.CAPACITOR 10V 100U	1	
C844		ECUM1H103KBN	C.CAPACITOR CH 50V 0.01U	1	
C845		ECUM1H050DCN	C.CAPACITOR CH 50V 50P	1	
C846		ECEA1AU101	E.CAPACITOR 10V 100U	1	
D1		MA151WK	DIODE	1	
D2		MA151WA	DIODE	1	
D3		MA151WK	DIODE	1	
D201		MA151WK	DIODE	1	
D301		MA151WK	DIODE	1	
D303		MA151K	DIODE	1	
D305-07		MA151WK	DIODE	3	
D308,09		MA151WA	DIODE	2	
D701		MA151WK	DIODE	1	
D702,03		MA151K	DIODE	2	
D705,06		MA151WK	DIODE	2	

Ref.No.		Part No.	Part Name & Description	Pcs	Remarks
DL301		VLD0190	DELAY	1	
DL701		VLD0199	DELAY	1	
FL1		ELB5F100	FILTER	1	
FL201		ELB5F100	FILTER	1	
FL302		VLF0658	FILTER	1	
FL303		VLF0712	FILTER	1	
FL701		VLF0652	FILTER	1	
IC1		NE5539D	IC	1	
IC2		UPD4053BG	IC	1	
IC3		RC084M	IC	1	
IC4		RC082BM	IC	1	
IC5		AN6306S	IC	1	
IC6		MC14538BF	IC	1	
IC7		TC74HC221AF	IC	1	
IC9		AN79N09	IC	1	
IC10		AN79N09	IC	1	
IC11,12		AN79M05F	IC	2	
IC13		AN78M05F	IC	1	
IC14		AN78N05	IC	1	
IC15		AN78N09	IC	1	
IC16		AN78L05	IC	1	
IC17		AN78N09	IC	1	
IC201		NE5539D	IC	1	
IC202		TC74HC221AF	IC	1	
IC203		AN6306S	IC	1	
IC301		AN6308S	IC	1	
IC306		NJM1496M	IC	1	
IC307		UPD4053BG	IC	1	
IC310		AN6308S	IC	1	
IC311-15		10116D	IC	5	
IC316		SN74LS123NS	IC	1	
IC317		MC74HC00AF	IC	1	
IC319		NE5539D	IC	1	
IC326		RC082BM	IC	1	
IC327		AN6308S	IC	1	
IC701		AN6308S	IC	1	
IC705		NJM1496M	IC	1	
IC706		UPD4053BG	IC	1	
IC707		AN6308S	IC	1	
IC708-12		10116D	IC	5	
IC716		NE5539D	IC	1	
IC723		AN6308S	IC	1	
JC1-C4		VJF0304		4	
L1,L2		VLQEL05S101K	COIL 100UH	2	
L3		VLQEL05S180J	COIL 18UH	1	
L4		VLQEL05S151J	COIL 150UH	1	
L5		VLQEL05S101K	COIL 100UH	1	
L6		VLQEL05S1R0J	COIL 1UH	1	
L7		VLQEL05S101K	COIL 100UH	1	
L201,02		VLQEL05S101K	COIL 100UH	2	
L203		VLQEL05S180J	COIL 18UH	1	
L204		VLQEL05S561J	COIL 560UH	1	
L205		VLQEL05S101K	COIL 100UH	1	
L206		VLQEL05S4R7J	COIL 4.7UH	1	
L207		VLQEL05S6R8J	COIL 6.8UH	1	
L208		VLQEL05S2R7J	COIL 2.7UH	1	
L209		VLQEL05S390J	COIL 39UH	1	
L210		VLQEL05S101K	COIL 100UH	1	
L212		VLQEL05S101K	COIL 100UH	1	
L301		VLQEL05S101K	COIL 100UH	1	

Ref.No.		Part No.	Part Name & Description	Pcs	Remarks
L302,03		VLQEL05S100J	COIL 10UH	2	
L304		VLQEL05S101K	COIL 100UH	1	
L308		VLQEL05S3R3J	COIL 3.3UH	1	
L309,10		VLQEL05S101K	COIL 100UH	2	
L311		VLQEL05S330J	COIL 33UH	1	
L312		VLQEL05S2R7J	COIL 2.7UH	1	
L313		VLQEL05S101K	COIL 100UH	1	
L318		VLQEL05S101K	COIL 100UH	1	
L320,21		VLQEL05S2R2J	COIL 2.2UH	2	
L322		VLQEL05S180J	COIL 18UH	1	
L323		VLQEL05S101K	COIL 100UH	1	
L324		VLQEL05S1R0J	COIL 1UH	1	
L325-27		VLQEL05S101K	COIL 100UH	3	
L328		VLQEL05S6R8J	COIL 6.8UH	1	
L329		VLQEL05S101K	COIL 100UH	1	
L330		VLQEL05S3R3J	COIL 3.3UH	1	
L333		VLQEL05S101K	COIL 100UH	1	
L334		VLQEL05S6R8J	COIL 6.8UH	1	
L345		VLQEL05S1R0J	COIL 1UH	1	
L346		VLQEL05SR47K	COIL	1	
L347		VLQEL05S101K	COIL 100UH	1	
L701		VLQEL05S101K	COIL 100UH	1	
L702		VLQEL05S150J	COIL 15UH	1	
L709		VLQEL05S4R7J	COIL 4.7UH	1	
L710		VLQEL05S101K	COIL 100UH	1	
L711		VLQEL05S560J	COIL 56UH	1	
L712		VLQEL05S101K	COIL 100UH	1	
L713		VLQEL05S3R9J	COIL 3.9UH	1	
L715		VLQEL05S101K	COIL 100UH	1	
L716		VLQEL05S471J	COIL 470UH	1	
L717		VLQEL05S330J	COIL 33UH	1	
L718		VLQEL05S3R3J	COIL 3.3UH	1	
L719		VLQEL05S8R2J	COIL 8.2UH	1	
L720		VLQEL05S6R8J	COIL 6.8UH	1	
L721		VLQEL05S4R7J	COIL 4.7UH	1	
L722		VLQEL05S2R7J	COIL 2.7UH	1	
L723		VLQEL05S5R6J	COIL 5.6UH	1	
L724		VLQEL05S101K	COIL 100UH	1	
L725		VLQEL05S1R5J	COIL 1.5UH	1	
L726-28		VLQEL05S101K	COIL 100UH	3	
L729		VLQEL05S150J	COIL 15UH	1	
L731		VLQEL05S101K	COIL 100UH	1	
L732		VLQEL05S6R8J	COIL 6.8UH	1	
L737		VLQEL05S220J	COIL 22UH	1	
L743		VLQEL05S181J	COIL 180UH	1	
L744		VLQEL05S1R2J	COIL	1	
L745		VLQEL05S5R6J	COIL 5.6UH	1	
L746		VLQEL05S101K	COIL 100UH	1	
Q1		2SD601-R	TRANSISTOR CHIP	1	(Q,R)
Q2		2SC3757	TRANSISTOR	1	(Q,R)
Q3,Q4		2SA1226	TRANSISTOR	2	
Q7		2SC2480	TRANSISTOR	1	
Q8		2SA1462	TRANSISTOR	1	
Q9		2SC2295-B	TRANSISTOR CHIP	1	(B,C)
Q10		2SA1022-B	TRANSISTOR CHIP	1	(B,C)
Q11-13		2SA1226	TRANSISTOR	3	
Q14		2SC2295-B	TRANSISTOR CHIP	1	(B,C)
Q15		2SK374-R	TRANSISTOR	1	(Q,R)
Q16		2SA1226	TRANSISTOR	1	
Q17		2SC3757	TRANSISTOR	1	(Q,R)
Q18		2SA1226	TRANSISTOR	1	
Q19		2SC2295-B	TRANSISTOR CHIP	1	(B,C)
Q21		UN2213	TRANSISTOR-RESISTOR	1	
Q201		2SD601-R	TRANSISTOR CHIP	1	(Q,R)
Q202-04		2SC2480	TRANSISTOR	3	
Q206		2SC2295-B	TRANSISTOR CHIP	1	(B,C)
Q207		2SC2480	TRANSISTOR	1	
Q208		2SA1462	TRANSISTOR	1	
Q209		2SC2295-B	TRANSISTOR CHIP	1	(B,C)
Q210		2SA1022-B	TRANSISTOR CHIP	1	(B,C)
Q211		2SC2295-B	TRANSISTOR CHIP	1	(B,C)
Q212		2SA1022-B	TRANSISTOR CHIP	1	(B,C)

Ref.No.		Part No.	Part Name & Description	Pcs	Remarks
Q213		2SA1226	TRANSISTOR	1	
Q214		2SC2295-B	TRANSISTOR CHIP	1	(B,C)
Q215		2SC3757	TRANSISTOR	1	(Q,R)
Q216		2SC2295-B	TRANSISTOR CHIP	1	(B,C)
Q217		2SC3757	TRANSISTOR	1	(Q,R)
Q218		2SA1226	TRANSISTOR	1	
Q219		2SC2295-B	TRANSISTOR CHIP	1	(B,C)
Q301-04		2SC2295-B	TRANSISTOR CHIP	4	(B,C)
Q313,14		2SC2295-B	TRANSISTOR CHIP	2	(B,C)
Q315		2SA1022-B	TRANSISTOR CHIP	1	(B,C)
Q316		2SC2295-B	TRANSISTOR CHIP	1	(B,C)
Q317,18		2SA1022-B	TRANSISTOR CHIP	2	(B,C)
Q319		IMX4	TRANSISTOR	1	
Q320		UN2113	TRANSISTOR-RESISTOR	1	
Q324		2SC2295-B	TRANSISTOR CHIP	1	(B,C)
Q326		2SC2295-B	TRANSISTOR CHIP	1	(B,C)
Q327		2SA1022-B	TRANSISTOR CHIP	1	(B,C)
Q329-38		2SC2295-B	TRANSISTOR CHIP	10	(B,C)
Q339,40		UN2213	TRANSISTOR-RESISTOR	2	
Q341		2SA1462	TRANSISTOR	1	
Q342,43		2SC3757	TRANSISTOR	2	(Q,R)
Q344		2SC2295-B	TRANSISTOR CHIP	1	(B,C)
Q345		2SA1022-B	TRANSISTOR CHIP	1	(B,C)
Q346		2SC2480	TRANSISTOR	1	
Q347		2SA1462	TRANSISTOR	1	
Q348		2SC2480	TRANSISTOR	1	
Q349		2SA1226	TRANSISTOR	1	
Q356-61		UN2113	TRANSISTOR-RESISTOR	6	
Q376		2SA1462	TRANSISTOR	1	
Q377		2SA1226	TRANSISTOR	1	
Q378		2SC3757	TRANSISTOR	1	(Q,R)
Q379		2SC2480	TRANSISTOR	1	
Q382-84		2SC3757	TRANSISTOR	3	(Q,R)
Q385,86		2SC2295-B	TRANSISTOR CHIP	2	(B,C)
Q387		2SA1022-B	TRANSISTOR CHIP	1	(B,C)
Q388		2SD601-R	TRANSISTOR CHIP	1	(Q,R)
Q389		2SB709-R	TRANSISTOR CHIP	1	(Q,R)
Q390		2SA1226	TRANSISTOR	1	
Q391,92		2SD601-R	TRANSISTOR CHIP	2	(Q,R)
Q393		2SB709-R	TRANSISTOR CHIP	1	(Q,R)
Q701,02		2SA1022-B	TRANSISTOR CHIP	2	(B,C)
Q710,11		2SC2295-B	TRANSISTOR CHIP	2	(B,C)
Q712		2SA1022-B	TRANSISTOR CHIP	1	(B,C)
Q713		2SC2295-B	TRANSISTOR CHIP	1	(B,C)
Q714,15		2SA1022-B	TRANSISTOR CHIP	2	(B,C)
Q716		2SC2295-B	TRANSISTOR CHIP	1	(B,C)
Q718		2SC2295-B	TRANSISTOR CHIP	1	(B,C)
Q719		2SA1022-B	TRANSISTOR CHIP	1	(B,C)
Q721-30		2SC2295-B	TRANSISTOR CHIP	10	(B,C)
Q731		UN2213	TRANSISTOR-RESISTOR	1	
Q732		2SA1462	TRANSISTOR	1	
Q733		2SC2295-B	TRANSISTOR CHIP	1	(B,C)
Q734		2SA1022-B	TRANSISTOR CHIP	1	(B,C)
Q735		2SC2480	TRANSISTOR	1	
Q736		2SA1462	TRANSISTOR	1	
Q737		2SC2480	TRANSISTOR	1	
Q738		2SA1226	TRANSISTOR	1	
Q754		2SA1462	TRANSISTOR	1	
Q755		2SA1226	TRANSISTOR	1	
Q756		2SC3757	TRANSISTOR	1	(Q,R)
Q757		2SC2480	TRANSISTOR	1	
Q758-60		2SC3757	TRANSISTOR	3	(Q,R)
Q761		2SC2295-B	TRANSISTOR CHIP	1	(B,C)
Q762		2SA1022-B	TRANSISTOR CHIP	1	(B,C)
Q763		2SD601-R	TRANSISTOR CHIP	1	(Q,R)
Q764		2SB709-R	TRANSISTOR CHIP	1	(Q,R)
Q765		2SA1226	TRANSISTOR	1	
Q766		2SD601-R	TRANSISTOR CHIP	1	(Q,R)
			RESISTORS		
R1		ERJ6GEYG471	M.RESISTOR CH 1/10W 470	1	
R2		ERJ6GEYJ470	M.RESISTOR CH 1/10W 47	1	
R3		ERJ6GEYJ152	M.RESISTOR CH 1/10W 1.5K	1	

Ref.No.		Part No.	Part Name & Description	Pcs	Remarks
R4,R5		VRE0034E51A	M.RESISTOR CH 1/10W 357	2	
R6		ERJ6GEYJ101	M.RESISTOR CH 1/10W 100	1	
R7		ERJ6GEYG151	M.RESISTOR CH 1/10W 150	1	
R8		ERJ6GEYJ332	M.RESISTOR CH 1/10W 3.3K	1	
R9		ERJ6GEYJ561	M.RESISTOR CH 1/10W 560	1	
R10		ERJ6GEYJ332	M.RESISTOR CH 1/10W 3.3K	1	
R11		ERJ6GEYJ101	M.RESISTOR CH 1/10W 100	1	
R12		ERJ6GEYJ332	M.RESISTOR CH 1/10W 3.3K	1	
R13		ERJ6GEYJ103	M.RESISTOR CH 1/10W 10K	1	
R14,15		ERJ6GEYJ101	M.RESISTOR CH 1/10W 100	2	
R16		ERJ6GEYJ222	M.RESISTOR CH 1/10W 2.2K	1	
R17		ERJ6GEYJ682	M.RESISTOR CH 1/10W 6.8K	1	
R18		ERJ6GEYJ152	M.RESISTOR CH 1/10W 1.5K	1	
R19		ERJ6GEYJ103	M.RESISTOR CH 1/10W 10K	1	
R20		ERJ6GEYJ472	M.RESISTOR CH 1/10W 4.7K	1	
R27		ERJ6GEYG223	M.RESISTOR CH 1/10W 22K	1	
R28,29		ERJ6GEYJ221	M.RESISTOR CH 1/10W 220	2	
R30,31		ERJ6GEYJ183	M.RESISTOR CH 1/10W 18K	2	
R32,33		ERJ6GEYJ273	M.RESISTOR CH 1/10W 27K	2	
R34,35		ERJ6GEYJ681	M.RESISTOR CH 1/10W 680	2	
R36		ERJ6GEYG471	M.RESISTOR CH 1/10W 470	1	
R37		ERJ6GEYJ273	M.RESISTOR CH 1/10W 27K	1	
R38		VRE0034E43A	M.RESISTOR 1/10W	1	
R39		VRE0034E82A	M.RESISTOR 1/10W	1	
R40,41		VRE0034E89A	M.RESISTOR CH 1/10W 825	2	
R42		ERJ6GEYJ470	M.RESISTOR CH 1/10W 47	1	
R43		ERJ6GEYJ682	M.RESISTOR CH 1/10W 6.8K	1	
R44		ERJ6GEYJ152	M.RESISTOR CH 1/10W 1.5K	1	
R45		VRE0034E26A	M.RESISTOR CH 1/10W 182	1	
R46		ERJ6GEYJ222	M.RESISTOR CH 1/10W 2.2K	1	
R47		ERJ6GEYJ102	M.RESISTOR CH 1/10W 1K	1	
R48		ERJ6GEYJ331	M.RESISTOR CH 1/10W 330	1	
R49		ERJ6GEYJ181	M.RESISTOR CH 1/10W 180	1	
R50		ERJ6GEYJ101	M.RESISTOR CH 1/10W 100	1	
R51		ERJ6GEYJ332	M.RESISTOR CH 1/10W 3.3K	1	
R52		ERJ6GEYJ102	M.RESISTOR CH 1/10W 1K	1	
R53		ERJ6GEYJ221	M.RESISTOR CH 1/10W 220	1	
R54		ERJ6GEYK225	M.RESISTOR CH 1/10W 2.2M	1	
R55,56		ERJ6GEYJ101	M.RESISTOR CH 1/10W 100	2	
R57		ERJ6GEYG103	M.RESISTOR CH 1/10W 10K	1	
R58		ERJ6GEYJ105	M.RESISTOR CH 1/10W 1M	1	
R59		ERJ6GEYK225	M.RESISTOR CH 1/10W 2.2M	1	
R60		ERJ6GEYJ472	M.RESISTOR CH 1/10W 4.7K	1	
R61		ERJ6GEYJ682	M.RESISTOR CH 1/10W 6.8K	1	
R62		ERJ6GEYJ103	M.RESISTOR CH 1/10W 10K	1	
R63		ERJ6GEYJ101	M.RESISTOR CH 1/10W 100	1	
R64		ERJ6GEYG243	M.RESISTOR CH 1/10W 24K	1	
R65		ERJ6GEYJ103	M.RESISTOR CH 1/10W 10K	1	
R66		ERJ6GEYJ105	M.RESISTOR CH 1/10W 1M	1	
R67		VRE0034E27B	M.RESISTOR CH 1/10W 1.87K	1	
R68		ERJ6GEYK5R6	M.RESISTOR CH1/10W 5.6	1	
R69		VRE0034E751	M.RESISTOR CH 1/10W 750	1	
R70		ERJ6GEYJ222	M.RESISTOR CH 1/10W 2.2K	1	
R72		VRE006610822	M.RESISTOR	1	
R73,74		VRE006645820	M.RESISTOR	2	
R75		ERJ6GEYJ154	M.RESISTOR CH 1/10W 150K	1	
R76		ERJ6GEYJ184	M.RESISTOR CH 1/10W 180K	1	
R77		ERJ6GEYJ332	M.RESISTOR CH 1/10W 3.3K	1	
R78		ERJ6GEYJ470	M.RESISTOR CH 1/10W 47	1	
R79		VRE0034E51A	M.RESISTOR CH 1/10W 357	1	
R80		ERJ6GEYG151	M.RESISTOR CH 1/10W 150	1	
R81		ERJ6GEYJ102	M.RESISTOR CH 1/10W 1K	1	
R82,83		ERJ6GEYJ470	M.RESISTOR CH 1/10W 47	2	
R84,85		ERJ6GEYJ102	M.RESISTOR CH 1/10W 1K	2	
R86,87		ERJ6GEYJ101	M.RESISTOR CH 1/10W 100	2	
R88		ERJ6GEYJ222	M.RESISTOR CH 1/10W 2.2K	1	
R89		VRE0034E51A	M.RESISTOR CH 1/10W 357	1	
R90		ERJ6GEYJ102	M.RESISTOR CH 1/10W 1K	1	
R93		ERJ6GEYJ470	M.RESISTOR CH 1/10W 47	1	
R94		ERJ6GEYJ473	M.RESISTOR CH 1/10W 47K	1	
R95		ERJ6GEYJ153	M.RESISTOR CH 1/10W 15K	1	
R96		ERJ6GEYG223	M.RESISTOR CH 1/10W 22K	1	
R97		ERJ6GEYJ153	M.RESISTOR CH 1/10W 15K	1	
R98		ERJ6GEYJ103	M.RESISTOR CH 1/10W 10K	1	
R99		ERJ6GEYJ332	M.RESISTOR CH 1/10W 3.3K	1	

Ref.No.		Part No.	Part Name & Description	Pcs	Remarks
R102		ERJ6GEYG472	M.RESISTOR CH 1/10W 4.7K	1	
R103		ERJ6GEYG182	M.RESISTOR CH 1/10W 1.8K	1	
R104		ERJ6GEYG104	M.RESISTOR CH 1/10W 100K	1	
R105		ERJ6GEYJ222	M.RESISTOR CH 1/10W 2.2K	1	
R106		ERDS2TJ272	C.RESISTOR 1/4W 2.7K	1	
R201		ERJ6GEYG471	M.RESISTOR CH 1/10W 470	1	
R202		ERJ6GEYJ101	M.RESISTOR CH 1/10W 100	1	
R203		ERJ6GEYJ152	M.RESISTOR CH 1/10W 1.5K	1	
R204		VRE0034E51A	M.RESISTOR CH 1/10W 357	1	
R205		ERJ6GEYG151	M.RESISTOR CH 1/10W 150	1	
R206		ERJ6GEYJ101	M.RESISTOR CH 1/10W 100	1	
R207		ERJ6GEYG151	M.RESISTOR CH 1/10W 150	1	
R208		VRE0034E51A	M.RESISTOR CH 1/10W 357	1	
R209,10		ERJ6GEYJ332	M.RESISTOR CH 1/10W 3.3K	2	
R211,12		ERJ6GEYJ101	M.RESISTOR CH 1/10W 100	2	
R213,14		ERJ6GEYJ152	M.RESISTOR CH 1/10W 1.5K	2	
R215		VRE0034E43A	M.RESISTOR 1/10W	1	
R216		ERJ6GEYJ273	M.RESISTOR CH 1/10W 27K	1	
R217		VRE0034E82A	M.RESISTOR 1/10W	1	
R218		ERJ6GEYG471	M.RESISTOR CH 1/10W 470	1	
R219		VRE0034E89A	M.RESISTOR CH 1/10W 825	1	
R220		ERJ6GEYJ470	M.RESISTOR CH 1/10W 47	1	
R221		ERJ6GEYJ102	M.RESISTOR CH 1/10W 1K	1	
R222		ERJ6GEYJ222	M.RESISTOR CH 1/10W 2.2K	1	
R223		ERJ6GEYJ102	M.RESISTOR CH 1/10W 1K	1	
R224		VRE0034E26A	M.RESISTOR CH 1/10W 182	1	
R225		VRE0034E51A	M.RESISTOR CH 1/10W 357	1	
R231		ERJ6GEYJ332	M.RESISTOR CH 1/10W 3.3K	1	
R232		ERJ6GEYJ101	M.RESISTOR CH 1/10W 100	1	
R233		ERJ6GEYJ332	M.RESISTOR CH 1/10W 3.3K	1	
R234		ERJ6GEYG223	M.RESISTOR CH 1/10W 22K	1	
R235,36		ERJ6GEYJ221	M.RESISTOR CH 1/10W 220	2	
R237,38		ERJ6GEYJ183	M.RESISTOR CH 1/10W 18K	2	
R239,40		ERJ6GEYJ273	M.RESISTOR CH 1/10W 27K	2	
R241		ERJ6GEYJ681	M.RESISTOR CH 1/10W 680	1	
R242		VRE0034E26A	M.RESISTOR CH 1/10W 182	1	
R243		ERJ6GEYJ332	M.RESISTOR CH 1/10W 3.3K	1	
R244		ERJ6GEYK475	M.RESISTOR CH 1/10W 4.7M	1	
R245		VRE0034E26A	M.RESISTOR CH 1/10W 182	1	
R246		ERJ6GEYJ472	M.RESISTOR CH 1/10W 4.7K	1	
R247		ERJ6GEYG563	M.RESISTOR CH 1/10W 56K	1	
R248		ERJ6GEYJ153	M.RESISTOR CH 1/10W 15K	1	
R249		VRE0034E751	M.RESISTOR CH 1/10W 750	1	
R250		VRE0034E27B	M.RESISTOR CH 1/10W 1.87K	1	
R251		ERJ6GEYK5R6	M.RESISTOR CH1/10W 5.6	1	
R252		ERJ6GEYJ222	M.RESISTOR CH 1/10W 2.2K	1	
R253		ERJ6GEYJ272	M.RESISTOR CH 1/10W 2.7K	1	
R254		VRE006607103	M.RESISTOR	1	
R255,56		VRE006639680	M.RESISTOR	2	
R257		ERJ6GEYJ154	M.RESISTOR CH 1/10W 150K	1	
R258		ERJ6GEYJ184	M.RESISTOR CH 1/10W 180K	1	
R259		ERJ6GEYJ332	M.RESISTOR CH 1/10W 3.3K	1	
R260		ERJ6GEYJ680	M.RESISTOR CH 1/10W 68	1	
R261		ERJ6GEYJ470	M.RESISTOR CH 1/10W 47	1	
R262		ERJ6GEYG471	M.RESISTOR CH 1/10W 470	1	
R263		ERJ6GEYG391	M.RESISTOR CH 1/10W 390	1	
R264		ERJ6GEYG240	M.RESISTOR CH 1/10W 24	1	
R265		ERJ6GEYG471	M.RESISTOR CH 1/10W 470	1	
R266		ERJ6GEYJ470	M.RESISTOR CH 1/10W 47	1	
R267,68		ERJ6GEYJ472	M.RESISTOR CH 1/10W 4.7K	2	
R269,70		ERJ6GEYJ102	M.RESISTOR CH 1/10W 1K	2	
R271		ERJ6GEYJ222	M.RESISTOR CH 1/10W 2.2K	1	
R272		VRE0034E51A	M.RESISTOR CH 1/10W 357	1	
R273		ERJ6GEYJ472	M.RESISTOR CH 1/10W 4.7K	1	
R274		ERJ6GEYJ470	M.RESISTOR CH 1/10W 47	1	
R275		ERJ6GEYJ682	M.RESISTOR CH 1/10W 6.8K	1	
R276		ERJ6GEYJ332	M.RESISTOR CH 1/10W 3.3K	1	
R277		ERJ6GEYJ222	M.RESISTOR CH 1/10W 2.2K	1	
R279,80		ERJ6GEYJ470	M.RESISTOR CH 1/10W 47	2	
R281		ERJ6GEYJ222	M.RESISTOR CH 1/10W 2.2K	1	
R282,83		ERJ6GEYJ101	M.RESISTOR CH 1/10W 100	2	
R284		ERJ6GEYJ472	M.RESISTOR CH 1/10W 4.7K	1	
R285		ERJ6GEYJ222	M.RESISTOR CH 1/10W 2.2K	1	
R286		VRE0034E51A	M.RESISTOR CH 1/10W 357	1	
R287		ERJ6GEYJ102	M.RESISTOR CH 1/10W 1K	1	

Ref.No.		Part No.	Part Name & Description	Pcs	Remarks
R288		ERJ6GEYJ470	M.RESISTOR CH 1/10W 47	1	
R290		ERJ6GEYJ681	M.RESISTOR CH 1/10W 680	1	
R291		ERJ6GEYJ152	M.RESISTOR CH 1/10W 1.5K	1	
R292		ERJ6GEY0R00	M.RESISTOR CH 1/10W 0	1	
R293		ERJ6GEYJ222	M.RESISTOR CH 1/10W 2.2K	1	
R294		VRE0034E26A	M.RESISTOR CH 1/10W 182	1	
R301		ERJ6GEYJ470	M.RESISTOR CH 1/10W 47	1	
R302		ERJ6GEYJ681	M.RESISTOR CH 1/10W 680	1	
R303		ERJ6GEYJ102	M.RESISTOR CH 1/10W 1K	1	
R304		ERJ6GEYJ332	M.RESISTOR CH 1/10W 3.3K	1	
R305		ERJ6GEYJ470	M.RESISTOR CH 1/10W 47	1	
R306		ERJ6GEYJ681	M.RESISTOR CH 1/10W 680	1	
R307		ERJ6GEYJ102	M.RESISTOR CH 1/10W 1K	1	
R308		ERJ6GEYJ332	M.RESISTOR CH 1/10W 3.3K	1	
R309		ERJ6GEYJ222	M.RESISTOR CH 1/10W 2.2K	1	
R310		ERJ6GEYJ470	M.RESISTOR CH 1/10W 47	1	
R332		ERJ6GEYJ152	M.RESISTOR CH 1/10W 1.5K	1	
R333,34		ERJ6GEYG471	M.RESISTOR CH 1/10W 470	2	
R335,36		ERJ6GEYJ470	M.RESISTOR CH 1/10W 47	2	
R337,38		ERJ6GEYJ222	M.RESISTOR CH 1/10W 2.2K	2	
R339,40		VRE0034E43A	M.RESISTOR 1/10W	2	
R341		ERJ6GEYJ470	M.RESISTOR CH 1/10W 47	1	
R342		VRE0034E43A	M.RESISTOR 1/10W	1	
R343		VRE0034E89A	M.RESISTOR CH 1/10W 825	1	
R344		ERJ6GEYJ470	M.RESISTOR CH 1/10W 47	1	
R345		ERJ6GEYJ222	M.RESISTOR CH 1/10W 2.2K	1	
R346		ERJ6GEYJ102	M.RESISTOR CH 1/10W 1K	1	
R347		VRE0034E51A	M.RESISTOR CH 1/10W 357	1	
R348		ERJ6GEYJ153	M.RESISTOR CH 1/10W 15K	1	
R349		ERJ6GEYG223	M.RESISTOR CH 1/10W 22K	1	
R350,51		ERJ6GEYJ220	M.RESISTOR CH 1/10W 22	2	
R352		ERJ6GEYJ470	M.RESISTOR CH 1/10W 47	1	
R353		ERJ6GEYJ152	M.RESISTOR CH 1/10W 1.5K	1	
R354		ERJ6GEYG471	M.RESISTOR CH 1/10W 470	1	
R355		ERJ6GEYJ102	M.RESISTOR CH 1/10W 1K	1	
R356		ERJ6GEYJ221	M.RESISTOR CH 1/10W 220	1	
R357		ERJ6GEYJ222	M.RESISTOR CH 1/10W 2.2K	1	
R358		ERJ6GEYJ101	M.RESISTOR CH 1/10W 100	1	
R359		ERJ6GEYJ472	M.RESISTOR CH 1/10W 4.7K	1	
R360,61		ERJ6GEYJ473	M.RESISTOR CH 1/10W 47K	2	
R362		ERJ6GEYJ472	M.RESISTOR CH 1/10W 4.7K	1	
R363,64		ERJ6GEYG223	M.RESISTOR CH 1/10W 22K	2	
R365		ERJ6GEYJ473	M.RESISTOR CH 1/10W 47K	1	
R366		ERJ6GEYG223	M.RESISTOR CH 1/10W 22K	1	
R367		ERJ6GEYJ683	M.RESISTOR CH 1/10W 68K	1	
R368		ERJ6GEYJ472	M.RESISTOR CH 1/10W 4.7K	1	
R369		ERJ6GEYJ103	M.RESISTOR CH 1/10W 10K	1	
R370		ERJ6GEYJ683	M.RESISTOR CH 1/10W 68K	1	
R371		ERJ6GEYJ682	M.RESISTOR CH 1/10W 6.8K	1	
R394		ERJ6GEYG471	M.RESISTOR CH 1/10W 470	1	
R395		ERJ6GEYJ101	M.RESISTOR CH 1/10W 100	1	
R396		ERJ6GEYJ222	M.RESISTOR CH 1/10W 2.2K	1	
R397		ERJ6GEYJ470	M.RESISTOR CH 1/10W 47	1	
R398		ERJ6GEYJ152	M.RESISTOR CH 1/10W 1.5K	1	
R399,00		ERJ6GEYG301	M.RESISTOR CH 1/10W 300	2	
R401		ERJ6GEYJ470	M.RESISTOR CH 1/10W 47	1	
R402		ERJ6GEYJ102	M.RESISTOR CH 1/10W 1K	1	
R403		ERJ6GEYJ681	M.RESISTOR CH 1/10W 680	1	
R404		ERJ6GEYJ102	M.RESISTOR CH 1/10W 1K	1	
R405		ERJ6GEYJ152	M.RESISTOR CH 1/10W 1.5K	1	
R406		ERJ6GEYJ470	M.RESISTOR CH 1/10W 47	1	
R407		ERJ6GEYJ221	M.RESISTOR CH 1/10W 220	1	
R408		ERJ6GEYJ222	M.RESISTOR CH 1/10W 2.2K	1	
R409		ERJ6GEYJ470	M.RESISTOR CH 1/10W 47	1	
R410		ERJ6GEYJ152	M.RESISTOR CH 1/10W 1.5K	1	
R411		ERJ6GEYJ331	M.RESISTOR CH 1/10W 330	1	
R412		VRE0034E51A	M.RESISTOR CH 1/10W 357	1	
R413		ERJ6GEYJ470	M.RESISTOR CH 1/10W 47	1	
R414		ERJ6GEYJ222	M.RESISTOR CH 1/10W 2.2K	1	
R415		ERJ6GEYJ470	M.RESISTOR CH 1/10W 47	1	
R426		ERJ6GEYJ470	M.RESISTOR CH 1/10W 47	1	
R427-34		ERJ6GEYJ102	M.RESISTOR CH 1/10W 1K	8	
R435,36		ERJ6GEYJ332	M.RESISTOR CH 1/10W 3.3K	2	
R437		ERJ6GEYJ101	M.RESISTOR CH 1/10W 100	1	
R438,39		ERJ6GEYG471	M.RESISTOR CH 1/10W 470	2	

Ref.No.		Part No.	Part Name & Description	Pcs	Remarks
R440		ERJ6GEYJ470	M.RESISTOR CH 1/10W 47	1	
R441,42		ERJ6GEYJ681	M.RESISTOR CH 1/10W 680	2	
R443,44		ERJ6GEYJ101	M.RESISTOR CH 1/10W 100	2	
R445		ERJ6GEYJ470	M.RESISTOR CH 1/10W 47	1	
R446		ERJ6GEYG151	M.RESISTOR CH 1/10W 150	1	
R447,48		ERJ6GEYJ222	M.RESISTOR CH 1/10W 2.2K	2	
R449		ERJ6GEYJ470	M.RESISTOR CH 1/10W 47	1	
R450,51		ERJ6GEYJ222	M.RESISTOR CH 1/10W 2.2K	2	
R452,53		ERJ6GEYJ470	M.RESISTOR CH 1/10W 47	2	
R454-65		ERJ6GEYJ102	M.RESISTOR CH 1/10W 1K	12	
R466		ERJ6GEYJ683	M.RESISTOR CH 1/10W 68K	1	
R467,68		ERJ6GEYJ103	M.RESISTOR CH 1/10W 10K	2	
R469,70		ERJ6GEYJ680	M.RESISTOR CH 1/10W 68	2	
R471,72		ERJ6GEYJ332	M.RESISTOR CH 1/10W 3.3K	2	
R473		ERJ6GEYJ101	M.RESISTOR CH 1/10W 100	1	
R474		ERDS2TJ222	C.RESISTOR 1/4W 2.2K	1	
R475		ERJ6GEYJ102	M.RESISTOR CH 1/10W 1K	1	
R477		ERJ6GEYG471	M.RESISTOR CH 1/10W 470	1	
R478		ERJ6GEYJ102	M.RESISTOR CH 1/10W 1K	1	
R479		ERJ6GEYJ222	M.RESISTOR CH 1/10W 2.2K	1	
R480,81		ERJ6GEYG471	M.RESISTOR CH 1/10W 470	2	
R482		ERJ6GEYJ470	M.RESISTOR CH 1/10W 47	1	
R483,84		ERJ6GEYJ333	M.RESISTOR CH 1/10W 33K	2	
R485,86		ERJ6GEYJ102	M.RESISTOR CH 1/10W 1K	2	
R487		ERJ6GEYJ222	M.RESISTOR CH 1/10W 2.2K	1	
R488		ERJ6GEYJ221	M.RESISTOR CH 1/10W 220	1	
R489		ERJ6GEYJ392	M.RESISTOR CH 1/10W 3.9K	1	
R490		ERJ6GEYJ470	M.RESISTOR CH 1/10W 47	1	
R491		ERJ6GEYG223	M.RESISTOR CH 1/10W 22K	1	
R492		ERJ6GEYG471	M.RESISTOR CH 1/10W 470	1	
R493		ERJ6GEYJ152	M.RESISTOR CH 1/10W 1.5K	1	
R494,95		ERJ6GEYJ101	M.RESISTOR CH 1/10W 100	2	
R496		ERJ6GEYJ222	M.RESISTOR CH 1/10W 2.2K	1	
R497		ERJ6GEYJ102	M.RESISTOR CH 1/10W 1K	1	
R498		ERJ6GEYJ101	M.RESISTOR CH 1/10W 100	1	
R499		ERJ6GEYJ332	M.RESISTOR CH 1/10W 3.3K	1	
R500		ERJ6GEYG223	M.RESISTOR CH 1/10W 22K	1	
R501		ERJ6GEYJ332	M.RESISTOR CH 1/10W 3.3K	1	
R502		ERJ6GEYJ472	M.RESISTOR CH 1/10W 4.7K	1	
R503		ERJ6GEYJ103	M.RESISTOR CH 1/10W 10K	1	
R504		ERJ6GEYJ184	M.RESISTOR CH 1/10W 180K	1	
R505,06		ERJ6GEYJ473	M.RESISTOR CH 1/10W 47K	2	
R508		ERJ6GEYG471	M.RESISTOR CH 1/10W 470	1	
R509		ERJ6GEYJ221	M.RESISTOR CH 1/10W 220	1	
R510		ERJ6GEYJ392	M.RESISTOR CH 1/10W 3.9K	1	
R511		VRE0034E27B	M.RESISTOR CH 1/10W 1.87K	1	
R512		VRE0034E751	M.RESISTOR CH 1/10W 750	1	
R513		ERJ6GEYJ332	M.RESISTOR CH 1/10W 3.3K	1	
R514		ERJ6GEYJ102	M.RESISTOR CH 1/10W 1K	1	
R515		ERJ6GEYJ682	M.RESISTOR CH 1/10W 6.8K	1	
R516		ERJ6GEYG301	M.RESISTOR CH 1/10W 300	1	
R518		ERJ6GEYG431	M.RESISTOR CH 1/10W 430	1	
R519		ERJ6GEYJ332	M.RESISTOR CH 1/10W 3.3K	1	
R520		ERJ6GEYJ101	M.RESISTOR CH 1/10W 100	1	
R521		ERJ6GEYG151	M.RESISTOR CH 1/10W 150	1	
R522		VRE0034E26A	M.RESISTOR CH 1/10W 182	1	
R523		VRE0034E51A	M.RESISTOR CH 1/10W 357	1	
R524		VRE0034E89A	M.RESISTOR CH 1/10W 825	1	
R525		ERJ6GEYJ331	M.RESISTOR CH 1/10W 330	1	
R526,27		ERJ6GEYJ470	M.RESISTOR CH 1/10W 47	2	
R528		ERJ6GEYJ101	M.RESISTOR CH 1/10W 100	1	
R529		ERJ6GEYJ102	M.RESISTOR CH 1/10W 1K	1	
R530		ERJ6GEYJ681	M.RESISTOR CH 1/10W 680	1	
R531,32		ERJ6GEYJ273	M.RESISTOR CH 1/10W 27K	2	
R533,34		ERJ6GEYJ183	M.RESISTOR CH 1/10W 18K	2	
R535,36		ERJ6GEYJ221	M.RESISTOR CH 1/10W 220	2	
R537		ERJ6GEYG223	M.RESISTOR CH 1/10W 22K	1	
R538		ERJ6GEYJ470	M.RESISTOR CH 1/10W 47	1	
R539		ERJ6GEYG301	M.RESISTOR CH 1/10W 300	1	
R540		VRE0034E24A	M.RESISTOR 1/10W	1	
R541		VRE0034E89A	M.RESISTOR CH 1/10W 825	1	
R542		VRE0034E51A	M.RESISTOR CH 1/10W 357	1	
R543		VRE0034E89A	M.RESISTOR CH 1/10W 825	1	
R544		ERJ6GEYJ392	M.RESISTOR CH 1/10W 3.9K	1	
R545		ERJ6GEYJ222	M.RESISTOR CH 1/10W 2.2K	1	

Ref.No.		Part No.	Part Name & Description	Pcs	Remarks
R546		ERJ6GEYJ470	M.RESISTOR CH 1/10W 47	1	
R561-63		ERJ6GEYJ473	M.RESISTOR CH 1/10W 47K	3	
R564		ERJ6GEYJ222	M.RESISTOR CH 1/10W 2.2K	1	
R565		ERJ6GEYG223	M.RESISTOR CH 1/10W 22K	1	
R566		ERJ6GEYJ222	M.RESISTOR CH 1/10W 2.2K	1	
R567		ERJ6GEYG223	M.RESISTOR CH 1/10W 22K	1	
R620		ERJ6GEYJ101	M.RESISTOR CH 1/10W 100	1	
R624-26		ERJ6GEYJ103	M.RESISTOR CH 1/10W 10K	3	
R627		ERJ6GEYJ472	M.RESISTOR CH 1/10W 4.7K	1	
R628		ERJ6GEYG223	M.RESISTOR CH 1/10W 22K	1	
R629		ERJ6GEYJ472	M.RESISTOR CH 1/10W 4.7K	1	
R630,31		ERJ6GEYJ101	M.RESISTOR CH 1/10W 100	2	
R636		ERJ6GEYJ470	M.RESISTOR CH 1/10W 47	1	
R637		ERJ6GEYJ102	M.RESISTOR CH 1/10W 1K	1	
R639,40		ERJ6GEYJ331	M.RESISTOR CH 1/10W 330	2	
R644,45		ERJ6GEYJ470	M.RESISTOR CH 1/10W 47	2	
R646		ERJ6GEYJ682	M.RESISTOR CH 1/10W 6.8K	1	
R647,48		ERJ6GEYJ221	M.RESISTOR CH 1/10W 220	2	
R649		ERJ6GEYJ682	M.RESISTOR CH 1/10W 6.8K	1	
R650-53		ERJ6GEYJ101	M.RESISTOR CH 1/10W 100	4	
R656		ERJ6GEYJ470	M.RESISTOR CH 1/10W 47	1	
R660		VRE0034E51A	M.RESISTOR CH 1/10W 357	1	
R663		ERJ6GEYJ153	M.RESISTOR CH 1/10W 15K	1	
R664		ERJ6GEYK5R6	M.RESISTOR CH1/10W 5.6	1	
R665		ERJ6GEYJ100	M.RESISTOR CH 1/10W 10	1	
R668		ERJ6GEYJ472	M.RESISTOR CH 1/10W 4.7K	1	
R669		ERJ6GEYJ102	M.RESISTOR CH 1/10W 1K	1	
R670		ERJ6GEYJ681	M.RESISTOR CH 1/10W 680	1	
R671		ERJ6GEYJ472	M.RESISTOR CH 1/10W 4.7K	1	
R672		ERJ6GEYJ103	M.RESISTOR CH 1/10W 10K	1	
R673		ERJ6GEYJ470	M.RESISTOR CH 1/10W 47	1	
R674		ERJ6GEYJ222	M.RESISTOR CH 1/10W 2.2K	1	
R675,76		ERJ6GEYJ472	M.RESISTOR CH 1/10W 4.7K	2	
R677		ERJ6GEYJ681	M.RESISTOR CH 1/10W 680	1	
R678		ERJ6GEYJ472	M.RESISTOR CH 1/10W 4.7K	1	
R679		ERJ6GEYJ103	M.RESISTOR CH 1/10W 10K	1	
R680		ERJ6GEYJ470	M.RESISTOR CH 1/10W 47	1	
R681		ERJ6GEYJ104	M.RESISTOR CH 1/10W 100K	1	
R682		ERJ6GEYJ333	M.RESISTOR CH 1/10W 33K	1	
R701		ERJ6GEYJ470	M.RESISTOR CH 1/10W 47	1	
R702		ERJ6GEYJ102	M.RESISTOR CH 1/10W 1K	1	
R703		VRE0034E89A	M.RESISTOR CH 1/10W 825	1	
R704		VRE0034E51A	M.RESISTOR CH 1/10W 357	1	
R705		ERJ6GEYJ332	M.RESISTOR CH 1/10W 3.3K	1	
R712		ERJ6GEYJ470	M.RESISTOR CH 1/10W 47	1	
R723,24		ERJ6GEYJ101	M.RESISTOR CH 1/10W 100	2	
R725		ERJ6GEYJ102	M.RESISTOR CH 1/10W 1K	1	
R726		ERJ6GEYJ470	M.RESISTOR CH 1/10W 47	1	
R727		ERJ6GEYG471	M.RESISTOR CH 1/10W 470	1	
R728,29		ERJ6GEYJ470	M.RESISTOR CH 1/10W 47	2	
R730		ERJ6GEYG471	M.RESISTOR CH 1/10W 470	1	
R731		ERJ6GEYJ222	M.RESISTOR CH 1/10W 2.2K	1	
R732,33		ERJ6GEYG681	M.RESISTOR CH 1/10W 680	2	
R734		ERJ6GEYJ222	M.RESISTOR CH 1/10W 2.2K	1	
R735		ERJ6GEYJ470	M.RESISTOR CH 1/10W 47	1	
R736		VRE0034E43A	M.RESISTOR 1/10W	1	
R737		ERJ6GEYJ332	M.RESISTOR CH 1/10W 3.3K	1	
R738		VRE0034E89A	M.RESISTOR CH 1/10W 825	1	
R739		ERJ6GEYJ470	M.RESISTOR CH 1/10W 47	1	
R740		ERJ6GEYJ222	M.RESISTOR CH 1/10W 2.2K	1	
R741		ERJ6GEYJ182	M.RESISTOR CH 1/10W 1.8K	1	
R742		VRE0034E51A	M.RESISTOR CH 1/10W 357	1	
R743		ERJ6GEYJ153	M.RESISTOR CH 1/10W 15K	1	
R744		ERJ6GEYJ473	M.RESISTOR CH 1/10W 47K	1	
R745,46		ERJ6GEYJ220	M.RESISTOR CH 1/10W 22	2	
R747		ERJ6GEYJ470	M.RESISTOR CH 1/10W 47	1	
R748		ERJ6GEYJ152	M.RESISTOR CH 1/10W 1.5K	1	
R749		VRE0034E51A	M.RESISTOR CH 1/10W 357	1	
R750		ERJ6GEYJ102	M.RESISTOR CH 1/10W 1K	1	
R751		ERJ6GEYJ271	M.RESISTOR CH 1/10W 270	1	
R752		ERJ6GEYJ222	M.RESISTOR CH 1/10W 2.2K	1	
R753		ERJ6GEYJ472	M.RESISTOR CH 1/10W 4.7K	1	
R754		ERJ6GEYJ103	M.RESISTOR CH 1/10W 10K	1	
R755		ERJ6GEYJ472	M.RESISTOR CH 1/10W 4.7K	1	
R756		ERJ6GEYJ682	M.RESISTOR CH 1/10W 6.8K	1	

Ref.No.		Part No.	Part Name & Description	Pcs	Remarks
R758		ERJ6GEYJ101	M.RESISTOR CH 1/10W 100	1	
R759		ERJ6GEYJ222	M.RESISTOR CH 1/10W 2.2K	1	
R760		ERJ6GEYJ470	M.RESISTOR CH 1/10W 47	1	
R761		ERJ6GEYJ152	M.RESISTOR CH 1/10W 1.5K	1	
R762,63		ERJ6GEYG391	M.RESISTOR CH 1/10W 390	2	
R764		ERJ6GEYJ470	M.RESISTOR CH 1/10W 47	1	
R765		ERJ6GEYJ102	M.RESISTOR CH 1/10W 1K	1	
R766		ERJ6GEYJ681	M.RESISTOR CH 1/10W 680	1	
R767		ERJ6GEYJ102	M.RESISTOR CH 1/10W 1K	1	
R768		ERJ6GEYJ152	M.RESISTOR CH 1/10W 1.5K	1	
R769		ERJ6GEYJ470	M.RESISTOR CH 1/10W 47	1	
R770		ERJ6GEYJ221	M.RESISTOR CH 1/10W 220	1	
R771		ERJ6GEYJ222	M.RESISTOR CH 1/10W 2.2K	1	
R772		ERJ6GEYJ470	M.RESISTOR CH 1/10W 47	1	
R773		ERJ6GEYJ152	M.RESISTOR CH 1/10W 1.5K	1	
R774		ERJ6GEYJ331	M.RESISTOR CH 1/10W 330	1	
R775		VRE0034E51A	M.RESISTOR CH 1/10W 357	1	
R776		ERJ6GEYJ470	M.RESISTOR CH 1/10W 47	1	
R777		ERJ6GEYJ222	M.RESISTOR CH 1/10W 2.2K	1	
R778		ERJ6GEYJ470	M.RESISTOR CH 1/10W 47	1	
R789		ERJ6GEYJ470	M.RESISTOR CH 1/10W 47	1	
R790-97		ERJ6GEYJ102	M.RESISTOR CH 1/10W 1K	8	
R798,99		ERJ6GEYJ332	M.RESISTOR CH 1/10W 3.3K	2	
R800		ERJ6GEYJ101	M.RESISTOR CH 1/10W 100	1	
R801,02		ERJ6GEYG471	M.RESISTOR CH 1/10W 470	2	
R803		ERJ6GEYJ470	M.RESISTOR CH 1/10W 47	1	
R804,05		ERJ6GEYJ681	M.RESISTOR CH 1/10W 680	2	
R806,07		ERJ6GEYJ101	M.RESISTOR CH 1/10W 100	2	
R808		ERJ6GEYJ470	M.RESISTOR CH 1/10W 47	1	
R809		ERJ6GEYG151	M.RESISTOR CH 1/10W 150	1	
R810,11		ERJ6GEYJ222	M.RESISTOR CH 1/10W 2.2K	2	
R812		ERJ6GEYJ470	M.RESISTOR CH 1/10W 47	1	
R813,14		ERJ6GEYJ222	M.RESISTOR CH 1/10W 2.2K	2	
R815,16		ERJ6GEYJ470	M.RESISTOR CH 1/10W 47	2	
R817-28		ERJ6GEYJ102	M.RESISTOR CH 1/10W 1K	12	
R829		ERJ6GEYJ683	M.RESISTOR CH 1/10W 68K	1	
R830,31		ERJ6GEYJ103	M.RESISTOR CH 1/10W 10K	2	
R832,33		ERJ6GEYJ150	M.RESISTOR CH 1/10W 15	2	
R834,35		ERJ6GEYJ332	M.RESISTOR CH 1/10W 3.3K	2	
R836		ERJ6GEYJ101	M.RESISTOR CH 1/10W 100	1	
R837		ERDS2TJ222	C.RESISTOR 1/4W 2.2K	1	
R838-40		ERJ6GEYJ102	M.RESISTOR CH 1/10W 1K	3	
R842		ERJ6GEYJ222	M.RESISTOR CH 1/10W 2.2K	1	
R843,44		ERJ6GEYG471	M.RESISTOR CH 1/10W 470	2	
R845		ERJ6GEYJ470	M.RESISTOR CH 1/10W 47	1	
R846,47		ERJ6GEYJ333	M.RESISTOR CH 1/10W 33K	2	
R848,49		ERJ6GEYJ102	M.RESISTOR CH 1/10W 1K	2	
R850		ERJ6GEYJ222	M.RESISTOR CH 1/10W 2.2K	1	
R851		ERJ6GEYJ221	M.RESISTOR CH 1/10W 220	1	
R852		ERJ6GEYJ392	M.RESISTOR CH 1/10W 3.9K	1	
R853		ERJ6GEYJ470	M.RESISTOR CH 1/10W 47	1	
R854		ERJ6GEYG471	M.RESISTOR CH 1/10W 470	1	
R855		ERJ6GEYJ152	M.RESISTOR CH 1/10W 1.5K	1	
R856,57		ERJ6GEYJ101	M.RESISTOR CH 1/10W 100	2	
R858		ERJ6GEYJ222	M.RESISTOR CH 1/10W 2.2K	1	
R859		ERJ6GEYJ102	M.RESISTOR CH 1/10W 1K	1	
R860		ERJ6GEYJ101	M.RESISTOR CH 1/10W 100	1	
R861		ERJ6GEYJ332	M.RESISTOR CH 1/10W 3.3K	1	
R862		ERJ6GEYG223	M.RESISTOR CH 1/10W 22K	1	
R863		ERJ6GEYJ332	M.RESISTOR CH 1/10W 3.3K	1	
R864		ERJ6GEYJ472	M.RESISTOR CH 1/10W 4.7K	1	
R865		ERJ6GEYJ103	M.RESISTOR CH 1/10W 10K	1	
R866		ERJ6GEYJ184	M.RESISTOR CH 1/10W 180K	1	
R867		ERJ6GEYJ473	M.RESISTOR CH 1/10W 47K	1	
R868		ERJ6GEYG471	M.RESISTOR CH 1/10W 470	1	
R870		ERJ6GEYG471	M.RESISTOR CH 1/10W 470	1	
R871		ERJ6GEYJ221	M.RESISTOR CH 1/10W 220	1	
R872		ERJ6GEYJ392	M.RESISTOR CH 1/10W 3.9K	1	
R873		VRE0034E27B	M.RESISTOR CH 1/10W 1.87K	1	
R874		VRE0034E751	M.RESISTOR CH 1/10W 750	1	
R875		ERJ6GEYJ332	M.RESISTOR CH 1/10W 3.3K	1	
R876		ERJ6GEYJ102	M.RESISTOR CH 1/10W 1K	1	
R878		ERJ6GEYG301	M.RESISTOR CH 1/10W 300	1	
R879		ERJ6GEYG431	M.RESISTOR CH 1/10W 430	1	
R880		ERJ6GEYJ332	M.RESISTOR CH 1/10W 3.3K	1	

Ref.No.		Part No.	Part Name & Description	Pcs	Remarks
R881		ERJ6GEYJ101	M.RESISTOR CH 1/10W 100	1	
R882		ERJ6GEYG151	M.RESISTOR CH 1/10W 150	1	
R883		VRE0034E26A	M.RESISTOR CH 1/10W 182	1	
R884		ERJ6GEYJ391	M.RESISTOR CH 1/10W 390	1	
R885		VRE0034E89A	M.RESISTOR CH 1/10W 825	1	
R886,87		ERJ6GEYJ470	M.RESISTOR CH 1/10W 47	2	
R888		VRE0034E51A	M.RESISTOR CH 1/10W 357	1	
R889		ERJ6GEYJ681	M.RESISTOR CH 1/10W 680	1	
R890		ERJ6GEYJ273	M.RESISTOR CH 1/10W 27K	1	
R891		ERJ6GEYJ183	M.RESISTOR CH 1/10W 18K	1	
R892		ERJ6GEYJ221	M.RESISTOR CH 1/10W 220	1	
R893		ERJ6GEYJ273	M.RESISTOR CH 1/10W 27K	1	
R894		ERJ6GEYJ183	M.RESISTOR CH 1/10W 18K	1	
R895		ERJ6GEYJ221	M.RESISTOR CH 1/10W 220	1	
R896		ERJ6GEYG223	M.RESISTOR CH 1/10W 22K	1	
R897		ERJ6GEYJ470	M.RESISTOR CH 1/10W 47	1	
R898		VRE0034E24A	M.RESISTOR 1/10W	1	
R899		VRE0034E89A	M.RESISTOR CH 1/10W 825	1	
R900		ERJ6GEYG301	M.RESISTOR CH 1/10W 300	1	
R901		VRE0034E51A	M.RESISTOR CH 1/10W 357	1	
R902		VRE0034E89A	M.RESISTOR CH 1/10W 825	1	
R903		ERJ6GEYJ392	M.RESISTOR CH 1/10W 3.9K	1	
R904		ERJ6GEYJ470	M.RESISTOR CH 1/10W 47	1	
R905		ERJ6GEYJ222	M.RESISTOR CH 1/10W 2.2K	1	
R964		ERJ6GEYJ101	M.RESISTOR CH 1/10W 100	1	
R965		ERJ6GEYJ102	M.RESISTOR CH 1/10W 1K	1	
R966-68		ERJ6GEYJ103	M.RESISTOR CH 1/10W 10K	3	
R969,70		ERJ6GEYJ472	M.RESISTOR CH 1/10W 4.7K	2	
R971		ERJ6GEYG223	M.RESISTOR CH 1/10W 22K	1	
R975,76		ERJ6GEYJ470	M.RESISTOR CH 1/10W 47	2	
R977		ERJ6GEYJ682	M.RESISTOR CH 1/10W 6.8K	1	
R978,79		ERJ6GEYJ221	M.RESISTOR CH 1/10W 220	2	
R980		ERJ6GEYJ682	M.RESISTOR CH 1/10W 6.8K	1	
R981,82		ERJ6GEYJ101	M.RESISTOR CH 1/10W 100	2	
R985		ERJ6GEYJ470	M.RESISTOR CH 1/10W 47	1	
R986,87		VRE0034E51A	M.RESISTOR CH 1/10W 357	2	
R989		ERJ6GEYJ472	M.RESISTOR CH 1/10W 4.7K	1	
R993		VRE0034E51A	M.RESISTOR CH 1/10W 357	1	
R996		ERJ6GEYJ220	M.RESISTOR CH 1/10W 22	1	
R998,99		ERJ6GEYG151	M.RESISTOR CH 1/10W 150	2	
R1000		VRE0034E51A	M.RESISTOR CH 1/10W 357	1	
R1001		ERJ6GEYJ102	M.RESISTOR CH 1/10W 1K	1	
R1002		ERJ6GEYJ472	M.RESISTOR CH 1/10W 4.7K	1	
R1003		ERJ6GEYJ681	M.RESISTOR CH 1/10W 680	1	
R1004		ERJ6GEYJ472	M.RESISTOR CH 1/10W 4.7K	1	
R1005		ERJ6GEYJ103	M.RESISTOR CH 1/10W 10K	1	
R1006		ERJ6GEYJ470	M.RESISTOR CH 1/10W 47	1	
R1007		ERJ6GEYJ222	M.RESISTOR CH 1/10W 2.2K	1	
R1008,09		ERJ6GEYJ472	M.RESISTOR CH 1/10W 4.7K	2	
SW1		VSS0126	SWITCH	1	
SW201,02		VSS0126	SWITCH	2	
SW304		VSS0126	SWITCH	1	
SW704		VSS0126	SWITCH	1	
TP3-P8		VJR0646	TEST POINT	6	
TP201-07		VJR0646	TEST POINT	7	
TP301,02		VJR0646	TEST POINT	2	
TP307-11		VJR0646	TEST POINT	5	
TP315,16		VJR0646	TEST POINT	2	
TP701-08		VJR0646	TEST POINT	8	
TP711		VJR0646	TEST POINT	1	
TPG1,G2		VJR0646	TEST POINT	2	
TPG201,02		VJR0646	TEST POINT	2	
TPG301-03		VJR0646	TEST POINT	3	
TPG701-03		VJR0646	TEST POINT	3	
VC301		ECV1ZW10X53T	TRIMMER 10P	1	
VC701		ECV1ZW20X53T	V.CAPACITOR 20P	1	

Ref.No.		Part No.	Part Name & Description	Pcs	Remarks
VL201		EIR7QF015B	COIL	1	
VL301,02		EIR7QF016B	COIL	2	
VL701		EIR7QF016B	COIL	1	
VL702		EIR7QF015B	COIL	1	
VR1		VRV0064B501	V.RESISTOR 500	1	
VR3		VRV0109B202	V.RESISTOR 2K	1	
VR4		VRV0109B102	V.RESISTOR 1K	1	
VR5		VRV0109B203	V.RESISTOR 20K	1	
VR6		VRV0109B501	V.RESISTOR 500	1	
VR7		VRV0064B103	V.RESISTOR 10K	1	
VR8		VRV0109B503	V.RESISTOR 50K	1	
VR9		VRV0109B502	V.RESISTOR 5K	1	
VR10		VRV0109B503	V.RESISTOR 50K	1	
VR11		VRV0109B104	V.RESISTOR 100K	1	
VR201		VRV0064B501	V.RESISTOR 500	1	
VR202		VRV0109B203	V.RESISTOR 20K	1	
VR203		VRV0109B102	V.RESISTOR 1K	1	
VR204		VRV0109B501	V.RESISTOR 500	1	
VR205		VRV0109B503	V.RESISTOR 50K	1	
VR206		VRV0109B502	V.RESISTOR 5K	1	
VR207,08		VRV0109B503	V.RESISTOR 50K	2	
VR209		VRV0109B104	V.RESISTOR 100K	1	
VR301		VRV0109B501	V.RESISTOR 500	1	
VR302		VRV0109B102	V.RESISTOR 1K	1	
VR303		VRV0109B501	V.RESISTOR 500	1	
VR304		VRV0109B102	V.RESISTOR 1K	1	
VR309		VRV0109B101	V.RESISTOR 100	1	
VR310		VRV0109B502	V.RESISTOR 5K	1	
VR311		VRV0109B501	V.RESISTOR 500	1	
VR312		VRV0064B104	V.RESISTOR 100K	1	
VR315,16		VRV0064B502	V.RESISTOR 5K	2	
VR317		VRV0109B501	V.RESISTOR 500	1	
VR318		VRV0109B203	V.RESISTOR 20K	1	
VR319,20		VRV0109B102	V.RESISTOR 1K	2	
VR321		VRV0109B203	V.RESISTOR 20K	1	
VR322		VRV0109B102	V.RESISTOR 1K	1	
VR323		VRV0109B203	V.RESISTOR 20K	1	
VR324		VRV0109B102	V.RESISTOR 1K	1	
VR325		VRV0109B202	V.RESISTOR 2K	1	
VR701,02		VRV0109B501	V.RESISTOR 500	2	
VR712,13		VRV0064B502	V.RESISTOR 5K	2	
VR714		VRV0109B501	V.RESISTOR 500	1	
VR715		VRV0109B203	V.RESISTOR 20K	1	
VR716,17		VRV0109B102	V.RESISTOR 1K	2	
VR718		VRV0109B203	V.RESISTOR 20K	1	
VR719		VRV0109B102	V.RESISTOR 1K	1	
VR720		VRV0109B203	V.RESISTOR 20K	1	
VR721		VRV0109B102	V.RESISTOR 1K	1	
VR722		VRV0109B202	V.RESISTOR 2K	1	
VR727		VRV0109B101	V.RESISTOR 100	1	
			MISCELLANEOUS		
		VML2143	CARD PULLER	1	
		VML2144	CARD PULLER	1	
		VMZ1547	BARRIER	1	
		VXA3966	P.C.B. SHIELD PLATE	1	
		XYNV3+K6FR	SCREW	5	

Ref.No.		Part No.	Part Name & Description	Pcs	Remarks
	■	VEP83098F	P.C.BOARD W/COMPONENT		FOR AU-63H
			W3 MOD & DEMOD		
			CAPACITORS		
C62		ECUM1E104ZFN	C.CAPACITOR CH 25V 0.1U	1	
C63		ECEA1CU101	E.CAPACITOR 16V 100U	1	
C64		ECUM1E104ZFN	C.CAPACITOR CH 25V 0.1U	1	
C65		ECSF1CE106	E.CAPACITOR 16V 10U	1	
C66		ECUM1E104ZFN	C.CAPACITOR CH 25V 0.1U	1	
C67		ECSF1CE106	E.CAPACITOR 16V 10U	1	
C68		ECUM1E104ZFN	C.CAPACITOR CH 25V 0.1U	1	
C69,70		ECSF1CE106	E.CAPACITOR 16V 10U	2	
C71		ECUM1E104ZFN	C.CAPACITOR CH 25V 0.1U	1	
C72		ECEA1CU101	E.CAPACITOR 16V 100U	1	
C301,02		ECUM1H103KBN	C.CAPACITOR CH 50V 0.01U	2	
C303		ECUM1H220JCN	C.CAPACITOR CH 50V 22P	1	
C304,05		ECUM1H103KBN	C.CAPACITOR CH 50V 0.01U	2	
C306		ECUM1H220JCN	C.CAPACITOR CH 50V 22P	1	
C307		ECEA1AU101	E.CAPACITOR 10V 100U	1	
C308,09		ECUM1H103KBN	C.CAPACITOR CH 50V 0.01U	2	
C310		ECEA1AU101	E.CAPACITOR 10V 100U	1	
C311		ECUM1H103KBN	C.CAPACITOR CH 50V 0.01U	1	
C316		ECUM1E104ZFN	C.CAPACITOR CH 25V 0.1U	1	
C322		ECUM1E104ZFN	C.CAPACITOR CH 25V 0.1U	1	
C325		ECUM1E104ZFN	C.CAPACITOR CH 25V 0.1U	1	
C342		ECUM1H103KBN	C.CAPACITOR CH 50V 0.01U	1	
C343		ECUM1H150JCN	C.CAPACITOR CH 50V 15P	1	
C344		ECUM1H101JCN	C.CAPACITOR CH 50V 100P	1	
C345		ECUM1H100DCN	C.CAPACITOR CH 50V 10P	1	
C346		ECUM1H103KBN	C.CAPACITOR CH 50V 0.01U	1	
C347,48		ECEA1AU101	E.CAPACITOR 10V 100U	2	
C349		ECUM1H103KBN	C.CAPACITOR CH 50V 0.01U	1	
C350		ECUM1H820JCN	C.CAPACITOR CH 50V 82P	1	
C351,52		ECUM1H103KBN	C.CAPACITOR CH 50V 0.01U	2	
C353		ECUM1H680JCN	C.CAPACITOR CH 50V 68P	1	
C354,55		ECUM1H103KBN	C.CAPACITOR CH 50V 0.01U	2	
C356		ECUM1E104ZFN	C.CAPACITOR CH 25V 0.1U	1	
C357		ECEA1HU2R2	E.CAPACITOR 50V 2.2U	1	
C358		ECEA1AU101	E.CAPACITOR 10V 100U	1	
C359		ECUM1H103KBN	C.CAPACITOR CH 50V 0.01U	1	
C360		ECUM1H270JCN	C.CAPACITOR CH 50V 27P	1	
C363		ECUM1E104ZFN	C.CAPACITOR CH 25V 0.1U	1	
C373		ECEA1AU101	E.CAPACITOR 10V 100U	1	
C374		ECUM1H103KBN	C.CAPACITOR CH 50V 0.01U	1	
C375		ECEA1AU101	E.CAPACITOR 10V 100U	1	
C376-78		ECUM1H103KBN	C.CAPACITOR CH 50V 0.01U	3	
C380		ECUM1E104ZFN	C.CAPACITOR CH 25V 0.1U	1	
C381		ECUM1H103KBN	C.CAPACITOR CH 50V 0.01U	1	
C382		ECUM1E104ZFN	C.CAPACITOR CH 25V 0.1U	1	
C383		ECEA1AU101	E.CAPACITOR 10V 100U	1	
C386		ECUM1H050DCN	C.CAPACITOR CH 50V 50P	1	
C387		ECUM1H100DCN	C.CAPACITOR CH 50V 10P	1	
C389		ECUM1H331JCN	C.CAPACITOR CH 50V 330P	1	
C391		ECUM1H470JCN	C.CAPACITOR CH 50V 47P	1	
C392		ECUM1H103KBN	C.CAPACITOR CH 50V 0.01U	1	
C393		ECEA1AU101	E.CAPACITOR 10V 100U	1	
C394		ECUM1H103KBN	C.CAPACITOR CH 50V 0.01U	1	
C395		ECUM1E104ZFN	C.CAPACITOR CH 25V 0.1U	1	
C396,97		ECUM1H103KBN	C.CAPACITOR CH 50V 0.01U	2	
C398		ECUM1H180JCN	C.CAPACITOR CH 50V 18P	1	
C399		ECUM1H103KBN	C.CAPACITOR CH 50V 0.01U	1	
C400		ECUM1E104ZFN	C.CAPACITOR CH 25V 0.1U	1	
C401-03		ECUM1H103KBN	C.CAPACITOR CH 50V 0.01U	3	
C404		ECEA1AU101	E.CAPACITOR 10V 100U	1	
C405-07		ECUM1E104ZFN	C.CAPACITOR CH 25V 0.1U	3	
C408,09		ECUM1H270JCN	C.CAPACITOR CH 50V 27P	2	
C410		ECEA1AU471	E.CAPACITOR 10V 470U	1	
C411		ECUM1E104ZFN	C.CAPACITOR CH 25V 0.1U	1	
C412		ECUM1H221JCN	C.CAPACITOR CH 50V 220P	1	
C413		ECEA1AU101	E.CAPACITOR 10V 100U	1	
C414		ECUM1H470JCN	C.CAPACITOR CH 50V 47P	1	
C415		ECUM1H180JCN	C.CAPACITOR CH 50V 18P	1	
C416		ECUM1H181JCN	C.CAPACITOR CH 50V 180P	1	
C417,18		ECUM1E104ZFN	C.CAPACITOR CH 25V 0.1U	2	
C419		ECUM1H331JCN	C.CAPACITOR CH 50V 330P	1	
C420		ECUM1H220JCN	C.CAPACITOR CH 50V 22P	1	
C421		ECUM1H680JCN	C.CAPACITOR CH 50V 68P	1	
C422		ECUM1H330JCN	C.CAPACITOR CH 50V 33P	1	
C423		ECEA1AU101	E.CAPACITOR 10V 100U	1	
C424		ECEA1CU100	E.CAPACITOR 16V 10U	1	
C425		ECUM1H221JCN	C.CAPACITOR CH 50V 220P	1	
C426		VCM0044	M.CAPACITOR 130P	1	
C427		VCM0023	M.CAPACITOR 379P	1	
C428		ECUM1H680JCN	C.CAPACITOR CH 50V 68P	1	
C429		ECUM1H390JCN	C.CAPACITOR CH 50V 39P	1	
C430		ECUM1H331JCN	C.CAPACITOR CH 50V 330P	1	
C431		ECUM1H270JCN	C.CAPACITOR CH 50V 27P	1	
C432		ECEA0JU221	E.CAPACITOR 6.3V 220U	1	
C433		ECUM1H470JCN	C.CAPACITOR CH 50V 47P	1	
C434		ECUM1H560JCN	C.CAPACITOR CH 50V 56P	1	
C435		ECUM1H020CCN	C.CAPACITOR CH 50V 2P	1	
C436,37		ECUM1E104ZFN	C.CAPACITOR CH 25V 0.1U	2	
C440		ECUM1H470JCN	C.CAPACITOR CH 50V 47P	1	
C441		ECUM1H103KBN	C.CAPACITOR CH 50V 0.01U	1	
C442,43		ECEA1CU221	E.CAPACITOR 16V 220U	2	
C444,45		ECUM1H103KBN	C.CAPACITOR CH 50V 0.01U	2	
C446,47		VCM0027	M.CAPACITOR	2	
C448		ECEA1AU101	E.CAPACITOR 10V 100U	1	
C453		ECUM1E104ZFN	C.CAPACITOR CH 25V 0.1U	1	
C467		ECUM1E104ZFN	C.CAPACITOR CH 25V 0.1U	1	
C468		ECUM1H103KBN	C.CAPACITOR CH 50V 0.01U	1	
C470		ECUM1H330JCN	C.CAPACITOR CH 50V 33P	1	
C471		ECUM1H060DCN	C.CAPACITOR CH 50V 6P	1	
C472		VCC0037F062	C.CAPACITOR 50V 62P	1	
C473		ECUM1H182JN	C.CAPACITOR CH 50V 1800P	1	
C474		ECUM1E104ZFN	C.CAPACITOR CH 25V 0.1U	1	
C475		ECUM1H103KBN	C.CAPACITOR CH 50V 0.01U	1	
C476		ECEA1AU101	E.CAPACITOR 10V 100U	1	
C477		ECUM1H050DCN	C.CAPACITOR CH 50V 50P	1	
C478		ECEA1AU101	E.CAPACITOR 10V 100U	1	
C701,02		ECUM1H103KBN	C.CAPACITOR CH 50V 0.01U	2	
C703		ECEA1AU101	E.CAPACITOR 10V 100U	1	
C704,05		ECUM1H103KBN	C.CAPACITOR CH 50V 0.01U	2	
C706		ECUM1H330JCN	C.CAPACITOR CH 50V 33P	1	
C714		ECUM1H103KBN	C.CAPACITOR CH 50V 0.01U	1	
C725		ECUM1H180JCN	C.CAPACITOR CH 50V 18P	1	
C726		ECUM1H103KBN	C.CAPACITOR CH 50V 0.01U	1	
C727		ECUM1E104ZFN	C.CAPACITOR CH 25V 0.1U	1	
C728		ECUM1H220JCN	C.CAPACITOR CH 50V 22P	1	
C729		ECUM1H121JCN	C.CAPACITOR CH 50V 120P	1	
C730,31		ECUM1H103KBN	C.CAPACITOR CH 50V 0.01U	2	
C732		ECUM1H101JCN	C.CAPACITOR CH 50V 100P	1	
C733		ECEA1AU101	E.CAPACITOR 10V 100U	1	
C734		ECUM1H331JCN	C.CAPACITOR CH 50V 330P	1	
C735		ECEA1AU101	E.CAPACITOR 10V 100U	1	
C736		ECUM1H103KBN	C.CAPACITOR CH 50V 0.01U	1	
C737		ECUM1H101JCN	C.CAPACITOR CH 50V 100P	1	
C738		ECUM1H103KBN	C.CAPACITOR CH 50V 0.01U	1	
C740-42		ECUM1H103KBN	C.CAPACITOR CH 50V 0.01U	3	
C744		ECUM1E104ZFN	C.CAPACITOR CH 25V 0.1U	1	
C745		ECUM1H103KBN	C.CAPACITOR CH 50V 0.01U	1	
C746		ECUM1E104ZFN	C.CAPACITOR CH 25V 0.1U	1	
C747		ECEA1AU101	E.CAPACITOR 10V 100U	1	
C750		ECUM1H331JCN	C.CAPACITOR CH 50V 330P	1	
C751		ECUM1H101JCN	C.CAPACITOR CH 50V 100P	1	
C752		ECUM1H152JN	C.CAPACITOR CH 50V 1500P	1	
C753		ECUM1H220JCN	C.CAPACITOR CH 50V 22P	1	
C754		ECUM1H101JCN	C.CAPACITOR CH 50V 100P	1	
C755		ECUM1H220JCN	C.CAPACITOR CH 50V 22P	1	
C756		ECUM1H680JCN	C.CAPACITOR CH 50V 68P	1	
C757		ECUM1H150JCN	C.CAPACITOR CH 50V 15P	1	
C758		ECUM1H050DCN	C.CAPACITOR CH 50V 50P	1	
C759		ECUM1E104ZFN	C.CAPACITOR CH 25V 0.1U	1	

Ref.No.		Part No.	Part Name & Description	Pcs	Remarks
C760		ECUM1H100DCN	C.CAPACITOR CH 50V 10P	1	
C762		ECUM1H221JCN	C.CAPACITOR CH 50V 220P	1	
C763		ECUM1H101JCN	C.CAPACITOR CH 50V 100P	1	
C764-66		ECUM1H103KBN	C.CAPACITOR CH 50V 0.01U	3	
C767		ECEA1AU101	E.CAPACITOR 10V 100U	1	
C768,69		ECUM1H103KBN	C.CAPACITOR CH 50V 0.01U	2	
C770		ECUM1H220JCN	C.CAPACITOR CH 50V 22P	1	
C771		ECUM1H471JCN	C.CAPACITOR CH 50V 470P	1	
C772		ECUM1E104ZFN	C.CAPACITOR CH 25V 0.1U	1	
C773-75		ECUM1H103KBN	C.CAPACITOR CH 50V 0.01U	3	
C776		ECUM1E104ZFN	C.CAPACITOR CH 25V 0.1U	1	
C777		ECEA1AU101	E.CAPACITOR 10V 100U	1	
C778,79		ECUM1E104ZFN	C.CAPACITOR CH 25V 0.1U	2	
C780,81		ECUM1H390JCN	C.CAPACITOR CH 50V 39P	2	
C782		ECEA1AU471	E.CAPACITOR 10V 470U	1	
C783		ECUM1E104ZFN	C.CAPACITOR CH 25V 0.1U	1	
C784		ECUM1H221JCN	C.CAPACITOR CH 50V 220P	1	
C785		ECEA1AU101	E.CAPACITOR 10V 100U	1	
C786		ECUM1H121JCN	C.CAPACITOR CH 50V 120P	1	
C787		ECUM1H100DCN	C.CAPACITOR CH 50V 10P	1	
C788		ECUM1H331JCN	C.CAPACITOR CH 50V 330P	1	
C789,90		ECUM1E104ZFN	C.CAPACITOR CH 25V 0.1U	2	
C791		ECUM1H331JCN	C.CAPACITOR CH 50V 330P	1	
C792		ECUM1H220JCN	C.CAPACITOR CH 50V 22P	1	
C793		ECUM1H680JCN	C.CAPACITOR CH 50V 68P	1	
C794		ECUM1H330JCN	C.CAPACITOR CH 50V 33P	1	
C796		ECEA1CU100	E.CAPACITOR 16V 10U	1	
C797		VCM0023	M.CAPACITOR 379P	1	
C799		ECEA0JU221	E.CAPACITOR 6.3V 220U	1	
C800		ECUM1H470JCN	C.CAPACITOR CH 50V 47P	1	
C801		ECUM1H020CCN	C.CAPACITOR CH 50V 2P	1	
C802		ECUM1H121JCN	C.CAPACITOR CH 50V 120P	1	
C803,04		ECUM1E104ZFN	C.CAPACITOR CH 25V 0.1U	2	
C805		ECUM1H470JCN	C.CAPACITOR CH 50V 47P	1	
C808		ECEA1CU221	E.CAPACITOR 16V 220U	1	
C810		ECEA1CU221	E.CAPACITOR 16V 220U	1	
C811,12		ECUM1H103KBN	C.CAPACITOR CH 50V 0.01U	2	
C813,14		VCM0027	M.CAPACITOR	2	
C815		ECEA1AU101	E.CAPACITOR 10V 100U	1	
C821		ECUM1E104ZFN	C.CAPACITOR CH 25V 0.1U	1	
C836		ECUM1H470JCN	C.CAPACITOR CH 50V 47P	1	
C837		ECUM1H060DCN	C.CAPACITOR CH 50V 6P	1	
C838,39		ECUM1H100DCN	C.CAPACITOR CH 50V 10P	2	
C840		VCC0037F062	C.CAPACITOR 50V 62P	1	
C843		ECEA1AU101	E.CAPACITOR 10V 100U	1	
C844		ECUM1H103KBN	C.CAPACITOR CH 50V 0.01U	1	
C845		ECUM1H050DCN	C.CAPACITOR CH 50V 50P	1	
C846		ECEA1AU101	E.CAPACITOR 10V 100U	1	
D301		MA151WK	DIODE	1	
D303,04		MA151K	DIODE	2	
D305-07		MA151WK	DIODE	3	
D308,09		MA151WA	DIODE	2	
D701		MA151WK	DIODE	1	
D702-04		MA151K	DIODE	3	
D705,06		MA151WK	DIODE	2	
DL301		VLD0190	DELAY	1	
DL701		VLD0199	DELAY	1	
FL302		VLF0658	FILTER	1	
FL303		VLF0712	FILTER	1	
FL701		VLF0652	FILTER	1	
IC10		AN79N09	IC	1	
IC11,12		AN79M05F	IC	2	
IC13		AN78M05F	IC	1	

Ref.No.		Part No.	Part Name & Description	Pcs	Remarks
IC14		AN78N05	IC	1	
IC15		AN78N09	IC	1	
IC301		AN6308S	IC	1	
IC306		NJM1496M	IC	1	
IC307		UPD4053BG	IC	1	
IC309		RC082BM	IC	1	
IC310		AN6308S	IC	1	
IC311-15		10116D	IC	5	
IC316		SN74LS123NS	IC	1	
IC317		MC74HC00AF	IC	1	
IC319		NE5539D	IC	1	
IC326		RC082BM	IC	1	
IC327		AN6308S	IC	1	
IC701		AN6308S	IC	1	
IC705		NJM1496M	IC	1	
IC706		UPD4053BG	IC	1	
IC707		AN6308S	IC	1	
IC708-12		10116D	IC	5	
IC716		NE5539D	IC	1	
IC723		AN6308S	IC	1	
L301		VLQEL05S101K	COIL 100UH	1	
L302,03		VLQEL05S100J	COIL 10UH	2	
L304		VLQEL05S101K	COIL 100UH	1	
L308		VLQEL05S3R3J	COIL 3.3UH	1	
L309,10		VLQEL05S101K	COIL 100UH	2	
L311		VLQEL05S330J	COIL 33UH	1	
L312		VLQEL05S2R7J	COIL 2.7UH	1	
L313		VLQEL05S101K	COIL 100UH	1	
L314		VLQEL05S8R2J	COIL 8.2UH	1	
L316-18		VLQEL05S101K	COIL 100UH	3	
L320,21		VLQEL05S2R2J	COIL 2.2UH	2	
L322		VLQEL05S180J	COIL 18UH	1	
L323		VLQEL05S101K	COIL 100UH	1	
L324		VLQEL05S1R0J	COIL 1UH	1	
L325-27		VLQEL05S101K	COIL 100UH	3	
L328		VLQEL05S6R8J	COIL 6.8UH	1	
L329		VLQEL05S101K	COIL 100UH	1	
L330		VLQEL05S3R3J	COIL 3.3UH	1	
L333		VLQEL05S101K	COIL 100UH	1	
L334		VLQEL05S6R8K	COIL 6.8UH	1	
L345		VLQEL05S1R0J	COIL 1UH	1	
L346		VLQEL05SR47K	COIL 0.47UH	1	
L347		VLQEL05S101K	COIL 100UH	1	
L701		VLQEL05S101K	COIL 100UH	1	
L702		VLQEL05S150J	COIL 15UH	1	
L709		VLQEL05S4R7J	COIL 4.7UH	1	
L710		VLQEL05S101K	COIL 100UH	1	
L711		VLQEL05S560J	COIL 56UH	1	
L712		VLQEL05S101K	COIL 100UH	1	
L713		VLQEL05S3R9J	COIL 3.9UH	1	
L715		VLQEL05S101K	COIL 100UH	1	
L716		VLQEL05S471J	COIL 470UH	1	
L717		VLQEL05S330J	COIL 33UH	1	
L718		VLQEL05S3R3J	COIL 3.3UH	1	
L719		VLQEL05S8R2J	COIL 8.2UH	1	
L720		VLQEL05S6R8J	COIL 6.8UH	1	
L721		VLQEL05S4R7J	COIL 4.7UH	1	
L722		VLQEL05S2R7J	COIL 2.7UH	1	
L723		VLQEL05S5R6J	COIL 5.6UH	1	
L724		VLQEL05S101K	COIL 100UH	1	
L725		VLQEL05S1R5J	COIL 1.5UH	1	
L726-28		VLQEL05S101K	COIL 100UH	3	
L729		VLQEL05S150J	COIL 15UH	1	
L731		VLQEL05S101K	COIL 100UH	1	
L732		VLQEL05S6R8K	COIL 6.8UH	1	
L743		VLQEL05S181J	COIL 180UH	1	
L746		VLQEL05S101K	COIL 100UH	1	
Q301-04		2SC2295-B	TRANSISTOR CHIP	4	(B,C)
Q313,14		2SC2295-B	TRANSISTOR CHIP	2	(B,C)

Ref.No.		Part No.	Part Name & Description	Pcs	Remarks
Q315		2SA1022-B	TRANSISTOR CHIP	1	(B,C)
Q316		2SC2295-B	TRANSISTOR CHIP	1	(B,C)
Q317,18		2SA1022-B	TRANSISTOR CHIP	2	(B,C)
Q319		IMX4	TRANSISTOR	1	
Q320		UN2113	TRANSISTOR-RESISTOR	1	
Q321		2SC2295-B	TRANSISTOR CHIP	1	(B,C)
Q323		IMX4	TRANSISTOR	1	
Q324		2SC2295-B	TRANSISTOR CHIP	1	(B,C)
Q326		2SC2295-B	TRANSISTOR CHIP	1	(B,C)
Q327		2SA1022-B	TRANSISTOR CHIP	1	(B,C)
Q329-38		2SC2295-B	TRANSISTOR CHIP	10	(B,C)
Q339,40		UN2213	TRANSISTOR-RESISTOR	2	
Q341		2SA1462	TRANSISTOR	1	
Q342,43		2SC3757	TRANSISTOR	2	(Q,R)
Q344		2SC2295-B	TRANSISTOR CHIP	1	(B,C)
Q345		2SA1022-B	TRANSISTOR CHIP	1	(B,C)
Q346		2SC2480	TRANSISTOR	1	
Q347		2SA1462	TRANSISTOR	1	
Q348		2SC2480	TRANSISTOR	1	
Q349		2SA1226	TRANSISTOR	1	
Q356-61		UN2113	TRANSISTOR-RESISTOR	6	
Q376		2SA1462	TRANSISTOR	1	
Q377		2SA1226	TRANSISTOR	1	
Q378		2SC3757	TRANSISTOR	1	(Q,R)
Q379		2SC2480	TRANSISTOR	1	
Q382-84		2SC3757	TRANSISTOR	3	(Q,R)
Q385,86		2SC2295-B	TRANSISTOR CHIP	2	(B,C)
Q387		2SA1022-B	TRANSISTOR CHIP	1	(B,C)
Q388		2SD601-R	TRANSISTOR CHIP	1	(Q,R)
Q389		2SB709-R	TRANSISTOR CHIP	1	(Q,R)
Q390		2SA1226	TRANSISTOR	1	
Q391,92		2SD601-R	TRANSISTOR CHIP	2	(Q,R)
Q393		2SB709-R	TRANSISTOR CHIP	1	(Q,R)
Q701,02		2SA1022-B	TRANSISTOR CHIP	2	(B,C)
Q710,11		2SC2295-B	TRANSISTOR CHIP	2	(B,C)
Q712		2SA1022-B	TRANSISTOR CHIP	1	(B,C)
Q713		2SC2295-B	TRANSISTOR CHIP	1	(B,C)
Q714,15		2SA1022-B	TRANSISTOR CHIP	2	(B,C)
Q716		2SC2295-B	TRANSISTOR CHIP	1	(B,C)
Q718		2SC2295-B	TRANSISTOR CHIP	1	(B,C)
Q719		2SA1022-B	TRANSISTOR CHIP	1	(B,C)
Q721-30		2SC2295-B	TRANSISTOR CHIP	10	(B,C)
Q731		UN2213	TRANSISTOR-RESISTOR	1	
Q732		2SA1462	TRANSISTOR	1	
Q733		2SC2295-B	TRANSISTOR CHIP	1	(B,C)
Q734		2SA1022-B	TRANSISTOR CHIP	1	(B,C)
Q735		2SC2480	TRANSISTOR	1	
Q736		2SA1462	TRANSISTOR	1	
Q737		2SC2480	TRANSISTOR	1	
Q738		2SA1226	TRANSISTOR	1	
Q754		2SA1462	TRANSISTOR	1	
Q755		2SA1226	TRANSISTOR	1	
Q756		2SC3757	TRANSISTOR	1	(Q,R)
Q757		2SC2480	TRANSISTOR	1	
Q758-60		2SC3757	TRANSISTOR	3	(Q,R)
Q761		2SC2295-B	TRANSISTOR CHIP	1	(B,C)
Q762		2SA1022-B	TRANSISTOR CHIP	1	(B,C)
Q763		2SD601-R	TRANSISTOR CHIP	1	(Q,R)
Q764		2SB709-R	TRANSISTOR CHIP	1	(Q,R)
Q765		2SA1226	TRANSISTOR	1	
Q766		2SD601-R	TRANSISTOR CHIP	1	(Q,R)
			RESISTORS		
R20		ERJ6GEYJ472	M.RESISTOR CH 1/10W 4.7K	1	
R101		ERJ6GEYJ470	M.RESISTOR CH 1/10W 47	1	
R301		ERJ6GEYJ470	M.RESISTOR CH 1/10W 47	1	
R302		ERJ6GEYJ681	M.RESISTOR CH 1/10W 680	1	
R303		ERJ6GEYJ102	M.RESISTOR CH 1/10W 1K	1	
R304		ERJ6GEYJ332	M.RESISTOR CH 1/10W 3.3K	1	
R305		ERJ6GEYJ470	M.RESISTOR CH 1/10W 47	1	
R306		ERJ6GEYJ681	M.RESISTOR CH 1/10W 680	1	
R307		ERJ6GEYJ102	M.RESISTOR CH 1/10W 1K	1	
R308		ERJ6GEYJ332	M.RESISTOR CH 1/10W 3.3K	1	

Ref.No.		Part No.	Part Name & Description	Pcs	Remarks
R309		ERJ6GEYJ222	M.RESISTOR CH 1/10W 2.2K	1	
R310		ERJ6GEYJ470	M.RESISTOR CH 1/10W 47	1	
R332		ERJ6GEYJ152	M.RESISTOR CH 1/10W 1.5K	1	
R333,34		ERJ6GEYG471	M.RESISTOR CH 1/10W 470	2	
R335,36		ERJ6GEYJ470	M.RESISTOR CH 1/10W 47	2	
R337,38		ERJ6GEYJ222	M.RESISTOR CH 1/10W 2.2K	2	
R339,40		VRE0034E43A	M.RESISTOR 1/10W	2	
R341		ERJ6GEYJ470	M.RESISTOR CH 1/10W 47	1	
R342		VRE0034E43A	M.RESISTOR 1/10W	1	
R343		VRE0034E89A	M.RESISTOR CH 1/10W 825	1	
R344		ERJ6GEYJ470	M.RESISTOR CH 1/10W 47	1	
R345		ERJ6GEYJ222	M.RESISTOR CH 1/10W 2.2K	1	
R346		ERJ6GEYJ102	M.RESISTOR CH 1/10W 1K	1	
R347		VRE0034E51A	M.RESISTOR CH 1/10W 357	1	
R348		ERJ6GEYJ153	M.RESISTOR CH 1/10W 15K	1	
R349		ERJ6GEYG223	M.RESISTOR CH 1/10W 22K	1	
R350,51		ERJ6GEYJ220	M.RESISTOR CH 1/10W 22	2	
R352		ERJ6GEYJ470	M.RESISTOR CH 1/10W 47	1	
R353		ERJ6GEYJ152	M.RESISTOR CH 1/10W 1.5K	1	
R354		ERJ6GEYG471	M.RESISTOR CH 1/10W 470	1	
R355		ERJ6GEYJ102	M.RESISTOR CH 1/10W 1K	1	
R356		ERJ6GEYJ221	M.RESISTOR CH 1/10W 220	1	
R357		ERJ6GEYJ222	M.RESISTOR CH 1/10W 2.2K	1	
R358		ERJ6GEYJ101	M.RESISTOR CH 1/10W 100	1	
R359		ERJ6GEYJ472	M.RESISTOR CH 1/10W 4.7K	1	
R360,61		ERJ6GEYJ473	M.RESISTOR CH 1/10W 47K	2	
R362		ERJ6GEYJ472	M.RESISTOR CH 1/10W 4.7K	1	
R363,64		ERJ6GEYG223	M.RESISTOR CH 1/10W 22K	2	
R365		ERJ6GEYJ473	M.RESISTOR CH 1/10W 47K	1	
R366		ERJ6GEYG223	M.RESISTOR CH 1/10W 22K	1	
R367		ERJ6GEYJ683	M.RESISTOR CH 1/10W 68K	1	
R368		ERJ6GEYJ472	M.RESISTOR CH 1/10W 4.7K	1	
R369		ERJ6GEYJ103	M.RESISTOR CH 1/10W 10K	1	
R370		ERJ6GEYJ683	M.RESISTOR CH 1/10W 68K	1	
R371		ERJ6GEYJ682	M.RESISTOR CH 1/10W 6.8K	1	
R372		ERJ6GEYJ470	M.RESISTOR CH 1/10W 47	1	
R373		ERJ6GEYJ681	M.RESISTOR CH 1/10W 680	1	
R374		ERJ6GEYG151	M.RESISTOR CH 1/10W 150	1	
R375		ERJ6GEYJ470	M.RESISTOR CH 1/10W 47	1	
R386		ERJ6GEYJ103	M.RESISTOR CH 1/10W 10K	1	
R387,88		ERJ6GEYJ473	M.RESISTOR CH 1/10W 47K	2	
R389		ERJ6GEYJ103	M.RESISTOR CH 1/10W 10K	1	
R390		ERJ6GEYJ472	M.RESISTOR CH 1/10W 4.7K	1	
R391		ERJ6GEYJ474	M.RESISTOR CH 1/10W 470K	1	
R392		ERJ6GEYJ473	M.RESISTOR CH 1/10W 47K	1	
R393,94		ERJ6GEYG471	M.RESISTOR CH 1/10W 470	2	
R395		ERJ6GEYJ101	M.RESISTOR CH 1/10W 100	1	
R396		ERJ6GEYJ222	M.RESISTOR CH 1/10W 2.2K	1	
R397		ERJ6GEYJ470	M.RESISTOR CH 1/10W 47	1	
R398		ERJ6GEYJ152	M.RESISTOR CH 1/10W 1.5K	1	
R399,00		ERJ6GEYG301	M.RESISTOR CH 1/10W 300	2	
R401		ERJ6GEYJ470	M.RESISTOR CH 1/10W 47	1	
R402		ERJ6GEYJ102	M.RESISTOR CH 1/10W 1K	1	
R403		ERJ6GEYJ681	M.RESISTOR CH 1/10W 680	1	
R404		ERJ6GEYJ102	M.RESISTOR CH 1/10W 1K	1	
R405		ERJ6GEYJ152	M.RESISTOR CH 1/10W 1.5K	1	
R406		ERJ6GEYJ470	M.RESISTOR CH 1/10W 47	1	
R407		ERJ6GEYJ221	M.RESISTOR CH 1/10W 220	1	
R408		ERJ6GEYJ222	M.RESISTOR CH 1/10W 2.2K	1	
R409		ERJ6GEYJ470	M.RESISTOR CH 1/10W 47	1	
R410		ERJ6GEYJ152	M.RESISTOR CH 1/10W 1.5K	1	
R411		ERJ6GEYJ331	M.RESISTOR CH 1/10W 330	1	
R412		VRE0034E51A	M.RESISTOR CH 1/10W 357	1	
R413		ERJ6GEYJ470	M.RESISTOR CH 1/10W 47	1	
R414		ERJ6GEYJ222	M.RESISTOR CH 1/10W 2.2K	1	
R415		ERJ6GEYJ470	M.RESISTOR CH 1/10W 47	1	
R426		ERJ6GEYJ470	M.RESISTOR CH 1/10W 47	1	
R427-34		ERJ6GEYJ102	M.RESISTOR CH 1/10W 1K	8	
R435,36		ERJ6GEYJ332	M.RESISTOR CH 1/10W 3.3K	2	
R437		ERJ6GEYJ101	M.RESISTOR CH 1/10W 100	1	
R438,39		ERJ6GEYG471	M.RESISTOR CH 1/10W 470	2	
R440		ERJ6GEYJ470	M.RESISTOR CH 1/10W 47	1	
R441,42		ERJ6GEYJ681	M.RESISTOR CH 1/10W 680	2	
R443,44		ERJ6GEYJ101	M.RESISTOR CH 1/10W 100	2	
R445		ERJ6GEYJ470	M.RESISTOR CH 1/10W 47	1	

Ref.No.		Part No.	Part Name & Description	Pcs	Remarks
R446		ERJ6GEYG151	M.RESISTOR CH 1/10W 150	1	
R447,48		ERJ6GEYJ222	M.RESISTOR CH 1/10W 2.2K	2	
R449		ERJ6GEYJ470	M.RESISTOR CH 1/10W 47	1	
R450,51		ERJ6GEYJ222	M.RESISTOR CH 1/10W 2.2K	2	
R452,53		ERJ6GEYJ470	M.RESISTOR CH 1/10W 47	2	
R454-65		ERJ6GEYJ102	M.RESISTOR CH 1/10W 1K	12	
R466		ERJ6GEYJ683	M.RESISTOR CH 1/10W 68K	1	
R467,68		ERJ6GEYJ103	M.RESISTOR CH 1/10W 10K	2	
R469,70		ERJ6GEYJ680	M.RESISTOR CH 1/10W 68	2	
R471,72		ERJ6GEYJ332	M.RESISTOR CH 1/10W 3.3K	2	
R473		ERJ6GEYJ101	M.RESISTOR CH 1/10W 100	1	
R474		ERDS2TJ222	C.RESISTOR 1/4W 2.2K	1	
R475		ERJ6GEYJ102	M.RESISTOR CH 1/10W 1K	1	
R477		ERJ6GEYG471	M.RESISTOR CH 1/10W 470	1	
R478		ERJ6GEYJ102	M.RESISTOR CH 1/10W 1K	1	
R479		ERJ6GEYJ222	M.RESISTOR CH 1/10W 2.2K	1	
R480,81		ERJ6GEYG471	M.RESISTOR CH 1/10W 470	2	
R482		ERJ6GEYJ470	M.RESISTOR CH 1/10W 47	1	
R483,84		ERJ6GEYJ333	M.RESISTOR CH 1/10W 33K	2	
R485,86		ERJ6GEYJ102	M.RESISTOR CH 1/10W 1K	2	
R487		ERJ6GEYJ222	M.RESISTOR CH 1/10W 2.2K	1	
R488		ERJ6GEYJ221	M.RESISTOR CH 1/10W 220	1	
R489		ERJ6GEYJ392	M.RESISTOR CH 1/10W 3.9K	1	
R490		ERJ6GEYJ470	M.RESISTOR CH 1/10W 47	1	
R491		ERJ6GEYG223	M.RESISTOR CH 1/10W 22K	1	
R492		ERJ6GEYG471	M.RESISTOR CH 1/10W 470	1	
R493		ERJ6GEYJ152	M.RESISTOR CH 1/10W 1.5K	1	
R494,95		ERJ6GEYJ101	M.RESISTOR CH 1/10W 100	2	
R496		ERJ6GEYJ222	M.RESISTOR CH 1/10W 2.2K	1	
R497		ERJ6GEYJ102	M.RESISTOR CH 1/10W 1K	1	
R498		ERJ6GEYJ101	M.RESISTOR CH 1/10W 100	1	
R499		ERJ6GEYJ332	M.RESISTOR CH 1/10W 3.3K	1	
R500		ERJ6GEYG223	M.RESISTOR CH 1/10W 22K	1	
R501		ERJ6GEYJ332	M.RESISTOR CH 1/10W 3.3K	1	
R502		ERJ6GEYJ472	M.RESISTOR CH 1/10W 4.7K	1	
R503		ERJ6GEYJ103	M.RESISTOR CH 1/10W 10K	1	
R504		ERJ6GEYJ184	M.RESISTOR CH 1/10W 180K	1	
R505,06		ERJ6GEYJ473	M.RESISTOR CH 1/10W 47K	2	
R508		ERJ6GEYG471	M.RESISTOR CH 1/10W 470	1	
R509		ERJ6GEYJ221	M.RESISTOR CH 1/10W 220	1	
R510		ERJ6GEYJ392	M.RESISTOR CH 1/10W 3.9K	1	
R511		VRE0034E27B	M.RESISTOR CH 1/10W 1.87K	1	
R512		VRE0034E751	M.RESISTOR CH 1/10W 750	1	
R513		ERJ6GEYJ332	M.RESISTOR CH 1/10W 3.3K	1	
R514		ERJ6GEYJ102	M.RESISTOR CH 1/10W 1K	1	
R515		ERJ6GEYJ682	M.RESISTOR CH 1/10W 6.8K	1	
R516		ERJ6GEYG301	M.RESISTOR CH 1/10W 300	1	
R518		ERJ6GEYG431	M.RESISTOR CH 1/10W 430	1	
R519		ERJ6GEYJ332	M.RESISTOR CH 1/10W 3.3K	1	
R520		ERJ6GEYJ101	M.RESISTOR CH 1/10W 100	1	
R521		ERJ6GEYG151	M.RESISTOR CH 1/10W 150	1	
R522		VRE0034E26A	M.RESISTOR CH 1/10W 182	1	
R523		VRE0034E51A	M.RESISTOR CH 1/10W 357	1	
R524		VRE0034E89A	M.RESISTOR CH 1/10W 825	1	
R525		ERJ6GEYG331	M.RESISTOR CH 1/10W 330	1	
R526,27		ERJ6GEYJ470	M.RESISTOR CH 1/10W 47	2	
R528		ERJ6GEYJ101	M.RESISTOR CH 1/10W 100	1	
R529		ERJ6GEYJ102	M.RESISTOR CH 1/10W 1K	1	
R530		ERJ6GEYJ681	M.RESISTOR CH 1/10W 680	1	
R531,32		ERJ6GEYJ273	M.RESISTOR CH 1/10W 27K	2	
R533,34		ERJ6GEYJ183	M.RESISTOR CH 1/10W 18K	2	
R535,36		ERJ6GEYJ221	M.RESISTOR CH 1/10W 220	2	
R537		ERJ6GEYG223	M.RESISTOR CH 1/10W 22K	1	
R538		ERJ6GEYJ470	M.RESISTOR CH 1/10W 47	1	
R539		ERJ6GEYG301	M.RESISTOR CH 1/10W 300	1	
R540		VRE0034E24A	M.RESISTOR 1/10W	1	
R541		VRE0034E89A	M.RESISTOR CH 1/10W 825	1	
R542		VRE0034E51A	M.RESISTOR CH 1/10W 357	1	
R543		VRE0034E89A	M.RESISTOR CH 1/10W 825	1	
R544		ERJ6GEYJ392	M.RESISTOR CH 1/10W 3.9K	1	
R545		ERJ6GEYJ222	M.RESISTOR CH 1/10W 2.2K	1	
R546		ERJ6GEYJ470	M.RESISTOR CH 1/10W 47	1	
R561-63		ERJ6GEYJ473	M.RESISTOR CH 1/10W 47K	3	
R564		ERJ6GEYJ222	M.RESISTOR CH 1/10W 2.2K	1	
R565		ERJ6GEYG223	M.RESISTOR CH 1/10W 22K	1	

Ref.No.		Part No.	Part Name & Description	Pcs	Remarks
R566		ERJ6GEYJ222	M.RESISTOR CH 1/10W 2.2K	1	
R567		ERJ6GEYG223	M.RESISTOR CH 1/10W 22K	1	
R620		ERJ6GEYJ101	M.RESISTOR CH 1/10W 100	1	
R624-26		ERJ6GEYJ103	M.RESISTOR CH 1/10W 10K	3	
R627		ERJ6GEYJ472	M.RESISTOR CH 1/10W 4.7K	1	
R628		ERJ6GEYG223	M.RESISTOR CH 1/10W 22K	1	
R629		ERJ6GEYJ472	M.RESISTOR CH 1/10W 4.7K	1	
R630,31		ERJ6GEYJ101	M.RESISTOR CH 1/10W 100	2	
R636		ERJ6GEYJ470	M.RESISTOR CH 1/10W 47	1	
R637		ERJ6GEYJ102	M.RESISTOR CH 1/10W 1K	1	
R639,40		ERJ6GEYJ331	M.RESISTOR CH 1/10W 330	2	
R644,45		ERJ6GEYJ470	M.RESISTOR CH 1/10W 47	2	
R646		ERJ6GEYJ682	M.RESISTOR CH 1/10W 6.8K	1	
R647,48		ERJ6GEYJ221	M.RESISTOR CH 1/10W 220	2	
R649		ERJ6GEYJ682	M.RESISTOR CH 1/10W 6.8K	1	
R650-53		ERJ6GEYJ101	M.RESISTOR CH 1/10W 100	4	
R656		ERJ6GEYJ470	M.RESISTOR CH 1/10W 47	1	
R657		ERDS2TO	C.RESISTOR 1/4W 0	1	
R660		VRE0034E51A	M.RESISTOR CH 1/10W 357	1	
R663		ERJ6GEYJ153	M.RESISTOR CH 1/10W 15K	1	
R664		ERJ6GEYK5R6	M.RESISTOR CH 1/10W 5.6	1	
R665		ERJ6GEYJ100	M.RESISTOR CH 1/10W 10	1	
R668		ERJ6GEYJ472	M.RESISTOR CH 1/10W 4.7K	1	
R669		ERJ6GEYJ102	M.RESISTOR CH 1/10W 1K	1	
R670		ERJ6GEYJ681	M.RESISTOR CH 1/10W 680	1	
R671		ERJ6GEYJ472	M.RESISTOR CH 1/10W 4.7K	1	
R672		ERJ6GEYJ103	M.RESISTOR CH 1/10W 10K	1	
R673		ERJ6GEYJ470	M.RESISTOR CH 1/10W 47	1	
R674		ERJ6GEYJ222	M.RESISTOR CH 1/10W 2.2K	1	
R675,76		ERJ6GEYJ472	M.RESISTOR CH 1/10W 4.7K	2	
R677		ERJ6GEYJ681	M.RESISTOR CH 1/10W 680	1	
R678		ERJ6GEYJ472	M.RESISTOR CH 1/10W 4.7K	1	
R679		ERJ6GEYJ103	M.RESISTOR CH 1/10W 10K	1	
R680		ERJ6GEYJ470	M.RESISTOR CH 1/10W 47	1	
R681		ERJ6GEYJ104	M.RESISTOR CH 1/10W 100K	1	
R682		ERJ6GEYJ333	M.RESISTOR CH 1/10W 33K	1	
R701		ERJ6GEYJ470	M.RESISTOR CH 1/10W 47	1	
R702		ERJ6GEYJ102	M.RESISTOR CH 1/10W 1K	1	
R703		VRE0034E89A	M.RESISTOR CH 1/10W 825	1	
R704		VRE0034E51A	M.RESISTOR CH 1/10W 357	1	
R705		ERJ6GEYJ681	M.RESISTOR CH 1/10W 680	1	
R711,12		ERJ6GEYJ470	M.RESISTOR CH 1/10W 47	2	
R723,24		ERJ6GEYJ101	M.RESISTOR CH 1/10W 100	2	
R725		ERJ6GEYJ102	M.RESISTOR CH 1/10W 1K	1	
R726		ERJ6GEYJ470	M.RESISTOR CH 1/10W 47	1	
R727		ERJ6GEYG471	M.RESISTOR CH 1/10W 470	1	
R728,29		ERJ6GEYJ470	M.RESISTOR CH 1/10W 47	2	
R730		ERJ6GEYG471	M.RESISTOR CH 1/10W 470	1	
R731		ERJ6GEYJ222	M.RESISTOR CH 1/10W 2.2K	1	
R732,33		ERJ6GEYG681	M.RESISTOR CH 1/10W 680	2	
R734		ERJ6GEYJ222	M.RESISTOR CH 1/10W 2.2K	1	
R735		ERJ6GEYJ470	M.RESISTOR CH 1/10W 47	1	
R736		VRE0034E43A	M.RESISTOR 1/10W	1	
R737		ERJ6GEYJ332	M.RESISTOR CH 1/10W 3.3K	1	
R738		VRE0034E89A	M.RESISTOR CH 1/10W 825	1	
R739		ERJ6GEYJ470	M.RESISTOR CH 1/10W 47	1	
R740		ERJ6GEYJ222	M.RESISTOR CH 1/10W 2.2K	1	
R741		ERJ6GEYJ182	M.RESISTOR CH 1/10W 1.8K	1	
R742		VRE0034E51A	M.RESISTOR CH 1/10W 357	1	
R743		ERJ6GEYJ153	M.RESISTOR CH 1/10W 15K	1	
R744		ERJ6GEYJ473	M.RESISTOR CH 1/10W 47K	1	
R745,46		ERJ6GEYJ220	M.RESISTOR CH 1/10W 22	2	
R747		ERJ6GEYJ470	M.RESISTOR CH 1/10W 47	1	
R748		ERJ6GEYJ152	M.RESISTOR CH 1/10W 1.5K	1	
R749		VRE0034E51A	M.RESISTOR CH 1/10W 357	1	
R750		ERJ6GEYJ102	M.RESISTOR CH 1/10W 1K	1	
R751		ERJ6GEYJ271	M.RESISTOR CH 1/10W 270	1	
R752		ERJ6GEYJ222	M.RESISTOR CH 1/10W 2.2K	1	
R753		ERJ6GEYJ472	M.RESISTOR CH 1/10W 4.7K	1	
R754		ERJ6GEYJ103	M.RESISTOR CH 1/10W 10K	1	
R755		ERJ6GEYJ472	M.RESISTOR CH 1/10W 4.7K	1	
R756		ERJ6GEYJ682	M.RESISTOR CH 1/10W 6.8K	1	
R757		ERJ6GEYG471	M.RESISTOR CH 1/10W 470	1	
R758		ERJ6GEYJ101	M.RESISTOR CH 1/10W 100	1	
R759		ERJ6GEYJ222	M.RESISTOR CH 1/10W 2.2K	1	

Ref.No.	Part No.	Part Name & Description	Pcs	Remarks
R760	ERJ6GEYJ470	M.RESISTOR CH 1/10W 47	1	
R761	ERJ6GEYJ152	M.RESISTOR CH 1/10W 1.5K	1	
R762,63	ERJ6GEYG391	M.RESISTOR CH 1/10W 390	2	
R764	ERJ6GEYJ470	M.RESISTOR CH 1/10W 47	1	
R765	ERJ6GEYJ102	M.RESISTOR CH 1/10W 1K	1	
R766	ERJ6GEYJ681	M.RESISTOR CH 1/10W 680	1	
R767	ERJ6GEYJ102	M.RESISTOR CH 1/10W 1K	1	
R768	ERJ6GEYJ152	M.RESISTOR CH 1/10W 1.5K	1	
R769	ERJ6GEYJ470	M.RESISTOR CH 1/10W 47	1	
R770	ERJ6GEYJ221	M.RESISTOR CH 1/10W 220	1	
R771	ERJ6GEYJ222	M.RESISTOR CH 1/10W 2.2K	1	
R772	ERJ6GEYJ470	M.RESISTOR CH 1/10W 47	1	
R773	ERJ6GEYJ152	M.RESISTOR CH 1/10W 1.5K	1	
R774	ERJ6GEYJ331	M.RESISTOR CH 1/10W 330	1	
R775	VRE0034E51A	M.RESISTOR CH 1/10W 357	1	
R776	ERJ6GEYJ470	M.RESISTOR CH 1/10W 47	1	
R777	ERJ6GEYJ222	M.RESISTOR CH 1/10W 2.2K	1	
R778	ERJ6GEYJ470	M.RESISTOR CH 1/10W 47	1	
R789	ERJ6GEYJ470	M.RESISTOR CH 1/10W 47	1	
R790-97	ERJ6GEYJ102	M.RESISTOR CH 1/10W 1K	8	
R798,99	ERJ6GEYJ332	M.RESISTOR CH 1/10W 3.3K	2	
R800	ERJ6GEYJ101	M.RESISTOR CH 1/10W 100	1	
R801,02	ERJ6GEYG471	M.RESISTOR CH 1/10W 470	2	
R803	ERJ6GEYJ470	M.RESISTOR CH 1/10W 47	1	
R804,05	ERJ6GEYJ681	M.RESISTOR CH 1/10W 680	2	
R806,07	ERJ6GEYJ101	M.RESISTOR CH 1/10W 100	2	
R808	ERJ6GEYJ470	M.RESISTOR CH 1/10W 47	1	
R809	ERJ6GEYG151	M.RESISTOR CH 1/10W 150	1	
R810,11	ERJ6GEYJ222	M.RESISTOR CH 1/10W 2.2K	2	
R812	ERJ6GEYJ470	M.RESISTOR CH 1/10W 47	1	
R813,14	ERJ6GEYJ222	M.RESISTOR CH 1/10W 2.2K	2	
R815,16	ERJ6GEYJ470	M.RESISTOR CH 1/10W 47	2	
R817-28	ERJ6GEYJ102	M.RESISTOR CH 1/10W 1K	12	
R829	ERJ6GEYJ683	M.RESISTOR CH 1/10W 68K	1	
R830,31	ERJ6GEYJ103	M.RESISTOR CH 1/10W 10K	2	
R832,33	ERJ6GEYJ150	M.RESISTOR CH 1/10W 15	2	
R834,35	ERJ6GEYJ332	M.RESISTOR CH 1/10W 3.3K	2	
R836	ERJ6GEYJ101	M.RESISTOR CH 1/10W 100	1	
R837	ERDS2TJ222	C.RESISTOR 1/4W 2.2K	1	
R838-40	ERJ6GEYJ102	M.RESISTOR CH 1/10W 1K	3	
R842	ERJ6GEYJ222	M.RESISTOR CH 1/10W 2.2K	1	
R843,44	ERJ6GEYG471	M.RESISTOR CH 1/10W 470	2	
R845	ERJ6GEYJ470	M.RESISTOR CH 1/10W 47	1	
R846,47	ERJ6GEYJ333	M.RESISTOR CH 1/10W 33K	2	
R848,49	ERJ6GEYJ102	M.RESISTOR CH 1/10W 1K	2	
R850	ERJ6GEYJ222	M.RESISTOR CH 1/10W 2.2K	1	
R851	ERJ6GEYJ221	M.RESISTOR CH 1/10W 220	1	
R852	ERJ6GEYJ392	M.RESISTOR CH 1/10W 3.9K	1	
R853	ERJ6GEYJ470	M.RESISTOR CH 1/10W 47	1	
R854	ERJ6GEYG471	M.RESISTOR CH 1/10W 470	1	
R855	ERJ6GEYJ152	M.RESISTOR CH 1/10W 1.5K	1	
R856,57	ERJ6GEYJ101	M.RESISTOR CH 1/10W 100	2	
R858	ERJ6GEYJ222	M.RESISTOR CH 1/10W 2.2K	1	
R859	ERJ6GEYJ102	M.RESISTOR CH 1/10W 1K	1	
R860	ERJ6GEYJ101	M.RESISTOR CH 1/10W 100	1	
R861	ERJ6GEYJ332	M.RESISTOR CH 1/10W 3.3K	1	
R862	ERJ6GEYG223	M.RESISTOR CH 1/10W 22K	1	
R863	ERJ6GEYJ332	M.RESISTOR CH 1/10W 3.3K	1	
R864	ERJ6GEYJ472	M.RESISTOR CH 1/10W 4.7K	1	
R865	ERJ6GEYJ103	M.RESISTOR CH 1/10W 10K	1	
R866	ERJ6GEYJ184	M.RESISTOR CH 1/10W 180K	1	
R867	ERJ6GEYJ473	M.RESISTOR CH 1/10W 47K	1	
R868	ERJ6GEYG471	M.RESISTOR CH 1/10W 470	1	
R870	ERJ6GEYG471	M.RESISTOR CH 1/10W 470	1	
R871	ERJ6GEYJ221	M.RESISTOR CH 1/10W 220	1	
R872	ERJ6GEYJ392	M.RESISTOR CH 1/10W 3.9K	1	
R873	VRE0034E27B	M.RESISTOR CH 1/10W 1.87K	1	
R874	VRE0034E751	M.RESISTOR CH 1/10W 750	1	
R875	ERJ6GEYJ332	M.RESISTOR CH 1/10W 3.3K	1	
R876	ERJ6GEYJ102	M.RESISTOR CH 1/10W 1K	1	
R878	ERJ6GEYG301	M.RESISTOR CH 1/10W 300	1	
R879	ERJ6GEYG431	M.RESISTOR CH 1/10W 430	1	
R880	ERJ6GEYJ332	M.RESISTOR CH 1/10W 3.3K	1	
R881	ERJ6GEYJ101	M.RESISTOR CH 1/10W 100	1	
R882	ERJ6GEYG151	M.RESISTOR CH 1/10W 150	1	

Ref.No.	Part No.	Part Name & Description	Pcs	Remarks
R883	VRE0034E26A	M.RESISTOR CH 1/10W 182	1	
R884	ERJ6GEYJ391	M.RESISTOR CH 1/10W 390	1	
R885	VRE0034E89A	M.RESISTOR CH 1/10W 825	1	
R886,87	ERJ6GEYJ470	M.RESISTOR CH 1/10W 47	2	
R888	VRE0034E51A	M.RESISTOR CH 1/10W 357	1	
R889	ERJ6GEYJ681	M.RESISTOR CH 1/10W 680	1	
R890	ERJ6GEYJ273	M.RESISTOR CH 1/10W 27K	1	
R891	ERJ6GEYJ183	M.RESISTOR CH 1/10W 18K	1	
R892	ERJ6GEYJ221	M.RESISTOR CH 1/10W 220	1	
R893	ERJ6GEYJ273	M.RESISTOR CH 1/10W 27K	1	
R894	ERJ6GEYJ183	M.RESISTOR CH 1/10W 18K	1	
R895	ERJ6GEYJ221	M.RESISTOR CH 1/10W 220	1	
R896	ERJ6GEYG223	M.RESISTOR CH 1/10W 22K	1	
R897	ERJ6GEYJ470	M.RESISTOR CH 1/10W 47	1	
R898	VRE0034E24A	M.RESISTOR 1/10W	1	
R899	VRE0034E89A	M.RESISTOR CH 1/10W 825	1	
R900	ERJ6GEYG301	M.RESISTOR CH 1/10W 300	1	
R901	VRE0034E51A	M.RESISTOR CH 1/10W 357	1	
R902	VRE0034E89A	M.RESISTOR CH 1/10W 825	1	
R903	ERJ6GEYJ392	M.RESISTOR CH 1/10W 3.9K	1	
R904	ERJ6GEYJ470	M.RESISTOR CH 1/10W 47	1	
R905	ERJ6GEYJ222	M.RESISTOR CH 1/10W 2.2K	1	
R964	ERJ6GEYJ101	M.RESISTOR CH 1/10W 100	1	
R965	ERJ6GEYJ102	M.RESISTOR CH 1/10W 1K	1	
R966-68	ERJ6GEYJ103	M.RESISTOR CH 1/10W 10K	3	
R969,70	ERJ6GEYJ472	M.RESISTOR CH 1/10W 4.7K	2	
R971	ERJ6GEYG223	M.RESISTOR CH 1/10W 22K	1	
R975,76	ERJ6GEYJ470	M.RESISTOR CH 1/10W 47	2	
R977	ERJ6GEYJ682	M.RESISTOR CH 1/10W 6.8K	1	
R978,79	ERJ6GEYJ221	M.RESISTOR CH 1/10W 220	2	
R980	ERJ6GEYJ682	M.RESISTOR CH 1/10W 6.8K	1	
R981,82	ERJ6GEYJ101	M.RESISTOR CH 1/10W 100	2	
R985	ERJ6GEYJ470	M.RESISTOR CH 1/10W 47	1	
R986,87	VRE0034E51A	M.RESISTOR CH 1/10W 357	2	
R989	ERJ6GEYJ472	M.RESISTOR CH 1/10W 4.7K	1	
R991	ERJ6GEY0R00	M.RESISTOR CH 1/10W 0	1	
R992	ERDS2T0	C.RESISTOR 1/4W 0	1	
R993	VRE0034E51A	M.RESISTOR CH 1/10W 357	1	
R996	ERJ6GEYJ220	M.RESISTOR CH 1/10W 22	1	
R1001	ERJ6GEYJ102	M.RESISTOR CH 1/10W 1K	1	
R1002	ERJ6GEYJ472	M.RESISTOR CH 1/10W 4.7K	1	
R1003	ERJ6GEYJ681	M.RESISTOR CH 1/10W 680	1	
R1004	ERJ6GEYJ472	M.RESISTOR CH 1/10W 4.7K	1	
R1005	ERJ6GEYJ103	M.RESISTOR CH 1/10W 10K	1	
R1006	ERJ6GEYJ470	M.RESISTOR CH 1/10W 47	1	
R1007	ERJ6GEYJ222	M.RESISTOR CH 1/10W 2.2K	1	
R1008,09	ERJ6GEYJ472	M.RESISTOR CH 1/10W 4.7K	2	
SW304	VSS0126	SWITCH	1	
SW704	VSS0126	SWITCH	1	
TP301,02	VJR0646	TEST POINT	2	
TP306-11	VJR0646	TEST POINT	6	
TP315	VJR0646	TEST POINT	1	
TP701-08	VJR0646	TEST POINT	8	
TPG301-03	VJR0646	TEST POINT	3	
TPG701-03	VJR0646	TEST POINT	3	
VC301	ECV1ZW10X53T	TRIMMER 10P	1	
VC701	ECV1ZW20X53T	V.CAPACITOR 20P	1	
VL301,02	EIR7QF016B	COIL	2	
VL701	EIR7QF016B	COIL	1	
VL702	EIR7QF015B	COIL	1	

Ref.No.		Part No.	Part Name & Description	Pcs	Remarks
VR301		VRV0109B501	V.RESISTOR 500	1	
VR302		VRV0109B102	V.RESISTOR 1K	1	
VR303		VRV0109B501	V.RESISTOR 500	1	
VR304		VRV0109B102	V.RESISTOR 1K	1	
VR309		VRV0109B101	V.RESISTOR 100	1	
VR310		VRV0109B502	V.RESISTOR 5K	1	
VR311		VRV0109B501	V.RESISTOR 500	1	
VR312		VRV0064B104	V.RESISTOR 100K	1	
VR313,14		VRV0110B502	V.RESISTOR 5K	2	
VR317		VRV0109B501	V.RESISTOR 500	1	
VR318		VRV0109B203	V.RESISTOR 20K	1	
VR319,20		VRV0109B102	V.RESISTOR 1K	2	
VR321		VRV0109B203	V.RESISTOR 20K	1	
VR322		VRV0109B102	V.RESISTOR 1K	1	
VR323		VRV0109B203	V.RESISTOR 20K	1	
VR324		VRV0109B102	V.RESISTOR 1K	1	
VR325		VRV0109B202	V.RESISTOR 2K	1	
VR701,02		VRV0109B501	V.RESISTOR 500	2	
VR710,11		VRV0110B502	V.RESISTOR 5K	2	
VR714		VRV0109B501	V.RESISTOR 500	1	
VR715		VRV0109B203	V.RESISTOR 20K	1	
VR716,17		VRV0109B102	V.RESISTOR 1K	2	
VR718		VRV0109B203	V.RESISTOR 20K	1	
VR719		VRV0109B102	V.RESISTOR 1K	1	
VR720		VRV0109B203	V.RESISTOR 20K	1	
VR721		VRV0109B102	V.RESISTOR 1K	1	
VR722		VRV0109B202	V.RESISTOR 2K	1	
VR727		VRV0109B101	V.RESISTOR 100	1	
			MISCELLANEOUS		
		VML2143	CARD PULLER	1	
		VML2144	CARD PULLER	1	
		VMZ1547	BARRIER	1	
		VXA3966	P.C.B. SHIELD PLATE	1	
		XYNV3+K6FR	SCREW	5	

Ref.No.		Part No.	Part Name & Description	Pcs	Remarks
	■	VEP83098G	P.C.BOARD W/COMPONENT		FOR AU-62H
			W3 MOD & DEMOD		
			CAPACITORS		
C62		ECUM1E104ZFN	C.CAPACITOR CH 25V 0.1U	1	
C63		ECEA1CU101	E.CAPACITOR 16V 100U	1	
C64		ECUM1E104ZFN	C.CAPACITOR CH 25V 0.1U	1	
C65		ECSF1CE106	E.CAPACITOR 16V 10U	1	
C66		ECUM1E104ZFN	C.CAPACITOR CH 25V 0.1U	1	
C67		ECSF1CE106	E.CAPACITOR 16V 10U	1	
C68		ECUM1E104ZFN	C.CAPACITOR CH 25V 0.1U	1	
C69,70		ECSF1CE106	E.CAPACITOR 16V 10U	2	
C71		ECUM1E104ZFN	C.CAPACITOR CH 25V 0.1U	1	
C72		ECEA1CU101	E.CAPACITOR 16V 100U	1	
C301,02		ECUM1H103KBN	C.CAPACITOR CH 50V 0.01U	2	
C303		ECUM1H220JCN	C.CAPACITOR CH 50V 22P	1	
C304,05		ECUM1H103KBN	C.CAPACITOR CH 50V 0.01U	2	
C306		ECUM1H220JCN	C.CAPACITOR CH 50V 22P	1	
C307		ECEA1AU101	E.CAPACITOR 10V 100U	1	
C308,09		ECUM1H103KBN	C.CAPACITOR CH 50V 0.01U	2	
C310		ECEA1AU101	E.CAPACITOR 10V 100U	1	
C311		ECUM1H103KBN	C.CAPACITOR CH 50V 0.01U	1	
C316		ECUM1E104ZFN	C.CAPACITOR CH 25V 0.1U	1	
C322		ECUM1E104ZFN	C.CAPACITOR CH 25V 0.1U	1	
C325		ECUM1E104ZFN	C.CAPACITOR CH 25V 0.1U	1	
C342		ECUM1H103KBN	C.CAPACITOR CH 50V 0.01U	1	
C343		ECUM1H150JCN	C.CAPACITOR CH 50V 15P	1	
C344		ECUM1H101JCN	C.CAPACITOR CH 50V 100P	1	
C345		ECUM1H100DCN	C.CAPACITOR CH 50V 10P	1	
C346		ECUM1H103KBN	C.CAPACITOR CH 50V 0.01U	1	
C347,48		ECEA1AU101	E.CAPACITOR 10V 100U	2	
C349		ECUM1H103KBN	C.CAPACITOR CH 50V 0.01U	1	
C350		ECUM1H820JCN	C.CAPACITOR CH 50V 82P	1	
C351,52		ECUM1H103KBN	C.CAPACITOR CH 50V 0.01U	2	
C353		ECUM1H680JCN	C.CAPACITOR CH 50V 68P	1	
C354,55		ECUM1H103KBN	C.CAPACITOR CH 50V 0.01U	2	
C356		ECUM1E104ZFN	C.CAPACITOR CH 25V 0.1U	1	
C357		ECEA1HU2R2	E.CAPACITOR 50V 2.2U	1	
C358		ECEA1AU101	E.CAPACITOR 10V 100U	1	
C359		ECUM1H103KBN	C.CAPACITOR CH 50V 0.01U	1	
C360		ECUM1H270JCN	C.CAPACITOR CH 50V 27P	1	
C363		ECUM1E104ZFN	C.CAPACITOR CH 25V 0.1U	1	
C373		ECEA1AU101	E.CAPACITOR 10V 100U	1	
C374		ECUM1H103KBN	C.CAPACITOR CH 50V 0.01U	1	
C375		ECEA1AU101	E.CAPACITOR 10V 100U	1	
C376-78		ECUM1H103KBN	C.CAPACITOR CH 50V 0.01U	3	
C380		ECUM1E104ZFN	C.CAPACITOR CH 25V 0.1U	1	
C381		ECUM1H103KBN	C.CAPACITOR CH 50V 0.01U	1	
C382		ECUM1E104ZFN	C.CAPACITOR CH 25V 0.1U	1	
C383		ECEA1AU101	E.CAPACITOR 10V 100U	1	
C386		ECUM1H050DCN	C.CAPACITOR CH 50V 50P	1	
C387		ECUM1H100DCN	C.CAPACITOR CH 50V 10P	1	
C389		ECUM1H331JCN	C.CAPACITOR CH 50V 330P	1	
C391		ECUM1H470JCN	C.CAPACITOR CH 50V 47P	1	
C392		ECUM1H103KBN	C.CAPACITOR CH 50V 0.01U	1	
C393		ECEA1AU101	E.CAPACITOR 10V 100U	1	
C394		ECUM1H103KBN	C.CAPACITOR CH 50V 0.01U	1	
C395		ECUM1E104ZFN	C.CAPACITOR CH 25V 0.1U	1	
C396,97		ECUM1H103KBN	C.CAPACITOR CH 50V 0.01U	2	
C398		ECUM1H180JCN	C.CAPACITOR CH 50V 18P	1	
C399		ECUM1H103KBN	C.CAPACITOR CH 50V 0.01U	1	
C400		ECUM1E104ZFN	C.CAPACITOR CH 25V 0.1U	1	
C401-03		ECUM1H103KBN	C.CAPACITOR CH 50V 0.01U	3	
C404		ECEA1AU101	E.CAPACITOR 10V 100U	1	
C405-07		ECUM1E104ZFN	C.CAPACITOR CH 25V 0.1U	3	
C408,09		ECUM1H270JCN	C.CAPACITOR CH 50V 27P	2	
C410		ECEA1AU471	E.CAPACITOR 10V 470U	1	
C411		ECUM1E104ZFN	C.CAPACITOR CH 25V 0.1U	1	

Ref.No.		Part No.	Part Name & Description	Pcs	Remarks
C412		ECUM1H221JCN	C.CAPACITOR CH 50V 220P	1	
C413		ECEA1AU101	E.CAPACITOR 10V 100U	1	
C414		ECUM1H470JCN	C.CAPACITOR CH 50V 47P	1	
C415		ECUM1H180JCN	C.CAPACITOR CH 50V 18P	1	
C416		ECUM1H181JCN	C.CAPACITOR CH 50V 180P	1	
C417,18		ECUM1E104ZFN	C.CAPACITOR CH 25V 0.1U	2	
C419		ECUM1H331JCN	C.CAPACITOR CH 50V 330P	1	
C420		ECUM1H220JCN	C.CAPACITOR CH 50V 22P	1	
C421		ECUM1H680JCN	C.CAPACITOR CH 50V 68P	1	
C422		ECUM1H330JCN	C.CAPACITOR CH 50V 33P	1	
C423		ECEA1AU101	E.CAPACITOR 10V 100U	1	
C424		ECEA1CU100	E.CAPACITOR 16V 10U	1	
C425		ECUM1H221JCN	C.CAPACITOR CH 50V 220P	1	
C426		VCM0044	M.CAPACITOR 130P	1	
C427		VCM0023	M.CAPACITOR 379P	1	
C428		ECUM1H680JCN	C.CAPACITOR CH 50V 68P	1	
C429		ECUM1H390JCN	C.CAPACITOR CH 50V 39P	1	
C430		ECUM1H331JCN	C.CAPACITOR CH 50V 330P	1	
C431		ECUM1H270JCN	C.CAPACITOR CH 50V 27P	1	
C432		ECEA0JU221	E.CAPACITOR 6.3V 220U	1	
C433		ECUM1H470JCN	C.CAPACITOR CH 50V 47P	1	
C434		ECUM1H560JCN	C.CAPACITOR CH 50V 56P	1	
C435		ECUM1H020CCN	C.CAPACITOR CH 50V 2P	1	
C436,37		ECUM1E104ZFN	C.CAPACITOR CH 25V 0.1U	2	
C440		ECUM1H470JCN	C.CAPACITOR CH 50V 47P	1	
C441		ECUM1H103KBN	C.CAPACITOR CH 50V 0.01U	1	
C442,43		ECEA1CU221	E.CAPACITOR 16V 220U	2	
C444,45		ECUM1H103KBN	C.CAPACITOR CH 50V 0.01U	2	
C446,47		VCM0027	M.CAPACITOR	2	
C448		ECEA1AU101	E.CAPACITOR 10V 100U	1	
C453		ECUM1E104ZFN	C.CAPACITOR CH 25V 0.1U	1	
C467		ECUM1E104ZFN	C.CAPACITOR CH 25V 0.1U	1	
C468		ECUM1H103KBN	C.CAPACITOR CH 50V 0.01U	1	
C470		ECUM1H330JCN	C.CAPACITOR CH 50V 33P	1	
C471		ECUM1H060DCN	C.CAPACITOR CH 50V 6P	1	
C472		VCC0037F062	C.CAPACITOR 50V 62P	1	
C473		ECUM1H182JN	C.CAPACITOR CH 50V 1800P	1	
C474		ECUM1E104ZFN	C.CAPACITOR CH 25V 0.1U	1	
C475		ECUM1H103KBN	C.CAPACITOR CH 50V 0.01U	1	
C476		ECEA1AU101	E.CAPACITOR 10V 100U	1	
C477		ECUM1H050DCN	C.CAPACITOR CH 50V 50P	1	
C478		ECEA1AU101	E.CAPACITOR 10V 100U	1	
C701,02		ECUM1H103KBN	C.CAPACITOR CH 50V 0.01U	2	
C703		ECEA1AU101	E.CAPACITOR 10V 100U	1	
C704,05		ECUM1H103KBN	C.CAPACITOR CH 50V 0.01U	2	
C706		ECUM1H330JCN	C.CAPACITOR CH 50V 33P	1	
C714		ECUM1H103KBN	C.CAPACITOR CH 50V 0.01U	1	
C725		ECUM1H180JCN	C.CAPACITOR CH 50V 18P	1	
C726		ECUM1H103KBN	C.CAPACITOR CH 50V 0.01U	1	
C727		ECUM1E104ZFN	C.CAPACITOR CH 25V 0.1U	1	
C728		ECUM1H220JCN	C.CAPACITOR CH 50V 22P	1	
C729		ECUM1H121JCN	C.CAPACITOR CH 50V 120P	1	
C730,31		ECUM1H103KBN	C.CAPACITOR CH 50V 0.01U	2	
C732		ECUM1H101JCN	C.CAPACITOR CH 50V 100P	1	
C733		ECEA1AU101	E.CAPACITOR 10V 100U	1	
C734		ECUM1H331JCN	C.CAPACITOR CH 50V 330P	1	
C735		ECEA1AU101	E.CAPACITOR 10V 100U	1	
C736		ECUM1H103KBN	C.CAPACITOR CH 50V 0.01U	1	
C737		ECUM1H101JCN	C.CAPACITOR CH 50V 100P	1	
C738		ECUM1H103KBN	C.CAPACITOR CH 50V 0.01U	1	
C740-42		ECUM1H103KBN	C.CAPACITOR CH 50V 0.01U	3	
C744		ECUM1E104ZFN	C.CAPACITOR CH 25V 0.1U	1	
C745		ECUM1H103KBN	C.CAPACITOR CH 50V 0.01U	1	
C746		ECUM1E104ZFN	C.CAPACITOR CH 25V 0.1U	1	
C747		ECEA1AU101	E.CAPACITOR 10V 100U	1	
C750		ECUM1H331JCN	C.CAPACITOR CH 50V 330P	1	
C751		ECUM1H101JCN	C.CAPACITOR CH 50V 100P	1	
C752		ECUM1H152JN	C.CAPACITOR CH 50V 1500P	1	
C753		ECUM1H220JCN	C.CAPACITOR CH 50V 22P	1	
C754		ECUM1H101JCN	C.CAPACITOR CH 50V 100P	1	
C755		ECUM1H220JCN	C.CAPACITOR CH 50V 22P	1	
C756		ECUM1H680JCN	C.CAPACITOR CH 50V 68P	1	
C757		ECUM1H150JCN	C.CAPACITOR CH 50V 15P	1	
C758		ECUM1H050DCN	C.CAPACITOR CH 50V 50P	1	
C759		ECUM1E104ZFN	C.CAPACITOR CH 25V 0.1U	1	

Ref.No.		Part No.	Part Name & Description	Pcs	Remarks
C760		ECUM1H100DCN	C.CAPACITOR CH 50V 10P	1	
C762		ECUM1H221JCN	C.CAPACITOR CH 50V 220P	1	
C763		ECUM1H101JCN	C.CAPACITOR CH 50V 100P	1	
C764-66		ECUM1H103KBN	C.CAPACITOR CH 50V 0.01U	3	
C767		ECEA1AU101	E.CAPACITOR 10V 100U	1	
C768,69		ECUM1H103KBN	C.CAPACITOR CH 50V 0.01U	2	
C770		ECUM1H220JCN	C.CAPACITOR CH 50V 22P	1	
C771		ECUM1H471JCN	C.CAPACITOR CH 50V 470P	1	
C772		ECUM1E104ZFN	C.CAPACITOR CH 25V 0.1U	1	
C773-75		ECUM1H103KBN	C.CAPACITOR CH 50V 0.01U	3	
C776		ECUM1E104ZFN	C.CAPACITOR CH 25V 0.1U	1	
C777		ECEA1AU101	E.CAPACITOR 10V 100U	1	
C778,79		ECUM1E104ZFN	C.CAPACITOR CH 25V 0.1U	2	
C780,81		ECUM1H390JCN	C.CAPACITOR CH 50V 39P	2	
C782		ECEA1AU471	E.CAPACITOR 10V 470U	1	
C783		ECUM1E104ZFN	C.CAPACITOR CH 25V 0.1U	1	
C784		ECUM1H221JCN	C.CAPACITOR CH 50V 220P	1	
C785		ECEA1AU101	E.CAPACITOR 10V 100U	1	
C786		ECUM1H121JCN	C.CAPACITOR CH 50V 120P	1	
C787		ECUM1H100DCN	C.CAPACITOR CH 50V 10P	1	
C788		ECUM1H331JCN	C.CAPACITOR CH 50V 330P	1	
C789,90		ECUM1E104ZFN	C.CAPACITOR CH 25V 0.1U	2	
C791		ECUM1H331JCN	C.CAPACITOR CH 50V 330P	1	
C792		ECUM1H220JCN	C.CAPACITOR CH 50V 22P	1	
C793		ECUM1H680JCN	C.CAPACITOR CH 50V 68P	1	
C794		ECUM1H330JCN	C.CAPACITOR CH 50V 33P	1	
C796		ECEA1CU100	E.CAPACITOR 16V 10U	1	
C797		VCM0023	M.CAPACITOR 379P	1	
C799		ECEA0JU221	E.CAPACITOR 6.3V 220U	1	
C800		ECUM1H470JCN	C.CAPACITOR CH 50V 47P	1	
C801		ECUM1H020CCN	C.CAPACITOR CH 50V 2P	1	
C802		ECUM1H121JCN	C.CAPACITOR CH 50V 120P	1	
C803,04		ECUM1E104ZFN	C.CAPACITOR CH 25V 0.1U	2	
C805		ECUM1H470JCN	C.CAPACITOR CH 50V 47P	1	
C808		ECEA1CU221	E.CAPACITOR 16V 220U	1	
C810		ECEA1CU221	E.CAPACITOR 16V 220U	1	
C811,12		ECUM1H103KBN	C.CAPACITOR CH 50V 0.01U	2	
C813,14		VCM0027	M.CAPACITOR	2	
C815		ECEA1AU101	E.CAPACITOR 10V 100U	1	
C821		ECUM1E104ZFN	C.CAPACITOR CH 25V 0.1U	1	
C836		ECUM1H470JCN	C.CAPACITOR CH 50V 47P	1	
C837		ECUM1H060DCN	C.CAPACITOR CH 50V 6P	1	
C838,39		ECUM1H100DCN	C.CAPACITOR CH 50V 10P	2	
C840		VCC0037F062	C.CAPACITOR 50V 62P	1	
C843		ECEA1AU101	E.CAPACITOR 10V 100U	1	
C844		ECUM1H103KBN	C.CAPACITOR CH 50V 0.01U	1	
C845		ECUM1H050DCN	C.CAPACITOR CH 50V 50P	1	
C846		ECEA1AU101	E.CAPACITOR 10V 100U	1	
D301		MA151WK	DIODE	1	
D303,04		MA151K	DIODE	2	
D305-07		MA151WK	DIODE	3	
D308,09		MA151WA	DIODE	2	
D701		MA151WK	DIODE	1	
D702-04		MA151K	DIODE	3	
D705,06		MA151WK	DIODE	2	
DL301		VLD0190	DELAY	1	
DL701		VLD0199	DELAY	1	
FL302		VLF0658	FILTER	1	
FL303		VLF0712	FILTER	1	
FL701		VLF0652	FILTER	1	
IC10		AN79N09	IC	1	
IC11,12		AN79M05F	IC	2	
IC13		AN78M05F	IC	1	

Ref.No.		Part No.	Part Name & Description	Pcs	Remarks
IC14		AN78N05	IC	1	
IC15		AN78N09	IC	1	
IC301		AN6308S	IC	1	
IC306		NJM1496M	IC	1	
IC307		UPD4053BG	IC	1	
IC309		RC082BM	IC	1	
IC310		AN6308S	IC	1	
IC311-15		10116D	IC	5	
IC316		SN74LS123NS	IC	1	
IC317		MC74HC00AF	IC	1	
IC319		NE5539D	IC	1	
IC326		RC082BM	IC	1	
IC327		AN6308S	IC	1	
IC701		AN6308S	IC	1	
IC705		NJM1496M	IC	1	
IC706		UPD4053BG	IC	1	
IC707		AN6308S	IC	1	
IC708-12		10116D	IC	5	
IC716		NE5539D	IC	1	
IC723		AN6308S	IC	1	
L301		VLQEL05S101K	COIL 100UH	1	
L302,03		VLQEL05S100J	COIL 10UH	2	
L304		VLQEL05S101K	COIL 100UH	1	
L308		VLQEL05S3R3J	COIL 3.3UH	1	
L309,10		VLQEL05S101K	COIL 100UH	2	
L311		VLQEL05S330J	COIL 33UH	1	
L312		VLQEL05S2R7J	COIL 2.7UH	1	
L313		VLQEL05S101K	COIL 100UH	1	
L314		VLQEL05S8R2J	COIL 8.2UH	1	
L316-18		VLQEL05S101K	COIL 100UH	3	
L320,21		VLQEL05S2R2J	COIL 2.2UH	2	
L322		VLQEL05S180J	COIL 18UH	1	
L323		VLQEL05S101K	COIL 100UH	1	
L324		VLQEL05S1R0J	COIL 1UH	1	
L325-27		VLQEL05S101K	COIL 100UH	3	
L328		VLQEL05S6R8J	COIL 6.8UH	1	
L329		VLQEL05S101K	COIL 100UH	1	
L330		VLQEL05S3R3J	COIL 3.3UH	1	
L333		VLQEL05S101K	COIL 100UH	1	
L334		VLQEL05S6R8K	COIL 6.8UH	1	
L345		VLQEL05S1R0J	COIL 1UH	1	
L346		VLQEL05SR47K	COIL 0.47UH	1	
L347		VLQEL05S101K	COIL 100UH	1	
L701		VLQEL05S101K	COIL 100UH	1	
L702		VLQEL05S150J	COIL 15UH	1	
L709		VLQEL05S4R7J	COIL 4.7UH	1	
L710		VLQEL05S101K	COIL 100UH	1	
L711		VLQEL05S560J	COIL 56UH	1	
L712		VLQEL05S101K	COIL 100UH	1	
L713		VLQEL05S3R9J	COIL 3.9UH	1	
L715		VLQEL05S101K	COIL 100UH	1	
L716		VLQEL05S471J	COIL 470UH	1	
L717		VLQEL05S330J	COIL 33UH	1	
L718		VLQEL05S3R3J	COIL 3.3UH	1	
L719		VLQEL05S8R2J	COIL 8.2UH	1	
L720		VLQEL05S6R8J	COIL 6.8UH	1	
L721		VLQEL05S4R7J	COIL 4.7UH	1	
L722		VLQEL05S2R7J	COIL 2.7UH	1	
L723		VLQEL05S5R6J	COIL 5.6UH	1	
L724		VLQEL05S101K	COIL 100UH	1	
L725		VLQEL05S1R5J	COIL 1.5UH	1	
L726-28		VLQEL05S101K	COIL 100UH	3	
L729		VLQEL05S150J	COIL 15UH	1	
L731		VLQEL05S101K	COIL 100UH	1	
L732		VLQEL05S6R8K	COIL 6.8UH	1	
L743		VLQEL05S181J	COIL 180UH	1	
L746		VLQEL05S101K	COIL 100UH	1	
Q301-04		2SC2295-B	TRANSISTOR CHIP	4	(B,C)
Q313,14		2SC2295-B	TRANSISTOR CHIP	2	(B,C)

Ref.No.		Part No.	Part Name & Description	Pcs	Remarks
Q315		2SA1022-B	TRANSISTOR CHIP	1	(B,C)
Q316		2SC2295-B	TRANSISTOR CHIP	1	(B,C)
Q317,18		2SA1022-B	TRANSISTOR CHIP	2	(B,C)
Q319		IMX4	TRANSISTOR	1	
Q320		UN2113	TRANSISTOR-RESISTOR	1	
Q321		2SC2295-B	TRANSISTOR CHIP	1	(B,C)
Q323		IMX4	TRANSISTOR	1	
Q324		2SC2295-B	TRANSISTOR CHIP	1	(B,C)
Q326		2SC2295-B	TRANSISTOR CHIP	1	(B,C)
Q327		2SA1022-B	TRANSISTOR CHIP	1	(B,C)
Q329-38		2SC2295-B	TRANSISTOR CHIP	10	(B,C)
Q339,40		UN2213	TRANSISTOR-RESISTOR	2	
Q341		2SA1462	TRANSISTOR	1	
Q342,43		2SC3757	TRANSISTOR	2	(Q,R)
Q344		2SC2295-B	TRANSISTOR CHIP	1	(B,C)
Q345		2SA1022-B	TRANSISTOR CHIP	1	(B,C)
Q346		2SC2480	TRANSISTOR	1	
Q347		2SA1462	TRANSISTOR	1	
Q348		2SC2480	TRANSISTOR	1	
Q349		2SA1226	TRANSISTOR	1	
Q356-61		UN2113	TRANSISTOR-RESISTOR	6	
Q376		2SA1462	TRANSISTOR	1	
Q377		2SA1226	TRANSISTOR	1	
Q378		2SC3757	TRANSISTOR	1	(Q,R)
Q379		2SC2480	TRANSISTOR	1	
Q382-84		2SC3757	TRANSISTOR	3	(Q,R)
Q385,86		2SC2295-B	TRANSISTOR CHIP	2	(B,C)
Q387		2SA1022-B	TRANSISTOR CHIP	1	(B,C)
Q388		2SD601-R	TRANSISTOR CHIP	1	(Q,R)
Q389		2SB709-R	TRANSISTOR CHIP	1	(Q,R)
Q390		2SA1226	TRANSISTOR	1	
Q391,92		2SD601-R	TRANSISTOR CHIP	2	(Q,R)
Q393		2SB709-R	TRANSISTOR CHIP	1	(Q,R)
Q701,02		2SA1022-B	TRANSISTOR CHIP	2	(B,C)
Q710,11		2SC2295-B	TRANSISTOR CHIP	2	(B,C)
Q712		2SA1022-B	TRANSISTOR CHIP	1	(B,C)
Q713		2SC2295-B	TRANSISTOR CHIP	1	(B,C)
Q714,15		2SA1022-B	TRANSISTOR CHIP	2	(B,C)
Q716		2SC2295-B	TRANSISTOR CHIP	1	(B,C)
Q718		2SC2295-B	TRANSISTOR CHIP	1	(B,C)
Q719		2SA1022-B	TRANSISTOR CHIP	1	(B,C)
Q721-30		2SC2295-B	TRANSISTOR CHIP	10	(B,C)
Q731		UN2213	TRANSISTOR-RESISTOR	1	
Q732		2SA1462	TRANSISTOR	1	
Q733		2SC2295-B	TRANSISTOR CHIP	1	(B,C)
Q734		2SA1022-B	TRANSISTOR CHIP	1	(B,C)
Q735		2SC2480	TRANSISTOR	1	
Q736		2SA1462	TRANSISTOR	1	
Q737		2SC2480	TRANSISTOR	1	
Q738		2SA1226	TRANSISTOR	1	
Q754		2SA1462	TRANSISTOR	1	
Q755		2SA1226	TRANSISTOR	1	
Q756		2SC3757	TRANSISTOR	1	(Q,R)
Q757		2SC2480	TRANSISTOR	1	
Q758-60		2SC3757	TRANSISTOR	3	(Q,R)
Q761		2SC2295-B	TRANSISTOR CHIP	1	(B,C)
Q762		2SA1022-B	TRANSISTOR CHIP	1	(B,C)
Q763		2SD601-R	TRANSISTOR CHIP	1	(Q,R)
Q764		2SB709-R	TRANSISTOR CHIP	1	(Q,R)
Q765		2SA1226	TRANSISTOR	1	
Q766		2SD601-R	TRANSISTOR CHIP	1	(Q,R)
			RESISTORS		
R20		ERJ6GEYJ472	M.RESISTOR CH 1/10W 4.7K	1	
R101		ERJ6GEYJ470	M.RESISTOR CH 1/10W 47	1	
R301		ERJ6GEYJ470	M.RESISTOR CH 1/10W 47	1	
R302		ERJ6GEYJ681	M.RESISTOR CH 1/10W 680	1	
R303		ERJ6GEYJ102	M.RESISTOR CH 1/10W 1K	1	
R304		ERJ6GEYJ332	M.RESISTOR CH 1/10W 3.3K	1	
R305		ERJ6GEYJ470	M.RESISTOR CH 1/10W 47	1	
R306		ERJ6GEYJ681	M.RESISTOR CH 1/10W 680	1	
R307		ERJ6GEYJ102	M.RESISTOR CH 1/10W 1K	1	
R308		ERJ6GEYJ332	M.RESISTOR CH 1/10W 3.3K	1	

Ref.No.		Part No.	Part Name & Description	Pcs	Remarks
R309		ERJ6GEYJ222	M.RESISTOR CH 1/10W 2.2K	1	
R310		ERJ6GEYJ470	M.RESISTOR CH 1/10W 47	1	
R332		ERJ6GEYJ152	M.RESISTOR CH 1/10W 1.5K	1	
R333,34		ERJ6GEYG471	M.RESISTOR CH 1/10W 470	2	
R335,36		ERJ6GEYJ470	M.RESISTOR CH 1/10W 47	2	
R337,38		ERJ6GEYJ222	M.RESISTOR CH 1/10W 2.2K	2	
R339,40		VRE0034E43A	M.RESISTOR 1/10W	2	
R341		ERJ6GEYJ470	M.RESISTOR CH 1/10W 47	1	
R342		VRE0034E43A	M.RESISTOR 1/10W	1	
R343		VRE0034E89A	M.RESISTOR CH 1/10W 825	1	
R344		ERJ6GEYJ470	M.RESISTOR CH 1/10W 47	1	
R345		ERJ6GEYJ222	M.RESISTOR CH 1/10W 2.2K	1	
R346		ERJ6GEYJ102	M.RESISTOR CH 1/10W 1K	1	
R347		VRE0034E51A	M.RESISTOR CH 1/10W 357	1	
R348		ERJ6GEYJ153	M.RESISTOR CH 1/10W 15K	1	
R349		ERJ6GEYG223	M.RESISTOR CH 1/10W 22K	1	
R350,51		ERJ6GEYJ220	M.RESISTOR CH 1/10W 22	2	
R352		ERJ6GEYJ470	M.RESISTOR CH 1/10W 47	1	
R353		ERJ6GEYJ152	M.RESISTOR CH 1/10W 1.5K	1	
R354		ERJ6GEYG471	M.RESISTOR CH 1/10W 470	1	
R355		ERJ6GEYJ102	M.RESISTOR CH 1/10W 1K	1	
R356		ERJ6GEYJ221	M.RESISTOR CH 1/10W 220	1	
R357		ERJ6GEYJ222	M.RESISTOR CH 1/10W 2.2K	1	
R358		ERJ6GEYJ101	M.RESISTOR CH 1/10W 100	1	
R359		ERJ6GEYJ472	M.RESISTOR CH 1/10W 4.7K	1	
R360,61		ERJ6GEYJ473	M.RESISTOR CH 1/10W 47K	2	
R362		ERJ6GEYJ472	M.RESISTOR CH 1/10W 4.7K	1	
R363,64		ERJ6GEYG223	M.RESISTOR CH 1/10W 22K	2	
R365		ERJ6GEYJ473	M.RESISTOR CH 1/10W 47K	1	
R366		ERJ6GEYG223	M.RESISTOR CH 1/10W 22K	1	
R367		ERJ6GEYJ683	M.RESISTOR CH 1/10W 68K	1	
R368		ERJ6GEYJ472	M.RESISTOR CH 1/10W 4.7K	1	
R369		ERJ6GEYJ103	M.RESISTOR CH 1/10W 10K	1	
R370		ERJ6GEYJ683	M.RESISTOR CH 1/10W 68K	1	
R371		ERJ6GEYJ682	M.RESISTOR CH 1/10W 6.8K	1	
R372		ERJ6GEYJ470	M.RESISTOR CH 1/10W 47	1	
R373		ERJ6GEYJ681	M.RESISTOR CH 1/10W 680	1	
R374		ERJ6GEYG151	M.RESISTOR CH 1/10W 150	1	
R375		ERJ6GEYJ470	M.RESISTOR CH 1/10W 47	1	
R386		ERJ6GEYJ103	M.RESISTOR CH 1/10W 10K	1	
R387,88		ERJ6GEYJ473	M.RESISTOR CH 1/10W 47K	2	
R389		ERJ6GEYJ103	M.RESISTOR CH 1/10W 10K	1	
R390		ERJ6GEYJ472	M.RESISTOR CH 1/10W 4.7K	1	
R391		ERJ6GEYJ474	M.RESISTOR CH 1/10W 470K	1	
R392		ERJ6GEYJ473	M.RESISTOR CH 1/10W 47K	1	
R393,94		ERJ6GEYG471	M.RESISTOR CH 1/10W 470	2	
R395		ERJ6GEYJ101	M.RESISTOR CH 1/10W 100	1	
R396		ERJ6GEYJ222	M.RESISTOR CH 1/10W 2.2K	1	
R397		ERJ6GEYJ470	M.RESISTOR CH 1/10W 47	1	
R398		ERJ6GEYJ152	M.RESISTOR CH 1/10W 1.5K	1	
R399,00		ERJ6GEYG301	M.RESISTOR CH 1/10W 300	2	
R401		ERJ6GEYJ470	M.RESISTOR CH 1/10W 47	1	
R402		ERJ6GEYJ102	M.RESISTOR CH 1/10W 1K	1	
R403		ERJ6GEYJ681	M.RESISTOR CH 1/10W 680	1	
R404		ERJ6GEYJ102	M.RESISTOR CH 1/10W 1K	1	
R405		ERJ6GEYJ152	M.RESISTOR CH 1/10W 1.5K	1	
R406		ERJ6GEYJ470	M.RESISTOR CH 1/10W 47	1	
R407		ERJ6GEYJ221	M.RESISTOR CH 1/10W 220	1	
R408		ERJ6GEYJ222	M.RESISTOR CH 1/10W 2.2K	1	
R409		ERJ6GEYJ470	M.RESISTOR CH 1/10W 47	1	
R410		ERJ6GEYJ152	M.RESISTOR CH 1/10W 1.5K	1	
R411		ERJ6GEYJ331	M.RESISTOR CH 1/10W 330	1	
R412		VRE0034E51A	M.RESISTOR CH 1/10W 357	1	
R413		ERJ6GEYJ470	M.RESISTOR CH 1/10W 47	1	
R414		ERJ6GEYJ222	M.RESISTOR CH 1/10W 2.2K	1	
R415		ERJ6GEYJ470	M.RESISTOR CH 1/10W 47	1	
R426		ERJ6GEYJ470	M.RESISTOR CH 1/10W 47	1	
R427-34		ERJ6GEYJ102	M.RESISTOR CH 1/10W 1K	8	
R435,36		ERJ6GEYJ332	M.RESISTOR CH 1/10W 3.3K	2	
R437		ERJ6GEYJ101	M.RESISTOR CH 1/10W 100	1	
R438,39		ERJ6GEYG471	M.RESISTOR CH 1/10W 470	2	
R440		ERJ6GEYJ470	M.RESISTOR CH 1/10W 47	1	
R441,42		ERJ6GEYJ681	M.RESISTOR CH 1/10W 680	2	
R443,44		ERJ6GEYJ101	M.RESISTOR CH 1/10W 100	2	
R445		ERJ6GEYJ470	M.RESISTOR CH 1/10W 47	1	

Ref.No.		Part No.	Part Name & Description	Pcs	Remarks
R446		ERJ6GEYG151	M.RESISTOR CH 1/10W 150	1	
R447,48		ERJ6GEYJ222	M.RESISTOR CH 1/10W 2.2K	2	
R449		ERJ6GEYJ470	M.RESISTOR CH 1/10W 47	1	
R450,51		ERJ6GEYJ222	M.RESISTOR CH 1/10W 2.2K	2	
R452,53		ERJ6GEYJ470	M.RESISTOR CH 1/10W 47	2	
R454-65		ERJ6GEYJ102	M.RESISTOR CH 1/10W 1K	12	
R466		ERJ6GEYJ683	M.RESISTOR CH 1/10W 68K	1	
R467,68		ERJ6GEYJ103	M.RESISTOR CH 1/10W 10K	2	
R469,70		ERJ6GEYJ680	M.RESISTOR CH 1/10W 68	2	
R471,72		ERJ6GEYJ332	M.RESISTOR CH 1/10W 3.3K	2	
R473		ERJ6GEYJ101	M.RESISTOR CH 1/10W 100	1	
R474		ERDS2TJ222	C.RESISTOR 1/4W 2.2K	1	
R475		ERJ6GEYJ102	M.RESISTOR CH 1/10W 1K	1	
R477		ERJ6GEYG471	M.RESISTOR CH 1/10W 470	1	
R478		ERJ6GEYJ102	M.RESISTOR CH 1/10W 1K	1	
R479		ERJ6GEYJ222	M.RESISTOR CH 1/10W 2.2K	1	
R480,81		ERJ6GEYG471	M.RESISTOR CH 1/10W 470	2	
R482		ERJ6GEYJ470	M.RESISTOR CH 1/10W 47	1	
R483,84		ERJ6GEYJ333	M.RESISTOR CH 1/10W 33K	2	
R485,86		ERJ6GEYJ102	M.RESISTOR CH 1/10W 1K	2	
R487		ERJ6GEYJ222	M.RESISTOR CH 1/10W 2.2K	1	
R488		ERJ6GEYJ221	M.RESISTOR CH 1/10W 220	1	
R489		ERJ6GEYJ392	M.RESISTOR CH 1/10W 3.9K	1	
R490		ERJ6GEYJ470	M.RESISTOR CH 1/10W 47	1	
R491		ERJ6GEYG223	M.RESISTOR CH 1/10W 22K	1	
R492		ERJ6GEYG471	M.RESISTOR CH 1/10W 470	1	
R493		ERJ6GEYJ152	M.RESISTOR CH 1/10W 1.5K	1	
R494,95		ERJ6GEYJ101	M.RESISTOR CH 1/10W 100	2	
R496		ERJ6GEYJ222	M.RESISTOR CH 1/10W 2.2K	1	
R497		ERJ6GEYJ102	M.RESISTOR CH 1/10W 1K	1	
R498		ERJ6GEYJ101	M.RESISTOR CH 1/10W 100	1	
R499		ERJ6GEYJ332	M.RESISTOR CH 1/10W 3.3K	1	
R500		ERJ6GEYG223	M.RESISTOR CH 1/10W 22K	1	
R501		ERJ6GEYJ332	M.RESISTOR CH 1/10W 3.3K	1	
R502		ERJ6GEYJ472	M.RESISTOR CH 1/10W 4.7K	1	
R503		ERJ6GEYJ103	M.RESISTOR CH 1/10W 10K	1	
R504		ERJ6GEYJ184	M.RESISTOR CH 1/10W 180K	1	
R505,06		ERJ6GEYJ473	M.RESISTOR CH 1/10W 47K	2	
R508		ERJ6GEYG471	M.RESISTOR CH 1/10W 470	1	
R509		ERJ6GEYJ221	M.RESISTOR CH 1/10W 220	1	
R510		ERJ6GEYJ392	M.RESISTOR CH 1/10W 3.9K	1	
R511		VRE0034E27B	M.RESISTOR CH 1/10W 1.87K	1	
R512		VRE0034E751	M.RESISTOR CH 1/10W 750	1	
R513		ERJ6GEYJ332	M.RESISTOR CH 1/10W 3.3K	1	
R514		ERJ6GEYJ102	M.RESISTOR CH 1/10W 1K	1	
R515		ERJ6GEYJ682	M.RESISTOR CH 1/10W 6.8K	1	
R516		ERJ6GEYG301	M.RESISTOR CH 1/10W 300	1	
R518		ERJ6GEYG431	M.RESISTOR CH 1/10W 430	1	
R519		ERJ6GEYJ332	M.RESISTOR CH 1/10W 3.3K	1	
R520		ERJ6GEYJ101	M.RESISTOR CH 1/10W 100	1	
R521		ERJ6GEYG151	M.RESISTOR CH 1/10W 150	1	
R522		VRE0034E26A	M.RESISTOR CH 1/10W 182	1	
R523		VRE0034E51A	M.RESISTOR CH 1/10W 357	1	
R524		VRE0034E89A	M.RESISTOR CH 1/10W 825	1	
R525		ERJ6GEYG331	M.RESISTOR CH 1/10W 330	1	
R526,27		ERJ6GEYJ470	M.RESISTOR CH 1/10W 47	2	
R528		ERJ6GEYJ101	M.RESISTOR CH 1/10W 100	1	
R529		ERJ6GEYJ102	M.RESISTOR CH 1/10W 1K	1	
R530		ERJ6GEYJ681	M.RESISTOR CH 1/10W 680	1	
R531,32		ERJ6GEYJ273	M.RESISTOR CH 1/10W 27K	2	
R533,34		ERJ6GEYJ183	M.RESISTOR CH 1/10W 18K	2	
R535,36		ERJ6GEYJ221	M.RESISTOR CH 1/10W 220	2	
R537		ERJ6GEYG223	M.RESISTOR CH 1/10W 22K	1	
R538		ERJ6GEYJ470	M.RESISTOR CH 1/10W 47	1	
R539		ERJ6GEYG301	M.RESISTOR CH 1/10W 300	1	
R540		VRE0034E24A	M.RESISTOR 1/10W	1	
R541		VRE0034E89A	M.RESISTOR CH 1/10W 825	1	
R542		VRE0034E51A	M.RESISTOR CH 1/10W 357	1	
R543		VRE0034E89A	M.RESISTOR CH 1/10W 825	1	
R544		ERJ6GEYJ392	M.RESISTOR CH 1/10W 3.9K	1	
R545		ERJ6GEYJ222	M.RESISTOR CH 1/10W 2.2K	1	
R546		ERJ6GEYJ470	M.RESISTOR CH 1/10W 47	1	
R561-63		ERJ6GEYJ473	M.RESISTOR CH 1/10W 47K	3	
R564		ERJ6GEYJ222	M.RESISTOR CH 1/10W 2.2K	1	
R565		ERJ6GEYG223	M.RESISTOR CH 1/10W 22K	1	

Ref.No.		Part No.	Part Name & Description	Pcs	Remarks
R566		ERJ6GEYJ222	M.RESISTOR CH 1/10W 2.2K	1	
R567		ERJ6GEYG223	M.RESISTOR CH 1/10W 22K	1	
R620		ERJ6GEYJ101	M.RESISTOR CH 1/10W 100	1	
R624-26		ERJ6GEYJ103	M.RESISTOR CH 1/10W 10K	3	
R627		ERJ6GEYJ472	M.RESISTOR CH 1/10W 4.7K	1	
R628		ERJ6GEYG223	M.RESISTOR CH 1/10W 22K	1	
R629		ERJ6GEYJ472	M.RESISTOR CH 1/10W 4.7K	1	
R630,31		ERJ6GEYJ101	M.RESISTOR CH 1/10W 100	2	
R636		ERJ6GEYJ470	M.RESISTOR CH 1/10W 47	1	
R637		ERJ6GEYJ102	M.RESISTOR CH 1/10W 1K	1	
R639,40		ERJ6GEYJ331	M.RESISTOR CH 1/10W 330	2	
R644,45		ERJ6GEYJ470	M.RESISTOR CH 1/10W 47	2	
R646		ERJ6GEYJ682	M.RESISTOR CH 1/10W 6.8K	1	
R647,48		ERJ6GEYJ221	M.RESISTOR CH 1/10W 220	2	
R649		ERJ6GEYJ682	M.RESISTOR CH 1/10W 6.8K	1	
R650-53		ERJ6GEYJ101	M.RESISTOR CH 1/10W 100	4	
R656		ERJ6GEYJ470	M.RESISTOR CH 1/10W 47	1	
R660		VRE0034E51A	M.RESISTOR CH 1/10W 357	1	
R663		ERJ6GEYJ153	M.RESISTOR CH 1/10W 15K	1	
R664		ERJ6GEYK5R6	M.RESISTOR CH 1/10W 5.6	1	
R665		ERJ6GEYJ100	M.RESISTOR CH 1/10W 10	1	
R668		ERJ6GEYJ472	M.RESISTOR CH 1/10W 4.7K	1	
R669		ERJ6GEYJ102	M.RESISTOR CH 1/10W 1K	1	
R670		ERJ6GEYJ681	M.RESISTOR CH 1/10W 680	1	
R671		ERJ6GEYJ472	M.RESISTOR CH 1/10W 4.7K	1	
R672		ERJ6GEYJ103	M.RESISTOR CH 1/10W 10K	1	
R673		ERJ6GEYJ470	M.RESISTOR CH 1/10W 47	1	
R674		ERJ6GEYJ222	M.RESISTOR CH 1/10W 2.2K	1	
R675,76		ERJ6GEYJ472	M.RESISTOR CH 1/10W 4.7K	2	
R677		ERJ6GEYJ681	M.RESISTOR CH 1/10W 680	1	
R678		ERJ6GEYJ472	M.RESISTOR CH 1/10W 4.7K	1	
R679		ERJ6GEYJ103	M.RESISTOR CH 1/10W 10K	1	
R680		ERJ6GEYJ470	M.RESISTOR CH 1/10W 47	1	
R681		ERJ6GEYJ104	M.RESISTOR CH 1/10W 100K	1	
R682		ERJ6GEYJ333	M.RESISTOR CH 1/10W 33K	1	
R701		ERJ6GEYJ470	M.RESISTOR CH 1/10W 47	1	
R702		ERJ6GEYJ102	M.RESISTOR CH 1/10W 1K	1	
R703		VRE0034E89A	M.RESISTOR CH 1/10W 825	1	
R704		VRE0034E51A	M.RESISTOR CH 1/10W 357	1	
R705		ERJ6GEYJ681	M.RESISTOR CH 1/10W 680	1	
R711,12		ERJ6GEYJ470	M.RESISTOR CH 1/10W 47	2	
R723,24		ERJ6GEYJ101	M.RESISTOR CH 1/10W 100	2	
R725		ERJ6GEYJ102	M.RESISTOR CH 1/10W 1K	1	
R726		ERJ6GEYJ470	M.RESISTOR CH 1/10W 47	1	
R727		ERJ6GEYG471	M.RESISTOR CH 1/10W 470	1	
R728,29		ERJ6GEYJ470	M.RESISTOR CH 1/10W 47	2	
R730		ERJ6GEYG471	M.RESISTOR CH 1/10W 470	1	
R731		ERJ6GEYJ222	M.RESISTOR CH 1/10W 2.2K	1	
R732,33		ERJ6GEYG681	M.RESISTOR CH 1/10W 680	2	
R734		ERJ6GEYJ222	M.RESISTOR CH 1/10W 2.2K	1	
R735		ERJ6GEYJ470	M.RESISTOR CH 1/10W 47	1	
R736		VRE0034E43A	M.RESISTOR 1/10W	1	
R737		ERJ6GEYJ332	M.RESISTOR CH 1/10W 3.3K	1	
R738		VRE0034E89A	M.RESISTOR CH 1/10W 825	1	
R739		ERJ6GEYJ470	M.RESISTOR CH 1/10W 47	1	
R740		ERJ6GEYJ222	M.RESISTOR CH 1/10W 2.2K	1	
R741		ERJ6GEYJ182	M.RESISTOR CH 1/10W 1.8K	1	
R742		VRE0034E51A	M.RESISTOR CH 1/10W 357	1	
R743		ERJ6GEYJ153	M.RESISTOR CH 1/10W 15K	1	
R744		ERJ6GEYJ473	M.RESISTOR CH 1/10W 47K	1	
R745,46		ERJ6GEYJ220	M.RESISTOR CH 1/10W 22	2	
R747		ERJ6GEYJ470	M.RESISTOR CH 1/10W 47	1	
R748		ERJ6GEYJ152	M.RESISTOR CH 1/10W 1.5K	1	
R749		VRE0034E51A	M.RESISTOR CH 1/10W 357	1	
R750		ERJ6GEYJ102	M.RESISTOR CH 1/10W 1K	1	
R751		ERJ6GEYJ271	M.RESISTOR CH 1/10W 270	1	
R752		ERJ6GEYJ222	M.RESISTOR CH 1/10W 2.2K	1	
R753		ERJ6GEYJ472	M.RESISTOR CH 1/10W 4.7K	1	
R754		ERJ6GEYJ103	M.RESISTOR CH 1/10W 10K	1	
R755		ERJ6GEYJ472	M.RESISTOR CH 1/10W 4.7K	1	
R756		ERJ6GEYJ682	M.RESISTOR CH 1/10W 6.8K	1	
R757		ERJ6GEYG471	M.RESISTOR CH 1/10W 470	1	
R758		ERJ6GEYJ101	M.RESISTOR CH 1/10W 100	1	
R759		ERJ6GEYJ222	M.RESISTOR CH 1/10W 2.2K	1	
R760		ERJ6GEYJ470	M.RESISTOR CH 1/10W 47	1	

Ref.No.		Part No.	Part Name & Description	Pcs	Remarks
R761		ERJ6GEYJ152	M.RESISTOR CH 1/10W 1.5K	1	
R762,63		ERJ6GEYG391	M.RESISTOR CH 1/10W 390	2	
R764		ERJ6GEYJ470	M.RESISTOR CH 1/10W 47	1	
R765		ERJ6GEYJ102	M.RESISTOR CH 1/10W 1K	1	
R766		ERJ6GEYJ681	M.RESISTOR CH 1/10W 680	1	
R767		ERJ6GEYJ102	M.RESISTOR CH 1/10W 1K	1	
R768		ERJ6GEYJ152	M.RESISTOR CH 1/10W 1.5K	1	
R769		ERJ6GEYJ470	M.RESISTOR CH 1/10W 47	1	
R770		ERJ6GEYJ221	M.RESISTOR CH 1/10W 220	1	
R771		ERJ6GEYJ222	M.RESISTOR CH 1/10W 2.2K	1	
R772		ERJ6GEYJ470	M.RESISTOR CH 1/10W 47	1	
R773		ERJ6GEYJ152	M.RESISTOR CH 1/10W 1.5K	1	
R774		ERJ6GEYJ331	M.RESISTOR CH 1/10W 330	1	
R775		VRE0034E51A	M.RESISTOR CH 1/10W 357	1	
R776		ERJ6GEYJ470	M.RESISTOR CH 1/10W 47	1	
R777		ERJ6GEYJ222	M.RESISTOR CH 1/10W 2.2K	1	
R778		ERJ6GEYJ470	M.RESISTOR CH 1/10W 47	1	
R789		ERJ6GEYJ470	M.RESISTOR CH 1/10W 47	1	
R790-97		ERJ6GEYJ102	M.RESISTOR CH 1/10W 1K	8	
R798,99		ERJ6GEYJ332	M.RESISTOR CH 1/10W 3.3K	2	
R800		ERJ6GEYJ101	M.RESISTOR CH 1/10W 100	1	
R801,02		ERJ6GEYG471	M.RESISTOR CH 1/10W 470	2	
R803		ERJ6GEYJ470	M.RESISTOR CH 1/10W 47	1	
R804,05		ERJ6GEYJ681	M.RESISTOR CH 1/10W 680	2	
R806,07		ERJ6GEYJ101	M.RESISTOR CH 1/10W 100	2	
R808		ERJ6GEYJ470	M.RESISTOR CH 1/10W 47	1	
R809		ERJ6GEYG151	M.RESISTOR CH 1/10W 150	1	
R810,11		ERJ6GEYJ222	M.RESISTOR CH 1/10W 2.2K	2	
R812		ERJ6GEYJ470	M.RESISTOR CH 1/10W 47	1	
R813,14		ERJ6GEYJ222	M.RESISTOR CH 1/10W 2.2K	2	
R815,16		ERJ6GEYJ470	M.RESISTOR CH 1/10W 47	2	
R817-28		ERJ6GEYJ102	M.RESISTOR CH 1/10W 1K	12	
R829		ERJ6GEYJ683	M.RESISTOR CH 1/10W 68K	1	
R830,31		ERJ6GEYJ103	M.RESISTOR CH 1/10W 10K	2	
R832,33		ERJ6GEYJ150	M.RESISTOR CH 1/10W 15	2	
R834,35		ERJ6GEYJ332	M.RESISTOR CH 1/10W 3.3K	2	
R836		ERJ6GEYJ101	M.RESISTOR CH 1/10W 100	1	
R837		ERDS2TJ222	C.RESISTOR 1/4W 2.2K	1	
R838-40		ERJ6GEYJ102	M.RESISTOR CH 1/10W 1K	3	
R842		ERJ6GEYJ222	M.RESISTOR CH 1/10W 2.2K	1	
R843,44		ERJ6GEYG471	M.RESISTOR CH 1/10W 470	2	
R845		ERJ6GEYJ470	M.RESISTOR CH 1/10W 47	1	
R846,47		ERJ6GEYJ333	M.RESISTOR CH 1/10W 33K	2	
R848,49		ERJ6GEYJ102	M.RESISTOR CH 1/10W 1K	2	
R850		ERJ6GEYJ222	M.RESISTOR CH 1/10W 2.2K	1	
R851		ERJ6GEYJ221	M.RESISTOR CH 1/10W 220	1	
R852		ERJ6GEYJ392	M.RESISTOR CH 1/10W 3.9K	1	
R853		ERJ6GEYJ470	M.RESISTOR CH 1/10W 47	1	
R854		ERJ6GEYG471	M.RESISTOR CH 1/10W 470	1	
R855		ERJ6GEYJ152	M.RESISTOR CH 1/10W 1.5K	1	
R856,57		ERJ6GEYJ101	M.RESISTOR CH 1/10W 100	2	
R858		ERJ6GEYJ222	M.RESISTOR CH 1/10W 2.2K	1	
R859		ERJ6GEYJ102	M.RESISTOR CH 1/10W 1K	1	
R860		ERJ6GEYJ101	M.RESISTOR CH 1/10W 100	1	
R861		ERJ6GEYJ332	M.RESISTOR CH 1/10W 3.3K	1	
R862		ERJ6GEYG223	M.RESISTOR CH 1/10W 22K	1	
R863		ERJ6GEYJ332	M.RESISTOR CH 1/10W 3.3K	1	
R864		ERJ6GEYJ472	M.RESISTOR CH 1/10W 4.7K	1	
R865		ERJ6GEYJ103	M.RESISTOR CH 1/10W 10K	1	
R866		ERJ6GEYJ184	M.RESISTOR CH 1/10W 180K	1	
R867		ERJ6GEYJ473	M.RESISTOR CH 1/10W 47K	1	
R868		ERJ6GEYG471	M.RESISTOR CH 1/10W 470	1	
R870		ERJ6GEYG471	M.RESISTOR CH 1/10W 470	1	
R871		ERJ6GEYJ221	M.RESISTOR CH 1/10W 220	1	
R872		ERJ6GEYJ392	M.RESISTOR CH 1/10W 3.9K	1	
R873		VRE0034E27B	M.RESISTOR CH 1/10W 1.87K	1	
R874		VRE0034E751	M.RESISTOR CH 1/10W 750	1	
R875		ERJ6GEYJ332	M.RESISTOR CH 1/10W 3.3K	1	
R876		ERJ6GEYJ102	M.RESISTOR CH 1/10W 1K	1	
R878		ERJ6GEYG301	M.RESISTOR CH 1/10W 300	1	
R879		ERJ6GEYG431	M.RESISTOR CH 1/10W 430	1	
R880		ERJ6GEYJ332	M.RESISTOR CH 1/10W 3.3K	1	
R881		ERJ6GEYJ101	M.RESISTOR CH 1/10W 100	1	
R882		ERJ6GEYG151	M.RESISTOR CH 1/10W 150	1	
R883		VRE0034E26A	M.RESISTOR CH 1/10W 182	1	

Ref.No.		Part No.	Part Name & Description	Pcs	Remarks
R884		ERJ6GEYJ391	M.RESISTOR CH 1/10W 390	1	
R885		VRE0034E89A	M.RESISTOR CH 1/10W 825	1	
R886,87		ERJ6GEYJ470	M.RESISTOR CH 1/10W 47	2	
R888		VRE0034E51A	M.RESISTOR CH 1/10W 357	1	
R889		ERJ6GEYJ681	M.RESISTOR CH 1/10W 680	1	
R890		ERJ6GEYJ273	M.RESISTOR CH 1/10W 27K	1	
R891		ERJ6GEYJ183	M.RESISTOR CH 1/10W 18K	1	
R892		ERJ6GEYJ221	M.RESISTOR CH 1/10W 220	1	
R893		ERJ6GEYJ273	M.RESISTOR CH 1/10W 27K	1	
R894		ERJ6GEYJ183	M.RESISTOR CH 1/10W 18K	1	
R895		ERJ6GEYJ221	M.RESISTOR CH 1/10W 220	1	
R896		ERJ6GEYG223	M.RESISTOR CH 1/10W 22K	1	
R897		ERJ6GEYJ470	M.RESISTOR CH 1/10W 47	1	
R898		VRE0034E24A	M.RESISTOR 1/10W	1	
R899		VRE0034E89A	M.RESISTOR CH 1/10W 825	1	
R900		ERJ6GEYG301	M.RESISTOR CH 1/10W 300	1	
R901		VRE0034E51A	M.RESISTOR CH 1/10W 357	1	
R902		VRE0034E89A	M.RESISTOR CH 1/10W 825	1	
R903		ERJ6GEYJ392	M.RESISTOR CH 1/10W 3.9K	1	
R904		ERJ6GEYJ470	M.RESISTOR CH 1/10W 47	1	
R905		ERJ6GEYJ222	M.RESISTOR CH 1/10W 2.2K	1	
R964		ERJ6GEYJ101	M.RESISTOR CH 1/10W 100	1	
R965		ERJ6GEYJ102	M.RESISTOR CH 1/10W 1K	1	
R966-68		ERJ6GEYJ103	M.RESISTOR CH 1/10W 10K	3	
R969,70		ERJ6GEYJ472	M.RESISTOR CH 1/10W 4.7K	2	
R971		ERJ6GEYG223	M.RESISTOR CH 1/10W 22K	1	
R975,76		ERJ6GEYJ470	M.RESISTOR CH 1/10W 47	2	
R977		ERJ6GEYJ682	M.RESISTOR CH 1/10W 6.8K	1	
R978,79		ERJ6GEYJ221	M.RESISTOR CH 1/10W 220	2	
R980		ERJ6GEYJ682	M.RESISTOR CH 1/10W 6.8K	1	
R981,82		ERJ6GEYJ101	M.RESISTOR CH 1/10W 100	2	
R985		ERJ6GEYJ470	M.RESISTOR CH 1/10W 47	1	
R986,87		VRE0034E51A	M.RESISTOR CH 1/10W 357	2	
R989		ERJ6GEYJ472	M.RESISTOR CH 1/10W 4.7K	1	
R991		ERJ6GEY0R00	M.RESISTOR CH 1/10W 0	1	
R993		VRE0034E51A	M.RESISTOR CH 1/10W 357	1	
R996		ERJ6GEYJ220	M.RESISTOR CH 1/10W 22	1	
R1001		ERJ6GEYJ102	M.RESISTOR CH 1/10W 1K	1	
R1002		ERJ6GEYJ472	M.RESISTOR CH 1/10W 4.7K	1	
R1003		ERJ6GEYJ681	M.RESISTOR CH 1/10W 680	1	
R1004		ERJ6GEYJ472	M.RESISTOR CH 1/10W 4.7K	1	
R1005		ERJ6GEYJ103	M.RESISTOR CH 1/10W 10K	1	
R1006		ERJ6GEYJ470	M.RESISTOR CH 1/10W 47	1	
R1007		ERJ6GEYJ222	M.RESISTOR CH 1/10W 2.2K	1	
R1008,09		ERJ6GEYJ472	M.RESISTOR CH 1/10W 4.7K	2	
SW304		VSS0126	SWITCH	1	
SW704		VSS0126	SWITCH	1	
TP301,02		VJR0646	TEST POINT	2	
TP306-11		VJR0646	TEST POINT	6	
TP315		VJR0646	TEST POINT	1	
TP701-08		VJR0646	TEST POINT	8	
TPG301-03		VJR0646	TEST POINT	3	
TPG701-03		VJR0646	TEST POINT	3	
VC301		ECV1ZW10X53T	TRIMMER 10P	1	
VC701		ECV1ZW20X53T	V.CAPACITOR 20P	1	
VL301,02		EIR7QF016B	COIL	2	
VL701		EIR7QF016B	COIL	1	
VL702		EIR7QF015B	COIL	1	
VR301		VRV0109B501	V.RESISTOR 500	1	
VR302		VRV0109B102	V.RESISTOR 1K	1	

Ref.No.		Part No.	Part Name & Description	Pcs	Remarks
VR303		VRV0109B501	V.RESISTOR 500	1	
VR304		VRV0109B102	V.RESISTOR 1K	1	
VR309		VRV0109B101	V.RESISTOR 100	1	
VR310		VRV0109B502	V.RESISTOR 5K	1	
VR311		VRV0109B501	V.RESISTOR 500	1	
VR312		VRV0064B104	V.RESISTOR 100K	1	
VR315,16		VRV0110B502	V.RESISTOR 5K	2	
VR317		VRV0109B501	V.RESISTOR 500	1	
VR318		VRV0109B203	V.RESISTOR 20K	1	
VR319,20		VRV0109B102	V.RESISTOR 1K	2	
VR321		VRV0109B203	V.RESISTOR 20K	1	
VR322		VRV0109B102	V.RESISTOR 1K	1	
VR323		VRV0109B203	V.RESISTOR 20K	1	
VR324		VRV0109B102	V.RESISTOR 1K	1	
VR325		VRV0109B202	V.RESISTOR 2K	1	
VR701,02		VRV0109B501	V.RESISTOR 500	2	
VR712,13		VRV0110B502	V.RESISTOR 5K	2	
VR714		VRV0109B501	V.RESISTOR 500	1	
VR715		VRV0109B203	V.RESISTOR 20K	1	
VR716,17		VRV0109B102	V.RESISTOR 1K	2	
VR718		VRV0109B203	V.RESISTOR 20K	1	
VR719		VRV0109B102	V.RESISTOR 1K	1	
VR720		VRV0109B203	V.RESISTOR 20K	1	
VR721		VRV0109B102	V.RESISTOR 1K	1	
VR722		VRV0109B202	V.RESISTOR 2K	1	
VR727		VRV0109B101	V.RESISTOR 100	1	
			MISCELLANEOUS		
		VML2143	CARD PULLER	1	
		VML2144	CARD PULLER	1	
		VMZ1547	BARRIER	1	
		VXA3966	P.C.B. SHIELD PLATE	1	
		XYNV3+K6FR	SCREW	5	

Ref.No.		Part No.	Part Name & Description	Pcs	Remarks
	■	VEP83173A	P.C.BOARD W/COMPONENT		FOR AU-65H
			W4 DEC & CTCM		
			CAPACITORS		
C1-C3		ECEA0JN101S	E.CAPACITOR 6.3V 100U	3	
C4,C5		ECUM1H050DCN	C.CAPACITOR CH 50V 50P	2	
C6		ECEA1HN010S	E.CAPACITOR 50V 1U	1	
C7		ECUM1C104KBN	C.CAPACITOR CH 16V 0.1U	1	
C8		ECUM1E104ZFN	C.CAPACITOR CH 25V 0.1U	1	
C9		ECEA1CU101	E.CAPACITOR 16V 100U	1	
C10		ECEA1CU101	E.CAPACITOR 16V 100U	1	
C11		ECUM1E104ZFN	C.CAPACITOR CH 25V 0.1U	1	
C12		ECUM1H100DCN	C.CAPACITOR CH 50V 10P	1	
C13,14		ECUM1C104KBN	C.CAPACITOR CH 16V 0.1U	2	
C15		ECUM1H271JCN	C.CAPACITOR CH 50V 270P	1	
C16		ECUM1H470JCN	C.CAPACITOR CH 50V 47P	1	
C17,18		ECUM1H103KBN	C.CAPACITOR CH 50V 0.01U	2	
C19		ECEA1CU470	E.CAPACITOR 16V 47U	1	
C20,21		ECEA0JU330	E.CAPACITOR 6.3V 33U	2	
C22		ECUM1C104KBN	C.CAPACITOR CH 16V 0.1U	1	
C23		ECEA0JU330	E.CAPACITOR 6.3V 33U	1	
C24		ECUM1H103KBN	C.CAPACITOR CH 50V 0.01U	1	
C61		ECUM1H270JCN	C.CAPACITOR CH 50V 27P	1	
C62		ECUM1H103KBN	C.CAPACITOR CH 50V 0.01U	1	
C63		ECEA1CU470	E.CAPACITOR 16V 47U	1	
C64		ECUM1H103KBN	C.CAPACITOR CH 50V 0.01U	1	
C65		ECEA1CU470	E.CAPACITOR 16V 47U	1	
C66-68		ECUM1H103KBN	C.CAPACITOR CH 50V 0.01U	3	
C69		ECUM1H820JCN	C.CAPACITOR CH 50V 82P	1	
C70		ECUM1H103KBN	C.CAPACITOR CH 50V 0.01U	1	
C71		ECEA1CU470	E.CAPACITOR 16V 47U	1	
C72		ECUM1C104KBN	C.CAPACITOR CH 16V 0.1U	1	
C73		ECUM1H470JCN	C.CAPACITOR CH 50V 47P	1	
C75		ECUM1H331JCN	C.CAPACITOR CH 50V 330P	1	
C76,77		ECUM1C104KBN	C.CAPACITOR CH 16V 0.1U	2	
C78		ECEA1HN010S	E.CAPACITOR 50V 1U	1	
C101		ECUM1H101JCN	C.CAPACITOR CH 50V 100P	1	
C102		ECUM1H270JCN	C.CAPACITOR CH 50V 27P	1	
C103		ECUM1H101JCN	C.CAPACITOR CH 50V 100P	1	
C104		ECUM1H220JCN	C.CAPACITOR CH 50V 22P	1	
C111		ECEA1CU470	E.CAPACITOR 16V 47U	1	
C112		ECUM1H471JCN	C.CAPACITOR CH 50V 470P	1	
C113		ECUM1H101JCN	C.CAPACITOR CH 50V 100P	1	
C114		ECUM1H102JCN	C.CAPACITOR CH 50V 1000P	1	
C115,16		ECUM1H101JCN	C.CAPACITOR CH 50V 100P	2	
C120		ECUM1H101JCN	C.CAPACITOR CH 50V 100P	1	
C121		ECUM1H104KBM	C.CAPACITOR CH 50V 0.1U	1	
C122-28		ECUM1H103KBN	C.CAPACITOR CH 50V 0.01U	7	
C151-54		ECUM1H222KBN	C.CAPACITOR CH 50V 2200P	4	
C155		ECEA1AU330	E.CAPACITOR 10V 33U	1	
C156-65		ECUM1H222KBN	C.CAPACITOR CH 50V 2200P	10	
C166		ECEA1AU330	E.CAPACITOR 10V 33U	1	
C167		ECUM1H222KBN	C.CAPACITOR CH 50V 2200P	1	
C181		ECUM1C104KBN	C.CAPACITOR CH 16V 0.1U	1	
C182		ECUM1H103KBN	C.CAPACITOR CH 50V 0.01U	1	
C183		ECEA1CU100	E.CAPACITOR 16V 10U	1	
C184		ECUM1C104KBN	C.CAPACITOR CH 16V 0.1U	1	
C185		ECUM1H103KBN	C.CAPACITOR CH 50V 0.01U	1	
C186		ECEA1CU100	E.CAPACITOR 16V 10U	1	
C187		ECUM1C104KBN	C.CAPACITOR CH 16V 0.1U	1	
C188		ECUM1H103KBN	C.CAPACITOR CH 50V 0.01U	1	
C189		ECEA1CU100	E.CAPACITOR 16V 10U	1	
C190		ECUM1C104KBN	C.CAPACITOR CH 16V 0.1U	1	
C191		ECUM1H103KBN	C.CAPACITOR CH 50V 0.01U	1	
C192		ECEA1CU100	E.CAPACITOR 16V 10U	1	
C193		ECUM1H103KBN	C.CAPACITOR CH 50V 0.01U	1	
C194		ECEA1CU100	E.CAPACITOR 16V 10U	1	
C201		ECEA0JU101	E.CAPACITOR 6.3V 100U	1	
C202		ECUM1H103KBN	C.CAPACITOR CH 50V 0.01U	1	
C203		ECEA0JU101	E.CAPACITOR 6.3V 100U	1	
C204		ECUM1H103KBN	C.CAPACITOR CH 50V 0.01U	1	
C205		ECEA0JU101	E.CAPACITOR 6.3V 100U	1	
C206		ECUM1E104ZFN	C.CAPACITOR CH 25V 0.1U	1	
C207-09		ECUM1H103KBN	C.CAPACITOR CH 50V 0.01U	3	
C210		ECUM1H390JCN	C.CAPACITOR CH 50V 39P	1	
C211-28		ECUM1H103KBN	C.CAPACITOR CH 50V 0.01U	18	
C241		ECUM1H102JCN	C.CAPACITOR CH 50V 1000P	1	
C291,92		ECUM1H103KBN	C.CAPACITOR CH 50V 0.01U	2	
C321		ECUM1H103KBN	C.CAPACITOR CH 50V 0.01U	1	
C322		ECEA0JU330	E.CAPACITOR 6.3V 33U	1	
C323		ECEA0JU471	E.CAPACITOR 6.3V 470U	1	
C324		ECUM1H103KBN	C.CAPACITOR CH 50V 0.01U	1	
C325,26		ECUM1H104KBM	C.CAPACITOR CH 50V 0.1U	2	
C327		ECUM1H270JCN	C.CAPACITOR CH 50V 27P	1	
C328		ECEA0JU330	E.CAPACITOR 6.3V 33U	1	
C329		ECUM1E104ZFN	C.CAPACITOR CH 25V 0.1U	1	
C330		ECUM1H820JCN	C.CAPACITOR CH 50V 82P	1	
C331		ECUM1H103KBN	C.CAPACITOR CH 50V 0.01U	1	
C332,33		ECEA0JN101S	E.CAPACITOR 6.3V 100U	2	
C334		ECEA1CU221	E.CAPACITOR 16V 220U	1	
C335		ECUM1H103KBN	C.CAPACITOR CH 50V 0.01U	1	
C336		ECEA1CU221	E.CAPACITOR 16V 220U	1	
C337		ECUM1H390JCN	C.CAPACITOR CH 50V 39P	1	
C351		ECUM1H103KBN	C.CAPACITOR CH 50V 0.01U	1	
C352		ECEA0JU330	E.CAPACITOR 6.3V 33U	1	
C353		ECUM1H103KBN	C.CAPACITOR CH 50V 0.01U	1	
C354,55		ECUM1H104KBM	C.CAPACITOR CH 50V 0.1U	2	
C356		ECUM1H150JCN	C.CAPACITOR CH 50V 15P	1	
C357		ECUM1H040DCN	C.CAPACITOR CH 50V 4P	1	
C358		ECUM1H560JCN	C.CAPACITOR CH 50V 56P	1	
C359		ECUM1H080DCN	C.CAPACITOR CH 50V 80P	1	
C360		ECUM1H680JCN	C.CAPACITOR CH 50V 68P	1	
C361		ECEA0JN101S	E.CAPACITOR 6.3V 100U	1	
C362,63		ECUM1H103KBN	C.CAPACITOR CH 50V 0.01U	2	
C366		ECUM1H103KBN	C.CAPACITOR CH 50V 0.01U	1	
C367		ECEA0JU330	E.CAPACITOR 6.3V 33U	1	
C368		ECUM1H103KBN	C.CAPACITOR CH 50V 0.01U	1	
C369,70		ECUM1H104KBM	C.CAPACITOR CH 50V 0.1U	2	
C371		ECUM1H150JCN	C.CAPACITOR CH 50V 15P	1	
C372		ECUM1H040DCN	C.CAPACITOR CH 50V 4P	1	
C373		ECUM1H560JCN	C.CAPACITOR CH 50V 56P	1	
C374		ECUM1H080DCN	C.CAPACITOR CH 50V 80P	1	
C375		ECUM1H680JCN	C.CAPACITOR CH 50V 68P	1	
C376		ECEA0JN101S	E.CAPACITOR 6.3V 100U	1	
C377,78		ECUM1H103KBN	C.CAPACITOR CH 50V 0.01U	2	
C401		ECEA1CU470	E.CAPACITOR 16V 47U	1	
C402,03		ECUM1H103KBN	C.CAPACITOR CH 50V 0.01U	2	
C404		ECUM1H102JCN	C.CAPACITOR CH 50V 1000P	1	
C405		ECUM1H103KBN	C.CAPACITOR CH 50V 0.01U	1	
C406		ECUM1H331JCN	C.CAPACITOR CH 50V 330P	1	
C408		ECUM1H103KBN	C.CAPACITOR CH 50V 0.01U	1	
C409		ECUM1H121JCN	C.CAPACITOR CH 50V 120P	1	
C410		ECUM1H103KBN	C.CAPACITOR CH 50V 0.01U	1	
C415		ECUM1H101JCN	C.CAPACITOR CH 50V 100P	1	
C416,17		ECUM1H331JCN	C.CAPACITOR CH 50V 330P	2	
C421-25		ECUM1H103KBN	C.CAPACITOR CH 50V 0.01U	5	
C451		ECUM1H103KBN	C.CAPACITOR CH 50V 0.01U	1	
C452		ECEA0JU330	E.CAPACITOR 6.3V 33U	1	
C453		ECUM1H103KBN	C.CAPACITOR CH 50V 0.01U	1	
C454,55		ECUM1H104KBM	C.CAPACITOR CH 50V 0.1U	2	
C456		ECUM1H150JCN	C.CAPACITOR CH 50V 15P	1	
C457		ECUM1H040DCN	C.CAPACITOR CH 50V 4P	1	
C458		ECUM1H560JCN	C.CAPACITOR CH 50V 56P	1	
C459		ECEA1CU470	E.CAPACITOR 16V 47U	1	
C460		ECUM1H103KBN	C.CAPACITOR CH 50V 0.01U	1	
C461		ECEA1CU470	E.CAPACITOR 16V 47U	1	
C462		ECUM1H103KBN	C.CAPACITOR CH 50V 0.01U	1	
C463		ECEA1HU4R7	E.CAPACITOR 50V 4.7U	1	
C464-66		ECUM1H103KBN	C.CAPACITOR CH 50V 0.01U	3	
C467		ECEA1HNR47S	E.CAPACITOR 50V 0.47U	1	
C468		ECUM1C104KBN	C.CAPACITOR CH 16V 0.1U	1	
C469		ECUM1H103KBN	C.CAPACITOR CH 50V 0.01U	1	
C472		ECUM1H103KBN	C.CAPACITOR CH 50V 0.01U	1	

Ref.No.		Part No.	Part Name & Description	Pcs	Remarks
C501		ECUM1H103KBN	C.CAPACITOR CH 50V 0.01U	1	
C502		ECEA1CU470	E.CAPACITOR 16V 47U	1	
C503		ECUM1H103KBN	C.CAPACITOR CH 50V 0.01U	1	
C504		ECEA1CU470	E.CAPACITOR 16V 47U	1	
C505		ECUM1H330JCN	C.CAPACITOR CH 50V 33P	1	
C509		ECUM1C104KBN	C.CAPACITOR CH 16V 0.1U	1	
C510		ECEA1CU470	E.CAPACITOR 16V 47U	1	
C511		ECUM1C104KBN	C.CAPACITOR CH 16V 0.1U	1	
C513		ECUM1H103KBN	C.CAPACITOR CH 50V 0.01U	1	
C517		ECUM1H330JCN	C.CAPACITOR CH 50V 33P	1	
C520		ECUM1H103KBN	C.CAPACITOR CH 50V 0.01U	1	
C521		ECUM1C104KBN	C.CAPACITOR CH 16V 0.1U	1	
C522		ECEA1CU470	E.CAPACITOR 16V 47U	1	
C523		ECUM1C104KBN	C.CAPACITOR CH 16V 0.1U	1	
C524		ECUM1H103KBN	C.CAPACITOR CH 50V 0.01U	1	
C525		ECEA1CU470	E.CAPACITOR 16V 47U	1	
C526		ECUM1H470JCN	C.CAPACITOR CH 50V 47P	1	
C527		ECUM1H180JCN	C.CAPACITOR CH 50V 18P	1	
C528		ECUM1C104KBN	C.CAPACITOR CH 16V 0.1U	1	
C529		ECUM1H470JCN	C.CAPACITOR CH 50V 47P	1	
C531		ECUM1H103KBN	C.CAPACITOR CH 50V 0.01U	1	
C532		ECEA1CU470	E.CAPACITOR 16V 47U	1	
C533,34		ECUM1H270JCN	C.CAPACITOR CH 50V 27P	2	
C535		ECUM1H180JCN	C.CAPACITOR CH 50V 18P	1	
C536		ECUM1H470JCN	C.CAPACITOR CH 50V 47P	1	
C537		ECUM1C104KBN	C.CAPACITOR CH 16V 0.1U	1	
C538-40		ECUM1H103KBN	C.CAPACITOR CH 50V 0.01U	3	
C541		ECEA1CU470	E.CAPACITOR 16V 47U	1	
C542		ECUM1H103KBN	C.CAPACITOR CH 50V 0.01U	1	
C543		ECEA1CU470	E.CAPACITOR 16V 47U	1	
C544		ECUM1H080DCN	C.CAPACITOR CH 50V 80P	1	
C545		ECEA1CU470	E.CAPACITOR 16V 47U	1	
C547		ECUM1H470JCN	C.CAPACITOR CH 50V 47P	1	
C548,49		ECUM1C104KBN	C.CAPACITOR CH 16V 0.1U	2	
C550,51		ECUM1H103KBN	C.CAPACITOR CH 50V 0.01U	2	
C552		ECUM1H820JCN	C.CAPACITOR CH 50V 82P	1	
C553		ECUM1H390JCN	C.CAPACITOR CH 50V 39P	1	
C554		ECUM1H181JCN	C.CAPACITOR CH 50V 180P	1	
C555-57		ECUM1C104KBN	C.CAPACITOR CH 16V 0.1U	3	
C558		ECEA1HN010S	E.CAPACITOR 50V 1U	1	
C559-61		ECUM1H103KBN	C.CAPACITOR CH 50V 0.01U	3	
C562		ECEA1CU100	E.CAPACITOR 16V 10U	1	
C563		ECUM1E104ZFN	C.CAPACITOR CH 25V 0.1U	1	
C564		ECUM1H103KBN	C.CAPACITOR CH 50V 0.01U	1	
C565		ECEA1CU100	E.CAPACITOR 16V 10U	1	
C566		ECUM1E104ZFN	C.CAPACITOR CH 25V 0.1U	1	
C567		ECUM1H103KBN	C.CAPACITOR CH 50V 0.01U	1	
C568		ECEA1CU100	E.CAPACITOR 16V 10U	1	
C601-04		ECUM1H222KBN	C.CAPACITOR CH 50V 2200P	4	
C605		ECEA1AKG330	E.CAPACITOR 10V 33U	1	
C606,07		ECUM1H222KBN	C.CAPACITOR CH 50V 2200P	2	
C608		ECEA1AKG330	E.CAPACITOR 10V 33U	1	
C609-14		ECUM1H222KBN	C.CAPACITOR CH 50V 2200P	6	
C615		ECEA1AKG330	E.CAPACITOR 10V 33U	1	
C616		ECUM1H222KBN	C.CAPACITOR CH 50V 2200P	1	
C617		ECEA1AKG330	E.CAPACITOR 10V 33U	1	
C618-21		ECUM1H222KBN	C.CAPACITOR CH 50V 2200P	4	
C622		ECEA1AKG330	E.CAPACITOR 10V 33U	1	
C623,24		ECUM1H222KBN	C.CAPACITOR CH 50V 2200P	2	
C626-31		ECUM1H222KBN	C.CAPACITOR CH 50V 2200P	6	
C633		ECUM1H222KBN	C.CAPACITOR CH 50V 2200P	1	
C634		ECEA1AKG330	E.CAPACITOR 10V 33U	1	
C635-38		ECUM1E104ZFN	C.CAPACITOR CH 25V 0.1U	4	
C639		ECUM1H103KBN	C.CAPACITOR CH 50V 0.01U	1	
C640		ECEA0JU101	E.CAPACITOR 6.3V 100U	1	
C641,42		ECUM1E104ZFN	C.CAPACITOR CH 25V 0.1U	2	
C643		ECEA0JU330	E.CAPACITOR 6.3V 33U	1	
C645		ECUM1H103KBN	C.CAPACITOR CH 50V 0.01U	1	
C646		ECEA0JU330	E.CAPACITOR 6.3V 33U	1	
C647		ECUM1E104ZFN	C.CAPACITOR CH 25V 0.1U	1	
C648		ECEA1HU2R2	E.CAPACITOR 50V 2.2U	1	
C649		ECUM1H103KBN	C.CAPACITOR CH 50V 0.01U	1	
C650		ECEA1CKG470	E.CAPACITOR 16V 47U	1	
C651-53		ECUM1H103KBN	C.CAPACITOR CH 50V 0.01U	3	
C655		ECUM1E104ZFN	C.CAPACITOR CH 25V 0.1U	1	

Ref.No.		Part No.	Part Name & Description	Pcs	Remarks
C657		ECEA1CU221	E.CAPACITOR 16V 220U	1	
C658		ECUM1H050DCN	C.CAPACITOR CH 50V 50P	1	
C659		ECUM1H103KBN	C.CAPACITOR CH 50V 0.01U	1	
C660		ECEA1CU470	E.CAPACITOR 16V 47U	1	
C661		ECUM1H103KBN	C.CAPACITOR CH 50V 0.01U	1	
C662		ECEA1CU470	E.CAPACITOR 16V 47U	1	
C663		ECUM1H270JCN	C.CAPACITOR CH 50V 27P	1	
C664		ECUM1H221JCN	C.CAPACITOR CH 50V 220P	1	
C665		ECUM1H680JCN	C.CAPACITOR CH 50V 68P	1	
C666,67		ECEA1CU470	E.CAPACITOR 16V 47U	2	
C668		ECEA1CU101	E.CAPACITOR 16V 100U	1	
C679		ECUM1H470JCN	C.CAPACITOR CH 50V 47P	1	
C680-83		ECUM1H222KBN	C.CAPACITOR CH 50V 2200P	4	
C701		ECUM1H470JCN	C.CAPACITOR CH 50V 47P	1	
C702		ECUM1H103KBN	C.CAPACITOR CH 50V 0.01U	1	
C703		ECEA1CU470	E.CAPACITOR 16V 47U	1	
C704		ECUM1H331JCN	C.CAPACITOR CH 50V 330P	1	
C708		ECUM1H103KBN	C.CAPACITOR CH 50V 0.01U	1	
C709		ECEA1CU470	E.CAPACITOR 16V 47U	1	
C710		ECUM1H103KBN	C.CAPACITOR CH 50V 0.01U	1	
C711		ECUM1H102JCN	C.CAPACITOR CH 50V 1000P	1	
C712		ECUM1H820JCN	C.CAPACITOR CH 50V 82P	1	
C713,14		ECUM1H103KBN	C.CAPACITOR CH 50V 0.01U	2	
C715		ECEA1CU470	E.CAPACITOR 16V 47U	1	
C716		ECUM1H103KBN	C.CAPACITOR CH 50V 0.01U	1	
C717		ECUM1H331JCN	C.CAPACITOR CH 50V 330P	1	
C718-20		ECUM1H103KBN	C.CAPACITOR CH 50V 0.01U	3	
C721		ECQM1H122JF	P.CAPACITOR 50V 1200P	1	
C722-24		ECUM1H103KBN	C.CAPACITOR CH 50V 0.01U	3	
C725		ECEA1HN2R2S	E.CAPACITOR 50V 2.2U	1	
C726		ECEA1HNR47S	E.CAPACITOR 50V 0.47U	1	
C727		ECEA1HN010S	E.CAPACITOR 50V 1U	1	
C728		ECEA1HN2R2S	E.CAPACITOR 50V 2.2U	1	
C729		ECUM1H680JCN	C.CAPACITOR CH 50V 68P	1	
C730		ECUM1H103KBN	C.CAPACITOR CH 50V 0.01U	1	
C731		ECUM1H070DCN	C.CAPACITOR CH 50V 7P	1	
C732,33		ECUM1H103KBN	C.CAPACITOR CH 50V 0.01U	2	
C734		ECUM1H680JCN	C.CAPACITOR CH 50V 68P	1	
C735		ECUM1H471JCN	C.CAPACITOR CH 50V 470P	1	
C736		ECUM1H101JCN	C.CAPACITOR CH 50V 100P	1	
C737,38		ECEA1CU100	E.CAPACITOR 16V 10U	2	
C739		ECUM1H050DCN	C.CAPACITOR CH 50V 50P	1	
C740		ECUM1H103KBN	C.CAPACITOR CH 50V 0.01U	1	
C743,44		ECUM1H103KBN	C.CAPACITOR CH 50V 0.01U	2	
C745,46		ECUM1H102JCN	C.CAPACITOR CH 50V 1000P	2	
C749		ECUM1H103KBN	C.CAPACITOR CH 50V 0.01U	1	
C750		ECUM1H390JCN	C.CAPACITOR CH 50V 39P	1	
C751		ECEA0JU220	E.CAPACITOR 6.3V 22U	1	
C752		ECUM1H103KBN	C.CAPACITOR CH 50V 0.01U	1	
C761		ECUM1H220JCN	C.CAPACITOR CH 50V 22P	1	
C762		ECUM1H050DCN	C.CAPACITOR CH 50V 50P	1	
C763,64		ECUM1H560JCN	C.CAPACITOR CH 50V 56P	2	
C781		ECUM1H390JCN	C.CAPACITOR CH 50V 39P	1	
C791		ECUM1H102JCN	C.CAPACITOR CH 50V 1000P	1	
C800		VCK0036104KR	C.CAPACITOR 50V 0.1U	1	
C801		VCK0036104KR	C.CAPACITOR 50V 0.1U	1	
C802		ECCF1H820JC	C.CAPACITOR 50V 82P	1	
C803		ECCF1H560JC	C.CAPACITOR 50V 56P	1	
C804		ECCF1H560JC	C.CAPACITOR 50V 56P	1	
C805		VCK0036104KR	C.CAPACITOR 50V 0.1U	1	
C806		VCK0036104KR	C.CAPACITOR 50V 0.1U	1	
C807		ECCF1H820JC	C.CAPACITOR 50V 82P	1	
D1		1SZ51	DIODE	1	
D61		MA151WK	DIODE	1	
D111		MA151K	DIODE	1	
D112		MA151WA	DIODE	1	
D114		MA704	DIODE	1	
D201		MA151WK	DIODE	1	
D202		MA151WA	DIODE	1	
D203		MA151WK	DIODE	1	
D204		MA151WA	DIODE	1	
D205,06		MA151K	DIODE	2	

Ref.No.		Part No.	Part Name & Description	Pcs	Remarks
D259		MA704	DIODE	1	
D275		MA704	DIODE	1	
D501		MA151K	DIODE	1	
D502		MA151WK	DIODE	1	
D601,02		MA704	DIODE	2	
D603		1S250	DIODE	1	
D701		MA151K	DIODE	1	
D702		MA704	DIODE	1	
D703		MA151K	DIODE	1	
D704,05		MA153	DIODE	2	
D706,07		MA335-R	DIODE	2	
D708		MA151WA	DIODE	1	
D709		MA151WK	DIODE	1	
D710,11		MA151WA	DIODE	2	
D712		MA151K	DIODE	1	
FL1		VLF0712	FILTER	1	
FL151		VLF0576	FILTER	1	
FL201		VLF0691	FILTER	1	
FL202-04		VLF0576	FILTER	3	
FL401		VLF0576	FILTER	1	
FL451,52		VLF0576	FILTER	2	
FL501,02		VLF0753	FILTER	2	
FL601-04		VLF0576	FILTER	4	
FL605		VLF0754	FILTER	1	
IC1		VCR0133	IC	1	
IC2		UPD4053BG	IC	1	
IC3		TL082CPS	IC	1	
IC4		NJM3415M	IC	1	
IC5		HA19211BNT	IC	1	
IC6		UPD4053BG	IC	1	
IC7		MC74HC163F	IC	1	
IC8,C9		MC14053BF	IC	2	(R)
IC10		AN91A12S	IC	1	
IC11,12		SN74LS221NS	IC	2	
IC14		SN74LS221NS	IC	1	
IC15		SN74LS123NS	IC	1	
IC17		MC74HC74AF	IC	1	
IC18		MC74HC00AF	IC	1	
IC19-24		MN74HC161S	IC	6	
IC25		MC74HC32AF	IC	1	
IC26		TL082CPS	IC	1	
IC27		NJM311M	IC	1	
IC51		AN78N09	IC	1	
IC52		AN78N05	IC	1	
IC53		AN79N09	IC	1	
IC54		AN79N05	IC	1	
IC201		MC74HC574AF	IC	1	
IC202		UPD42505C-50	IC	1	
IC203		MC74HC04AF	IC	1	
IC204		MC74HC00AF	IC	1	
IC205		UPD65022F046	IC	1	
IC206-08		MC74HC157AF	IC	3	
IC209		UPD42505C-50	IC	1	
IC210		UPD65042F024	IC	1	
IC211		UPD42505C-50	IC	1	
IC212,13		MC74HC173F	IC	2	
IC215		MB40778PF	IC	1	
IC216,17		MC74HC574AF	IC	2	
IC219		MC74HC74AF	IC	1	
IC220		MB40778PF	IC	1	
IC221		MC74HC366F	IC	1	
IC222		MC74HC04AF	IC	1	
IC225		MB40778PF	IC	1	
IC227-29		TL082CPS	IC	3	
IC230		MB40778PF	IC	1	
IC233,34		UPD4053BG	IC	2	
IC235		UPD4052BG	IC	1	
IC236,37		UPD4053BG	IC	2	
IC238		MC74HC74AF	IC	1	

Ref.No.		Part No.	Part Name & Description	Pcs	Remarks
IC401		MM74HC221AM	IC	1	
IC402		SN74LS221NS	IC	1	
IC403		UPD65013BC16	IC	1	
IC405,06		MC74HC74AF	IC	2	
IC407		MC74HC00AF	IC	1	
IC408		MC74HC175F	IC	1	
IC409		MC74HC04AF	IC	1	
IC501		TL082CPS	IC	1	
IC503,04		MC74HC4053F	IC	2	
IC505		AN91A12S	IC	1	
IC506		AN78N09	IC	1	
IC507		AN78N05	IC	1	
IC510		UPD4053BG	IC	1	
IC601,02		HA19211BNT	IC	2	
IC603,04		UPD42101G-3	IC	2	
IC605		MC74HC574AF	IC	1	
IC606		MB40778PF	IC	1	
IC607		NJM3415M	IC	1	
IC609		AN78L05	IC	1	
IC610		NJM2233BMA	IC	1	
IC703		SN74LS221NS	IC	1	
IC704		MC74HC157AF	IC	1	
IC705		MC74HC74AF	IC	1	
IC706		TL082CPS	IC	1	
IC707		MC74HC4053F	IC	1	
IC708		TL084CNS	IC	1	
IC709		MC74HC00AF	IC	1	
IC710		SN74LS221NS	IC	1	
IC711		MC74HC04AF	IC	1	
IC712		MC74HC14AF	IC	1	
IC713		UPD65013FC25	IC	1	
IC714		MC74HC163F	IC	1	
IC781		MC74HC374AF	IC	1	
IC783		MC74HC157AF	IC	1	
IC791		MM74HC221AM	IC	1	
IC792		MC74HC32AF	IC	1	
L1,L2		VLQEL05S101K	COIL 100UH	2	
L3		VLQEL05S821J	COIL 820UH	1	
L4		VLQEL05S1R5J	COIL 1.5UH	1	
L61		VLQEL05S330J	COIL 33UH	1	
L62,63		VLQEL05S101K	COIL 100UH	2	
L64		VLQEL05S821J	COIL 820UH	1	
L101,02		VLQEL05S3R3J	COIL 3.3UH	2	
L151		VLP0017	COIL	1	
L321		VLQEL05S330J	COIL 33UH	1	
L322		VLQEL05S390J	COIL 39UH	1	
L323,24		VLQEL05S101K	COIL 100UH	2	
L325		VLP0017	COIL	1	
L351		VLQEL05S560J	COIL 56UH	1	
L352		VLP0017	COIL	1	
L366		VLQEL05S560J	COIL 56UH	1	
L367		VLP0017	COIL	1	
L451		VLQEL05S560J	COIL 56UH	1	
L452		VLP0017	COIL	1	
L501,02		VLQEL05S101K	COIL 100UH	2	
L505		VLQEL05S101K	COIL 100UH	1	
L506		VLQEL05S470J	COIL 47UH	1	
L507		VLQEL05S101K	COIL 100UH	1	
L508		VLQEL05S470J	COIL 47UH	1	
L509,10		VLQEL05S101K	COIL 100UH	2	
L513		VLQEL05S471J	COIL 470UH	1	
L601-03		VLP0017	COIL	3	
L604		VLQEL05S221K		1	
L606,07		VLQEL05S101K	COIL 100UH	2	
L608		VLQEL05S820J	COIL 82UH	1	
L701		VLQEL05S101K	COIL 100UH	1	
L703,04		VLQEL05S101K	COIL 100UH	2	
L705		VLQEL05S3R3J	COIL 3.3UH	1	
L706		VLQEL05S1R5J	COIL 1.5UH	1	
L707		VLQEL05S560J	COIL 56UH	1	

Ref.No.	Part No.	Part Name & Description	Pcs	Remarks
P1,P2	VJP1233T	CONNECTOR(MALE) 6P	2	
Q1	2SB709-R	TRANSISTOR CHIP	1	(Q,R)
Q2	2SA1022-B	TRANSISTOR CHIP	1	(B,C)
Q3	2SB709-R	TRANSISTOR CHIP	1	(Q,R)
Q4	2SD601-R	TRANSISTOR CHIP	1	(Q,R)
Q5	2SB709-R	TRANSISTOR CHIP	1	(Q,R)
Q6	2SD601-R	TRANSISTOR CHIP	1	(Q,R)
Q7-Q9	2SC2295-B	TRANSISTOR CHIP	3	(B,C)
Q10	2SK374-R	TRANSISTOR	1	(Q,R)
Q11	UN221L	TRANSISTOR	1	
Q61	2SD601-R	TRANSISTOR CHIP	1	(Q,R)
Q101	2SB709-R	TRANSISTOR CHIP	1	(Q,R)
Q111	UN2212	TRANSISTOR-RESISTOR	1	
Q283-85	2SD601-R	TRANSISTOR CHIP	3	(Q,R)
Q321	2SA1022-B	TRANSISTOR CHIP	1	(B,C)
Q322	2SB709-R	TRANSISTOR CHIP	1	(Q,R)
Q323-25	2SC2295-B	TRANSISTOR CHIP	3	(B,C)
Q326	2SB709-R	TRANSISTOR CHIP	1	(Q,R)
Q327	2SD601-R	TRANSISTOR CHIP	1	(Q,R)
Q328	2SB709-R	TRANSISTOR CHIP	1	(Q,R)
Q329,30	2SC2295-B	TRANSISTOR CHIP	2	(B,C)
Q351-53	2SA1022-B	TRANSISTOR CHIP	3	(B,C)
Q354,55	2SB709-R	TRANSISTOR CHIP	2	(Q,R)
Q366-68	2SA1022-B	TRANSISTOR CHIP	3	(B,C)
Q369,70	2SB709-R	TRANSISTOR CHIP	2	(Q,R)
Q401,02	UN2212	TRANSISTOR-RESISTOR	2	
Q450	2SD601-R	TRANSISTOR CHIP	1	(Q,R)
Q451	2SC2404-C	TRANSISTOR CHIP	1	(C,D)
Q452	2SD601-R	TRANSISTOR CHIP	1	(Q,R)
Q501,02	2SD601-R	TRANSISTOR CHIP	2	(Q,R)
Q503,04	2SC2295-B	TRANSISTOR CHIP	2	(B,C)
Q506	2SC2295-B	TRANSISTOR CHIP	1	(B,C)
Q507	2SK374-R	TRANSISTOR	1	(Q,R)
Q509,10	2SD601-R	TRANSISTOR CHIP	2	(Q,R)
Q511,12	2SC2295-B	TRANSISTOR CHIP	2	(B,C)
Q514	2SC2295-B	TRANSISTOR CHIP	1	(B,C)
Q515	2SK374-R	TRANSISTOR	1	(Q,R)
Q517	2SB709-R	TRANSISTOR CHIP	1	(Q,R)
Q518,19	2SD601-R	TRANSISTOR CHIP	2	(Q,R)
Q520	2SB709-R	TRANSISTOR CHIP	1	(Q,R)
Q521	2SD601-R	TRANSISTOR CHIP	1	(Q,R)
Q522	2SB709-R	TRANSISTOR CHIP	1	(Q,R)
Q523	2SD601-R	TRANSISTOR CHIP	1	(Q,R)
Q525	2SA1022-B	TRANSISTOR CHIP	1	(B,C)
Q526,27	2SB709-R	TRANSISTOR CHIP	2	(Q,R)
Q528	2SD601-R	TRANSISTOR CHIP	1	(Q,R)
Q601	2SD601-R	TRANSISTOR CHIP	1	(Q,R)
Q602	2SA1022-B	TRANSISTOR CHIP	1	(B,C)
Q603	2SB709-R	TRANSISTOR CHIP	1	(Q,R)
Q604-06	2SC2295-B	TRANSISTOR CHIP	3	(B,C)
Q609	2SB709-R	TRANSISTOR CHIP	1	(Q,R)
Q701	2SD601-R	TRANSISTOR CHIP	1	(Q,R)
Q702	2SC2404-C	TRANSISTOR CHIP	1	(C,D)
Q703	2SD601-R	TRANSISTOR CHIP	1	(Q,R)
Q704	UN2112	TRANSISTOR-RESISTOR	1	
Q706	2SD601-R	TRANSISTOR CHIP	1	(Q,R)
Q707	2SC3757	TRANSISTOR	1	(Q,R)
Q708,09	2SA1226	TRANSISTOR	2	
Q710	2SC3757	TRANSISTOR	1	(Q,R)
Q711	2SB709-R	TRANSISTOR CHIP	1	(Q,R)
Q791	2SC3757	TRANSISTOR	1	(Q,R)
		RESISTORS		
R1	ERJ6GEYJ102	M.RESISTOR CH 1/10W 1K	1	
R2	ERJ6GEYJ101	M.RESISTOR CH 1/10W 100	1	
R3	ERJ6GEYJ103	M.RESISTOR CH 1/10W 10K	1	
R4	ERJ6GEYJ101	M.RESISTOR CH 1/10W 100	1	
R5	ERJ6GEYJ472	M.RESISTOR CH 1/10W 4.7K	1	
R6	ERJ6GEYJ222	M.RESISTOR CH 1/10W 2.2K	1	

Ref.No.	Part No.	Part Name & Description	Pcs	Remarks
R7,R8	ERJ6GEYG122	M.RESISTOR CH 1/10W 1.2K	2	
R9	ERJ6GEYJ152	M.RESISTOR CH 1/10W 1.5K	1	
R10,11	ERJ6GEYJ472	M.RESISTOR CH 1/10W 4.7K	2	
R12	ERJ6GEYJ101	M.RESISTOR CH 1/10W 100	1	
R13	ERJ6GEYJ472	M.RESISTOR CH 1/10W 4.7K	1	
R14	ERJ6GEYJ102	M.RESISTOR CH 1/10W 1K	1	
R15	ERJ6GEYJ470	M.RESISTOR CH 1/10W 47	1	
R16	ERJ6GEYJ222	M.RESISTOR CH 1/10W 2.2K	1	
R17,18	ERJ6GEYG331	M.RESISTOR CH 1/10W 330	2	
R19,20	ERJ6GEYJ470	M.RESISTOR CH 1/10W 47	2	
R21	ERJ6GEYJ472	M.RESISTOR CH 1/10W 4.7K	1	
R22	ERJ6GEYJ272	M.RESISTOR CH 1/10W 2.7K	1	
R23	ERJ6GEYJ154	M.RESISTOR CH 1/10W 150K	1	
R24,25	ERJ6GEYJ222	M.RESISTOR CH 1/10W 2.2K	2	
R26	ERJ6GEYJ561	M.RESISTOR CH 1/10W 560	1	
R27	ERJ6GEYJ682	M.RESISTOR CH 1/10W 6.8K	1	
R28	ERJ6GEYJ332	M.RESISTOR CH 1/10W 3.3K	1	
R29	ERJ6GEYJ473	M.RESISTOR CH 1/10W 47K	1	
R30	ERJ6GEYJ103	M.RESISTOR CH 1/10W 10K	1	
R31	ERJ6GEYJ222	M.RESISTOR CH 1/10W 2.2K	1	
R32	VRE0034E272	M.RESISTOR CH 1/10W 2.7K	1	
R33	VRE0034E202	M.RESISTOR CH 1/10W 2K	1	
R34	VRE0034E152	M.RESISTOR CH 1/10W 1.5K	1	
R35,36	VRE0034E102	M.RESISTOR CH 1/10W 1K	2	
R37	VRE0034E202	M.RESISTOR CH 1/10W 2K	1	
R38	ERJ6GEYJ103	M.RESISTOR CH 1/10W 10K	1	
R39	ERJ6GEYJ105	M.RESISTOR CH 1/10W 1M	1	
R40	ERJ6GEYJ271	M.RESISTOR CH 1/10W 270	1	
R41	ERJ6GEYJ6R8	M.RESISTOR CH 1/10W 6.8	1	
R42	ERJ6GEYJ471	M.RESISTOR CH 1/10W 470	1	
R51	ERJ6GEYG223	M.RESISTOR CH 1/10W 22K	1	
R61	ERJ6GEYJ102	M.RESISTOR CH 1/10W 1K	1	
R62	ERJ6GEYJ822	M.RESISTOR CH 1/10W 8.2K	1	
R63	ERJ6GEYJ683	M.RESISTOR CH 1/10W 68K	1	
R64	ERJ6GEYJ470	M.RESISTOR CH 1/10W 47	1	
R65	ERJ6GEYJ472	M.RESISTOR CH 1/10W 4.7K	1	
R66	ERJ6GEYJ102	M.RESISTOR CH 1/10W 1K	1	
R67	ERJ6GEYJ224	M.RESISTOR CH 1/10W 220K	1	
R68	ERJ6GEYJ684	M.RESISTOR CH 1/10W 680K	1	
R69-71	ERJ6GEYJ103	M.RESISTOR CH 1/10W 10K	3	
R72	ERJ6GEYJ222	M.RESISTOR CH 1/10W 2.2K	1	
R73	ERJ6GEYG221	M.RESISTOR CH 1/10W 220	1	
R74	ERJ6GEYJ102	M.RESISTOR CH 1/10W 1K	1	
R75	ERJ6GEYJ222	M.RESISTOR CH 1/10W 2.2K	1	
R76	ERJ6GEYJ103	M.RESISTOR CH 1/10W 10K	1	
R101	ERJ6GEYJ472	M.RESISTOR CH 1/10W 4.7K	1	
R102	ERJ6GEYJ470	M.RESISTOR CH 1/10W 47	1	
R103	ERJ6GEYJ102	M.RESISTOR CH 1/10W 1K	1	
R104	ERJ6GEYJ272	M.RESISTOR CH 1/10W 2.7K	1	
R105	ERJ6GEY0R00	M.RESISTOR CH 1/10W 0	1	
R106	ERJ6GEYJ182	M.RESISTOR CH 1/10W 1.8K	1	
R107	ERJ6GEYJ103	M.RESISTOR CH 1/10W 10K	1	
R108	ERJ6GEYJ562	M.RESISTOR CH 1/10W 5.6K	1	
R111	ERJ6GEYJ272	M.RESISTOR CH 1/10W 2.7K	1	
R112	ERJ6GEYJ153	M.RESISTOR CH 1/10W 15K	1	
R113	ERJ6GEYJ562	M.RESISTOR CH 1/10W 5.6K	1	
R114	ERJ6GEYJ682	M.RESISTOR CH 1/10W 6.8K	1	
R115	ERJ6GEYG223	M.RESISTOR CH 1/10W 22K	1	
R116	ERJ6GEYJ562	M.RESISTOR CH 1/10W 5.6K	1	
R117	ERJ6GEYJ682	M.RESISTOR CH 1/10W 6.8K	1	
R121	ERJ6GEY0R00	M.RESISTOR CH 1/10W 0	1	
R122	ERJ6GEYJ103	M.RESISTOR CH 1/10W 10K	1	
R123	ERJ6GEYJ562	M.RESISTOR CH 1/10W 5.6K	1	
R126	ERJ6GEYJ102	M.RESISTOR CH 1/10W 1K	1	
R127	ERJ6GEYJ683	M.RESISTOR CH 1/10W 68K	1	
R128	ERJ6GEYJ562	M.RESISTOR CH 1/10W 5.6K	1	
R129	ERJ6GEYJ393	M.RESISTOR CH 1/10W 39K	1	
R130	ERJ6GEYJ562	M.RESISTOR CH 1/10W 5.6K	1	
R131	ERJ6GEY0R00	M.RESISTOR CH 1/10W 0	1	
R133	ERJ6GEYJ152	M.RESISTOR CH 1/10W 1.5K	1	
R145-49	ERJ6GEY0R00	M.RESISTOR CH 1/10W 0	5	
R151	ERJ6GEYJ152	M.RESISTOR CH 1/10W 1.5K	1	
R152	ERJ6GEYJ470	M.RESISTOR CH 1/10W 47	1	
R160-67	ERJ6GEYJ222	M.RESISTOR CH 1/10W 2.2K	8	
R202	ERJ6GEY0R00	M.RESISTOR CH 1/10W 0	1	

Ref.No.		Part No.	Part Name & Description	Pcs	Remarks
R203		ERJ6GEYJ103	M.RESISTOR CH 1/10W 10K	1	
R204		ERJ6GEYG563	M.RESISTOR CH 1/10W 56K	1	
R205		ERJ6GEYJ104	M.RESISTOR CH 1/10W 100K	1	
R206		ECUM1H820JCN	C.CAPACITOR CH 50V 82P	1	
R207-14		ERJ6GEYJ222	M.RESISTOR CH 1/10W 2.2K	8	
R218		ERJ6GEYJ104	M.RESISTOR CH 1/10W 100K	1	
R221-30		ERJ6GEYJ103	M.RESISTOR CH 1/10W 10K	10	
R231,32		ERJ6GEY0R00	M.RESISTOR CH 1/10W 0	2	
R235		ERJ6GEY0R00	M.RESISTOR CH 1/10W 0	1	
R241		ERJ6GEYG133	M.RESISTOR CH 1/10W 13K	1	
R242		ERJ6GEYJ103	M.RESISTOR CH 1/10W 10K	1	
R243		ERJ6GEYJ562	M.RESISTOR CH 1/10W 5.6K	1	
R245		ERJ6GEYJ103	M.RESISTOR CH 1/10W 10K	1	
R246-48		ECUM1H680JCN	C.CAPACITOR CH 50V 68P	3	
R251-82		ERJ6GEYJ222	M.RESISTOR CH 1/10W 2.2K	32	
R283		ERJ6GEYJ101	M.RESISTOR CH 1/10W 100	1	
R284		ERJ6GEYJ222	M.RESISTOR CH 1/10W 2.2K	1	
R285		ERJ6GEYJ330	M.RESISTOR CH 1/10W 33	1	
R286		ERJ6GEYJ101	M.RESISTOR CH 1/10W 100	1	
R287		ERJ6GEYJ222	M.RESISTOR CH 1/10W 2.2K	1	
R288		ERJ6GEYJ330	M.RESISTOR CH 1/10W 33	1	
R289		ERJ6GEYJ101	M.RESISTOR CH 1/10W 100	1	
R290		ERJ6GEYJ222	M.RESISTOR CH 1/10W 2.2K	1	
R291		ERJ6GEY0R00	M.RESISTOR CH 1/10W 0	1	
R292		ERJ6GEYJ330	M.RESISTOR CH 1/10W 33	1	
R301		ERJ6GEY0R00	M.RESISTOR CH 1/10W 0	1	
R311		ERJ6GEY0R00	M.RESISTOR CH 1/10W 0	1	
R321		ERJ6GEYG221	M.RESISTOR CH 1/10W 220	1	
R322		ERJ6GEYG222	M.RESISTOR CH 1/10W 2.2K	1	
R323		ERJ6GEYJ470	M.RESISTOR CH 1/10W 47	1	
R324		ERJ6GEYG301	M.RESISTOR CH 1/10W 300	1	
R325		ERJ6GEYJ222	M.RESISTOR CH 1/10W 2.2K	1	
R326		ERJ6GEYG222	M.RESISTOR CH 1/10W 2.2K	1	
R327		ERJ6GEYJ222	M.RESISTOR CH 1/10W 2.2K	1	
R328		ERJ6GEYJ470	M.RESISTOR CH 1/10W 47	1	
R329		ERJ6GEYJ222	M.RESISTOR CH 1/10W 2.2K	1	
R330		ERJ6GEYJ102	M.RESISTOR CH 1/10W 1K	1	
R331		ERJ6GEYG221	M.RESISTOR CH 1/10W 220	1	
R332		ERJ6GEYJ470	M.RESISTOR CH 1/10W 47	1	
R333		ERJ6GEYJ472	M.RESISTOR CH 1/10W 4.7K	1	
R334		ERJ6GEYJ102	M.RESISTOR CH 1/10W 1K	1	
R335,36		ERJ6GEYJ471	M.RESISTOR CH 1/10W 470	2	
R337		ERJ6GEYJ103	M.RESISTOR CH 1/10W 10K	1	
R338		ERJ6GEYJ332	M.RESISTOR CH 1/10W 3.3K	1	
R339		ERJ6GEYJ101	M.RESISTOR CH 1/10W 100	1	
R340		ERJ6GEYJ470	M.RESISTOR CH 1/10W 47	1	
R341		ERJ6GEYJ472	M.RESISTOR CH 1/10W 4.7K	1	
R342		ERJ6GEYJ101	M.RESISTOR CH 1/10W 100	1	
R343		ERJ6GEYJ103	M.RESISTOR CH 1/10W 10K	1	
R344,45		ERJ6GEYJ472	M.RESISTOR CH 1/10W 4.7K	2	
R346		ERJ6GEYJ272	M.RESISTOR CH 1/10W 2.7K	1	
R347		ERJ6GEYJ101	M.RESISTOR CH 1/10W 100	1	
R348		VRE0034E302	M.RESISTOR CH 1/10W 3K	1	
R349		VRE0034E123	M.RESISTOR CH 1/10W 12K	1	
R350		VRE0034E302	M.RESISTOR CH 1/10W 3K	1	
R351		ERJ6GEYJ102	M.RESISTOR CH 1/10W 1K	1	
R352		ERJ6GEYJ470	M.RESISTOR CH 1/10W 47	1	
R353,54		ERJ6GEYJ152	M.RESISTOR CH 1/10W 1.5K	2	
R355		ERJ6GEYJ471	M.RESISTOR CH 1/10W 470	1	
R356		ERJ6GEYJ102	M.RESISTOR CH 1/10W 1K	1	
R357		ERJ6GEYJ152	M.RESISTOR CH 1/10W 1.5K	1	
R358		ERJ6GEYG122	M.RESISTOR CH 1/10W 1.2K	1	
R359,60		ERJ6GEYJ101	M.RESISTOR CH 1/10W 100	2	
R361		ERJ6GEYJ103	M.RESISTOR CH 1/10W 10K	1	
R362		ERJ6GEYJ332	M.RESISTOR CH 1/10W 3.3K	1	
R363,64		ERJ6GEYJ472	M.RESISTOR CH 1/10W 4.7K	2	
R365		VRE0034E123	M.RESISTOR CH 1/10W 12K	1	
R366		ERJ6GEYJ102	M.RESISTOR CH 1/10W 1K	1	
R367		ERJ6GEYJ470	M.RESISTOR CH 1/10W 47	1	
R368,69		ERJ6GEYJ152	M.RESISTOR CH 1/10W 1.5K	2	
R370		ERJ6GEYJ471	M.RESISTOR CH 1/10W 470	1	
R371		ERJ6GEYJ102	M.RESISTOR CH 1/10W 1K	1	
R372		ERJ6GEYJ222	M.RESISTOR CH 1/10W 2.2K	1	
R373		ERJ6GEYG122	M.RESISTOR CH 1/10W 1.2K	1	
R374,75		ERJ6GEYJ101	M.RESISTOR CH 1/10W 100	2	

Ref.No.		Part No.	Part Name & Description	Pcs	Remarks
R376		ERJ6GEYJ103	M.RESISTOR CH 1/10W 10K	1	
R377		ERJ6GEYJ332	M.RESISTOR CH 1/10W 3.3K	1	
R378		ERJ6GEYJ472	M.RESISTOR CH 1/10W 4.7K	1	
R379-81		ERJ6GEYJ103	M.RESISTOR CH 1/10W 10K	3	
R382		ERJ6GEYJ472	M.RESISTOR CH 1/10W 4.7K	1	
R383		VRE0034E302	M.RESISTOR CH 1/10W 3K	1	
R384		VRE0034E123	M.RESISTOR CH 1/10W 12K	1	
R385-87		ERJ6GEY0R00	M.RESISTOR CH 1/10W 0	3	
R391		ERJ6GEYJ222	M.RESISTOR CH 1/10W 2.2K	1	
R392		ERJ6GEYJ102	M.RESISTOR CH 1/10W 1K	1	
R393		ERJ6GEYJ182	M.RESISTOR CH 1/10W 1.8K	1	
R394		ERJ6GEYJ102	M.RESISTOR CH 1/10W 1K	1	
R395		ERJ6GEYJ682	M.RESISTOR CH 1/10W 6.8K	1	
R396		ERJ6GEYG681	M.RESISTOR CH 1/10W 680	1	
R401		ERJ6GEYJ473	M.RESISTOR CH 1/10W 47K	1	
R402		ERJ6GEYJ153	M.RESISTOR CH 1/10W 15K	1	
R403		ERJ6GEYJ152	M.RESISTOR CH 1/10W 1.5K	1	
R405		ERJ6GEYJ103	M.RESISTOR CH 1/10W 10K	1	
R411		ERJ6GEY0R00	M.RESISTOR CH 1/10W 0	1	
R414		ERJ6GEY0R00	M.RESISTOR CH 1/10W 0	1	
R416		ERJ6GEY0R00	M.RESISTOR CH 1/10W 0	1	
R417		ERJ6GEYJ152	M.RESISTOR CH 1/10W 1.5K	1	
R421		ERJ6GEY0R00	M.RESISTOR CH 1/10W 0	1	
R424		ERJ6GEY0R00	M.RESISTOR CH 1/10W 0	1	
R431		ERJ6GEYJ152	M.RESISTOR CH 1/10W 1.5K	1	
R432		ERJ6GEYJ331	M.RESISTOR CH 1/10W 330	1	
R451		ERJ6GEYJ102	M.RESISTOR CH 1/10W 1K	1	
R452		ERJ6GEYJ470	M.RESISTOR CH 1/10W 47	1	
R453		ERJ6GEYJ182	M.RESISTOR CH 1/10W 1.8K	1	
R454,55		ERJ6GEYG223	M.RESISTOR CH 1/10W 22K	2	
R456		ERJ6GEYJ101	M.RESISTOR CH 1/10W 100	1	
R457		ERJ6GEYJ272	M.RESISTOR CH 1/10W 2.7K	1	
R458		ERJ6GEYG223	M.RESISTOR CH 1/10W 22K	1	
R459,60		ERJ6GEYJ101	M.RESISTOR CH 1/10W 100	2	
R461		ERJ6GEYJ472	M.RESISTOR CH 1/10W 4.7K	1	
R462		ERJ6GEYJ332	M.RESISTOR CH 1/10W 3.3K	1	
R463,64		ERJ6GEYJ103	M.RESISTOR CH 1/10W 10K	2	
R465		ERJ6GEYJ472	M.RESISTOR CH 1/10W 4.7K	1	
R466		ERJ6GEYJ103	M.RESISTOR CH 1/10W 10K	1	
R467		ERJ6GEYJ154	M.RESISTOR CH 1/10W 150K	1	
R468		ERJ6GEYJ472	M.RESISTOR CH 1/10W 4.7K	1	
R469,70		ERJ6GEYJ103	M.RESISTOR CH 1/10W 10K	2	
R471		ERJ6GEYG563	M.RESISTOR CH 1/10W 56K	1	
R472		ERJ6GEYJ105	M.RESISTOR CH 1/10W 1M	1	
R473		ERJ6GEYJ561	M.RESISTOR CH 1/10W 560	1	
R474		ERJ6GEYJ102	M.RESISTOR CH 1/10W 1K	1	
R475		ERJ6GEYJ101	M.RESISTOR CH 1/10W 100	1	
R479		ERJ6GEYJ103	M.RESISTOR CH 1/10W 10K	1	
R481		VRE0034E302	M.RESISTOR CH 1/10W 3K	1	
R482		VRE0034E123	M.RESISTOR CH 1/10W 12K	1	
R501		ERJ6GEYJ152	M.RESISTOR CH 1/10W 1.5K	1	
R502		ERJ6GEYJ271	M.RESISTOR CH 1/10W 270	1	
R503		ERJ6GEYJ102	M.RESISTOR CH 1/10W 1K	1	
R504		ERJ6GEYJ271	M.RESISTOR CH 1/10W 270	1	
R505		ERJ6GEYJ102	M.RESISTOR CH 1/10W 1K	1	
R506		ERJ6GEYJ332	M.RESISTOR CH 1/10W 3.3K	1	
R508		ERJ6GEY0R00	M.RESISTOR CH 1/10W 0	1	
R509		ERJ6GEYJ820	M.RESISTOR CH 1/10W 82	1	
R510		ERJ6GEYG301	M.RESISTOR CH 1/10W 300	1	
R511		ERJ6GEYJ470	M.RESISTOR CH 1/10W 47	1	
R512		ERJ6GEYJ272	M.RESISTOR CH 1/10W 2.7K	1	
R513		ERJ6GEYJ472	M.RESISTOR CH 1/10W 4.7K	1	
R514		ERJ6GEYJ470	M.RESISTOR CH 1/10W 47	1	
R515		ERJ6GEYJ153	M.RESISTOR CH 1/10W 15K	1	
R516		ERJ6GEYG681	M.RESISTOR CH 1/10W 680	1	
R517		ERJ6GEYJ332	M.RESISTOR CH 1/10W 3.3K	1	
R518		ERJ6GEYJ103	M.RESISTOR CH 1/10W 10K	1	
R519		ERJ6GEYJ154	M.RESISTOR CH 1/10W 150K	1	
R520		ERJ6GEYJ332	M.RESISTOR CH 1/10W 3.3K	1	
R521		ERJ6GEYG331	M.RESISTOR CH 1/10W 330	1	
R522		ERJ6GEYJ105	M.RESISTOR CH 1/10W 1M	1	
R523		ERJ6GEYJ103	M.RESISTOR CH 1/10W 10K	1	
R524		ERJ6GEYJ472	M.RESISTOR CH 1/10W 4.7K	1	
R525		ERJ6GEYJ103	M.RESISTOR CH 1/10W 10K	1	
R526		ERJ6GEYJ152	M.RESISTOR CH 1/10W 1.5K	1	

Ref.No.		Part No.	Part Name & Description	Pcs	Remarks
R527		ERJ6GEYJ271	M.RESISTOR CH 1/10W 270	1	
R528		ERJ6GEYJ102	M.RESISTOR CH 1/10W 1K	1	
R529		ERJ6GEYJ332	M.RESISTOR CH 1/10W 3.3K	1	
R530		ERJ6GEYJ473	M.RESISTOR CH 1/10W 47K	1	
R531		ERJ6GEYJ820	M.RESISTOR CH 1/10W 82	1	
R532		ERJ6GEYG301	M.RESISTOR CH 1/10W 300	1	
R533,34		ERJ6GEYJ470	M.RESISTOR CH 1/10W 47	2	
R535		ERJ6GEYJ472	M.RESISTOR CH 1/10W 4.7K	1	
R536		ERJ6GEYJ153	M.RESISTOR CH 1/10W 15K	1	
R537		ERJ6GEYJ272	M.RESISTOR CH 1/10W 2.7K	1	
R538		ERJ6GEYG681	M.RESISTOR CH 1/10W 680	1	
R539		ERJ6GEYJ332	M.RESISTOR CH 1/10W 3.3K	1	
R540		ERJ6GEYJ103	M.RESISTOR CH 1/10W 10K	1	
R541		ERJ6GEYJ154	M.RESISTOR CH 1/10W 150K	1	
R542		ERJ6GEYJ332	M.RESISTOR CH 1/10W 3.3K	1	
R543		ERJ6GEYG331	M.RESISTOR CH 1/10W 330	1	
R544		ERJ6GEYJ103	M.RESISTOR CH 1/10W 10K	1	
R545		ERJ6GEYJ105	M.RESISTOR CH 1/10W 1M	1	
R546		ERJ6GEYJ472	M.RESISTOR CH 1/10W 4.7K	1	
R547		ERJ6GEYJ103	M.RESISTOR CH 1/10W 10K	1	
R548		ERJ6GEYJ102	M.RESISTOR CH 1/10W 1K	1	
R549		ERJ6GEYJ473	M.RESISTOR CH 1/10W 47K	1	
R550		ERJ6GEYJ393	M.RESISTOR CH 1/10W 39K	1	
R552-54		ERJ6GEYJ222	M.RESISTOR CH 1/10W 2.2K	3	
R555		ERJ6GEYJ332	M.RESISTOR CH 1/10W 3.3K	1	
R556		ERJ6GEYJ222	M.RESISTOR CH 1/10W 2.2K	1	
R557		ERJ6GEYJ182	M.RESISTOR CH 1/10W 1.8K	1	
R558		ERJ6GEYJ222	M.RESISTOR CH 1/10W 2.2K	1	
R559,60		ERJ6GEY0R00	M.RESISTOR CH 1/10W 0	2	
R562,63		ERJ6GEYJ222	M.RESISTOR CH 1/10W 2.2K	2	
R564		ERJ6GEYJ332	M.RESISTOR CH 1/10W 3.3K	1	
R565		ERJ6GEYJ222	M.RESISTOR CH 1/10W 2.2K	1	
R566		ERJ6GEYJ470	M.RESISTOR CH 1/10W 47	1	
R567		ERJ6GEYJ222	M.RESISTOR CH 1/10W 2.2K	1	
R569		ERJ6GEYJ222	M.RESISTOR CH 1/10W 2.2K	1	
R571		ERJ6GEYJ102	M.RESISTOR CH 1/10W 1K	1	
R572		ERJ6GEYJ181	M.RESISTOR CH 1/10W 180	1	
R573		ERJ6GEYJ101	M.RESISTOR CH 1/10W 100	1	
R574		ERJ6GEYJ102	M.RESISTOR CH 1/10W 1K	1	
R575		ERJ6GEYJ470	M.RESISTOR CH 1/10W 47	1	
R576		ERJ6GEYJ224	M.RESISTOR CH 1/10W 220K	1	
R577		ERJ6GEYJ684	M.RESISTOR CH 1/10W 680K	1	
R578		ERJ6GEYJ103	M.RESISTOR CH 1/10W 10K	1	
R579		ERJ6GEYJ222	M.RESISTOR CH 1/10W 2.2K	1	
R580		ERJ6GEYJ102	M.RESISTOR CH 1/10W 1K	1	
R581		ERJ6GEYJ222	M.RESISTOR CH 1/10W 2.2K	1	
R582-84		ERJ6GEYJ103	M.RESISTOR CH 1/10W 10K	3	
R585,86		ERJ6GEYJ470	M.RESISTOR CH 1/10W 47	2	
R587,88		ERJ6GEYJ104	M.RESISTOR CH 1/10W 100K	2	
R589		ERJ6GEYG221	M.RESISTOR CH 1/10W 220	1	
R591		ERJ6GEYJ222	M.RESISTOR CH 1/10W 2.2K	1	
R592		ERJ6GEYJ102	M.RESISTOR CH 1/10W 1K	1	
R593-95		ERJ6GEYJ222	M.RESISTOR CH 1/10W 2.2K	3	
R596		ERJ6GEYJ332	M.RESISTOR CH 1/10W 3.3K	1	
R597		ERJ6GEYJ222	M.RESISTOR CH 1/10W 2.2K	1	
R598		ERJ6GEY0R00	M.RESISTOR CH 1/10W 0	1	
R601,02		ERJ6GEYJ222	M.RESISTOR CH 1/10W 2.2K	2	
R603-10		ERJ6GEYJ152	M.RESISTOR CH 1/10W 1.5K	8	
R613		VRE0034E361	M.RESISTOR CH 1/10W 360	1	
R614,15		VRE0034E102	M.RESISTOR CH 1/10W 1K	2	
R616		VRE0034E272	M.RESISTOR CH 1/10W 2.7K	1	
R617		VRE0034E202	M.RESISTOR CH 1/10W 2K	1	
R618		VRE0034E152	M.RESISTOR CH 1/10W 1.5K	1	
R620		ERJ6GEYJ102	M.RESISTOR CH 1/10W 1K	1	
R622		ERJ6GEYJ152	M.RESISTOR CH 1/10W 1.5K	1	
R623,24		ERJ6GEYG301	M.RESISTOR CH 1/10W 300	2	
R625		ERJ6GEYJ222	M.RESISTOR CH 1/10W 2.2K	1	
R626,27		ERJ6GEYG681	M.RESISTOR CH 1/10W 680	2	
R628		ERJ6GEYJ472	M.RESISTOR CH 1/10W 4.7K	1	
R630		ERJ6GEYJ222	M.RESISTOR CH 1/10W 2.2K	1	
R631		ERJ6GEYJ470	M.RESISTOR CH 1/10W 47	1	
R632		ERJ6GEYJ472	M.RESISTOR CH 1/10W 4.7K	1	
R633		ERJ6GEYJ272	M.RESISTOR CH 1/10W 2.7K	1	
R634		ERJ6GEYJ822	M.RESISTOR CH 1/10W 8.2K	1	
R635		ERJ6GEYJ222	M.RESISTOR CH 1/10W 2.2K	1	

Ref.No.		Part No.	Part Name & Description	Pcs	Remarks
R636		ERJ6GEYJ681	M.RESISTOR CH 1/10W 680	1	
R638		ERJ6GEYJ332	M.RESISTOR CH 1/10W 3.3K	1	
R640		ERJ6GEYJ101	M.RESISTOR CH 1/10W 100	1	
R641		ERJ6GEYJ102	M.RESISTOR CH 1/10W 1K	1	
R643		ERJ6GEYJ103	M.RESISTOR CH 1/10W 10K	1	
R644		ERJ6GEYJ101	M.RESISTOR CH 1/10W 100	1	
R645		ERJ6GEYJ103	M.RESISTOR CH 1/10W 10K	1	
R646		ERJ6GEYJ101	M.RESISTOR CH 1/10W 100	1	
R647		ERJ6GEYJ222	M.RESISTOR CH 1/10W 2.2K	1	
R648		ERJ6GEYJ330	M.RESISTOR CH 1/10W 33	1	
R656		ERJ6GEYJ471	M.RESISTOR CH 1/10W 470	1	
R658		VRE0034E302	M.RESISTOR CH 1/10W 3K	1	
R659		VRE0034E123	M.RESISTOR CH 1/10W 12K	1	
R701		ERJ6GEYJ103	M.RESISTOR CH 1/10W 10K	1	
R702		ERJ6GEYJ682	M.RESISTOR CH 1/10W 6.8K	1	
R703		ERJ6GEYJ222	M.RESISTOR CH 1/10W 2.2K	1	
R704		ERJ6GEYJ683	M.RESISTOR CH 1/10W 68K	1	
R705		ERJ6GEYJ332	M.RESISTOR CH 1/10W 3.3K	1	
R706,07		ERJ6GEYJ562	M.RESISTOR CH 1/10W 5.6K	2	
R708,09		ERJ6GEYJ332	M.RESISTOR CH 1/10W 3.3K	2	
R710		ERJ6GEYJ392	M.RESISTOR CH 1/10W 3.9K	1	
R711		ERJ6GEYJ103	M.RESISTOR CH 1/10W 10K	1	
R712		ERJ6GEYJ472	M.RESISTOR CH 1/10W 4.7K	1	
R713		ERJ6GEYJ152	M.RESISTOR CH 1/10W 1.5K	1	
R714		ERJ6GEYJ472	M.RESISTOR CH 1/10W 4.7K	1	
R715		ERJ6GEYJ103	M.RESISTOR CH 1/10W 10K	1	
R716		ERJ6GEYJ153	M.RESISTOR CH 1/10W 15K	1	
R717,18		ERJ6GEYJ104	M.RESISTOR CH 1/10W 100K	2	
R719		ERJ6GEYJ123	M.RESISTOR CH 1/10W 12K	1	
R720		ERJ6GEYG223	M.RESISTOR CH 1/10W 22K	1	
R721,22		ERJ6GEYJ103	M.RESISTOR CH 1/10W 10K	2	
R723		ERJ6GEYJ473	M.RESISTOR CH 1/10W 47K	1	
R724		ERJ6GEYJ104	M.RESISTOR CH 1/10W 100K	1	
R725		ERJ6GEYJ222	M.RESISTOR CH 1/10W 2.2K	1	
R726		ERJ6GEYJ472	M.RESISTOR CH 1/10W 4.7K	1	
R727		ERJ6GEYJ103	M.RESISTOR CH 1/10W 10K	1	
R728		ERJ6GEYJ102	M.RESISTOR CH 1/10W 1K	1	
R729		ERJ6GEYJ473	M.RESISTOR CH 1/10W 47K	1	
R731		ERJ6GEYJ393	M.RESISTOR CH 1/10W 39K	1	
R732		ERJ6GEYG223	M.RESISTOR CH 1/10W 22K	1	
R733		ERJ6GEYJ152	M.RESISTOR CH 1/10W 1.5K	1	
R734		ERJ6GEYJ102	M.RESISTOR CH 1/10W 1K	1	
R735,36		ERJ6GEYJ104	M.RESISTOR CH 1/10W 100K	2	
R737		ERJ6GEYJ152	M.RESISTOR CH 1/10W 1.5K	1	
R738,39		ERJ6GEYJ103	M.RESISTOR CH 1/10W 10K	2	
R743,44		ERJ6GEY0R00	M.RESISTOR CH 1/10W 0	2	
R746,47		ERJ6GEY0R00	M.RESISTOR CH 1/10W 0	2	
R748		ERJ6GEYJ103	M.RESISTOR CH 1/10W 10K	1	
R751		ERJ6GEYJ472	M.RESISTOR CH 1/10W 4.7K	1	
R752		ERJ6GEYJ152	M.RESISTOR CH 1/10W 1.5K	1	
R753,54		ERJ6GEYJ332	M.RESISTOR CH 1/10W 3.3K	2	
R755,56		ERJ6GEYJ222	M.RESISTOR CH 1/10W 2.2K	2	
R761		ERJ6GEYJ103	M.RESISTOR CH 1/10W 10K	1	
R762		ERJ6GEYJ822	M.RESISTOR CH 1/10W 8.2K	1	
R763,64		ERJ6GEYJ102	M.RESISTOR CH 1/10W 1K	2	
R765		ERJ6GEYJ332	M.RESISTOR CH 1/10W 3.3K	1	
R766		ERJ6GEYJ470	M.RESISTOR CH 1/10W 47	1	
R781		ERJ6GEYJ102	M.RESISTOR CH 1/10W 1K	1	
R782		ERJ6GEY0R00	M.RESISTOR CH 1/10W 0	1	
R784		ERJ6GEY0R00	M.RESISTOR CH 1/10W 0	1	
R786		ERJ6GEY0R00	M.RESISTOR CH 1/10W 0	1	
R788		ERJ6GEY0R00	M.RESISTOR CH 1/10W 0	1	
R790		ERJ6GEYJ103	M.RESISTOR CH 1/10W 10K	1	
R791		ERJ6GEYJ683	M.RESISTOR CH 1/10W 68K	1	
R792		ERJ6GEYJ104	M.RESISTOR CH 1/10W 100K	1	
R793,94		ERJ6GEYJ682	M.RESISTOR CH 1/10W 6.8K	2	
R795		ERJ6GEYG223	M.RESISTOR CH 1/10W 22K	1	
R796		ERJ6GEYJ391	M.RESISTOR CH 1/10W 390	1	
R797		ERJ6GEYJ152	M.RESISTOR CH 1/10W 1.5K	1	
R798		ERJ6GEYJ562	M.RESISTOR CH 1/10W 5.6K	1	
R799		ERJ6GEYJ152	M.RESISTOR CH 1/10W 1.5K	1	
R800-09		ERJ6GEY0R00	M.RESISTOR CH 1/10W 0	10	

Ref.No.		Part No.	Part Name & Description	Pcs	Remarks
SW101		VSS0126	SWITCH	1	
SW701		VSS0126	SWITCH	1	
TP1,P2		VJR0646	TEST POINT	2	
TP111		VJR0646	TEST POINT	1	
TP201-03		VJR0646	TEST POINT	3	
TP401-05		VJR0646	TEST POINT	5	
TP451,52		VJR0646	TEST POINT	2	
TP501,02		VJR0646	TEST POINT	2	
TP504		VJR0646	TEST POINT	1	
TP601		VJR0646	TEST POINT	1	
TP701-04		VJR0646	TEST POINT	4	
TPG201		VJR0646	TEST POINT	1	
TPG501,02		VJR0646	TEST POINT	2	
VC321		ECV1ZW50X53T	V.CAPACITOR 50P	1	
VL701		VLQ0415	COIL	1	
VR1,R2		VRV0109B102	V.RESISTOR 1K	2	
VR111		VRV0109B202	V.RESISTOR 2K	1	
VR112		VRV0109B502	V.RESISTOR 5K	1	
VR322		VRV0109B202	V.RESISTOR 2K	1	
VR323		VRV0109B102	V.RESISTOR 1K	1	
VR351,52		VRV0109B102	V.RESISTOR 1K	2	
VR366,67		VRV0109B102	V.RESISTOR 1K	2	
VR401		VRV0109B102	V.RESISTOR 1K	1	
VR403		VRV0109B103	V.RESISTOR 10K	1	
VR451		VRV0064B502	V.RESISTOR 5K	1	
VR501,02		VRV0109B202	V.RESISTOR 2K	2	
VR503		VRV0109B102	V.RESISTOR 1K	1	
VR504		VRV0109B202	V.RESISTOR 2K	1	
VR505		VRV0064B202	V.RESISTOR 2K	1	
VR511,12		VRV0109B202	V.RESISTOR 2K	2	
VR601,02		VRV0064B201	V.RESISTOR 200	2	
VR603,04		VRV0109B102	V.RESISTOR 1K	2	
VR701		VRV0064B202	V.RESISTOR 2K	1	
VR702-04		VRV0109B502	V.RESISTOR 5K	3	
VR781		VRV0109B502	V.RESISTOR 5K	1	
X201		VSX0270	CRYSTAL OSCILLATOR	1	
X701		VSX0149	CRYSTAL OSCILLATOR	1	
			MISCELLANEOUS		
		VML2143	CARD PULLER	1	
		VML2144	CARD PULLER	1	
		VMZ1547	BARRIER	1	
		VSC1871	SHIELD CASE	1	
		VSC1872	SHIELD CASE	1	
		VXA3966	P.C.B. SHIELD PLATE	1	
		XYNV3+K6FR	SCREW	5	

Ref.No.		Part No.	Part Name & Description	Pcs	Remarks
	■	VEP82061E	P.C.BOARD W/COMPONENT		FOR AU-65H,AU-62H
			W5 SERVO		
			CAPACITORS		
C1		ECQM1H273JF	P.CAPACITOR 50V 0.027U	1	
C2		ECUM1H152JN	C.CAPACITOR CH 50V 1500P	1	
C3,C4		ECUM1H101JCN	C.CAPACITOR CH 50V 100P	2	
C5		ECEA1CU100	E.CAPACITOR 16V 10U	1	
C6		ECEA0JU101	E.CAPACITOR 6.3V 100U	1	
C7		ECEA1AU470	E.CAPACITOR 10V 47U	1	
C8		ECUM1H103ZFN	C.CAPACITOR CH 50V 0.01U	1	
C9		ECQM1H154JF	P.CAPACITOR 50V 0.15U	1	
C10		ECEA1HN2R2S	E.CAPACITOR 50V 2.2U	1	
C11		ECQM1H223JF	P.CAPACITOR 50V 0.022U	1	
C13		ECQP1H822JZ	P.CAPACITOR 50V 8200P	1	
C14		ECQM1H682JV	P.CAPACITOR 50V 6800P	1	
C15,16		ECUM1H103ZFN	C.CAPACITOR CH 50V 0.01U	2	
C17		ECQM1H394JV	P.CAPACITOR 50V 0.39U	1	
C18		ECEA1HU4R7	E.CAPACITOR 50V 4.7U	1	
C19		ECEA1AU470	E.CAPACITOR 10V 47U	1	
C20,21		ECUM1H103ZFN	C.CAPACITOR CH 50V 0.01U	2	
C22		ECEA1HU2R2	E.CAPACITOR 50V 2.2U	1	
C23,24		ECUM1E104ZFN	C.CAPACITOR CH 25V 0.1U	2	
C25		ECUM1H103ZFN	C.CAPACITOR CH 50V 0.01U	1	
C26		ECEA1AU470	E.CAPACITOR 10V 47U	1	
C27		ECUM1H103ZFN	C.CAPACITOR CH 50V 0.01U	1	
C28		ECEA1AU470	E.CAPACITOR 10V 47U	1	
C29		ECEA1AU330	E.CAPACITOR 10V 33U	1	
C30		ECUM1H103ZFN	C.CAPACITOR CH 50V 0.01U	1	
C31		ECEA1AU330	E.CAPACITOR 10V 33U	1	
C32		ECEA1AU470	E.CAPACITOR 10V 47U	1	
C33		ECUM1H103ZFN	C.CAPACITOR CH 50V 0.01U	1	
C34		ECEA1AU470	E.CAPACITOR 10V 47U	1	
C39		ECUM1H331JCN	C.CAPACITOR CH 50V 330P	1	
C40-42		ECUM1H103ZFN	C.CAPACITOR CH 50V 0.01U	3	
C43		ECUM1H101JCN	C.CAPACITOR CH 50V 100P	1	
C46		ECEA1CU470	E.CAPACITOR 16V 47U	1	
C47,48		ECUM1E104ZFN	C.CAPACITOR CH 25V 0.1U	2	
C101		ECQM1H104JF	P.CAPACITOR 50V 0.1U	1	
C102		ECUM1H151JCN	C.CAPACITOR CH 50V 150P	1	
C103		ECEA1CU470	E.CAPACITOR 16V 47U	1	
C104		ECEA1HU2R2	E.CAPACITOR 50V 2.2U	1	
C105		ECEA1CU101	E.CAPACITOR 16V 100U	1	
C106		ECQM1H104JF	P.CAPACITOR 50V 0.1U	1	
C107		ECUM1H151JCN	C.CAPACITOR CH 50V 150P	1	
C108		ECUM1H102JCN	C.CAPACITOR CH 50V 1000P	1	
C109		ECUM1H221JCN	C.CAPACITOR CH 50V 220P	1	
C110		ECQM1H103JF	P.CAPACITOR 50V 0.01U	1	
C111		ECEA1HU010	E.CAPACITOR 50V 1U	1	
C112		ECQM1H154JF	P.CAPACITOR 50V 0.15U	1	
C113		ECEA1HU010	E.CAPACITOR 50V 1U	1	
C114		ECEA1CU470	E.CAPACITOR 16V 47U	1	
C115		ECUM1H103ZFN	C.CAPACITOR CH 50V 0.01U	1	
C116		ECEA1CU470	E.CAPACITOR 16V 47U	1	
C117		ECUM1H103ZFN	C.CAPACITOR CH 50V 0.01U	1	
C118		ECEA1CU470	E.CAPACITOR 16V 47U	1	
C119		ECUM1H103ZFN	C.CAPACITOR CH 50V 0.01U	1	
C120		ECEA1CU470	E.CAPACITOR 16V 47U	1	
C121		ECUM1H103ZFN	C.CAPACITOR CH 50V 0.01U	1	
C122		ECEA1CU470	E.CAPACITOR 16V 47U	1	
C123		ECUM1H330JCN	C.CAPACITOR CH 50V 33P	1	
C124		ECUM1H103ZFN	C.CAPACITOR CH 50V 0.01U	1	
C125		ECEA1CU470	E.CAPACITOR 16V 47U	1	
C126		ECQM1H562JF	P.CAPACITOR 50V 5600P	1	
C127		ECQM1H393JF	P.CAPACITOR 50V 0.039U	1	
C128		ECQM1H104JF	P.CAPACITOR 50V 0.1U	1	
C129		ECEA1OM22	E.CAPACITOR 10V 22U	1	
C130		ECEA1HU010	E.CAPACITOR 50V 1U	1	

Ref.No.		Part No.	Part Name & Description	Pcs	Remarks
C131		ECEA1EN220S	E.CAPACITOR 25V 22U	1	
C132		ECQM1H103JF	P.CAPACITOR 50V 0.01U	1	
C133-36		ECUM1H103ZFN	C.CAPACITOR CH 50V 0.01U	4	
C137		ECEA1CU101	E.CAPACITOR 16V 100U	1	
C138		ECEA1CU470	E.CAPACITOR 16V 47U	1	
C139		ECQM1H822JF	P.CAPACITOR 50V 8200P	1	
C140		ECUM1H102JCN	C.CAPACITOR CH 50V 1000P	1	
C141		ECEA1HN010S	E.CAPACITOR 50V 1U	1	
C142		ECEA1CU101	E.CAPACITOR 16V 100U	1	
C143		ECEA1CU470	E.CAPACITOR 16V 47U	1	
C144		ECEA1CU220	E.CAPACITOR 16V 22U	1	
C145		ECEA1AU470	E.CAPACITOR 10V 47U	1	
C146		ECUM1H103ZFN	C.CAPACITOR CH 50V 0.01U	1	
C147		ECEA1HUR47	E.CAPACITOR 50V 0.47U	1	
C148		ECEA1CU470	E.CAPACITOR 16V 47U	1	
C149,50		ECUM1H103ZFN	C.CAPACITOR CH 50V 0.01U	2	
C151		ECEA1HN010S	E.CAPACITOR 50V 1U	1	
C152,53		ECUM1H103ZFN	C.CAPACITOR CH 50V 0.01U	2	
C154		ECUM1H152KBN	C.CAPACITOR CH 50V 1500P	1	
C155		ECEA1HN100S	E.CAPACITOR 50V 10U	1	
C156		ECEA1HUR47	E.CAPACITOR 50V 0.47U	1	
C157,58		ECUM1H103ZFN	C.CAPACITOR CH 50V 0.01U	2	
C159		ECQM1H104JF	P.CAPACITOR 50V 0.1U	1	
C160		ECUM1H103ZFN	C.CAPACITOR CH 50V 0.01U	1	
C161		ECQM1H104JF	P.CAPACITOR 50V 0.1U	1	
C162,63		ECQM1H103JF	P.CAPACITOR 50V 0.01U	2	
C164		ECEA1HU4R7	E.CAPACITOR 50V 4.7U	1	
C165-67		ECUM1H103ZFN	C.CAPACITOR CH 50V 0.01U	3	
C168		ECEA1EU100	E.CAPACITOR 25V 10U	1	
C169		ECQM1H103JF	P.CAPACITOR 50V 0.01U	1	
C170		ECUM1H471JCN	C.CAPACITOR CH 50V 470P	1	
C171,72		ECUM1H103ZFN	C.CAPACITOR CH 50V 0.01U	2	
C173		ECUM1H101JCN	C.CAPACITOR CH 50V 100P	1	
C174		ECUM1H103ZFN	C.CAPACITOR CH 50V 0.01U	1	
C175		ECEA1HU2R2	E.CAPACITOR 50V 2.2U	1	
C176		ECEA1CU470	E.CAPACITOR 16V 47U	1	
C177		ECQM1H222JF	P.CAPACITOR 50V 2200P	1	
C179		ECUM1H221JCN	C.CAPACITOR CH 50V 220P	1	
C301		ECEA1AU330	E.CAPACITOR 10V 33U	1	
C302		ECUM1H103ZFN	C.CAPACITOR CH 50V 0.01U	1	
C303		ECQM1H562JF	P.CAPACITOR 50V 5600P	1	
C304		ECQM1H392JF	P.CAPACITOR 50V 3900P	1	
C305		ECUM1H103ZFN	C.CAPACITOR CH 50V 0.01U	1	
C306		ECQM1H123JF	P.CAPACITOR 50V 0.012U	1	
C307		ECEA1CN470S	E.CAPACITOR 16V 47U	1	
C308		ECEA0JU221	E.CAPACITOR 6.3V 220U	1	
C309		ECEA1HU2R2	E.CAPACITOR 50V 2.2U	1	
C310		ECQM1H104JF	P.CAPACITOR 50V 0.1U	1	
C311		ECUM1H153KBN	C.CAPACITOR CH 50V 0.015U	1	
C312		ECEA1HN010S	E.CAPACITOR 50V 1U	1	
C313,14		ECUM1H103ZFN	C.CAPACITOR CH 50V 0.01U	2	
C315		ECQM1H104JF	P.CAPACITOR 50V 0.1U	1	
C316		ECUM1E273KBN	C.CAPACITOR CH 25V 0.027U	1	
C317		ECEA1HN2R2S	E.CAPACITOR 50V 2.2U	1	
C318-20		ECUM1H103ZFN	C.CAPACITOR CH 50V 0.01U	3	
C321		ECEA1CU100	E.CAPACITOR 16V 10U	1	
C322		ECEA0JU470	E.CAPACITOR 6.3V 47U	1	
C323		ECUM1H103ZFN	C.CAPACITOR CH 50V 0.01U	1	
C324		ECEA0JU471	E.CAPACITOR 6.3V 470U	1	
C327		ECEA1HU2R2	E.CAPACITOR 50V 2.2U	1	
C330-36		ECUM1H103ZFN	C.CAPACITOR CH 50V 0.01U	7	
C338		ECEA1CU100	E.CAPACITOR 16V 10U	1	
C342		ECQM1H104JF	P.CAPACITOR 50V 0.1U	1	
C401-03		ECUM1H103ZFN	C.CAPACITOR CH 50V 0.01U	3	
C406-10		ECUM1H103ZFN	C.CAPACITOR CH 50V 0.01U	5	
C454		ECUM1H103ZFN	C.CAPACITOR CH 50V 0.01U	1	
C492		ECUM1H103ZFN	C.CAPACITOR CH 50V 0.01U	1	
C495,96		ECUM1H103ZFN	C.CAPACITOR CH 50V 0.01U	2	
C501		ECUM1H103ZFN	C.CAPACITOR CH 50V 0.01U	1	
C502		ECEA1CU470	E.CAPACITOR 16V 47U	1	
C503		ECEA1ESS471	E.CAPACITOR 25V 470U	1	
C504		ECUM1E473KBN	C.CAPACITOR CH 25V 0.047U	1	
C505		ECUM1H561JCN	C.CAPACITOR CH 50V 560P	1	
C506		ECUM1H820JCN	C.CAPACITOR CH 50V 82P	1	
C507		ECUM1H561JCN	C.CAPACITOR CH 50V 560P	1	

Ref.No.		Part No.	Part Name & Description	Pcs	Remarks
C508		ECEA1HU010	E.CAPACITOR 50V 1U	1	
C509-13		ECEA1ESS101	E.CAPACITOR 25V 100U	5	
C514		ECQM1H104JF	P.CAPACITOR 50V 0.1U	1	
C515		ECEA1EU4R7	E.CAPACITOR 25V 4.7U	1	
C516-18		ECEA1HN4R7S	E.CAPACITOR 50V 4.7U	3	
C519		ECEA1HU010	E.CAPACITOR 50V 1U	1	
C520-22		ECUM1H103KBN	C.CAPACITOR CH 50V 0.01U	3	
C523		ECQM1H104JF	P.CAPACITOR 50V 0.1U	1	
C524		ECEA1EU4R7	E.CAPACITOR 25V 4.7U	1	
C525,26		ECEA1HN4R7S	E.CAPACITOR 50V 4.7U	2	
C527		ECQM1H104JF	P.CAPACITOR 50V 0.1U	1	
C528		ECEA1HU010	E.CAPACITOR 50V 1U	1	
C529-31		ECUM1H103KBN	C.CAPACITOR CH 50V 0.01U	3	
C532		ECEA1EU4R7	E.CAPACITOR 25V 4.7U	1	
C533,34		ECEA1HN4R7S	E.CAPACITOR 50V 4.7U	2	
C535		ECQB1H224JF	P.CAPACITOR 50V 0.22U	1	
C536		ECEA1HU010	E.CAPACITOR 50V 1U	1	
C537-39		ECUM1H103KBN	C.CAPACITOR CH 50V 0.01U	3	
C540		ECEA1EU4R7	E.CAPACITOR 25V 4.7U	1	
C541-43		ECEA1HN4R7S	E.CAPACITOR 50V 4.7U	3	
C544		ECQB1H224JF	P.CAPACITOR 50V 0.22U	1	
C545		ECEA1HU010	E.CAPACITOR 50V 1U	1	
C546-48		ECUM1H103KBN	C.CAPACITOR CH 50V 0.01U	3	
C549		ECEA1AU470	E.CAPACITOR 10V 47U	1	
C550		ECUM1E473KBN	C.CAPACITOR CH 25V 0.047U	1	
C551		ECEA1HN4R7S	E.CAPACITOR 50V 4.7U	1	
C552		ECQM1H104JF	P.CAPACITOR 50V 0.1U	1	
C553		ECEA1HN4R7S	E.CAPACITOR 50V 4.7U	1	
C558-63		ECQM1H104JF	P.CAPACITOR 50V 0.1U	6	
C600		ECUM1H680JCN	C.CAPACITOR CH 50V 68P	1	
C601		ECUM1H050DCN	C.CAPACITOR CH 50V 50P	1	
C602		ECUM1H680JCN	C.CAPACITOR CH 50V 68P	1	
C603		ECUM1H050DCN	C.CAPACITOR CH 50V 50P	1	
C900-11		ECUM1H103ZFN	C.CAPACITOR CH 50V 0.01U	12	
D1		MA151K	DIODE	1	
D4		MA151K	DIODE	1	
D101		MA151K	DIODE	1	
D102		MA153	DIODE	1	
D103		MA151WK	DIODE	1	
D104		MA151K	DIODE	1	
D105		MA151WK	DIODE	1	
D106,07		MA151WA	DIODE	2	
D108		MA151K	DIODE	1	
D109		MA151WK	DIODE	1	
D110,11		MA153	DIODE	2	
D112		MA151WK	DIODE	1	
D113,14		MA151K	DIODE	2	
D115		MA153	DIODE	1	
D116		MA151K	DIODE	1	
D119		MA151WK	DIODE	1	
D120-22		MA151WA	DIODE	3	
D123		MA151K	DIODE	1	
D125		MA151K	DIODE	1	
D126,27		MA153	DIODE	2	
D128		MA151WA	DIODE	1	
D129		MA151K	DIODE	1	
D302		MA151K	DIODE	1	
D303		MA151WK	DIODE	1	
D304		MA151WA	DIODE	1	
D305		MA151K	DIODE	1	
D307		MA151WA	DIODE	1	
D309		MA151WK	DIODE	1	
D310		MA151K	DIODE	1	
D313		MA151WA	DIODE	1	
D314-17		MA151WK	DIODE	4	
D318		MA151K	DIODE	1	
D319,20		MA151WK	DIODE	2	
D321,22		MA151K	DIODE	2	
D323,24		MA151WK	DIODE	2	
D325		MA151K	DIODE	1	
D330		MA151K	DIODE	1	
D333		MA151WK	DIODE	1	

Ref.No.		Part No.	Part Name & Description	Pcs	Remarks
D334,35		MA151K	DIODE	2	
D337		ERJ6GEYJ824	M.RESISTOR CH 1/10W 820K	1	
D338		MA151K	DIODE	1	
D340		MA151WA	DIODE	1	
D341		MA151K	DIODE	1	
D345,46		MA151WA	DIODE	2	
D349		MA151WK	DIODE	1	
D351		MA151K	DIODE	1	
D501		MA151K	DIODE	1	
D502		MA151WK	DIODE	1	
D503		MA153	DIODE	1	
D504		MA151WK	DIODE	1	
D505,06		MA151K	DIODE	2	
D507		MA151WK	DIODE	1	
D508,09		MA151K	DIODE	2	
D510		MA151WK	DIODE	1	
D511		MA151K	DIODE	1	
D514-17		MA701A	DIODE	4	
D572		MA151K	DIODE	1	
IC1		LM2904M	IC	1	
IC2		LM2903M	IC	1	
IC3		LM2904M	IC	1	
IC4		NJM4558M	IC	1	
IC5		MC14538BF	IC	1	
IC6		UPD65031F405	IC	1	
IC7		MN53015VZW	IC	1	
IC8		MC14049UBF	IC	1	
IC9		MC14013BF	IC	1	
IC10		MM74HC221AM	IC	1	
IC11		AN78L05	IC	1	
IC12		MC14021BF	IC	1	
IC13		MC14094BF	IC	1	
IC14		MC14053BF	IC	1	(R)
IC15		MC14049UBF	IC	1	
IC16		MC14050BF	IC	1	
IC17		SN74LS01NS	IC	1	
IC18		MN51020VZZ	IC	1	
IC101		LM2904M	IC	1	
IC102		LM2903M	IC	1	
IC103		LM2904M	IC	1	
IC104		MC14538BF	IC	1	
IC105		AN79L09	IC	1	
IC106		AN78N09	IC	1	
IC107		DN74LS293S	IC	1	
IC108		MC74HC00AF	IC	1	
IC109		MN6064R	IC	1	
IC110		MN6168VIA	IC	1	
IC111		MC74HCU04F	IC	1	
IC112		MC14049UBF	IC	1	
IC113,14		LM2904M	IC	2	
IC115		LM2903M	IC	1	
IC116,17		LM2904M	IC	2	
IC118-20		MC14066BF	IC	3	
IC121		MC14052BF	IC	1	
IC122,23		MC14053BF	IC	2	(R)
IC124		MN53030VYA	IC	1	
IC125		MN53007VYC	IC	1	
IC126		UPC4558G2	IC	1	
IC128		NJM4558M	IC	1	
IC129		MC14538BF	IC	1	
IC130		MC14013BF	IC	1	
IC131		LM2904M	IC	1	
IC132		UPC4558G2	IC	1	
IC133		MN4030BS	IC	1	
IC134		MC14538BF	IC	1	
IC135		MC14053BF	IC	1	(R)
IC136		MC74HC02AF	IC	1	
IC137		MC14538BF	IC	1	
IC301		AN78L05	IC	1	
IC302		LM2904M	IC	1	
IC303		LM2902M	IC	1	
IC304		MC14053BF	IC	1	(R)

Ref.No.		Part No.	Part Name & Description	Pcs	Remarks
IC305		MC14066BF	IC	1	
IC306		LM2904M	IC	1	
IC307		LM2902M	IC	1	
IC308,09		LM2904M	IC	2	
IC310-13		MC14066BF	IC	4	
IC314		MC14028BF	IC	1	
IC315		MC14081BF	IC	1	
IC316		NJM2901M	IC	1	
IC318		MC14538BF	IC	1	
IC319		MC14049UBF	IC	1	
IC501		BA6149LS	IC	1	
IC502		PU4213	IC	1	
IC503-06		AN3821K	IC	4	
IC600,01		MC74HCU04F	IC	2	
IC800		LM2904M	IC	1	
L1		VLP0017	COIL	1	
L2-L4		VLQEL05S221J	COIL 220UH	3	
L101,02		VLQEL05S221J	COIL 220UH	2	
L501		VLQ0214	COIL 50UH	1	
L504-07		VLQ0129	COIL 300UH	4	
Q1,Q2		UN2213	TRANSISTOR-RESISTOR	2	
Q5-Q9		UN2213	TRANSISTOR-RESISTOR	5	
Q12-16		UN2213	TRANSISTOR-RESISTOR	5	
Q101		2SD601-R	TRANSISTOR CHIP	1	(Q,R)
Q102		UN2213	TRANSISTOR-RESISTOR	1	
Q103		2SJ43	TRANSISTOR	1	
Q104		UN2213	TRANSISTOR-RESISTOR	1	
Q105		2SD601-R	TRANSISTOR CHIP	1	(Q,R)
Q106-08		UN2213	TRANSISTOR-RESISTOR	3	
Q109		2SD601-R	TRANSISTOR CHIP	1	(Q,R)
Q110-19		UN2213	TRANSISTOR-RESISTOR	10	
Q120		2SD601-R	TRANSISTOR CHIP	1	(Q,R)
Q121		UN2213	TRANSISTOR-RESISTOR	1	
Q122		2SD601-R	TRANSISTOR CHIP	1	(Q,R)
Q123,24		UN2213	TRANSISTOR-RESISTOR	2	
Q125		2SB709-R	TRANSISTOR CHIP	1	(Q,R)
Q126		2SD601-R	TRANSISTOR CHIP	1	(Q,R)
Q127		UN2115	COMBINATION PARTS	1	
Q128		UN2213	TRANSISTOR-RESISTOR	1	
Q129		UN2214	TRANSISTOR-RESISTOR	1	
Q130		2SK374	TRANSISTOR	1	
Q131-33		UN2213	TRANSISTOR-RESISTOR	3	
Q134,35		2SB709-R	TRANSISTOR CHIP	2	(Q,R)
Q136-39		UN2213	TRANSISTOR-RESISTOR	4	
Q301,02		UN2213	TRANSISTOR-RESISTOR	2	
Q303		UN2113	TRANSISTOR-RESISTOR	1	
Q304		UN2213	TRANSISTOR-RESISTOR	1	
Q305		UN2113	TRANSISTOR-RESISTOR	1	
Q306-08		UN2213	TRANSISTOR-RESISTOR	3	
Q312-14		UN2213	TRANSISTOR-RESISTOR	3	
Q316		2SD601-R	TRANSISTOR CHIP	1	(Q,R)
Q317		UN2213	TRANSISTOR-RESISTOR	1	
Q319		2SD601-R	TRANSISTOR CHIP	1	(Q,R)
Q320		UN2213	TRANSISTOR-RESISTOR	1	
Q336,37		UN2213	TRANSISTOR-RESISTOR	2	
Q340		UN2213	TRANSISTOR-RESISTOR	1	
Q343		UN2213	TRANSISTOR-RESISTOR	1	
Q346,47		UN2213	TRANSISTOR-RESISTOR	2	
Q501-04		2SB709-R	TRANSISTOR CHIP	4	(Q,R)
Q505		UN2113	TRANSISTOR-RESISTOR	1	
Q506		UN2213	TRANSISTOR-RESISTOR	1	
Q507		UN2113	TRANSISTOR-RESISTOR	1	
Q508,09		UN2213	TRANSISTOR-RESISTOR	2	
			RESISTORS		
R1		ERJ6GEYJ103	M.RESISTOR CH 1/10W 10K	1	
R2		ERJ6GEYJ683	M.RESISTOR CH 1/10W 68K	1	

Ref.No.		Part No.	Part Name & Description	Pcs	Remarks
R3		ERJ6GEYJ103	M.RESISTOR CH 1/10W 10K	1	
R4		ERJ6GEYJ105	M.RESISTOR CH 1/10W 1M	1	
R5,R6		ERJ6GEYJ103	M.RESISTOR CH 1/10W 10K	2	
R7		ERJ6GEYJ155	M.RESISTOR CH 1/10W 1M	1	
R8		ERJ6GEYJ103	M.RESISTOR CH 1/10W 10K	1	
R9		ERJ6GEYJ125	M.RESISTOR CH 1/10W 1.2M	1	
R10		ERJ6GEYG563	M.RESISTOR CH 1/10W 56K	1	
R11,12		VRE0034E102	M.RESISTOR CH 1/10W 1K	2	
R13		ERJ6GEYJ123	M.RESISTOR CH 1/10W 12K	1	
R14		ERJ6GEYJ823	M.RESISTOR CH 1/10W 82K	1	
R15		ERJ6GEYJ393	M.RESISTOR CH 1/10W 39K	1	
R16		ERJ6GEYJ824	M.RESISTOR CH 1/10W 820K	1	
R17		ERJ6GEYJ822	M.RESISTOR CH 1/10W 8.2K	1	
R18		ERJ6GEYJ183	M.RESISTOR CH 1/10W 18K	1	
R19		ERJ6GEYJ882	M.RESISTOR CH1/10W 8.8K	1	
R20		ERJ6GEYJ822	M.RESISTOR CH 1/10W 8.2K	1	
R21		ERJ6GEYJ104	M.RESISTOR CH 1/10W 100K	1	
R22		ERJ6GEYJ472	M.RESISTOR CH 1/10W 4.7K	1	
R23		ERJ6GEYJ103	M.RESISTOR CH 1/10W 10K	1	
R24		ERJ6GEYG563	M.RESISTOR CH 1/10W 56K	1	
R25		ERJ6GEYJ102	M.RESISTOR CH 1/10W 1K	1	
R27		ERJ6GEYJ123	M.RESISTOR CH 1/10W 12K	1	
R28-31		ERJ6GEYG563	M.RESISTOR CH 1/10W 56K	4	
R34,35		ERJ6GEYJ103	M.RESISTOR CH 1/10W 10K	2	
R36		ERJ6GEYJ562	M.RESISTOR CH 1/10W 5.6K	1	
R37-44		ERJ6GEYG563	M.RESISTOR CH 1/10W 56K	8	
R45		ERJ6GEYJ104	M.RESISTOR CH 1/10W 100K	1	
R50		ERJ6GEYG563	M.RESISTOR CH 1/10W 56K	1	
R51		ERJ6GEYJ103	M.RESISTOR CH 1/10W 10K	1	
R52		ERJ6GEYJ474	M.RESISTOR CH 1/10W 470K	1	
R53		ERJ6GEYG563	M.RESISTOR CH 1/10W 56K	1	
R54		ERJ6GEYJ103	M.RESISTOR CH 1/10W 10K	1	
R55		ERJ6GEYJ474	M.RESISTOR CH 1/10W 470K	1	
R56		ERJ6GEYG563	M.RESISTOR CH 1/10W 56K	1	
R57		ERJ6GEYJ103	M.RESISTOR CH 1/10W 10K	1	
R58		ERJ6GEYJ474	M.RESISTOR CH 1/10W 470K	1	
R59		ERJ6GEYJ103	M.RESISTOR CH 1/10W 10K	1	
R60		ERJ6GEYJ102	M.RESISTOR CH 1/10W 1K	1	
R61		ERJ6GEYG223	M.RESISTOR CH 1/10W 22K	1	
R62		ERJ6GEYJ103	M.RESISTOR CH 1/10W 10K	1	
R64		ERJ6GEYJ153	M.RESISTOR CH 1/10W 15K	1	
R65		ERJ6GEYJ683	M.RESISTOR CH 1/10W 68K	1	
R69,70		ERJ6GEYJ102	M.RESISTOR CH 1/10W 1K	2	
R101		ERJ6GEYJ103	M.RESISTOR CH 1/10W 10K	1	
R102		ERJ6GEYJ184	M.RESISTOR CH 1/10W 180K	1	
R103		ERJ6GEYJ102	M.RESISTOR CH 1/10W 1K	1	
R104		ERJ6GEYJ474	M.RESISTOR CH 1/10W 470K	1	
R105-07		ERJ6GEYJ103	M.RESISTOR CH 1/10W 10K	3	
R108		ERJ6GEYJ184	M.RESISTOR CH 1/10W 180K	1	
R109		ERJ6GEYJ102	M.RESISTOR CH 1/10W 1K	1	
R110		ERJ6GEYJ474	M.RESISTOR CH 1/10W 470K	1	
R111		ERJ6GEYJ103	M.RESISTOR CH 1/10W 10K	1	
R112		ERJ6GEYJ153	M.RESISTOR CH 1/10W 15K	1	
R113		ERJ6GEYJ562	M.RESISTOR CH 1/10W 5.6K	1	
R114		ERJ6GEYJ224	M.RESISTOR CH 1/10W 220K	1	
R115		ERJ6GEYJ682	M.RESISTOR CH 1/10W 6.8K	1	
R116		ERJ6GEYJ153	M.RESISTOR CH 1/10W 15K	1	
R117		ERJ6GEYJ104	M.RESISTOR CH 1/10W 100K	1	
R118		ERJ6GEYJ103	M.RESISTOR CH 1/10W 10K	1	
R119		ERJ6GEYJ153	M.RESISTOR CH 1/10W 15K	1	
R120-22		ERJ6GEYJ103	M.RESISTOR CH 1/10W 10K	3	
R123		ERJ6GEYJ105	M.RESISTOR CH 1/10W 1M	1	
R124		ERJ6GEYJ272	M.RESISTOR CH 1/10W 2.7K	1	
R125		ERJ6GEYJ103	M.RESISTOR CH 1/10W 10K	1	
R126-32		ERJ6GEYG563	M.RESISTOR CH 1/10W 56K	7	
R133,34		ERJ6GEYJ103	M.RESISTOR CH 1/10W 10K	2	
R135,36		ERJ6GEYG563	M.RESISTOR CH 1/10W 56K	2	
R137		ERJ6GEYJ103	M.RESISTOR CH 1/10W 10K	1	
R138		ERJ6GEYG563	M.RESISTOR CH 1/10W 56K	1	
R139		ERJ6GEYJ224	M.RESISTOR CH 1/10W 220K	1	
R140		ERJ6GEYG563	M.RESISTOR CH 1/10W 56K	1	
R141		ERJ6GEYJ224	M.RESISTOR CH 1/10W 220K	1	
R142		ERJ6GEYG563	M.RESISTOR CH 1/10W 56K	1	
R143		ERJ6GEYG223	M.RESISTOR CH 1/10W 22K	1	
R144		ERJ6GEYJ103	M.RESISTOR CH 1/10W 10K	1	

Ref.No.		Part No.	Part Name & Description	Pcs	Remarks
R145		ERJ6GEYG563	M.RESISTOR CH 1/10W 56K	1	
R146		ERJ6GEYJ562	M.RESISTOR CH 1/10W 5.6K	1	
R147,48		ERJ6GEYJ273	M.RESISTOR CH 1/10W 27K	2	
R149		ERJ6GEYJ104	M.RESISTOR CH 1/10W 100K	1	
R150		ERJ6GEYJ183	M.RESISTOR CH 1/10W 18K	1	
R151		ERJ6GEYJ103	M.RESISTOR CH 1/10W 10K	1	
R152		ERJ6GEYJ824	M.RESISTOR CH 1/10W 820K	1	
R153		ERJ6GEYJ562	M.RESISTOR CH 1/10W 5.6K	1	
R154-56		ERJ6GEYJ393	M.RESISTOR CH 1/10W 39K	3	
R157,58		ERJ6GEYJ183	M.RESISTOR CH 1/10W 18K	2	
R159		ERJ6GEYJ682	M.RESISTOR CH 1/10W 6.8K	1	
R160		ERJ6GEYJ183	M.RESISTOR CH 1/10W 18K	1	
R161		ERJ6GEYJ103	M.RESISTOR CH 1/10W 10K	1	
R162		ERJ6GEYG563	M.RESISTOR CH 1/10W 56K	1	
R163		ERJ6GEYJ103	M.RESISTOR CH 1/10W 10K	1	
R164		ERJ6GEYJ562	M.RESISTOR CH 1/10W 5.6K	1	
R165		ERJ6GEYG563	M.RESISTOR CH 1/10W 56K	1	
R166		ERJ6GEYJ272	M.RESISTOR CH 1/10W 2.7K	1	
R167		ERJ6GEYJ333	M.RESISTOR CH 1/10W 33K	1	
R168		ERJ6GEYJ473	M.RESISTOR CH 1/10W 47K	1	
R169		ERJ6GEYJ183	M.RESISTOR CH 1/10W 18K	1	
R170,71		ERJ6GEYG563	M.RESISTOR CH 1/10W 56K	2	
R172		ERJ6GEYJ102	M.RESISTOR CH 1/10W 1K	1	
R181,82		ERJ6GEYG563	M.RESISTOR CH 1/10W 56K	2	
R183		ERJ6GEYJ102	M.RESISTOR CH 1/10W 1K	1	
R184		ERJ6GEYG563	M.RESISTOR CH 1/10W 56K	1	
R185		ERJ6GEYJ104	M.RESISTOR CH 1/10W 100K	1	
R186		ERJ6GEYJ102	M.RESISTOR CH 1/10W 1K	1	
R187,88		ERJ6GEYJ822	M.RESISTOR CH 1/10W 8.2K	2	
R189		ERJ6GEYJ561	M.RESISTOR CH 1/10W 560	1	
R190		ERJ6GEYJ472	M.RESISTOR CH 1/10W 4.7K	1	
R191,92		ERJ6GEYG563	M.RESISTOR CH 1/10W 56K	2	
R193,94		ERJ6GEYJ273	M.RESISTOR CH 1/10W 27K	2	
R195		ERJ6GEYJ562	M.RESISTOR CH 1/10W 5.6K	1	
R196		ERJ6GEYJ153	M.RESISTOR CH 1/10W 15K	1	
R197		ERJ6GEYJ332	M.RESISTOR CH 1/10W 3.3K	1	
R198		ERJ6GEYJ561	M.RESISTOR CH 1/10W 560	1	
R199		ERJ6GEYJ273	M.RESISTOR CH 1/10W 27K	1	
R200		ERJ6GEYG223	M.RESISTOR CH 1/10W 22K	1	
R201		ERJ6GEYJ473	M.RESISTOR CH 1/10W 47K	1	
R202		ERJ6GEYJ562	M.RESISTOR CH 1/10W 5.6K	1	
R203		ERJ6GEYJ561	M.RESISTOR CH 1/10W 560	1	
R204		ERJ6GEYJ562	M.RESISTOR CH 1/10W 5.6K	1	
R205		ERJ6GEYJ101	M.RESISTOR CH 1/10W 100	1	
R206		ERJ6GEYJ104	M.RESISTOR CH 1/10W 100K	1	
R207-09		ERJ6GEYJ102	M.RESISTOR CH 1/10W 1K	3	
R210		ERJ6GEYJ153	M.RESISTOR CH 1/10W 15K	1	
R211		ERJ6GEYJ183	M.RESISTOR CH 1/10W 18K	1	
R212		ERJ6GEYJ683	M.RESISTOR CH 1/10W 68K	1	
R213-15		ERJ6GEYG563	M.RESISTOR CH 1/10W 56K	3	
R216		ERJ6GEYJ105	M.RESISTOR CH 1/10W 1M	1	
R218		ERJ6GEYG563	M.RESISTOR CH 1/10W 56K	1	
R219		ERJ6GEYJ103	M.RESISTOR CH 1/10W 10K	1	
R220		ERJ6GEYJ104	M.RESISTOR CH 1/10W 100K	1	
R222-27		ERJ6GEYG563	M.RESISTOR CH 1/10W 56K	6	
R228		ERJ6GEYJ104	M.RESISTOR CH 1/10W 100K	1	
R229		ERJ6GEYG223	M.RESISTOR CH 1/10W 22K	1	
R230		ERJ6GEYG563	M.RESISTOR CH 1/10W 56K	1	
R231		ERJ6GEYJ104	M.RESISTOR CH 1/10W 100K	1	
R232		VRE0034E272	M.RESISTOR CH 1/10W 2.7K	1	
R233		VRE0034E104	M.RESISTOR CH 1/10W 100K	1	
R234		VRE0034E272	M.RESISTOR CH 1/10W 2.7K	1	
R235		VRE0034E104	M.RESISTOR CH 1/10W 100K	1	
R236		ERJ6GEYG563	M.RESISTOR CH 1/10W 56K	1	
R237		ERJ6GEYJ824	M.RESISTOR CH 1/10W 820K	1	
R238		ERJ6GEYJ102	M.RESISTOR CH 1/10W 1K	1	
R239		ERJ6GEYJ103	M.RESISTOR CH 1/10W 10K	1	
R240		ERJ6GEYJ222	M.RESISTOR CH 1/10W 2.2K	1	
R241		ERJ6GEYJ104	M.RESISTOR CH 1/10W 100K	1	
R242		ERJ6GEYJ334	M.RESISTOR CH 1/10W 330K	1	
R243		ERJ6GEYJ101	M.RESISTOR CH 1/10W 100	1	
R244,45		ERJ6GEYJ103	M.RESISTOR CH 1/10W 10K	2	
R246		ERJ6GEYJ102	M.RESISTOR CH 1/10W 1K	1	
R247		ERJ6GEYJ103	M.RESISTOR CH 1/10W 10K	1	
R248		ERJ6GEYJ562	M.RESISTOR CH 1/10W 5.6K	1	

Ref.No.		Part No.	Part Name & Description	Pcs	Remarks
R249		ERJ6GEYJ392	M.RESISTOR CH 1/10W 3.9K	1	
R250		ERJ6GEYJ184	M.RESISTOR CH 1/10W 180K	1	
R251		ERJ6GEYJ224	M.RESISTOR CH 1/10W 220K	1	
R252		ERJ6GEYJ153	M.RESISTOR CH 1/10W 15K	1	
R253		ERJ6GEYJ564	M.RESISTOR CH 1/10W 560K	1	
R254-58		ERJ6GEYJ103	M.RESISTOR CH 1/10W 10K	5	
R259		ERJ6GEYG223	M.RESISTOR CH 1/10W 22K	1	
R260		ERJ6GEYJ393	M.RESISTOR CH 1/10W 39K	1	
R261		ERJ6GEYJ823	M.RESISTOR CH 1/10W 82K	1	
R262		ERJ6GEYJ123	M.RESISTOR CH 1/10W 12K	1	
R263		ERJ6GEYJ183	M.RESISTOR CH 1/10W 18K	1	
R264		ERJ6GEYJ333	M.RESISTOR CH 1/10W 33K	1	
R265		ERJ6GEYJ683	M.RESISTOR CH 1/10W 68K	1	
R266-69		ERJ6GEYG563	M.RESISTOR CH 1/10W 56K	4	
R270		ERJ6GEYJ562	M.RESISTOR CH 1/10W 5.6K	1	
R271		ERJ6GEYJ103	M.RESISTOR CH 1/10W 10K	1	
R273		ERJ6GEYJ393	M.RESISTOR CH 1/10W 39K	1	
R274		ERJ6GEYJ181	M.RESISTOR CH 1/10W 180	1	
R275		ERJ6GEYG563	M.RESISTOR CH 1/10W 56K	1	
R276,77		VRE0034E102	M.RESISTOR CH 1/10W 1K	2	
R278		ERJ6GEYJ472	M.RESISTOR CH 1/10W 4.7K	1	
R279-81		ERJ6GEYG563	M.RESISTOR CH 1/10W 56K	3	
R282		ERJ6GEYJ124	M.RESISTOR CH 1/10W 120K	1	
R283		ERJ6GEYJ103	M.RESISTOR CH 1/10W 10K	1	
R284		ERJ6GEYJ272	M.RESISTOR CH 1/10W 2.7K	1	
R285		ERJ6GEYJ122	M.RESISTOR CH 1/10W 1.2K	1	
R286,87		ERJ6GEYJ472	M.RESISTOR CH 1/10W 4.7K	2	
R288		ERJ6GEYJ473	M.RESISTOR CH 1/10W 47K	1	
R289		ERJ6GEYJ823	M.RESISTOR CH 1/10W 82K	1	
R301		ERJ6GEYG563	M.RESISTOR CH 1/10W 56K	1	
R302,03		ERJ6GEYJ103	M.RESISTOR CH 1/10W 10K	2	
R304		ERJ6GEYG563	M.RESISTOR CH 1/10W 56K	1	
R305		ERJ6GEYJ104	M.RESISTOR CH 1/10W 100K	1	
R306		ERJ6GEYJ683	M.RESISTOR CH 1/10W 68K	1	
R307		ERJ6GEYG223	M.RESISTOR CH 1/10W 22K	1	
R308		ERJ6GEYJ103	M.RESISTOR CH 1/10W 10K	1	
R309		ERJ6GEYJ101	M.RESISTOR CH 1/10W 100	1	
R310		ERJ6GEYJ822	M.RESISTOR CH 1/10W 8.2K	1	
R311		ERJ6GEYJ392	M.RESISTOR CH 1/10W 3.9K	1	
R312		ERJ6GEYJ153	M.RESISTOR CH 1/10W 15K	1	
R313		ERJ6GEYJ332	M.RESISTOR CH 1/10W 3.3K	1	
R314		ERJ6GEYJ151	M.RESISTOR CH 1/10W 150	1	
R315,16		ERJ6GEYJ103	M.RESISTOR CH 1/10W 10K	2	
R317		ERJ6GEYJ683	M.RESISTOR CH 1/10W 68K	1	
R318		ERJ6GEYJ103	M.RESISTOR CH 1/10W 10K	1	
R319		ERJ6GEYJ273	M.RESISTOR CH 1/10W 27K	1	
R320		ERJ6GEYJ104	M.RESISTOR CH 1/10W 100K	1	
R321		ERJ6GEYG223	M.RESISTOR CH 1/10W 22K	1	
R322		ERJ6GEYG563	M.RESISTOR CH 1/10W 56K	1	
R325,26		VRE0034E332	M.RESISTOR CH 1/10W 3.3K	2	
R327		ERJ6GEYG223	M.RESISTOR CH 1/10W 22K	1	
R328		ERJ6GEYJ104	M.RESISTOR CH 1/10W 100K	1	
R329		ERJ6GEYJ393	M.RESISTOR CH 1/10W 39K	1	
R330		ERJ6GEYJ334	M.RESISTOR CH 1/10W 330K	1	
R331		ERJ6GEYJ474	M.RESISTOR CH 1/10W 470K	1	
R332,33		ERJ6GEYJ104	M.RESISTOR CH 1/10W 100K	2	
R334		ERJ6GEYJ105	M.RESISTOR CH 1/10W 1M	1	
R335		ERJ6GEYJ394	M.RESISTOR CH 1/10W 390K	1	
R336		ERJ6GEYJ472	M.RESISTOR CH 1/10W 4.7K	1	
R337,38		ERJ6GEYJ103	M.RESISTOR CH 1/10W 10K	2	
R339,40		VRE0034E332	M.RESISTOR CH 1/10W 3.3K	2	
R341		ERJ6GEYG223	M.RESISTOR CH 1/10W 22K	1	
R342		ERJ6GEYJ104	M.RESISTOR CH 1/10W 100K	1	
R343		ERJ6GEYJ473	M.RESISTOR CH 1/10W 47K	1	
R344		ERJ6GEYJ334	M.RESISTOR CH 1/10W 330K	1	
R345		ERJ6GEYJ474	M.RESISTOR CH 1/10W 470K	1	
R346		ERJ6GEYJ104	M.RESISTOR CH 1/10W 100K	1	
R347		ERJ6GEYJ105	M.RESISTOR CH 1/10W 1M	1	
R348		ERJ6GEYJ684	M.RESISTOR CH 1/10W 680K	1	
R349,50		ERJ6GEYJ103	M.RESISTOR CH 1/10W 10K	2	
R351		ERJ6GEYJ472	M.RESISTOR CH 1/10W 4.7K	1	
R352-55		ERJ6GEYJ103	M.RESISTOR CH 1/10W 10K	4	
R356		ERJ6GEYJ222	M.RESISTOR CH 1/10W 2.2K	1	
R357		ERJ6GEYG223	M.RESISTOR CH 1/10W 22K	1	
R358		ERJ6GEYJ104	M.RESISTOR CH 1/10W 100K	1	

Ref.No.		Part No.	Part Name & Description	Pcs	Remarks
R359,60		ERJ6GEYJ103	M.RESISTOR CH 1/10W 10K	2	
R362,63		ERJ6GEYJ103	M.RESISTOR CH 1/10W 10K	2	
R365		ERJ6GEYJ104	M.RESISTOR CH 1/10W 100K	1	
R366		ERJ6GEYJ103	M.RESISTOR CH 1/10W 10K	1	
R367,68		ERJ6GEYG563	M.RESISTOR CH 1/10W 56K	2	
R369		ERJ6GEYJ104	M.RESISTOR CH 1/10W 100K	1	
R370,71		ERJ6GEYJ103	M.RESISTOR CH 1/10W 10K	2	
R373,74		ERJ6GEYJ103	M.RESISTOR CH 1/10W 10K	2	
R376		ERJ6GEYJ104	M.RESISTOR CH 1/10W 100K	1	
R378,79		ERJ6GEYG563	M.RESISTOR CH 1/10W 56K	2	
R380		ERJ6GEYJ103	M.RESISTOR CH 1/10W 10K	1	
R381		ERJ6GEYJ473	M.RESISTOR CH 1/10W 47K	1	
R382		ERJ6GEYJ683	M.RESISTOR CH 1/10W 68K	1	
R383		ERJ6GEYJ152	M.RESISTOR CH 1/10W 1.5K	1	
R386		ERJ6GEYJ182	M.RESISTOR CH 1/10W 1.8K	1	
R388		ERJ6GEYJ273	M.RESISTOR CH 1/10W 27K	1	
R389		ERJ6GEYJ153	M.RESISTOR CH 1/10W 15K	1	
R390		ERJ6GEYJ273	M.RESISTOR CH 1/10W 27K	1	
R391		ERJ6GEYJ153	M.RESISTOR CH 1/10W 15K	1	
R392,93		ERJ6GEYJ103	M.RESISTOR CH 1/10W 10K	2	
R394,95		VREO034E102	M.RESISTOR CH 1/10W 1K	2	
R396,97		VREO034E472	M.RESISTOR CH 1/10W 4.7K	2	
R398		ERJ6GEYJ183	M.RESISTOR CH 1/10W 18K	1	
R424		ERJ6GEYJ222	M.RESISTOR CH 1/10W 2.2K	1	
R427		ERJ6GEYJ333	M.RESISTOR CH 1/10W 33K	1	
R428		ERJ6GEYG223	M.RESISTOR CH 1/10W 22K	1	
R432,33		ERJ6GEYJ393	M.RESISTOR CH 1/10W 39K	2	
R435		ERJ6GEYJ103	M.RESISTOR CH 1/10W 10K	1	
R437		ERJ6GEYJ684	M.RESISTOR CH 1/10W 680K	1	
R440		ERJ6GEYJ562	M.RESISTOR CH 1/10W 5.6K	1	
R442		ERJ6GEYJ105	M.RESISTOR CH 1/10W 1M	1	
R443		ERJ6GEYG223	M.RESISTOR CH 1/10W 22K	1	
R445		ERJ6GEY0R00	M.RESISTOR CH 1/10W 0	1	
R446,47		ERJ6GEYJ562	M.RESISTOR CH 1/10W 5.6K	2	
R448,49		ERJ6GEYJ105	M.RESISTOR CH 1/10W 1M	2	
R460		ERJ6GEYJ103	M.RESISTOR CH 1/10W 10K	1	
R461		ERJ6GEY0R00	M.RESISTOR CH 1/10W 0	1	
R462		ERJ6GEYG223	M.RESISTOR CH 1/10W 22K	1	
R463,64		ERJ6GEYJ331	M.RESISTOR CH 1/10W 330	2	
R465		ERJ6GEYG223	M.RESISTOR CH 1/10W 22K	1	
R466		ERJ6GEYJ103	M.RESISTOR CH 1/10W 10K	1	
R467		ERJ6GEYJ473	M.RESISTOR CH 1/10W 47K	1	
R470		ERJ6GEYJ394	M.RESISTOR CH 1/10W 390K	1	
R496		ERJ6GEYJ564	M.RESISTOR CH 1/10W 560K	1	
R501		ERJ6GEYJ102	M.RESISTOR CH 1/10W 1K	1	
R502		ERJ6GEYJ103	M.RESISTOR CH 1/10W 10K	1	
R503		ERJ6GEYJ102	M.RESISTOR CH 1/10W 1K	1	
R504-07		ERJ6GEYJ821	M.RESISTOR CH 1/10W 820	4	
R508		ERJ6GEYJ473	M.RESISTOR CH 1/10W 47K	1	
R509-12		ERJ6GEYJ391	M.RESISTOR CH 1/10W 390	4	
R513		ERJ6GEYJ103	M.RESISTOR CH 1/10W 10K	1	
R514		ERJ6GEYJ224	M.RESISTOR CH 1/10W 220K	1	
R515		ERJ6GEYJ273	M.RESISTOR CH 1/10W 27K	1	
R516		ERJ6GEYJ103	M.RESISTOR CH 1/10W 10K	1	
R517		ERJ6GEYJ272	M.RESISTOR CH 1/10W 2.7K	1	
R518		ERJ6GEYJ104	M.RESISTOR CH 1/10W 100K	1	
R519		ERJ6GEYJ392	M.RESISTOR CH 1/10W 3.9K	1	
R520		ERJ6GEYJ333	M.RESISTOR CH 1/10W 33K	1	
R521,22		ERJ6GEYJ224	M.RESISTOR CH 1/10W 220K	2	
R523		ERX12SJR47	M.RESISTOR 1/2W 0.47	1	
R524		ERJ6GEYJ273	M.RESISTOR CH 1/10W 27K	1	
R525		ERJ6GEYJ272	M.RESISTOR CH 1/10W 2.7K	1	
R526		ERJ6GEYJ103	M.RESISTOR CH 1/10W 10K	1	
R527		ERJ6GEYJ104	M.RESISTOR CH 1/10W 100K	1	
R528		ERJ6GEYJ224	M.RESISTOR CH 1/10W 220K	1	
R529		ERJ6GEYJ392	M.RESISTOR CH 1/10W 3.9K	1	
R530		ERJ6GEYG223	M.RESISTOR CH 1/10W 22K	1	
R531		ERJ6GEYJ224	M.RESISTOR CH 1/10W 220K	1	
R532		ERX12SJR68	M.RESISTOR 1/2W 0.68	1	
R533		ERJ6GEYJ224	M.RESISTOR CH 1/10W 220K	1	
R534		ERJ6GEYJ273	M.RESISTOR CH 1/10W 27K	1	
R535		ERJ6GEYJ103	M.RESISTOR CH 1/10W 10K	1	
R536		ERJ6GEYJ104	M.RESISTOR CH 1/10W 100K	1	
R537		ERX12SJR47	M.RESISTOR 1/2W 0.47	1	
R538-40		ERJ6GEYJ224	M.RESISTOR CH 1/10W 220K	3	

Ref.No.		Part No.	Part Name & Description	Pcs	Remarks
R541		ERJ6GEYJ272	M.RESISTOR CH 1/10W 2.7K	1	
R542		ERJ6GEYG223	M.RESISTOR CH 1/10W 22K	1	
R543		ERJ6GEYJ273	M.RESISTOR CH 1/10W 27K	1	
R544		ERJ6GEYJ104	M.RESISTOR CH 1/10W 100K	1	
R545		ERJ6GEYJ103	M.RESISTOR CH 1/10W 10K	1	
R546		ERX12SJR47	M.RESISTOR 1/2W 0.47	1	
R547-49		ERJ6GEYJ224	M.RESISTOR CH 1/10W 220K	3	
R550		ERJ6GEYJ272	M.RESISTOR CH 1/10W 2.7K	1	
R551		ERJ6GEYG223	M.RESISTOR CH 1/10W 22K	1	
R553		ERJ6GEY0R00	M.RESISTOR CH 1/10W 0	1	
R554		ERJ6GEYJ272	M.RESISTOR CH 1/10W 2.7K	1	
R555-57		ERJ6GEY0R00	M.RESISTOR CH 1/10W 0	3	
R600		ERJ6GEYJ271	M.RESISTOR CH 1/10W 270	1	
R601		ERJ6GEYJ105	M.RESISTOR CH 1/10W 1M	1	
R603		ERJ6GEYJ271	M.RESISTOR CH 1/10W 270	1	
R604		ERJ6GEYJ105	M.RESISTOR CH 1/10W 1M	1	
SW1,W2		VSR0032	VOLTAGE SELECT SWITCH	2	
SW3		VSS0126	SWITCH	1	
TP3-P7		VJR0646	TEST POINT	5	
TP13		VJR0646	TEST POINT	1	
TP15-17		VJR0646	TEST POINT	3	
TP19,20		VJR0646	TEST POINT	2	
TP102-05		VJR0646	TEST POINT	4	
TP108-18		VJR0646	TEST POINT	11	
TP201,02		VJR0646	TEST POINT	2	
TP302-04		VJR0646	TEST POINT	3	
TP306		VJR0646	TEST POINT	1	
TP309-12		VJR0646	TEST POINT	4	
TPG1-G3		VJR0646	TEST POINT	3	
VC101		ECV1ZW30X53	V.CAPACITOR 30P	1	
VR1		VRV0109B503	V.RESISTOR 50K	1	
VR3		VRV0109B203	V.RESISTOR 20K	1	
VR101		VRV0109B203	V.RESISTOR 20K	1	
VR102		VRV0109B103	V.RESISTOR 10K	1	
VR103		VRV0109B203	V.RESISTOR 20K	1	
VR104		VRV0109B502	V.RESISTOR 5K	1	
VR105		VRV0109B104	V.RESISTOR 100K	1	
VR301		VRV0109B502	V.RESISTOR 5K	1	
VR302,03		VRV0109B202	V.RESISTOR 2K	2	
VR304-07		VRV0109B503	V.RESISTOR 50K	4	
VR308		VRV0109B202	V.RESISTOR 2K	1	
VR309		VRV0109B503	V.RESISTOR 50K	1	
X101		VSX0217	CRYSTAL OSCILLATOR	1	
X501		VSX0136	CRYSTAL OSCILLATOR	1	
X600		VSX0126	CRYSTAL OSCILLATOR	1	
X601		VSX0086	CRYSTAL OSCILLATOR	1	
			MISCELLANEOUS		
		VML2143	CARD PULLER	1	
		VML2144	CARD PULLER	1	
		VMZ1547	BARRIER	1	
		VSC2286	SHIELD CASE	1	
		VXA3966	P.C.B. SHIELD PLATE	1	
		XYNV3+K6FR	SCREW	5	

Ref.No.		Part No.	Part Name & Description	Pcs	Remarks
	■	VEP82061F	P.C.BOARD W/COMPONENT		FOR AU-63H
			W5 SERVO		
			CAPACITORS		
C1		ECQM1H273JF	P.CAPACITOR 50V 0.027U	1	
C2		ECUM1H152JN	C.CAPACITOR CH 50V 1500P	1	
C3,C4		ECUM1H101JCN	C.CAPACITOR CH 50V 100P	2	
C5		ECEA1CU100	E.CAPACITOR 16V 10U	1	
C6		ECEA0JU101	E.CAPACITOR 6.3V 100U	1	
C7		ECEA1AU470	E.CAPACITOR 10V 47U	1	
C8		ECUM1H103ZFN	C.CAPACITOR CH 50V 0.01U	1	
C9		ECQM1H154JF	P.CAPACITOR 50V 0.15U	1	
C10		ECEA1HN2R2S	E.CAPACITOR 50V 2.2U	1	
C11		ECQM1H223JF	P.CAPACITOR 50V 0.022U	1	
C13		ECQP1H822JZ	P.CAPACITOR 50V 8200P	1	
C14		ECQM1H682JV	P.CAPACITOR 50V 6800P	1	
C15,16		ECUM1H103ZFN	C.CAPACITOR CH 50V 0.01U	2	
C17		ECQM1H394JV	P.CAPACITOR 50V 0.39U	1	
C18		ECEA1HU4R7	E.CAPACITOR 50V 4.7U	1	
C19		ECEA1AU470	E.CAPACITOR 10V 47U	1	
C20,21		ECUM1H103ZFN	C.CAPACITOR CH 50V 0.01U	2	
C22		ECEA1HU2R2	E.CAPACITOR 50V 2.2U	1	
C23,24		ECUM1E104ZFN	C.CAPACITOR CH 25V 0.1U	2	
C25		ECUM1H103ZFN	C.CAPACITOR CH 50V 0.01U	1	
C26		ECEA1AU470	E.CAPACITOR 10V 47U	1	
C27		ECUM1H103ZFN	C.CAPACITOR CH 50V 0.01U	1	
C28		ECEA1AU470	E.CAPACITOR 10V 47U	1	
C29		ECEA1AU330	E.CAPACITOR 10V 33U	1	
C30		ECUM1H103ZFN	C.CAPACITOR CH 50V 0.01U	1	
C31		ECEA1AU330	E.CAPACITOR 10V 33U	1	
C32		ECEA1AU470	E.CAPACITOR 10V 47U	1	
C33		ECUM1H103ZFN	C.CAPACITOR CH 50V 0.01U	1	
C34		ECEA1AU470	E.CAPACITOR 10V 47U	1	
C39		ECUM1H331JCN	C.CAPACITOR CH 50V 330P	1	
C40-42		ECUM1H103ZFN	C.CAPACITOR CH 50V 0.01U	3	
C43		ECUM1H101JCN	C.CAPACITOR CH 50V 100P	1	
C46		ECEA1CU470	E.CAPACITOR 16V 47U	1	
C47,48		ECUM1E104ZFN	C.CAPACITOR CH 25V 0.1U	2	
C101		ECQM1H104JF	P.CAPACITOR 50V 0.1U	1	
C102		ECUM1H151JCN	C.CAPACITOR CH 50V 150P	1	
C103		ECEA1CU470	E.CAPACITOR 16V 47U	1	
C104		ECEA1HU2R2	E.CAPACITOR 50V 2.2U	1	
C105		ECEA1CU101	E.CAPACITOR 16V 100U	1	
C106		ECQM1H104JF	P.CAPACITOR 50V 0.1U	1	
C107		ECUM1H151JCN	C.CAPACITOR CH 50V 150P	1	
C108		ECUM1H102JCN	C.CAPACITOR CH 50V 1000P	1	
C109		ECUM1H221JCN	C.CAPACITOR CH 50V 220P	1	
C110		ECQM1H103JF	P.CAPACITOR 50V 0.01U	1	
C111		ECEA1HU010	E.CAPACITOR 50V 1U	1	
C112		ECQM1H154JF	P.CAPACITOR 50V 0.15U	1	
C113		ECEA1HU010	E.CAPACITOR 50V 1U	1	
C114		ECEA1CU470	E.CAPACITOR 16V 47U	1	
C115		ECUM1H103ZFN	C.CAPACITOR CH 50V 0.01U	1	
C116		ECEA1CU470	E.CAPACITOR 16V 47U	1	
C117		ECUM1H103ZFN	C.CAPACITOR CH 50V 0.01U	1	
C118		ECEA1CU470	E.CAPACITOR 16V 47U	1	
C119		ECUM1H103ZFN	C.CAPACITOR CH 50V 0.01U	1	
C120		ECEA1CU470	E.CAPACITOR 16V 47U	1	
C121		ECUM1H103ZFN	C.CAPACITOR CH 50V 0.01U	1	
C122		ECEA1CU470	E.CAPACITOR 16V 47U	1	
C123		ECUM1H330JCN	C.CAPACITOR CH 50V 33P	1	
C124		ECUM1H103ZFN	C.CAPACITOR CH 50V 0.01U	1	
C125		ECEA1CU470	E.CAPACITOR 16V 47U	1	
C126		ECQM1H562JF	P.CAPACITOR 50V 5600P	1	
C127		ECQM1H393JF	P.CAPACITOR 50V 0.039U	1	
C128		ECQM1H104JF	P.CAPACITOR 50V 0.1U	1	
C129		ECEA1CM22	E.CAPACITOR 10V 22U	1	
C130		ECEA1HU010	E.CAPACITOR 50V 1U	1	
C131		ECEA1EN220S	E.CAPACITOR 25V 22U	1	
C132		ECQM1H103JF	P.CAPACITOR 50V 0.01U	1	
C133-36		ECUM1H103ZFN	C.CAPACITOR CH 50V 0.01U	4	
C137		ECEA1CU101	E.CAPACITOR 16V 100U	1	
C139		ECQM1H822JF	P.CAPACITOR 50V 8200P	1	
C140		ECUM1H102JCN	C.CAPACITOR CH 50V 1000P	1	
C141		ECEA1HN010S	E.CAPACITOR 50V 1U	1	
C143		ECEA1CU470	E.CAPACITOR 16V 47U	1	
C145		ECEA1AU470	E.CAPACITOR 10V 47U	1	
C146		ECUM1H103ZFN	C.CAPACITOR CH 50V 0.01U	1	
C147		ECEA1HUR47	E.CAPACITOR 50V 0.47U	1	
C148		ECEA1CU470	E.CAPACITOR 16V 47U	1	
C149,50		ECUM1H103ZFN	C.CAPACITOR CH 50V 0.01U	2	
C151		ECEA1HN010S	E.CAPACITOR 50V 1U	1	
C152,53		ECUM1H103ZFN	C.CAPACITOR CH 50V 0.01U	2	
C154		ECUM1H152KBN	C.CAPACITOR CH 50V 1500P	1	
C155		ECEA1HN100S	E.CAPACITOR 50V 10U	1	
C156		ECEA1HUR47	E.CAPACITOR 50V 0.47U	1	
C157,58		ECUM1H103ZFN	C.CAPACITOR CH 50V 0.01U	2	
C159		ECQM1H104JF	P.CAPACITOR 50V 0.1U	1	
C160		ECUM1H103ZFN	C.CAPACITOR CH 50V 0.01U	1	
C161		ECQM1H104JF	P.CAPACITOR 50V 0.1U	1	
C162,63		ECQM1H103JF	P.CAPACITOR 50V 0.01U	2	
C164		ECEA1HU4R7	E.CAPACITOR 50V 4.7U	1	
C165-67		ECUM1H103ZFN	C.CAPACITOR CH 50V 0.01U	3	
C168		ECEA1EU100	E.CAPACITOR 25V 10U	1	
C169		ECQM1H103JF	P.CAPACITOR 50V 0.01U	1	
C170		ECUM1H471JCN	C.CAPACITOR CH 50V 470P	1	
C171,72		ECUM1H103ZFN	C.CAPACITOR CH 50V 0.01U	2	
C173		ECUM1H101JCN	C.CAPACITOR CH 50V 100P	1	
C174		ECUM1H103ZFN	C.CAPACITOR CH 50V 0.01U	1	
C175		ECEA1HU2R2	E.CAPACITOR 50V 2.2U	1	
C176		ECEA1CU470	E.CAPACITOR 16V 47U	1	
C177		ECQM1H222JF	P.CAPACITOR 50V 2200P	1	
C179		ECUM1H221JCN	C.CAPACITOR CH 50V 220P	1	
C301		ECEA1AU330	E.CAPACITOR 10V 33U	1	
C302		ECUM1H103ZFN	C.CAPACITOR CH 50V 0.01U	1	
C303		ECQM1H562JF	P.CAPACITOR 50V 5600P	1	
C304		ECQM1H392JF	P.CAPACITOR 50V 3900P	1	
C305		ECUM1H103ZFN	C.CAPACITOR CH 50V 0.01U	1	
C306		ECQM1H123JF	P.CAPACITOR 50V 0.012U	1	
C307		ECEA1CN470S	E.CAPACITOR 16V 47U	1	
C308		ECEA0JU221	E.CAPACITOR 6.3V 220U	1	
C309		ECEA1HU2R2	E.CAPACITOR 50V 2.2U	1	
C310		ECQM1H104JF	P.CAPACITOR 50V 0.1U	1	
C311		ECUM1H153KBN	C.CAPACITOR CH 50V 0.015U	1	
C312		ECEA1HN010S	E.CAPACITOR 50V 1U	1	
C313,14		ECUM1H103ZFN	C.CAPACITOR CH 50V 0.01U	2	
C315		ECQM1H104JF	P.CAPACITOR 50V 0.1U	1	
C316		ECUM1E273KBN	C.CAPACITOR CH 25V 0.027U	1	
C317		ECEA1HN2R2S	E.CAPACITOR 50V 2.2U	1	
C318-20		ECUM1H103ZFN	C.CAPACITOR CH 50V 0.01U	3	
C321		ECEA1CU100	E.CAPACITOR 16V 10U	1	
C322		ECEA0JU470	E.CAPACITOR 6.3V 47U	1	
C323		ECUM1H103ZFN	C.CAPACITOR CH 50V 0.01U	1	
C324		ECEA0JU471	E.CAPACITOR 6.3V 470U	1	
C327		ECEA1HU2R2	E.CAPACITOR 50V 2.2U	1	
C330-36		ECUM1H103ZFN	C.CAPACITOR CH 50V 0.01U	7	
C338		ECEA1CU100	E.CAPACITOR 16V 10U	1	
C342		ECQM1H104JF	P.CAPACITOR 50V 0.1U	1	
C401-03		ECUM1H103ZFN	C.CAPACITOR CH 50V 0.01U	3	
C406-10		ECUM1H103ZFN	C.CAPACITOR CH 50V 0.01U	5	
C454		ECUM1H103ZFN	C.CAPACITOR CH 50V 0.01U	1	
C492		ECUM1H103ZFN	C.CAPACITOR CH 50V 0.01U	1	
C495,96		ECUM1H103ZFN	C.CAPACITOR CH 50V 0.01U	2	
C501		ECUM1H103ZFN	C.CAPACITOR CH 50V 0.01U	1	
C502		ECEA1CU470	E.CAPACITOR 16V 47U	1	
C503		ECEA1ESS471	E.CAPACITOR 25V 470U	1	
C504		ECUM1E473KBN	C.CAPACITOR CH 25V 0.047U	1	
C505		ECUM1H561JCN	C.CAPACITOR CH 50V 560P	1	
C506		ECUM1H820JCN	C.CAPACITOR CH 50V 82P	1	
C507		ECUM1H561JCN	C.CAPACITOR CH 50V 560P	1	
C508		ECEA1HU010	E.CAPACITOR 50V 1U	1	
C509-13		ECEA1ESS101	E.CAPACITOR 25V 100U	5	
C514		ECQM1H104JF	P.CAPACITOR 50V 0.1U	1	
C515		ECEA1EU4R7	E.CAPACITOR 25V 4.7U	1	

Ref.No.		Part No.	Part Name & Description	Pcs	Remarks
C516-18		ECEA1HN4R7S	E.CAPACITOR 50V 4.7U	3	
C519		ECEA1HU010	E.CAPACITOR 50V 1U	1	
C520-22		ECUM1H103KBN	C.CAPACITOR CH 50V 0.01U	3	
C523		ECQM1H104JF	P.CAPACITOR 50V 0.1U	1	
C524		ECEA1EU4R7	E.CAPACITOR 25V 4.7U	1	
C525,26		ECEA1HN4R7S	E.CAPACITOR 50V 4.7U	2	
C527		ECQM1H104JF	P.CAPACITOR 50V 0.1U	1	
C528		ECEA1HU010	E.CAPACITOR 50V 1U	1	
C529-31		ECUM1H103KBN	C.CAPACITOR CH 50V 0.01U	3	
C532		ECEA1EU4R7	E.CAPACITOR 25V 4.7U	1	
C533,34		ECEA1HN4R7S	E.CAPACITOR 50V 4.7U	2	
C535		ECQB1H224JF	P.CAPACITOR 50V 0.22U	1	
C536		ECEA1HU010	E.CAPACITOR 50V 1U	1	
C537-39		ECUM1H103KBN	C.CAPACITOR CH 50V 0.01U	3	
C540		ECEA1EU4R7	E.CAPACITOR 25V 4.7U	1	
C541-43		ECEA1HN4R7S	E.CAPACITOR 50V 4.7U	3	
C544		ECQB1H224JF	P.CAPACITOR 50V 0.22U	1	
C545		ECEA1HU010	E.CAPACITOR 50V 1U	1	
C546-48		ECUM1H103KBN	C.CAPACITOR CH 50V 0.01U	3	
C549		ECEA1AU470	E.CAPACITOR 10V 47U	1	
C550		ECUM1E473KBN	C.CAPACITOR CH 25V 0.047U	1	
C551		ECEA1HN4R7S	E.CAPACITOR 50V 4.7U	1	
C552		ECQM1H104JF	P.CAPACITOR 50V 0.1U	1	
C553		ECEA1HN4R7S	E.CAPACITOR 50V 4.7U	1	
C558-63		ECQM1H104JF	P.CAPACITOR 50V 0.1U	6	
C600		ECUM1H680JCN	C.CAPACITOR CH 50V 68P	1	
C601		ECUM1H050DCN	C.CAPACITOR CH 50V 50P	1	
C602		ECUM1H680JCN	C.CAPACITOR CH 50V 68P	1	
C603		ECUM1H050DCN	C.CAPACITOR CH 50V 50P	1	
C700		ECUM1H101JCN	C.CAPACITOR CH 50V 100P	1	
C701		ECQM1H104JF	P.CAPACITOR 50V 0.1U	1	
C702		ECUM1H103ZFN	C.CAPACITOR CH 50V 0.01U	1	
C703		ECEA1HN4R7S	E.CAPACITOR 50V 4.7U	1	
C704		ECUM1H103ZFN	C.CAPACITOR CH 50V 0.01U	1	
C705		ECQM1H682JF	P.CAPACITOR 50V 6800P	1	
C706-08		ECUM1H103ZFN	C.CAPACITOR CH 50V 0.01U	3	
C709		ECQP1H151JZ	P.CAPACITOR 50V 150P	1	
C710,11		ECUM1H103ZFN	C.CAPACITOR CH 50V 0.01U	2	
C712,13		ECQP1H151JZ	P.CAPACITOR 50V 150P	2	
C714-19		ECUM1H103ZFN	C.CAPACITOR CH 50V 0.01U	6	
C720		ECEA1CU220	E.CAPACITOR 16V 22U	1	
C721		ECQM1H122JF	P.CAPACITOR 50V 1200P	1	
C722		ECUM1H103ZFN	C.CAPACITOR CH 50V 0.01U	1	
C723		ECUM1H470JCN	C.CAPACITOR CH 50V 47P	1	
C724		ECUM1H180JCN	C.CAPACITOR CH 50V 18P	1	
C725		ECUM1H103ZFN	C.CAPACITOR CH 50V 0.01U	1	
C726		ECEA1CU330	E.CAPACITOR 16V 33U	1	
C727		ECQM1H124JF	P.CAPACITOR 50V 0.12U	1	
C728,29		ECUM1H103ZFN	C.CAPACITOR CH 50V 0.01U	2	
C730-32		ECUM1H472KBN	C.CAPACITOR CH 50V 4700P	3	
C733		ECQM1H124JF	P.CAPACITOR 50V 0.12U	1	
C734,35		ECUM1H103ZFN	C.CAPACITOR CH 50V 0.01U	2	
C736		ECQM1H182JF	P.CAPACITOR 50V 1800P	1	
C737		ECEA1HUR33	E.CAPACITOR 50V 0.33U	1	
C738		ECUM1H103ZFN	C.CAPACITOR CH 50V 0.01U	1	
C739		ECEA1CU100	E.CAPACITOR 16V 10U	1	
C740		ECEA1HUR33	E.CAPACITOR 50V 0.33U	1	
C741		ECUM1H103ZFN	C.CAPACITOR CH 50V 0.01U	1	
C742		ECEA1CU100	E.CAPACITOR 16V 10U	1	
C743		ECEA1HUR33	E.CAPACITOR 50V 0.33U	1	
C744		ECUM1H103ZFN	C.CAPACITOR CH 50V 0.01U	1	
C745		ECEA1CU100	E.CAPACITOR 16V 10U	1	
C746,47		ECEA1AU330	E.CAPACITOR 10V 33U	2	
C748		ECEA1HUR33	E.CAPACITOR 50V 0.33U	1	
C749		ECUM1H103ZFN	C.CAPACITOR CH 50V 0.01U	1	
C750		ECEA1CU100	E.CAPACITOR 16V 10U	1	
C751		ECUM1H103KBN	C.CAPACITOR CH 50V 0.01U	1	
C752		ECUM1H330JCN	C.CAPACITOR CH 50V 33P	1	
C753,54		ECEA1AU330	E.CAPACITOR 10V 33U	2	
C755		ECUM1H103KBN	C.CAPACITOR CH 50V 0.01U	1	
C756		ECUM1H103ZFN	C.CAPACITOR CH 50V 0.01U	1	
C757		ECUM1H271JCN	C.CAPACITOR CH 50V 270P	1	
C758		ECUM1H103ZFN	C.CAPACITOR CH 50V 0.01U	1	
C759		ECUM1H103KBN	C.CAPACITOR CH 50V 0.01U	1	
C760		ECUM1H103ZFN	C.CAPACITOR CH 50V 0.01U	1	

Ref.No.		Part No.	Part Name & Description	Pcs	Remarks
C761		ECUM1H330JCN	C.CAPACITOR CH 50V 33P	1	
C762		ECUM1H271JCN	C.CAPACITOR CH 50V 270P	1	
C763,64		ECEA1AU330	E.CAPACITOR 10V 33U	2	
C765		ECUM1H103KBN	C.CAPACITOR CH 50V 0.01U	1	
C900-11		ECUM1H103ZFN	C.CAPACITOR CH 50V 0.01U	12	
D1		MA151K	DIODE	1	
D302		MA151K	DIODE	1	
D303		MA151WK	DIODE	1	
D304		MA151WA	DIODE	1	
D305		MA151K	DIODE	1	
D307		MA151WA	DIODE	1	
D309		MA151WK	DIODE	1	
D310		MA151K	DIODE	1	
D313		MA151WA	DIODE	1	
D314-17		MA151WK	DIODE	4	
D318		MA151K	DIODE	1	
D319,20		MA151WK	DIODE	2	
D321,22		MA151K	DIODE	2	
D323,24		MA151WK	DIODE	2	
D325		MA151K	DIODE	1	
D330		MA151K	DIODE	1	
D333		MA151WK	DIODE	1	
D334,35		MA151K	DIODE	2	
D337,38		MA151K	DIODE	2	
D340		MA151WA	DIODE	1	
D341		MA151K	DIODE	1	
D345,46		MA151WA	DIODE	2	
D349		MA151WK	DIODE	1	
D351		MA151K	DIODE	1	
D501		MA151K	DIODE	1	
D502		MA151WK	DIODE	1	
D503		MA153	DIODE	1	
D504		MA151WK	DIODE	1	
D505,06		MA151K	DIODE	2	
D507		MA151WK	DIODE	1	
D508,09		MA151K	DIODE	2	
D510		MA151WK	DIODE	1	
D511		MA151K	DIODE	1	
D514-17		MA701A	DIODE	4	
D572		MA151K	DIODE	1	
D700		MA151WA	DIODE	1	
D701,02		1SS101	DIODE	2	
D703		MA151K	DIODE	1	
D704-06		MA153	DIODE	3	
D707-09		LN25RP	LED	3	
D710		MA153	DIODE	1	
D711,12		MA1039	DIODE	2	
D713		MA153	DIODE	1	
D714,15		MA1039	DIODE	2	
D716-21		MA153	DIODE	6	
IC1		LM2904M	IC	1	
IC2		LM2903M	IC	1	
IC3		LM2904M	IC	1	
IC4		NJM4558M	IC	1	
IC5		MC14538BF	IC	1	
IC6		UPD65031F405	IC	1	
IC7		MN53015VZW	IC	1	
IC8		MC14049UBF	IC	1	
IC9		MC14013BF	IC	1	
IC10		MM74HC221AM	IC	1	
IC11		AN78L05	IC	1	
IC12		MC14021BF	IC	1	
IC13		MC14094BF	IC	1	
IC14		MC14053BF	IC	1	(R)
IC15		MC14049UBF	IC	1	
IC16		MC14050BF	IC	1	
IC18		MN51020VZZ	IC	1	
IC101		LM2904M	IC	1	
IC102		LM2903M	IC	1	

Ref.No.		Part No.	Part Name & Description	Pcs	Remarks
IC103		LM2904M	IC	1	
IC104		MC14538BF	IC	1	
IC105		AN79L09	IC	1	
IC106		AN78N09	IC	1	
IC107		DN74LS293S	IC	1	
IC108		MC74HC00AF	IC	1	
IC109		MN6064R	IC	1	
IC110		MN6168VIA	IC	1	
IC111		MC74HCU04F	IC	1	
IC112		MC14049UBF	IC	1	
IC113,14		LM2904M	IC	2	
D505,06		MA151K	DIODE	2	
D507		MA151WK	DIODE	1	
D508,09		MA151K	DIODE	2	
D510		MA151WK	DIODE	1	
D511		MA151K	DIODE	1	
D514-17		MA701A	DIODE	4	
D572		MA151K	DIODE	1	
D700		MA151WA	DIODE	1	
D701,02		1SS101	DIODE	2	
D703		MA151K	DIODE	1	
D704-06		MA153	DIODE	3	
D707-09		LN25RP	LED	3	
D710		MA153	DIODE	1	
D711,12		MA1039	DIODE	2	
D713		MA153	DIODE	1	
D714,15		MA1039	DIODE	2	
D716-21		MA153	DIODE	6	
IC1		LM2904M	IC	1	
IC2		LM2903M	IC	1	
IC3		LM2904M	IC	1	
IC4		NJM4558M	IC	1	
IC5		MC14538BF	IC	1	
IC6		UPD65031F405	IC	1	
IC7		MN53015VZW	IC	1	
IC8		MC14049UBF	IC	1	
IC9		MC14013BF	IC	1	
IC10		MM74HC221AM	IC	1	
IC11		AN78L05	IC	1	
IC12		MC14021BF	IC	1	
IC13		MC14094BF	IC	1	
IC14		MC14053BF	IC	1	(R)
IC15		MC14049UBF	IC	1	
IC16		MC14050BF	IC	1	
IC18		MN51020VZZ	IC	1	
IC101		LM2904M	IC	1	
IC102		LM2903M	IC	1	
IC103		LM2904M	IC	1	
IC104		MC14538BF	IC	1	
IC105		AN79L09	IC	1	
IC106		AN78N09	IC	1	
IC107		DN74LS293S	IC	1	
IC108		MC74HC00AF	IC	1	
IC109		MN6064R	IC	1	
IC110		MN6168VIA	IC	1	
IC111		MC74HCU04F	IC	1	
IC112		MC14049UBF	IC	1	
IC113,14		LM2904M	IC	2	
IC115		LM2903M	IC	1	
IC116,17		LM2904M	IC	2	
IC118-20		MC14066BF	IC	3	
IC121		MC14052BF	IC	1	
IC123		MC14053BF	IC	1	(R)
IC124		MN53030VYA	IC	1	
IC125		MN53007VYC	IC	1	
IC126		UPC4558G2	IC	1	
IC128		NJM4558M	IC	1	
IC129		MC14538BF	IC	1	
IC130		MC14013BF	IC	1	
IC131		LM2904M	IC	1	
IC132		UPC4558G2	IC	1	
IC133		MN4030BS	IC	1	

Ref.No.		Part No.	Part Name & Description	Pcs	Remarks
IC134		MC14538BF	IC	1	
IC135		MC14053BF	IC	1	(R)
IC136		MC74HC02AF	IC	1	
IC137		MC14538BF	IC	1	
IC301		AN78L05	IC	1	
IC302		LM2904M	IC	1	
IC303		LM2902M	IC	1	
IC304		MC14053BF	IC	1	(R)
IC305		MC14066BF	IC	1	
IC306		LM2904M	IC	1	
IC307		LM2902M	IC	1	
IC308,09		LM2904M	IC	2	
IC310-13		MC14066BF	IC	4	
IC314		MC14028BF	IC	1	
IC315		MC14081BF	IC	1	
IC316		NJM2901M	IC	1	
IC318		MC14538BF	IC	1	
IC319		MC14049UBF	IC	1	
IC501		BA6149LS	IC	1	
IC502		PU4213	IC	1	
IC503-06		AN3821K	IC	4	
IC600,01		MC74HCU04F	IC	2	
IC700		AN608P	IC	1	
IC701		UPC4741G	IC	1	
IC702		TL431CLP	IC	1	
IC703		MC14053BF	IC	1	(R)
IC704		UPC4558G2	IC	1	
IC705		UPC4082G	IC	1	
IC706		MC74HC157AF	IC	1	
IC707		MN18882	IC	1	
IC708		VSI0623	IC	1	
IC709		51951BML600D	IC	1	
IC710		MC14538BF	IC	1	
IC711		MSM5210RS	IC	1	
IC712		UPD65024F137	IC	1	
IC713		UPC4082G	IC	1	
IC714		UPC4558G2	IC	1	
IC715		MC14051BF	IC	1	
IC716		UPC4082G	IC	1	
IC717		UPC4741G	IC	1	
IC718		UPC4558G2	IC	1	
IC719		MC14051BF	IC	1	
IC720		MC14053BF	IC	1	(R)
IC721		AN79L05	IC	1	
IC722		AN78L05	IC	1	
IC723		AN78L09	IC	1	
IC724		AN79L09	IC	1	
IC725,26		LM2902M	IC	2	
IC727		LM2903M	IC	1	
IC800		LM2904M	IC	1	
ICS708		VJS2336A028	CONNECTOR (FEMALE)	1	
L1		VLP0017	COIL	1	
L2-L4		VLQEL05S221J	COIL 220UH	3	
L101,02		VLQEL05S221J	COIL 220UH	2	
L501		VLQ0214	COIL 50UH	1	
L504-07		VLQ0129	COIL 300UH	4	
L701		VLQEL05S101J	COIL 100UH	1	
L702		VLQ0128	COIL 47UH	1	
Q1,Q2		UN2213	TRANSISTOR-RESISTOR	2	
Q8,Q9		UN2213	TRANSISTOR-RESISTOR	2	
Q10,11		UN2213	TRANSISTOR-RESISTOR	2	
Q17		UN2213	TRANSISTOR-RESISTOR	1	
Q101		2SD601-R	TRANSISTOR CHIP	1	(Q - R)
Q102		UN2213	TRANSISTOR-RESISTOR	1	
Q103		2SJ43	TRANSISTOR	1	
Q104		UN2213	TRANSISTOR-RESISTOR	1	
Q105		2SD601-R	TRANSISTOR CHIP	1	(Q - R)
Q106-08		UN2213	TRANSISTOR-RESISTOR	3	
Q109		2SD601-R	TRANSISTOR CHIP	1	(Q - R)

Ref.No.		Part No.	Part Name & Description	Pcs	Remarks
Q110-19		UN2213	TRANSISTOR-RESISTOR	10	
Q120		2SD601-R	TRANSISTOR CHIP	1	(Q,R)
Q123,24		UN2213	TRANSISTOR-RESISTOR	2	
Q128		UN2213	TRANSISTOR-RESISTOR	1	
Q129		UN2214	TRANSISTOR-RESISTOR	1	
Q130		2SK374	TRANSISTOR	1	
Q131-33		UN2213	TRANSISTOR-RESISTOR	3	
Q134,35		2SB709-R	TRANSISTOR CHIP	2	(Q,R)
Q137-39		UN2213	TRANSISTOR-RESISTOR	3	
Q140		MA151A	DIODE	1	
Q301,02		UN2213	TRANSISTOR-RESISTOR	2	
Q303		UN2113	TRANSISTOR-RESISTOR	1	
Q304		UN2213	TRANSISTOR-RESISTOR	1	
Q305		UN2113	TRANSISTOR-RESISTOR	1	
Q306-08		UN2213	TRANSISTOR-RESISTOR	3	
Q312-14		UN2213	TRANSISTOR-RESISTOR	3	
Q316		2SD601-R	TRANSISTOR CHIP	1	(Q,R)
Q317		UN2213	TRANSISTOR-RESISTOR	1	
Q319		2SD601-R	TRANSISTOR CHIP	1	(Q,R)
Q320		UN2213	TRANSISTOR-RESISTOR	1	
Q336,37		UN2213	TRANSISTOR-RESISTOR	2	
Q340		UN2213	TRANSISTOR-RESISTOR	1	
Q343		UN2213	TRANSISTOR-RESISTOR	1	
Q346,47		UN2213	TRANSISTOR-RESISTOR	2	
Q501-04		2SB709-R	TRANSISTOR CHIP	4	(Q,R)
Q505		UN2113	TRANSISTOR-RESISTOR	1	
Q506		UN2213	TRANSISTOR-RESISTOR	1	
Q507		UN2113	TRANSISTOR-RESISTOR	1	
Q508,09		UN2213	TRANSISTOR-RESISTOR	2	
Q700		UN2113	TRANSISTOR-RESISTOR	1	
Q701-11		UN2213	TRANSISTOR-RESISTOR	11	
			RESISTORS		
R1		ERJ6GEYJ103	M.RESISTOR CH 1/10W 10K	1	
R2		ERJ6GEYJ683	M.RESISTOR CH 1/10W 68K	1	
R3		ERJ6GEYJ103	M.RESISTOR CH 1/10W 10K	1	
R4		ERJ6GEYJ105	M.RESISTOR CH 1/10W 1M	1	
R5,R6		ERJ6GEYJ103	M.RESISTOR CH 1/10W 10K	2	
R7		ERJ6GEYJ155	M.RESISTOR CH 1/10W 1M	1	
R8		ERJ6GEYJ103	M.RESISTOR CH 1/10W 10K	1	
R9		ERJ6GEYJ125	M.RESISTOR CH 1/10W 1.2M	1	
R10		ERJ6GEYG563	M.RESISTOR CH 1/10W 56K	1	
R11,12		VRE0034E102	M.RESISTOR CH 1/10W 1K	2	
R13		ERJ6GEYJ123	M.RESISTOR CH 1/10W 12K	1	
R14		ERJ6GEYJ823	M.RESISTOR CH 1/10W 82K	1	
R15		ERJ6GEYJ393	M.RESISTOR CH 1/10W 39K	1	
R16		ERJ6GEYJ824	M.RESISTOR CH 1/10W 820K	1	
R17		ERJ6GEYJ822	M.RESISTOR CH 1/10W 8.2K	1	
R18		ERJ6GEYJ183	M.RESISTOR CH 1/10W 18K	1	
R19,20		ERJ6GEYJ822	M.RESISTOR CH 1/10W 8.2K	2	
R21		ERJ6GEYJ104	M.RESISTOR CH 1/10W 100K	1	
R22		ERJ6GEYJ472	M.RESISTOR CH 1/10W 4.7K	1	
R23		ERJ6GEYJ103	M.RESISTOR CH 1/10W 10K	1	
R24		ERJ6GEYG563	M.RESISTOR CH 1/10W 56K	1	
R25		ERJ6GEYJ102	M.RESISTOR CH 1/10W 1K	1	
R27		ERJ6GEYJ123	M.RESISTOR CH 1/10W 12K	1	
R28-31		ERJ6GEYG563	M.RESISTOR CH 1/10W 56K	4	
R34,35		ERJ6GEYJ103	M.RESISTOR CH 1/10W 10K	2	
R36		ERJ6GEYJ562	M.RESISTOR CH 1/10W 5.6K	1	
R37-44		ERJ6GEYG563	M.RESISTOR CH 1/10W 56K	8	
R45		ERJ6GEYJ104	M.RESISTOR CH 1/10W 100K	1	
R50		ERJ6GEYG563	M.RESISTOR CH 1/10W 56K	1	
R51		ERJ6GEYJ103	M.RESISTOR CH 1/10W 10K	1	
R52		ERJ6GEYJ474	M.RESISTOR CH 1/10W 470K	1	
R53		ERJ6GEYG563	M.RESISTOR CH 1/10W 56K	1	
R54		ERJ6GEYJ103	M.RESISTOR CH 1/10W 10K	1	
R55		ERJ6GEYJ474	M.RESISTOR CH 1/10W 470K	1	
R56		ERJ6GEYG563	M.RESISTOR CH 1/10W 56K	1	
R57		ERJ6GEYJ103	M.RESISTOR CH 1/10W 10K	1	
R58		ERJ6GEYJ474	M.RESISTOR CH 1/10W 470K	1	
R59		ERJ6GEYJ103	M.RESISTOR CH 1/10W 10K	1	
R60		ERJ6GEYJ102	M.RESISTOR CH 1/10W 1K	1	
R61		ERJ6GEYG223	M.RESISTOR CH 1/10W 22K	1	

Ref.No.		Part No.	Part Name & Description	Pcs	Remarks
R62		ERJ6GEYJ103	M.RESISTOR CH 1/10W 10K	1	
R64		ERJ6GEYJ153	M.RESISTOR CH 1/10W 15K	1	
R65		ERJ6GEYJ683	M.RESISTOR CH 1/10W 68K	1	
R69,70		ERJ6GEYJ102	M.RESISTOR CH 1/10W 1K	2	
R101		ERJ6GEYJ103	M.RESISTOR CH 1/10W 10K	1	
R102		ERJ6GEYJ184	M.RESISTOR CH 1/10W 180K	1	
R103		ERJ6GEYJ102	M.RESISTOR CH 1/10W 1K	1	
R104		ERJ6GEYJ474	M.RESISTOR CH 1/10W 470K	1	
R105-07		ERJ6GEYJ103	M.RESISTOR CH 1/10W 10K	3	
R108		ERJ6GEYJ184	M.RESISTOR CH 1/10W 180K	1	
R109		ERJ6GEYJ102	M.RESISTOR CH 1/10W 1K	1	
R110		ERJ6GEYJ474	M.RESISTOR CH 1/10W 470K	1	
R111		ERJ6GEYJ103	M.RESISTOR CH 1/10W 10K	1	
R112		ERJ6GEYJ153	M.RESISTOR CH 1/10W 15K	1	
R113		ERJ6GEYJ562	M.RESISTOR CH 1/10W 5.6K	1	
R114		ERJ6GEYJ224	M.RESISTOR CH 1/10W 220K	1	
R115		ERJ6GEYJ682	M.RESISTOR CH 1/10W 6.8K	1	
R116		ERJ6GEYJ153	M.RESISTOR CH 1/10W 15K	1	
R117		ERJ6GEYJ104	M.RESISTOR CH 1/10W 100K	1	
R118		ERJ6GEYJ103	M.RESISTOR CH 1/10W 10K	1	
R119		ERJ6GEYJ153	M.RESISTOR CH 1/10W 15K	1	
R120-22		ERJ6GEYJ103	M.RESISTOR CH 1/10W 10K	3	
R123		ERJ6GEYJ105	M.RESISTOR CH 1/10W 1M	1	
R124		ERJ6GEYJ272	M.RESISTOR CH 1/10W 2.7K	1	
R125		ERJ6GEYJ103	M.RESISTOR CH 1/10W 10K	1	
R126-32		ERJ6GEYG563	M.RESISTOR CH 1/10W 56K	7	
R133,34		ERJ6GEYJ103	M.RESISTOR CH 1/10W 10K	2	
R135,36		ERJ6GEYG563	M.RESISTOR CH 1/10W 56K	2	
R137		ERJ6GEYJ103	M.RESISTOR CH 1/10W 10K	1	
R138		ERJ6GEYG563	M.RESISTOR CH 1/10W 56K	1	
R139		ERJ6GEYJ224	M.RESISTOR CH 1/10W 220K	1	
R140		ERJ6GEYG563	M.RESISTOR CH 1/10W 56K	1	
R141		ERJ6GEYJ224	M.RESISTOR CH 1/10W 220K	1	
R142		ERJ6GEYG563	M.RESISTOR CH 1/10W 56K	1	
R143		ERJ6GEYG223	M.RESISTOR CH 1/10W 22K	1	
R144		ERJ6GEYJ103	M.RESISTOR CH 1/10W 10K	1	
R145		ERJ6GEYG563	M.RESISTOR CH 1/10W 56K	1	
R146		ERJ6GEYJ562	M.RESISTOR CH 1/10W 5.6K	1	
R147,48		ERJ6GEYJ273	M.RESISTOR CH 1/10W 27K	2	
R149		ERJ6GEYJ104	M.RESISTOR CH 1/10W 100K	1	
R150		ERJ6GEYJ183	M.RESISTOR CH 1/10W 18K	1	
R151		ERJ6GEYJ103	M.RESISTOR CH 1/10W 10K	1	
R152		ERJ6GEYJ824	M.RESISTOR CH 1/10W 820K	1	
R153		ERJ6GEYJ562	M.RESISTOR CH 1/10W 5.6K	1	
R154-56		ERJ6GEYJ393	M.RESISTOR CH 1/10W 39K	3	
R157,58		ERJ6GEYJ183	M.RESISTOR CH 1/10W 18K	2	
R159		ERJ6GEYJ682	M.RESISTOR CH 1/10W 6.8K	1	
R160		ERJ6GEYJ183	M.RESISTOR CH 1/10W 18K	1	
R161		ERJ6GEYJ103	M.RESISTOR CH 1/10W 10K	1	
R162		ERJ6GEYG563	M.RESISTOR CH 1/10W 56K	1	
R163		ERJ6GEYJ103	M.RESISTOR CH 1/10W 10K	1	
R164		ERJ6GEYJ562	M.RESISTOR CH 1/10W 5.6K	1	
R165		ERJ6GEYG563	M.RESISTOR CH 1/10W 56K	1	
R166		ERJ6GEYJ272	M.RESISTOR CH 1/10W 2.7K	1	
R167		ERJ6GEYJ333	M.RESISTOR CH 1/10W 33K	1	
R168		ERJ6GEYJ473	M.RESISTOR CH 1/10W 47K	1	
R169		ERJ6GEYJ183	M.RESISTOR CH 1/10W 18K	1	
R170,71		ERJ6GEYG563	M.RESISTOR CH 1/10W 56K	2	
R172		ERJ6GEYJ102	M.RESISTOR CH 1/10W 1K	1	
R181,82		ERJ6GEYG563	M.RESISTOR CH 1/10W 56K	2	
R183		ERJ6GEYJ102	M.RESISTOR CH 1/10W 1K	1	
R184		ERJ6GEYG563	M.RESISTOR CH 1/10W 56K	1	
R185		ERJ6GEYJ104	M.RESISTOR CH 1/10W 100K	1	
R186		ERJ6GEYJ102	M.RESISTOR CH 1/10W 1K	1	
R187,88		ERJ6GEYJ822	M.RESISTOR CH 1/10W 8.2K	2	
R189		ERJ6GEYJ561	M.RESISTOR CH 1/10W 560	1	
R190		ERJ6GEYJ472	M.RESISTOR CH 1/10W 4.7K	1	
R191,92		ERJ6GEYG563	M.RESISTOR CH 1/10W 56K	2	
R193,94		ERJ6GEYJ273	M.RESISTOR CH 1/10W 27K	2	
R195		ERJ6GEYJ562	M.RESISTOR CH 1/10W 5.6K	1	
R196		ERJ6GEYJ153	M.RESISTOR CH 1/10W 15K	1	
R197		ERJ6GEYJ332	M.RESISTOR CH 1/10W 3.3K	1	
R204		ERJ6GEYJ562	M.RESISTOR CH 1/10W 5.6K	1	
R205		ERJ6GEYJ101	M.RESISTOR CH 1/10W 100	1	
R206		ERJ6GEYJ104	M.RESISTOR CH 1/10W 100K	1	

Ref.No.		Part No.	Part Name & Description	Pcs	Remarks
R207-09		ERJ6GEYJ102	M.RESISTOR CH 1/10W 1K	3	
R210		ERJ6GEYJ153	M.RESISTOR CH 1/10W 15K	1	
R211		ERJ6GEYJ183	M.RESISTOR CH 1/10W 18K	1	
R212		ERJ6GEYJ683	M.RESISTOR CH 1/10W 68K	1	
R213-15		ERJ6GEYG563	M.RESISTOR CH 1/10W 56K	3	
R216		ERJ6GEYJ105	M.RESISTOR CH 1/10W 1M	1	
R222-27		ERJ6GEYG563	M.RESISTOR CH 1/10W 56K	6	
R228		ERJ6GEYJ104	M.RESISTOR CH 1/10W 100K	1	
R229		ERJ6GEYG223	M.RESISTOR CH 1/10W 22K	1	
R230		ERJ6GEYG563	M.RESISTOR CH 1/10W 56K	1	
R231		ERJ6GEYJ104	M.RESISTOR CH 1/10W 100K	1	
R232		VRE0034E272	M.RESISTOR CH 1/10W 2.7K	1	
R233		VRE0034E104	M.RESISTOR CH 1/10W 100K	1	
R234		VRE0034E272	M.RESISTOR CH 1/10W 2.7K	1	
R235		VRE0034E104	M.RESISTOR CH 1/10W 100K	1	
R236		ERJ6GEYG563	M.RESISTOR CH 1/10W 56K	1	
R237		ERJ6GEYJ824	M.RESISTOR CH 1/10W 820K	1	
R238		ERJ6GEYJ102	M.RESISTOR CH 1/10W 1K	1	
R239		ERJ6GEYJ103	M.RESISTOR CH 1/10W 10K	1	
R240		ERJ6GEYJ222	M.RESISTOR CH 1/10W 2.2K	1	
R241		ERJ6GEYJ104	M.RESISTOR CH 1/10W 100K	1	
R242		ERJ6GEYJ334	M.RESISTOR CH 1/10W 330K	1	
R243		ERJ6GEYJ101	M.RESISTOR CH 1/10W 100	1	
R244,45		ERJ6GEYJ103	M.RESISTOR CH 1/10W 10K	2	
R246		ERJ6GEYJ102	M.RESISTOR CH 1/10W 1K	1	
R247		ERJ6GEYJ103	M.RESISTOR CH 1/10W 10K	1	
R248		ERJ6GEYJ562	M.RESISTOR CH 1/10W 5.6K	1	
R249		ERJ6GEYJ392	M.RESISTOR CH 1/10W 3.9K	1	
R250		ERJ6GEYJ184	M.RESISTOR CH 1/10W 180K	1	
R251		ERJ6GEYJ224	M.RESISTOR CH 1/10W 220K	1	
R252		ERJ6GEYJ153	M.RESISTOR CH 1/10W 15K	1	
R253		ERJ6GEYJ564	M.RESISTOR CH 1/10W 560K	1	
R254-58		ERJ6GEYJ103	M.RESISTOR CH 1/10W 10K	5	
R259		ERJ6GEYG223	M.RESISTOR CH 1/10W 22K	1	
R260		ERJ6GEYJ393	M.RESISTOR CH 1/10W 39K	1	
R261		ERJ6GEYJ823	M.RESISTOR CH 1/10W 82K	1	
R262		ERJ6GEYJ123	M.RESISTOR CH 1/10W 12K	1	
R263		ERJ6GEYJ183	M.RESISTOR CH 1/10W 18K	1	
R264		ERJ6GEYJ333	M.RESISTOR CH 1/10W 33K	1	
R265		ERJ6GEYJ683	M.RESISTOR CH 1/10W 68K	1	
R266-69		ERJ6GEYG563	M.RESISTOR CH 1/10W 56K	4	
R270		ERJ6GEYJ562	M.RESISTOR CH 1/10W 5.6K	1	
R271		ERJ6GEYJ103	M.RESISTOR CH 1/10W 10K	1	
R273		ERJ6GEYJ393	M.RESISTOR CH 1/10W 39K	1	
R274		ERJ6GEYJ181	M.RESISTOR CH 1/10W 180	1	
R275		ERJ6GEYG563	M.RESISTOR CH 1/10W 56K	1	
R276,77		VRE0034E102	M.RESISTOR CH 1/10W 1K	2	
R278		ERJ6GEYJ472	M.RESISTOR CH 1/10W 4.7K	1	
R279-81		ERJ6GEYG563	M.RESISTOR CH 1/10W 56K	3	
R282		ERJ6GEYJ124	M.RESISTOR CH 1/10W 120K	1	
R283		ERJ6GEYJ103	M.RESISTOR CH 1/10W 10K	1	
R284		ERJ6GEYJ272	M.RESISTOR CH 1/10W 2.7K	1	
R285		ERJ6GEYJ122	M.RESISTOR CH 1/10W 1.2K	1	
R286,87		ERJ6GEYJ472	M.RESISTOR CH 1/10W 4.7K	2	
R288		ERJ6GEYJ473	M.RESISTOR CH 1/10W 47K	1	
R289		ERJ6GEYJ823	M.RESISTOR CH 1/10W 82K	1	
R301		ERJ6GEYG563	M.RESISTOR CH 1/10W 56K	1	
R302,03		ERJ6GEYJ103	M.RESISTOR CH 1/10W 10K	2	
R303		ERJ6GEY0R00	M.RESISTOR CH 1/10W 0	1	
R304		ERJ6GEYG563	M.RESISTOR CH 1/10W 56K	1	
R305		ERJ6GEYJ104	M.RESISTOR CH 1/10W 100K	1	
R306		ERJ6GEYJ683	M.RESISTOR CH 1/10W 68K	1	
R307		ERJ6GEYG223	M.RESISTOR CH 1/10W 22K	1	
R308		ERJ6GEYJ103	M.RESISTOR CH 1/10W 10K	1	
R309		ERJ6GEYJ101	M.RESISTOR CH 1/10W 100	1	
R310		ERJ6GEYJ822	M.RESISTOR CH 1/10W 8.2K	1	
R311		ERJ6GEYJ392	M.RESISTOR CH 1/10W 3.9K	1	
R312		ERJ6GEYJ153	M.RESISTOR CH 1/10W 15K	1	
R313		ERJ6GEYJ332	M.RESISTOR CH 1/10W 3.3K	1	
R314		ERJ6GEYJ151	M.RESISTOR CH 1/10W 150	1	
R315,16		ERJ6GEYJ103	M.RESISTOR CH 1/10W 10K	2	
R317		ERJ6GEYJ683	M.RESISTOR CH 1/10W 68K	1	
R318		ERJ6GEYJ103	M.RESISTOR CH 1/10W 10K	1	
R319		ERJ6GEYJ273	M.RESISTOR CH 1/10W 27K	1	
R320		ERJ6GEYJ104	M.RESISTOR CH 1/10W 100K	1	

Ref.No.		Part No.	Part Name & Description	Pcs	Remarks
R321		ERJ6GEYG223	M.RESISTOR CH 1/10W 22K	1	
R322		ERJ6GEYG563	M.RESISTOR CH 1/10W 56K	1	
R325,26		VRE0034E332	M.RESISTOR CH 1/10W 3.3K	2	
R327		ERJ6GEYG223	M.RESISTOR CH 1/10W 22K	1	
R328		ERJ6GEYJ104	M.RESISTOR CH 1/10W 100K	1	
R329		ERJ6GEYJ393	M.RESISTOR CH 1/10W 39K	1	
R330		ERJ6GEYJ334	M.RESISTOR CH 1/10W 330K	1	
R331		ERJ6GEYJ474	M.RESISTOR CH 1/10W 470K	1	
R332,33		ERJ6GEYJ104	M.RESISTOR CH 1/10W 100K	2	
R334		ERJ6GEYJ105	M.RESISTOR CH 1/10W 1M	1	
R335		ERJ6GEYJ394	M.RESISTOR CH 1/10W 390K	1	
R336		ERJ6GEYJ472	M.RESISTOR CH 1/10W 4.7K	1	
R337,38		ERJ6GEYJ103	M.RESISTOR CH 1/10W 10K	2	
R339,40		VRE0034E332	M.RESISTOR CH 1/10W 3.3K	2	
R341		ERJ6GEYG223	M.RESISTOR CH 1/10W 22K	1	
R342		ERJ6GEYJ104	M.RESISTOR CH 1/10W 100K	1	
R343		ERJ6GEYJ473	M.RESISTOR CH 1/10W 47K	1	
R344		ERJ6GEYJ334	M.RESISTOR CH 1/10W 330K	1	
R345		ERJ6GEYJ474	M.RESISTOR CH 1/10W 470K	1	
R346		ERJ6GEYJ104	M.RESISTOR CH 1/10W 100K	1	
R347		ERJ6GEYJ105	M.RESISTOR CH 1/10W 1M	1	
R348		ERJ6GEYJ684	M.RESISTOR CH 1/10W 680K	1	
R349,50		ERJ6GEYJ103	M.RESISTOR CH 1/10W 10K	2	
R351		ERJ6GEYJ472	M.RESISTOR CH 1/10W 4.7K	1	
R352-55		ERJ6GEYJ103	M.RESISTOR CH 1/10W 10K	4	
R356		ERJ6GEYJ222	M.RESISTOR CH 1/10W 2.2K	1	
R357		ERJ6GEYG223	M.RESISTOR CH 1/10W 22K	1	
R358		ERJ6GEYJ104	M.RESISTOR CH 1/10W 100K	1	
R359,60		ERJ6GEYJ103	M.RESISTOR CH 1/10W 10K	2	
R362,63		ERJ6GEYJ103	M.RESISTOR CH 1/10W 10K	2	
R365		ERJ6GEYJ104	M.RESISTOR CH 1/10W 100K	1	
R366		ERJ6GEYJ103	M.RESISTOR CH 1/10W 10K	1	
R366		ERJ6GEYJ473	M.RESISTOR CH 1/10W 47K	1	
R367,68		ERJ6GEYG563	M.RESISTOR CH 1/10W 56K	2	
R369		ERJ6GEYJ104	M.RESISTOR CH 1/10W 100K	1	
R370,71		ERJ6GEYJ103	M.RESISTOR CH 1/10W 10K	2	
R373,74		ERJ6GEYJ103	M.RESISTOR CH 1/10W 10K	2	
R376		ERJ6GEYJ104	M.RESISTOR CH 1/10W 100K	1	
R378,79		ERJ6GEYG563	M.RESISTOR CH 1/10W 56K	2	
R380		ERJ6GEYJ103	M.RESISTOR CH 1/10W 10K	1	
R381		ERJ6GEYJ473	M.RESISTOR CH 1/10W 47K	1	
R382		ERJ6GEYJ683	M.RESISTOR CH 1/10W 68K	1	
R383		ERJ6GEYJ152	M.RESISTOR CH 1/10W 1.5K	1	
R386		ERJ6GEYJ182	M.RESISTOR CH 1/10W 1.8K	1	
R388		ERJ6GEYJ273	M.RESISTOR CH 1/10W 27K	1	
R389		ERJ6GEYJ153	M.RESISTOR CH 1/10W 15K	1	
R390		ERJ6GEYJ273	M.RESISTOR CH 1/10W 27K	1	
R391		ERJ6GEYJ153	M.RESISTOR CH 1/10W 15K	1	
R392,93		ERJ6GEYJ103	M.RESISTOR CH 1/10W 10K	2	
R394,95		VRE0034E102	M.RESISTOR CH 1/10W 1K	2	
R396,97		VRE0034E472	M.RESISTOR CH 1/10W 4.7K	2	
R398		ERJ6GEYJ183	M.RESISTOR CH 1/10W 18K	1	
R424		ERJ6GEYJ222	M.RESISTOR CH 1/10W 2.2K	1	
R427		ERJ6GEYJ333	M.RESISTOR CH 1/10W 33K	1	
R428		ERJ6GEYG223	M.RESISTOR CH 1/10W 22K	1	
R432,33		ERJ6GEYJ393	M.RESISTOR CH 1/10W 39K	2	
R435		ERJ6GEYJ103	M.RESISTOR CH 1/10W 10K	1	
R437		ERJ6GEYJ684	M.RESISTOR CH 1/10W 680K	1	
R440		ERJ6GEYJ562	M.RESISTOR CH 1/10W 5.6K	1	
R442		ERJ6GEYJ105	M.RESISTOR CH 1/10W 1M	1	
R443		ERJ6GEYG223	M.RESISTOR CH 1/10W 22K	1	
R445		ERJ6GEY0R00	M.RESISTOR CH 1/10W 0	1	
R446,47		ERJ6GEYJ562	M.RESISTOR CH 1/10W 5.6K	2	
R448		ERJ6GEYG105	M.RESISTOR CH 1/10W 1M	1	
R449		ERJ6GEYJ105	M.RESISTOR CH 1/10W 1M	1	
R460		ERJ6GEYJ103	M.RESISTOR CH 1/10W 10K	1	
R461		ERJ6GEYG103	M.RESISTOR CH 1/10W 10K	1	
R462		ERJ6GEYG223	M.RESISTOR CH 1/10W 22K	1	
R463,64		ERJ6GEYJ331	M.RESISTOR CH 1/10W 330	2	
R465		ERJ6GEYG223	M.RESISTOR CH 1/10W 22K	1	
R466		ERJ6GEYG103	M.RESISTOR CH 1/10W 10K	1	
R467		ERJ6GEYJ473	M.RESISTOR CH 1/10W 47K	1	
R469		ERJ6GEYJ564	M.RESISTOR CH 1/10W 560K	1	
R470		ERJ6GEYJ394	M.RESISTOR CH 1/10W 390K	1	
R477		ERJ6GEYJ562	M.RESISTOR CH 1/10W 5.6K	1	

Ref.No.		Part No.	Part Name & Description	Pcs	Remarks
R501		ERJ6GEYJ102	M.RESISTOR CH 1/10W 1K	1	
R502		ERJ6GEYJ103	M.RESISTOR CH 1/10W 10K	1	
R503		ERJ6GEYJ102	M.RESISTOR CH 1/10W 1K	1	
R504-07		ERJ6GEYJ821	M.RESISTOR CH 1/10W 820	4	
R508		ERJ6GEYJ473	M.RESISTOR CH 1/10W 47K	1	
R509-12		ERJ6GEYJ391	M.RESISTOR CH 1/10W 390	4	
R513		ERJ6GEYJ103	M.RESISTOR CH 1/10W 10K	1	
R514		ERJ6GEYJ224	M.RESISTOR CH 1/10W 220K	1	
R515		ERJ6GEYJ273	M.RESISTOR CH 1/10W 27K	1	
R516		ERJ6GEYJ103	M.RESISTOR CH 1/10W 10K	1	
R517		ERJ6GEYJ272	M.RESISTOR CH 1/10W 2.7K	1	
R518		ERJ6GEYJ104	M.RESISTOR CH 1/10W 100K	1	
R519		ERJ6GEYJ392	M.RESISTOR CH 1/10W 3.9K	1	
R520		ERJ6GEYJ333	M.RESISTOR CH 1/10W 33K	1	
R521,22		ERJ6GEYJ224	M.RESISTOR CH 1/10W 220K	2	
R523		ERX12SJR47	M.RESISTOR 1/2W 0.47	1	
R524		ERJ6GEYJ273	M.RESISTOR CH 1/10W 27K	1	
R525		ERJ6GEYJ272	M.RESISTOR CH 1/10W 2.7K	1	
R526		ERJ6GEYJ103	M.RESISTOR CH 1/10W 10K	1	
R527		ERJ6GEYJ104	M.RESISTOR CH 1/10W 100K	1	
R528		ERJ6GEYJ224	M.RESISTOR CH 1/10W 220K	1	
R529		ERJ6GEYJ392	M.RESISTOR CH 1/10W 3.9K	1	
R530		ERJ6GEYG223	M.RESISTOR CH 1/10W 22K	1	
R531		ERJ6GEYJ224	M.RESISTOR CH 1/10W 220K	1	
R532		ERX12SJR68	M.RESISTOR 1/2W 0.68	1	
R533		ERJ6GEYJ224	M.RESISTOR CH 1/10W 220K	1	
R534		ERJ6GEYJ273	M.RESISTOR CH 1/10W 27K	1	
R535		ERJ6GEYJ103	M.RESISTOR CH 1/10W 10K	1	
R536		ERJ6GEYJ104	M.RESISTOR CH 1/10W 100K	1	
R537		ERX12SJR47	M.RESISTOR 1/2W 0.47	1	
R538-40		ERJ6GEYJ224	M.RESISTOR CH 1/10W 220K	3	
R541		ERJ6GEYJ272	M.RESISTOR CH 1/10W 2.7K	1	
R542		ERJ6GEYG223	M.RESISTOR CH 1/10W 22K	1	
R543		ERJ6GEYJ273	M.RESISTOR CH 1/10W 27K	1	
R544		ERJ6GEYJ104	M.RESISTOR CH 1/10W 100K	1	
R545		ERJ6GEYJ103	M.RESISTOR CH 1/10W 10K	1	
R546		ERX12SJR47	M.RESISTOR 1/2W 0.47	1	
R547-49		ERJ6GEYJ224	M.RESISTOR CH 1/10W 220K	3	
R550		ERJ6GEYJ272	M.RESISTOR CH 1/10W 2.7K	1	
R551		ERJ6GEYG223	M.RESISTOR CH 1/10W 22K	1	
R553		ERJ6GEY0R00	M.RESISTOR CH 1/10W 0	1	
R554		ERJ6GEYJ272	M.RESISTOR CH 1/10W 2.7K	1	
R555-57		ERJ6GEY0R00	M.RESISTOR CH 1/10W 0	3	
R600		ERJ6GEYJ271	M.RESISTOR CH 1/10W 270	1	
R601		ERJ6GEYJ105	M.RESISTOR CH 1/10W 1M	1	
R603		ERJ6GEYJ271	M.RESISTOR CH 1/10W 270	1	
R604		ERJ6GEYJ105	M.RESISTOR CH 1/10W 1M	1	
R700		ERJ6GEYJ103	M.RESISTOR CH 1/10W 10K	1	
R701		ERJ6GEYJ473	M.RESISTOR CH 1/10W 47K	1	
R702		ERJ6GEYJ103	M.RESISTOR CH 1/10W 10K	1	
R703		ERJ6GEYJ473	M.RESISTOR CH 1/10W 47K	1	
R704		ERJ6GEYJ103	M.RESISTOR CH 1/10W 10K	1	
R705		ERJ6GEYJ183	M.RESISTOR CH 1/10W 18K	1	
R706		ERJ6GEYJ473	M.RESISTOR CH 1/10W 47K	1	
R707		ERJ6GEYJ474	M.RESISTOR CH 1/10W 470K	1	
R708		ERJ6GEYJ331	M.RESISTOR CH 1/10W 330	1	
R709		ERJ6GEYJ102	M.RESISTOR CH 1/10W 1K	1	
R710		ERJ6GEYJ392	M.RESISTOR CH 1/10W 3.9K	1	
R711		ERJ6GEYJ393	M.RESISTOR CH 1/10W 39K	1	
R712		ERJ6GEYJ102	M.RESISTOR CH 1/10W 1K	1	
R713,14		ERJ6GEYG332	M.RESISTOR CH 1/10W 3.3K	2	
R715		ERJ6GEYG222	M.RESISTOR CH 1/10W 2.2K	1	
R716,17		ERJ6GEYJ332	M.RESISTOR CH 1/10W 3.3K	2	
R718		ERJ6GEYJ103	M.RESISTOR CH 1/10W 10K	1	
R719-26		ERJ6GEYG273	M.RESISTOR CH 1/10W 27K	8	
R727-40		ERJ6GEYJ473	M.RESISTOR CH 1/10W 47K	14	
R741		ERJ6GEYJ103	M.RESISTOR CH 1/10W 10K	1	
R742,43		ERJ6GEYJ473	M.RESISTOR CH 1/10W 47K	2	
R744		ERJ6GEYJ103	M.RESISTOR CH 1/10W 10K	1	
R746-50		ERJ6GEYJ103	M.RESISTOR CH 1/10W 10K	5	
R751		ERJ6GEYJ272	M.RESISTOR CH 1/10W 2.7K	1	
R752-54		ERJ6GEYJ561	M.RESISTOR CH 1/10W 560	3	
R755		ERJ6GEYG223	M.RESISTOR CH 1/10W 22K	1	
R756-58		ERJ6GEYG273	M.RESISTOR CH 1/10W 27K	3	
R759		ERJ6GEYG823	M.RESISTOR CH 1/10W 82K	1	

Ref.No.		Part No.	Part Name & Description	Pcs	Remarks
R760		ERJ6GEYG682	M.REISITOR CH 1/10W 6.8K	1	
R761		ERJ6GEYG153	M.RESISTOR CH 1/10W 15K	1	
R762		ERJ6GEYG124	M.RESISTOR CH 1/10W 120K	1	
R763		ERJ6GEYJ394	M.RESISTOR CH 1/10W 390K	1	
R764		ERJ6GEYJ124	M.RESISTOR CH 1/10W 120K	1	
R765		ERJ6GEYJ394	M.RESISTOR CH 1/10W 390K	1	
R766,67		ERJ6GEYJ273	M.RESISTOR CH 1/10W 27K	2	
R768		ERJ6GEYG182	M.RESISTOR CH 1/10W 1.8K	1	
R769		ERJ6GEYJ154	M.RESISTOR CH 1/10W 150K	1	
R770		ERJ6GEYJ393	M.RESISTOR CH 1/10W 39K	1	
R771		ERJ6GEYG682	M.REISITOR CH 1/10W 6.8K	1	
R772-74		ERJ6GEYG273	M.RESISTOR CH 1/10W 27K	3	
R775		ERJ6GEYG823	M.RESISTOR CH 1/10W 82K	1	
R776		ERJ6GEYG682	M.REISITOR CH 1/10W 6.8K	1	
R777,78		ERJ6GEYG564	M.RESISTOR CH 1/10W 560K	2	
R779		ERJ6GEYJ564	M.RESISTOR CH 1/10W 560K	1	
R780,81		ERJ6GEYG333	M.RESISTOR CH 1/10W 33K	2	
R782		ERJ6GEYJ564	M.RESISTOR CH 1/10W 560K	1	
R783		ERJ6GEYG153	M.RESISTOR CH 1/10W 15K	1	
R784		ERJ6GEYG124	M.RESISTOR CH 1/10W 120K	1	
R785		ERJ6GEYJ124	M.RESISTOR CH 1/10W 120K	1	
R786,87		ERJ6GEYJ394	M.RESISTOR CH 1/10W 390K	2	
R788,89		ERJ6GEYJ273	M.RESISTOR CH 1/10W 27K	2	
R790		ERJ6GEYG182	M.RESISTOR CH 1/10W 1.8K	1	
R791		ERJ6GEYJ154	M.RESISTOR CH 1/10W 150K	1	
R792		ERJ6GEYJ393	M.RESISTOR CH 1/10W 39K	1	
R793		ERJ6GEYG682	M.REISITOR CH 1/10W 6.8K	1	
R794,95		ERJ6GEYG273	M.RESISTOR CH 1/10W 27K	2	
R796		ERJ6GEYJ123	M.RESISTOR CH 1/10W 12K	1	
R797,98		ERJ6GEYJ104	M.RESISTOR CH 1/10W 100K	2	
R799		ERJ6GEYJ393	M.RESISTOR CH 1/10W 39K	1	
R800		ERJ6GEYJ103	M.RESISTOR CH 1/10W 10K	1	
R801,02		VRE0034E103	M.RESISTOR CH 1/10W 10K	2	
R803		ERJ6GEYJ474	M.RESISTOR CH 1/10W 470K	1	
R804,05		ERJ6GEYJ224	M.RESISTOR CH 1/10W 220K	2	
R806		ERJ6GEYJ272	M.RESISTOR CH 1/10W 2.7K	1	
R807		ERJ6GEYJ224	M.RESISTOR CH 1/10W 220K	1	
R808		ERJ6GEYJ272	M.RESISTOR CH 1/10W 2.7K	1	
R809		ERJ6GEYJ103	M.RESISTOR CH 1/10W 10K	1	
R810,11		VRE0034E103	M.RESISTOR CH 1/10W 10K	2	
R812		ERJ6GEYJ474	M.RESISTOR CH 1/10W 470K	1	
R813,14		ERJ6GEYJ224	M.RESISTOR CH 1/10W 220K	2	
R815		ERJ6GEYJ272	M.RESISTOR CH 1/10W 2.7K	1	
R816		ERJ6GEYJ224	M.RESISTOR CH 1/10W 220K	1	
R817		ERJ6GEYJ272	M.RESISTOR CH 1/10W 2.7K	1	
RA700,01		VCR0202	RESISTOR ARRAY	2	
RA702		EXBLD8103G	COMBI.R-R 10K	1	
SW1,W2		VSR0032	VOLTAGE SELECT SWITCH	2	
SW700		VSS0207	SWITCH	1	
TP3-P7		VJR0646	TEST POINT	5	
TP13		VJR0646	TEST POINT	1	
TP15-17		VJR0646	TEST POINT	3	
TP19,20		VJR0646	TEST POINT	2	
TP102-05		VJR0646	TEST POINT	4	
TP108-18		VJR0646	TEST POINT	11	
TP201,02		VJR0646	TEST POINT	2	
TP302-04		VJR0646	TEST POINT	3	
TP306		VJR0646	TEST POINT	1	
TP309-12		VJR0646	TEST POINT	4	
TP700-14		VJR0646	TEST POINT	15	
TPG1-G3		VJR0646	TEST POINT	3	
VC101		ECV1ZW30X53	V.CAPACITOR 30P	1	

Ref.No.		Part No.	Part Name & Description	Pcs	Remarks
VR1		VRV0109B503	V.RESISTOR 50K	1	
VR3		VRV0109B503	V.RESISTOR 50K	1	
VR101		VRV0109B203	V.RESISTOR 20K	1	
VR102		VRV0109B103	V.RESISTOR 10K	1	
VR103		VRV0109B203	V.RESISTOR 20K	1	
VR104		VRV0109B502	V.RESISTOR 5K	1	
VR105		VRV0109B104	V.RESISTOR 100K	1	
VR301		VRV0109B502	V.RESISTOR 5K	1	
VR302,03		VRV0109B202	V.RESISTOR 2K	2	
VR304-07		VRV0109B503	V.RESISTOR 50K	4	
VR308		VRV0109B202	V.RESISTOR 2K	1	
VR309		VRV0109B503	V.RESISTOR 50K	1	
VR700		VRV0109B202	V.RESISTOR 2K	1	
VR701		VRV0109B103	V.RESISTOR 10K	1	
VR702,03		VRV0064B503	V.RESISTOR 50K	2	
VR704-07		VRV0064B203	V.RESISTOR 20K	4	
VR708,09		VRV0109B102	V.RESISTOR 1K	2	
X101		VSX0217	CRYSTAL OSCILLATOR	1	
X501		VSX0136	CRYSTAL OSCILLATOR	1	
X600		VSX0126	CRYSTAL OSCILLATOR	1	
X601		VSX0086	CRYSTAL OSCILLATOR	1	
X700		VSX0257	CRYSTAL OSCILLATOR	1	
			MISCELLANEOUS		
		VML2143	CARD PULLER	1	
		VML2144	CARD PULLER	1	
		VMZ1547	BARRIER	1	
		VSC2286	SHIELD CASE	1	
		VXA3966	P.C.B. SHIELD PLATE	1	
		XYNV3+K6FR	SCREW	5	

Ref.No.		Part No.	Part Name & Description	Pcs	Remarks
	■	VEP84095K	P.C.BOARD W/COMPONENT		FOR AU-65H
			W6 AUDIO		
			CAPACITORS		
C1,C2		ECEA1CU470	E.CAPACITOR 16V 47U	2	
C3		ECEA0JU101	E.CAPACITOR 6.3V 100U	1	
C4		ECEA1CN100S	E.CAPACITOR 16V 10U	1	
C5		ECEA1HNR33S	E.CAPACITOR 50V 0.33U	1	
C6		ECUM1E473KBN	C.CAPACITOR CH 25V 0.047U	1	
C7		ECUM1H222KBN	C.CAPACITOR CH 50V 2200P	1	
C8		ECEA1CN100S	E.CAPACITOR 16V 10U	1	
C9		ECEA1CU100	E.CAPACITOR 16V 10U	1	
C10		ECEA1CN100S	E.CAPACITOR 16V 10U	1	
C11		ECUM1H272KBN	C.CAPACITOR CH 50V 2700P	1	
C12		ECEA1CU100	E.CAPACITOR 16V 10U	1	
C13,14		ECEA1CU470	E.CAPACITOR 16V 47U	2	
C17		ECUM1H822KBN	C.CAPACITOR CH 50V 8200P	1	
C18		ECUM1H681JCN	C.CAPACITOR CH 50V 680P	1	
C101		ECUM1H220JCN	C.CAPACITOR CH 50V 22P	1	
C102		ECEA1CN100S	E.CAPACITOR 16V 10U	1	
C103		ECUM1H470JCN	C.CAPACITOR CH 50V 47P	1	
C104		ECEA1CN100S	E.CAPACITOR 16V 10U	1	
C105		ECEA1CU470	E.CAPACITOR 16V 47U	1	
C106		ECUM1H470JCN	C.CAPACITOR CH 50V 47P	1	
C107		ECUM1E104ZFN	C.CAPACITOR CH 25V 0.1U	1	
C108		ECEA1CU101	E.CAPACITOR 16V 100U	1	
C109		ECEA1CN470S	E.CAPACITOR 16V 47U	1	
C110		ECEA1CU101	E.CAPACITOR 16V 100U	1	
C111		ECUM1E104ZFN	C.CAPACITOR CH 25V 0.1U	1	
C112,13		ECEA1CU101	E.CAPACITOR 16V 100U	2	
C114		ECEA1CN100S	E.CAPACITOR 16V 10U	1	
C115		ECUM1H220JCN	C.CAPACITOR CH 50V 22P	1	
C116,17		ECEA1CN100S	E.CAPACITOR 16V 10U	2	
C118		ECEA1CU470	E.CAPACITOR 16V 47U	1	
C120		ECUM1H470JCN	C.CAPACITOR CH 50V 47P	1	
C121		ECUM1H820JCN	C.CAPACITOR CH 50V 82P	1	
C122		ECUM1H151JCN	C.CAPACITOR CH 50V 150P	1	
C124		ECUM1H470JCN	C.CAPACITOR CH 50V 47P	1	
C125		ECEA0JU471	E.CAPACITOR 6.3V 470U	1	
C127,28		ECEA1CU470	E.CAPACITOR 16V 47U	2	
C129		ECQM1H473JF	P.CAPACITOR 50V 0.047U	1	
C130		ECUM1H331JCN	C.CAPACITOR CH 50V 330P	1	
C131,32		ECEA1CU470	E.CAPACITOR 16V 47U	2	
C133		ECUM1H562KBN	C.CAPACITOR CH 50V 5600P	1	
C134,35		ECEA1CN100S	E.CAPACITOR 16V 10U	2	
C136		ECQP1H472FZ	P.CAPACITOR 50V 4700P	1	
C137		ECEA1CU100	E.CAPACITOR 16V 10U	1	
C138		ECQM1H473JF	P.CAPACITOR 50V 0.047U	1	
C139		ECEA1HUR22	E.CAPACITOR 50V 0.22U	1	
C140,41		ECEA1HUR68	E.CAPACITOR 50V 0.68U	2	
C142		ECEA1HUR22	E.CAPACITOR 50V 0.22U	1	
C143		ECQM1H473JF	P.CAPACITOR 50V 0.047U	1	
C144		ECEA1CU100	E.CAPACITOR 16V 10U	1	
C145		ECQP1H472FZ	P.CAPACITOR 50V 4700P	1	
C146		ECEA1CN100S	E.CAPACITOR 16V 10U	1	
C147		ECQP1H103FZ	P.CAPACITOR 50V 0.01U	1	
C148,49		ECQM1H394JF	P.CAPACITOR 50V 0.39U	2	
C201		ECUM1H391JCN	C.CAPACITOR CH 50V 390P	1	
C202		ECEA1CN100S	E.CAPACITOR 16V 10U	1	
C203		ECUM1H272KBN	C.CAPACITOR CH 50V 2700P	1	
C204,05		ECEA1CN100S	E.CAPACITOR 16V 10U	2	
C206		ECEA1CN470S	E.CAPACITOR 16V 47U	1	
C207		ECUM1H682KBN	C.CAPACITOR CH 50V 6800P	1	
C208		ECQM1H473JF	P.CAPACITOR 50V 0.047U	1	
C209		ECEA1CN100S	E.CAPACITOR 16V 10U	1	
C210		ECQM1H394JF	P.CAPACITOR 50V 0.39U	1	
C211		ECUM1H222KBN	C.CAPACITOR CH 50V 2200P	1	
C212		ECUM1H472KBN	C.CAPACITOR CH 50V 4700P	1	

Ref.No.		Part No.	Part Name & Description	Pcs	Remarks
C213		ECUM1H682KBN	C.CAPACITOR CH 50V 6800P	1	
C214		ECUM1H103KBN	C.CAPACITOR CH 50V 0.01U	1	
C215		ECUM1E153KBN	C.CAPACITOR CH 25V 0.015U	1	
C216		ECEA1CN100S	E.CAPACITOR 16V 10U	1	
C217		ECUM1H152KBN	C.CAPACITOR CH 50V 1500P	1	
C218		ECUM1H122KBN	C.CAPACITOR CH 50V 1200P	1	
C219		ECUM1H152KBN	C.CAPACITOR CH 50V 1500P	1	
C220		ECUM1H102KBN	C.CAPACITOR CH 50V 1000P	1	
C301		ECUM1H220JCN	C.CAPACITOR CH 50V 22P	1	
C302		ECEA1CN100S	E.CAPACITOR 16V 10U	1	
C303		ECUM1H470JCN	C.CAPACITOR CH 50V 47P	1	
C304		ECEA1CN100S	E.CAPACITOR 16V 10U	1	
C305		ECEA1CU470	E.CAPACITOR 16V 47U	1	
C306		ECUM1H470JCN	C.CAPACITOR CH 50V 47P	1	
C307		ECUM1E104ZFN	C.CAPACITOR CH 25V 0.1U	1	
C308		ECEA1CU101	E.CAPACITOR 16V 100U	1	
C309		ECEA1CN470S	E.CAPACITOR 16V 47U	1	
C310		ECEA1CU101	E.CAPACITOR 16V 100U	1	
C311		ECUM1E104ZFN	C.CAPACITOR CH 25V 0.1U	1	
C312,13		ECEA1CU101	E.CAPACITOR 16V 100U	2	
C314		ECEA1CN100S	E.CAPACITOR 16V 10U	1	
C315		ECUM1H220JCN	C.CAPACITOR CH 50V 22P	1	
C316,17		ECEA1CN100S	E.CAPACITOR 16V 10U	2	
C318		ECEA1CU470	E.CAPACITOR 16V 47U	1	
C320		ECUM1H470JCN	C.CAPACITOR CH 50V 47P	1	
C321		ECUM1H820JCN	C.CAPACITOR CH 50V 82P	1	
C322		ECUM1H151JCN	C.CAPACITOR CH 50V 150P	1	
C324		ECUM1H470JCN	C.CAPACITOR CH 50V 47P	1	
C325		ECEA0JU471	E.CAPACITOR 6.3V 470U	1	
C327,28		ECEA1CU470	E.CAPACITOR 16V 47U	2	
C329		ECQM1H473JF	P.CAPACITOR 50V 0.047U	1	
C330		ECUM1H331JCN	C.CAPACITOR CH 50V 330P	1	
C331,32		ECEA1CU470	E.CAPACITOR 16V 47U	2	
C333		ECUM1H562KBN	C.CAPACITOR CH 50V 5600P	1	
C334,35		ECEA1CN100S	E.CAPACITOR 16V 10U	2	
C336		ECQP1H472FZ	P.CAPACITOR 50V 4700P	1	
C337		ECEA1CU100	E.CAPACITOR 16V 10U	1	
C338		ECQM1H473JF	P.CAPACITOR 50V 0.047U	1	
C339		ECEA1HUR22	E.CAPACITOR 50V 0.22U	1	
C340,41		ECEA1HUR68	E.CAPACITOR 50V 0.68U	2	
C342		ECEA1HUR22	E.CAPACITOR 50V 0.22U	1	
C343		ECQM1H473JF	P.CAPACITOR 50V 0.047U	1	
C344		ECEA1CU100	E.CAPACITOR 16V 10U	1	
C345		ECQP1H472FZ	P.CAPACITOR 50V 4700P	1	
C346		ECEA1CN100S	E.CAPACITOR 16V 10U	1	
C347		ECQP1H103FZ	P.CAPACITOR 50V 0.01U	1	
C348,49		ECQM1H394JF	P.CAPACITOR 50V 0.39U	2	
C401		ECUM1H391JCN	C.CAPACITOR CH 50V 390P	1	
C402		ECEA1CN100S	E.CAPACITOR 16V 10U	1	
C403		ECUM1H272KBN	C.CAPACITOR CH 50V 2700P	1	
C404,05		ECEA1CN100S	E.CAPACITOR 16V 10U	2	
C406		ECEA1CN470S	E.CAPACITOR 16V 47U	1	
C407		ECUM1H682KBN	C.CAPACITOR CH 50V 6800P	1	
C408		ECQM1H473JF	P.CAPACITOR 50V 0.047U	1	
C409		ECEA1CN100S	E.CAPACITOR 16V 10U	1	
C410		ECQM1H394JF	P.CAPACITOR 50V 0.39U	1	
C411		ECUM1H222KBN	C.CAPACITOR CH 50V 2200P	1	
C412		ECUM1H472KBN	C.CAPACITOR CH 50V 4700P	1	
C413		ECUM1H682KBN	C.CAPACITOR CH 50V 6800P	1	
C414		ECUM1H103KBN	C.CAPACITOR CH 50V 0.01U	1	
C415		ECUM1E153KBN	C.CAPACITOR CH 25V 0.015U	1	
C416		ECEA1CN100S	E.CAPACITOR 16V 10U	1	
C417		ECUM1H152KBN	C.CAPACITOR CH 50V 1500P	1	
C418		ECUM1H122KBN	C.CAPACITOR CH 50V 1200P	1	
C419		ECUM1H152KBN	C.CAPACITOR CH 50V 1500P	1	
C420		ECUM1H102KBN	C.CAPACITOR CH 50V 1000P	1	
C501		ECEA1CU101	E.CAPACITOR 16V 100U	1	
C503		ECEA1CU220	E.CAPACITOR 16V 22U	1	
C551		ECUM1E104ZFN	C.CAPACITOR CH 25V 0.1U	1	
C553		ECEA1AU101	E.CAPACITOR 10V 100U	1	
C554,55		ECUM1E104ZFN	C.CAPACITOR CH 25V 0.1U	2	
C556		ECEA1VU101	E.CAPACITOR 35V 100U	1	
C557		ECEA1EU101	E.CAPACITOR 25V 100U	1	
C558		ECQM1H104JF	P.CAPACITOR 50V 0.1U	1	
C559,60		ECUM1H103KBN	C.CAPACITOR CH 50V 0.01U	2	

Ref.No.		Part No.	Part Name & Description	Pcs	Remarks
C561		ECEA1EU100	E.CAPACITOR 25V 10U	1	
C562		ECCD2H181J	C.CAPACITOR 500V 180P	1	
C563		ECCD2H271J	C.CAPACITOR 500V 270P	1	
C564		ECQM1H104JF	P.CAPACITOR 50V 0.1U	1	
C565,66		ECUM1H103KBN	C.CAPACITOR CH 50V 0.01U	2	
C567		ECEA1EU100	E.CAPACITOR 25V 10U	1	
C568		ECCD2H181J	C.CAPACITOR 500V 180P	1	
C569		ECCD2H271J	C.CAPACITOR 500V 270P	1	
C570		ECQM1H104JF	P.CAPACITOR 50V 0.1U	1	
C571-73		ECUM1H103KBN	C.CAPACITOR CH 50V 0.01U	3	
C574		ECEA1EU100	E.CAPACITOR 25V 10U	1	
C575		ECQM1H104JF	P.CAPACITOR 50V 0.1U	1	
C576		VCF2JAB182JE	P.CAPACITOR V	1	
C577		ECQM1H104JF	P.CAPACITOR 50V 0.1U	1	
C578-80		ECUM1H103KBN	C.CAPACITOR CH 50V 0.01U	3	
C581		ECEA1EU100	E.CAPACITOR 25V 10U	1	
C582		ECQM1H104JF	P.CAPACITOR 50V 0.1U	1	
C583		VCF2JAB182JE	P.CAPACITOR V	1	
C584		ECQM1H104JF	P.CAPACITOR 50V 0.1U	1	
C585,86		ECUM1H103KBN	C.CAPACITOR CH 50V 0.01U	2	
C587		ECEA1EU100	E.CAPACITOR 25V 10U	1	
C588		VCF2JAB102JE	P.CAPACITOR V	1	
C589		ECCD2H680K	C.CAPACITOR 500V 68P	1	
C590		ECEA1AU470	E.CAPACITOR 10V 47U	1	
C591		ECQM1H104JF	P.CAPACITOR 50V 0.1U	1	
C592-94		ECUM1H103KBN	C.CAPACITOR CH 50V 0.01U	3	
C595		ECEA1EU100	E.CAPACITOR 25V 10U	1	
C596		VCF2JAB222JE	P.CAPACITOR V	1	
C597		ECUM1E104ZFN	C.CAPACITOR CH 25V 0.1U	1	
C598,99		ECUM1H103KBN	C.CAPACITOR CH 50V 0.01U	2	
C600		ECEA1EU100	E.CAPACITOR 25V 10U	1	
C601		VCF2JAB222JE	P.CAPACITOR V	1	
C602		ECUM1E104ZFN	C.CAPACITOR CH 25V 0.1U	1	
C603,04		ECUM1H103KBN	C.CAPACITOR CH 50V 0.01U	2	
C605		ECEA1EU100	E.CAPACITOR 25V 10U	1	
C606		VCF2JAB222JE	P.CAPACITOR V	1	
C607,08		ECUM1H330JCN	C.CAPACITOR CH 50V 33P	2	
C609		ECEA1HU3R3	E.CAPACITOR 50V 3.3U	1	
C610-12		ECUM1H331JCN	C.CAPACITOR CH 50V 330P	3	
C701		ECEA1CN470S	E.CAPACITOR 16V 47U	1	
C702		ECUM1H182KBN	C.CAPACITOR CH 50V 1800P	1	
C703		ECUM1H821JCN	C.CAPACITOR CH 50V 820P	1	
C712		ECEA1HU4R7	E.CAPACITOR 50V 4.7U	1	
C713		ECEA1HU3R3	E.CAPACITOR 50V 3.3U	1	
C714		ECQM1H682JF	P.CAPACITOR 50V 6800P	1	
C715		ECQM1H102JF	P.CAPACITOR 50V 1000P	1	
C716		ECQM1H223JF	P.CAPACITOR 50V 0.022U	1	
C717		ECEA1CU100	E.CAPACITOR 16V 10U	1	
C719		ECEA1HU4R7	E.CAPACITOR 50V 4.7U	1	
C720		ECEA1CU470	E.CAPACITOR 16V 47U	1	
C721		ECQM1H103JF	P.CAPACITOR 50V 0.01U	1	
C722		ECQB1H332JF	P.CAPACITOR 50V 3300P	1	
C723		ECUM1H272KBN	C.CAPACITOR CH 50V 2700P	1	
C724,25		ECUM1H102KBN	C.CAPACITOR CH 50V 1000P	2	
C726		ECEA1CN100S	E.CAPACITOR 16V 10U	1	
C727		ECEA1CU101	E.CAPACITOR 16V 100U	1	
C728		ECUM1E104ZFN	C.CAPACITOR CH 25V 0.1U	1	
C729,30		ECUM1H103KBN	C.CAPACITOR CH 50V 0.01U	2	
C731		ECEA1HU4R7	E.CAPACITOR 50V 4.7U	1	
C732		ECQM1H223JF	P.CAPACITOR 50V 0.022U	1	
C733		ECUM1H122KBN	C.CAPACITOR CH 50V 1200P	1	
C801		ECEA1CN470S	E.CAPACITOR 16V 47U	1	
C802		ECUM1H182KBN	C.CAPACITOR CH 50V 1800P	1	
C803		ECUM1H821JCN	C.CAPACITOR CH 50V 820P	1	
C804,05		ECUM1H222KBN	C.CAPACITOR CH 50V 2200P	2	
C812		ECEA1HU4R7	E.CAPACITOR 50V 4.7U	1	
C813		ECEA1HU3R3	E.CAPACITOR 50V 3.3U	1	
C814		ECQM1H682JF	P.CAPACITOR 50V 6800P	1	
C815		ECQM1H102JF	P.CAPACITOR 50V 1000P	1	
C816		ECQM1H223JF	P.CAPACITOR 50V 0.022U	1	
C817		ECEA1CU100	E.CAPACITOR 16V 10U	1	
C819		ECEA1HU4R7	E.CAPACITOR 50V 4.7U	1	
C820		ECEA1CU470	E.CAPACITOR 16V 47U	1	
C821		ECQM1H103JF	P.CAPACITOR 50V 0.01U	1	
C822		ECQB1H332JF	P.CAPACITOR 50V 3300P	1	

Ref.No.		Part No.	Part Name & Description	Pcs	Remarks
C823		ECUM1H272KBN	C.CAPACITOR CH 50V 2700P	1	
C824,25		ECUM1H102KBN	C.CAPACITOR CH 50V 1000P	2	
C826		ECEA1CN100S	E.CAPACITOR 16V 10U	1	
C827		ECEA1CU101	E.CAPACITOR 16V 100U	1	
C828		ECUM1E104ZFN	C.CAPACITOR CH 25V 0.1U	1	
C829,30		ECUM1H103KBN	C.CAPACITOR CH 50V 0.01U	2	
C831		ECEA1HU4R7	E.CAPACITOR 50V 4.7U	1	
C832		ECQM1H223JF	P.CAPACITOR 50V 0.022U	1	
C833		ECUM1H122KBN	C.CAPACITOR CH 50V 1200P	1	
C902		ECEA1AU470	E.CAPACITOR 10V 47U	1	
C903		ECUM1E104ZFN	C.CAPACITOR CH 25V 0.1U	1	
C904		ECEA1CU101	E.CAPACITOR 16V 100U	1	
C905		ECUM1E104ZFN	C.CAPACITOR CH 25V 0.1U	1	
C906,07		ECEA1CU101	E.CAPACITOR 16V 100U	2	
C908		ECUM1E104ZFN	C.CAPACITOR CH 25V 0.1U	1	
C909		ECEA1CU101	E.CAPACITOR 16V 100U	1	
C910-12		ECUM1H101JCN	C.CAPACITOR CH 50V 100P	3	
C913-15		ECUM1H151JCN	C.CAPACITOR CH 50V 150P	3	
C916		ECUM1H103KBN	C.CAPACITOR CH 50V 0.01U	1	
C917		ECEA1CU100	E.CAPACITOR 16V 10U	1	
C918		ECUM1E104ZFN	C.CAPACITOR CH 25V 0.1U	1	
C920		ECUM1H151JCN	C.CAPACITOR CH 50V 150P	1	
C921,22		ECUM1H103KBN	C.CAPACITOR CH 50V 0.01U	2	
C923		ECUM1H331JCN	C.CAPACITOR CH 50V 330P	1	
C924		ECEA1HU010	E.CAPACITOR 50V 1U	1	
C925		ECQM1H223JF	P.CAPACITOR 50V 0.022U	1	
C926		ECUM1H103KBN	C.CAPACITOR CH 50V 0.01U	1	
C929		ECUM1H151JCN	C.CAPACITOR CH 50V 150P	1	
C930,31		ECUM1H103KBN	C.CAPACITOR CH 50V 0.01U	2	
C932		ECUM1H271JCN	C.CAPACITOR CH 50V 270P	1	
C933		ECUM1H391JCN	C.CAPACITOR CH 50V 390P	1	
C934,35		ECUM1H103KBN	C.CAPACITOR CH 50V 0.01U	2	
C936		ECEA1CU100	E.CAPACITOR 16V 10U	1	
C937		ECUM1E104ZFN	C.CAPACITOR CH 25V 0.1U	1	
C938-40		ECEA1CU101	E.CAPACITOR 16V 100U	3	
C941		ECEA1HU3R3	E.CAPACITOR 50V 3.3U	1	
C942		ECEA1CU470	E.CAPACITOR 16V 47U	1	
C944		ECUM1H103KBN	C.CAPACITOR CH 50V 0.01U	1	
C945,46		ECEA1CU101	E.CAPACITOR 16V 100U	2	
C947,48		ECEA1HU010	E.CAPACITOR 50V 1U	2	
C949		ECUM1E104ZFN	C.CAPACITOR CH 25V 0.1U	1	
C950		ECEA1CU101	E.CAPACITOR 16V 100U	1	
D1		MA153	DIODE	1	
D2		MA151K	DIODE	1	
D3,D4		MA3024	DIODE	2	
D101		MA151K	DIODE	1	
D301		MA151K	DIODE	1	
D501		MA153	DIODE	1	
D502		MA151WA	DIODE	1	
D552-57		MA153	DIODE	6	
D558-60		MA3100	DIODE	3	
D561-64		MA153	DIODE	4	
D565,66		MA151K	DIODE	2	
D567,68		MA151WK	DIODE	2	
D569		MA151K	DIODE	1	
D570		MA151WK	DIODE	1	
D901		MA151WK	DIODE	1	
D902-04		MA151K	DIODE	3	
D905		MA153	DIODE	1	
FL1		VLQ0142	COIL	1	
FL101		EIR7QH007Q	FILTER	1	
FL102		VLF0829	FILTER	1	
FL103		ELM7Q306A	COIL	1	
FL201		VLQ0190	COIL 4.7MH	1	
FL202		VLQ0402	COIL	1	
FL301		EIR7QH007Q	FILTER	1	
FL302		VLF0829	FILTER	1	
FL303		ELM7Q306A	COIL	1	
FL401		VLQ0190	COIL 4.7MH	1	

Ref.No.		Part No.	Part Name & Description	Pcs	Remarks
FL402		VLQ0402	COIL	1	
FL701		VLF0427	FILTER	1	
FL801		VLF0427	FILTER	1	
FL901		ELB4L053	FILTER	1	
FL902		ELB4M043	FILTER	1	
IC1-C3		UPD4053BG	IC	3	
IC4		NJM4558M	IC	1	
IC5,C6		RC082BM	IC	2	
IC101		AN6558S	IC	1	
IC102		RC4556MB	IC	1	
IC103		UPD4053BG	IC	1	
IC104		NJM4558M	IC	1	
IC105		TEA0666T	IC	1	
IC106		AN78N09	IC	1	
IC107		AN79N09	IC	1	
IC108		NJM4558M	IC	1	
IC201-03		NJM4558M	IC	3	
IC301		AN6558S	IC	1	
IC302		RC4556MB	IC	1	
IC303		UPD4053BG	IC	1	
IC304		NJM4558M	IC	1	
IC305		TEA0666T	IC	1	
IC306		AN78N09	IC	1	
IC307		AN79N09	IC	1	
IC308		NJM4558M	IC	1	
IC401-03		NJM4558M	IC	3	
IC552		MB620412PF	IC	1	
IC553		AN78L20	IC	1	
IC554-56		LM2904M	IC	3	
IC701		NJM4558M	IC	1	
IC703		NJM4558M	IC	1	
IC801		NJM4558M	IC	1	
IC802		UPD4053BG	IC	1	
IC803,04		NJM4558M	IC	2	
IC805		BA7700K1	IC	1	
IC901		AN78L12	IC	1	
IC902		AN78L05	IC	1	
IC903		AN79L09	IC	1	
IC904		AN78L09	IC	1	
L1		EIR7QG010B	IF TRANSFORMER	1	
L101,02		VLQEL05S101K	COIL 100UH	2	
L301,02		VLQEL05S101K	COIL 100UH	2	
L551		VLQEL05S2R2K	COIL 2.2UH	1	
L552		VLQEL05S471K	COIL 470UH	1	
L553,54		VLQEL05S470J	COIL 47UH	2	
L901		VLQEL05S470J	COIL 47UH	1	
L902		VLQEL05S221J	COIL 220UH	1	
L903		VLQEL05S101K	COIL 100UH	1	
L904		VLQEL05S820J	COIL 82UH	1	
L905		VLQEL05S331J	COIL 330UH	1	
L906,07		VLQEL05S101K	COIL 100UH	2	
L909		VLQEL05S271J	COIL 270UH	1	
L910-13		VLQEL05S101K	COIL 100UH	4	
P101		VJP1232R	CONNECTOR(MALE) 5P	1	
P301		VJP1232G	CONNECTOR(MALE)	1	
P551		VJP3080	CONNECTOR (MALE)	1	
P553		VJP1230T	CONNECTOR(MALE) 3P	1	
Q1		2SD602	TRANSISTOR	1	(Q,R)
Q2		UN2113	TRANSISTOR-RESISTOR	1	
Q3		2SA1018-R	TRANSISTOR	1	(R)
Q4,Q5		2SC3478A-K	TRANSISTOR	2	
Q6		2SD602	TRANSISTOR	1	(Q,R)
Q7		2SD1328-R	TRANSISTOR CHIP	1	(Q,R)

Ref.No.		Part No.	Part Name & Description	Pcs	Remarks
Q11		UN2211	TRANSISTOR-RESISTOR	1	
Q12		2SB710	TRANSISTOR	1	
Q13		UN2113	TRANSISTOR-RESISTOR	1	
Q14		2SD1328-R	TRANSISTOR CHIP	1	(Q,R)
Q15		UN2213	TRANSISTOR-RESISTOR	1	
Q101		UN2113	TRANSISTOR-RESISTOR	1	
Q102		UN2213	TRANSISTOR-RESISTOR	1	
Q103-05		2SD601-R	TRANSISTOR CHIP	3	(Q,R)
Q106		UN2213	TRANSISTOR-RESISTOR	1	
Q107		2SD1328-R	TRANSISTOR CHIP	1	(Q,R)
Q108		UN2113	TRANSISTOR-RESISTOR	1	
Q109,10		2SD601-R	TRANSISTOR CHIP	2	(Q,R)
Q111,12		2SD1011	TRANSISTOR	2	
Q113		2SA1018-R	TRANSISTOR	1	(R)
Q114		2SK146	TRANSISTOR	1	(B,L)
Q115		2SD601-R	TRANSISTOR CHIP	1	(Q,R)
Q116		2SB709-R	TRANSISTOR CHIP	1	(Q,R)
Q117		2SD601-R	TRANSISTOR CHIP	1	(Q,R)
Q118-20		UN2213	TRANSISTOR-RESISTOR	3	
Q122		UN2213	TRANSISTOR-RESISTOR	1	
Q201		2SD601-R	TRANSISTOR CHIP	1	(Q,R)
Q202		2SB709-R	TRANSISTOR CHIP	1	(Q,R)
Q203		2SD601-R	TRANSISTOR CHIP	1	(Q,R)
Q204		2SB709-R	TRANSISTOR CHIP	1	(Q,R)
Q205		2SD1328-R	TRANSISTOR CHIP	1	(Q,R)
Q301		UN2113	TRANSISTOR-RESISTOR	1	
Q302		UN2213	TRANSISTOR-RESISTOR	1	
Q303-05		2SD601-R	TRANSISTOR CHIP	3	(Q,R)
Q306		UN2213	TRANSISTOR-RESISTOR	1	
Q307		2SD1328-R	TRANSISTOR CHIP	1	(Q,R)
Q308		UN2113	TRANSISTOR-RESISTOR	1	
Q309,10		2SD601-R	TRANSISTOR CHIP	2	(Q,R)
Q311,12		2SD1011	TRANSISTOR	2	
Q313		2SA1018-R	TRANSISTOR	1	(R)
Q314		2SK146	TRANSISTOR	1	(B,L)
Q315		2SD601-R	TRANSISTOR CHIP	1	(Q,R)
Q316		2SB709-R	TRANSISTOR CHIP	1	(Q,R)
Q317		2SD601-R	TRANSISTOR CHIP	1	(Q,R)
Q318-20		UN2213	TRANSISTOR-RESISTOR	3	
Q322		UN2213	TRANSISTOR-RESISTOR	1	
Q401		2SD601-R	TRANSISTOR CHIP	1	(Q,R)
Q402		2SB709-R	TRANSISTOR CHIP	1	(Q,R)
Q403		2SD601-R	TRANSISTOR CHIP	1	(Q,R)
Q404		2SB709-R	TRANSISTOR CHIP	1	(Q,R)
Q405		2SD1328-R	TRANSISTOR CHIP	1	(Q,R)
Q501		2SB709-R	TRANSISTOR CHIP	1	(Q,R)
Q502		UN2113	TRANSISTOR-RESISTOR	1	
Q551-62		UN2213	TRANSISTOR-RESISTOR	12	
Q563,64		UN2113	TRANSISTOR-RESISTOR	2	
Q565-68		2SC2295-B	TRANSISTOR CHIP	4	(B,C)
Q571		2SC2497	TRANSISTOR	1	
Q572		2SB710	TRANSISTOR	1	
Q573,74		2SD1994AQRTA	TRANSISTOR	2	
Q575		2SC2497	TRANSISTOR	1	
Q576		2SB710	TRANSISTOR	1	
Q577,78		2SD1994AQRTA	TRANSISTOR	2	
Q579		2SD1992A	TRANSISTOR	1	
Q580		2SB710	TRANSISTOR	1	
Q581,82		2SD1994AQRTA	TRANSISTOR	2	
Q583		2SB710	TRANSISTOR	1	
Q584,85		2SD1328-R	TRANSISTOR CHIP	2	(Q,R)
Q586		2SD1992A	TRANSISTOR	1	
Q587		2SB710	TRANSISTOR	1	
Q588,89		2SD1994AQRTA	TRANSISTOR	2	
Q590		2SB710	TRANSISTOR	1	
Q591,92		2SD1328-R	TRANSISTOR CHIP	2	(Q,R)
Q593		2SC2497	TRANSISTOR	1	
Q594		2SB710	TRANSISTOR	1	
Q595,96		2SD1994AQRTA	TRANSISTOR	2	
Q597		2SD1992A	TRANSISTOR	1	
Q598		2SB710	TRANSISTOR	1	
Q599,00		2SD1994AQRTA	TRANSISTOR	2	
Q601		2SB710	TRANSISTOR	1	
Q602,03		2SD1328-R	TRANSISTOR CHIP	2	(Q,R)
Q604		UN2213	TRANSISTOR-RESISTOR	1	

Ref.No.		Part No.	Part Name & Description	Pcs	Remarks
Q605		2SB710	TRANSISTOR	1	
Q606		2SD1992A	TRANSISTOR	1	
Q607		2SB710	TRANSISTOR	1	
Q608,09		2SD1994AQRTA	TRANSISTOR	2	
Q610		2SB710	TRANSISTOR	1	
Q611,12		2SD1328-R	TRANSISTOR CHIP	2	(Q,R)
Q613		UN2213	TRANSISTOR-RESISTOR	1	
Q614		2SB710	TRANSISTOR	1	
Q615		2SD1992A	TRANSISTOR	1	
Q616		2SB710	TRANSISTOR	1	
Q617,18		2SD1994AQRTA	TRANSISTOR	2	
Q619-27		UN2213	TRANSISTOR-RESISTOR	9	
Q701		2SD1328-R	TRANSISTOR CHIP	1	(Q,R)
Q702		2SD601-R	TRANSISTOR CHIP	1	(Q,R)
Q801		2SD1328-R	TRANSISTOR CHIP	1	(Q,R)
Q802		2SD601-R	TRANSISTOR CHIP	1	(Q,R)
Q901		UN2113	TRANSISTOR-RESISTOR	1	
Q902~04		UN2213	TRANSISTOR-RESISTOR	3	
Q909		2SC2404-B	TRANSISTOR CHIP	1	(B,C)
Q910,11		2SD601-R	TRANSISTOR CHIP	2	(Q,R)
Q912		2SC2404-B	TRANSISTOR CHIP	1	(B,C)
Q913,14		2SD601-R	TRANSISTOR CHIP	2	(Q,R)
Q915		2SC2404-B	TRANSISTOR CHIP	1	(B,C)
Q916,17		2SD601-R	TRANSISTOR CHIP	2	(Q,R)
Q920		UN2113	TRANSISTOR-RESISTOR	1	
			RESISTORS		
R1		ERJ6GEYJ102	M.RESISTOR CH 1/10W 1K	1	
R2		ERJ6GEYG223	M.RESISTOR CH 1/10W 22K	1	
R3,R4		ERJ6GEYJ473	M.RESISTOR CH 1/10W 47K	2	
R5		ERJ6GEYJ472	M.RESISTOR CH 1/10W 4.7K	1	
R6,R7		ERJ6GEYJ103	M.RESISTOR CH 1/10W 10K	2	
R8		ERJ6GEYJ104	M.RESISTOR CH 1/10W 100K	1	
R9		ERJ6GEYJ472	M.RESISTOR CH 1/10W 4.7K	1	
R10		ERJ6GEYJ471	M.RESISTOR CH 1/10W 470	1	
R11		ERJ6GEYJ222	M.RESISTOR CH 1/10W 2.2K	1	
R12		ERJ6GEYJ100	M.RESISTOR CH 1/10W 10	1	
R13		ERJ6GEYJ473	M.RESISTOR CH 1/10W 47K	1	
R14		ERJ6GEYJ102	M.RESISTOR CH 1/10W 1K	1	
R15		ERJ6GEY0R00	M.RESISTOR CH 1/10W 0	1	
R16		ERJ6GEYJ224	M.RESISTOR CH 1/10W 220K	1	
R17		ERJ6GEYJ562	M.RESISTOR CH 1/10W 5.6K	1	
R18		ERJ6GEYJ473	M.RESISTOR CH 1/10W 47K	1	
R19		ERJ6GEYJ331	M.RESISTOR CH 1/10W 330	1	
R20		ERJ6GEYJ473	M.RESISTOR CH 1/10W 47K	1	
R21		ERJ6GEYJ123	M.RESISTOR CH 1/10W 12K	1	
R22		ERJ6GEYJ104	M.RESISTOR CH 1/10W 100K	1	
R23		ERJ6GEYJ102	M.RESISTOR CH 1/10W 1K	1	
R24		ERJ6GEYJ470	M.RESISTOR CH 1/10W 47	1	
R25		ERJ6GEYJ332	M.RESISTOR CH 1/10W 3.3K	1	
R26		ERJ6GEYJ473	M.RESISTOR CH 1/10W 47K	1	
R27		ERJ6GEYJ472	M.RESISTOR CH 1/10W 4.7K	1	
R29		ERJ6GEYJ470	M.RESISTOR CH 1/10W 47	1	
R30		ERJ6GEYJ102	M.RESISTOR CH 1/10W 1K	1	
R39		ERJ6GEYJ104	M.RESISTOR CH 1/10W 100K	1	
R42,43		ERJ6GEYG223	M.RESISTOR CH 1/10W 22K	2	
R44		ERJ6GEYJ104	M.RESISTOR CH 1/10W 100K	1	
R49		ERJ6GEYJ103	M.RESISTOR CH 1/10W 10K	1	
R50		ERJ6GEYG223	M.RESISTOR CH 1/10W 22K	1	
R51		ERJ6GEYJ103	M.RESISTOR CH 1/10W 10K	1	
R53		ERJ6GEY0R00	M.RESISTOR CH 1/10W 0	1	
R55		ERJ6GEYJ682	M.RESISTOR CH 1/10W 6.8K	1	
R101,02		ERJ6GEYJ103	M.RESISTOR CH 1/10W 10K	2	
R104,05		ERJ6GEYG223	M.RESISTOR CH 1/10W 22K	2	
R106		ERJ6GEYJ103	M.RESISTOR CH 1/10W 10K	1	
R107		ERJ6GEYJ153	M.RESISTOR CH 1/10W 15K	1	
R108		ERJ6GEYJ681	M.RESISTOR CH 1/10W 680	1	
R109		ERJ6GEYJ470	M.RESISTOR CH 1/10W 47	1	
R110		ERJ6GEYJ102	M.RESISTOR CH 1/10W 1K	1	
R111		ERJ6GEYJ393	M.RESISTOR CH 1/10W 39K	1	
R112		ERJ6GEYJ104	M.RESISTOR CH 1/10W 100K	1	
R113		ERJ6GEYJ102	M.RESISTOR CH 1/10W 1K	1	
R114		ERJ6GEYJ332	M.RESISTOR CH 1/10W 3.3K	1	

Ref.No.		Part No.	Part Name & Description	Pcs	Remarks
R115		ERJ6GEYJ103	M.RESISTOR CH 1/10W 10K	1	
R116		ERJ6GEYJ332	M.RESISTOR CH 1/10W 3.3K	1	
R117		ERJ6GEYJ102	M.RESISTOR CH 1/10W 1K	1	
R118-20		ERJ6GEYJ104	M.RESISTOR CH 1/10W 100K	3	
R121		ERJ6GEYJ102	M.RESISTOR CH 1/10W 1K	1	
R122		ERJ6GEYJ103	M.RESISTOR CH 1/10W 10K	1	
R123		ERJ6GEYJ102	M.RESISTOR CH 1/10W 1K	1	
R124		ERJ6GEYG112	M.RESISTOR CH 1/10W 1.1K	1	
R125		ERJ6GEY0R00	M.RESISTOR CH 1/10W 0	1	
R126		ERJ6GEYJ104	M.RESISTOR CH 1/10W 100K	1	
R127		ERJ6GEYJ102	M.RESISTOR CH 1/10W 1K	1	
R128		ERJ6GEYJ123	M.RESISTOR CH 1/10W 12K	1	
R129		ERJ6GEYJ104	M.RESISTOR CH 1/10W 100K	1	
R130		ERJ6GEYJ103	M.RESISTOR CH 1/10W 10K	1	
R131		ERJ6GEYJ100	M.RESISTOR CH 1/10W 10	1	
R133,34		ERJ6GEYG223	M.RESISTOR CH 1/10W 22K	2	
R135		ERJ6GEYJ472	M.RESISTOR CH 1/10W 4.7K	1	
R136		ERJ6GEYJ561	M.RESISTOR CH 1/10W 560	1	
R137		ERJ6GEYJ332	M.RESISTOR CH 1/10W 3.3K	1	
R138,39		VRE0034E272	M.RESISTOR CH 1/10W 2.7K	2	
R140		ERJ6GEYJ103	M.RESISTOR CH 1/10W 10K	1	
R141		VRE0034E473	M.RESISTOR CH 1/10W 47K	1	
R142		VRE0034E272	M.RESISTOR CH 1/10W 2.7K	1	
R143		VRE0034E470	M.RESISTOR CH 1/10W 47	1	
R144		VRE0034E104	M.RESISTOR CH 1/10W 100K	1	
R145		ERJ6GEYJ102	M.RESISTOR CH 1/10W 1K	1	
R146		ERJ6GEYJ333	M.RESISTOR CH 1/10W 33K	1	
R147		ERJ6GEYJ103	M.RESISTOR CH 1/10W 10K	1	
R148,49		ERJ6GEYJ102	M.RESISTOR CH 1/10W 1K	2	
R150		ERJ6GEYG223	M.RESISTOR CH 1/10W 22K	1	
R151		ERJ6GEYJ102	M.RESISTOR CH 1/10W 1K	1	
R152		ERJ6GEYJ103	M.RESISTOR CH 1/10W 10K	1	
R153		ERJ6GEYJ221	M.RESISTOR CH 1/10W 220	1	
R154		ERJ6GEYJ101	M.RESISTOR CH 1/10W 100	1	
R155		ERJ6GEYJ272	M.RESISTOR CH 1/10W 2.7K	1	
R156		ERJ6GEYJ332	M.RESISTOR CH 1/10W 3.3K	1	
R157		VRE0034E102	M.RESISTOR CH 1/10W 1K	1	
R158		VRE0034E332	M.RESISTOR CH 1/10W 3.3K	1	
R159		ERJ6GEYJ221	M.RESISTOR CH 1/10W 220	1	
R160		VRE0034E823	M.RESISTOR CH 1/10W 82K	1	
R161		VRE0034E333	M.RESISTOR CH 1/10W 33K	1	
R162		VRE0034E823	M.RESISTOR CH 1/10W 82K	1	
R163		ERJ6GEYJ104	M.RESISTOR CH 1/10W 100K	1	
R164		VRE0034E683	M.RESISTOR CH 1/10W 68K	1	
R165		VRE0034E222	M.RESISTOR CH 1/10W 2.2K	1	
R166		VRE0034E512	M.RESISTOR CH 1/10W 5.1K	1	
R167		VRE0034E822	M.RESISTOR CH 1/10W 8.2K	1	
R168		VRE0034E203	M.RESISTOR CH 1/10W 20K	1	
R169		VRE0034E911	M.RESISTOR CH 1/10W 910	1	
R201		ERJ6GEYJ104	M.RESISTOR CH 1/10W 100K	1	
R202		ERJ6GEYJ103	M.RESISTOR CH 1/10W 10K	1	
R204		ERJ6GEYJ103	M.RESISTOR CH 1/10W 10K	1	
R205		ERJ6GEYJ332	M.RESISTOR CH 1/10W 3.3K	1	
R206		ERJ6GEYJ183	M.RESISTOR CH 1/10W 18K	1	
R207		ERJ6GEYJ132	M.RESISTOR CH 1/10W 1.3K	1	
R208		ERJ6GEYJ183	M.RESISTOR CH 1/10W 18K	1	
R209		ERJ6GEYG223	M.RESISTOR CH 1/10W 22K	1	
R210-12		ERJ6GEYJ104	M.RESISTOR CH 1/10W 100K	3	
R213		ERJ6GEYG223	M.RESISTOR CH 1/10W 22K	1	
R214		ERJ6GEYJ152	M.RESISTOR CH 1/10W 1.5K	1	
R215		ERJ6GEYJ332	M.RESISTOR CH 1/10W 3.3K	1	
R216		ERJ6GEYJ102	M.RESISTOR CH 1/10W 1K	1	
R217		ERJ6GEYJ104	M.RESISTOR CH 1/10W 100K	1	
R218		ERJ6GEYJ103	M.RESISTOR CH 1/10W 10K	1	
R219		ERJ6GEYJ472	M.RESISTOR CH 1/10W 4.7K	1	
R220		ERJ6GEYJ682	M.RESISTOR CH 1/10W 6.8K	1	
R221		ERJ6GEYJ471	M.RESISTOR CH 1/10W 470	1	
R222		ERJ6GEYJ102	M.RESISTOR CH 1/10W 1K	1	
R223		ERJ6GEYJ392	M.RESISTOR CH 1/10W 3.9K	1	
R224,25		ERJ6GEYJ103	M.RESISTOR CH 1/10W 10K	2	
R226		ERJ6GEYJ102	M.RESISTOR CH 1/10W 1K	1	
R227		ERJ6GEYJ183	M.RESISTOR CH 1/10W 18K	1	
R228		ERJ6GEYJ332	M.RESISTOR CH 1/10W 3.3K	1	
R229		ERJ6GEYJ103	M.RESISTOR CH 1/10W 10K	1	
R230		ERJ6GEYJ102	M.RESISTOR CH 1/10W 1K	1	

Ref.No.		Part No.	Part Name & Description	Pcs	Remarks
R231		ERJ6GEYJ103	M.RESISTOR CH 1/10W 10K	1	
R232		ERJ6GEYJ272	M.RESISTOR CH 1/10W 2.7K	1	
R233		ERJ6GEYJ561	M.RESISTOR CH 1/10W 560	1	
R235		ERJ6GEYJ103	M.RESISTOR CH 1/10W 10K	1	
R236		ERJ6GEYJ331	M.RESISTOR CH 1/10W 330	1	
R301,02		ERJ6GEYJ103	M.RESISTOR CH 1/10W 10K	2	
R304		ERJ6GEYG223	M.RESISTOR CH 1/10W 22K	1	
R306		ERJ6GEYJ103	M.RESISTOR CH 1/10W 10K	1	
R307		ERJ6GEYJ153	M.RESISTOR CH 1/10W 15K	1	
R308		ERJ6GEYJ681	M.RESISTOR CH 1/10W 680	1	
R309		ERJ6GEYJ470	M.RESISTOR CH 1/10W 47	1	
R310		ERJ6GEYJ102	M.RESISTOR CH 1/10W 1K	1	
R311		ERJ6GEYJ393	M.RESISTOR CH 1/10W 39K	1	
R312		ERJ6GEYJ104	M.RESISTOR CH 1/10W 100K	1	
R313		ERJ6GEYJ102	M.RESISTOR CH 1/10W 1K	1	
R314		ERJ6GEYJ332	M.RESISTOR CH 1/10W 3.3K	1	
R315		ERJ6GEYJ103	M.RESISTOR CH 1/10W 10K	1	
R316		ERJ6GEYJ332	M.RESISTOR CH 1/10W 3.3K	1	
R317		ERJ6GEYJ102	M.RESISTOR CH 1/10W 1K	1	
R318-20		ERJ6GEYJ104	M.RESISTOR CH 1/10W 100K	3	
R321		ERJ6GEYJ102	M.RESISTOR CH 1/10W 1K	1	
R322		ERJ6GEYJ103	M.RESISTOR CH 1/10W 10K	1	
R323		ERJ6GEYJ102	M.RESISTOR CH 1/10W 1K	1	
R324		ERJ6GEYG112	M.RESISTOR CH 1/10W 1.1K	1	
R325		ERJ6GEY0R00	M.RESISTOR CH 1/10W 0	1	
R326		ERJ6GEYJ104	M.RESISTOR CH 1/10W 100K	1	
R327		ERJ6GEYJ102	M.RESISTOR CH 1/10W 1K	1	
R328		ERJ6GEYJ123	M.RESISTOR CH 1/10W 12K	1	
R329		ERJ6GEYJ104	M.RESISTOR CH 1/10W 100K	1	
R330		ERJ6GEYJ103	M.RESISTOR CH 1/10W 10K	1	
R331		ERJ6GEYJ100	M.RESISTOR CH 1/10W 10	1	
R333,34		ERJ6GEYG223	M.RESISTOR CH 1/10W 22K	2	
R335		ERJ6GEYJ472	M.RESISTOR CH 1/10W 4.7K	1	
R336		ERJ6GEYJ561	M.RESISTOR CH 1/10W 560	1	
R337		ERJ6GEYJ332	M.RESISTOR CH 1/10W 3.3K	1	
R338,39		VRE0034E272	M.RESISTOR CH 1/10W 2.7K	2	
R340		ERJ6GEYJ103	M.RESISTOR CH 1/10W 10K	1	
R341		VRE0034E473	M.RESISTOR CH 1/10W 47K	1	
R342		VRE0034E272	M.RESISTOR CH 1/10W 2.7K	1	
R343		VRE0034E470	M.RESISTOR CH 1/10W 47	1	
R344		VRE0034E104	M.RESISTOR CH 1/10W 100K	1	
R345		ERJ6GEYJ102	M.RESISTOR CH 1/10W 1K	1	
R346		ERJ6GEYJ333	M.RESISTOR CH 1/10W 33K	1	
R347		ERJ6GEYJ103	M.RESISTOR CH 1/10W 10K	1	
R348,49		ERJ6GEYJ102	M.RESISTOR CH 1/10W 1K	2	
R350		ERJ6GEYG223	M.RESISTOR CH 1/10W 22K	1	
R351		ERJ6GEYJ102	M.RESISTOR CH 1/10W 1K	1	
R352		ERJ6GEYJ103	M.RESISTOR CH 1/10W 10K	1	
R353		ERJ6GEYJ221	M.RESISTOR CH 1/10W 220	1	
R354		ERJ6GEYJ101	M.RESISTOR CH 1/10W 100	1	
R355		ERJ6GEYJ272	M.RESISTOR CH 1/10W 2.7K	1	
R356		ERJ6GEYJ332	M.RESISTOR CH 1/10W 3.3K	1	
R357		VRE0034E102	M.RESISTOR CH 1/10W 1K	1	
R358		VRE0034E332	M.RESISTOR CH 1/10W 3.3K	1	
R359		ERJ6GEYJ221	M.RESISTOR CH 1/10W 220	1	
R360		VRE0034E823	M.RESISTOR CH 1/10W 82K	1	
R361		VRE0034E333	M.RESISTOR CH 1/10W 33K	1	
R362		VRE0034E823	M.RESISTOR CH 1/10W 82K	1	
R363		ERJ6GEYJ104	M.RESISTOR CH 1/10W 100K	1	
R364		VRE0034E683	M.RESISTOR CH 1/10W 68K	1	
R365		VRE0034E222	M.RESISTOR CH 1/10W 2.2K	1	
R366		VRE0034E512	M.RESISTOR CH 1/10W 5.1K	1	
R367		VRE0034E822	M.RESISTOR CH 1/10W 8.2K	1	
R368		VRE0034E203	M.RESISTOR CH 1/10W 20K	1	
R369		VRE0034E911	M.RESISTOR CH 1/10W 910	1	
R401		ERJ6GEYJ104	M.RESISTOR CH 1/10W 100K	1	
R402-04		ERJ6GEYJ103	M.RESISTOR CH 1/10W 10K	3	
R405		ERJ6GEYJ332	M.RESISTOR CH 1/10W 3.3K	1	
R406		ERJ6GEYJ183	M.RESISTOR CH 1/10W 18K	1	
R407		ERJ6GEYJ132	M.RESISTOR CH 1/10W 1.3K	1	
R408		ERJ6GEYJ183	M.RESISTOR CH 1/10W 18K	1	
R409		ERJ6GEYG223	M.RESISTOR CH 1/10W 22K	1	
R410-12		ERJ6GEYJ104	M.RESISTOR CH 1/10W 100K	3	
R413		ERJ6GEYG223	M.RESISTOR CH 1/10W 22K	1	
R414		ERJ6GEYJ152	M.RESISTOR CH 1/10W 1.5K	1	

Ref.No.		Part No.	Part Name & Description	Pcs	Remarks
R415		ERJ6GEYJ332	M.RESISTOR CH 1/10W 3.3K	1	
R416		ERJ6GEYJ102	M.RESISTOR CH 1/10W 1K	1	
R417		ERJ6GEYJ104	M.RESISTOR CH 1/10W 100K	1	
R418		ERJ6GEYJ103	M.RESISTOR CH 1/10W 10K	1	
R419		ERJ6GEYJ472	M.RESISTOR CH 1/10W 4.7K	1	
R420		ERJ6GEYJ682	M.RESISTOR CH 1/10W 6.8K	1	
R421		ERJ6GEYJ471	M.RESISTOR CH 1/10W 470	1	
R422		ERJ6GEYJ102	M.RESISTOR CH 1/10W 1K	1	
R423		ERJ6GEYJ392	M.RESISTOR CH 1/10W 3.9K	1	
R424,25		ERJ6GEYJ103	M.RESISTOR CH 1/10W 10K	2	
R426		ERJ6GEYJ102	M.RESISTOR CH 1/10W 1K	1	
R427		ERJ6GEYJ183	M.RESISTOR CH 1/10W 18K	1	
R428		ERJ6GEYJ332	M.RESISTOR CH 1/10W 3.3K	1	
R429		ERJ6GEYJ103	M.RESISTOR CH 1/10W 10K	1	
R430		ERJ6GEYJ102	M.RESISTOR CH 1/10W 1K	1	
R431		ERJ6GEYJ103	M.RESISTOR CH 1/10W 10K	1	
R432		ERJ6GEYJ272	M.RESISTOR CH 1/10W 2.7K	1	
R433		ERJ6GEYJ561	M.RESISTOR CH 1/10W 560	1	
R435		ERJ6GEYJ103	M.RESISTOR CH 1/10W 10K	1	
R436		ERJ6GEYJ331	M.RESISTOR CH 1/10W 330	1	
R501		ERJ6GEYJ103	M.RESISTOR CH 1/10W 10K	1	
R502,03		ERJ6GEYG223	M.RESISTOR CH 1/10W 22K	2	
R508		ERJ6GEYJ103	M.RESISTOR CH 1/10W 10K	1	
R509		ERJ6GEYG223	M.RESISTOR CH 1/10W 22K	1	
R551		ERJ6GEYG223	M.RESISTOR CH 1/10W 22K	1	
R552		ERJ6GEYJ103	M.RESISTOR CH 1/10W 10K	1	
R553		ERJ6GEYJ102	M.RESISTOR CH 1/10W 1K	1	
R554		ERJ6GEYJ330	M.RESISTOR CH 1/10W 33	1	
R555		ERJ6GEYJ103	M.RESISTOR CH 1/10W 10K	1	
R556		ERJ6GEYJ473	M.RESISTOR CH 1/10W 47K	1	
R557		ERJ6GEYJ330	M.RESISTOR CH 1/10W 33	1	
R558		ERJ6GEYJ103	M.RESISTOR CH 1/10W 10K	1	
R559		ERJ6GEYJ392	M.RESISTOR CH 1/10W 3.9K	1	
R560		ERJ6GEYJ101	M.RESISTOR CH 1/10W 100	1	
R561		ERJ6GEYJ103	M.RESISTOR CH 1/10W 10K	1	
R563		ERJ6GEYJ101	M.RESISTOR CH 1/10W 100	1	
R564		ERJ6GEYJ105	M.RESISTOR CH 1/10W 1M	1	
R565		ERJ6GEY0R00	M.RESISTOR CH 1/10W 0	1	
R567		ERJ6GEY0R00	M.RESISTOR CH 1/10W 0	1	
R569		ERJ6GEY0R00	M.RESISTOR CH 1/10W 0	1	
R570		ERJ6GEYJ682	M.RESISTOR CH 1/10W 6.8K	1	
R571		ERJ6GEYJ333	M.RESISTOR CH 1/10W 33K	1	
R572,73		ERJ6GEYJ220	M.RESISTOR CH 1/10W 22	2	
R574		ERDS2TJ8R2	C.RESISTOR 1/4W 8.2	1	
R575		ERJ6GEYJ682	M.RESISTOR CH 1/10W 6.8K	1	
R576		ERJ6GEYJ333	M.RESISTOR CH 1/10W 33K	1	
R577,78		ERJ6GEYJ220	M.RESISTOR CH 1/10W 22	2	
R579		ERDS2TJ8R2	C.RESISTOR 1/4W 8.2	1	
R580		ERJ6GEYJ472	M.RESISTOR CH 1/10W 4.7K	1	
R581		ERJ6GEYJ683	M.RESISTOR CH 1/10W 68K	1	
R582		ERJ6GEYJ103	M.RESISTOR CH 1/10W 10K	1	
R583		ERJ6GEYJ824	M.RESISTOR CH 1/10W 820K	1	
R584,85		ERJ6GEYJ220	M.RESISTOR CH 1/10W 22	2	
R586,87		ERJ6GEYJ273	M.RESISTOR CH 1/10W 27K	2	
R588		ERDS2TJ100	C.RESISTOR 1/4W 10	1	
R589		ERJ6GEYJ103	M.RESISTOR CH 1/10W 10K	1	
R590,91		ERJ6GEYJ222	M.RESISTOR CH 1/10W 2.2K	2	
R592		ERJ6GEYK1R0	M.RESISTOR CH 1/10W 1	1	
R593		ERJ6GEYJ472	M.RESISTOR CH 1/10W 4.7K	1	
R594		ERJ6GEYJ683	M.RESISTOR CH 1/10W 68K	1	
R595		ERJ6GEYJ103	M.RESISTOR CH 1/10W 10K	1	
R596		ERJ6GEYJ824	M.RESISTOR CH 1/10W 820K	1	
R597,98		ERJ6GEYJ220	M.RESISTOR CH 1/10W 22	2	
R599,00		ERJ6GEYJ273	M.RESISTOR CH 1/10W 27K	2	
R601		ERDS2TJ100	C.RESISTOR 1/4W 10	1	
R602		ERJ6GEYJ103	M.RESISTOR CH 1/10W 10K	1	
R603,04		ERJ6GEYJ222	M.RESISTOR CH 1/10W 2.2K	2	
R605		ERJ6GEYK1R0	M.RESISTOR CH 1/10W 1	1	
R606		ERJ6GEYJ472	M.RESISTOR CH 1/10W 4.7K	1	
R607		ERJ6GEYJ333	M.RESISTOR CH 1/10W 33K	1	
R608,09		ERJ6GEYJ220	M.RESISTOR CH 1/10W 22	2	
R610,11		ERJ6GEYJ224	M.RESISTOR CH 1/10W 220K	2	
R612		ERDS2TJ470	C.RESISTOR 1/4W 47	1	
R613		ERJ6GEYJ103	M.RESISTOR CH 1/10W 10K	1	
R614		ERJ6GEYJ683	M.RESISTOR CH 1/10W 68K	1	

Ref.No.		Part No.	Part Name & Description	Pcs	Remarks
R615		ERJ6GEYJ103	M.RESISTOR CH 1/10W 10K	1	
R616		ERJ6GEYJ824	M.RESISTOR CH 1/10W 820K	1	
R617,18		ERJ6GEYJ220	M.RESISTOR CH 1/10W 22	2	
R619,20		ERJ6GEYJ104	M.RESISTOR CH 1/10W 100K	2	
R621		ERDS2TJ6R8	C.RESISTOR 1/4W 6.8	1	
R622		ERJ6GEYJ103	M.RESISTOR CH 1/10W 10K	1	
R623,24		ERJ6GEYJ222	M.RESISTOR CH 1/10W 2.2K	2	
R625		ERJ6GEYK1R0	M.RESISTOR CH 1/10W 1	1	
R626		ERJ6GEYJ184	M.RESISTOR CH 1/10W 180K	1	
R627,28		ERJ6GEYJ103	M.RESISTOR CH 1/10W 10K	2	
R629,30		ERJ6GEYJ220	M.RESISTOR CH 1/10W 22	2	
R631,32		ERJ6GEYJ104	M.RESISTOR CH 1/10W 100K	2	
R633		ERDS2TJ6R8	C.RESISTOR 1/4W 6.8	1	
R634		ERJ6GEYJ103	M.RESISTOR CH 1/10W 10K	1	
R635,36		ERJ6GEYJ222	M.RESISTOR CH 1/10W 2.2K	2	
R637		ERJ6GEYK1R0	M.RESISTOR CH 1/10W 1	1	
R638		ERJ6GEYJ184	M.RESISTOR CH 1/10W 180K	1	
R639,40		ERJ6GEYJ103	M.RESISTOR CH 1/10W 10K	2	
R641,42		ERJ6GEYJ220	M.RESISTOR CH 1/10W 22	2	
R643,44		ERJ6GEYJ104	M.RESISTOR CH 1/10W 100K	2	
R645		ERDS2TJ6R8	C.RESISTOR 1/4W 6.8	1	
R646		ERJ6GEYK1R0	M.RESISTOR CH 1/10W 1	1	
R647-50		ERJ6GEYJ823	M.RESISTOR CH 1/10W 82K	4	
R651,52		ERJ6GEYJ103	M.RESISTOR CH 1/10W 10K	2	
R655,56		ERJ6GEY0R00	M.RESISTOR CH 1/10W 0	2	
R657		ERJ6GEYJ102	M.RESISTOR CH 1/10W 1K	1	
R658		ERJ6GEY0R00	M.RESISTOR CH 1/10W 0	1	
R659		ERJ6GEYJ472	M.RESISTOR CH 1/10W 4.7K	1	
R660,61		ERJ6GEYG223	M.RESISTOR CH 1/10W 22K	2	
R662,63		ERJ6GEY0R00	M.RESISTOR CH 1/10W 0	2	
R664,65		ERJ6GEYJ392	M.RESISTOR CH 1/10W 3.9K	2	
R666		ERJ6GEYJ332	M.RESISTOR CH 1/10W 3.3K	1	
R667		ERJ6GEYJ473	M.RESISTOR CH 1/10W 47K	1	
R668,69		ERJ6GEYG223	M.RESISTOR CH 1/10W 22K	2	
R670-73		ERJ6GEYJ102	M.RESISTOR CH 1/10W 1K	4	
R677-79		ERJ6GEYJ101	M.RESISTOR CH 1/10W 100	3	
R680-82		ERJ6GEYG223	M.RESISTOR CH 1/10W 22K	3	
R701		ERJ6GEYJ104	M.RESISTOR CH 1/10W 100K	1	
R702,03		ERJ6GEYJ332	M.RESISTOR CH 1/10W 3.3K	2	
R704		ERJ6GEYJ102	M.RESISTOR CH 1/10W 1K	1	
R705		ERJ6GEYJ272	M.RESISTOR CH 1/10W 2.7K	1	
R706		ERJ6GEYJ102	M.RESISTOR CH 1/10W 1K	1	
R707,08		ERJ6GEYJ104	M.RESISTOR CH 1/10W 100K	2	
R709		ERJ6GEYJ472	M.RESISTOR CH 1/10W 4.7K	1	
R710		ERJ6GEYJ682	M.RESISTOR CH 1/10W 6.8K	1	
R718		ERJ6GEYJ272	M.RESISTOR CH 1/10W 2.7K	1	
R719,20		ERJ6GEYJ332	M.RESISTOR CH 1/10W 3.3K	2	
R728,29		ERJ6GEYJ821	M.RESISTOR CH 1/10W 820	2	
R730		ERJ6GEYJ681	M.RESISTOR CH 1/10W 680	1	
R731		ERJ6GEY0R00	M.RESISTOR CH 1/10W 0	1	
R732		ERJ6GEYG112	M.RESISTOR CH 1/10W 1.1K	1	
R733		ERJ6GEYJ103	M.RESISTOR CH 1/10W 10K	1	
R734		ERJ6GEYJ183	M.RESISTOR CH 1/10W 18K	1	
R735		ERJ6GEYJ562	M.RESISTOR CH 1/10W 5.6K	1	
R736		ERJ6GEYJ104	M.RESISTOR CH 1/10W 100K	1	
R737,38		ERJ6GEYJ122	M.RESISTOR CH 1/10W 1.2K	2	
R739		VRE0034E362	M.RESISTOR CH 1/10W 3.6K	1	
R740		ERJ6GEYJ122	M.RESISTOR CH 1/10W 1.2K	1	
R741,42		ERJ6GEYJ103	M.RESISTOR CH 1/10W 10K	2	
R743-45		ERJ6GEYJ473	M.RESISTOR CH 1/10W 47K	3	
R801		ERJ6GEYJ104	M.RESISTOR CH 1/10W 100K	1	
R802,03		ERJ6GEYJ332	M.RESISTOR CH 1/10W 3.3K	2	
R804		ERJ6GEYJ102	M.RESISTOR CH 1/10W 1K	1	
R805		ERJ6GEYJ272	M.RESISTOR CH 1/10W 2.7K	1	
R806		ERJ6GEYJ102	M.RESISTOR CH 1/10W 1K	1	
R807,08		ERJ6GEYJ104	M.RESISTOR CH 1/10W 100K	2	
R809		ERJ6GEYJ472	M.RESISTOR CH 1/10W 4.7K	1	
R810		ERJ6GEYJ682	M.RESISTOR CH 1/10W 6.8K	1	
R818		ERJ6GEYJ272	M.RESISTOR CH 1/10W 2.7K	1	
R819,20		ERJ6GEYJ332	M.RESISTOR CH 1/10W 3.3K	2	
R828,29		ERJ6GEYJ821	M.RESISTOR CH 1/10W 820	2	
R830		ERJ6GEYJ681	M.RESISTOR CH 1/10W 680	1	
R831		ERJ6GEY0R00	M.RESISTOR CH 1/10W 0	1	
R832		ERJ6GEYG112	M.RESISTOR CH 1/10W 1.1K	1	
R833		ERJ6GEYJ103	M.RESISTOR CH 1/10W 10K	1	

Ref.No.		Part No.	Part Name & Description	Pcs	Remarks
R834		ERJ6GEYJ183	M.RESISTOR CH 1/10W 18K	1	
R835		ERJ6GEYJ562	M.RESISTOR CH 1/10W 5.6K	1	
R836		ERJ6GEYJ104	M.RESISTOR CH 1/10W 100K	1	
R837,38		ERJ6GEYJ122	M.RESISTOR CH 1/10W 1.2K	2	
R839		VRE0034E362	M.RESISTOR CH 1/10W 3.6K	1	
R840		ERJ6GEYJ122	M.RESISTOR CH 1/10W 1.2K	1	
R841,42		ERJ6GEYJ103	M.RESISTOR CH 1/10W 10K	2	
R843,44		ERJ6GEYJ473	M.RESISTOR CH 1/10W 47K	2	
R845		ERJ6GEYJ273	M.RESISTOR CH 1/10W 27K	1	
R901		ERJ6GEYG223	M.RESISTOR CH 1/10W 22K	1	
R904		ERJ6GEYJ103	M.RESISTOR CH 1/10W 10K	1	
R905		ERJ6GEYG223	M.RESISTOR CH 1/10W 22K	1	
R906		ERJ6GEYJ102	M.RESISTOR CH 1/10W 1K	1	
R907		ERJ6GEYJ103	M.RESISTOR CH 1/10W 10K	1	
R909		ERJ6GEYJ101	M.RESISTOR CH 1/10W 100	1	
R910		ERJ6GEYJ103	M.RESISTOR CH 1/10W 10K	1	
R914		ERJ6GEYJ104	M.RESISTOR CH 1/10W 100K	1	
R917,18		ERJ6GEYJ561	M.RESISTOR CH 1/10W 560	2	
R919,20		ERJ6GEYJ222	M.RESISTOR CH 1/10W 2.2K	2	
R921		VRE0034E223	M.RESISTOR CH 1/10W 22K	1	
R922,23		ERJ6GEYJ104	M.RESISTOR CH 1/10W 100K	2	
R924		ERJ6GEYJ393	M.RESISTOR CH 1/10W 39K	1	
R925		ERJ6GEYJ123	M.RESISTOR CH 1/10W 12K	1	
R926		ERJ6GEYJ334	M.RESISTOR CH 1/10W 330K	1	
R927		ERJ6GEYJ103	M.RESISTOR CH 1/10W 10K	1	
R928		ERJ6GEYJ104	M.RESISTOR CH 1/10W 100K	1	
R929		ERJ6GEYJ562	M.RESISTOR CH 1/10W 5.6K	1	
R930-32		ERJ6GEYJ102	M.RESISTOR CH 1/10W 1K	3	
R933		ERJ6GEYJ392	M.RESISTOR CH 1/10W 3.9K	1	
R934		ERJ6GEYJ823	M.RESISTOR CH 1/10W 82K	1	
R935		ERJ6GEYJ273	M.RESISTOR CH 1/10W 27K	1	
R936		ERJ6GEYJ392	M.RESISTOR CH 1/10W 3.9K	1	
R937-39		ERJ6GEYJ102	M.RESISTOR CH 1/10W 1K	3	
R940		ERJ6GEYJ560	M.RESISTOR CH 1/10W 56	1	
R941		ERJ6GEYJ392	M.RESISTOR CH 1/10W 3.9K	1	
R942		ERJ6GEYJ102	M.RESISTOR CH 1/10W 1K	1	
R943		ERJ6GEYJ222	M.RESISTOR CH 1/10W 2.2K	1	
R944		ERJ6GEYJ823	M.RESISTOR CH 1/10W 82K	1	
R945		ERJ6GEYJ273	M.RESISTOR CH 1/10W 27K	1	
R946-48		ERJ6GEYJ102	M.RESISTOR CH 1/10W 1K	3	
R949		ERJ6GEYJ390	M.RESISTOR CH1/10W 39	1	
R950		ERJ6GEYJ392	M.RESISTOR CH 1/10W 3.9K	1	
R951		ERJ6GEYJ102	M.RESISTOR CH 1/10W 1K	1	
R952		ERJ6GEYJ222	M.RESISTOR CH 1/10W 2.2K	1	
R953		ERJ6GEYJ823	M.RESISTOR CH 1/10W 82K	1	
R954		ERJ6GEYJ273	M.RESISTOR CH 1/10W 27K	1	
R955,56		ERJ6GEYJ102	M.RESISTOR CH 1/10W 1K	2	
R957		ERJ6GEYJ222	M.RESISTOR CH 1/10W 2.2K	1	
R958		ERJ6GEYJ823	M.RESISTOR CH 1/10W 82K	1	
R959		ERJ6GEYJ273	M.RESISTOR CH 1/10W 27K	1	
R960		ERJ6GEYJ101	M.RESISTOR CH 1/10W 100	1	
R961		ERJ6GEYJ103	M.RESISTOR CH 1/10W 10K	1	
R962		ERJ6GEYJ102	M.RESISTOR CH 1/10W 1K	1	
R963		ERJ6GEYJ560	M.RESISTOR CH 1/10W 56	1	
R964		ERJ6GEY0R00	M.RESISTOR CH 1/10W 0	1	
R965		ERJ6GEYG223	M.RESISTOR CH 1/10W 22K	1	
SW101		VSS023703	SWITCH	1	
SW201		VSS023703	SWITCH	1	
SW301		VSS023703	SWITCH	1	
SW401		VSS023703	SWITCH	1	
T551,52		VLT0602	TRANSFORMER	2	
T553,54		VLT0603	TRANSFORMER	2	
T555		VLT0304	TRANSFORMER	1	
T556-58		VLT0603	TRANSFORMER	3	
TP1		VJR0646	TEST POINT	1	
TP101,02		VJR0646	TEST POINT	2	

Ref.No.		Part No.	Part Name & Description	Pcs	Remarks
TP104,05		VJR0646	TEST POINT	2	
TP201		VJR0646	TEST POINT	1	
TP301,02		VJR0646	TEST POINT	2	
TP304,05		VJR0646	TEST POINT	2	
TP401		VJR0646	TEST POINT	1	
TP501		VJR0646	TEST POINT	1	
TP551-58		VJR0646	TEST POINT	8	
TP601-09		VJR0646	TEST POINT	9	
TP702-04		VJR0646	TEST POINT	3	
TP802-04		VJR0646	TEST POINT	3	
TP901		VJR0646	TEST POINT	1	
TPG101		VJR0646	TEST POINT	1	
TPG301		VJR0646	TEST POINT	1	
TPG551		VJR0646	TEST POINT	1	
TPG901		VJR0646	TEST POINT	1	
VR101		VRV0109B103	V.RESISTOR 10K	1	
VR103		VRV0109B502	V.RESISTOR 5K	1	
VR201		VRV0109B203	V.RESISTOR 20K	1	
VR202		VRV0064B103	V.RESISTOR 10K	1	
VR203		VRV0109B502	V.RESISTOR 5K	1	
VR205		VRV0109B103	V.RESISTOR 10K	1	
VR206		VRV0109B502	V.RESISTOR 5K	1	
VR301		VRV0109B103	V.RESISTOR 10K	1	
VR303		VRV0109B502	V.RESISTOR 5K	1	
VR402		VRV0064B103	V.RESISTOR 10K	1	
VR403		VRV0109B502	V.RESISTOR 5K	1	
VR405		VRV0109B103	V.RESISTOR 10K	1	
VR406		VRV0109B502	V.RESISTOR 5K	1	
VR551,52		VRV0109B103	V.RESISTOR 10K	2	
VR701		VRV0109B203	V.RESISTOR 20K	1	
VR703		VRV0109B203	V.RESISTOR 20K	1	
VR704		VRV0109B303	V.RESISTOR 30K	1	
VR705		VRV0109B203	V.RESISTOR 20K	1	
VR801		VRV0109B203	V.RESISTOR 20K	1	
VR803-05		VRV0109B203	V.RESISTOR 20K	3	
VR901		VRV0109B502	V.RESISTOR 5K	1	
X551		VSX0246	CRYSTAL OSCILLATOR	1	
			MISCELLANEOUS		
		VML2143	CARD PULLER	1	
		VML2144	CARD PULLER	1	
		VMZ1547	BARRIER	1	
		VXA3966	P.C.B. SHIELD PLATE	1	
		XYNV3+K6FR	SCREW	5	

Ref.No.		Part No.	Part Name & Description	Pcs	Remarks
	■	VEP84095E	P.C.BOARD W/COMPONENT W6 AUDIO		FOR AU-63H,AU-62H
			CAPACITORS		
C1,C2		ECEA1CU470	E.CAPACITOR 16V 47U	2	
C3		ECEA0JU101	E.CAPACITOR 6.3V 100U	1	
C5		ECEA1HNR33S	E.CAPACITOR 50V 0.33U	1	
C6		ECUM1E473KBN	C.CAPACITOR CH 25V 0.047U	1	
C8		ECEA1CN100S	E.CAPACITOR 16V 10U	1	
C9		ECEA1CU100	E.CAPACITOR 16V 10U	1	
C10		ECEA1CN100S	E.CAPACITOR 16V 10U	1	
C11		ECUM1H272KBN	C.CAPACITOR CH 50V 2700P	1	
C12		ECEA1CU100	E.CAPACITOR 16V 10U	1	
C13,14		ECEA1CU470	E.CAPACITOR 16V 47U	2	
C18		ECUM1H681JCN	C.CAPACITOR CH 50V 680P	1	
C106		ECUM1H470JCN	C.CAPACITOR CH 50V 47P	1	
C107		ECUM1E104ZFN	C.CAPACITOR CH 25V 0.1U	1	
C108		ECEA1CU101	E.CAPACITOR 16V 100U	1	
C109		ECEA1CN470S	E.CAPACITOR 16V 47U	1	
C110		ECEA1CU101	E.CAPACITOR 16V 100U	1	
C111		ECUM1E104ZFN	C.CAPACITOR CH 25V 0.1U	1	
C112,13		ECEA1CU101	E.CAPACITOR 16V 100U	2	
C114		ECEA1CN100S	E.CAPACITOR 16V 10U	1	
C115		ECUM1H220JCN	C.CAPACITOR CH 50V 22P	1	
C116		ECEA1CN100S	E.CAPACITOR 16V 10U	1	
C118		ECEA1CU470	E.CAPACITOR 16V 47U	1	
C120		ECUM1H470JCN	C.CAPACITOR CH 50V 47P	1	
C121		ECUM1H820JCN	C.CAPACITOR CH 50V 82P	1	
C122		ECUM1H151JCN	C.CAPACITOR CH 50V 150P	1	
C124		ECUM1H470JCN	C.CAPACITOR CH 50V 47P	1	
C125		ECEA0JU471	E.CAPACITOR 6.3V 470U	1	
C127,28		ECEA1CU470	E.CAPACITOR 16V 47U	2	
C129		ECQM1H473JF	P.CAPACITOR 50V 0.047U	1	
C131,32		ECEA1CU470	E.CAPACITOR 16V 47U	2	
C133		ECUM1H562KBN	C.CAPACITOR CH 50V 5600P	1	
C134,35		ECEA1CN100S	E.CAPACITOR 16V 10U	2	
C136		ECQP1H472FZ	P.CAPACITOR 50V 4700P	1	
C137		ECEA1CU100	E.CAPACITOR 16V 10U	1	
C138		ECQM1H473JF	P.CAPACITOR 50V 0.047U	1	
C139		ECEA1HUR22	E.CAPACITOR 50V 0.22U	1	
C140,41		ECEA1HUR68	E.CAPACITOR 50V 0.68U	2	
C142		ECEA1HUR22	E.CAPACITOR 50V 0.22U	1	
C143		ECQM1H473JF	P.CAPACITOR 50V 0.047U	1	
C144		ECEA1CU100	E.CAPACITOR 16V 10U	1	
C145		ECQP1H472FZ	P.CAPACITOR 50V 4700P	1	
C147		ECQP1H103FZ	P.CAPACITOR 50V 0.01U	1	
C148,49		ECQM1H394JF	P.CAPACITOR 50V 0.39U	2	
C306		ECUM1H470JCN	C.CAPACITOR CH 50V 47P	1	
C307		ECUM1E104ZFN	C.CAPACITOR CH 25V 0.1U	1	
C308		ECEA1CU101	E.CAPACITOR 16V 100U	1	
C309		ECEA1CN470S	E.CAPACITOR 16V 47U	1	
C310		ECEA1CU101	E.CAPACITOR 16V 100U	1	
C311		ECUM1E104ZFN	C.CAPACITOR CH 25V 0.1U	1	
C312,13		ECEA1CU101	E.CAPACITOR 16V 100U	2	
C314		ECEA1CN100S	E.CAPACITOR 16V 10U	1	
C315		ECUM1H220JCN	C.CAPACITOR CH 50V 22P	1	
C316		ECEA1CN100S	E.CAPACITOR 16V 10U	1	
C318		ECEA1CU470	E.CAPACITOR 16V 47U	1	
C320		ECUM1H470JCN	C.CAPACITOR CH 50V 47P	1	
C321		ECUM1H820JCN	C.CAPACITOR CH 50V 82P	1	
C322		ECUM1H151JCN	C.CAPACITOR CH 50V 150P	1	
C324		ECUM1H470JCN	C.CAPACITOR CH 50V 47P	1	
C325		ECEA0JU471	E.CAPACITOR 6.3V 470U	1	
C327,28		ECEA1CU470	E.CAPACITOR 16V 47U	2	
C329		ECQM1H473JF	P.CAPACITOR 50V 0.047U	1	
C331,32		ECEA1CU470	E.CAPACITOR 16V 47U	2	
C333		ECUM1H562KBN	C.CAPACITOR CH 50V 5600P	1	
C334,35		ECEA1CN100S	E.CAPACITOR 16V 10U	2	

Ref.No.		Part No.	Part Name & Description	Pcs	Remarks
C336		ECQP1H472FZ	P.CAPACITOR 50V 4700P	1	
C337		ECEA1CU100	E.CAPACITOR 16V 10U	1	
C338		ECQM1H473JF	P.CAPACITOR 50V 0.047U	1	
C339		ECEA1HUR22	E.CAPACITOR 50V 0.22U	1	
C340,41		ECEA1HUR68	E.CAPACITOR 50V 0.68U	2	
C342		ECEA1HUR22	E.CAPACITOR 50V 0.22U	1	
C343		ECQM1H473JF	P.CAPACITOR 50V 0.047U	1	
C344		ECEA1CU100	E.CAPACITOR 16V 10U	1	
C345		ECQP1H472FZ	P.CAPACITOR 50V 4700P	1	
C347		ECQP1H103FZ	P.CAPACITOR 50V 0.01U	1	
C348,49		ECQM1H394JF	P.CAPACITOR 50V 0.39U	2	
C501		ECEA1CU101	E.CAPACITOR 16V 100U	1	
C503		ECEA1CU220	E.CAPACITOR 16V 22U	1	
C553		ECEA1AU101	E.CAPACITOR 10V 100U	1	
C701		ECEA1CN470S	E.CAPACITOR 16V 47U	1	
C702		ECUM1H182KBN	C.CAPACITOR CH 50V 1800P	1	
C703		ECUM1H821JCN	C.CAPACITOR CH 50V 820P	1	
C712		ECEA1HU4R7	E.CAPACITOR 50V 4.7U	1	
C713		ECEA1HU3R3	E.CAPACITOR 50V 3.3U	1	
C714		ECQM1H682JF	P.CAPACITOR 50V 6800P	1	
C715		ECQM1H102JF	P.CAPACITOR 50V 1000P	1	
C716		ECQM1H223JF	P.CAPACITOR 50V 0.022U	1	
C717		ECEA1CU100	E.CAPACITOR 16V 10U	1	
C719		ECEA1HU4R7	E.CAPACITOR 50V 4.7U	1	
C720		ECEA1CU470	E.CAPACITOR 16V 47U	1	
C721		ECQM1H103JF	P.CAPACITOR 50V 0.01U	1	
C722		ECQB1H332JF	P.CAPACITOR 50V 3300P	1	
C723		ECUM1H272KBN	C.CAPACITOR CH 50V 2700P	1	
C724,25		ECUM1H102KBN	C.CAPACITOR CH 50V 1000P	2	
C726		ECEA1CN100S	E.CAPACITOR 16V 10U	1	
C727		ECEA1CU101	E.CAPACITOR 16V 100U	1	
C728		ECUM1E104ZFN	C.CAPACITOR CH 25V 0.1U	1	
C729,30		ECUM1H103KBN	C.CAPACITOR CH 50V 0.01U	2	
C732		ECQM1H223JF	P.CAPACITOR 50V 0.022U	1	
C733		ECUM1H122KBN	C.CAPACITOR CH 50V 1200P	1	
C801		ECEA1CN470S	E.CAPACITOR 16V 47U	1	
C802		ECUM1H182KBN	C.CAPACITOR CH 50V 1800P	1	
C803		ECUM1H821JCN	C.CAPACITOR CH 50V 820P	1	
C804,05		ECUM1H222KBN	C.CAPACITOR CH 50V 2200P	2	
C812		ECEA1HU4R7	E.CAPACITOR 50V 4.7U	1	
C813		ECEA1HU3R3	E.CAPACITOR 50V 3.3U	1	
C814		ECQM1H682JF	P.CAPACITOR 50V 6800P	1	
C815		ECQM1H102JF	P.CAPACITOR 50V 1000P	1	
C816		ECQM1H223JF	P.CAPACITOR 50V 0.022U	1	
C817		ECEA1CU100	E.CAPACITOR 16V 10U	1	
C819		ECEA1HU4R7	E.CAPACITOR 50V 4.7U	1	
C820		ECEA1CU470	E.CAPACITOR 16V 47U	1	
C821		ECQM1H103JF	P.CAPACITOR 50V 0.01U	1	
C822		ECQB1H332JF	P.CAPACITOR 50V 3300P	1	
C823		ECUM1H272KBN	C.CAPACITOR CH 50V 2700P	1	
C824,25		ECUM1H102KBN	C.CAPACITOR CH 50V 1000P	2	
C826		ECEA1CN100S	E.CAPACITOR 16V 10U	1	
C827		ECEA1CU101	E.CAPACITOR 16V 100U	1	
C828		ECUM1E104ZFN	C.CAPACITOR CH 25V 0.1U	1	
C829,30		ECUM1H103KBN	C.CAPACITOR CH 50V 0.01U	2	
C832		ECQM1H223JF	P.CAPACITOR 50V 0.022U	1	
C833		ECUM1H122KBN	C.CAPACITOR CH 50V 1200P	1	
C903		ECUM1E104ZFN	C.CAPACITOR CH 25V 0.1U	1	
C904		ECEA1CU101	E.CAPACITOR 16V 100U	1	
C905		ECUM1E104ZFN	C.CAPACITOR CH 25V 0.1U	1	
C906,07		ECEA1CU101	E.CAPACITOR 16V 100U	2	
C917		ECEA1CU100	E.CAPACITOR 16V 10U	1	
C918		ECUM1E104ZFN	C.CAPACITOR CH 25V 0.1U	1	
C920		ECUM1H151JCN	C.CAPACITOR CH 50V 150P	1	
C921,22		ECUM1H103KBN	C.CAPACITOR CH 50V 0.01U	2	
C923		ECUM1H331JCN	C.CAPACITOR CH 50V 330P	1	
C924		ECEA1HU010	E.CAPACITOR 50V 1U	1	
C925		ECQM1H223JF	P.CAPACITOR 50V 0.022U	1	
C926		ECUM1H103KBN	C.CAPACITOR CH 50V 0.01U	1	
C929		ECUM1H151JCN	C.CAPACITOR CH 50V 150P	1	
C930,31		ECUM1H103KBN	C.CAPACITOR CH 50V 0.01U	2	
C932		ECUM1H271JCN	C.CAPACITOR CH 50V 270P	1	
C933		ECUM1H391JCN	C.CAPACITOR CH 50V 390P	1	
C934,35		ECUM1H103KBN	C.CAPACITOR CH 50V 0.01U	2	
C936		ECEA1CU100	E.CAPACITOR 16V 10U	1	

Ref.No.		Part No.	Part Name & Description	Pcs	Remarks
C937		ECUM1E104ZFN	C.CAPACITOR CH 25V 0.1U	1	
C938-40		ECEA1CU101	E.CAPACITOR 16V 100U	3	
C941		ECEA1HU3R3	E.CAPACITOR 50V 3.3U	1	
C942		ECEA1CU470	E.CAPACITOR 16V 47U	1	
C944		ECUM1H103KBN	C.CAPACITOR CH 50V 0.01U	1	
C945,46		ECEA1CU101	E.CAPACITOR 16V 100U	2	
C947,48		ECEA1HU010	E.CAPACITOR 50V 1U	2	
C949		ECUM1E104ZFN	C.CAPACITOR CH 25V 0.1U	1	
C950		ECEA1CU101	E.CAPACITOR 16V 100U	1	
D1		MA153	DIODE	1	
D2		MA151K	DIODE	1	
D3,D4		MA3024	DIODE	2	
D7		MA151WK	DIODE	1	
D501		MA153	DIODE	1	
D502		MA151WA	DIODE	1	
D903		MA151K	DIODE	1	
FL101		EIR7QH007Q	FILTER	1	
FL102		VLF0829	FILTER	1	
FL103		ELM7Q306A	COIL	1	
FL301		EIR7QH007Q	FILTER	1	
FL302		VLF0829	FILTER	1	
FL303		ELM7Q306A	COIL	1	
FL901		ELB4L053	FILTER	1	
FL902		ELB4M043	FILTER	1	
IC2,C3		UPD4053BG	IC	2	
IC4		NJM4558M	IC	1	
IC5,C6		RC082BM	IC	2	
IC101		AN6558S	IC	1	
IC104		NJM4558M	IC	1	
IC105		TEA0666T	IC	1	
IC106		AN78N09	IC	1	
IC107		AN79N09	IC	1	
IC108		NJM4558M	IC	1	
IC301		AN6558S	IC	1	
IC304		NJM4558M	IC	1	
IC305		TEA0666T	IC	1	
IC306		AN78N09	IC	1	
IC307		AN79N09	IC	1	
IC308		NJM4558M	IC	1	
IC701		NJM4558M	IC	1	
IC703		NJM4558M	IC	1	
IC801		NJM4558M	IC	1	
IC803		NJM4558M	IC	1	
IC805		BA7700K1	IC	1	
IC901		AN78L12	IC	1	
IC902		AN78L05	IC	1	
IC903		AN79L09	IC	1	
IC904		AN78L09	IC	1	
L101,02		VLQEL05S101K	COIL 100UH	2	
L301,02		VLQEL05S101K	COIL 100UH	2	
L552		VLQEL05S471K	COIL 470UH	1	
L906,07		VLQEL05S101K	COIL 100UH	2	
L909		VLQEL05S271J	COIL 270UH	1	
L910-13		VLQEL05S101K	COIL 100UH	4	
P101		VJP1232R	CONNECTOR(MALE) 5P	1	
P301		VJP1232G	CONNECTOR(MALE)	1	
P553		VJP1230T	CONNECTOR(MALE) 3P	1	

Ref.No.		Part No.	Part Name & Description	Pcs	Remarks
Q1		2SD602	TRANSISTOR	1	(Q,R)
Q11		UN2211	TRANSISTOR-RESISTOR	1	
Q12		2SB710	TRANSISTOR	1	
Q13		UN2113	TRANSISTOR-RESISTOR	1	
Q14		2SD1328-R	TRANSISTOR CHIP	1	(Q,R)
Q15		UN2213	TRANSISTOR-RESISTOR	1	
Q107		2SD1328-R	TRANSISTOR CHIP	1	(Q,R)
Q108		UN2113	TRANSISTOR-RESISTOR	1	
Q114		2SK146	TRANSISTOR	1	(B,L)
Q115		2SD601-R	TRANSISTOR CHIP	1	(Q,R)
Q116		2SB709-R	TRANSISTOR CHIP	1	(Q,R)
Q117		2SD601-R	TRANSISTOR CHIP	1	(Q,R)
Q118-20		UN2213	TRANSISTOR-RESISTOR	3	
Q307		2SD1328-R	TRANSISTOR CHIP	1	(Q,R)
Q308		UN2113	TRANSISTOR-RESISTOR	1	
Q314		2SK146	TRANSISTOR	1	(B,L)
Q315		2SD601-R	TRANSISTOR CHIP	1	(Q,R)
Q316		2SB709-R	TRANSISTOR CHIP	1	(Q,R)
Q317		2SD601-R	TRANSISTOR CHIP	1	(Q,R)
Q318-20		UN2213	TRANSISTOR-RESISTOR	3	
Q501		2SB709-R	TRANSISTOR CHIP	1	(Q,R)
Q502		UN2113	TRANSISTOR-RESISTOR	1	
Q503		UN2213	TRANSISTOR-RESISTOR	1	
Q504		2SD602	TRANSISTOR	1	(Q,R)
Q701		2SD1328-R	TRANSISTOR CHIP	1	(Q,R)
Q702		2SD601-R	TRANSISTOR CHIP	1	(Q,R)
Q801		2SD1328-R	TRANSISTOR CHIP	1	(Q,R)
Q802		2SD601-R	TRANSISTOR CHIP	1	(Q,R)
Q911		2SD601-R	TRANSISTOR CHIP	1	(Q,R)
Q912		2SC2404-B	TRANSISTOR CHIP	1	(B,C)
Q913,14		2SD601-R	TRANSISTOR CHIP	2	(Q,R)
Q915		2SC2404-B	TRANSISTOR CHIP	1	(B,C)
Q916,17		2SD601-R	TRANSISTOR CHIP	2	(Q,R)
Q919		UN2213	TRANSISTOR-RESISTOR	1	
Q920		UN2113	TRANSISTOR-RESISTOR	1	
			RESISTORS		
R1		ERJ6GEYJ102	M.RESISTOR CH 1/10W 1K	1	
R2		ERJ6GEYG223	M.RESISTOR CH 1/10W 22K	1	
R12		ERJ6GEYJ100	M.RESISTOR CH 1/10W 10	1	
R13		ERJ6GEYJ473	M.RESISTOR CH 1/10W 47K	1	
R14		ERJ6GEYJ102	M.RESISTOR CH 1/10W 1K	1	
R15		ERJ6GEY0R00	M.RESISTOR CH 1/10W 0	1	
R16		ERJ6GEYJ224	M.RESISTOR CH 1/10W 220K	1	
R17		ERJ6GEYJ562	M.RESISTOR CH 1/10W 5.6K	1	
R18		ERJ6GEYJ473	M.RESISTOR CH 1/10W 47K	1	
R19		ERJ6GEYJ331	M.RESISTOR CH 1/10W 330	1	
R20		ERJ6GEYJ473	M.RESISTOR CH 1/10W 47K	1	
R21		ERJ6GEYJ123	M.RESISTOR CH 1/10W 12K	1	
R22		ERJ6GEYJ104	M.RESISTOR CH 1/10W 100K	1	
R23		ERJ6GEYJ102	M.RESISTOR CH 1/10W 1K	1	
R24		ERJ6GEYJ470	M.RESISTOR CH 1/10W 47	1	
R25		ERJ6GEYJ332	M.RESISTOR CH 1/10W 3.3K	1	
R26		ERJ6GEYJ473	M.RESISTOR CH 1/10W 47K	1	
R27		ERJ6GEYJ472	M.RESISTOR CH 1/10W 4.7K	1	
R29		ERJ6GEYJ470	M.RESISTOR CH 1/10W 47	1	
R30		ERJ6GEYJ102	M.RESISTOR CH 1/10W 1K	1	
R39		ERJ6GEYJ104	M.RESISTOR CH 1/10W 100K	1	
R42		ERJ6GEYG223	M.RESISTOR CH 1/10W 22K	1	
R44		ERJ6GEYJ104	M.RESISTOR CH 1/10W 100K	1	
R48		ERJ6GEYJ104	M.RESISTOR CH 1/10W 100K	1	
R50		ERJ6GEYG223	M.RESISTOR CH 1/10W 22K	1	
R51		ERJ6GEYJ103	M.RESISTOR CH 1/10W 10K	1	
R53		ERJ6GEY0R00	M.RESISTOR CH 1/10W 0	1	
R55		ERJ6GEYJ682	M.RESISTOR CH 1/10W 6.8K	1	
R120		ERJ6GEYJ104	M.RESISTOR CH 1/10W 100K	1	
R121		ERJ6GEYJ102	M.RESISTOR CH 1/10W 1K	1	
R122		ERJ6GEYJ103	M.RESISTOR CH 1/10W 10K	1	
R123		ERJ6GEYJ102	M.RESISTOR CH 1/10W 1K	1	
R124		ERJ6GEYG112	M.RESISTOR CH 1/10W 1.1K	1	
R125		ERJ6GEY0R00	M.RESISTOR CH 1/10W 0	1	
R126		ERJ6GEYJ104	M.RESISTOR CH 1/10W 100K	1	
R127		ERJ6GEYJ102	M.RESISTOR CH 1/10W 1K	1	

Ref.No.		Part No.	Part Name & Description	Pcs	Remarks
R128		ERJ6GEYJ123	M.RESISTOR CH 1/10W 12K	1	
R129		ERJ6GEYJ104	M.RESISTOR CH 1/10W 100K	1	
R131		ERJ6GEYJ100	M.RESISTOR CH 1/10W 10	1	
R138,39		VRE0034E272	M.RESISTOR CH 1/10W 2.7K	2	
R140		ERJ6GEYJ103	M.RESISTOR CH 1/10W 10K	1	
R141		VRE0034E473	M.RESISTOR CH 1/10W 47K	1	
R142		VRE0034E272	M.RESISTOR CH 1/10W 2.7K	1	
R143		VRE0034E470	M.RESISTOR CH 1/10W 47	1	
R144		VRE0034E104	M.RESISTOR CH 1/10W 100K	1	
R145		ERJ6GEYJ102	M.RESISTOR CH 1/10W 1K	1	
R147		ERJ6GEYJ103	M.RESISTOR CH 1/10W 10K	1	
R148,49		ERJ6GEYJ102	M.RESISTOR CH 1/10W 1K	2	
R150		ERJ6GEYG223	M.RESISTOR CH 1/10W 22K	1	
R151		ERJ6GEYJ102	M.RESISTOR CH 1/10W 1K	1	
R152		ERJ6GEYJ103	M.RESISTOR CH 1/10W 10K	1	
R153		ERJ6GEYJ221	M.RESISTOR CH 1/10W 220	1	
R154		ERJ6GEYJ101	M.RESISTOR CH 1/10W 100	1	
R155		ERJ6GEYJ272	M.RESISTOR CH 1/10W 2.7K	1	
R156		ERJ6GEYJ332	M.RESISTOR CH 1/10W 3.3K	1	
R157		VRE0034E102	M.RESISTOR CH 1/10W 1K	1	
R158		VRE0034E332	M.RESISTOR CH 1/10W 3.3K	1	
R159		ERJ6GEYJ221	M.RESISTOR CH 1/10W 220	1	
R160		VRE0034E823	M.RESISTOR CH 1/10W 82K	1	
R161		VRE0034E333	M.RESISTOR CH 1/10W 33K	1	
R162		VRE0034E823	M.RESISTOR CH 1/10W 82K	1	
R164		VRE0034E683	M.RESISTOR CH 1/10W 68K	1	
R165		VRE0034E222	M.RESISTOR CH 1/10W 2.2K	1	
R166		VRE0034E512	M.RESISTOR CH 1/10W 5.1K	1	
R167		VRE0034E822	M.RESISTOR CH 1/10W 8.2K	1	
R168		VRE0034E203	M.RESISTOR CH 1/10W 20K	1	
R169		VRE0034E911	M.RESISTOR CH 1/10W 910	1	
R320		ERJ6GEYJ104	M.RESISTOR CH 1/10W 100K	1	
R321		ERJ6GEYJ102	M.RESISTOR CH 1/10W 1K	1	
R322		ERJ6GEYJ103	M.RESISTOR CH 1/10W 10K	1	
R323		ERJ6GEYJ102	M.RESISTOR CH 1/10W 1K	1	
R324		ERJ6GEYG112	M.RESISTOR CH 1/10W 1.1K	1	
R325		ERJ6GEY0R00	M.RESISTOR CH 1/10W 0	1	
R326		ERJ6GEYJ104	M.RESISTOR CH 1/10W 100K	1	
R327		ERJ6GEYJ102	M.RESISTOR CH 1/10W 1K	1	
R328		ERJ6GEYJ123	M.RESISTOR CH 1/10W 12K	1	
R329		ERJ6GEYJ104	M.RESISTOR CH 1/10W 100K	1	
R331		ERJ6GEYJ100	M.RESISTOR CH 1/10W 10	1	
R338,39		VRE0034E272	M.RESISTOR CH 1/10W 2.7K	2	
R340		ERJ6GEYJ103	M.RESISTOR CH 1/10W 10K	1	
R341		VRE0034E473	M.RESISTOR CH 1/10W 47K	1	
R342		VRE0034E272	M.RESISTOR CH 1/10W 2.7K	1	
R343		VRE0034E470	M.RESISTOR CH 1/10W 47	1	
R344		VRE0034E104	M.RESISTOR CH 1/10W 100K	1	
R345		ERJ6GEYJ102	M.RESISTOR CH 1/10W 1K	1	
R347		ERJ6GEYJ103	M.RESISTOR CH 1/10W 10K	1	
R348,49		ERJ6GEYJ102	M.RESISTOR CH 1/10W 1K	2	
R350		ERJ6GEYG223	M.RESISTOR CH 1/10W 22K	1	
R351		ERJ6GEYJ102	M.RESISTOR CH 1/10W 1K	1	
R352		ERJ6GEYJ103	M.RESISTOR CH 1/10W 10K	1	
R353		ERJ6GEYJ221	M.RESISTOR CH 1/10W 220	1	
R354		ERJ6GEYJ101	M.RESISTOR CH 1/10W 100	1	
R355		ERJ6GEYJ272	M.RESISTOR CH 1/10W 2.7K	1	
R356		ERJ6GEYJ332	M.RESISTOR CH 1/10W 3.3K	1	
R357		VRE0034E102	M.RESISTOR CH 1/10W 1K	1	
R358		VRE0034E332	M.RESISTOR CH 1/10W 3.3K	1	
R359		ERJ6GEYJ221	M.RESISTOR CH 1/10W 220	1	
R360		VRE0034E823	M.RESISTOR CH 1/10W 82K	1	
R361		VRE0034E333	M.RESISTOR CH 1/10W 33K	1	
R362		VRE0034E823	M.RESISTOR CH 1/10W 82K	1	
R364		VRE0034E683	M.RESISTOR CH 1/10W 68K	1	
R365		VRE0034E222	M.RESISTOR CH 1/10W 2.2K	1	
R366		VRE0034E512	M.RESISTOR CH 1/10W 5.1K	1	
R367		VRE0034E822	M.RESISTOR CH 1/10W 8.2K	1	
R368		VRE0034E203	M.RESISTOR CH 1/10W 20K	1	
R369		VRE0034E911	M.RESISTOR CH 1/10W 910	1	
R501		ERJ6GEYJ103	M.RESISTOR CH 1/10W 10K	1	
R502,03		ERJ6GEYG223	M.RESISTOR CH 1/10W 22K	2	
R508		ERJ6GEYJ103	M.RESISTOR CH 1/10W 10K	1	
R509		ERJ6GEYG223	M.RESISTOR CH 1/10W 22K	1	
R510		ERJ6GEYJ273	M.RESISTOR CH 1/10W 27K	1	

Ref.No.		Part No.	Part Name & Description	Pcs	Remarks
R511		ERJ6GEYJ103	M.RESISTOR CH 1/10W 10K	1	
R701		ERJ6GEYJ104	M.RESISTOR CH 1/10W 100K	1	
R702,03		ERJ6GEYJ332	M.RESISTOR CH 1/10W 3.3K	2	
R704		ERJ6GEYJ102	M.RESISTOR CH 1/10W 1K	1	
R705		ERJ6GEYJ272	M.RESISTOR CH 1/10W 2.7K	1	
R706		ERJ6GEYJ102	M.RESISTOR CH 1/10W 1K	1	
R707		ERJ6GEYJ104	M.RESISTOR CH 1/10W 100K	1	
R709		ERJ6GEYJ472	M.RESISTOR CH 1/10W 4.7K	1	
R710		ERJ6GEYJ682	M.RESISTOR CH 1/10W 6.8K	1	
R728,29		ERJ6GEYJ821	M.RESISTOR CH 1/10W 820	2	
R730		ERJ6GEYJ681	M.RESISTOR CH 1/10W 680	1	
R731		ERJ6GEY0R00	M.RESISTOR CH 1/10W 0	1	
R732		ERJ6GEYG112	M.RESISTOR CH 1/10W 1.1K	1	
R733		ERJ6GEYJ103	M.RESISTOR CH 1/10W 10K	1	
R734		ERJ6GEYJ183	M.RESISTOR CH 1/10W 18K	1	
R735		ERJ6GEYJ562	M.RESISTOR CH 1/10W 5.6K	1	
R736		ERJ6GEYJ104	M.RESISTOR CH 1/10W 100K	1	
R737,38		ERJ6GEYJ122	M.RESISTOR CH 1/10W 1.2K	2	
R739		VRE0034E362	M.RESISTOR CH 1/10W 3.6K	1	
R740		ERJ6GEYJ122	M.RESISTOR CH 1/10W 1.2K	1	
R741,42		ERJ6GEYJ103	M.RESISTOR CH 1/10W 10K	2	
R743-45		ERJ6GEYJ473	M.RESISTOR CH 1/10W 47K	3	
R801		ERJ6GEYJ104	M.RESISTOR CH 1/10W 100K	1	
R802,03		ERJ6GEYJ332	M.RESISTOR CH 1/10W 3.3K	2	
R804		ERJ6GEYJ102	M.RESISTOR CH 1/10W 1K	1	
R805		ERJ6GEYJ272	M.RESISTOR CH 1/10W 2.7K	1	
R806		ERJ6GEYJ102	M.RESISTOR CH 1/10W 1K	1	
R807		ERJ6GEYJ104	M.RESISTOR CH 1/10W 100K	1	
R809		ERJ6GEYJ472	M.RESISTOR CH 1/10W 4.7K	1	
R810		ERJ6GEYJ682	M.RESISTOR CH 1/10W 6.8K	1	
R828,29		ERJ6GEYJ821	M.RESISTOR CH 1/10W 820	2	
R830		ERJ6GEYJ681	M.RESISTOR CH 1/10W 680	1	
R831		ERJ6GEY0R00	M.RESISTOR CH 1/10W 0	1	
R832		ERJ6GEYG112	M.RESISTOR CH 1/10W 1.1K	1	
R833		ERJ6GEYJ103	M.RESISTOR CH 1/10W 10K	1	
R834		ERJ6GEYJ183	M.RESISTOR CH 1/10W 18K	1	
R835		ERJ6GEYJ562	M.RESISTOR CH 1/10W 5.6K	1	
R836		ERJ6GEYJ104	M.RESISTOR CH 1/10W 100K	1	
R837,38		ERJ6GEYJ122	M.RESISTOR CH 1/10W 1.2K	2	
R839		VRE0034E362	M.RESISTOR CH 1/10W 3.6K	1	
R840		ERJ6GEYJ122	M.RESISTOR CH 1/10W 1.2K	1	
R841,42		ERJ6GEYJ103	M.RESISTOR CH 1/10W 10K	2	
R843,44		ERJ6GEYJ473	M.RESISTOR CH 1/10W 47K	2	
R845		ERJ6GEYJ273	M.RESISTOR CH 1/10W 27K	1	
R914		ERJ6GEYJ104	M.RESISTOR CH 1/10W 100K	1	
R917,18		ERJ6GEYJ561	M.RESISTOR CH 1/10W 560	2	
R919,20		ERJ6GEYJ222	M.RESISTOR CH 1/10W 2.2K	2	
R921		VRE0034E223	M.RESISTOR CH 1/10W 22K	1	
R922,23		ERJ6GEYJ104	M.RESISTOR CH 1/10W 100K	2	
R924		ERJ6GEYJ393	M.RESISTOR CH 1/10W 39K	1	
R925		ERJ6GEYJ123	M.RESISTOR CH 1/10W 12K	1	
R926		ERJ6GEYJ334	M.RESISTOR CH 1/10W 330K	1	
R927		ERJ6GEYJ103	M.RESISTOR CH 1/10W 10K	1	
R928		ERJ6GEYJ104	M.RESISTOR CH 1/10W 100K	1	
R939		ERJ6GEYJ102	M.RESISTOR CH 1/10W 1K	1	
R940		ERJ6GEYJ560	M.RESISTOR CH 1/10W 56	1	
R941		ERJ6GEYJ392	M.RESISTOR CH 1/10W 3.9K	1	
R942		ERJ6GEYJ102	M.RESISTOR CH 1/10W 1K	1	
R943		ERJ6GEYJ222	M.RESISTOR CH 1/10W 2.2K	1	
R944		ERJ6GEYJ823	M.RESISTOR CH 1/10W 82K	1	
R945		ERJ6GEYJ273	M.RESISTOR CH 1/10W 27K	1	
R946-48		ERJ6GEYJ102	M.RESISTOR CH 1/10W 1K	3	
R949		ERJ6GEYJ390	M.RESISTOR CH 1/10W 39	1	
R950		ERJ6GEYJ392	M.RESISTOR CH 1/10W 3.9K	1	
R951		ERJ6GEYJ102	M.RESISTOR CH 1/10W 1K	1	
R952		ERJ6GEYJ222	M.RESISTOR CH 1/10W 2.2K	1	
R953		ERJ6GEYJ823	M.RESISTOR CH 1/10W 82K	1	
R954		ERJ6GEYJ273	M.RESISTOR CH 1/10W 27K	1	
R955,56		ERJ6GEYJ102	M.RESISTOR CH 1/10W 1K	2	
R957		ERJ6GEYJ222	M.RESISTOR CH 1/10W 2.2K	1	
R958		ERJ6GEYJ823	M.RESISTOR CH 1/10W 82K	1	
R959		ERJ6GEYJ273	M.RESISTOR CH 1/10W 27K	1	
R960		ERJ6GEYJ101	M.RESISTOR CH 1/10W 100	1	
R961		ERJ6GEYJ103	M.RESISTOR CH 1/10W 10K	1	
R963		ERJ6GEYJ560	M.RESISTOR CH 1/10W 56	1	

Ref.No.		Part No.	Part Name & Description	Pcs	Remarks
SW101		VSS023703	SWITCH	1	
SW301		VSS023703	SWITCH	1	
TP1		VJR0646	TEST POINT	1	
TP101		VJR0646	TEST POINT	1	
TP301		VJR0646	TEST POINT	1	
TP501		VJR0646	TEST POINT	1	
TP702-04		VJR0646	TEST POINT	3	
TP802-04		VJR0646	TEST POINT	3	
TP901-03		VJR0646	TEST POINT	3	
TPG101		VJR0646	TEST POINT	1	
TPG301		VJR0646	TEST POINT	1	
TPG901		VJR0646	TEST POINT	1	
VR103		VRV0109B502	V.RESISTOR 5K	1	
VR303		VRV0109B502	V.RESISTOR 5K	1	
VR703		VRV0109B203	V.RESISTOR 20K	1	
VR704		VRV0109B303	V.RESISTOR 30K	1	
VR705		VRV0109B203	V.RESISTOR 20K	1	
VR803-05		VRV0109B203	V.RESISTOR 20K	3	
			MISCELLANEOUS		
		VML2143	CARD PULLER	1	
		VML2144	CARD PULLER	1	
		VMZ1547	BARRIER	1	
		VXA3966	P.C.B. SHIELD PLATE	1	
		XYNV3+K6FR	SCREW	5	

Ref.No.		Part No.	Part Name & Description	Pcs	Remarks
	■	VEP80549H	P.C.BOARD W/COMPONENT		FOR AU-65H
			BO MOTHER 2		
B1L		VJS2899A096	CONNECTOR (FEMALE)	1	
B2L		VJS2899A096	CONNECTOR (FEMALE)	1	
B1R		VJS2899A096	CONNECTOR (FEMALE)	1	
			CAPACITORS		
C1		ECEA0JU221	E.CAPACITOR 6.3V 220U	1	
C2		ECQB1H473JF	P.CAPACITOR 50V 0.047U	1	
CN50		VJP2893A064	CONNECTOR(MALE)	1	
CN51		VJP1247T	CONNECTOR(MALE) 7P	1	
CN52		VJP1233T	CONNECTOR(MALE) 6P	1	
CN53		VJP2856A026	CONNECTOR(MALE)	1	
CN54		VJP3093	CONNECTOR	1	
CN55		VJP3082	CONNECTOR (MALE)	1	
CN56		VJP3094	CONNECTOR (MALE)	1	
CN57		VJP3081	CONNECTOR	1	
CN58		VJP1248T	CONNECTOR(MALE) 8P	1	
CN59		VJP3095	CONNECTOR (MALE)	1	
CN61		VJP1244T	CONNECTOR(MALE) 4P	1	
CN311		VJP1243T	CONNECTOR(MALE) 3P	1	
CN610		VJP1243T	CONNECTOR(MALE) 3P	1	
P10		VJP1709	CONNECTOR(MALE)	1	
			MISCELLANEOUS		
		VMP2599	P.C.B. HOLDER ANGLE	1	
		XNG26E	NUT	6	
		XTV3+6F	SCREW	5	
		XYN26+C8	SCREW	6	
	■	VEP80549K	P.C.BOARD W/COMPONENT		FOR AU-63H
			BO MOTHER 2		
B1L		VJS2899A096	CONNECTOR (FEMALE)	1	
B2L		VJS2899A096	CONNECTOR (FEMALE)	1	
B1R		VJS2899A096	CONNECTOR (FEMALE)	1	
			CAPACITORS		
C1		ECEA0JU221	E.CAPACITOR 6.3V 220U	1	
C2		ECQB1H473JF	P.CAPACITOR 50V 0.047U	1	
CN50		VJP2893A064	CONNECTOR(MALE)	1	
CN51		VJP1247T	CONNECTOR(MALE) 7P	1	
CN52		VJP1233T	CONNECTOR(MALE) 6P	1	
CN53		VJP2856A026	CONNECTOR(MALE)	1	
CN54		VJP3093	CONNECTOR	1	
CN55		VJP3082	CONNECTOR (MALE)	1	
CN56		VJP3094	CONNECTOR (MALE)	1	
CN57		VJP3081	CONNECTOR	1	
CN58		VJP1248T	CONNECTOR(MALE) 8P	1	
CN59		VJP3095	CONNECTOR (MALE)	1	
CN61		VJP1244T	CONNECTOR(MALE) 4P	1	
CN311		VJP1243T	CONNECTOR(MALE) 3P	1	
CN610		VJP1243T	CONNECTOR(MALE) 3P	1	
P10		VJP1709	CONNECTOR(MALE)	1	
			MISCELLANEOUS		
		VMP2599	P.C.B. HOLDER ANGLE	1	
		XNG26E	NUT	6	
		XTV3+6F	SCREW	5	
		XYN26+C8	SCREW	6	
	■	VEP80549J	P.C.BOARD W/COMPONENT		FOR AU-62H
			BO MOTHER 2		
B1L		VJS2899A096	CONNECTOR (FEMALE)	1	
B2L		VJS2899A096	CONNECTOR (FEMALE)	1	
B1R		VJS2899A096	CONNECTOR (FEMALE)	1	
			CAPACITORS		
C1		ECEA0JU221	E.CAPACITOR 6.3V 220U	1	
C2		ECQB1H473JF	P.CAPACITOR 50V 0.047U	1	
CN50		VJP2893A064	CONNECTOR(MALE)	1	
CN51		VJP1247T	CONNECTOR(MALE) 7P	1	
CN52		VJP1233T	CONNECTOR(MALE) 6P	1	
CN53		VJP2856A026	CONNECTOR(MALE)	1	
CN54		VJP3093	CONNECTOR	1	
CN55		VJP3082	CONNECTOR (MALE)	1	
CN56		VJP3094	CONNECTOR (MALE)	1	
CN57		VJP3081	CONNECTOR	1	
CN58		VJP1248T	CONNECTOR(MALE) 8P	1	
CN59		VJP3095	CONNECTOR (MALE)	1	
CN61		VJP1244T	CONNECTOR(MALE) 4P	1	
CN311		VJP1243T	CONNECTOR(MALE) 3P	1	
CN610		VJP1243T	CONNECTOR(MALE) 3P	1	
P10		VJP1709	CONNECTOR(MALE)	1	
			MISCELLANEOUS		
		VMP2599	P.C.B.HOLDER ANGLE	1	
		XNG26E	NUT	6	
		XTV3+6F	SCREW	5	
		XYN26+C8	SCREW	6	
	■	VEP86121D	P.C.BOARD W/COMPONENT		FOR AU-65H
			B1 SYSTEM CONTROL		

Ref.No.		Part No.	Part Name & Description	Pcs	Remarks
B1L		VJP2899B096	CONNECTOR(MALE)	1	
B1R		VJP2899B096	CONNECTOR(MALE)	1	
			CAPACITORS		
C1,C2		ECUM1H331JCN	C.CAPACITOR CH 50V 330P	2	
C3-C5		ECUM1H102JCN	C.CAPACITOR CH 50V 1000P	3	
C6-C9		ECUM1H103ZFN	C.CAPACITOR CH 50V 0.01U	4	
C10		ECEA0JU221	E.CAPACITOR 6.3V 220U	1	
C11		ECEA0JU101	E.CAPACITOR 6.3V 100U	1	
C12,13		ECUM1E104ZFN	C.CAPACITOR CH 25V 0.1U	2	
C14,15		ECUM1H270JCN	C.CAPACITOR CH 50V 27P	2	
C16-18		ECUM1H103ZFN	C.CAPACITOR CH 50V 0.01U	3	
C19		ECEA1HU3R3	E.CAPACITOR 50V 3.3U	1	
C20		ECQM1H104JF	P.CAPACITOR 50V 0.1U	1	
C21-23		ECUM1H103ZFN	C.CAPACITOR CH 50V 0.01U	3	
C25		ECEA0JU471	E.CAPACITOR 6.3V 470U	1	
C26,27		ECUM1H680JCN	C.CAPACITOR CH 50V 68P	2	
C28-33		ECUM1H103ZFN	C.CAPACITOR CH 50V 0.01U	6	
C34		ECUM1E104ZFN	C.CAPACITOR CH 25V 0.1U	1	
C35,36		ECUM1H103ZFN	C.CAPACITOR CH 50V 0.01U	2	
C37		ECEA1CU100	E.CAPACITOR 16V 10U	1	
C38-41		ECUM1E104ZFN	C.CAPACITOR CH 25V 0.1U	4	
C42-47		ECUM1H103ZFN	C.CAPACITOR CH 50V 0.01U	6	
C50		ECUM1H103ZFN	C.CAPACITOR CH 50V 0.01U	1	
C51		ECEA1CU100	E.CAPACITOR 16V 10U	1	
C52		ECUM1E104ZFN	C.CAPACITOR CH 25V 0.1U	1	
C53		ECUM1H103ZFN	C.CAPACITOR CH 50V 0.01U	1	
C75-82		ECUM1H103ZFN	C.CAPACITOR CH 50V 0.01U	8	
C83,84		ECEA1HU010	E.CAPACITOR 50V 1U	2	
C85		ECEA1CN100S	E.CAPACITOR 16V 10U	1	
C86		ECUM1H101JCN	C.CAPACITOR CH 50V 100P	1	
C87		ECUM1H103ZFN	C.CAPACITOR CH 50V 0.01U	1	
C88		ECEA1CN100S	E.CAPACITOR 16V 10U	1	
C89		ECUM1H101JCN	C.CAPACITOR CH 50V 100P	1	
C90		ECUM1H103ZFN	C.CAPACITOR CH 50V 0.01U	1	
C91		ECEA1HU010	E.CAPACITOR 50V 1U	1	
C92		ECUM1H103ZFN	C.CAPACITOR CH 50V 0.01U	1	
C94		ECEA1HU010	E.CAPACITOR 50V 1U	1	
C95		ECUM1H103ZFN	C.CAPACITOR CH 50V 0.01U	1	
C96-99		ECUM1E104ZFN	C.CAPACITOR CH 25V 0.1U	4	
C100,01		ECUM1E104ZFN	C.CAPACITOR CH 25V 0.1U	2	
C102-06		ECUM1H103ZFN	C.CAPACITOR CH 50V 0.01U	5	
C107		ECUM1E104ZFN	C.CAPACITOR CH 25V 0.1U	1	
C108-14		ECUM1H103ZFN	C.CAPACITOR CH 50V 0.01U	7	
C115		ECUM1E104ZFN	C.CAPACITOR CH 25V 0.1U	1	
C116-19		ECUM1H103ZFN	C.CAPACITOR CH 50V 0.01U	4	
C120		ECEA1HU010	E.CAPACITOR 50V 1U	1	
C121-23		ECUM1H103ZFN	C.CAPACITOR CH 50V 0.01U	3	
C124		ECUM1H150JCN	C.CAPACITOR CH 50V 15P	1	
C125		ECUM1H270JCN	C.CAPACITOR CH 50V 27P	1	
C127-38		ECUM1H103ZFN	C.CAPACITOR CH 50V 0.01U	12	
C140		ECUM1H103ZFN	C.CAPACITOR CH 50V 0.01U	1	
C141		ECEA1HU2R2	E.CAPACITOR 50V 2.2U	1	
C142		ECQM1H154JF	P.CAPACITOR 50V 0.15U	1	
C143		ECQM1H104JF	P.CAPACITOR 50V 0.1U	1	
C147,48		ECUM1H103ZFN	C.CAPACITOR CH 50V 0.01U	2	
C151		ECUM1E104ZFN	C.CAPACITOR CH 25V 0.1U	1	
C154		ECUM1H102JCN	C.CAPACITOR CH 50V 1000P	1	
C500-02		ECEA1EU4R7	E.CAPACITOR 25V 4.7U	3	
C503-05		ECEA1HN2R2S	E.CAPACITOR 50V 2.2U	3	
C506-08		ECEA1EU101	E.CAPACITOR 25V 100U	3	
D1		MA151WA	DIODE	1	
D2		MA153	DIODE	1	
D3		MA151K	DIODE	1	
D4,D5		MA151WA	DIODE	2	
D6-D9		MA151K	DIODE	4	
D10-13		MA151K	DIODE	4	

Ref.No.		Part No.	Part Name & Description	Pcs	Remarks
D15		MA151K	DIODE	1	
D16		MA151WK	DIODE	1	
D17		MA151WA	DIODE	1	
D18,19		MA151K	DIODE	2	
D20		MA151WK	DIODE	1	
D500		MA151K	DIODE	1	
D501-06		10E1	DIODE	6	
D507,08		MA151K	DIODE	2	
D509		10E1	DIODE	1	
D510		MA151WK	DIODE	1	
D511		MA3039-H	DIODE	1	
D512		MA3075H	DIODE	1	
D513		MA3051-H	DIODE	1	
D514		MA3056-H	DIODE	1	
D515		MA3100-M	DIODE	1	
IC1		MC14024BF	IC	1	
IC2		MC34051M	IC	1	
IC3		TMPZ84C43AF6	IC	1	
IC4		UPD71054GB	IC	1	
IC5		HD641802F8	IC	1	
IC6		TL7705CPSB	IC	1	
IC7		VSI1119	IC	1	
IC8,C9		MC74HC541F	IC	2	
IC10		MBM221220	IC	1	
IC11		VSI0234	IC	1	
IC13		MC74HC4538F	IC	1	
IC14		MC74HC541F	IC	1	
IC15		MC74HC245AF	IC	1	
IC16,17		MC74HC138AF	IC	2	
IC18		MB89363BPF	IC	1	
IC19,20		MC14094BF	IC	2	
IC21		MB89363BPF	IC	1	
IC24		MC14013BF	IC	1	
IC25,26		MC14027BF	IC	2	
IC27-29		MC14538BF	IC	3	
IC30		MB621176PF	IC	1	
IC31		MB89363BPF	IC	1	
IC32,33		MC14021BF	IC	2	
IC34		MC14094BF	IC	1	
IC35		MB89363BPF	IC	1	
IC36-41		MC14021BF	IC	6	
IC42		MB89363BPF	IC	1	
IC43,44		MC14094BF	IC	2	
IC45		MC14021BF	IC	1	
IC46		M50455-001SP	IC	1	
IC47,48		MC14C50BF	IC	2	
IC49		SN74LS38NS	IC	1	
IC50,51		MC74HC132AF	IC	2	
IC52		MC74HC04AF	IC	1	
IC53,54		MC14049UBF	IC	2	
IC55		MC74HC00AF	IC	1	
IC56		M74F32FP	IC	1	
IC57		MN4030BS	IC	1	
IC58		MC74HC541F	IC	1	
IC59		LM2903M	IC	1	
IC60,61		NJM2901M	IC	2	
IC62		MC74HC00AF	IC	1	
IC63		MC74HC138AF	IC	1	
IC64,65		MC14021BF	IC	2	
IC66,67		MC14094BF	IC	2	
IC68		MB89363BPF	IC	1	
IC69		TC74HC190AF	IC	1	
IC71		MC14538BF	IC	1	
IC72		MC74HC86F	IC	1	
IC75		MN4030BS	IC	1	
IC500		PU3124	IC	1	
IC501		PU4124	IC	1	
IC502,03		BA6238AU2M	IC	2	
IC7S		VJS2336A032	CONNECTOR (FEMALE)	1	
IC10S		VJS2336A018	CONNECTOR (FEMALE)	1	

Ref.No.		Part No.	Part Name & Description	Pcs	Remarks
L1		VLP0017	COIL	1	
L2		VLQEL05S150J	COIL 15UH	1	
Q1		2SB710	TRANSISTOR	1	(Q,R)
Q2		DTC144EK	TRANSISTOR-RESISTOR	1	
Q3,Q4		DTC114YK	TRANSISTOR-RESISTOR	2	
Q5		UN2214	TRANSISTOR-RESISTOR	1	
Q7-Q9		DTC144EK	TRANSISTOR-RESISTOR	3	
Q9		UN2214	TRANSISTOR-RESISTOR	1	
Q10-13		DTC144EK	TRANSISTOR-RESISTOR	4	
Q15		2SB710	TRANSISTOR	1	(Q,R)
Q16		2SD602	TRANSISTOR	1	(Q,R)
Q17-22		DTC144EK	TRANSISTOR-RESISTOR	6	
Q25-47		DTC144EK	TRANSISTOR-RESISTOR	23	
Q48		2SD946A	TRANSISTOR	1	
Q49		DTC144EK	TRANSISTOR-RESISTOR	1	
Q500,01		UN2213	TRANSISTOR-RESISTOR	2	
Q502,03		2SB709-R	TRANSISTOR CHIP	2	(Q,R)
Q504		UN2213	TRANSISTOR-RESISTOR	1	
Q505,06		2SB709-R	TRANSISTOR CHIP	2	(Q,R)
Q507		UN2213	TRANSISTOR-RESISTOR	1	
Q508,09		2SB709-R	TRANSISTOR CHIP	2	(Q,R)
Q510-14		UN2213	TRANSISTOR-RESISTOR	5	
Q515		2SB709-R	TRANSISTOR CHIP	1	(Q,R)
			RESISTORS		
R1		ERJ6GEYG223	M.RESISTOR CH 1/10W 22K	1	
R2		ERJ6GEY0R00	M.RESISTOR CH 1/10W 0	1	
R3		ERJ6GEYG223	M.RESISTOR CH 1/10W 22K	1	
R4		ERJ6GEY0R00	M.RESISTOR CH 1/10W 0	1	
R5		ERJ6GEYJ562	M.RESISTOR CH 1/10W 5.6K	1	
R6		ERJ6GEYJ103	M.RESISTOR CH 1/10W 10K	1	
R7-R9		ERJ6GEYJ681	M.RESISTOR CH 1/10W 680	3	
R10		ERJ6GEYJ473	M.RESISTOR CH 1/10W 47K	1	
R11		ERJ6GEYJ152	M.RESISTOR CH 1/10W 1.5K	1	
R12		ERJ6GEYJ101	M.RESISTOR CH 1/10W 100	1	
R13,14		ERJ6GEYJ152	M.RESISTOR CH 1/10W 1.5K	2	
R15		ERJ6GEYJ101	M.RESISTOR CH 1/10W 100	1	
R16		ERJ6GEYJ152	M.RESISTOR CH 1/10W 1.5K	1	
R17		ERJ6GEYJ473	M.RESISTOR CH 1/10W 47K	1	
R18		ERJ6GEYJ472	M.RESISTOR CH 1/10W 4.7K	1	
R19-22		ERJ6GEYJ473	M.RESISTOR CH 1/10W 47K	4	
R23-31		ERJ6GEYJ103	M.RESISTOR CH 1/10W 10K	9	
R32		ERJ6GEYJ472	M.RESISTOR CH 1/10W 4.7K	1	
R33		ERJ6GEYJ102	M.RESISTOR CH 1/10W 1K	1	
R34		ERJ6GEYJ103	M.RESISTOR CH 1/10W 10K	1	
R35		ERJ6GEYJ473	M.RESISTOR CH 1/10W 47K	1	
R36		ERJ6GEYJ103	M.RESISTOR CH 1/10W 10K	1	
R37-47		ERJ6GEYJ473	M.RESISTOR CH 1/10W 47K	11	
R48		ERJ6GEYJ474	M.RESISTOR CH 1/10W 470K	1	
R49		ERJ6GEYJ103	M.RESISTOR CH 1/10W 10K	1	
R50		ERJ6GEYG223	M.RESISTOR CH 1/10W 22K	1	
R51,52		ERJ6GEYJ473	M.RESISTOR CH 1/10W 47K	2	
R53		ERJ6GEYG223	M.RESISTOR CH 1/10W 22K	1	
R54-72		ERJ6GEYJ103	M.RESISTOR CH 1/10W 10K	19	
R73-77		ERJ6GEYJ473	M.RESISTOR CH 1/10W 47K	5	
R79		ERJ6GEYJ473	M.RESISTOR CH 1/10W 47K	1	
R81-85		ERJ6GEYJ473	M.RESISTOR CH 1/10W 47K	5	
R86,87		ERJ6GEYG223	M.RESISTOR CH 1/10W 22K	2	
R88		ERJ6GEYJ473	M.RESISTOR CH 1/10W 47K	1	
R93-96		ERJ6GEYJ473	M.RESISTOR CH 1/10W 47K	4	
R97		ERJ6GEYJ101	M.RESISTOR CH 1/10W 100	1	
R100		ERJ6GEYJ101	M.RESISTOR CH 1/10W 100	1	
R101		ERJ6GEYJ473	M.RESISTOR CH 1/10W 47K	1	
R102,03		ERJ6GEYJ101	M.RESISTOR CH 1/10W 100	2	
R104		ERJ6GEYG223	M.RESISTOR CH 1/10W 22K	1	
R105		ERJ6GEYJ103	M.RESISTOR CH 1/10W 10K	1	
R106		ERJ6GEYJ474	M.RESISTOR CH 1/10W 470K	1	
R107-22		ERJ6GEYJ103	M.RESISTOR CH 1/10W 10K	16	
R123-25		ERJ6GEYJ101	M.RESISTOR CH 1/10W 100	3	
R126,27		ERJ6GEYJ562	M.RESISTOR CH 1/10W 5.6K	2	
R128		ERJ6GEYJ472	M.RESISTOR CH 1/10W 4.7K	1	
R129		ERJ6GEYG223	M.RESISTOR CH 1/10W 22K	1	
R130-32		ERJ6GEYJ473	M.RESISTOR CH 1/10W 47K	3	
R133,34		ERJ6GEYJ562	M.RESISTOR CH 1/10W 5.6K	2	
R136		ERJ6GEYG223	M.RESISTOR CH 1/10W 22K	1	
R137-43		ERJ6GEYJ473	M.RESISTOR CH 1/10W 47K	7	
R144		ERJ6GEYJ332	M.RESISTOR CH 1/10W 3.3K	1	
R145		ERJ6GEYJ101	M.RESISTOR CH 1/10W 100	1	
R146		ERJ6GEYG223	M.RESISTOR CH 1/10W 22K	1	
R147		ERJ6GEYJ332	M.RESISTOR CH 1/10W 3.3K	1	
R148		ERJ6GEYJ101	M.RESISTOR CH 1/10W 100	1	
R149		ERJ6GEYJ102	M.RESISTOR CH 1/10W 1K	1	
R150		ERJ6GEYJ332	M.RESISTOR CH 1/10W 3.3K	1	
R151		ERJ6GEYJ101	M.RESISTOR CH 1/10W 100	1	
R152		ERJ6GEYG223	M.RESISTOR CH 1/10W 22K	1	
R153		ERJ6GEYJ332	M.RESISTOR CH 1/10W 3.3K	1	
R154		ERJ6GEYJ101	M.RESISTOR CH 1/10W 100	1	
R155		ERJ6GEYJ102	M.RESISTOR CH 1/10W 1K	1	
R156,57		ERJ6GEYJ104	M.RESISTOR CH 1/10W 100K	2	
R158		ERJ6GEYJ332	M.RESISTOR CH 1/10W 3.3K	1	
R159		ERJ6GEYJ103	M.RESISTOR CH 1/10W 10K	1	
R160,61		ERJ6GEYJ102	M.RESISTOR CH 1/10W 1K	2	
R162		ERJ6GEYJ332	M.RESISTOR CH 1/10W 3.3K	1	
R163		ERJ6GEYJ103	M.RESISTOR CH 1/10W 10K	1	
R164		ERJ6GEYJ105	M.RESISTOR CH 1/10W 1M	1	
R165		ERJ6GEYG223	M.RESISTOR CH 1/10W 22K	1	
R166		ERJ6GEYJ105	M.RESISTOR CH 1/10W 1M	1	
R167		ERJ6GEYG223	M.RESISTOR CH 1/10W 22K	1	
R168,69		ERJ6GEYJ103	M.RESISTOR CH 1/10W 10K	2	
R170		ERJ6GEYJ104	M.RESISTOR CH 1/10W 100K	1	
R171		VRE0034E623	M.RESISTOR CH 1/10W 62K	1	
R172		ERJ6GEYJ104	M.RESISTOR CH 1/10W 100K	1	
R173-83		ERJ6GEYJ103	M.RESISTOR CH 1/10W 10K	11	
R184-86		ERJ6GEYJ473	M.RESISTOR CH 1/10W 47K	3	
R187-91		ERJ6GEYJ103	M.RESISTOR CH 1/10W 10K	5	
R192,93		ERJ6GEYJ101	M.RESISTOR CH 1/10W 100	2	
R194-01		ERJ6GEYJ103	M.RESISTOR CH 1/10W 10K	8	
R202		ERJ6GEYJ473	M.RESISTOR CH 1/10W 47K	1	
R203-06		ERJ6GEYJ103	M.RESISTOR CH 1/10W 10K	4	
R207,08		ERJ6GEYG223	M.RESISTOR CH 1/10W 22K	2	
R209,10		ERJ6GEYJ122	M.RESISTOR CH 1/10W 1.2K	2	
R211		ERJ6GEYJ101	M.RESISTOR CH 1/10W 100	1	
R212		ERJ6GEYJ474	M.RESISTOR CH 1/10W 470K	1	
R213		ERJ6GEYJ103	M.RESISTOR CH 1/10W 10K	1	
R214		ERJ6GEYG223	M.RESISTOR CH 1/10W 22K	1	
R215		ERJ6GEYJ473	M.RESISTOR CH 1/10W 47K	1	
R216,17		ERJ6GEYG223	M.RESISTOR CH 1/10W 22K	2	
R218,19		ERJ6GEYJ101	M.RESISTOR CH 1/10W 100	2	
R220		ERJ6GEYG223	M.RESISTOR CH 1/10W 22K	1	
R221		ERJ6GEYJ101	M.RESISTOR CH 1/10W 100	1	
R222		ERJ6GEYJ474	M.RESISTOR CH 1/10W 470K	1	
R223		ERJ6GEYJ103	M.RESISTOR CH 1/10W 10K	1	
R224		ERJ6GEYG223	M.RESISTOR CH 1/10W 22K	1	
R225		ERJ6GEYJ102	M.RESISTOR CH 1/10W 1K	1	
R226		ERJ6GEYJ473	M.RESISTOR CH 1/10W 47K	1	
R227		ERJ6GEYJ103	M.RESISTOR CH 1/10W 10K	1	
R228		ERJ6GEYG223	M.RESISTOR CH 1/10W 22K	1	
R229		ERJ6GEYJ473	M.RESISTOR CH 1/10W 47K	1	
R230		ERJ6GEYJ103	M.RESISTOR CH 1/10W 10K	1	
R231		ERJ6GEYJ101	M.RESISTOR CH 1/10W 100	1	
R232		ERJ6GEYG223	M.RESISTOR CH 1/10W 22K	1	
R233,34		ERJ6GEYJ473	M.RESISTOR CH 1/10W 47K	2	
R235		ERJ6GEYG223	M.RESISTOR CH 1/10W 22K	1	
R236-39		ERJ6GEYJ473	M.RESISTOR CH 1/10W 47K	4	
R240		ERJ6GEYJ103	M.RESISTOR CH 1/10W 10K	1	
R241-45		ERJ6GEYJ473	M.RESISTOR CH 1/10W 47K	5	
R247		ERJ6GEYJ103	M.RESISTOR CH 1/10W 10K	1	
R248,49		ERJ6GEYJ102	M.RESISTOR CH 1/10W 1K	2	
R250		ERJ6GEYG223	M.RESISTOR CH 1/10W 22K	1	
R251		ERJ6GEYJ123	M.RESISTOR CH 1/10W 12K	1	
R252		ERJ6GEYJ103	M.RESISTOR CH 1/10W 10K	1	
R253		ERJ6GEYJ393	M.RESISTOR CH 1/10W 39K	1	
R254		ERJ6GEYG223	M.RESISTOR CH 1/10W 22K	1	
R255		ERJ6GEYJ562	M.RESISTOR CH 1/10W 5.6K	1	

Ref.No.		Part No.	Part Name & Description	Pcs	Remarks
R256		ERJ6GEYG223	M.RESISTOR CH 1/10W 22K	1	
R257		ERJ6GEYJ473	M.RESISTOR CH 1/10W 47K	1	
R258		ERJ6GEYJ103	M.RESISTOR CH 1/10W 10K	1	
R259,60		ERJ6GEYG223	M.RESISTOR CH 1/10W 22K	2	
R261		ERJ6GEYJ183	M.RESISTOR CH 1/10W 18K	1	
R262		ERJ6GEYJ103	M.RESISTOR CH 1/10W 10K	1	
R263		ERJ6GEYJ333	M.RESISTOR CH 1/10W 33K	1	
R264,65		ERJ6GEYJ473	M.RESISTOR CH 1/10W 47K	2	
R266,67		ERJ6GEYJ101	M.RESISTOR CH 1/10W 100	2	
R269		ERJ6GEYJ103	M.RESISTOR CH 1/10W 10K	1	
R270		ERJ6GEYJ101	M.RESISTOR CH 1/10W 100	1	
R272-77		ERJ6GEYJ103	M.RESISTOR CH 1/10W 10K	6	
R278-85		ERJ6GEYJ473	M.RESISTOR CH 1/10W 47K	8	
R286		ERJ6GEYJ103	M.RESISTOR CH 1/10W 10K	1	
R287		ERJ6GEYG223	M.RESISTOR CH 1/10W 22K	1	
R288,89		ERJ6GEYJ103	M.RESISTOR CH 1/10W 10K	2	
R290		ERJ6GEYJ473	M.RESISTOR CH 1/10W 47K	1	
R294		ERJ6GEYJ103	M.RESISTOR CH 1/10W 10K	1	
R295		ERJ6GEYJ564	M.RESISTOR CH 1/10W 560K	1	
R296		ERJ6GEYJ473	M.RESISTOR CH 1/10W 47K	1	
R301		ERJ6GEYG563	M.RESISTOR CH 1/10W 56K	1	
R302,03		ERJ6GEYJ333	M.RESISTOR CH 1/10W 33K	2	
R304		ERJ6GEYJ473	M.RESISTOR CH 1/10W 47K	1	
R502		ERJ6GEYJ122	M.RESISTOR CH 1/10W 1.2K	1	
R504		ERJ6GEYJ222	M.RESISTOR CH 1/10W 2.2K	1	
R505		ERJ6GEYG223	M.RESISTOR CH 1/10W 22K	1	
R506		ERJ6GEYJ103	M.RESISTOR CH 1/10W 10K	1	
R507		ERJ6GEYJ102	M.RESISTOR CH 1/10W 1K	1	
R508		ERJ6GEYJ104	M.RESISTOR CH 1/10W 100K	1	
R509		ERJ6GEYJ103	M.RESISTOR CH 1/10W 10K	1	
R510		ERJ6GEYG223	M.RESISTOR CH 1/10W 22K	1	
R511		ERJ6GEYJ102	M.RESISTOR CH 1/10W 1K	1	
R512		ERJ6GEYJ104	M.RESISTOR CH 1/10W 100K	1	
R513		ERJ6GEYJ222	M.RESISTOR CH 1/10W 2.2K	1	
R514		ERJ6GEYG223	M.RESISTOR CH 1/10W 22K	1	
R515		ERJ6GEYJ103	M.RESISTOR CH 1/10W 10K	1	
R516		ERJ6GEYJ102	M.RESISTOR CH 1/10W 1K	1	
R517		ERJ6GEYJ104	M.RESISTOR CH 1/10W 100K	1	
R518		ERJ6GEYG223	M.RESISTOR CH 1/10W 22K	1	
R519		ERJ6GEYJ103	M.RESISTOR CH 1/10W 10K	1	
R520		ERJ6GEYJ102	M.RESISTOR CH 1/10W 1K	1	
R521		ERJ6GEYJ104	M.RESISTOR CH 1/10W 100K	1	
R522		ERJ6GEYJ222	M.RESISTOR CH 1/10W 2.2K	1	
R523		ERJ6GEYG223	M.RESISTOR CH 1/10W 22K	1	
R524		ERJ6GEYJ103	M.RESISTOR CH 1/10W 10K	1	
R525		ERJ6GEYJ102	M.RESISTOR CH 1/10W 1K	1	
R526		ERJ6GEYJ104	M.RESISTOR CH 1/10W 100K	1	
R527		ERJ6GEYG223	M.RESISTOR CH 1/10W 22K	1	
R528		ERJ6GEYJ103	M.RESISTOR CH 1/10W 10K	1	
R529		ERJ6GEYJ102	M.RESISTOR CH 1/10W 1K	1	
R530		ERJ6GEYJ104	M.RESISTOR CH 1/10W 100K	1	
R531,32		ERX1SJ1R0	M.RESISTOR 1W 1.0	2	
R533		ERJ6GEYJ104	M.RESISTOR CH 1/10W 100K	1	
R536		ERJ6GEYJ562	M.RESISTOR CH 1/10W 5.6K	1	
R537		ERJ6GEYJ222	M.RESISTOR CH 1/10W 2.2K	1	
R538		ERJ6GEYJ103	M.RESISTOR CH 1/10W 10K	1	
R539		ERJ6GEYG223	M.RESISTOR CH 1/10W 22K	1	
R540		ERJ6GEYJ102	M.RESISTOR CH 1/10W 1K	1	
R541		ERJ6GEYJ104	M.RESISTOR CH 1/10W 100K	1	
R542		ERJ6GEYJ272	M.RESISTOR CH 1/10W 2.7K	1	
R543		ERJ6GEYJ271	M.RESISTOR CH 1/10W 270	1	
SW1,W2		VSS0223	SWITCH	2	
SW3		VSR0045	SWITCH	1	
SW4-W6		EVQQEJ06K	SWITCH	3	
SW7		VST0096	SWITCH	1	
TP17-19		VJR0646	TEST POINT	3	
TPG1,G2		VJR0646	TEST POINT	2	

Ref.No.		Part No.	Part Name & Description	Pcs	Remarks
VC1		ECV1ZW20X60	V.CAPACITOR 20P	1	
X1		VSX0373	CRYSTAL OSCILLATOR	1	
			MISCELLANEOUS		
		VGH0520	SLIDE SW SHEET	2	
		VML2143	CARD PULLER	1	
		VML2144	CARD PULLER	1	
		VMZ1548	BARRIER	1	
		VSC3058	SHIELD CASE	1	
		VSC3059	SHIELD CASE	1	
		VXA3967	P.C.B. SHIELD PLATE	1	
		XNG26E	NUT	4	
		XNG3ES	NUT	2	
		XSN3+6S	SCREW	2	
		XYNV3+K6FR	SCREW	4	
		XYN26+C10	SCREW	4	

Ref.No.		Part No.	Part Name & Description	Pcs	Remarks
	■	VEP86121F	P.C.BOARD W/COMPONENT		FOR AU-63H
			B1 SYSTEM CONTROL		
B1L		VJP2899B096	CONNECTOR(MALE)	1	
B1R		VJP2899B096	CONNECTOR(MALE)	1	
			CAPACITORS		
C1,C2		ECUM1H331JCN	C.CAPACITOR CH 50V 330P	2	
C3-C5		ECUM1H102JCN	C.CAPACITOR CH 50V 1000P	3	
C6-C9		ECUM1H103ZFN	C.CAPACITOR CH 50V 0.01U	4	
C10		ECEA0JU221	E.CAPACITOR 6.3V 220U	1	
C11		ECEA0JU101	E.CAPACITOR 6.3V 100U	1	
C12,13		ECUM1E104ZFN	C.CAPACITOR CH 25V 0.1U	2	
C14,15		ECUM1H270JCN	C.CAPACITOR CH 50V 27P	2	
C16-18		ECUM1H103ZFN	C.CAPACITOR CH 50V 0.01U	3	
C19		ECEA1HU3R3	E.CAPACITOR 50V 3.3U	1	
C20		ECQM1H104JF	P.CAPACITOR 50V 0.1U	1	
C21-23		ECUM1H103ZFN	C.CAPACITOR CH 50V 0.01U	3	
C25		ECEA0JU471	E.CAPACITOR 6.3V 470U	1	
C26,27		ECUM1H680JCN	C.CAPACITOR CH 50V 68P	2	
C28-33		ECUM1H103ZFN	C.CAPACITOR CH 50V 0.01U	6	
C34		ECUM1E104ZFN	C.CAPACITOR CH 25V 0.1U	1	
C35,36		ECUM1H103ZFN	C.CAPACITOR CH 50V 0.01U	2	
C37		ECEA1CU100	E.CAPACITOR 16V 10U	1	
C38-41		ECUM1E104ZFN	C.CAPACITOR CH 25V 0.1U	4	
C42-47		ECUM1H103ZFN	C.CAPACITOR CH 50V 0.01U	6	
C50		ECUM1H103ZFN	C.CAPACITOR CH 50V 0.01U	1	
C51		ECEA1CU100	E.CAPACITOR 16V 10U	1	
C52		ECUM1E104ZFN	C.CAPACITOR CH 25V 0.1U	1	
C53		ECUM1H103ZFN	C.CAPACITOR CH 50V 0.01U	1	
C75-82		ECUM1H103ZFN	C.CAPACITOR CH 50V 0.01U	8	
C83,84		ECEA1HU010	E.CAPACITOR 50V 1U	2	
C85		ECEA1CN100S	E.CAPACITOR 16V 10U	1	
C86		ECUM1H101JCN	C.CAPACITOR CH 50V 100P	1	
C87		ECUM1H103ZFN	C.CAPACITOR CH 50V 0.01U	1	
C88		ECEA1CN100S	E.CAPACITOR 16V 10U	1	
C89		ECUM1H101JCN	C.CAPACITOR CH 50V 100P	1	
C90		ECUM1H103ZFN	C.CAPACITOR CH 50V 0.01U	1	
C91		ECEA1HU010	E.CAPACITOR 50V 1U	1	
C92		ECUM1H103ZFN	C.CAPACITOR CH 50V 0.01U	1	
C94		ECEA1HU010	E.CAPACITOR 50V 1U	1	
C95		ECUM1H103ZFN	C.CAPACITOR CH 50V 0.01U	1	
C96-99		ECUM1E104ZFN	C.CAPACITOR CH 25V 0.1U	4	
C100,01		ECUM1E104ZFN	C.CAPACITOR CH 25V 0.1U	2	
C105,06		ECUM1H103ZFN	C.CAPACITOR CH 50V 0.01U	2	
C107		ECUM1E104ZFN	C.CAPACITOR CH 25V 0.1U	1	
C108-14		ECUM1H103ZFN	C.CAPACITOR CH 50V 0.01U	7	
C115		ECUM1E104ZFN	C.CAPACITOR CH 25V 0.1U	1	
C116-19		ECUM1H103ZFN	C.CAPACITOR CH 50V 0.01U	4	
C120		ECEA1HU010	E.CAPACITOR 50V 1U	1	
C121-23		ECUM1H103ZFN	C.CAPACITOR CH 50V 0.01U	3	
C124		ECUM1H150JCN	C.CAPACITOR CH 50V 15P	1	
C125		ECUM1H270JCN	C.CAPACITOR CH 50V 27P	1	
C127-38		ECUM1H103ZFN	C.CAPACITOR CH 50V 0.01U	12	
C140		ECUM1H103ZFN	C.CAPACITOR CH 50V 0.01U	1	
C141		ECEA1HU2R2	E.CAPACITOR 50V 2.2U	1	
C142		ECQM1H154JF	P.CAPACITOR 50V 0.15U	1	
C143		ECQM1H104JF	P.CAPACITOR 50V 0.1U	1	
C147,48		ECUM1H103ZFN	C.CAPACITOR CH 50V 0.01U	2	
C151		ECUM1E104ZFN	C.CAPACITOR CH 25V 0.1U	1	
C154		ECUM1H102JCN	C.CAPACITOR CH 50V 1000P	1	
C500-02		ECEA1EU4R7	E.CAPACITOR 25V 4.7U	3	
C503-05		ECEA1HN2R2S	E.CAPACITOR 50V 2.2U	3	
C506-08		ECEA1EU101	E.CAPACITOR 25V 100U	3	

Ref.No.		Part No.	Part Name & Description	Pcs	Remarks
D1		MA151WA	DIODE	1	
D2		MA153	DIODE	1	
D3		MA151K	DIODE	1	
D4,D5		MA151WA	DIODE	2	
D7-D9		MA151K	DIODE	3	
D10-13		MA151K	DIODE	4	
D15		MA151K	DIODE	1	
D16		MA151WK	DIODE	1	
D17		MA151WA	DIODE	1	
D18,19		MA151K	DIODE	2	
D20		MA151WK	DIODE	1	
D500		MA151K	DIODE	1	
D501-06		10E1	DIODE	6	
D507,08		MA151K	DIODE	2	
D509		10E1	DIODE	1	
D510		MA151WK	DIODE	1	
D511		MA3039-H	DIODE	1	
D512		MA3075H	DIODE	1	
D513		MA3051-H	DIODE	1	
D514		MA3056-H	DIODE	1	
D515		MA3100-M	DIODE	1	
IC1		MC14024BF	IC	1	
IC2		MC34051M	IC	1	
IC3		TMPZ84C43AF6	IC	1	
IC4		UPD71054GB	IC	1	
IC5		HD64180ZF8	IC	1	
IC6		TL7705CPSB	IC	1	
IC7		VSI1121	IC	1	
IC8,C9		MC74HC541F	IC	2	
IC10		MBM221220	IC	1	
IC11		VSI0234	IC	1	
IC13		MC74HC4538F	IC	1	
IC14		MC74HC541F	IC	1	
IC15		MC74HC245AF	IC	1	
IC16,17		MC74HC138AF	IC	2	
IC18		MB89363BPF	IC	1	
IC19,20		MC14094BF	IC	2	
IC21		MB89363BPF	IC	1	
IC24		MC14013BF	IC	1	
IC25,26		MC14027BF	IC	2	
IC27-29		MC14538BF	IC	3	
IC30		MB621176PF	IC	1	
IC31		MB89363BPF	IC	1	
IC34		MC14094BF	IC	1	
IC35		MB89363BPF	IC	1	
IC36-41		MC14021BF	IC	6	
IC42		MB89363BPF	IC	1	
IC43,44		MC14094BF	IC	2	
IC45		MC14021BF	IC	1	
IC46		M50455-001SP	IC	1	
IC47,48		MC14050BF	IC	2	
IC49		SN74LS38NS	IC	1	
IC50,51		MC74HC132AF	IC	2	
IC52		MC74HC04AF	IC	1	
IC53,54		MC14049UBF	IC	2	
IC55		MC74HC00AF	IC	1	
IC56		M74F32FP	IC	1	
IC57		MN4030BS	IC	1	
IC58		MC74HC541F	IC	1	
IC59		LM2903M	IC	1	
IC60,61		NJM2901M	IC	2	
IC62		MC74HC00AF	IC	1	
IC63		MC74HC138AF	IC	1	
IC64,65		MC14021BF	IC	2	
IC66,67		MC14094BF	IC	2	
IC68		MB89363BPF	IC	1	
IC69		TC74HC190AF	IC	1	
IC71		MC14538BF	IC	1	
IC72		MC74HC86F	IC	1	
IC75		MN4030BS	IC	1	
IC500		PU3124	IC	1	

Ref.No.		Part No.	Part Name & Description	Pcs	Remarks
IC501		PU4124	IC	1	
IC502,03		BA6238AU2M	IC	2	
IC7S		VJS2336A032	CONNECTOR (FEMALE)	1	
IC10S		VJS2336A018	CONNECTOR (FEMALE)	1	
L1		VLP0017	COIL	1	
L2		VLQEL05S150J	COIL 15UH	1	
Q1		2SB710	TRANSISTOR	1	(Q,R)
Q2		DTC144EK	TRANSISTOR-RESISTOR	1	
Q3,Q4		DTC114YK	TRANSISTOR-RESISTOR	2	
Q5		UN2214	TRANSISTOR-RESISTOR	1	
Q9		UN2214	TRANSISTOR-RESISTOR	1	
Q15		2SB710	TRANSISTOR	1	(Q,R)
Q16		2SD602	TRANSISTOR	1	(Q,R)
Q17-22		DTC144EK	TRANSISTOR-RESISTOR	6	
Q25-27		DTC144EK	TRANSISTOR-RESISTOR	3	
Q29-35		DTC144EK	TRANSISTOR-RESISTOR	7	
Q38-42		DTC144EK	TRANSISTOR-RESISTOR	5	
Q44		DTC144EK	TRANSISTOR-RESISTOR	1	
Q46,47		DTC144EK	TRANSISTOR-RESISTOR	2	
Q48		2SD946A	TRANSISTOR	1	
Q500,01		UN2213	TRANSISTOR-RESISTOR	2	
Q502,03		2SB709-R	TRANSISTOR CHIP	2	(Q,R)
Q504		UN2213	TRANSISTOR-RESISTOR	1	
Q505,06		2SB709-R	TRANSISTOR CHIP	2	(Q,R)
Q507		UN2213	TRANSISTOR-RESISTOR	1	
Q508,09		2SB709-R	TRANSISTOR CHIP	2	(Q,R)
Q510-14		UN2213	TRANSISTOR-RESISTOR	5	
Q515		2SB709-R	TRANSISTOR CHIP	1	(Q,R)
			RESISTORS		
R1		ERJ6GEYG223	M.RESISTOR CH 1/10W 22K	1	
R2		ERJ6GEY0R00	M.RESISTOR CH 1/10W 0	1	
R3		ERJ6GEYG223	M.RESISTOR CH 1/10W 22K	1	
R4		ERJ6GEY0R00	M.RESISTOR CH 1/10W 0	1	
R5		ERJ6GEYJ562	M.RESISTOR CH 1/10W 5.6K	1	
R6		ERJ6GEYJ103	M.RESISTOR CH 1/10W 10K	1	
R7-R9		ERJ6GEYJ681	M.RESISTOR CH 1/10W 680	3	
R10		ERJ6GEYJ473	M.RESISTOR CH 1/10W 47K	1	
R11		ERJ6GEYJ152	M.RESISTOR CH 1/10W 1.5K	1	
R12		ERJ6GEYJ101	M.RESISTOR CH 1/10W 100	1	
R13,14		ERJ6GEYJ152	M.RESISTOR CH 1/10W 1.5K	2	
R15		ERJ6GEYJ101	M.RESISTOR CH 1/10W 100	1	
R16		ERJ6GEYJ152	M.RESISTOR CH 1/10W 1.5K	1	
R17		ERJ6GEYJ473	M.RESISTOR CH 1/10W 47K	1	
R18		ERJ6GEYJ472	M.RESISTOR CH 1/10W 4.7K	1	
R19-22		ERJ6GEYJ473	M.RESISTOR CH 1/10W 47K	4	
R23-31		ERJ6GEYJ103	M.RESISTOR CH 1/10W 10K	9	
R32		ERJ6GEYJ472	M.RESISTOR CH 1/10W 4.7K	1	
R33		ERJ6GEYJ102	M.RESISTOR CH 1/10W 1K	1	
R34		ERJ6GEYJ103	M.RESISTOR CH 1/10W 10K	1	
R35		ERJ6GEYJ473	M.RESISTOR CH 1/10W 47K	1	
R36		ERJ6GEYJ103	M.RESISTOR CH 1/10W 10K	1	
R37-47		ERJ6GEYJ473	M.RESISTOR CH 1/10W 47K	11	
R48		ERJ6GEYJ474	M.RESISTOR CH 1/10W 470K	1	
R49		ERJ6GEYJ103	M.RESISTOR CH 1/10W 10K	1	
R50		ERJ6GEYG223	M.RESISTOR CH 1/10W 22K	1	
R51,52		ERJ6GEYJ473	M.RESISTOR CH 1/10W 47K	2	
R53		ERJ6GEYG223	M.RESISTOR CH 1/10W 22K	1	
R54-72		ERJ6GEYJ103	M.RESISTOR CH 1/10W 10K	19	
R73-77		ERJ6GEYJ473	M.RESISTOR CH 1/10W 47K	5	
R79		ERJ6GEYJ473	M.RESISTOR CH 1/10W 47K	1	
R81-85		ERJ6GEYJ473	M.RESISTOR CH 1/10W 47K	5	
R86,87		ERJ6GEYG223	M.RESISTOR CH 1/10W 22K	2	
R88		ERJ6GEYJ473	M.RESISTOR CH 1/10W 47K	1	
R93-96		ERJ6GEYJ473	M.RESISTOR CH 1/10W 47K	4	
R97		ERJ6GEYJ101	M.RESISTOR CH 1/10W 100	1	
R100		ERJ6GEYJ101	M.RESISTOR CH 1/10W 100	1	

Ref.No.		Part No.	Part Name & Description	Pcs	Remarks
R101		ERJ6GEYJ473	M.RESISTOR CH 1/10W 47K	1	
R102,03		ERJ6GEYJ101	M.RESISTOR CH 1/10W 100	2	
R104		ERJ6GEYG223	M.RESISTOR CH 1/10W 22K	1	
R105		ERJ6GEYJ103	M.RESISTOR CH 1/10W 10K	1	
R106		ERJ6GEYJ474	M.RESISTOR CH 1/10W 470K	1	
R107-22		ERJ6GEYJ103	M.RESISTOR CH 1/10W 10K	16	
R123-25		ERJ6GEYJ101	M.RESISTOR CH 1/10W 100	3	
R126,27		ERJ6GEYJ562	M.RESISTOR CH 1/10W 5.6K	2	
R128		ERJ6GEYJ472	M.RESISTOR CH 1/10W 4.7K	1	
R129		ERJ6GEYG223	M.RESISTOR CH 1/10W 22K	1	
R130-32		ERJ6GEYJ473	M.RESISTOR CH 1/10W 47K	3	
R133,34		ERJ6GEYJ562	M.RESISTOR CH 1/10W 5.6K	2	
R135		ERJ6GEYJ101	M.RESISTOR CH 1/10W 100	1	
R136		ERJ6GEYG223	M.RESISTOR CH 1/10W 22K	1	
R137-43		ERJ6GEYJ473	M.RESISTOR CH 1/10W 47K	7	
R144		ERJ6GEYJ332	M.RESISTOR CH 1/10W 3.3K	1	
R145		ERJ6GEYJ101	M.RESISTOR CH 1/10W 100	1	
R146		ERJ6GEYG223	M.RESISTOR CH 1/10W 22K	1	
R147		ERJ6GEYJ332	M.RESISTOR CH 1/10W 3.3K	1	
R148		ERJ6GEYJ101	M.RESISTOR CH 1/10W 100	1	
R149		ERJ6GEYJ102	M.RESISTOR CH 1/10W 1K	1	
R150		ERJ6GEYJ332	M.RESISTOR CH 1/10W 3.3K	1	
R151		ERJ6GEYJ101	M.RESISTOR CH 1/10W 100	1	
R152		ERJ6GEYG223	M.RESISTOR CH 1/10W 22K	1	
R153		ERJ6GEYJ332	M.RESISTOR CH 1/10W 3.3K	1	
R154		ERJ6GEYJ101	M.RESISTOR CH 1/10W 100	1	
R155		ERJ6GEYJ102	M.RESISTOR CH 1/10W 1K	1	
R156,57		ERJ6GEYJ104	M.RESISTOR CH 1/10W 100K	2	
R158		ERJ6GEYJ332	M.RESISTOR CH 1/10W 3.3K	1	
R159		ERJ6GEYJ103	M.RESISTOR CH 1/10W 10K	1	
R160,61		ERJ6GEYJ102	M.RESISTOR CH 1/10W 1K	2	
R162		ERJ6GEYJ332	M.RESISTOR CH 1/10W 3.3K	1	
R163		ERJ6GEYJ103	M.RESISTOR CH 1/10W 10K	1	
R164		ERJ6GEYJ105	M.RESISTOR CH 1/10W 1M	1	
R165		ERJ6GEYG223	M.RESISTOR CH 1/10W 22K	1	
R166		ERJ6GEYJ105	M.RESISTOR CH 1/10W 1M	1	
R167		ERJ6GEYG223	M.RESISTOR CH 1/10W 22K	1	
R168,69		ERJ6GEYJ103	M.RESISTOR CH 1/10W 10K	2	
R170		ERJ6GEYJ104	M.RESISTOR CH 1/10W 100K	1	
R171		VRE0034E623	M.RESISTOR CH 1/10W 62K	1	
R172		ERJ6GEYJ104	M.RESISTOR CH 1/10W 100K	1	
R173-83		ERJ6GEYJ103	M.RESISTOR CH 1/10W 10K	11	
R184-86		ERJ6GEYJ473	M.RESISTOR CH 1/10W 47K	3	
R187-91		ERJ6GEYJ103	M.RESISTOR CH 1/10W 10K	5	
R192,93		ERJ6GEYJ101	M.RESISTOR CH 1/10W 100	2	
R194-01		ERJ6GEYJ103	M.RESISTOR CH 1/10W 10K	8	
R202		ERJ6GEYJ473	M.RESISTOR CH 1/10W 47K	1	
R203-06		ERJ6GEYJ103	M.RESISTOR CH 1/10W 10K	4	
R207,08		ERJ6GEYG223	M.RESISTOR CH 1/10W 22K	2	
R209,10		ERJ6GEYJ122	M.RESI6TOR CH 1/10W 1.2K	2	
R211		ERJ6GEYJ101	M.RESISTOR CH 1/10W 100	1	
R212		ERJ6GEYJ474	M.RESISTOR CH 1/10W 470K	1	
R213		ERJ6GEYJ103	M.RESISTOR CH 1/10W 10K	1	
R214		ERJ6GEYG223	M.RESISTOR CH 1/10W 22K	1	
R215		ERJ6GEYJ473	M.RESISTOR CH 1/10W 47K	1	
R216,17		ERJ6GEYG223	M.RESISTOR CH 1/10W 22K	2	
R218,19		ERJ6GEYJ101	M.RESISTOR CH 1/10W 100	2	
R220		ERJ6GEYG223	M.RESISTOR CH 1/10W 22K	1	
R221		ERJ6GEYJ101	M.RESISTOR CH 1/10W 100	1	
R222		ERJ6GEYJ474	M.RESISTOR CH 1/10W 470K	1	
R223		ERJ6GEYJ103	M.RESISTOR CH 1/10W 10K	1	
R224		ERJ6GEYG223	M.RESISTOR CH 1/10W 22K	1	
R225		ERJ6GEYJ102	M.RESISTOR CH 1/10W 1K	1	
R226		ERJ6GEYJ473	M.RESISTOR CH 1/10W 47K	1	
R227		ERJ6GEYJ103	M.RESISTOR CH 1/10W 10K	1	
R228		ERJ6GEYG223	M.RESISTOR CH 1/10W 22K	1	
R229		ERJ6GEYJ473	M.RESISTOR CH 1/10W 47K	1	
R230		ERJ6GEYJ103	M.RESISTOR CH 1/10W 10K	1	
R231		ERJ6GEYJ101	M.RESISTOR CH 1/10W 100	1	
R232		ERJ6GEYG223	M.RESISTOR CH 1/10W 22K	1	
R233,34		ERJ6GEYJ473	M.RESISTOR CH 1/10W 47K	2	
R235		ERJ6GEYG223	M.RESISTOR CH 1/10W 22K	1	
R236-39		ERJ6GEYJ473	M.RESISTOR CH 1/10W 47K	4	
R240		ERJ6GEYJ103	M.RESISTOR CH 1/10W 10K	1	
R241-45		ERJ6GEYJ473	M.RESISTOR CH 1/10W 47K	5	

Ref.No.		Part No.	Part Name & Description	Pcs	Remarks
R247		ERJ6GEYJ103	M.RESISTOR CH 1/10W 10K	1	
R248,49		ERJ6GEYJ102	M.RESISTOR CH 1/10W 1K	2	
R250		ERJ6GEYG223	M.RESISTOR CH 1/10W 22K	1	
R251		ERJ6GEYJ123	M.RESISTOR CH 1/10W 12K	1	
R252		ERJ6GEYJ103	M.RESISTOR CH 1/10W 10K	1	
R253		ERJ6GEYJ393	M.RESISTOR CH 1/10W 39K	1	
R254		ERJ6GEYG223	M.RESISTOR CH 1/10W 22K	1	
R255		ERJ6GEYJ562	M.RESISTOR CH 1/10W 5.6K	1	
R256		ERJ6GEYG223	M.RESISTOR CH 1/10W 22K	1	
R257		ERJ6GEYJ473	M.RESISTOR CH 1/10W 47K	1	
R258		ERJ6GEYJ103	M.RESISTOR CH 1/10W 10K	1	
R259,60		ERJ6GEYG223	M.RESISTOR CH 1/10W 22K	2	
R261		ERJ6GEYJ183	M.RESISTOR CH 1/10W 18K	1	
R262		ERJ6GEYJ103	M.RESISTOR CH 1/10W 10K	1	
R263		ERJ6GEYJ333	M.RESISTOR CH 1/10W 33K	1	
R264,65		ERJ6GEYJ473	M.RESISTOR CH 1/10W 47K	2	
R266-68		ERJ6GEYJ101	M.RESISTOR CH 1/10W 100	3	
R269		ERJ6GEYJ103	M.RESISTOR CH 1/10W 10K	1	
R270		ERJ6GEYJ101	M.RESISTOR CH 1/10W 100	1	
R272-77		ERJ6GEYJ103	M.RESISTOR CH 1/10W 10K	6	
R278-85		ERJ6GEYJ473	M.RESISTOR CH 1/10W 47K	8	
R286		ERJ6GEYJ103	M.RESISTOR CH 1/10W 10K	1	
R287		ERJ6GEYG223	M.RESISTOR CH 1/10W 22K	1	
R288,89		ERJ6GEYJ103	M.RESISTOR CH 1/10W 10K	2	
R290		ERJ6GEYJ473	M.RESISTOR CH 1/10W 47K	1	
R291,92		ERJ6GEYJ101	M.RESISTOR CH 1/10W 100	2	
R294		ERJ6GEYJ103	M.RESISTOR CH 1/10W 10K	1	
R295		ERJ6GEYJ564	M.RESISTOR CH 1/10W 560K	1	
R296		ERJ6GEYJ473	M.RESISTOR CH 1/10W 47K	1	
R301		ERJ6GEYG563	M.RESISTOR CH 1/10W 56K	1	
R302,03		ERJ6GEYJ333	M.RESISTOR CH 1/10W 33K	2	
R304		ERJ6GEYJ473	M.RESISTOR CH 1/10W 47K	1	
R502		ERJ6GEYJ122	M.RESISTOR CH 1/10W 1.2K	1	
R504		ERJ6GEYJ222	M.RESISTOR CH 1/10W 2.2K	1	
R505		ERJ6GEYG223	M.RESISTOR CH 1/10W 22K	1	
R506		ERJ6GEYJ103	M.RESISTOR CH 1/10W 10K	1	
R507		ERJ6GEYJ102	M.RESISTOR CH 1/10W 1K	1	
R508		ERJ6GEYJ104	M.RESISTOR CH 1/10W 100K	1	
R509		ERJ6GEYJ103	M.RESISTOR CH 1/10W 10K	1	
R510		ERJ6GEYG223	M.RESISTOR CH 1/10W 22K	1	
R511		ERJ6GEYJ102	M.RESISTOR CH 1/10W 1K	1	
R512		ERJ6GEYJ104	M.RESISTOR CH 1/10W 100K	1	
R513		ERJ6GEYJ222	M.RESISTOR CH 1/10W 2.2K	1	
R514		ERJ6GEYG223	M.RESISTOR CH 1/10W 22K	1	
R515		ERJ6GEYJ103	M.RESISTOR CH 1/10W 10K	1	
R516		ERJ6GEYJ102	M.RESISTOR CH 1/10W 1K	1	
R517		ERJ6GEYJ104	M.RESISTOR CH 1/10W 100K	1	
R518		ERJ6GEYG223	M.RESISTOR CH 1/10W 22K	1	
R519		ERJ6GEYJ103	M.RESISTOR CH 1/10W 10K	1	
R520		ERJ6GEYJ102	M.RESISTOR CH 1/10W 1K	1	
R521		ERJ6GEYJ104	M.RESISTOR CH 1/10W 100K	1	
R522		ERJ6GEYJ222	M.RESISTOR CH 1/10W 2.2K	1	
R523		ERJ6GEYG223	M.RESISTOR CH 1/10W 22K	1	
R524		ERJ6GEYJ103	M.RESISTOR CH 1/10W 10K	1	
R525		ERJ6GEYJ102	M.RESISTOR CH 1/10W 1K	1	
R526		ERJ6GEYJ104	M.RESISTOR CH 1/10W 100K	1	
R527		ERJ6GEYG223	M.RESISTOR CH 1/10W 22K	1	
R528		ERJ6GEYJ103	M.RESISTOR CH 1/10W 10K	1	
R529		ERJ6GEYJ102	M.RESISTOR CH 1/10W 1K	1	
R530		ERJ6GEYJ104	M.RESISTOR CH 1/10W 100K	1	
R531,32		ERX1SJ1R0	M.RESISTOR 1W 1.0	2	
R533		ERJ6GEYJ104	M.RESISTOR CH 1/10W 100K	1	
R536		ERJ6GEYJ562	M.RESISTOR CH 1/10W 5.6K	1	
R537		ERJ6GEYJ222	M.RESISTOR CH 1/10W 2.2K	1	
R538		ERJ6GEYJ103	M.RESISTOR CH 1/10W 10K	1	
R539		ERJ6GEYG223	M.RESISTOR CH 1/10W 22K	1	
R540		ERJ6GEYJ102	M.RESISTOR CH 1/10W 1K	1	
R541		ERJ6GEYJ104	M.RESISTOR CH 1/10W 100K	1	
R542		ERJ6GEYJ272	M.RESISTOR CH 1/10W 2.7K	1	
R543		ERJ6GEYJ271	M.RESISTOR CH 1/10W 270	1	
SW1		VSS0223	SWITCH	1	
SW3		VSR0045	SWITCH	1	

Ref.No.		Part No.	Part Name & Description	Pcs	Remarks
SW4-W6		EVQQEJ06K	SWITCH	3	
SW7		VST0096	SWITCH	1	
TP17-19		VJR0646	TEST POINT	3	
TPG1,G2		VJR0646	TEST POINT	2	
VC1		ECV1ZW20X60	V.CAPACITOR 20P	1	
X1		VSX0373	CRYSTAL OSCILLATOR	1	
			MISCELLANEOUS		
		VGH0520	SLIDE SW SHEET	1	
		VGH2426	SLIDE SW SHEET	1	
		VML2143	CARD PULLER	1	
		VML2144	CARD PULLER	1	
		VMZ1548	BARRIER	1	
		VSC3058	SHIELD CASE	1	
		VSC3059	SHIELD CASE	1	
		VXA3967	P.C.B. SHIELD PLATE	1	
		XNG26E	NUT	4	
		XNG3ES	NUT	2	
		XSN3+6S	SCREW	2	
		XYNV3+K6FR	SCREW	4	
		XYN26+C10	SCREW	4	

Ref.No.		Part No.	Part Name & Description	Pcs	Remarks
	■	VEP86121E	P.C.BOARD W/COMPONENT		FOR AU-62H
			B1 SYSTEM CONTROL		
B1L		VJP2899B096	CONNECTOR(MALE)	1	
B1R		VJP2899B096	CONNECTOR(MALE)	1	
			CAPACITORS		
C1,C2		ECUM1H331JCN	C.CAPACITOR CH 50V 330P	2	
C3-C5		ECUM1H102JCN	C.CAPACITOR CH 50V 1000P	3	
C6-C9		ECUM1H103ZFN	C.CAPACITOR CH 50V 0.01U	4	
C10		ECEA0JU221	E.CAPACITOR 6.3V 220U	1	
C11		ECEA0JU101	E.CAPACITOR 6.3V 100U	1	
C12,13		ECUM1E104ZFN	C.CAPACITOR CH 25V 0.1U	2	
C14,15		ECUM1H270JCN	C.CAPACITOR CH 50V 27P	2	
C16-18		ECUM1H103ZFN	C.CAPACITOR CH 50V 0.01U	3	
C19		ECEA1HU3R3	E.CAPACITOR 50V 3.3U	1	
C20		ECQM1H104JF	P.CAPACITOR 50V 0.1U	1	
C21-23		ECUM1H103ZFN	C.CAPACITOR CH 50V 0.01U	3	
C25		ECEA0JU471	E.CAPACITOR 6.3V 470U	1	
C26,27		ECUM1H680JCN	C.CAPACITOR CH 50V 68P	2	
C28-33		ECUM1H103ZFN	C.CAPACITOR CH 50V 0.01U	6	
C34		ECUM1E104ZFN	C.CAPACITOR CH 25V 0.1U	1	
C35,36		ECUM1H103ZFN	C.CAPACITOR CH 50V 0.01U	2	
C37		ECEA1CU100	E.CAPACITOR 16V 10U	1	
C38-41		ECUM1E104ZFN	C.CAPACITOR CH 25V 0.1U	4	
C42-47		ECUM1H103ZFN	C.CAPACITOR CH 50V 0.01U	6	
C50		ECUM1H103ZFN	C.CAPACITOR CH 50V 0.01U	1	
C51		ECEA1CU100	E.CAPACITOR 16V 10U	1	
C52		ECUM1E104ZFN	C.CAPACITOR CH 25V 0.1U	1	
C53		ECUM1H103ZFN	C.CAPACITOR CH 50V 0.01U	1	
C75-82		ECUM1H103ZFN	C.CAPACITOR CH 50V 0.01U	8	
C83,84		ECEA1HU010	E.CAPACITOR 50V 1U	2	
C85		ECEA1CN100S	E.CAPACITOR 16V 10U	1	
C86		ECUM1H101JCN	C.CAPACITOR CH 50V 100P	1	
C87		ECUM1H103ZFN	C.CAPACITOR CH 50V 0.01U	1	
C88		ECEA1CN100S	E.CAPACITOR 16V 10U	1	
C89		ECUM1H101JCN	C.CAPACITOR CH 50V 100P	1	
C90		ECUM1H103ZFN	C.CAPACITOR CH 50V 0.01U	1	
C91		ECEA1HU010	E.CAPACITOR 50V 1U	1	
C92		ECUM1H103ZFN	C.CAPACITOR CH 50V 0.01U	1	
C94		ECEA1HU010	E.CAPACITOR 50V 1U	1	
C95		ECUM1H103ZFN	C.CAPACITOR CH 50V 0.01U	1	
C96-99		ECUM1E104ZFN	C.CAPACITOR CH 25V 0.1U	4	
C100,01		ECUM1E104ZFN	C.CAPACITOR CH 25V 0.1U	2	
C105,06		ECUM1H103ZFN	C.CAPACITOR CH 50V 0.01U	2	
C107		ECUM1E104ZFN	C.CAPACITOR CH 25V 0.1U	1	
C108-14		ECUM1H103ZFN	C.CAPACITOR CH 50V 0.01U	7	
C115		ECUM1E104ZFN	C.CAPACITOR CH 25V 0.1U	1	
C116-19		ECUM1H103ZFN	C.CAPACITOR CH 50V 0.01U	4	
C120		ECEA1HU010	E.CAPACITOR 50V 1U	1	
C121-23		ECUM1H103ZFN	C.CAPACITOR CH 50V 0.01U	3	
C124		ECUM1H150JCN	C.CAPACITOR CH 50V 15P	1	
C125		ECUM1H270JCN	C.CAPACITOR CH 50V 27P	1	
C127-38		ECUM1H103ZFN	C.CAPACITOR CH 50V 0.01U	12	
C140		ECUM1H103ZFN	C.CAPACITOR CH 50V 0.01U	1	
C141		ECEA1HU2R2	E.CAPACITOR 50V 2.2U	1	
C142		ECQM1H154JF	P.CAPACITOR 50V 0.15U	1	
C143		ECQM1H104JF	P.CAPACITOR 50V 0.1U	1	
C147,48		ECUM1H103ZFN	C.CAPACITOR CH 50V 0.01U	2	
C151		ECUM1E104ZFN	C.CAPACITOR CH 25V 0.1U	1	
C154		ECUM1H102JCN	C.CAPACITOR CH 50V 1000P	1	
C500-02		ECEA1EU4R7	E.CAPACITOR 25V 4.7U	3	
C503-05		ECEA1HN2R2S	E.CAPACITOR 50V 2.2U	3	
C506-08		ECEA1EU101	E.CAPACITOR 25V 100U	3	

Ref.No.		Part No.	Part Name & Description	Pcs	Remarks
D1		MA151WA	DIODE	1	
D2		MA153	DIODE	1	
D3		MA151K	DIODE	1	
D4,D5		MA151WA	DIODE	2	
D7-D9		MA151K	DIODE	3	
D10-13		MA151K	DIODE	4	
D15		MA151K	DIODE	1	
D16		MA151WK	DIODE	1	
D17		MA151WA	DIODE	1	
D18,19		MA151K	DIODE	2	
D20		MA151WK	DIODE	1	
D500		MA151K	DIODE	1	
D501-06		10E1	DIODE	6	
D507,08		MA151K	DIODE	2	
D509		10E1	DIODE	1	
D510		MA151WK	DIODE	1	
D511		MA3039-H	DIODE	1	
D512		MA3075H	DIODE	1	
D513		MA3051-H	DIODE	1	
D514		MA3056-H	DIODE	1	
D515		MA3100-M	DIODE	1	
IC1		MC14024BF	IC	1	
IC2		MC34051M	IC	1	
IC3		TMPZ84C43AF6	IC	1	
IC4		UPD71054GB	IC	1	
IC5		HD64180ZF8	IC	1	
IC6		TL7705CPSB	IC	1	
IC7		VSI1120	IC	1	
IC8,C9		MC74HC541F	IC	2	
IC10		MBM221220	IC	1	
IC11		VSI0234	IC	1	
IC13		MC74HC4538F	IC	1	
IC14		MC74HC541F	IC	1	
IC15		MC74HC245AF	IC	1	
IC16,17		MC74HC138AF	IC	2	
IC18		MB89363BPF	IC	1	
IC19,20		MC14094BF	IC	2	
IC21		MB89363BPF	IC	1	
IC24		MC14013BF	IC	1	
IC25,26		MC14027BF	IC	2	
IC27-29		MC14538BF	IC	3	
IC30		MB621176PF	IC	1	
IC31		MB89363BPF	IC	1	
IC34		MC14094BF	IC	1	
IC35		MB89363BPF	IC	1	
IC36-41		MC14021BF	IC	6	
IC42		MB89363BPF	IC	1	
IC43,44		MC14094BF	IC	2	
IC45		MC14021BF	IC	1	
IC46		M50455-001SP	IC	1	
IC47,48		MC14050BF	IC	2	
IC49		SN74LS38NS	IC	1	
IC50,51		MC74HC132AF	IC	2	
IC52		MC74HC04AF	IC	1	
IC53,54		MC14049UBF	IC	2	
IC55		MC74HC00AF	IC	1	
IC56		M74F32FP	IC	1	
IC57		MN4030BS	IC	1	
IC58		MC74HC541F	IC	1	
IC59		LM2903M	IC	1	
IC60,61		NJM2901M	IC	2	
IC62		MC74HC00AF	IC	1	
IC63		MC74HC138AF	IC	1	
IC64,65		MC14021BF	IC	2	
IC66,67		MC14094BF	IC	2	
IC68		MB89363BPF	IC	1	
IC69		TC74HC190AF	IC	1	
IC71		MC14538BF	IC	1	
IC72		MC74HC86F	IC	1	
IC75		MN4030BS	IC	1	
IC500		PU3124	IC	1	

Ref.No.		Part No.	Part Name & Description	Pcs	Remarks
IC501		PU4124	IC	1	
IC502,03		BA6238AU2M	IC	2	
IC7S		VJS2336A032	CONNECTOR (FEMALE)	1	
IC10S		VJS2336A018	CONNECTOR (FEMALE)	1	
L1		VLP0017	COIL	1	
L2		VLQEL05S150J	COIL 15UH	1	
Q1		2SB710	TRANSISTOR	1	(Q,R)
Q2		DTC144EK	TRANSISTOR-RESISTOR	1	
Q3,Q4		DTC114YK	TRANSISTOR-RESISTOR	2	
Q5		UN2214	TRANSISTOR-RESISTOR	1	
Q9		UN2214	TRANSISTOR-RESISTOR	1	
Q15		2SB710	TRANSISTOR	1	(Q,R)
Q16		2SD602	TRANSISTOR	1	(Q,R)
Q17-22		DTC144EK	TRANSISTOR-RESISTOR	6	
Q25-27		DTC144EK	TRANSISTOR-RESISTOR	3	
Q29-35		DTC144EK	TRANSISTOR-RESISTOR	7	
Q38-42		DTC144EK	TRANSISTOR-RESISTOR	5	
Q44		DTC144EK	TRANSISTOR-RESISTOR	1	
Q46,47		DTC144EK	TRANSISTOR-RESISTOR	2	
Q48		2SD946A	TRANSISTOR	1	
Q500,01		UN2213	TRANSISTOR-RESISTOR	2	
Q502,03		2SB709-R	TRANSISTOR CHIP	2	(Q,R)
Q504		UN2213	TRANSISTOR-RESISTOR	1	
Q505,06		2SB709-R	TRANSISTOR CHIP	2	(Q,R)
Q507		UN2213	TRANSISTOR-RESISTOR	1	
Q508,09		2SB709-R	TRANSISTOR CHIP	2	(Q,R)
Q510-14		UN2213	TRANSISTOR-RESISTOR	5	
Q515		2SB709-R	TRANSISTOR CHIP	1	(Q,R)
			RESISTORS		
R1		ERJ6GEYG223	M.RESISTOR CH 1/10W 22K	1	
R2		ERJ6GEY0R00	M.RESISTOR CH 1/10W 0	1	
R3		ERJ6GEYG223	M.RESISTOR CH 1/10W 22K	1	
R4		ERJ6GEY0R00	M.RESISTOR CH 1/10W 0	1	
R5		ERJ6GEYJ562	M.RESISTOR CH 1/10W 5.6K	1	
R6		ERJ6GEYJ103	M.RESISTOR CH 1/10W 10K	1	
R7-R9		ERJ6GEYJ681	M.RESISTOR CH 1/10W 680	3	
R10		ERJ6GEYJ473	M.RESISTOR CH 1/10W 47K	1	
R11		ERJ6GEYJ152	M.RESISTOR CH 1/10W 1.5K	1	
R12		ERJ6GEYJ101	M.RESISTOR CH 1/10W 100	1	
R13,14		ERJ6GEYJ152	M.RESISTOR CH 1/10W 1.5K	2	
R15		ERJ6GEYJ101	M.RESISTOR CH 1/10W 100	1	
R16		ERJ6GEYJ152	M.RESISTOR CH 1/10W 1.5K	1	
R17		ERJ6GEYJ473	M.RESISTOR CH 1/10W 47K	1	
R18		ERJ6GEYJ472	M.RESISTOR CH 1/10W 4.7K	1	
R19-22		ERJ6GEYJ473	M.RESISTOR CH 1/10W 47K	4	
R23-31		ERJ6GEYJ103	M.RESISTOR CH 1/10W 10K	9	
R32		ERJ6GEYJ472	M.RESISTOR CH 1/10W 4.7K	1	
R33		ERJ6GEYJ102	M.RESISTOR CH 1/10W 1K	1	
R34		ERJ6GEYJ103	M.RESISTOR CH 1/10W 10K	1	
R35		ERJ6GEYJ473	M.RESISTOR CH 1/10W 47K	1	
R36		ERJ6GEYJ103	M.RESISTOR CH 1/10W 10K	1	
R37-47		ERJ6GEYJ473	M.RESISTOR CH 1/10W 47K	11	
R48		ERJ6GEYJ474	M.RESISTOR CH 1/10W 470K	1	
R49		ERJ6GEYJ103	M.RESISTOR CH 1/10W 10K	1	
R50		ERJ6GEYG223	M.RESISTOR CH 1/10W 22K	1	
R51,52		ERJ6GEYJ473	M.RESISTOR CH 1/10W 47K	2	
R53		ERJ6GEYG223	M.RESISTOR CH 1/10W 22K	1	
R54-72		ERJ6GEYJ103	M.RESISTOR CH 1/10W 10K	19	
R73-77		ERJ6GEYJ473	M.RESISTOR CH 1/10W 47K	5	
R79		ERJ6GEYJ473	M.RESISTOR CH 1/10W 47K	1	
R81-85		ERJ6GEYJ473	M.RESISTOR CH 1/10W 47K	5	
R86,87		ERJ6GEYG223	M.RESISTOR CH 1/10W 22K	2	
R88		ERJ6GEYJ473	M.RESISTOR CH 1/10W 47K	1	
R93-96		ERJ6GEYJ473	M.RESISTOR CH 1/10W 47K	4	
R97		ERJ6GEYJ101	M.RESISTOR CH 1/10W 100	1	
R100		ERJ6GEYJ101	M.RESISTOR CH 1/10W 100	1	

Ref.No.		Part No.	Part Name & Description	Pcs	Remarks
R101		ERJ6GEYJ473	M.RESISTOR CH 1/10W 47K	1	
R102,03		ERJ6GEYJ101	M.RESISTOR CH 1/10W 100	2	
R104		ERJ6GEYG223	M.RESISTOR CH 1/10W 22K	1	
R105		ERJ6GEYJ103	M.RESISTOR CH 1/10W 10K	1	
R106		ERJ6GEYJ474	M.RESISTOR CH 1/10W 470K	1	
R107-22		ERJ6GEYJ103	M.RESISTOR CH 1/10W 10K	16	
R123-25		ERJ6GEYJ101	M.RESISTOR CH 1/10W 100	3	
R126,27		ERJ6GEYJ562	M.RESISTOR CH 1/10W 5.6K	2	
R128		ERJ6GEYJ472	M.RESISTOR CH 1/10W 4.7K	1	
R129		ERJ6GEYG223	M.RESISTOR CH 1/10W 22K	1	
R130-32		ERJ6GEYJ473	M.RESISTOR CH 1/10W 47K	3	
R133,34		ERJ6GEYJ562	M.RESISTOR CH 1/10W 5.6K	2	
R135		ERJ6GEYJ101	M.RESISTOR CH 1/10W 100	1	
R136		ERJ6GEYG223	M.RESISTOR CH 1/10W 22K	1	
R137-43		ERJ6GEYJ473	M.RESISTOR CH 1/10W 47K	7	
R144		ERJ6GEYJ332	M.RESISTOR CH 1/10W 3.3K	1	
R145		ERJ6GEYJ101	M.RESISTOR CH 1/10W 100	1	
R146		ERJ6GEYG223	M.RESISTOR CH 1/10W 22K	1	
R147		ERJ6GEYJ332	M.RESISTOR CH 1/10W 3.3K	1	
R148		ERJ6GEYJ101	M.RESISTOR CH 1/10W 100	1	
R149		ERJ6GEYJ102	M.RESISTOR CH 1/10W 1K	1	
R150		ERJ6GEYJ332	M.RESISTOR CH 1/10W 3.3K	1	
R151		ERJ6GEYJ101	M.RESISTOR CH 1/10W 100	1	
R152		ERJ6GEYG223	M.RESISTOR CH 1/10W 22K	1	
R153		ERJ6GEYJ332	M.RESISTOR CH 1/10W 3.3K	1	
R154		ERJ6GEYJ101	M.RESISTOR CH 1/10W 100	1	
R155		ERJ6GEYJ102	M.RESISTOR CH 1/10W 1K	1	
R156,57		ERJ6GEYJ104	M.RESISTOR CH 1/10W 100K	2	
R158		ERJ6GEYJ332	M.RESISTOR CH 1/10W 3.3K	1	
R159		ERJ6GEYJ103	M.RESISTOR CH 1/10W 10K	1	
R160,61		ERJ6GEYJ102	M.RESISTOR CH 1/10W 1K	2	
R162		ERJ6GEYJ332	M.RESISTOR CH 1/10W 3.3K	1	
R163		ERJ6GEYJ103	M.RESISTOR CH 1/10W 10K	1	
R164		ERJ6GEYJ105	M.RESISTOR CH 1/10W 1M	1	
R165		ERJ6GEYG223	M.RESISTOR CH 1/10W 22K	1	
R166		ERJ6GEYJ105	M.RESISTOR CH 1/10W 1M	1	
R167		ERJ6GEYG223	M.RESISTOR CH 1/10W 22K	1	
R168,69		ERJ6GEYJ103	M.RESISTOR CH 1/10W 10K	2	
R170		ERJ6GEYJ104	M.RESISTOR CH 1/10W 100K	1	
R171		VRE0034E623	M.RESISTOR CH 1/10W 62K	1	
R172		ERJ6GEYJ104	M.RESISTOR CH 1/10W 100K	1	
R173-83		ERJ6GEYJ103	M.RESISTOR CH 1/10W 10K	11	
R184-86		ERJ6GEYJ473	M.RESISTOR CH 1/10W 47K	3	
R187-91		ERJ6GEYJ103	M.RESISTOR CH 1/10W 10K	5	
R192,93		ERJ6GEYJ101	M.RESISTOR CH 1/10W 100	2	
R194-01		ERJ6GEYJ103	M.RESISTOR CH 1/10W 10K	8	
R202		ERJ6GEYJ473	M.RESISTOR CH 1/10W 47K	1	
R203-06		ERJ6GEYJ103	M.RESISTOR CH 1/10W 10K	4	
R207,08		ERJ6GEYG223	M.RESISTOR CH 1/10W 22K	2	
R209,10		ERJ6GEYJ122	M.RESISTOR CH 1/10W 1.2K	2	
R211		ERJ6GEYJ101	M.RESISTOR CH 1/10W 100	1	
R212		ERJ6GEYJ474	M.RESISTOR CH 1/10W 470K	1	
R213		ERJ6GEYJ103	M.RESISTOR CH 1/10W 10K	1	
R214		ERJ6GEYG223	M.RESISTOR CH 1/10W 22K	1	
R215		ERJ6GEYJ473	M.RESISTOR CH 1/10W 47K	1	
R216,17		ERJ6GEYG223	M.RESISTOR CH 1/10W 22K	2	
R218,19		ERJ6GEYJ101	M.RESISTOR CH 1/10W 100	2	
R220		ERJ6GEYG223	M.RESISTOR CH 1/10W 22K	1	
R221		ERJ6GEYJ101	M.RESISTOR CH 1/10W 100	1	
R222		ERJ6GEYJ474	M.RESISTOR CH 1/10W 470K	1	
R223		ERJ6GEYJ103	M.RESISTOR CH 1/10W 10K	1	
R224		ERJ6GEYG223	M.RESISTOR CH 1/10W 22K	1	
R225		ERJ6GEYJ102	M.RESISTOR CH 1/10W 1K	1	
R226		ERJ6GEYJ473	M.RESISTOR CH 1/10W 47K	1	
R227		ERJ6GEYJ103	M.RESISTOR CH 1/10W 10K	1	
R228		ERJ6GEYG223	M.RESISTOR CH 1/10W 22K	1	
R229		ERJ6GEYJ473	M.RESISTOR CH 1/10W 47K	1	
R230		ERJ6GEYJ103	M.RESISTOR CH 1/10W 10K	1	
R231		ERJ6GEYJ101	M.RESISTOR CH 1/10W 100	1	
R232		ERJ6GEYG223	M.RESISTOR CH 1/10W 22K	1	
R233,34		ERJ6GEYJ473	M.RESISTOR CH 1/10W 47K	2	
R235		ERJ6GEYG223	M.RESISTOR CH 1/10W 22K	1	
R236-39		ERJ6GEYJ473	M.RESISTOR CH 1/10W 47K	4	
R240		ERJ6GEYJ103	M.RESISTOR CH 1/10W 10K	1	
R241-45		ERJ6GEYJ473	M.RESISTOR CH 1/10W 47K	5	

Ref.No.		Part No.	Part Name & Description	Pcs	Remarks
R247		ERJ6GEYJ103	M.RESISTOR CH 1/10W 10K	1	
R248,49		ERJ6GEYJ102	M.RESISTOR CH 1/10W 1K	2	
R250		ERJ6GEYG223	M.RESISTOR CH 1/10W 22K	1	
R251		ERJ6GEYJ123	M.RESISTOR CH 1/10W 12K	1	
R252		ERJ6GEYJ103	M.RESISTOR CH 1/10W 10K	1	
R253		ERJ6GEYJ393	M.RESISTOR CH 1/10W 39K	1	
R254		ERJ6GEYG223	M.RESISTOR CH 1/10W 22K	1	
R255		ERJ6GEYJ562	M.RESISTOR CH 1/10W 5.6K	1	
R256		ERJ6GEYG223	M.RESISTOR CH 1/10W 22K	1	
R257		ERJ6GEYJ473	M.RESISTOR CH 1/10W 47K	1	
R258		ERJ6GEYJ103	M.RESISTOR CH 1/10W 10K	1	
R259,60		ERJ6GEYG223	M.RESISTOR CH 1/10W 22K	2	
R261		ERJ6GEYJ183	M.RESISTOR CH 1/10W 18K	1	
R262		ERJ6GEYJ103	M.RESISTOR CH 1/10W 10K	1	
R263		ERJ6GEYJ333	M.RESISTOR CH 1/10W 33K	1	
R264,65		ERJ6GEYJ473	M.RESISTOR CH 1/10W 47K	2	
R266-68		ERJ6GEYJ101	M.RESISTOR CH 1/10W 100	3	
R269		ERJ6GEYJ103	M.RESISTOR CH 1/10W 10K	1	
R270		ERJ6GEYJ101	M.RESISTOR CH 1/10W 100	1	
R272-77		ERJ6GEYJ103	M.RESISTOR CH 1/10W 10K	6	
R278-85		ERJ6GEYJ473	M.RESISTOR CH 1/10W 47K	8	
R286		ERJ6GEYJ103	M.RESISTOR CH 1/10W 10K	1	
R287		ERJ6GEYG223	M.RESISTOR CH 1/10W 22K	1	
R288,89		ERJ6GEYJ103	M.RESISTOR CH 1/10W 10K	2	
R290		ERJ6GEYJ473	M.RESISTOR CH 1/10W 47K	1	
R291,92		ERJ6GEYJ101	M.RESISTOR CH 1/10W 100	2	
R294		ERJ6GEYJ103	M.RESISTOR CH 1/10W 10K	1	
R295		ERJ6GEYJ564	M.RESISTOR CH 1/10W 560K	1	
R296		ERJ6GEYJ473	M.RESISTOR CH 1/10W 47K	1	
R301		ERJ6GEYG563	M.RESISTOR CH 1/10W 56K	1	
R302,03		ERJ6GEYJ333	M.RESISTOR CH 1/10W 33K	2	
R304		ERJ6GEYJ473	M.RESISTOR CH 1/10W 47K	1	
R502		ERJ6GEYJ122	M.RESISTOR CH 1/10W 1.2K	1	
R504		ERJ6GEYJ222	M.RESISTOR CH 1/10W 2.2K	1	
R505		ERJ6GEYG223	M.RESISTOR CH 1/10W 22K	1	
R506		ERJ6GEYJ103	M.RESISTOR CH 1/10W 10K	1	
R507		ERJ6GEYJ102	M.RESISTOR CH 1/10W 1K	1	
R508		ERJ6GEYJ104	M.RESISTOR CH 1/10W 100K	1	
R509		ERJ6GEYJ103	M.RESISTOR CH 1/10W 10K	1	
R510		ERJ6GEYG223	M.RESISTOR CH 1/10W 22K	1	
R511		ERJ6GEYJ102	M.RESISTOR CH 1/10W 1K	1	
R512		ERJ6GEYJ104	M.RESISTOR CH 1/10W 100K	1	
R513		ERJ6GEYJ222	M.RESISTOR CH 1/10W 2.2K	1	
R514		ERJ6GEYG223	M.RESISTOR CH 1/10W 22K	1	
R515		ERJ6GEYJ103	M.RESISTOR CH 1/10W 10K	1	
R516		ERJ6GEYJ102	M.RESISTOR CH 1/10W 1K	1	
R517		ERJ6GEYJ104	M.RESISTOR CH 1/10W 100K	1	
R518		ERJ6GEYG223	M.RESISTOR CH 1/10W 22K	1	
R519		ERJ6GEYJ103	M.RESISTOR CH 1/10W 10K	1	
R520		ERJ6GEYJ102	M.RESISTOR CH 1/10W 1K	1	
R521		ERJ6GEYJ104	M.RESISTOR CH 1/10W 100K	1	
R522		ERJ6GEYJ222	M.RESISTOR CH 1/10W 2.2K	1	
R523		ERJ6GEYG223	M.RESISTOR CH 1/10W 22K	1	
R524		ERJ6GEYJ103	M.RESISTOR CH 1/10W 10K	1	
R525		ERJ6GEYJ102	M.RESISTOR CH 1/10W 1K	1	
R526		ERJ6GEYJ104	M.RESISTOR CH 1/10W 100K	1	
R527		ERJ6GEYG223	M.RESISTOR CH 1/10W 22K	1	
R528		ERJ6GEYJ103	M.RESISTOR CH 1/10W 10K	1	
R529		ERJ6GEYJ102	M.RESISTOR CH 1/10W 1K	1	
R530		ERJ6GEYJ104	M.RESISTOR CH 1/10W 100K	1	
R531,32		ERX1SJ1R0	M.RESISTOR 1W 1.0	2	
R533		ERJ6GEYJ104	M.RESISTOR CH 1/10W 100K	1	
R536		ERJ6GEYJ562	M.RESISTOR CH 1/10W 5.6K	1	
R537		ERJ6GEYJ222	M.RESISTOR CH 1/10W 2.2K	1	
R538		ERJ6GEYJ103	M.RESISTOR CH 1/10W 10K	1	
R539		ERJ6GEYG223	M.RESISTOR CH 1/10W 22K	1	
R540		ERJ6GEYJ102	M.RESISTOR CH 1/10W 1K	1	
R541		ERJ6GEYJ104	M.RESISTOR CH 1/10W 100K	1	
R542		ERJ6GEYJ272	M.RESISTOR CH 1/10W 2.7K	1	
R543		ERJ6GEYJ271	M.RESISTOR CH 1/10W 270	1	
SW1		VSS0223	SWITCH	1	
SW3		VSR0045	SWITCH	1	

Ref.No.		Part No.	Part Name & Description	Pcs	Remarks
SW4-W6		EVQQEJ06K	SWITCH	3	
SW7		VST0096	SWITCH	1	
TP17-19		VJR0646	TEST POINT	3	
TPG1,G2		VJR0646	TEST POINT	2	
VC1		ECV1ZW20X60	V.CAPACITOR 20P	1	
X1		VSX0373	CRYSTAL OSCILLATOR	1	
			MISCELLANEOUS		
		VGH0520	SLIDE SW SHEET	1	
		VGH2426	SLIDE SW SHEET	1	
		VML2143	CARD PULLER	1	
		VML2144	CARD PULLER	1	
		VMZ1548	BARRIER	1	
		VSC3058	SHIELD CASE	1	
		VSC3059	SHIELD CASE	1	
		VXA3967	P.C.B. SHIELD PLATE	1	
		XNG26E	NUT	1	
		XNG3ES	NUT	1	
		XSN3+6S	SCREW	1	
		XYNV3+K6FR	SCREW	1	
		XYN26+C10	SCREW	1	

Ref.No.		Part No.	Part Name & Description	Pcs	Remarks
	■	VEP86089C	P.C.BOARD W/COMPONENT		FOR AU-65H,AU-63H
			B2 TCG/TCR		AU-62H
BAT1,T2		VSB0010	BATTERY	2	
B2L		VJP2899B096	CONNECTOR(MALE)	1	
			CAPACITORS		
C1,C2		ECUM1H220JCN	C.CAPACITOR CH 50V 22P	2	
C3		ECUM1H103ZFN	C.CAPACITOR CH 50V 0.01U	1	
C4		ECQM1H104JF	P.CAPACITOR 50V 0.1U	1	
C5		ECEA1HU010	E.CAPACITOR 50V 1U	1	
C6-C9		ECUM1H103ZFN	C.CAPACITOR CH 50V 0.01U	4	
C10-17		ECUM1H103ZFN	C.CAPACITOR CH 50V 0.01U	8	
C18		ECUM1H390JCN	C.CAPACITOR CH 50V 39P	1	
C19		ECV1ZW30X53	V.CAPACITOR 30P	1	
C20		ECUM1H020CCN	C.CAPACITOR CH 50V 2P	1	
C21		ECUM1H330JCN	C.CAPACITOR CH 50V 33P	1	
C22		ECUM1H103ZFN	C.CAPACITOR CH 50V 0.01U	1	
C23		ECEA1HU2R2	E.CAPACITOR 50V 2.2U	1	
C24-31		ECUM1H103ZFN	C.CAPACITOR CH 50V 0.01U	8	
C32-34		ECUM1H150JCN	C.CAPACITOR CH 50V 15P	3	
C35		ECUM1H180JCN	C.CAPACITOR CH 50V 18P	1	
C36		ECUM1E104ZFN	C.CAPACITOR CH 25V 0.1U	1	
C37		ECEA1CU100	E.CAPACITOR 16V 10U	1	
C38-40		ECUM1H103ZFN	C.CAPACITOR CH 50V 0.01U	3	
C41		ECUM1H680JCN	C.CAPACITOR CH 50V 68P	1	
C42		ECUM1H681JCN	C.CAPACITOR CH 50V 680P	1	
C43		ECUM1H103ZFN	C.CAPACITOR CH 50V 0.01U	1	
C44		ECEA1EU100	E.CAPACITOR 25V 10U	1	
C45		ECUM1H103ZFN	C.CAPACITOR CH 50V 0.01U	1	
C46		ECEA1EU100	E.CAPACITOR 25V 10U	1	
C47		ECUM1H103ZFN	C.CAPACITOR CH 50V 0.01U	1	
C48		ECEA1EU100	E.CAPACITOR 25V 10U	1	
C49		ECUM1H103ZFN	C.CAPACITOR CH 50V 0.01U	1	
C50		ECEA1CU100	E.CAPACITOR 16V 10U	1	
C51		ECEA1HU010	E.CAPACITOR 50V 1U	1	
C52		ECUM1H150JCN	C.CAPACITOR CH 50V 15P	1	
C53,54		ECEA1CU100	E.CAPACITOR 16V 10U	2	
C55-58		ECUM1H103ZFN	C.CAPACITOR CH 50V 0.01U	4	
C59		ECUM1H181JCN	C.CAPACITOR CH 50V 180P	1	
C60,61		ECUM1H103ZFN	C.CAPACITOR CH 50V 0.01U	2	
C62		ECUM1H121JCN	C.CAPACITOR CH 50V 120P	1	
D1,D2		MA151K	DIODE	2	
D3,D4		HZ3ALL	DIODE	2	
D5		MA153	DIODE	1	
D6		MA3024	DIODE	1	
D7		MA153	DIODE	1	
D8,D9		MA151K	DIODE	2	
IC1		UPD78C10CW	IC	1	
IC2		TL7705CPSB	IC	1	
IC3		UPD71055GB	IC	1	
IC4		MB8421-90LPF	IC	1	
IC5		MC74HC373F	IC	1	
IC6		VSI0751	IC	1	
IC7		MC74HC138AF	IC	1	
IC8		UPD7503GFJ35	IC	1	
IC9		MC74HC374AF	IC	1	

Ref.No.		Part No.	Part Name & Description	Pcs	Remarks
IC10		MC74HC374AF	IC	1	
IC11		MN51040VPI	IC	1	
IC12,13		MC14052BF	IC	2	
IC14		MC14053BF	IC	1	(R)
IC15		UPC319G2	IC	1	
IC16		MC74HC08AF	IC	1	
IC17,18		MC74HC32AF	IC	2	
IC19		MC74HC04AF	IC	1	
IC20		SN74LS221NS	IC	1	
IC21		MC74HC74AF	IC	1	
IC6S		VJS2336A028	CONNECTOR (FEMALE)	1	
L1		VLQEL05S101J	COIL 100UH	1	
L2		VLP0017	COIL	1	
L3		VLQEL05S101J	COIL 100UH	1	
L4		VLQEL05S121J	COIL 120UH	1	
L5		VLQEL05S3R3J	COIL 3.3UH	1	
Q1		2SB709-R	TRANSISTOR CHIP	1	(Q,R)
Q2		2SD601-R	TRANSISTOR CHIP	1	(Q,R)
Q3		2SB709-R	TRANSISTOR CHIP	1	(Q,R)
Q4,Q5		2SD601-R	TRANSISTOR CHIP	2	(Q,R)
Q6,Q7		2SB710	TRANSISTOR	2	(Q,R)
Q8		2SB709-R	TRANSISTOR CHIP	1	(Q,R)
Q9		2SD601-R	TRANSISTOR CHIP	1	(Q,R)
			RESISTORS		
R1		ERJ6GEYJ683	M.RESISTOR CH 1/10W 68K	1	
R2		ERJ6GEYJ822	M.RESISTOR CH 1/10W 8.2K	1	
R3		ERJ6GEYJ473	M.RESISTOR CH 1/10W 47K	1	
R4-R6		ERJ6GEYJ103	M.RESISTOR CH 1/10W 10K	3	
R7		ERJ6GEYJ333	M.RESISTOR CH 1/10W 33K	1	
R8,R9		ERJ6GEYJ104	M.RESISTOR CH 1/10W 100K	2	
R10		ERJ6GEYG223	M.RESISTOR CH 1/10W 22K	1	
R11,12		ERJ6GEYJ103	M.RESISTOR CH 1/10W 10K	2	
R13		ERJ6GEYJ104	M.RESISTOR CH 1/10W 100K	1	
R14-18		ERJ6GEYJ103	M.RESISTOR CH 1/10W 10K	5	
R19-22		ERJ6GEYJ104	M.RESISTOR CH 1/10W 100K	4	
R23-25		ERJ6GEYJ154	M.RESISTOR CH 1/10W 150K	3	
R26		ERJ6GEYJ471	M.RESISTOR CH 1/10W 470	1	
R27		ERJ6GEYJ334	M.RESISTOR CH 1/10W 330K	1	
R28		ERJ6GEYG164	M.RESISTOR CH 1/10W 160K	1	
R29		ERJ6GEYJ273	M.RESISTOR CH 1/10W 27K	1	
R30		ERJ6GEYJ823	M.RESISTOR CH 1/10W 82K	1	
R31		ERJ6GEYJ153	M.RESISTOR CH 1/10W 15K	1	
R32		ERJ6GEYJ823	M.RESISTOR CH 1/10W 82K	1	
R33		ERJ6GEYG223	M.RESISTOR CH 1/10W 22K	1	
R34		ERJ6GEYJ103	M.RESISTOR CH 1/10W 10K	1	
R35		ERJ6GEYG223	M.RESISTOR CH 1/10W 22K	1	
R36		ERJ6GEYJ103	M.RESISTOR CH 1/10W 10K	1	
R37		ERJ6GEYJ123	M.RESISTOR CH 1/10W 12K	1	
R38		ERJ6GEYJ273	M.RESISTOR CH 1/10W 27K	1	
R39		ERJ6GEYG563	M.RESISTOR CH 1/10W 56K	1	
R40		ERJ6GEYJ561	M.RESISTOR CH 1/10W 560	1	
R41		ERJ6GEYJ472	M.RESISTOR CH 1/10W 4.7K	1	
R42		ERJ6GEYJ823	M.RESISTOR CH 1/10W 82K	1	
R43		ERJ6GEYG223	M.RESISTOR CH 1/10W 22K	1	
R44		ERJ6GEYJ103	M.RESISTOR CH 1/10W 10K	1	
R45,46		ERJ6GEYJ104	M.RESISTOR CH 1/10W 100K	2	
R48		ERJ6GEYJ102	M.RESISTOR CH 1/10W 1K	1	
R49		ERJ6GEYJ101	M.RESISTOR CH 1/10W 100	1	
R50		ERJ6GEYJ153	M.RESISTOR CH 1/10W 15K	1	
R51		ERJ6GEYJ102	M.RESISTOR CH 1/10W 1K	1	
R52		ERJ6GEYJ222	M.RESISTOR CH 1/10W 2.2K	1	
R53-61		ERJ6GEYJ104	M.RESISTOR CH 1/10W 100K	9	
R62		ERJ6GEYJ473	M.RESISTOR CH 1/10W 47K	1	
R63		ERJ6GEYJ104	M.RESISTOR CH 1/10W 100K	1	
R65		ERJ6GEYJ103	M.RESISTOR CH 1/10W 10K	1	
R66		ERJ6GEYJ104	M.RESISTOR CH 1/10W 100K	1	

Ref.No.		Part No.	Part Name & Description	Pcs	Remarks
R67		ERJ6GEYJ101	M.RESISTOR CH 1/10W 100	1	
R68		ERJ6GEYJ152	M.RESISTOR CH 1/10W 1.5K	1	
R69,70		ERJ6GEYJ682	M.RESISTOR CH 1/10W 6.8K	2	
R71,72		ERJ6GEYJ4R7	M.RESISTOR CH 1/10W 4.7	2	
R73		ERJ6GEYJ680	M.RESISTOR CH 1/10W 68	1	
R74		ERJ6GEYJ152	M.RESISTOR CH 1/10W 1.5K	1	
R75		ERJ6GEYJ394	M.RESISTOR CH 1/10W 390K	1	
R76		ERJ6GEYJ102	M.RESISTOR CH 1/10W 1K	1	
R77		ERJ6GEYJ104	M.RESISTOR CH 1/10W 100K	1	
R78		ERJ6GEYJ562	M.RESISTOR CH 1/10W 5.6K	1	
R79		ERJ6GEYJ122	M.RESISTOR CH 1/10W 1.2K	1	
R80		ERJ6GEYJ332	M.RESISTOR CH 1/10W 3.3K	1	
R81		ERJ6GEYJ104	M.RESISTOR CH 1/10W 100K	1	
R82		ERJ6GEYJ102	M.RESISTOR CH 1/10W 1K	1	
R83		ERJ6GEYJ562	M.RESISTOR CH 1/10W 5.6K	1	
R84		ERJ6GEYJ103	M.RESISTOR CH 1/10W 10K	1	
R85		ERJ6GEYJ683	M.RESISTOR CH 1/10W 68K	1	
R86		ERJ6GEYG563	M.RESISTOR CH 1/10W 56K	1	
R87,88		ERJ6GEYJ104	M.RESISTOR CH 1/10W 100K	2	
R89		ERJ6GEYJ103	M.RESISTOR CH 1/10W 10K	1	
R90		ERJ6GEYG273	M.RESISTOR CH 1/10W 27K	1	
R91		ERJ6GEYJ393	M.RESISTOR CH 1/10W 39K	1	
R92		ERJ6GEYJ104	M.RESISTOR CH 1/10W 100K	1	
SW1		VSS0223	SWITCH	1	
SW4,W5		VSS0223	SWITCH	2	
SW7		VSS0223	SWITCH	1	
TP1-P6		VJR0646	TEST POINT	6	
TPG1		VJR0646	TEST POINT	1	
X1		VSX0357	CRYSTAL OSCILLATOR	1	
X2		VSX0094	CRYSTAL OSCILLATOR	1	
X3		VSX0284	CRYSTAL OSCILLATOR	1	
X4		VSX0098	CRYSTAL OSCILLATOR	1	
			MISCELLANEOUS		
		VGH0520	SLIDE SW SHEET	1	
		VGH2380	SLIDE SW SHEET	1	
		VML2143	CARD PULLER	1	
		VML2144	CARD PULLER	1	
		VMZ1548	BARRIER	1	
		VXA3967	P.C.B. SHIELD PLATE	1	
		XNG26E	NUT	2	
		XNG3ES	NUT	2	
		XSN3+6S	SCREW	2	
		XYNV3+K6FR	SCREW	4	
		XYN26+C10	SCREW	2	

Ref.No.		Part No.	Part Name & Description	Pcs	Remarks
	■	VEP82062A	P.C.BOARD W/COMPONENT		FOR AU-63H
			AT POWER		
			CAPACITORS		
C1		ECEA1VU330	E.CAPACITOR 35V 33U	1	
C2		ECEA1EU221	E.CAPACITOR 25V 220U	1	
C3		ECEA1VU330	E.CAPACITOR 35V 33U	1	
C4		ECUM1H103ZFN	C.CAPACITOR CH 50V 0.01U	1	
C5		ECUM1H103KBN	C.CAPACITOR CH 50V 0.01U	1	
C6		ECUM1H102KBN	C.CAPACITOR CH 50V 1000P	1	
C7		ECUM1H103KBN	C.CAPACITOR CH 50V 0.01U	1	
C8,C9		ECWH10H103JR	C.CAPACITOR 50V 0.01U	2	
C10,11		ECWH10H103JR	C.CAPACITOR 50V 0.01U	2	
C12-19		ECQM1H183JF	P.CAPACITOR 50V 0.018U	8	
C20,21		ECCD2H331J	C.CAPACITOR 500V 330P	2	
C22-27		ECEA1VU330	E.CAPACITOR 35V 33U	6	
C28		ECEA1EU331	E.CAPACITOR 25V 330U	1	
C29		ECEA1CU100	E.CAPACITOR 16V 10U	1	
C30-33		ECUM1H103KBN	C.CAPACITOR CH 50V 0.01U	4	
CN350		VJP3079	CONNECTOR (MALE)	1	
D1,D2		10E1	DIODE	2	
D3		MA151K	DIODE	1	
D4,D5		RP1H	DIODE	2	
D6,D7		ERZC07DK361B	SURGE ABSORBER 360V	2	
IC1		UPC494G	IC	1	
IC2,C3		UPC4558G2	IC	2	
IC4,C5		VCR0111	IC	2	
L1		VLQ0128	COIL 47UH	1	
L2-L5		VLQEL05S101K	COIL 100UH	4	
P1		VJP1143	CONNECTOR(MALE)	1	
Q1		UN2213	TRANSISTOR-RESISTOR	1	
Q2		UN2113	TRANSISTOR-RESISTOR	1	
Q3		2SB709	TRANSISTOR CHIP	1	
Q4,Q5		2SK742	TRANSISTOR	2	
			RESISTORS		
R1		ERO50CHD1004	M.RESISTOR 1/2W 1M	1	
R2		ERJ6GEYG223	M.RESISTOR CH 1/10W 22K	1	
R3		ERJ6GEYJ103	M.RESISTOR CH 1/10W 10K	1	
R4		ERJ6GEYJ104	M.RESISTOR CH 1/10W 100K	1	
R5		ERJ6GEYJ103	M.RESISTOR CH 1/10W 10K	1	
R6		ERJ6GEYG682	M.REISITOR CH 1/10W 6.8K	1	
R7		ERJ6GEYG332	M.RESISTOR CH 1/10W 3.3K	1	
R8		ERJ6GEYG223	M.RESISTOR CH 1/10W 22K	1	
R9		ERJ6GEYJ222	M.RESISTOR CH 1/10W 2.2K	1	
R10		ERJ6GEYG822	M.RESISTOR CH 1/10W 8.2K	1	
R11		ERJ6GEYG202	M.RESISTOR CH 1/10W 2K	1	
R12,13		ERJ6GEYJ101	M.RESISTOR CH 1/10W 100	2	

Ref.No.		Part No.	Part Name & Description	Pcs	Remarks
R14,15		ERQ12AJ2R2P	F.RESISTOR 1/2W 2.2	2	
R16		ERJ6GEYG622	M.RESISTOR CH 1/10W 6.2K	1	
R17		ERJ6GEYG332	M.RESISTOR CH 1/10W 3.3K	1	
R18-21		ERO25CHD5103	M.RESISTOR 1/4W 510K	4	
R22		ERJ6GEYG123	M.RESISTOR CH 1/10W 12K	1	
R23,24		ERD25TJ474	C.RESISTOR 1/4W 470K	2	
R25		ERSB27G222	THERMISTOR 2.2K	1	
R26		ERJ6GEYG621	M.RESISTOR CH 1/10W 620	1	
R27		ERJ6GEYG272	M.RESISTOR CH 1/10W 2.7K	1	
R28-31		ERJ6GEYG133	M.RESISTOR CH 1/10W 13K	4	
R32		ERSB27G222	THERMISTOR 2.2K	1	
R33		ERJ6GEYG621	M.RESISTOR CH 1/10W 620	1	
R34		ERJ6GEYG272	M.RESISTOR CH 1/10W 2.7K	1	
R35-38		ERJ6GEYG133	M.RESISTOR CH 1/10W 13K	4	
R39		ERJ6GEYG153	M.RESISTOR CH 1/10W 15K	1	
R40		ERJ6GEYJ153	M.RESISTOR CH 1/10W 15K	1	
R41		ERO25CKF8253	M.RESISTOR 1/4W 825K	1	
R42		ERO25CKF6813	M.RESISTOR 1/4W 681K	1	
R43		ERJ6GEYJ473	M.RESISTOR CH 1/10W 47K	1	
R44		ERDS2TJ103	C.RESISTOR 1/4W 10K	1	
R45		ERJ6GEYG153	M.RESISTOR CH 1/10W 15K	1	
R46		ERJ6GEYJ153	M.RESISTOR CH 1/10W 15K	1	
R47		ERO25CKF8253	M.RESISTOR 1/4W 825K	1	
R48		ERO25CKF6813	M.RESISTOR 1/4W 681K	1	
R49		ERJ6GEYJ473	M.RESISTOR CH 1/10W 47K	1	
R50		ERDS2TJ103	C.RESISTOR 1/4W 10K	1	
R51		ERJ6GEYG682	M.REISITOR CH 1/10W 6.8K	1	
T1		VLT0537	TRANSFORMER	1	
TP1-P9		VJR0582	PACK PIN	9	
TP10		VJR0582	PACK PIN	1	
TPG1		VJR0582	PACK PIN	1	
VR1		VRV0109B504	V.RESISTOR 500K	1	
VR2,R3		VRV0109B503	V.RESISTOR 50K	2	
			MISCELLANEOUS		
		VMP2738	HOLDER ANGLE	1	
		VSC2298	SHIELD CASE	1	
		VSC2299	SHIELD CASE	1	
		VSC3407	SHIELD CASE	1	
		XTV3+6F	SCREW	2	
	■	VEP84103A	P.C.BOARD W/COMPONENT		FOR AU-65H
			AUDIO INPUT SW		
CN260		VJP3080	CONNECTOR (MALE)	1	
CN262		VJP3080	CONNECTOR (MALE)	1	
			RESISTORS		
R1-R4		EROS2CKG6200	M.RESISTOR 1/4W 620	4	
SW1,W2		VSS0304	SWITCH	2	

Ref.No.		Part No.	Part Name & Description	Pcs	Remarks
	■	VEP84094G	P.C.BOARD W/COMPONENT		FOR AU-65H
			AUDIO IN/OUT		
	■	VEP80573A	P.C.BOARD W/COMPONENT		ON VEP84095G
			AUDIO IN/OUT SUB		
			CAPACITORS		
C1		ECUM1H470JCN	C.CAPACITOR CH 50V 47P	1	
C2		ECUM1H473ZFN	C.CAPACITOR CH 50V 0.047U	1	
C5		ECUM1H470JCN	C.CAPACITOR CH 50V 47P	1	
C6		ECUM1H473ZFN	C.CAPACITOR CH 50V 0.047U	1	
C101		ECUM1H102JCN	C.CAPACITOR CH 50V 1000P	1	
C102,03		ECEA1CBZ100	E.CAPACITOR 16V 10U	2	
C104,05		ECUM1H330JCN	C.CAPACITOR CH 50V 33P	2	
C106		ECEA1CBZ470	E.CAPACITOR 16V 47U	1	
C107		ECEA1CPZ101	E.CAPACITOR 16V 100U	1	
C108,09		ECEA1CPZ301	E.CAPACITOR 16V 300U	2	
C115-18		ECEA1CPZ100	E.CAPACITOR 16V 10U	4	
C119		ECUM1H330JCN	C.CAPACITOR CH 50V 33P	1	
C201		ECUM1H102JCN	C.CAPACITOR CH 50V 1000P	1	
C202,03		ECEA1CBZ100	E.CAPACITOR 16V 10U	2	
C204,05		ECUM1H330JCN	C.CAPACITOR CH 50V 33P	2	
C206		ECEA1CBZ470	E.CAPACITOR 16V 47U	1	
C207		ECEA1CPZ101	E.CAPACITOR 16V 100U	1	
C208,09		ECEA1CPZ301	E.CAPACITOR 16V 300U	2	
C215-18		ECEA1CPZ100	E.CAPACITOR 16V 10U	4	
C219		ECUM1H330JCN	C.CAPACITOR CH 50V 33P	1	
C307		ECEA1CPZ101	E.CAPACITOR 16V 100U	1	
C308,09		ECEA1CPZ301	E.CAPACITOR 16V 300U	2	
C315-18		ECEA1CPZ100	E.CAPACITOR 16V 10U	4	
C407		ECEA1CPZ101	E.CAPACITOR 16V 100U	1	
C408,09		ECEA1CPZ301	E.CAPACITOR 16V 300U	2	
C415-18		ECEA1CPZ100	E.CAPACITOR 16V 10U	4	
C707		ECEA1CPZ101	E.CAPACITOR 16V 100U	1	
C708,09		ECEA1CPZ301	E.CAPACITOR 16V 300U	2	
C710		ECEA1CBZ100	E.CAPACITOR 16V 10U	1	
C714		ECEA1CBZ100	E.CAPACITOR 16V 10U	1	
C715-18		ECEA1CPZ100	E.CAPACITOR 16V 10U	4	
C801,02		ECEA1EN4R7S	E.CAPACITOR 25V 4.7U	2	
C804,05		ECEA1CPZ101	E.CAPACITOR 16V 100U	2	
C806		ECUM1E104ZFN	C.CAPACITOR CH 25V 0.1U	1	
C807,08		ECEA1CPZ101	E.CAPACITOR 16V 100U	2	
C809		ECUM1E104ZFN	C.CAPACITOR CH 25V 0.1U	1	
C810,11		ECEA1CPZ101	E.CAPACITOR 16V 100U	2	
C812		ECUM1H473ZFN	C.CAPACITOR CH 50V 0.047U	1	
C813,14		ECEA1CPZ101	E.CAPACITOR 16V 100U	2	
C815		ECUM1H473ZFN	C.CAPACITOR CH 50V 0.047U	1	
C816		ECEA1CU101	E.CAPACITOR 16V 100U	1	
C817,18		ECEA1CN330S	E.CAPACITOR 16V 33U	2	
C819		ECEA1VU470	E.CAPACITOR 35V 47U	1	
C820		ECEA1HU3R3	E.CAPACITOR 50V 3.3U	1	
C821		ECEA1VU470	E.CAPACITOR 35V 47U	1	
C822		ECEA1HU3R3	E.CAPACITOR 50V 3.3U	1	
C823		ECEA1CU101	E.CAPACITOR 16V 100U	1	
CN200		VJP3078	CONNECTOR (MALE)	1	
CN201		VJP1231T	CONNECTOR(MALE) 4P	1	
CN202		VJP1230T	CONNECTOR(MALE) 3P	1	
CN203		VJP3079	CONNECTOR (MALE)	1	
CN204		VJP1235T	CONNECTOR(MALE) 8P	1	
CN205,06		VJP1230T	CONNECTOR(MALE) 3P	2	
CN207		VJP3080	CONNECTOR (MALE)	1	
CN208		VJP1230G	CONNECTOR(MALE)	1	
CN211,12		VJP1230R	CONNECTOR(MALE) 3P	2	
CN213		VJP1233T	CONNECTOR(MALE) 6P	1	
CN215		VJP1230B	CONNECTOR(MALE)	1	
CN240		VJP1233G	CONNECTOR(MALE) 6P	1	

Ref.No.		Part No.	Part Name & Description	Pcs	Remarks
D1,D2		MA153	DIODE	2	
D101-04		MA3075M	DIODE	4	
D105		HZ2ALL	DIODE	1	
D106		MA153	DIODE	1	
D107,08		HZ2ALL	DIODE	2	
D109		MA153	DIODE	1	
D110		HZ2ALL	DIODE	1	
D201-04		MA3075M	DIODE	4	
D205		HZ2ALL	DIODE	1	
D206		MA153	DIODE	1	
D207,08		HZ2ALL	DIODE	2	
D209		MA153	DIODE	1	
D210		HZ2ALL	DIODE	1	
D305		HZ2ALL	DIODE	1	
D306		MA153	DIODE	1	
D307,08		HZ2ALL	DIODE	2	
D309		MA153	DIODE	1	
D310		HZ2ALL	DIODE	1	
D405		HZ2ALL	DIODE	1	
D406		MA153	DIODE	1	
D407,08		HZ2ALL	DIODE	2	
D409		MA153	DIODE	1	
D410		HZ2ALL	DIODE	1	
D705		HZ2ALL	DIODE	1	
D706		MA153	DIODE	1	
D707,08		HZ2ALL	DIODE	2	
D709		MA153	DIODE	1	
D710		HZ2ALL	DIODE	1	
D801		MA153	DIODE	1	
D802,03		MA151K	DIODE	2	
IC1		RC4556MB	IC	1	
IC101,02		RC2068MD	IC	2	
IC103		NJM4558M	IC	1	
IC105		VEP80573A	P.C.BOARD W/COMPONENT	1	
IC201		RC2068MD	IC	1	
IC205		VEP80573A	P.C.BOARD W/COMPONENT	1	
IC303		NJM4558M	IC	1	
IC305		VEP80573A	P.C.BOARD W/COMPONENT	1	
IC405		VEP80573A	P.C.BOARD W/COMPONENT	1	
IC703,04		NJM4558M	IC	2	
IC705		VEP80573A	P.C.BOARD W/COMPONENT	1	
IC802		NJM4558M	IC	1	
IC803		AN78N09	IC	1	
IC804		AN79N09	IC	1	
IC805		UPD4053BG	IC	1	
IC806		UPD4052BG	IC	1	
IC808		RC4560MD	IC	1	
P1		VJR0312	CONNECTOR (MALE)	1	
Q1-Q4		2SD1328-R	TRANSISTOR CHIP	4	(Q,R)
Q101		2SC1847-R	TRANSISTOR	1	(R)
Q102		2SA886-R	TRANSISTOR	1	
Q103		2SC1847-R	TRANSISTOR	1	(R)
Q104		2SA886-R	TRANSISTOR	1	
Q201		2SC1847-R	TRANSISTOR	1	(R)
Q202		2SA886-R	TRANSISTOR	1	
Q203		2SC1847-R	TRANSISTOR	1	(R)
Q204		2SA886-R	TRANSISTOR	1	
Q301		2SC1847-R	TRANSISTOR	1	(R)
Q302		2SA886-R	TRANSISTOR	1	
Q303		2SC1847-R	TRANSISTOR	1	(R)
Q304		2SA886-R	TRANSISTOR	1	
Q401		2SC1847-R	TRANSISTOR	1	(R)
Q402		2SA886-R	TRANSISTOR	1	

Ref.No.		Part No.	Part Name & Description	Pcs	Remarks
Q403		2SC1847-R	TRANSISTOR	1	(R)
Q404		2SA886-R	TRANSISTOR	1	
Q701		2SC1847-R	TRANSISTOR	1	(R)
Q702		2SA886-R	TRANSISTOR	1	
Q703		2SC1847-R	TRANSISTOR	1	(R)
Q704		2SA886-R	TRANSISTOR	1	
Q801		2SD602	TRANSISTOR	1	(Q,R)
Q802		2SB710	TRANSISTOR	1	(Q,R)
Q803,04		UN2213	TRANSISTOR-RESISTOR	2	
Q805		UN2114	TRANSISTOR-RESISTOR	1	
Q806		UN2213	TRANSISTOR-RESISTOR	1	
Q807		UN2114	TRANSISTOR-RESISTOR	1	
			RESISTORS		
R1-R3		VRE0034E472	M.RESISTOR CH 1/10W 4.7K	3	
R4		ERJ6GEYJ105	M.RESISTOR CH 1/10W 1M	1	
R5		VRE0034E153	M.RESISTOR CH 1/10W 15K	1	
R6		ERJ6GEYJ221	M.RESISTOR CH 1/10W 220	1	
R7,R8		ERJ6GEYJ103	M.RESISTOR CH 1/10W 10K	2	
R9		ERJ6GEYJ473	M.RESISTOR CH 1/10W 47K	1	
R10		ERJ6GEYJ473	M.RESISTOR CH 1/10W 47K	1	
R11,12		VRE0034E153	M.RESISTOR CH 1/10W 15K	2	
R13,14		VRE0034E472	M.RESISTOR CH 1/10W 4.7K	2	
R15		ERJ6GEYJ105	M.RESISTOR CH 1/10W 1M	1	
R16		VRE0034E153	M.RESISTOR CH 1/10W 15K	1	
R17		ERJ6GEYJ221	M.RESISTOR CH 1/10W 220	1	
R18,19		ERJ6GEYJ103	M.RESISTOR CH 1/10W 10K	2	
R20,21		ERJ6GEYJ473	M.RESISTOR CH 1/10W 47K	2	
R101,02		ERJ6GEYJ752	M.RESISTOR CH 1/10W 7.5K	2	
R103		ERJ6GEYJ391	M.RESISTOR CH 1/10W 390	1	
R104		ERJ6GEYJ621	M.RESISTOR CH 1/10W 620	1	
R105		ERJ6GEYJ122	M.RESISTOR CH 1/10W 1.2K	1	
R106		ERJ6GEYJ471	M.RESISTOR CH 1/10W 470	1	
R108,09		ERJ6GEYJ104	M.RESISTOR CH 1/10W 100K	2	
R110		VRE0034E472	M.RESISTOR CH 1/10W 4.7K	1	
R111		VRE0034E332	M.RESISTOR CH 1/10W 3.3K	1	
R112		VRE0034E222	M.RESISTOR CH 1/10W 2.2K	1	
R113		VRE0034E332	M.RESISTOR CH 1/10W 3.3K	1	
R114-16		VRE0034E472	M.RESISTOR CH 1/10W 4.7K	3	
R118		ERJ6GEYG223	M.RESISTOR CH 1/10W 22K	1	
R119		ERJ6GEYG301	M.RESISTOR CH 1/10W 300	1	
R120		ERJ6GEYG152	M.RESISTOR CH 1/10W 1.5K	1	
R121		ERJ6GEYG332	M.RESISTOR CH 1/10W 3.3K	1	
R122		ERJ6GEYG821	M.RESISTOR CH 1/10W 820	1	
R123		ERJ6GEYG563	M.RESISTOR CH 1/10W 56K	1	
R124		ERJ6GEYG562	M.RESISTOR CH 1/10W 5.6K	1	
R125		ERJ6GEYG222	M.RESISTOR CH 1/10W 2.2K	1	
R126		ERJ6GEYJ681	M.RESISTOR CH 1/10W 680	1	
R127		ERJ6GEYJ122	M.RESISTOR CH 1/10W 1.2K	1	
R128,29		ERG12SJ220	M.RESISTOR 1/2W 22	2	
R130		ERX12SJ4R7	M.RESISTOR 1/2W 4.7	1	
R131		ERJ6GEYJ103	M.RESISTOR CH 1/10W 10K	1	
R132		VRE0034E151	M.RESISTOR CH 1/10W 150	1	
R133		VRE0034E330	M.RESISTOR CH 1/10W 33	1	
R134		ERJ6GEYJ103	M.RESISTOR CH 1/10W 10K	1	
R135,36		ERG12SJ220	M.RESISTOR 1/2W 22	2	
R137		ERX12SJ4R7	M.RESISTOR 1/2W 4.7	1	
R201,02		ERJ6GEYJ752	M.RESISTOR CH 1/10W 7.5K	2	
R203		ERJ6GEYJ391	M.RESISTOR CH 1/10W 390	1	
R204		ERJ6GEYJ621	M.RESISTOR CH 1/10W 620	1	
R205		ERJ6GEYJ122	M.RESISTOR CH 1/10W 1.2K	1	
R206		ERJ6GEYJ471	M.RESISTOR CH 1/10W 470	1	
R208,09		ERJ6GEYJ104	M.RESISTOR CH 1/10W 100K	2	
R210		VRE0034E472	M.RESISTOR CH 1/10W 4.7K	1	
R211		VRE0034E332	M.RESISTOR CH 1/10W 3.3K	1	
R212		VRE0034E222	M.RESISTOR CH 1/10W 2.2K	1	
R213		VRE0034E332	M.RESISTOR CH 1/10W 3.3K	1	
R214-16		VRE0034E472	M.RESISTOR CH 1/10W 4.7K	3	
R218		ERJ6GEYG223	M.RESISTOR CH 1/10W 22K	1	
R219		ERJ6GEYG301	M.RESISTOR CH 1/10W 300	1	
R220		ERJ6GEYG152	M.RESISTOR CH 1/10W 1.5K	1	
R221		ERJ6GEYG332	M.RESISTOR CH 1/10W 3.3K	1	
R222		ERJ6GEYG821	M.RESISTOR CH 1/10W 820	1	

Ref.No.		Part No.	Part Name & Description	Pcs	Remarks
R223		ERJ6GEYG563	M.RESISTOR CH 1/10W 56K	1	
R224		ERJ6GEYG562	M.RESISTOR CH 1/10W 5.6K	1	
R225		ERJ6GEYG222	M.RESISTOR CH 1/10W 2.2K	1	
R226		ERJ6GEYJ681	M.RESISTOR CH 1/10W 680	1	
R227		ERJ6GEYJ122	M.RESISTOR CH 1/10W 1.2K	1	
R228,29		ERG12SJ220	M.RESISTOR 1/2W 22	2	
R230		ERX12SJ4R7	M.RESISTOR 1/2W 4.7	1	
R231		ERJ6GEYJ103	M.RESISTOR CH 1/10W 10K	1	
R232		VRE0034E151	M.RESISTOR CH 1/10W 150	1	
R233		VRE0034E330	M.RESISTOR CH 1/10W 33	1	
R234		ERJ6GEYJ103	M.RESISTOR CH 1/10W 10K	1	
R235,36		ERG12SJ220	M.RESISTOR 1/2W 22	2	
R237		ERX12SJ4R7	M.RESISTOR 1/2W 4.7	1	
R319		ERJ6GEYG301	M.RESISTOR CH 1/10W 300	1	
R320		ERJ6GEYG152	M.RESISTOR CH 1/10W 1.5K	1	
R321		ERJ6GEYG332	M.RESISTOR CH 1/10W 3.3K	1	
R322		ERJ6GEYG821	M.RESISTOR CH 1/10W 820	1	
R323		ERJ6GEYG563	M.RESISTOR CH 1/10W 56K	1	
R324		ERJ6GEYG562	M.RESISTOR CH 1/10W 5.6K	1	
R325		ERJ6GEYG222	M.RESISTOR CH 1/10W 2.2K	1	
R326		ERJ6GEYJ681	M.RESISTOR CH 1/10W 680	1	
R327		ERJ6GEYJ122	M.RESISTOR CH 1/10W 1.2K	1	
R328,29		ERG12SJ220	M.RESISTOR 1/2W 22	2	
R330		ERX12SJ4R7	M.RESISTOR 1/2W 4.7	1	
R331		ERJ6GEYJ103	M.RESISTOR CH 1/10W 10K	1	
R332		VRE0034E151	M.RESISTOR CH 1/10W 150	1	
R333		VRE0034E330	M.RESISTOR CH 1/10W 33	1	
R334		ERJ6GEYJ103	M.RESISTOR CH 1/10W 10K	1	
R335,36		ERG12SJ220	M.RESISTOR 1/2W 22	2	
R337		ERX12SJ4R7	M.RESISTOR 1/2W 4.7	1	
R419		ERJ6GEYG301	M.RESISTOR CH 1/10W 300	1	
R420		ERJ6GEYG152	M.RESISTOR CH 1/10W 1.5K	1	
R421		ERJ6GEYG332	M.RESISTOR CH 1/10W 3.3K	1	
R422		ERJ6GEYG821	M.RESISTOR CH 1/10W 820	1	
R423		ERJ6GEYG563	M.RESISTOR CH 1/10W 56K	1	
R424		ERJ6GEYG562	M.RESISTOR CH 1/10W 5.6K	1	
R425		ERJ6GEYG222	M.RESISTOR CH 1/10W 2.2K	1	
R426		ERJ6GEYJ681	M.RESISTOR CH 1/10W 680	1	
R427		ERJ6GEYJ122	M.RESISTOR CH 1/10W 1.2K	1	
R428,29		ERG12SJ220	M.RESISTOR 1/2W 22	2	
R430		ERX12SJ4R7	M.RESISTOR 1/2W 4.7	1	
R431		ERJ6GEYJ103	M.RESISTOR CH 1/10W 10K	1	
R432		VRE0034E151	M.RESISTOR CH 1/10W 150	1	
R433		VRE0034E330	M.RESISTOR CH 1/10W 33	1	
R434		ERJ6GEYJ103	M.RESISTOR CH 1/10W 10K	1	
R435,36		ERG12SJ220	M.RESISTOR 1/2W 22	2	
R437		ERX12SJ4R7	M.RESISTOR 1/2W 4.7	1	
R726		ERJ6GEYJ102	M.RESISTOR CH 1/10W 1K	1	
R727		ERJ6GEY0R00	M.RESISTOR CH 1/10W 0	1	
R728,29		ERG12SJ220	M.RESISTOR 1/2W 22	2	
R730		ERX12SJ4R7	M.RESISTOR 1/2W 4.7	1	
R731		ERJ6GEYJ103	M.RESISTOR CH 1/10W 10K	1	
R732		VRE0034E151	M.RESISTOR CH 1/10W 150	1	
R733		VRE0034E330	M.RESISTOR CH 1/10W 33	1	
R734		ERJ6GEYJ103	M.RESISTOR CH 1/10W 10K	1	
R735,36		ERG12SJ220	M.RESISTOR 1/2W 22	2	
R737		ERX12SJ4R7	M.RESISTOR 1/2W 4.7	1	
R739		ERJ6GEYJ103	M.RESISTOR CH 1/10W 10K	1	
R741		ERJ6GEYJ103	M.RESISTOR CH 1/10W 10K	1	
R801		ERJ6GEY0R00	M.RESISTOR CH 1/10W 0	1	
R802,03		ERJ6GEYJ104	M.RESISTOR CH 1/10W 100K	2	
R809		ERJ6GEYJ153	M.RESISTOR CH 1/10W 15K	1	
R810		ERJ6GEYJ473	M.RESISTOR CH 1/10W 47K	1	
R811-13		ERJ6GEYG223	M.RESISTOR CH 1/10W 22K	3	
R814,15		ERJ6GEYJ331	M.RESISTOR CH 1/10W 330	2	
R816		ERJ6GEYJ101	M.RESISTOR CH 1/10W 100	1	
R817		ERJ6GEYJ682	M.RESISTOR CH 1/10W 6.8K	1	
R818		ERJ6GEYJ101	M.RESISTOR CH 1/10W 100	1	
R819		ERJ6GEYJ332	M.RESISTOR CH 1/10W 3.3K	1	
R820		ERJ6GEYJ682	M.RESISTOR CH 1/10W 6.8K	1	
R821		ERJ6GEYJ470	M.RESISTOR CH 1/10W 47	1	
R822,23		ERJ6GEYJ822	M.RESISTOR CH 1/10W 8.2K	2	
R824		ERJ6GEYJ470	M.RESISTOR CH 1/10W 47	1	
R825		ERJ6GEYJ362	M.RESISTOR CH 1/10W 3.6K	1	
R826,27		ERJ6GEYJ103	M.RESISTOR CH 1/10W 10K	2	

Ref.No.		Part No.	Part Name & Description	Pcs	Remarks
R828		ERG1SJ220	M.RESISTOR 1W 22	1	
R829		ERJ6GEYJ104	M.RESISTOR CH 1/10W 100K	1	
R830,31		ERJ6GEYJ103	M.RESISTOR CH 1/10W 10K	2	
R832		ERG1SJ220	M.RESISTOR 1W 22	1	
R833		ERJ6GEYOROO	M.RESISTOR CH 1/10W 0	1	
SW101,02		VSS0182	SWITCH	2	
SW301,02		VSS0182	SWITCH	2	
	■	VEP84094C	P.C.BOARD W/COMPONENT		FOR AU-63H,AU-62H
			AUDIO IN/OUT		
	■	VEP80573A	P.C.BOARD W/COMPONENT		ON VEP84094C
			AUDIO IN/OUT SUB		
			CAPACITORS		
C1		ECUM1H470JCN	C.CAPACITOR CH 50V 47P	1	
C2		ECUM1H473ZFN	C.CAPACITOR CH 50V 0.047U	1	
C5		ECUM1H470JCN	C.CAPACITOR CH 50V 47P	1	
C6		ECUM1H473ZFN	C.CAPACITOR CH 50V 0.047U	1	
C107		ECEA1CPZ101	E.CAPACITOR 16V 100U	1	
C108,09		ECEA1CPZ301	E.CAPACITOR 16V 300U	2	
C115-18		ECEA1CPZ100	E.CAPACITOR 16V 10U	4	
C207		ECEA1CPZ101	E.CAPACITOR 16V 100U	1	
C208,09		ECEA1CPZ301	E.CAPACITOR 16V 300U	2	
C215-18		ECEA1CPZ100	E.CAPACITOR 16V 10U	4	
C307		ECEA1CPZ101	E.CAPACITOR 16V 100U	1	
C308,09		ECEA1CPZ301	E.CAPACITOR 16V 300U	2	
C315-18		ECEA1CPZ100	E.CAPACITOR 16V 10U	4	
C407		ECEA1CPZ101	E.CAPACITOR 16V 100U	1	
C408,09		ECEA1CPZ301	E.CAPACITOR 16V 300U	2	
C415-18		ECEA1CPZ100	E.CAPACITOR 16V 10U	4	
C707		ECEA1CPZ101	E.CAPACITOR 16V 100U	1	
C708,09		ECEA1CPZ301	E.CAPACITOR 16V 300U	2	
C710		ECEA1CBZ100	E.CAPACITOR 16V 10U	1	
C714		ECEA1CBZ100	E.CAPACITOR 16V 10U	1	
C715-18		ECEA1CPZ100	E.CAPACITOR 16V 10U	4	
C804,05		ECEA1CPZ101	E.CAPACITOR 16V 100U	2	
C806		ECUM1E104ZFN	C.CAPACITOR CH 25V 0.1U	1	
C807,08		ECEA1CPZ101	E.CAPACITOR 16V 100U	2	
C809		ECUM1E104ZFN	C.CAPACITOR CH 25V 0.1U	1	
C810,11		ECEA1CPZ101	E.CAPACITOR 16V 100U	2	
C812		ECUM1H473ZFN	C.CAPACITOR CH 50V 0.047U	1	
C813,14		ECEA1CPZ101	E.CAPACITOR 16V 100U	2	
C815		ECUM1H473ZFN	C.CAPACITOR CH 50V 0.047U	1	
C816		ECEA1CU101	E.CAPACITOR 16V 100U	1	
C817,18		ECEA1CN330S	E.CAPACITOR 16V 33U	2	
C819		ECEA1VU470	E.CAPACITOR 35V 47U	1	
C820		ECEA1HU3R3	E.CAPACITOR 50V 3.3U	1	
C821		ECEA1VU470	E.CAPACITOR 35V 47U	1	
C822		ECEA1HU3R3	E.CAPACITOR 50V 3.3U	1	
C823		ECEA1CU101	E.CAPACITOR 16V 100U	1	
CN200		VJP3078	CONNECTOR (MALE)	1	
CN201		VJP1231T	CONNECTOR(MALE) 4P	1	
CN202		VJP1230T	CONNECTOR(MALE) 3P	1	
CN203		VJP3079	CONNECTOR (MALE)	1	
CN205,06		VJP1230T	CONNECTOR(MALE) 3P	2	
CN207		VJP3080	CONNECTOR (MALE)	1	
CN211,12		VJP1230R	CONNECTOR(MALE) 3P	2	
CN215		VJP1230B	CONNECTOR(MALE)	1	

Ref.No.		Part No.	Part Name & Description	Pcs	Remarks
D1,D2		MA153	DIODE	2	
D105		HZ2ALL	DIODE	1	
D106		MA153	DIODE	1	
D107,08		HZ2ALL	DIODE	2	
D109		MA153	DIODE	1	
D110		HZ2ALL	DIODE	1	
D205		HZ2ALL	DIODE	1	
D206		MA153	DIODE	1	
D207,08		HZ2ALL	DIODE	2	
D209		MA153	DIODE	1	
D210		HZ2ALL	DIODE	1	
D305		HZ2ALL	DIODE	1	
D306		MA153	DIODE	1	
D307,08		HZ2ALL	DIODE	2	
D309		MA153	DIODE	1	
D310		HZ2ALL	DIODE	1	
D405		HZ2ALL	DIODE	1	
D406		MA153	DIODE	1	
D407,08		HZ2ALL	DIODE	2	
D409		MA153	DIODE	1	
D410		HZ2ALL	DIODE	1	
D705		HZ2ALL	DIODE	1	
D706		MA153	DIODE	1	
D707,08		HZ2ALL	DIODE	2	
D709		MA153	DIODE	1	
D710		HZ2ALL	DIODE	1	
D802,03		MA151K	DIODE	2	
IC1		RC4556MB	IC	1	
IC103		NJM4558M	IC	1	
IC105		VEP80573A	P.C.BOARD W/COMPONENT	1	
IC205		VEP80573A	P.C.BOARD W/COMPONENT	1	
IC303		NJM4558M	IC	1	
IC305		VEP80573A	P.C.BOARD W/COMPONENT	1	
IC405		VEP80573A	P.C.BOARD W/COMPONENT	1	
IC703,04		NJM4558M	IC	2	
IC705		VEP80573A	P.C.BOARD W/COMPONENT	1	
IC803		AN78N09	IC	1	
IC804		AN79N09	IC	1	
IC805		UPD4053BG	IC	1	
IC806		UPD4052BG	IC	1	
IC808		RC4560MD	IC	1	
P1		VJR0312	CONNECTOR (MALE)	1	
Q1-Q4		2SD1328-R	TRANSISTOR CHIP	4	(Q,R)
Q101		2SC1847-R	TRANSISTOR	1	(R)
Q102		2SA886-R	TRANSISTOR	1	
Q103		2SC1847-R	TRANSISTOR	1	(R)
Q104		2SA886-R	TRANSISTOR	1	
Q201		2SC1847-R	TRANSISTOR	1	(R)
Q202		2SA886-R	TRANSISTOR	1	
Q203		2SC1847-R	TRANSISTOR	1	(R)
Q204		2SA886-R	TRANSISTOR	1	
Q301		2SC1847-R	TRANSISTOR	1	(R)
Q302		2SA886-R	TRANSISTOR	1	
Q303		2SC1847-R	TRANSISTOR	1	(R)
Q304		2SA886-R	TRANSISTOR	1	
Q401		2SC1847-R	TRANSISTOR	1	(R)
Q402		2SA886-R	TRANSISTOR	1	
Q403		2SC1847-R	TRANSISTOR	1	(R)
Q404		2SA886-R	TRANSISTOR	1	
Q701		2SC1847-R	TRANSISTOR	1	(R)
Q702		2SA886-R	TRANSISTOR	1	
Q703		2SC1847-R	TRANSISTOR	1	(R)
Q704		2SA886-R	TRANSISTOR	1	
Q801		2SD602	TRANSISTOR	1	(Q,R)
Q802		2SB710	TRANSISTOR	1	(Q,R)
Q803,04		UN2213	TRANSISTOR-RESISTOR	2	

Ref.No.		Part No.	Part Name & Description	Pcs	Remarks
Q805		UN2114	TRANSISTOR-RESISTOR	1	
Q806		UN2213	TRANSISTOR-RESISTOR	1	
Q807		UN2114	TRANSISTOR-RESISTOR	1	
			RESISTORS		
R1-R3		VRE0034E472	M.RESISTOR CH 1/10W 4.7K	3	
R4		ERJ6GEYJ105	M.RESISTOR CH 1/10W 1M	1	
R5		VRE0034E153	M.RESISTOR CH 1/10W 15K	1	
R6		ERJ6GEYJ221	M.RESISTOR CH 1/10W 220	1	
R7,R8		ERJ6GEYJ103	M.RESISTOR CH 1/10W 10K	2	
R9		ERJ6GEYJ473	M.RESISTOR CH 1/10W 47K	1	
R10		ERJ6GEYJ473	M.RESISTOR CH 1/10W 47K	1	
R11,12		VRE0034E153	M.RESISTOR CH 1/10W 15K	2	
R13,14		VRE0034E472	M.RESISTOR CH 1/10W 4.7K	2	
R15		ERJ6GEYJ105	M.RESISTOR CH 1/10W 1M	1	
R16		VRE0034E153	M.RESISTOR CH 1/10W 15K	1	
R17		ERJ6GEYJ221	M.RESISTOR CH 1/10W 220	1	
R18,19		ERJ6GEYJ103	M.RESISTOR CH 1/10W 10K	2	
R20,21		ERJ6GEYJ473	M.RESISTOR CH 1/10W 47K	2	
R119		ERJ6GEYG301	M.RESISTOR CH 1/10W 300	1	
R120		ERJ6GEYG152	M.RESISTOR CH 1/10W 1.5K	1	
R121		ERJ6GEYG332	M.RESISTOR CH 1/10W 3.3K	1	
R122		ERJ6GEYG821	M.RESISTOR CH 1/10W 820	1	
R123		ERJ6GEYG563	M.RESISTOR CH 1/10W 56K	1	
R124		ERJ6GEYG562	M.RESISTOR CH 1/10W 5.6K	1	
R125		ERJ6GEYG222	M.RESISTOR CH 1/10W 2.2K	1	
R126		ERJ6GEYJ681	M.RESISTOR CH 1/10W 680	1	
R127		ERJ6GEYJ122	M.RESISTOR CH 1/10W 1.2K	1	
R128,29		ERG12SJ220	M.RESISTOR 1/2W 22	2	
R130		ERX12SJ4R7	M.RESISTOR 1/2W 4.7	1	
R131		ERJ6GEYJ103	M.RESISTOR CH 1/10W 10K	1	
R132		VRE0034E151	M.RESISTOR CH 1/10W 150	1	
R133		VRE0034E330	M.RESISTOR CH 1/10W 33	1	
R134		ERJ6GEYJ103	M.RESISTOR CH 1/10W 10K	1	
R135,36		ERG12SJ220	M.RESISTOR 1/2W 22	2	
R137		ERX12SJ4R7	M.RESISTOR 1/2W 4.7	1	
R219		ERJ6GEYG301	M.RESISTOR CH 1/10W 300	1	
R220		ERJ6GEYG152	M.RESISTOR CH 1/10W 1.5K	1	
R221		ERJ6GEYG332	M.RESISTOR CH 1/10W 3.3K	1	
R222		ERJ6GEYG821	M.RESISTOR CH 1/10W 820	1	
R223		ERJ6GEYG563	M.RESISTOR CH 1/10W 56K	1	
R224		ERJ6GEYG562	M.RESISTOR CH 1/10W 5.6K	1	
R225		ERJ6GEYG222	M.RESISTOR CH 1/10W 2.2K	1	
R226		ERJ6GEYJ681	M.RESISTOR CH 1/10W 680	1	
R227		ERJ6GEYJ122	M.RESISTOR CH 1/10W 1.2K	1	
R228,29		ERG12SJ220	M.RESISTOR 1/2W 22	2	
R230		ERX12SJ4R7	M.RESISTOR 1/2W 4.7	1	
R231		ERJ6GEYJ103	M.RESISTOR CH 1/10W 10K	1	
R232		VRE0034E151	M.RESISTOR CH 1/10W 150	1	
R233		VRE0034E330	M.RESISTOR CH 1/10W 33	1	
R234		ERJ6GEYJ103	M.RESISTOR CH 1/10W 10K	1	
R235,36		ERG12SJ220	M.RESISTOR 1/2W 22	2	
R237		ERX12SJ4R7	M.RESISTOR 1/2W 4.7	1	
R319		ERJ6GEYG301	M.RESISTOR CH 1/10W 300	1	
R320		ERJ6GEYG152	M.RESISTOR CH 1/10W 1.5K	1	
R321		ERJ6GEYG332	M.RESISTOR CH 1/10W 3.3K	1	
R322		ERJ6GEYG821	M.RESISTOR CH 1/10W 820	1	
R323		ERJ6GEYG563	M.RESISTOR CH 1/10W 56K	1	
R324		ERJ6GEYG562	M.RESISTOR CH 1/10W 5.6K	1	
R325		ERJ6GEYG222	M.RESISTOR CH 1/10W 2.2K	1	
R326		ERJ6GEYJ681	M.RESISTOR CH 1/10W 680	1	
R327		ERJ6GEYJ122	M.RESISTOR CH 1/10W 1.2K	1	
R328,29		ERG12SJ220	M.RESISTOR 1/2W 22	2	
R330		ERX12SJ4R7	M.RESISTOR 1/2W 4.7	1	
R331		ERJ6GEYJ103	M.RESISTOR CH 1/10W 10K	1	
R332		VRE0034E151	M.RESISTOR CH 1/10W 150	1	
R333		VRE0034E330	M.RESISTOR CH 1/10W 33	1	
R334		ERJ6GEYJ103	M.RESISTOR CH 1/10W 10K	1	
R335,36		ERG12SJ220	M.RESISTOR 1/2W 22	2	
R337		ERX12SJ4R7	M.RESISTOR 1/2W 4.7	1	
R419		ERJ6GEYG301	M.RESISTOR CH 1/10W 300	1	
R420		ERJ6GEYG152	M.RESISTOR CH 1/10W 1.5K	1	
R421		ERJ6GEYG332	M.RESISTOR CH 1/10W 3.3K	1	

Ref.No.		Part No.	Part Name & Description	Pcs	Remarks
R422		ERJ6GEYG821	M.RESISTOR CH 1/10W 820	1	
R423		ERJ6GEYG563	M.RESISTOR CH 1/10W 56K	1	
R424		ERJ6GEYG562	M.RESISTOR CH 1/10W 5.6K	1	
R425		ERJ6GEYG222	M.RESISTOR CH 1/10W 2.2K	1	
R426		ERJ6GEYJ681	M.RESISTOR CH 1/10W 680	1	
R427		ERJ6GEYJ122	M.RESISTOR CH 1/10W 1.2K	1	
R428,29		ERG12SJ220	M.RESISTOR 1/2W 22	2	
R430		ERX12SJ4R7	M.RESISTOR 1/2W 4.7	1	
R431		ERJ6GEYJ103	M.RESISTOR CH 1/10W 10K	1	
R432		VRE0034E151	M.RESISTOR CH 1/10W 150	1	
R433		VRE0034E330	M.RESISTOR CH 1/10W 33	1	
R434		ERJ6GEYJ103	M.RESISTOR CH 1/10W 10K	1	
R435,36		ERG12SJ220	M.RESISTOR 1/2W 22	2	
R437		ERX12SJ4R7	M.RESISTOR 1/2W 4.7	1	
R726		ERJ6GEYJ102	M.RESISTOR CH 1/10W 1K	1	
R727		ERJ6GEY0R00	M.RESISTOR CH 1/10W 0	1	
R728,29		ERG12SJ220	M.RESISTOR 1/2W 22	2	
R730		ERX12SJ4R7	M.RESISTOR 1/2W 4.7	1	
R731		ERJ6GEYJ103	M.RESISTOR CH 1/10W 10K	1	
R732		VRE0034E151	M.RESISTOR CH 1/10W 150	1	
R733		VRE0034E330	M.RESISTOR CH 1/10W 33	1	
R734		ERJ6GEYJ103	M.RESISTOR CH 1/10W 10K	1	
R735,36		ERG12SJ220	M.RESISTOR 1/2W 22	2	
R737		ERX12SJ4R7	M.RESISTOR 1/2W 4.7	1	
R739		ERJ6GEYJ103	M.RESISTOR CH 1/10W 10K	1	
R741		ERJ6GEYJ103	M.RESISTOR CH 1/10W 10K	1	
R811-13		ERJ6GEYG223	M.RESISTOR CH 1/10W 22K	3	
R814,15		ERJ6GEYJ331	M.RESISTOR CH 1/10W 330	2	
R816		ERJ6GEYJ101	M.RESISTOR CH 1/10W 100	1	
R817		ERJ6GEYJ682	M.RESISTOR CH 1/10W 6.8K	1	
R818		ERJ6GEYJ101	M.RESISTOR CH 1/10W 100	1	
R819		ERJ6GEYJ332	M.RESISTOR CH 1/10W 3.3K	1	
R820		ERJ6GEYJ682	M.RESISTOR CH 1/10W 6.8K	1	
R821		ERJ6GEYJ470	M.RESISTOR CH 1/10W 47	1	
R822,23		ERJ6GEYJ822	M.RESISTOR CH 1/10W 8.2K	2	
R824		ERJ6GEYJ470	M.RESISTOR CH 1/10W 47	1	
R825		ERJ6GEYJ362	M.RESISTOR CH 1/10W 3.6K	1	
R826,27		ERJ6GEYJ103	M.RESISTOR CH 1/10W 10K	2	
R828		ERG1SJ220	M.RESISTOR 1W 22	1	
R829		ERJ6GEYJ104	M.RESISTOR CH 1/10W 100K	1	
R830,31		ERJ6GEYJ103	M.RESISTOR CH 1/10W 10K	2	
R832		ERG1SJ220	M.RESISTOR 1W 22	1	
R833		ERJ6GEY0R00	M.RESISTOR CH 1/10W 0	1	
SW102		VSS0182	SWITCH	1	
SW302		VSS0182	SWITCH	1	
	■	VEP84102A	P.C.BOARD W/COMPONENT		FOR AU-65H
			AUDIO VR		
			CAPACITORS		
C1-C8		ECEA1CN100S	E.CAPACITOR 16V 10U	8	
C9		ECEA1CU101	E.CAPACITOR 16V 100U	1	
C10-12		ECEA1CU101	E.CAPACITOR 16V 100U	3	
C13,14		ECEA1CN100S	E.CAPACITOR 16V 10U	2	
CN161		VJP1231T	CONNECTOR(MALE) 4P	1	
CN163		VJP3082	CONNECTOR (MALE)	1	
CN164,65		VJP3078	CONNECTOR (MALE)	2	
CN166		VJP1231R	CONNECTOR(MALE) 4P	1	
CN167		VJP1236T	CONNECTOR(MALE) 9P	1	

Ref.No.		Part No.	Part Name & Description	Pcs	Remarks
CN168		VJP1235T	CONNECTOR(MALE) 8P	1	
IC1-C4		NJM4558M	IC	4	
IC5		AN78N09	IC	1	
IC6		AN79N09	IC	1	
IC7		MC14053BF	IC	1	
IC8,C9		NJM4558M	IC	2	
			RESISTORS		
R1		ERJ6GEYJ103	M.RESISTOR CH 1/10W 10K	1	
R2		ERJ6GEYJ102	M.RESISTOR CH 1/10W 1K	1	
R3		ERJ6GEYJ104	M.RESISTOR CH 1/10W 100K	1	
R4		ERJ6GEYJ102	M.RESISTOR CH 1/10W 1K	1	
R5		ERJ6GEYJ332	M.RESISTOR CH 1/10W 3.3K	1	
R6		ERJ6GEYJ104	M.RESISTOR CH 1/10W 100K	1	
R7		ERJ6GEYJ103	M.RESISTOR CH 1/10W 10K	1	
R8		ERJ6GEYJ102	M.RESISTOR CH 1/10W 1K	1	
R9		ERJ6GEYJ104	M.RESISTOR CH 1/10W 100K	1	
R10,11		ERJ6GEYJ102	M.RESISTOR CH 1/10W 1K	2	
R12		ERJ6GEYJ104	M.RESISTOR CH 1/10W 100K	1	
R13		ERJ6GEYJ103	M.RESISTOR CH 1/10W 10K	1	
R14		ERJ6GEYJ102	M.RESISTOR CH 1/10W 1K	1	
R15		ERJ6GEYJ104	M.RESISTOR CH 1/10W 100K	1	
R16		ERJ6GEYJ102	M.RESISTOR CH 1/10W 1K	1	
R17		ERJ6GEYJ332	M.RESISTOR CH 1/10W 3.3K	1	
R18		ERJ6GEYJ104	M.RESISTOR CH 1/10W 100K	1	
R19		ERJ6GEYJ103	M.RESISTOR CH 1/10W 10K	1	
R20		ERJ6GEYJ102	M.RESISTOR CH 1/10W 1K	1	
R21		ERJ6GEYJ104	M.RESISTOR CH 1/10W 100K	1	
R22,23		ERJ6GEYJ102	M.RESISTOR CH 1/10W 1K	2	
R24		ERJ6GEYJ104	M.RESISTOR CH 1/10W 100K	1	
R25		ERJ6GEYJ103	M.RESISTOR CH 1/10W 10K	1	
R26		ERJ6GEYJ102	M.RESISTOR CH 1/10W 1K	1	
R27		ERJ6GEYJ104	M.RESISTOR CH 1/10W 100K	1	
R28		ERJ6GEYJ102	M.RESISTOR CH 1/10W 1K	1	
R29		ERJ6GEYJ332	M.RESISTOR CH 1/10W 3.3K	1	
R30		ERJ6GEYJ104	M.RESISTOR CH 1/10W 100K	1	
R31		ERJ6GEYJ103	M.RESISTOR CH 1/10W 10K	1	
R32		ERJ6GEYJ102	M.RESISTOR CH 1/10W 1K	1	
R33		ERJ6GEYJ104	M.RESISTOR CH 1/10W 100K	1	
R34		ERJ6GEYJ102	M.RESISTOR CH 1/10W 1K	1	
R35		ERJ6GEYJ562	M.RESISTOR CH 1/10W 5.6K	1	
R36		ERJ6GEYJ104	M.RESISTOR CH 1/10W 100K	1	
R37		ERJ6GEYJ103	M.RESISTOR CH 1/10W 10K	1	
R38		ERJ6GEYJ102	M.RESISTOR CH 1/10W 1K	1	
R39		ERJ6GEYJ104	M.RESISTOR CH 1/10W 100K	1	
R40		ERJ6GEYJ102	M.RESISTOR CH 1/10W 1K	1	
R41		ERJ6GEYJ332	M.RESISTOR CH 1/10W 3.3K	1	
R42		ERJ6GEYJ104	M.RESISTOR CH 1/10W 100K	1	
R43		ERJ6GEYJ103	M.RESISTOR CH 1/10W 10K	1	
R44		ERJ6GEYJ102	M.RESISTOR CH 1/10W 1K	1	
R45		ERJ6GEYJ104	M.RESISTOR CH 1/10W 100K	1	
R46		ERJ6GEYJ102	M.RESISTOR CH 1/10W 1K	1	
R47		ERJ6GEYJ562	M.RESISTOR CH 1/10W 5.6K	1	
R48		ERJ6GEYJ104	M.RESISTOR CH 1/10W 100K	1	
R49		ERJ6GEYG223	M.RESISTOR CH 1/10W 22K	1	
R50,51		ERJ6GEYJ104	M.RESISTOR CH 1/10W 100K	2	
R52		ERJ6GEYG223	M.RESISTOR CH 1/10W 22K	1	
R53,54		ERJ6GEYJ103	M.RESISTOR CH 1/10W 10K	2	
R55		ERJ6GEYJ122	M.RESISTOR CH 1/10W 1.2K	1	
R56		ERJ6GEYJ102	M.RESISTOR CH 1/10W 1K	1	
R58		ERJ6GEYJ104	M.RESISTOR CH 1/10W 100K	1	
R59,60		ERJ6GEYG223	M.RESISTOR CH 1/10W 22K	2	
R61,62		ERJ6GEYJ183	M.RESISTOR CH 1/10W 18K	2	
VR1		VRV0109B502	V.RESISTOR 5K	1	
VR2		EVU013320A14	V.RESISTOR 10K	1	
VR3		VRV0109B502	V.RESISTOR 5K	1	
VR4		EVU013020A14	V.RESISTOR 10K	1	

Ref.No.		Part No.	Part Name & Description	Pcs	Remarks
VR5		VRV0109B502	V.RESISTOR 5K	1	
VR6		EVU013320A14	V.RESISTOR 10K	1	
VR7		VRV0109B502	V.RESISTOR 5K	1	
VR8		EVU013020A14	V.RESISTOR 10K	1	
VR9		VRV0109B502	V.RESISTOR 5K	1	
VR10		EVU013320A14	V.RESISTOR 10K	1	
VR11		VRV0109B502	V.RESISTOR 5K	1	
VR12		EVU013020A14	V.RESISTOR 10K	1	
VR13		VRV0109B502	V.RESISTOR 5K	1	
VR14		EVU013320A14	V.RESISTOR 10K	1	
VR15		VRV0109B502	V.RESISTOR 5K	1	
VR16		EVU013020A14	V.RESISTOR 10K	1	
VR17		VRV0109B103	V.RESISTOR 10K	1	
			MISCELLANEOUS		
		VMP0959	VOLUME HOLDER ANGLE	1	
		XYN3+C5S	SCREW	1	
	■	VEP84101C	P.C.BOARD W/COMPONENT		FOR AU-63H
			AUDIO VR		
			CAPACITORS		
C2		ECEA1CN100S	E.CAPACITOR 16V 10U	1	
C4		ECEA1CN100S	E.CAPACITOR 16V 10U	1	
C5-C8		ECEA1CU101	E.CAPACITOR 16V 100U	4	
CN160		VJP1234T	CONNECTOR(MALE) 7P	1	
CN162		VJP1235T	CONNECTOR(MALE) 8P	1	
CN163		VJP3082	CONNECTOR (MALE)	1	
IC1,C2		NJM4558D	IC	2	
IC3		AN78N09	IC	1	
IC4		AN79N09	IC	1	
			RESISTORS		
R7		ERDS2TJ103	C.RESISTOR 1/4W 10K	1	
R8		ERDS2TJ102	C.RESISTOR 1/4W 1K	1	
R9		ERDS2TJ104	C.RESISTOR 1/4W 100K	1	
R10,11		ERDS2TJ102	C.RESISTOR 1/4W 1K	2	
R12		ERDS2TJ104	C.RESISTOR 1/4W 100K	1	
R19		ERDS2TJ103	C.RESISTOR 1/4W 10K	1	
R20		ERDS2TJ102	C.RESISTOR 1/4W 1K	1	
R21		ERDS2TJ104	C.RESISTOR 1/4W 100K	1	
R22,23		ERDS2TJ102	C.RESISTOR 1/4W 1K	2	
R24		ERDS2TJ104	C.RESISTOR 1/4W 100K	1	
SW1		VSS0305	SWITCH	1	
VR3		VRV0109B502	V.RESISTOR 5K	1	
VR4		EVU013020A14	V.RESISTOR 10K	1	
VR7		VRV0109B502	V.RESISTOR 5K	1	
VR8		EVU013020A14	V.RESISTOR 10K	1	
VR11		ERDS2TJ273	C.RESISTOR 1/4W 27K	1	

Ref.No.		Part No.	Part Name & Description	Pcs	Remarks
			MISCELLANEOUS		
		VMP2605	P.C.B. HOLDER ANGLE	1	
	■	VEP84101B	P.C.BOARD W/COMPONENT		FOR AU-62H
			AUDIO VR		
			CAPACITORS		
C2		ECEA1CN100S	E.CAPACITOR 16V 10U	1	
C4		ECEA1CN100S	E.CAPACITOR 16V 10U	1	
C5-C8		ECEA1CU101	E.CAPACITOR 16V 100U	4	
CN160		VJP1234T	CONNECTOR(MALE) 7P	1	
CN162		VJP1235T	CONNECTOR(MALE) 8P	1	
CN163		VJP3082	CONNECTOR (MALE)	1	
IC1,C2		NJM4558D	IC	2	
IC3		AN78N09	IC	1	
IC4		AN79N09	IC	1	
			RESISTORS		
R7		ERDS2TJ103	C.RESISTOR 1/4W 10K	1	
R8		ERDS2TJ102	C.RESISTOR 1/4W 1K	1	
R9		ERDS2TJ104	C.RESISTOR 1/4W 100K	1	
R10,11		ERDS2TJ102	C.RESISTOR 1/4W 1K	2	
R12		ERDS2TJ104	C.RESISTOR 1/4W 100K	1	
R19		ERDS2TJ103	C.RESISTOR 1/4W 10K	1	
R20		ERDS2TJ102	C.RESISTOR 1/4W 1K	1	
R21		ERDS2TJ104	C.RESISTOR 1/4W 100K	1	
R22,23		ERDS2TJ102	C.RESISTOR 1/4W 1K	2	
R24		ERDS2TJ104	C.RESISTOR 1/4W 100K	1	
SW1		VSS0305	SWITCH	1	
VR3		VRV0109B502	V.RESISTOR 5K	1	
VR4		EVU013020A14	V.RESISTOR 10K	1	
VR7		VRV0109B502	V.RESISTOR 5K	1	
VR8		EVU013020A14	V.RESISTOR 10K	1	
VR11		EVUL7A020B54	V.RESISTOR 50K	1	
	■	VEP00E08C	P.C.BOARD W/COMPONENT		FOR AU-65H,AU-63H
			AUTO OFF LED		AU-62H

Ref.No.		Part No.	Part Name & Description	Pcs	Remarks
LED1		VLL0029	LED	1	
P113		VJP1141	CONNECTOR(MALE) 2P	1	
			RESISTORS		
R1		ERDS2TJ390	C.RESISTOR 1/4W 39	1	
	■	VEP00E72A	P.C.BOARD W/COMPONENT		FOR AU-65H,AU-63H
			CASSETTE CARRIIAGE LAMP		AU-62H
			MISCELINOUS		
		VLL0019	LAMP		
	■	VEP00E30A	P.C.BOARD W/COMPONENT		FOR AU-65H,AU-63H
			CASEETTE DETECT		AU-62H
			MISCLANIOUS		
		ON1110	PHOTO TRANSISTOR		
	■	VEP80422B	P.C.BOARD W/COMPONENT		FOR AU-65H,AU-63H
			EJECT INTERFACE		AU-62H
P112		VJP1188	CONNECTOR	1	
P115		VJP1188	CONNECTOR	1	
	■	VEP80232A	P.C.BOARD W/COMPONENT		FOR AU-65H,AU-63H
			EJECT SW		AU-62H
LED1		VLL0024	LED	1	
			RESISTORS		
R1		ERDS2TJ271	C.RESISTOR 1/4W 270	1	
SW1		VSP0221	SWITCH	1	

Ref.No.		Part No.	Part Name & Description	Pcs	Remarks
	■	VEP80631D	P.C.BOARD W/COMPONENT		FOR AU-65H
			FRONT INTERFACE		
			CAPACITORS		
C1-C9		ECKF1H103ZF	C.CAPACITOR 50V 0.01U	9	
C10-22		ECKF1H103ZF	C.CAPACITOR 50V 0.01U	13	
C23		ECQV1H104JZ	P.CAPACITOR 50V 0.1U	1	
C24		ECKF1H391KB	C.CAPACITOR 50V 390P	1	
C25		ECEA1CU101	E.CAPACITOR 16V 100U	1	
C26		ECKF1H103ZF	C.CAPACITOR 50V 0.01U	1	
C27		ECEA1CU101	E.CAPACITOR 16V 100U	1	
C28		ECKF1H103ZF	C.CAPACITOR 50V 0.01U	1	
C29		ECEA1CU330	E.CAPACITOR 16V 33U	1	
C30		ECKF1H103ZF	C.CAPACITOR 50V 0.01U	1	
C33-35		ECEA1CU101	E.CAPACITOR 16V 100U	3	
C101		ECQV1H274JZ	P.CAPACITOR 50V 0.27U	1	
C102		ECEA1CU100	E.CAPACITOR 16V 10U	1	
C103		ECEA1HU4R7	E.CAPACITOR 50V 4.7U	1	
C104		ECQV1H274JZ	P.CAPACITOR 50V 0.27U	1	
C105		ECEA1CU100	E.CAPACITOR 16V 10U	1	
C106		ECEA1HU4R7	E.CAPACITOR 50V 4.7U	1	
C107		ECQV1H274JZ	P.CAPACITOR 50V 0.27U	1	
C108		ECEA1CU100	E.CAPACITOR 16V 10U	1	
C109		ECEA1HU4R7	E.CAPACITOR 50V 4.7U	1	
C110		ECQV1H274JZ	P.CAPACITOR 50V 0.27U	1	
C111		ECEA1CU100	E.CAPACITOR 16V 10U	1	
C112		ECEA1HU4R7	E.CAPACITOR 50V 4.7U	1	
C115-18		ECEA1CU101	E.CAPACITOR 16V 100U	4	
CN130		VJP3082	CONNECTOR (MALE)	1	
CN131		VJP3080	CONNECTOR (MALE)	1	
CN132,33		VJP3078	CONNECTOR (MALE)	2	
CN134		VJP3082	CONNECTOR (MALE)	1	
CN135		VJP1233T	CONNECTOR(MALE) 6P	1	
CN136		VJP3083	CONNECTOR (MALE)	1	
CN137		VJP1232T	CONNECTOR(MALE) 5P	1	
CN138		VJP3078	CONNECTOR (MALE)	1	
CN139		VJP1234T	CONNECTOR(MALE) 7P	1	
D1-D3		MA165VT	DIODE	3	
D5,D6		MA165VT	DIODE	2	
D101-08		OA95	DIODE	8	
IC1-C3		MC14053BCP	IC	3	
IC4,C5		MC14021BCP	IC	2	
IC6		MC14050BCP	IC	1	
IC7		AN78L12	IC	1	
IC8		AN79L12	IC	1	
IC9		AN79L05	IC	1	
IC101,02		NJM4558D	IC	2	
IC104		AN78L09	IC	1	
IC105		AN79L09	IC	1	
P150		VJP2891A020	CONNECTOR(MALE)	1	

Ref.No.		Part No.	Part Name & Description	Pcs	Remarks
Q1		UN1212	TRANSISTOR-RESISTOR	1	
Q2		UN1213	TRANSISTOR-RESISTOR	1	
Q3,Q4		2SD636	TRANSISTOR	2	
Q101		2SD636	TRANSISTOR	1	
Q102		2SD1330	TRANSISTOR	1	
Q103		2SD636	TRANSISTOR	1	
Q104		2SD1330	TRANSISTOR	1	
Q105		2SD636	TRANSISTOR	1	
Q106		2SD1330	TRANSISTOR	1	
Q107		2SD636	TRANSISTOR	1	
Q108		2SD1330	TRANSISTOR	1	
			RESISTORS		
R7,R8		ERDS2TJ223	C.RESISTOR 1/4W 22K	2	
R9		ERDS2TJ103	C.RESISTOR 1/4W 10K	1	
R10-16		ERDS2TJ103	C.RESISTOR 1/4W 10K	7	
R25-32		ERDS2TJ103	C.RESISTOR 1/4W 10K	8	
R33,34		ERDS2TJ223	C.RESISTOR 1/4W 22K	2	
R35		ERDS2TJ102	C.RESISTOR 1/4W 1K	1	
R36		ERDS2TJ474	C.RESISTOR 1/4W 470K	1	
R37		ERDS2TJ103	C.RESISTOR 1/4W 10K	1	
R38,39		ERDS2TJ223	C.RESISTOR 1/4W 22K	2	
R40		ERDS2TJ474	C.RESISTOR 1/4W 470K	1	
R41		ERDS2TJ103	C.RESISTOR 1/4W 10K	1	
R42		ERDS2TJ223	C.RESISTOR 1/4W 22K	1	
R45-48		ERDS2TJ103	C.RESISTOR 1/4W 10K	4	
R49,50		ERDS2TJ151	C.RESISTOR 1/4W 150	2	
R51,52		ERDS2TJ103	C.RESISTOR 1/4W 10K	2	
R53		ERDS2TJ473	C.RESISTOR 1/4W 47K	1	
R54,55		ERDS2TJ103	C.RESISTOR 1/4W 10K	2	
R56		ERDS2TJ473	C.RESISTOR 1/4W 47K	1	
R72,73		ERDS2TJ223	C.RESISTOR 1/4W 22K	2	
R101		ERDS2TJ682	C.RESISTOR 1/4W 6.8K	1	
R102,03		ERDS2TJ223	C.RESISTOR 1/4W 22K	2	
R104		ERDS2TJ221	C.RESISTOR 1/4W 220	1	
R105		ERDS2TJ222	C.RESISTOR 1/4W 2.2K	1	
R106,07		ERDS2TJ103	C.RESISTOR 1/4W 10K	2	
R108		ERDS2TJ682	C.RESISTOR 1/4W 6.8K	1	
R109,10		ERDS2TJ223	C.RESISTOR 1/4W 22K	2	
R111		ERDS2TJ221	C.RESISTOR 1/4W 220	1	
R112		ERDS2TJ222	C.RESISTOR 1/4W 2.2K	1	
R113,14		ERDS2TJ103	C.RESISTOR 1/4W 10K	2	
R115		ERDS2TJ682	C.RESISTOR 1/4W 6.8K	1	
R116,17		ERDS2TJ223	C.RESISTOR 1/4W 22K	2	
R118		ERDS2TJ221	C.RESISTOR 1/4W 220	1	
R119		ERDS2TJ222	C.RESISTOR 1/4W 2.2K	1	
R120,21		ERDS2TJ103	C.RESISTOR 1/4W 10K	2	
R122		ERDS2TJ682	C.RESISTOR 1/4W 6.8K	1	
R123,24		ERDS2TJ223	C.RESISTOR 1/4W 22K	2	
R125		ERDS2TJ221	C.RESISTOR 1/4W 220	1	
R126		ERDS2TJ222	C.RESISTOR 1/4W 2.2K	1	
R127-29		ERDS2TJ103	C.RESISTOR 1/4W 10K	3	
R130		ERDS2TJ102	C.RESISTOR 1/4W 1K	1	
R131		ERDS2TJ104	C.RESISTOR 1/4W 100K	1	
R132		ERDS2TJ102	C.RESISTOR 1/4W 1K	1	
R133		ERDS2TJ562	C.RESISTOR 1/4W 5.6K	1	
R134		ERDS2TJ104	C.RESISTOR 1/4W 100K	1	
R135		ERDS2TJ103	C.RESISTOR 1/4W 10K	1	
R136		ERDS2TJ102	C.RESISTOR 1/4W 1K	1	
R137		ERDS2TJ104	C.RESISTOR 1/4W 100K	1	
R138		ERDS2TJ102	C.RESISTOR 1/4W 1K	1	
R139		ERDS2TJ562	C.RESISTOR 1/4W 5.6K	1	
R140		ERDS2TJ104	C.RESISTOR 1/4W 100K	1	
RA1,A2		EXBF9E103J	COMBI.R-R 10K	2	
SW3-W5		VSS0119	SWITCH	3	
SW6,W7		VSS0243	SWITCH	2	
SW8,W9		VSS0119	SWITCH	2	

Ref.No.		Part No.	Part Name & Description	Pcs	Remarks
SW10,11		VSS0119	SWITCH	2	
VR8		EVUF2AE20B53	V.RESISTOR 5K	1	
VR9		VRV0109B502	V.RESISTOR 5K	1	
VR101-04		VRV0110B203	V.RESISTOR 5K	4	
			MISCELLANEOUS		
		VGH0520	SLIDE SW SHEET	7	
		VGH1695	SWITCH COVER	2	
		VGU2089	SLIDE SW COVER	9	
		VMP2600	SWITCH ANGLE	1	
		XTV3+6F	SCREW	2	
	■	VEP80631B	P.C.BOARD W/COMPONENT		FOR AU-63H
			FRONT INTERFACE		
			CAPACITORS		
C1-C9		ECKF1H103ZF	C.CAPACITOR 50V 0.01U	9	
C10,11		ECKF1H103ZF	C.CAPACITOR 50V 0.01U	2	
C13		ECKF1H103ZF	C.CAPACITOR 50V 0.01U	1	
C17-22		ECKF1H103ZF	C.CAPACITOR 50V 0.01U	6	
C23		ECQV1H104JZ	P.CAPACITOR 50V 0.1U	1	
C24		ECKF1H391KB	C.CAPACITOR 50V 390P	1	
C25		ECEA1CU101	E.CAPACITOR 16V 100U	1	
C26		ECKF1H103ZF	C.CAPACITOR 50V 0.01U	1	
C27		ECEA1CU101	E.CAPACITOR 16V 100U	1	
C28		ECKF1H103ZF	C.CAPACITOR 50V 0.01U	1	
C29		ECEA1CU330	E.CAPACITOR 16V 33U	1	
C30		ECKF1H103ZF	C.CAPACITOR 50V 0.01U	1	
C33-35		ECEA1CU101	E.CAPACITOR 16V 100U	3	
C101		ECQV1H274JZ	P.CAPACITOR 50V 0.27U	1	
C102		ECEA1CU100	E.CAPACITOR 16V 10U	1	
C103		ECEA1HU4R7	E.CAPACITOR 50V 4.7U	1	
C104		ECQV1H274JZ	P.CAPACITOR 50V 0.27U	1	
C105		ECEA1CU100	E.CAPACITOR 16V 10U	1	
C106		ECEA1HU4R7	E.CAPACITOR 50V 4.7U	1	
C107		ECQV1H274JZ	P.CAPACITOR 50V 0.27U	1	
C108		ECEA1CU100	E.CAPACITOR 16V 10U	1	
C109		ECEA1HU4R7	E.CAPACITOR 50V 4.7U	1	
C110		ECQV1H274JZ	P.CAPACITOR 50V 0.27U	1	
C111		ECEA1CU100	E.CAPACITOR 16V 10U	1	
C112		ECEA1HU4R7	E.CAPACITOR 50V 4.7U	1	
C113,14		ECEA1CN100S	E.CAPACITOR 16V 10U	2	
C115-18		ECEA1CU101	E.CAPACITOR 16V 100U	4	
CN130		VJP3082	CONNECTOR (MALE)	1	
CN131		VJP3080	CONNECTOR (MALE)	1	
CN132,33		VJP3078	CONNECTOR (MALE)	2	
CN134		VJP3082	CONNECTOR (MALE)	1	
CN135		VJP1233T	CONNECTOR(MALE) 6P	1	
CN136		VJP3083	CONNECTOR (MALE)	1	
CN137		VJP1232T	CONNECTOR(MALE) 5P	1	
CN138		VJP3078	CONNECTOR (MALE)	1	
CN139		VJP1234T	CONNECTOR(MALE) 7P	1	
D5,D6		MA165VT	DIODE	2	
D101-08		OA95	DIODE	8	

Ref.No.		Part No.	Part Name & Description	Pcs	Remarks
IC1-C3		MC14053BCP	IC	3	
IC4,C5		MC14021BCP	IC	2	
IC6		MC14050BCP	IC	1	
IC7		AN78L12	IC	1	
IC8		AN79L12	IC	1	
IC9		AN79L05	IC	1	
IC101-03		NJM4558D	IC	3	
IC104		AN78L09	IC	1	
IC105		AN79L09	IC	1	
P150		VJP2891A020	CONNECTOR(MALE)	1	
Q1		UN1212	TRANSISTOR-RESISTOR	1	
Q101		2SD636	TRANSISTOR	1	
Q102		2SD1330	TRANSISTOR	1	
Q103		2SD636	TRANSISTOR	1	
Q104		2SD1330	TRANSISTOR	1	
Q105		2SD636	TRANSISTOR	1	
Q106		2SD1330	TRANSISTOR	1	
Q107		2SD636	TRANSISTOR	1	
Q108		2SD1330	TRANSISTOR	1	
			RESISTORS		
R7,R8		ERDS2TJ223	C.RESISTOR 1/4W 22K	2	
R9		ERDS2TJ103	C.RESISTOR 1/4W 10K	1	
R10-16		ERDS2TJ103	C.RESISTOR 1/4W 10K	7	
R25-32		ERDS2TJ103	C.RESISTOR 1/4W 10K	8	
R33,34		ERDS2TJ223	C.RESISTOR 1/4W 22K	2	
R35		ERDS2TJ102	C.RESISTOR 1/4W 1K	1	
R36		ERDS2TJ474	C.RESISTOR 1/4W 470K	1	
R37		ERDS2TJ103	C.RESISTOR 1/4W 10K	1	
R38,39		ERDS2TJ223	C.RESISTOR 1/4W 22K	2	
R40		ERDS2TJ474	C.RESISTOR 1/4W 470K	1	
R41		ERDS2TJ103	C.RESISTOR 1/4W 10K	1	
R42		ERDS2TJ223	C.RESISTOR 1/4W 22K	1	
R45-48		ERDS2TJ103	C.RESISTOR 1/4W 10K	4	
R72,73		ERDS2TJ223	C.RESISTOR 1/4W 22K	2	
R101		ERDS2TJ682	C.RESISTOR 1/4W 6.8K	1	
R102,03		ERDS2TJ223	C.RESISTOR 1/4W 22K	2	
R104		ERDS2TJ221	C.RESISTOR 1/4W 220	1	
R105		ERDS2TJ222	C.RESISTOR 1/4W 2.2K	1	
R106,07		ERDS2TJ103	C.RESISTOR 1/4W 10K	2	
R108		ERDS2TJ682	C.RESISTOR 1/4W 6.8K	1	
R109,10		ERDS2TJ223	C.RESISTOR 1/4W 22K	2	
R111		ERDS2TJ221	C.RESISTOR 1/4W 220	1	
R112		ERDS2TJ222	C.RESISTOR 1/4W 2.2K	1	
R113,14		ERDS2TJ103	C.RESISTOR 1/4W 10K	2	
R115		ERDS2TJ682	C.RESISTOR 1/4W 6.8K	1	
R116,17		ERDS2TJ223	C.RESISTOR 1/4W 22K	2	
R118		ERDS2TJ221	C.RESISTOR 1/4W 220	1	
R119		ERDS2TJ222	C.RESISTOR 1/4W 2.2K	1	
R120,21		ERDS2TJ103	C.RESISTOR 1/4W 10K	2	
R122		ERDS2TJ682	C.RESISTOR 1/4W 6.8K	1	
R123,24		ERDS2TJ223	C.RESISTOR 1/4W 22K	2	
R125		ERDS2TJ221	C.RESISTOR 1/4W 220	1	
R126		ERDS2TJ222	C.RESISTOR 1/4W 2.2K	1	
R127-29		ERDS2TJ103	C.RESISTOR 1/4W 10K	3	
R130		ERDS2TJ102	C.RESISTOR 1/4W 1K	1	
R131		ERDS2TJ104	C.RESISTOR 1/4W 100K	1	
R132		ERDS2TJ102	C.RESISTOR 1/4W 1K	1	
R133		ERDS2TJ562	C.RESISTOR 1/4W 5.6K	1	
R134		ERDS2TJ104	C.RESISTOR 1/4W 100K	1	
R135		ERDS2TJ103	C.RESISTOR 1/4W 10K	1	
R136		ERDS2TJ102	C.RESISTOR 1/4W 1K	1	
R137		ERDS2TJ104	C.RESISTOR 1/4W 100K	1	
R138		ERDS2TJ102	C.RESISTOR 1/4W 1K	1	

Ref.No.		Part No.	Part Name & Description	Pcs	Remarks
R139		ERDS2TJ562	C.RESISTOR 1/4W 5.6K	1	
R140		ERDS2TJ104	C.RESISTOR 1/4W 100K	1	
RA1,A2		EXBF9E103J	COMBI.R-R 10K	2	
SW1-W3		VSS0119	SWITCH	3	
SW5		VSS0119	SWITCH	1	
SW7		VSS0243	SWITCH	1	
SW10		VSS0119	SWITCH	1	
VR8		EVUF2AE20B53	V.RESISTOR 5K	1	
VR9		VRV0109B502	V.RESISTOR 5K	1	
VR10,11		EVUF2AE20A14	V.RESISTOR 10K	2	
VR12,13		VRV0109B502	V.RESISTOR 5K	2	
VR101-04		VRV0110B203	V.RESISTOR 5K	4	
			MISCELLANEOUS		
		VGH0520	SLIDE SW SHEET	5	
		VGH1695	SWITCH COVER	1	
		VGU2089	SLIDE SW COVER	6	
		VMP2600	SWITCH ANGLE	1	
		XTV3+6F	SCREW	2	
	■	VEP80631C	P.C.BOARD W/COMPONENT		FOR AU-62H
			FRONT INTERFACE		
			CAPACITORS		
C1-C9		ECKF1H103ZF	C.CAPACITOR 50V 0.01U	9	
C10,11		ECKF1H103ZF	C.CAPACITOR 50V 0.01U	2	
C13		ECKF1H103ZF	C.CAPACITOR 50V 0.01U	1	
C15		ECKF1H103ZF	C.CAPACITOR 50V 0.01U	1	
C17-22		ECKF1H103ZF	C.CAPACITOR 50V 0.01U	6	
C23		ECQV1H104JZ	P.CAPACITOR 50V 0.1U	1	
C24		ECKF1H391KB	C.CAPACITOR 50V 390P	1	
C25		ECEA1CU101	E.CAPACITOR 16V 100U	1	
C26		ECKF1H103ZF	C.CAPACITOR 50V 0.01U	1	
C27		ECEA1CU101	E.CAPACITOR 16V 100U	1	
C28		ECKF1H103ZF	C.CAPACITOR 50V 0.01U	1	
C29		ECEA1CU330	E.CAPACITOR 16V 33U	1	
C30		ECKF1H103ZF	C.CAPACITOR 50V 0.01U	1	
C33-35		ECEA1CU101	E.CAPACITOR 16V 100U	3	
C101		ECQV1H274JZ	P.CAPACITOR 50V 0.27U	1	
C102		ECEA1CU100	E.CAPACITOR 16V 10U	1	
C103		ECEA1HU4R7	E.CAPACITOR 50V 4.7U	1	
C104		ECQV1H274JZ	P.CAPACITOR 50V 0.27U	1	
C105		ECEA1CU100	E.CAPACITOR 16V 10U	1	
C106		ECEA1HU4R7	E.CAPACITOR 50V 4.7U	1	
C107		ECQV1H274JZ	P.CAPACITOR 50V 0.27U	1	
C108		ECEA1CU100	E.CAPACITOR 16V 10U	1	
C109		ECEA1HU4R7	E.CAPACITOR 50V 4.7U	1	
C110		ECQV1H274JZ	P.CAPACITOR 50V 0.27U	1	
C111		ECEA1CU100	E.CAPACITOR 16V 10U	1	
C112		ECEA1HU4R7	E.CAPACITOR 50V 4.7U	1	
C113,14		ECEA1CN100S	E.CAPACITOR 16V 10U	2	
C115-18		ECEA1CU101	E.CAPACITOR 16V 100U	4	

Ref.No.		Part No.	Part Name & Description	Pcs	Remarks
CN130		VJP3082	CONNECTOR (MALE)	1	
CN131		VJP3080	CONNECTOR (MALE)	1	
CN132,33		VJP3078	CONNECTOR (MALE)	2	
CN134		VJP3082	CONNECTOR (MALE)	1	
CN135		VJP1233T	CONNECTOR(MALE) 6P	1	
CN136		VJP3083	CONNECTOR (MALE)	1	
CN137		VJP1232T	CONNECTOR(MALE) 5P	1	
CN138		VJP3078	CONNECTOR (MALE)	1	
CN139		VJP1234T	CONNECTOR(MALE) 7P	1	
D6		MA165VT	DIODE	1	
D101-08		OA95	DIODE	8	
IC1-C3		MC14053BCP	IC	3	
IC4,C5		MC14021BCP	IC	2	
IC6		MC14050BCP	IC	1	
IC7		AN78L12	IC	1	
IC8		AN79L12	IC	1	
IC9		AN79L05	IC	1	
IC101-03		NJM4558D	IC	3	
IC104		AN78L09	IC	1	
IC105		AN79L09	IC	1	
P150		VJP2891A020	CONNECTOR(MALE)	1	
Q1		UN1212	TRANSISTOR-RESISTOR	1	
Q101		2SD636	TRANSISTOR	1	
Q102		2SD1330	TRANSISTOR	1	
Q103		2SD636	TRANSISTOR	1	
Q104		2SD1330	TRANSISTOR	1	
Q105		2SD636	TRANSISTOR	1	
Q106		2SD1330	TRANSISTOR	1	
Q107		2SD636	TRANSISTOR	1	
Q108		2SD1330	TRANSISTOR	1	
			RESISTORS		
R7,R8		ERDS2TJ223	C.RESISTOR 1/4W 22K	2	
R9		ERDS2TJ103	C.RESISTOR 1/4W 10K	1	
R10-16		ERDS2TJ103	C.RESISTOR 1/4W 10K	7	
R25-32		ERDS2TJ103	C.RESISTOR 1/4W 10K	8	
R33,34		ERDS2TJ223	C.RESISTOR 1/4W 22K	2	
R35		ERDS2TJ102	C.RESISTOR 1/4W 1K	1	
R36		ERDS2TJ474	C.RESISTOR 1/4W 470K	1	
R37		ERDS2TJ103	C.RESISTOR 1/4W 10K	1	
R38,39		ERDS2TJ223	C.RESISTOR 1/4W 22K	2	
R40		ERDS2TJ474	C.RESISTOR 1/4W 470K	1	
R41		ERDS2TJ103	C.RESISTOR 1/4W 10K	1	
R42		ERDS2TJ223	C.RESISTOR 1/4W 22K	1	
R45-48		ERDS2TJ103	C.RESISTOR 1/4W 10K	4	
R72,73		ERDS2TJ223	C.RESISTOR 1/4W 22K	2	
R101		ERDS2TJ682	C.RESISTOR 1/4W 6.8K	1	
R102,03		ERDS2TJ223	C.RESISTOR 1/4W 22K	2	
R104		ERDS2TJ221	C.RESISTOR 1/4W 220	1	
R105		ERDS2TJ222	C.RESISTOR 1/4W 2.2K	1	
R106,07		ERDS2TJ103	C.RESISTOR 1/4W 10K	2	
R108		ERDS2TJ682	C.RESISTOR 1/4W 6.8K	1	
R109,10		ERDS2TJ223	C.RESISTOR 1/4W 22K	2	
R111		ERDS2TJ221	C.RESISTOR 1/4W 220	1	
R112		ERDS2TJ222	C.RESISTOR 1/4W 2.2K	1	
R113,14		ERDS2TJ103	C.RESISTOR 1/4W 10K	2	
R115		ERDS2TJ682	C.RESISTOR 1/4W 6.8K	1	
R116,17		ERDS2TJ223	C.RESISTOR 1/4W 22K	2	
R118		ERDS2TJ221	C.RESISTOR 1/4W 220	1	
R119		ERDS2TJ222	C.RESISTOR 1/4W 2.2K	1	

Ref.No.		Part No.	Part Name & Description	Pcs	Remarks
R120,21		ERDS2TJ103	C.RESISTOR 1/4W 10K	2	
R122		ERDS2TJ682	C.RESISTOR 1/4W 6.8K	1	
R123,24		ERDS2TJ223	C.RESISTOR 1/4W 22K	2	
R125		ERDS2TJ221	C.RESISTOR 1/4W 220	1	
R126		ERDS2TJ222	C.RESISTOR 1/4W 2.2K	1	
R127-29		ERDS2TJ103	C.RESISTOR 1/4W 10K	3	
R130		ERDS2TJ102	C.RESISTOR 1/4W 1K	1	
R131		ERDS2TJ104	C.RESISTOR 1/4W 100K	1	
R132		ERDS2TJ102	C.RESISTOR 1/4W 1K	1	
R133		ERDS2TJ562	C.RESISTOR 1/4W 5.6K	1	
R134		ERDS2TJ104	C.RESISTOR 1/4W 100K	1	
R135		ERDS2TJ103	C.RESISTOR 1/4W 10K	1	
R136		ERDS2TJ102	C.RESISTOR 1/4W 1K	1	
R137		ERDS2TJ104	C.RESISTOR 1/4W 100K	1	
R138		ERDS2TJ102	C.RESISTOR 1/4W 1K	1	
R139		ERDS2TJ562	C.RESISTOR 1/4W 5.6K	1	
R140		ERDS2TJ104	C.RESISTOR 1/4W 100K	1	
RA1,A2		EXBF9E103J	COMBI.R-R 10K	2	
SW1-W3		VSS0119	SWITCH	3	
SW5		VSS0119	SWITCH	1	
SW7		VSS0243	SWITCH	1	
SW10		VSS0119	SWITCH	1	
VR8		EVUF2AE20B53	V.RESISTOR 5K	1	
VR9		VRV0109B502	V.RESISTOR 5K	1	
VR10,11		EVUF2AE20A14	V.RESISTOR 10K	2	
VR12,13		VRV0109B502	V.RESISTOR 5K	2	
VR101-04		VRV0110B203	V.RESISTOR 5K	4	
			MISCELLANEOUS		
		VGH0520	SLIDE SW SHEET	5	
		VGH1695	SWUTCH COVER	1	
		VGU2089	SLIDE SW COVER	6	
		VMP2600	SWITCH ANGLE	1	
		XTV3+6F	SCREW	2	
	■	VEP80440A	P.C.BOARD W/COMPONENT		FOR AU-65H,AU-63H
			FRONT LOADING		AU-62H
			MISCELLANEOUS		
		VJP1154	CONNECTOR (MALE)	1	
		VJP1246T	CONNECTOR (MALE)	1	
		VJP1249T	CONNECTOR (MALE)	1	
	■	VEP80559A	P.C.BOARD W/COMPONENT		FOR AU-65H
			FRONT MODE SELECT		
			CAPACITORS		
C1-C4		ECEA1CKG470	E.CAPACITOR 16V 47U	4	

Ref.No.		Part No.	Part Name & Description	Pcs	Remarks
CN180		VJP3078	CONNECTOR (MALE)	1	
CN181		VJP3079	CONNECTOR (MALE)	1	
D1,D2		VLL0047	DIODE	2	
D3,D4		VLL0032	LED	2	
IC1		UPC4557C	IC	1	
P153		VJP1144	CONNECTOR (MALE)	1	
P155		VJP1143	CONNECTOR(MALE)	1	
Q1,Q2		2SB641	TRANSISTOR	2	(Q,R)
Q3		2SD638-R	TRANSISTOR	1	(Q,R)
Q4		2SB643-Q	TRANSISTOR	1	<R>
			RESISTORS		
R1,R2		ERDS2TJ331	C.RESISTOR 1/4W 330	2	
R3		ERDS2TJ332	C.RESISTOR 1/4W 3.3K	1	
R4		ERDS2TJ153	C.RESISTOR 1/4W 15K	1	
R5		ERDS2TJ332	C.RESISTOR 1/4W 3.3K	1	
R6		ERDS2TJ153	C.RESISTOR 1/4W 15K	1	
R7,R8		ERDS2TJ560	C.RESISTOR 1/4W 56	2	
R9		ERDS2TJ562	C.RESISTOR 1/4W 5.6K	1	
R10,11		ERDS2TJ473	C.RESISTOR 1/4W 47K	2	
R12		ERDS2TJ562	C.RESISTOR 1/4W 5.6K	1	
R13,14		ERDS2TJ151	C.RESISTOR 1/4W 150	2	
SW1		VST0079	SWITCH	1	
SW2,W3		VST0080	SWITCH	2	
SW5,W6		VST0080	SWITCH	2	
			MISCELLANEOUS		
		VMX0473	SPACER	1	
		VMX1858	SPACER	2	
	■	VEP80559D	P.C.BOARD W/COMPONENT		FOR AU-63H
			FRONT MODE SELECT		
			CAPACITORS		
C1-C4		ECEA1CKG470	E.CAPACITOR 16V 47U	4	
CN180		VJP3078	CONNECTOR (MALE)	1	
CN181		VJP3079	CONNECTOR (MALE)	1	

Ref.No.		Part No.	Part Name & Description	Pcs	Remarks
D1,D2		VLL0047	DIODE	2	
IC1		UPC4557C	IC	1	
P153		VJP1144	CONNECTOR (MALE)	1	
P155		VJP1143	CONNECTOR(MALE)	1	
Q1,Q2		2SB641	TRANSISTOR	2	(Q,R)
Q3		2SD638-R	TRANSISTOR	1	(Q,R)
Q4		2SB643-Q	TRANSISTOR	1	<R>
			RESISTORS		
R1,R2		ERDS2TJ331	C.RESISTOR 1/4W 330	2	
R3		ERDS2TJ332	C.RESISTOR 1/4W 3.3K	1	
R4		ERDS2TJ153	C.RESISTOR 1/4W 15K	1	
R5		ERDS2TJ332	C.RESISTOR 1/4W 3.3K	1	
R6		ERDS2TJ153	C.RESISTOR 1/4W 15K	1	
R7,R8		ERDS2TJ560	C.RESISTOR 1/4W 56	2	
R9		ERDS2TJ562	C.RESISTOR 1/4W 5.6K	1	
R10,11		ERDS2TJ473	C.RESISTOR 1/4W 47K	2	
R12		ERDS2TJ562	C.RESISTOR 1/4W 5.6K	1	
R13,14		ERDS2TJ151	C.RESISTOR 1/4W 150	2	
SW1		VST0079	SWITCH	1	
SW2		VST0080	SWITCH	1	
SW5,W6		VST0080	SWITCH	2	
			MISCELLANEOUS		
		VMX1858	SPACER		
	■	VEP80559C	P.C.BOARD W/COMPONENT		FOR AU-62H
			FRONT MODE SELECT		
			CAPACITORS		
C1-C4		ECEA1CKG470	E.CAPACITOR 16V 47U	4	
CN180		VJP3078	CONNECTOR (MALE)	1	
CN181		VJP3079	CONNECTOR (MALE)	1	
D1,D2		VLL0047	DIODE	2	
IC1		UPC4557C	IC	1	
P153		VJP1144	CONNECTOR (MALE)	1	
P155		VJP1143	CONNECTOR(MALE)	1	

Ref.No.		Part No.	Part Name & Description	Pcs	Remarks
Q1,Q2		2SB641	TRANSISTOR	2	(Q,R)
Q3		2SD638-R	TRANSISTOR	1	(Q,R)
Q4		2SB643-Q	TRANSISTOR	1	<R>
			RESISTORS		
R1,R2		ERDS2TJ331	C.RESISTOR 1/4W 330	2	
R3		ERDS2TJ332	C.RESISTOR 1/4W 3.3K	1	
R4		ERDS2TJ153	C.RESISTOR 1/4W 15K	1	
R5		ERDS2TJ332	C.RESISTOR 1/4W 3.3K	1	
R6		ERDS2TJ153	C.RESISTOR 1/4W 15K	1	
R7,R8		ERDS2TJ560	C.RESISTOR 1/4W 56	2	
R9		ERDS2TJ562	C.RESISTOR 1/4W 5.6K	1	
R10,11		ERDS2TJ473	C.RESISTOR 1/4W 47K	2	
R12		ERDS2TJ562	C.RESISTOR 1/4W 5.6K	1	
R13,14		ERDS2TJ151	C.RESISTOR 1/4W 150	2	
SW1		VST0079	SWITCH	1	
SW2		VST0080	SWITCH	1	
SW6		VST0080	SWITCH	1	
			MISCELLANEOUS		
		VMX1858	COLOR SPACER		
	■	VEP86107B	P.C.BOARD W/COMPONENT		FOR AU-65H
			FRONT PANEL A		
			CAPACITORS		
C1-C8		ECUM1H103ZFN	C.CAPACITOR CH 50V 0.01U	8	
C9		ECEA1AU221	E.CAPACITOR 10V 220U	1	
C10-17		ECUM1E104ZFN	C.CAPACITOR CH 25V 0.1U	8	
D1,D2		MA151WA	DIODE	2	
D3		MA151K	DIODE	1	
D4-D6		MA151WA	DIODE	3	
D7		MA151WK	DIODE	1	
D8,D9		MA151WA	DIODE	2	
D10-12		MA151WA	DIODE	3	
D13		MA151K	DIODE	1	
D14,15		MA151WA	DIODE	2	
D16		MA151WK	DIODE	1	
D17-22		MA151WA	DIODE	6	
DP1		VSL0058	DISPLAY TUBE	1	
IC1		MC74HC138AF	IC	1	
IC2-C8		MC74HC374AF	IC	7	
IC9		MC74HC00AF	IC	1	
IC10-13		MC74HC138AF	IC	4	
IC18-21		MC74HC540F	IC	4	
IC22-25		TD62781AP	IC	4	

Ref.No.		Part No.	Part Name & Description	Pcs	Remarks
J2-J5		VJP3264030	CONNECTOR (MALE)	4	
LED1		LN217RP	LED	1	
LED2		EBG5504S	LED	1	
LED3		VLL0032	LED	1	
LED4-D9		LN317GPU	DIODE	6	
LED10-19		LN317GPU	DIODE	10	
LED20-23		PY3668S	LED	4	
LED24-28		EBG5504S	LED	5	
LED29-31		VLL0032	LED	3	
Q1,Q2		2SB710	TRANSISTOR	2	(Q,R)
Q3		UN2211	TRANSISTOR-RESISTOR	1	
Q4-Q9		2SD601-R	TRANSISTOR CHIP	6	(Q,R)
Q10-52		2SD601-R	TRANSISTOR CHIP	43	(Q,R)
			RESISTORS		
R1-R9		ERJ6GEYJ222	M.RESISTOR CH 1/10W 2.2K	9	
R10-49		ERJ6GEYJ222	M.RESISTOR CH 1/10W 2.2K	40	
R50-98		ERJ6GEYJ682	M.RESISTOR CH 1/10W 6.8K	49	
R99		ERJ6GEYJ331	M.RESISTOR CH 1/10W 330	1	
R100-44		ERJ6GEYJ331	M.RESISTOR CH 1/10W 330	45	
R145-69		ERJ6GEYJ391	M.RESISTOR CH 1/10W 390	25	
R170		ERJ6GEYJ103	M.RESISTOR CH 1/10W 10K	1	
R171		ERJ6GEYJ102	M.RESISTOR CH 1/10W 1K	1	
R172		ERJ6GEYJ103	M.RESISTOR CH 1/10W 10K	1	
R173		ERJ6GEYJ102	M.RESISTOR CH 1/10W 1K	1	
R174,75		ERJ6GEYJ331	M.RESISTOR CH 1/10W 330	2	
SW1		VSP0199	SWITCH	1	
SW2,W3		EVQQJ104K	SWITCH	2	
SW4		VSP0198	SWITCH	1	
SW5		VSP0193	SWITCH	1	
SW6		VSP0194	SWITCH	1	
SW7		VSP0195	SWITCH	1	
SW8		VSP0224	SWITCH	1	
SW9		VSP0279	SWITCH	1	
SW10		VSP0223	SWITCH	1	
SW11		VSP0199	SWITCH	1	
SW12,13		VSP0473	SWITCH	2	
SW14,15		VSP0198	SWITCH	2	
SW16		VSP0473	SWITCH	1	
SW17-19		VSP0199	SWITCH	3	
SW20-23		EVQQJ104K	SWITCH	4	
SW24,25		VSP0363	SWITCH	2	
SW26,27		EVQQJ104K	SWITCH	2	
SW28		VSP0199	SWITCH	1	
SW29		VSP0198	SWITCH	1	
SW30		VSP0204	SWITCH	1	
SW31,32		VSP0198	SWITCH	2	
SW33		VSP0239	SWITCH	1	
SW34		VSP0225	SWITCH	1	
SW35-37		EVQQ8B11K	SWITCH	3	
SW38-40		EVQQ8R13K	SWITCH	3	
SW41,42		VSS0172	SWITCH	2	
SW44		VSS0172	SWITCH	1	
			MISCELLANEOUS		
		VGF0191	LED HOLDER	1	
		VGQ0457	LED SPACER	4	
		VHN0061	NYLON NUT	6	
		VMX0473	SPACER	10	

Ref.No.		Part No.	Part Name & Description	Pcs	Remarks
		VMZ0829	LED COVER	1	
	■	VEP86086A	P.C.BOARD W/COMPONENT		FOR AU-63H,AU-62H
			FRONT PANEL A		
			CAPACITORS		
C1-C5		ECKF1H103ZF	C.CAPACITOR 50V 0.01U	5	
C8,C9		ECKF1H103ZF	C.CAPACITOR 50V 0.01U	2	
C10		ECKF1H103ZF	C.CAPACITOR 50V 0.01U	1	
C11		ECEA1AU221	E.CAPACITOR 10V 220U	1	
D5-D7		MA165VT	DIODE	3	
D9		MA165VT	DIODE	1	
D22		MA165VT	DIODE	1	
D24		MA165VT	DIODE	1	
D26-32		MA165VT	DIODE	7	
IC1		MC74HC138AN	IC	1	#IC
IC2-C5		MC74HC374AN	IC	4	#IC
IC8		MC74HC154N	IC	1	
IC9		MC74HC541N	IC	1	
IC10		MC74HC541N	IC	1	
IC11-13		AN6873N	IC	3	
IC15,16		M54514AP	IC	2	
IC18		M54514AP	IC	1	
J2		VJP1233T	CONNECTOR(MALE) 6P	1	
J3		VJP1235T	CONNECTOR(MALE) 8P	1	
J4,J5		VJP3080	CONNECTOR (MALE)	2	
LED1-D9		LN340GCPG	LED	9	
LED10-14		LN340GCPG	LED	5	
LED15,16		AYBG5305S	LED	2	
LED17		LN217RP	LED	1	
LED18		EBG5504S	LED	1	
LED19-34		LN317GPU	DIODE	16	
Q1-Q7		2SD636	TRANSISTOR	7	
Q8		2SB641	TRANSISTOR	1	
Q9		DTC114EA	TRANSISTOR RESISTOR	1	
Q10,11		2SB643	TRANSISTOR	2	
Q12		2SB641	TRANSISTOR	1	
			RESISTORS		
R1-R9		ERDS2TJ151	C.RESISTOR 1/4W 150	9	
R10		ERDS2TJ151	C.RESISTOR 1/4W 150	1	
R11,12		ERDS2TJ221	C.RESISTOR 1/4W 220	2	
R13-16		ERDS2TJ151	C.RESISTOR 1/4W 150	4	
R17		ERDS2TJ682	C.RESISTOR 1/4W 6.8K	1	
R18		ERDS2TJ222	C.RESISTOR 1/4W 2.2K	1	
R19		ERDS2TJ682	C.RESISTOR 1/4W 6.8K	1	
R20		ERDS2TJ222	C.RESISTOR 1/4W 2.2K	1	
R21		ERDS2TJ682	C.RESISTOR 1/4W 6.8K	1	

Ref.No.		Part No.	Part Name & Description	Pcs	Remarks
R22,23		ERDS2TJ222	C.RESISTOR 1/4W 2.2K	2	
R24		ERDS2TJ682	C.RESISTOR 1/4W 6.8K	1	
R25		ERDS2TJ222	C.RESISTOR 1/4W 2.2K	1	
R26,27		ERDS2TJ682	C.RESISTOR 1/4W 6.8K	2	
R28,29		ERDS2TJ222	C.RESISTOR 1/4W 2.2K	2	
R30		ERDS2TJ682	C.RESISTOR 1/4W 6.8K	1	
R31		ERDS2TJ222	C.RESISTOR 1/4W 2.2K	1	
R32		ERDS2TJ682	C.RESISTOR 1/4W 6.8K	1	
R34		ERDS2TJ391	C.RESISTOR 1/4W 390	1	
R35		ERDS2TJ151	C.RESISTOR 1/4W 150	1	
R36		ERDS2TJ391	C.RESISTOR 1/4W 390	1	
R39		ERDS2TJ102	C.RESISTOR 1/4W 1K	1	
R40		ERDS2TJ103	C.RESISTOR 1/4W 10K	1	
R41		ERDS2TJ102	C.RESISTOR 1/4W 1K	1	
R42		ERDS2TJ103	C.RESISTOR 1/4W 10K	1	
R43		ERDS2TJ682	C.RESISTOR 1/4W 6.8K	1	
R44		ERDS2TJ222	C.RESISTOR 1/4W 2.2K	1	
R45,46		ERDS2TJ151	C.RESISTOR 1/4W 150	2	
RA4,A5		EXBC44151J	COMBI.R-R 150	2	
RA6,A7		EXBC44391J	COMBI.R-R 390	2	
SW5		VSP0193	SWITCH	1	
SW6		VSP0195	SWITCH	1	
SW7		VSP0224	SWITCH	1	
SW9		VSP0223	SWITCH	1	
SW22		VSP0199	SWITCH	1	
SW24		VSP0198	SWITCH	1	
SW26		VSP0239	SWITCH	1	
SW27		VSP0225	SWITCH	1	
SW28,29		VSS0172	SWITCH	2	
SW30-32		EVQQ8R13K	SWITCH	3	
			MISCELLANEOUS		
		VGF0191	LED HOLDER	1	
		VGF0240	LED HOLDER	7	
		VHN0060	NYLON NUT	6	
		VJF0344	DISPLAY HOLDER	1	
		VJF0345	DISPLAY HOLDER	1	
		VMX0473	SPACER	1	
		VMX1606	SPACER	1	
		VMZ0829	LED COVER	1	

Ref.No.		Part No.	Part Name & Description	Pcs	Remarks
	■	VEP86108D	P.C.BOARD W/COMPONENT		FOR AU-65H
			FRONT PANEL B		
BZ1		VSQ0558	BUZZER	1	
			CAPACITORS		
C1,C2		ECUM1H330JCN	C.CAPACITOR CH 50V 33P	2	
C3-C5		ECUM1H103ZFN	C.CAPACITOR CH 50V 0.01U	3	
C6		ECUM1E104ZFN	C.CAPACITOR CH 25V 0.1U	1	
C7		ECEA1HU010	E.CAPACITOR 50V 1U	1	
C8,C9		ECUM1H103ZFN	C.CAPACITOR CH 50V 0.01U	2	
C10-12		ECUM1H103ZFN	C.CAPACITOR CH 50V 0.01U	3	
C14-16		ECUM1H103ZFN	C.CAPACITOR CH 50V 0.01U	3	
C18		ECEA1AU101	E.CAPACITOR 10V 100U	1	
C19		ECUM1H103ZFN	C.CAPACITOR CH 50V 0.01U	1	
C20		ECEA1AU101	E.CAPACITOR 10V 100U	1	
C21-25		ECUM1H103ZFN	C.CAPACITOR CH 50V 0.01U	5	
C26		ECUM1E104ZFN	C.CAPACITOR CH 25V 0.1U	1	
C27-29		ECUM1H103ZFN	C.CAPACITOR CH 50V 0.01U	3	
C30		ECUM1H101JCN	C.CAPACITOR CH 50V 100P	1	
C31,32		ECUM1H103ZFN	C.CAPACITOR CH 50V 0.01U	2	
C33		ECUM1H561JCN	C.CAPACITOR CH 50V 560P	1	
C34		ECUM1H103ZFN	C.CAPACITOR CH 50V 0.01U	1	
C35		ECEA1AU101	E.CAPACITOR 10V 100U	1	
C36,37		ECEA1AU102	E.CAPACITOR 10V 1000U	2	
C38		ECEA1HUR47	E.CAPACITOR 50V 0.47U	1	
C39		ECEA2AU101	E.CAPACITOR 100V 100U	1	
C40		ECQM1H103JF	P.CAPACITOR 50V 0.01U	1	
C41		ECUM1E104ZFN	C.CAPACITOR CH 25V 0.1U	1	
C42		ECEA1CU100	E.CAPACITOR 16V 10U	1	
C43,44		ECUM1H103ZFN	C.CAPACITOR CH 50V 0.01U	2	
C45		ECQM1H332JF	P.CAPACITOR 50V 3300P	1	
C46		ECUM1H103ZFN	C.CAPACITOR CH 50V 0.01U	1	
C58		ECUM1H102JCN	C.CAPACITOR CH 50V 1000P	1	
C59		ECUM1H103ZFN	C.CAPACITOR CH 50V 0.01U	1	
C60		ECUM1E104ZFN	C.CAPACITOR CH 25V 0.1U	1	
C61		ECUM1H103ZFN	C.CAPACITOR CH 50V 0.01U	1	
C62		ECQM1H682JF	P.CAPACITOR 50V 6800P	1	
C63		ECUM1H103ZFN	C.CAPACITOR CH 50V 0.01U	1	
C64-74		ECUM1E104ZFN	C.CAPACITOR CH 25V 0.1U	11	
C75		ECEA1AU221	E.CAPACITOR 10V 220U	1	
C76-86		ECUM1H103ZFN	C.CAPACITOR CH 50V 0.01U	11	
C88		ECUM1H103ZFN	C.CAPACITOR CH 50V 0.01U	1	
C100		ECQB1H103JF	P.CAPACITOR 50V 0.01U	1	
C101		ECQM1H103JF	P.CAPACITOR 50V 0.01U	1	
C102		ECEA1HFE100	E.CAPACITOR 50V 10U	1	
C103		ECQM1H103JF	P.CAPACITOR 50V 0.01U	1	
D1		MA151K	DIODE	1	
D2		MA151WK	DIODE	1	
D4		MA151K	DIODE	1	
D5		MA3082M	DIODE	1	
D6-D9		MA151K	DIODE	4	
D10		MA151K	DIODE	1	
D100		MA3200-L	DIODE	1	
D101		MA179	DIODE	1	
D102		MA185	DIODE	1	
D103		MA179	DIODE	1	
HS100		VSC3626		1	

Ref.No.		Part No.	Part Name & Description	Pcs	Remarks
IC1		MC74HC74AF	IC	1	
IC2		MC74HC161F	IC	1	
IC3		TL7705CPSB	IC	1	
IC4		TMPZ84C00AP6	IC	1	
IC5,C6		MC74HC541F	IC	2	
IC7		VSI1122	IC	1	
IC8		VSI0234	IC	1	
IC9		MC74HC139AF	IC	1	
IC10		MC74HC138AF	IC	1	
IC11		TMPZ84C43AF6	IC	1	
IC12		TMPZ84C30AF6	IC	1	
IC13		MC14015BF	IC	1	
IC14		MC14073BF	IC	1	
IC15		MC14049UBF	IC	1	
IC16		MC14013BF	IC	1	
IC17,18		MC14516BF	IC	2	
IC19		TMP82C55AF2	IC	1	
IC20		MC74HC273F	IC	1	
IC21		VSI0239	IC	1	
IC22		HD74HC93FP	IC	1	
IC23		MC74HC107F	IC	1	
IC24		HD74HC93FP	IC	1	
IC25		MC74HC107F	IC	1	
IC26		MC14001BF	IC	1	
IC27		TMP82C79F2	IC	1	
IC28		MC74HC244AF	IC	1	
IC29		MC74HC138AF	IC	1	
IC30		MC74HC32AF	IC	1	
IC31		SN74LS38NS	IC	1	
IC32		MC74HCU04F	IC	1	
IC33,34		MC74HC00AF	IC	2	
IC36,37		MC74HC04AF	IC	2	
IC38		MC74HC132AF	IC	1	
IC39		MC14538BF	IC	1	
IC40-49		MC74HC164F	IC	10	
IC50-58		TD62781AP	IC	9	
IC59		MC74HC74AF	IC	1	
ICS7		VJS2336A028	CONNECTOR (FEMALE)	1	
ICS21		VJS2336A028	CONNECTOR (FEMALE)	1	
J1		VJP1145	CONNECTOR (MALE)	1	
J2-J5		VJP3265030	CONNECTOR (MALE)	4	
L1,L2		VLP0017	COIL	2	
P150		VJP2891B020	CONNECTOR (MALE)	1	
Q1-Q3		UN2214	TRANSISTOR-RESISTOR	3	
Q4		2SA777	TRANSISTOR	1	
Q5		2SD1149-R	TRANSISTOR	1	<S>
Q6		UN2212	TRANSISTOR-RESISTOR	1	
Q7		2SD601-R	TRANSISTOR CHIP	1	(Q,R)
Q8,Q9		UN2214	TRANSISTOR-RESISTOR	2	
Q10		UN2214	TRANSISTOR-RESISTOR	1	
Q11		2SD946A	TRANSISTOR	1	
Q100		2SD1271A-P	TRANSISTOR	1	
Q101		2SC1318	TRANSISTOR	1	(R)
			RESISTORS		
R1		ERJ6GEYJ105	M.RESISTOR CH 1/10W 1M	1	
R2		ERJ6GEYJ102	M.RESISTOR CH 1/10W 1K	1	
R3		ERJ6GEYJ103	M.RESISTOR CH 1/10W 10K	1	
R4		ERJ6GEYJ124	M.RESISTOR CH 1/10W 120K	1	
R5		ERJ6GEYJ562	M.RESISTOR CH 1/10W 5.6K	1	

Ref.No.		Part No.	Part Name & Description	Pcs	Remarks
R7,R8		ERJ6GEYJ103	M.RESISTOR CH 1/10W 10K	2	
R9		ERJ6GEYJ153	M.RESISTOR CH 1/10W 15K	1	
R10-12		ERJ6GEYG223	M.RESISTOR CH 1/10W 22K	3	
R13		ERDS2TJ123	C.RESISTOR 1/4W 12K	1	
R14,15		ERJ6GEYJ333	M.RESISTOR CH 1/10W 33K	2	
R16-19		ERJ6GEYJ103	M.RESISTOR CH 1/10W 10K	4	
R20		ERJ6GEYJ473	M.RESISTOR CH 1/10W 47K	1	
R21		ERJ6GEYJ562	M.RESISTOR CH 1/10W 5.6K	1	
R22		ERJ6GEYJ105	M.RESISTOR CH 1/10W 1M	1	
R23		ERJ6GEYJ472	M.RESISTOR CH 1/10W 4.7K	1	
R24		ERJ6GEYJ333	M.RESISTOR CH 1/10W 33K	1	
R25		ERJ6GEYG223	M.RESISTOR CH 1/10W 22K	1	
R26		ERJ6GEYJ222	M.RESISTOR CH 1/10W 2.2K	1	
R27		ERJ6GEYJ102	M.RESISTOR CH 1/10W 1K	1	
R28		ERJ6GEYJ333	M.RESISTOR CH 1/10W 33K	1	
R29,30		ERJ6GEYJ104	M.RESISTOR CH 1/10W 100K	2	
R31		ERJ6GEYJ222	M.RESISTOR CH 1/10W 2.2K	1	
R32		ERJ6GEYG223	M.RESISTOR CH 1/10W 22K	1	
R33		ERJ6GEYJ472	M.RESISTOR CH 1/10W 4.7K	1	
R34-36		ERJ6GEYG223	M.RESISTOR CH 1/10W 22K	3	
R37		ERJ6GEYJ472	M.RESISTOR CH 1/10W 4.7K	1	
R38		ERJ6GEYG223	M.RESISTOR CH 1/10W 22K	1	
R39		ERJ6GEYJ102	M.RESISTOR CH 1/10W 1K	1	
R40-47		ERJ6GEYG223	M.RESISTOR CH 1/10W 22K	8	
R48-55		ERJ6GEYJ103	M.RESISTOR CH 1/10W 10K	8	
R56-71		ERJ6GEYG223	M.RESISTOR CH 1/10W 22K	16	
R72-76		ERJ6GEYJ103	M.RESISTOR CH 1/10W 10K	5	
R100		ERJ6GEYJ181	M.RESISTOR CH 1/10W 180	1	
R101		ERJ6GEYJ221	M.RESISTOR CH 1/10W 220	1	
R102		ERJ6GEYJ332	M.RESISTOR CH 1/10W 3.3K	1	
R103		ERDS2TJ103	C.RESISTOR 1/4W 10K	1	
R104		ERJ6GEYJ680	M.RESISTOR CH 1/10W 68	1	
R105		ERJ6GEYJ682	M.RESISTOR CH 1/10W 6.8K	1	
SW1		VSR0045	SWITCH	1	
SW2		VSS023702	SWITCH	1	
SW4		VSS023708	SWITCH	1	
T100		VLT0684	TRANSFORMER	1	
TF100		EYP2BN135	FUSE	1	
TP1		VJR0646	TEST POINT	1	
VR1		EVM38GA00B14	V.RESISTOR 10K	1	
VR2		EVM38GA00B54	V.RESISTOR 50K	1	
X1		VSX0150	CRYSTAL OSCILLATOR	1	
			MISCELLANEOUS		
		VMX2126	SPACER	4	
		XNG3CS	NUT	1	
		XWA3B	WASHER	1	
		XWG3	WASHER	1	
		XYNV3+K12S	SCREW	1	
	■	VEP86076F	P.C.BOARD W/COMPONENT		FOR AU-63H,AU-62H
			FRONT PANEL B		

Ref.No.		Part No.	Part Name & Description	Pcs	Remarks
BZ1		VSQ0558	BUZZER	1	
			CAPACITORS		
C1,C2		ECCF1H330JC	C.CAPACITOR 50V 33P	2	
C3-C5		ECKF1H103ZF	C.CAPACITOR 50V 0.01U	3	
C6		ECQV1H104JZ	P.CAPACITOR 50V 0.1U	1	
C7		ECEA1HKA010	E.CAPACITOR 50V 1U	1	
C8,C9		ECKF1H103ZF	C.CAPACITOR 50V 0.01U	2	
C10-13		ECKF1H103ZF	C.CAPACITOR 50V 0.01U	4	
C15-17		ECKF1H103ZF	C.CAPACITOR 50V 0.01U	3	
C18		ECQM1H103JV	P.CAPACITOR 50V 0.01U	1	
C19		ECEA1AKS101	E.CAPACITOR 10V 100U	1	
C20		ECKF1H103ZF	C.CAPACITOR 50V 0.01U	1	
C21		ECEA1AKS101	E.CAPACITOR 10V 100U	1	
C22-25		ECKF1H103ZF	C.CAPACITOR 50V 0.01U	4	
C26		ECEA1AKS101	E.CAPACITOR 10V 100U	1	
C27		ECEA1AKA221	E.CAPACITOR 10V 220U	1	
C28		ECQM1H102JV	P.CAPACITOR 50V 1000P	1	
C29		ECEA1HU470	E.CAPACITOR 50V 47U	1	
C30,31		ECKF1H103ZF	C.CAPACITOR 50V 0.01U	2	
C32		ECQM1H103JV	P.CAPACITOR 50V 0.01U	1	
C33		ECQM1H332JV	P.CAPACITOR 50V 3300P	1	
C34		ECQM1H103JV	P.CAPACITOR 50V 0.01U	1	
C35		ECQV1H104JZ	P.CAPACITOR 50V 0.1U	1	
C36		ECKF1H103ZF	C.CAPACITOR 50V 0.01U	1	
C37,38		ECQV1H104JZ	P.CAPACITOR 50V 0.1U	2	
C48-56		ECKF1H103ZF	C.CAPACITOR 50V 0.01U	9	
D1		MA185	DIODE	1	
D2		MA1220-M	DIODE	1	
D3		MA4075	DIODE	1	
D4-D9		MA165VT	DIODE	6	
D10-15		MA165VT	DIODE	6	
D16		1SS101	DIODE	1	
D17		MA165VT	DIODE	1	
D18		1SS101	DIODE	1	
IC1		MC74HC74AF	IC	1	
IC2		MC74HC161F	IC	1	
IC3		TL7705CPB	IC	1	
IC4		TMPZ84C00AP6	IC	1	
IC5,C6		MC74HC541N	IC	2	
IC7		VSI1123	IC	1	#IC
IC8		HM6264ALP12	IC	1	
IC9		MC74HC139AF	IC	1	
IC10		MC74HC138AF	IC	1	
IC11		TMPZ84C40AP6	IC	1	
IC12		TMPZ84C30AP6	IC	1	
IC13		TMP82C79F2	IC	1	
IC14		MC74HC138AF	IC	1	
IC15		TMP82C55AP2	IC	1	
IC16		MC14015BF	IC	1	
IC17		MC14013BF	IC	1	
IC18,19		MC14516BF	IC	2	
IC20		MC14049UBF	IC	1	
IC21		MC14073BF	IC	1	
IC22		SN74LS38NS	IC	1	
IC23		MC74HC132AF	IC	1	#IC
IC24		MC74HCU04F	IC	1	
IC25		MC74HC04AF	IC	1	
IC26		MC74HC32AN	IC	1	#IC

Ref.No.		Part No.	Part Name & Description	Pcs	Remarks
IC27		MC14001BCP	IC	1	
IC28		MC74HC00AN	IC	1	
IC7S		VJS2336A028	CONNECTOR (FEMALE)	1	
J1		VJP1145	CONNECTOR (MALE)	1	
J2		VJP1246T	CONNECTOR(MALE) 6P	1	
J3		VJP1248T	CONNECTOR(MALE) 8P	1	
J4,J5		VJP3092	CONNECTOR (MALE)	2	
L1,L2		VLP0017	COIL	2	
L3		VTD0035	COIL	1	
P150		VJP1976	CONNECTOR(MALE)	1	
Q1		2SD946A	TRANSISTOR	1	
Q2,Q3		2SB641	TRANSISTOR	2	
Q4		2SD1051	TRANSISTOR	1	
Q5-Q7		UN1214	TRANSISTOR-RESISTOR	3	
Q8		UN1212	TRANSISTOR-RESISTOR	1	
Q9		UN1214	TRANSISTOR-RESISTOR	1	
Q10		2SD636	TRANSISTOR	1	
			RESISTORS		
R1		ERDS2TJ105	C.RESISTOR 1/4W 1000K	1	
R2		ERDS2TJ103	C.RESISTOR 1/4W 10K	1	
R3		ERDS2TJ222	C.RESISTOR 1/4W 2.2K	1	
R4		ERDS2TJ472	C.RESISTOR 1/4W 4.7K	1	
R5		ERDS2TJ223	C.RESISTOR 1/4W 22K	1	
R6		ERDS2TJ562	C.RESISTOR 1/4W 5.6K	1	
R7		ERDS2TJ102	C.RESISTOR 1/4W 1K	1	
R8		ERDS2TJ103	C.RESISTOR 1/4W 10K	1	
R9		ERDS2TJ153	C.RESISTOR 1/4W 15K	1	
R10		ERDS2TJ103	C.RESISTOR 1/4W 10K	1	
R11		ERDS2TJ472	C.RESISTOR 1/4W 4.7K	1	
R12		ERDS2TJ103	C.RESISTOR 1/4W 10K	1	
R13		ERDS2TJ153	C.RESISTOR 1/4W 15K	1	
R14		ERDS2TJ222	C.RESISTOR 1/4W 2.2K	1	
R15		ERDS2TJ330	C.RESISTOR 1/4W 33	1	
R16		ERDS2TJ223	C.RESISTOR 1/4W 22K	1	
R17		ERDS2TJ472	C.RESISTOR 1/4W 4.7K	1	
R18		ERDS2TJ104	C.RESISTOR 1/4W 100K	1	
R19-21		ERDS2TJ103	C.RESISTOR 1/4W 10K	3	
R22		ERDS2TJ473	C.RESISTOR 1/4W 47K	1	
R23		ERDS2TJ562	C.RESISTOR 1/4W 5.6K	1	
R24		ERDS2TJ103	C.RESISTOR 1/4W 10K	1	
R25		ERDS2TJ105	C.RESISTOR 1/4W 1000K	1	
R26		ERDS2TJ472	C.RESISTOR 1/4W 4.7K	1	
R27		ERDS2TJ333	C.RESISTOR 1/4W 33K	1	
R28		ERDS2TJ223	C.RESISTOR 1/4W 22K	1	
R29		ERDS2TJ222	C.RESISTOR 1/4W 2.2K	1	
R30,31		ERDS2TJ102	C.RESISTOR 1/4W 1K	2	
RA1,A2		EXBR88223J	COMBI.R-R 22K	2	
SW1		VSR0045	SWITCH	1	
SW2		VSS023708	SWITCH	1	
TP3-P8		VJR0400Y	TEST POINT	6	
TPG1,G2		VJR0400B	TEST POINT	2	

Ref.No.		Part No.	Part Name & Description	Pcs	Remarks
VR1		VRV0109B103	V.RESISTOR 10K	1	
VR2		VRV0109B503	V.RESISTOR 50K	1	
X1		VSX0150	CRYSTAL OSCILLATOR	1	
	■	VEP80552A	P.C.BOARD W/COMPONENT		FOR AU-65H,AU-63H
			FRONT SW VR		AU-62H
			CAPACITORS		
C1		ECEA1CU101	E.CAPACITOR 16V 100U	1	
C2		ECKF1H103ZF	C.CAPACITOR 50V 0.01U	1	
C3		ECEA1CU101	E.CAPACITOR 16V 100U	1	
C4		ECKF1H103ZF	C.CAPACITOR 50V 0.01U	1	
CN190		VJP3095	CONNECTOR (MALE)	1	
L1,L2		VLQEL05S221K		2	
			RESISTORS		
R1-R9		ERDS2TJ103	C.RESISTOR 1/4W 10K	9	
R10-18		ERDS2TJ103	C.RESISTOR 1/4W 10K	9	
SW10		VSR0031	VOLTAGE SELECT SWITCH	1	
SW11		ESD32184	SWITCH	1	
VR1,R2		EVUF3AS01B53	V.RESISTOR 5K	2	
VR3-R8		EVUF3AE20B53	V.RESISTOR 5K	6	
VR9		EVUF3AS01B53	V.RESISTOR 5K	1	
	■	VEP80616A	P.C.BOARD W/COMPONENT		FOR AU-65H,AU-63H
			HEADPHONE VR		AU-62H
			CAPACITORS		
C1,C2		ECUM1H102KBN	C.CAPACITOR CH 50V 1000P	2	
L1-L3		VLQ0163K121	COIL	3	

Ref.No.		Part No.	Part Name & Description	Pcs	Remarks
P109		VJP1143	CONNECTOR(MALE)	1	
			MISCELLANEOUS		
		VJJ0150	HEADPHONE JACK	1	
	■	VEP00E04B	P.C.BOARD W/COMPONENT		FOR AU-65H,AU-63H
			LOADING PHOTO		AU-62H
			MISCELLANEOUS		
		CN1110	PHOTO TRANSISTOR	1	
	■	VEP80550B	P.C.BOARD W/COMPONENT		FOR AU-65H,AU-63H
			MECHA INTERFACE CIRCUIT		AU-62H
			CAPACITORS		
C1-C8		ECUM1H103ZFN	C.CAPACITOR CH 50V 0.01U	8	
C18-29		ECUM1H103ZFN	C.CAPACITOR CH 50V 0.01U	12	
C30		ECUM1H331JCN	C.CAPACITOR CH 50V 330P	1	
C31		ECUM1H103ZFN	C.CAPACITOR CH 50V 0.01U	1	
C32		ECEA0JKG101	E.CAPACITOR 6.3V 100U	1	
C33		ECUM1H103ZFN	C.CAPACITOR CH 50V 0.01U	1	
C34		ECQM1H222JF	P.CAPACITOR 50V 2200P	1	
C35		ECEA1HKG0R1	E.CAPACITOR 50V 0.1U	1	
C36,37		ECEA1CKG100	E.CAPACITOR 16V 10U	2	
C200		ECUM1H103ZFN	C.CAPACITOR CH 50V 0.01U	1	
C201,02		ECEA1CKG100	E.CAPACITOR 16V 10U	2	
CN110		VJP1243T	CONNECTOR(MALE) 3P	1	
CN111		VJP1243R	CONNECTOR(MALE) 3P	1	
CN112		VJP1243G	CONNECTOR(MALE) 3P	1	
CN113		VJP3091	CONNECTOR (MALE)	1	
CN114		VJP1244T	CONNECTOR(MALE) 4P	1	
CN117-19		VJP3091	CONNECTOR (MALE)	3	
CN120		VJP1244T	CONNECTOR(MALE) 4P	1	
CN121		VJP1248T	CONNECTOR(MALE) 8P	1	
CN122,23		VJS1413	CONNECTOR(FEMALE)	2	
D10		MA151WK	DIODE	1	
D11,12		MA151K	DIODE	2	
D200-03		MA153	DIODE	4	
IC1,C2		MC14021BF	IC	2	
IC4		MC14584BF	IC	1	
IC5		MC14050BF	IC	1	
IC7		MC14013BF	IC	1	
IC8		NJM2901M	IC	1	

Ref.No.		Part No.	Part Name & Description	Pcs	Remarks
L1		VLQEL05S102K	COIL 1000UH	1	
P405		VJP1149	CONNECTOR(MALE)	1	
P431,32		VJP1149	CONNECTOR(MALE)	2	
P61002,03		VJP1243T	CONNECTOR(MALE) 3P	2	
P61006,07		VJP1243T	CONNECTOR(MALE) 3P	2	
P61008		VJP1246T	CONNECTOR(MALE) 6P	1	
P61017		VJP1932T	CONNECTOR (MALE)	1	
P61020		VJP1932T	CONNECTOR (MALE)	1	
P61021		VJP3091	CONNECTOR (MALE)	1	
P61022		VJP1244T	CONNECTOR(MALE) 4P	1	
P61025		VJP1245T	CONNECTOR(MALE) 5P	1	
P61027		VJP1243T	CONNECTOR(MALE) 3P	1	
P61032		VJP1242T	CONNECTOR(MALE) 2P	1	
P61033		VJP1243T	CONNECTOR(MALE) 3P	1	
Q15		2SB710	TRANSISTOR	1	(Q,R)
Q16,17		2SD601-R	TRANSISTOR CHIP	2	(Q,R)
Q200		2SD602	TRANSISTOR	1	(Q,R)
			RESISTORS		
R3		ERJ6GEYJ103	M.RESISTOR CH 1/10W 10K	1	
R40,41		ERJ6GEYJ123	M.RESISTOR CH 1/10W 12K	2	
R42		ERJ6GEYJ274	M.RESISTOR CH 1/10W 270K	1	
R43		ERJ6GEYG223	M.RESISTOR CH 1/10W 22K	1	
R44		ERJ6GEYJ104	M.RESISTOR CH 1/10W 100K	1	
R46,47		ERJ6GEYG563	M.RESISTOR CH 1/10W 56K	2	
R48		ERJ6GEYJ474	M.RESISTOR CH 1/10W 470K	1	
R49		ERJ6GEYJ103	M.RESISTOR CH 1/10W 10K	1	
R50		ERJ6GEYJ274	M.RESISTOR CH 1/10W 270K	1	
R51		ERJ6GEYJ333	M.RESISTOR CH 1/10W 33K	1	
R52		ERJ6GEYJ123	M.RESISTOR CH 1/10W 12K	1	
R53		ERJ6GEYJ103	M.RESISTOR CH 1/10W 10K	1	
R54		ERJ6GEYJ123	M.RESISTOR CH 1/10W 12K	1	
R55		ERJ6GEYJ103	M.RESISTOR CH 1/10W 10K	1	
R56		ERJ6GEYJ123	M.RESISTOR CH 1/10W 12K	1	
R57		ERJ6GEYJ103	M.RESISTOR CH 1/10W 10K	1	
R58		ERJ6GEYJ123	M.RESISTOR CH 1/10W 12K	1	
R59,60		ERJ6GEYJ333	M.RESISTOR CH 1/10W 33K	2	
R61,62		ERJ6GEYJ103	M.RESISTOR CH 1/10W 10K	2	
R63		ERJ6GEYJ123	M.RESISTOR CH 1/10W 12K	1	
R64		ERJ6GEYJ103	M.RESISTOR CH 1/10W 10K	1	
R65		ERJ6GEYJ123	M.RESISTOR CH 1/10W 12K	1	
R66		ERJ6GEYJ103	M.RESISTOR CH 1/10W 10K	1	
R67		ERJ6GEYJ123	M.RESISTOR CH 1/10W 12K	1	
R68		ERJ6GEYJ103	M.RESISTOR CH 1/10W 10K	1	
R69		ERJ6GEYJ102	M.RESISTOR CH 1/10W 1K	1	
R70		ERJ6GEYJ474	M.RESISTOR CH 1/10W 470K	1	
R71		ERJ6GEYJ103	M.RESISTOR CH 1/10W 10K	1	
R72		ERJ6GEYG223	M.RESISTOR CH 1/10W 22K	1	
R75		ERJ6GEYJ824	M.RESISTOR CH 1/10W 820K	1	
R76,77		ERJ6GEYJ102	M.RESISTOR CH 1/10W 1K	2	
R78,79		ERJ6GEYJ824	M.RESISTOR CH 1/10W 820K	2	
R80,81		ERJ6GEYJ102	M.RESISTOR CH 1/10W 1K	2	
R82		ERJ6GEYJ824	M.RESISTOR CH 1/10W 820K	1	
R83,84		ERJ6GEYJ222	M.RESISTOR CH 1/10W 2.2K	2	
R85,86		ERJ6GEYJ104	M.RESISTOR CH 1/10W 100K	2	
R87		ERJ6GEYG563	M.RESISTOR CH 1/10W 56K	1	
R88		ERJ6GEYJ105	M.RESISTOR CH 1/10W 1M	1	
R89		ERJ6GEYJ104	M.RESISTOR CH 1/10W 100K	1	
R90		ERJ6GEYG563	M.RESISTOR CH 1/10W 56K	1	
R91		ERJ6GEYJ105	M.RESISTOR CH 1/10W 1M	1	
R92		ERJ6GEYJ103	M.RESISTOR CH 1/10W 10K	1	
R93		ERG12SJ220	M.RESISTOR 1/2W 22	1	
R94		ERJ6GEYJ222	M.RESISTOR CH 1/10W 2.2K	1	
R95		ERJ6GEYJ474	M.RESISTOR CH 1/10W 470K	1	
R96		ERJ6GEYJ104	M.RESISTOR CH 1/10W 100K	1	
R97		ERJ6GEYJ332	M.RESISTOR CH 1/10W 3.3K	1	
R98,99		ERJ6GEYJ181	M.RESISTOR CH 1/10W 180	2	

Ref.No.		Part No.	Part Name & Description	Pcs	Remarks
R100,01		ERJ6GEYJ181	M.RESISTOR CH 1/10W 180	2	
R200		ERJ6GEYJ123	M.RESISTOR CH 1/10W 12K	1	
R201		ERJ6GEYJ103	M.RESISTOR CH 1/10W 10K	1	
R202		ERJ6GEYJ101	M.RESISTOR CH 1/10W 100	1	
R203		ERJ6GEYJ272	M.RESISTOR CH 1/10W 2.7K	1	
R204		ERJ6GEYJ822	M.RESISTOR CH 1/10W 8.2K	1	
R205-08		ERJ6GEYJ102	M.RESISTOR CH 1/10W 1K	4	
R209		ERJ6GEYG563	M.RESISTOR CH 1/10W 56K	1	
R210		ERJ6GEYJ123	M.RESISTOR CH 1/10W 12K	1	
R211		ERJ6GEYJ101	M.RESISTOR CH 1/10W 100	1	
			MISCELLANEOUS		
		VHN0011	LATCH	5	
		VJF0304	CLAMPER	8	
		VMZ1716	BARRIER	1	
	■	VEP80083B	P.C.BOARD W/COMPONENT		FOR AU-65H
			METER CHANGE SW		
SW1		VSS0183	SWITCH	1	
	■	VEP80333C	P.C.BOARD W/COMPONENT		FOR AU-65H
			METER LAMP		
LED1-D9		VLL0048	LED	9	
LED10-16		VLL0048	LED	7	
P100		VJP1149	CONNECTOR(MALE)	1	
			RESISTORS		
R1-R4		ERDS1TJ152	C.RESISTOR 1/2W 1.5K	4	
			MISCELLANEOUS		
		KL-02	LED SPACER	12	
	■	VEP80333B	P.C.BOARD W/COMPONENT		FOR AU-63H,AU-62H
			METER LAMP		

Ref.No.		Part No.	Part Name & Description	Pcs	Remarks
LED1-D4		VLL0048	LED	4	
LED9		VLL0048	LED	1	
LED10-16		VLL0048	LED	7	
P100		VJP1149	CONNECTOR(MALE)	1	
			RESISTORS		
R1		ERDS1TJ152	C.RESISTOR 1/2W 1.5K	1	
R3,R4		ERDS1TJ152	C.RESISTOR 1/2W 1.5K	2	
			MISCELLANEOUS		
		KL-02	LED SPACER	12	
	■	VEP83170B	P.C.BOARD W/COMPONENT		FOR AU-65H
			PICTURE IN PICTURE		
			CAPACITORS		
C1		ECUM1H223KBN	C.CAPACITOR CH 50V 0.022U	1	
C2		ECEA1CU101	E.CAPACITOR 16V 100U	1	
C6,C7		ECEA1HU4R7	E.CAPACITOR 50V 4.7U	2	
C9		ECEA1HU4R7	E.CAPACITOR 50V 4.7U	1	
C10		ECEA1CU100	E.CAPACITOR 16V 10U	1	
C11		ECEA1CU101	E.CAPACITOR 16V 100U	1	
C13		ECEA1HU2R2	E.CAPACITOR 50V 2.2U	1	
C100		ECEA1CU101	E.CAPACITOR 16V 100U	1	
C101		ECUM1H223KBN	C.CAPACITOR CH 50V 0.022U	1	
C105		ECEA1CU330	E.CAPACITOR 16V 33U	1	
C106		ECUM1H100DCN	C.CAPACITOR CH 50V 10P	1	
C107		ECEA1HU2R2	E.CAPACITOR 50V 2.2U	1	
C108		ECHU1C333JA5	P.CAPACITOR 16V 0.033U	1	
C109		ECEA1HUR22	E.CAPACITOR 50V 0.22U	1	
C110		ECUM1H103KBN	C.CAPACITOR CH 50V 0.01U	1	
C111		ECEA1HU4R7	E.CAPACITOR 50V 4.7U	1	
C112-14		ECEA1HU010	E.CAPACITOR 50V 1U	3	
C115		ECUM1H103KBN	C.CAPACITOR CH 50V 0.01U	1	
C116		ECHU1C102JA5	P.CAPACITOR 16V 1000P	1	
C118		ECHU1C682JA5	P.CAPACITOR 16V 6800P	1	
C119		ECEA1CU470	E.CAPACITOR 16V 47U	1	
C120		ECUM1H150JCN	C.CAPACITOR CH 50V 15P	1	
C121		ECUM1H223KBN	C.CAPACITOR CH 50V 0.022U	1	
C122		ECEA1HU010	E.CAPACITOR 50V 1U	1	
C123		ECUM1E104ZFN	C.CAPACITOR CH 25V 0.1U	1	
C124		ECUM1H103KBN	C.CAPACITOR CH 50V 0.01U	1	
C126,27		ECUM1E104ZFN	C.CAPACITOR CH 25V 0.1U	2	
C131		ECUM1H271JCN	C.CAPACITOR CH 50V 270P	1	
C132		ECHU1C152JA5	P.CAPACITOR 16V 1500P	1	
C202		ECEA1CU470	E.CAPACITOR 16V 47U	1	
C203		ECHU1C682JA5	P.CAPACITOR 16V 6800P	1	
C204		ECUM1H150JCN	C.CAPACITOR CH 50V 15P	1	
C205		ECUM1H100DCN	C.CAPACITOR CH 50V 10P	1	
C206		ECEA1HU2R2	E.CAPACITOR 50V 2.2U	1	
C207		ECUM1H100DCN	C.CAPACITOR CH 50V 10P	1	
C208		ECUM1H103KBN	C.CAPACITOR CH 50V 0.01U	1	
C209		ECHU1C333JA5	P.CAPACITOR 16V 0.033U	1	
C210		ECEA1HUR22	E.CAPACITOR 50V 0.22U	1	
C211		ECEA1HU4R7	E.CAPACITOR 50V 4.7U	1	
C212		ECUM1H103KBN	C.CAPACITOR CH 50V 0.01U	1	
C214		ECHU1C102JA5	P.CAPACITOR 16V 1000P	1	

Ref.No.		Part No.	Part Name & Description	Pcs	Remarks
C215		ECEA1HU010	E.CAPACITOR 50V 1U	1	
C216		ECHU1C102JA5	P.CAPACITOR 16V 1000P	1	
C217		ECUM1H103KBN	C.CAPACITOR CH 50V 0.01U	1	
C218		ECHU1C152JA5	P.CAPACITOR 16V 1500P	1	
C219		ECUM1H223KBN	C.CAPACITOR CH 50V 0.022U	1	
C220		ECEA1HU010	E.CAPACITOR 50V 1U	1	
C230		ECUM1H271JCN	C.CAPACITOR CH 50V 270P	1	
C280		ECUM1H680JCN	C.CAPACITOR CH 50V 68P	1	
C301,02		ECEA1CU470	E.CAPACITOR 16V 47U	2	
C303		ECUM1H220JCN	C.CAPACITOR CH 50V 22P	1	
C304		ECEA1CU101	E.CAPACITOR 16V 100U	1	
C305		ECUM1H223KBN	C.CAPACITOR CH 50V 0.022U	1	
C306		ECEA1CU101	E.CAPACITOR 16V 100U	1	
C307,08		ECUM1H223KBN	C.CAPACITOR CH 50V 0.022U	2	
C310		ECUM1E104ZFN	C.CAPACITOR CH 25V 0.1U	1	
C311		ECUM1H151JCN	C.CAPACITOR CH 50V 150P	1	
C314,15		ECUM1H681JCN	C.CAPACITOR CH 50V 680P	2	
C321		ECUM1H121JCN	C.CAPACITOR CH 50V 120P	1	
C340		ECHU1C102JA5	P.CAPACITOR 16V 1000P	1	
C341,42		ECUM1E104ZFN	C.CAPACITOR CH 25V 0.1U	2	
C343		ECEA1CU101	E.CAPACITOR 16V 100U	1	
C344,45		ECUM1E104ZFN	C.CAPACITOR CH 25V 0.1U	2	
C346		ECEA1CU101	E.CAPACITOR 16V 100U	1	
C347,48		ECUM1E104ZFN	C.CAPACITOR CH 25V 0.1U	2	
C349		ECEA1CU101	E.CAPACITOR 16V 100U	1	
C350,51		ECUM1H331JCN	C.CAPACITOR CH 50V 330P	2	
C352		ECEA1HU010	E.CAPACITOR 50V 1U	1	
C403,04		ECUM1H470JCN	C.CAPACITOR CH 50V 47P	2	
C405,06		ECUM1H103KBN	C.CAPACITOR CH 50V 0.01U	2	
C451,52		ECEA1CU470	E.CAPACITOR 16V 47U	2	
C501		ECUM1H103KBN	C.CAPACITOR CH 50V 0.01U	1	
C503		ECUM1H101JCN	C.CAPACITOR CH 50V 100P	1	
C506		ECUM1H330JCN	C.CAPACITOR CH 50V 33P	1	
C508-10		ECUM1H103KBN	C.CAPACITOR CH 50V 0.01U	3	
C511		ECUM1H221JCN	C.CAPACITOR CH 50V 220P	1	
C512,13		ECUM1H470JCN	C.CAPACITOR CH 50V 47P	2	
C551,52		ECEA1CU470	E.CAPACITOR 16V 47U	2	
C601		ECUM1C104KBN	C.CAPACITOR CH 16V 0.1U	1	
C602,03		ECUM1H220JCN	C.CAPACITOR CH 50V 22P	2	
C604,05		ECUM1H103KBN	C.CAPACITOR CH 50V 0.01U	2	
C611		ECUM1C104KBN	C.CAPACITOR CH 16V 0.1U	1	
C612,13		ECUM1H220JCN	C.CAPACITOR CH 50V 22P	2	
C614		ECUM1H180JCN	C.CAPACITOR CH 50V 18P	1	
C700		ECUM1H223KBN	C.CAPACITOR CH 50V 0.022U	1	
C701-05		ECEA1CU100	E.CAPACITOR 16V 10U	5	
C706		ECUM1H223KBN	C.CAPACITOR CH 50V 0.022U	1	
C707		ECEA1CU100	E.CAPACITOR 16V 10U	1	
C708,09		ECUM1E104KBN	C.CAPACITOR CH 25V 0.1U	2	
C710		ECEA1CU100	E.CAPACITOR 16V 10U	1	
C711		ECUM1H223KBN	C.CAPACITOR CH 50V 0.022U	1	
C712-15		ECUM1E104KBN	C.CAPACITOR CH 25V 0.1U	4	
C716		ECUM1H223KBN	C.CAPACITOR CH 50V 0.022U	1	
C718		ECUM1E104KBN	C.CAPACITOR CH 25V 0.1U	1	
C719		ECUM1H223KBN	C.CAPACITOR CH 50V 0.022U	1	
C720		ECEA1CU100	E.CAPACITOR 16V 10U	1	
C722		ECUM1H223KBN	C.CAPACITOR CH 50V 0.022U	1	
C725		ECUM1H103KBN	C.CAPACITOR CH 50V 0.01U	1	
C726		ECUM1E104KBN	C.CAPACITOR CH 25V 0.1U	1	
C790		ECUM1H560JCN	C.CAPACITOR CH 50V 56P	1	
C801		ECEA1HU010	E.CAPACITOR 50V 1U	1	
C802		ECUM1E473KBN	C.CAPACITOR CH 25V 0.047U	1	
C803		ECEA1CU100	E.CAPACITOR 16V 10U	1	
C804		ECUM1E104ZFN	C.CAPACITOR CH 25V 0.1U	1	
C805,06		ECUM1C104KBN	C.CAPACITOR CH 16V 0.1U	2	
C807		ECUM1E104ZFN	C.CAPACITOR CH 25V 0.1U	1	
C808		ECUM1H270JCN	C.CAPACITOR CH 50V 27P	1	
C809		ECEA1HU010	E.CAPACITOR 50V 1U	1	
C810		ECUM1E473KBN	C.CAPACITOR CH 25V 0.047U	1	
C811		ECEA1CU100	E.CAPACITOR 16V 10U	1	
C812		ECUM1E104ZFN	C.CAPACITOR CH 25V 0.1U	1	
C813		ECUM1C104KBN	C.CAPACITOR CH 16V 0.1U	1	
C814		ECUM1E104ZFN	C.CAPACITOR CH 25V 0.1U	1	
C815		ECEA1CU470	E.CAPACITOR 16V 47U	1	
C816		ECUM1E104ZFN	C.CAPACITOR CH 25V 0.1U	1	
C817		ECEA1CU470	E.CAPACITOR 16V 47U	1	

Ref.No.		Part No.	Part Name & Description	Pcs	Remarks
C818		ECEA1HU010	E.CAPACITOR 50V 1U	1	
C819		ECUM1E473KBN	C.CAPACITOR CH 25V 0.047U	1	
C820		ECUM1C104KBN	C.CAPACITOR CH 16V 0.1U	1	
C821		ECUM1H270JCN	C.CAPACITOR CH 50V 27P	1	
C822		ECUM1H221JCN	C.CAPACITOR CH 50V 220P	1	
C823		ECUM1H120JCN	C.CAPACITOR CH 50V 12P	1	
C826		ECUM1H101JCN	C.CAPACITOR CH 50V 100P	1	
C827		ECUM1H100DCN	C.CAPACITOR CH 50V 10P	1	
C828		ECUM1H470JCN	C.CAPACITOR CH 50V 47P	1	
C829		ECUM1H330JCN	C.CAPACITOR CH 50V 33P	1	
C830,31		ECUM1H103KBN	C.CAPACITOR CH 50V 0.01U	2	
C901		ECUM1H151JCN	C.CAPACITOR CH 50V 150P	1	
C902		ECUM1H471JCN	C.CAPACITOR CH 50V 470P	1	
C951,52		ECUM1E104ZFN	C.CAPACITOR CH 25V 0.1U	2	
C953		ECEA1CU100	E.CAPACITOR 16V 10U	1	
C954,55		ECUM1E104ZFN	C.CAPACITOR CH 25V 0.1U	2	
C956		ECEA1CU100	E.CAPACITOR 16V 10U	1	
CN800		VJP1511T	CONNECTOR(MALE)	1	
CN801		VJP1393T	CONNECTOR(MALE) 13P	1	
CN802		VJP1231T	CONNECTOR(MALE) 4P	1	
D1,D2		MA151K	DIODE	2	
D101		MA151K	DIODE	1	
D102		MA151WK	DIODE	1	
D103		RD2.0EB2	DIODE	1	
D201		MA151K	DIODE	1	
D501		MA151WA	DIODE	1	
D502		MA151K	DIODE	1	
FL2		VLF1013	FILTER	1	
FL3		VLF1009	FILTER	1	
FL4		VLF1008	FILTER	1	
FL5,L6		VLF1011	FILTER	2	
IC1		HA118088MP	IC	1	
IC2		HA11567MP	IC	1	
IC3		HA11535MP	IC	1	
IC4		HD49410FS	IC	1	
IC5		HM53461ZP	IC	1	
IC6		AN79L05	IC	1	
IC8		MC74HC02AF	IC	1	
IC9		AN79L05	IC	1	
IC10		AN78L05	IC	1	
IC11		AN78M05F	IC	1	
IC12,13		AN78N05	IC	2	
IC501		MM74HC221AM	IC	1	
IC503		MC74HC00AF	IC	1	
IC504		MC74HC04AF	IC	1	
IC505		MC74HC157AF	IC	1	
IC801		M51272FP	IC	1	
IC951		AN78L05	IC	1	
IC952		AN79L05	IC	1	
L1		VLQEL05S101J	COIL 100UH	1	
L9		VLQEL05S101J	COIL 100UH	1	
L12		VLQ0578	COIL	1	
L13		VLQ0577	COIL	1	
L201		VLQEL05S101J	COIL 100UH	1	
L451,52		VLQEL05S101J	COIL 100UH	2	
L551,52		VLQEL05S101J	COIL 100UH	2	
L601,02		VLQEL05S470J	COIL 47UH	2	
L700		VLQEL05S101J	COIL 100UH	1	
L790		VLQEL05S150J	COIL 15UH	1	
L801		VLQEL05S101J	COIL 100UH	1	

Ref.No.		Part No.	Part Name & Description	Pcs	Remarks
L802		VLQEL05S150J	COIL 15UH	1	
L803		VLQEL05S5R6J	COIL 5.6UH	1	
L804		VLQEL05S6R8J	COIL 6.8UH	1	
L901		VLQEL05S180J	COIL 18UH	1	
L902		VLQEL05S560J	COIL 56UH	1	
Q1		2SA1022-B	TRANSISTOR CHIP	1	(B,C)
Q2		2SC2404-C	TRANSISTOR CHIP	1	(C,D)
Q3		2SD601-R	TRANSISTOR CHIP	1	(Q,R)
Q4		2SC2404-C	TRANSISTOR CHIP	1	(C,D)
Q5		2SA1022-B	TRANSISTOR CHIP	1	(B,C)
Q6		2SC2295-B	TRANSISTOR CHIP	1	(B,C)
Q7		2SB709-R	TRANSISTOR CHIP	1	(Q,R)
Q8		2SD601-R	TRANSISTOR CHIP	1	(Q,R)
Q100		2SB709-R	TRANSISTOR CHIP	1	(Q,R)
Q101		2SD601-R	TRANSISTOR CHIP	1	(Q,R)
Q102		2SB709-R	TRANSISTOR CHIP	1	(Q,R)
Q105		2SD601-R	TRANSISTOR CHIP	1	(Q,R)
Q106		2SB709-R	TRANSISTOR CHIP	1	(Q,R)
Q107		2SD601-R	TRANSISTOR CHIP	1	(Q,R)
Q108		2SB709-R	TRANSISTOR CHIP	1	(Q,R)
Q150,51		2SB709-R	TRANSISTOR CHIP	2	(Q,R)
Q200		2SB709-R	TRANSISTOR CHIP	1	(Q,R)
Q203		2SD601-R	TRANSISTOR CHIP	1	(Q,R)
Q206		2SD601-R	TRANSISTOR CHIP	1	(Q,R)
Q207		2SB709-R	TRANSISTOR CHIP	1	(Q,R)
Q208,09		2SD601-R	TRANSISTOR CHIP	2	(Q,R)
Q404,05		2SD601-R	TRANSISTOR CHIP	2	(Q,R)
Q406,07		2SC2295-B	TRANSISTOR CHIP	2	(B,C)
Q408		2SB709-R	TRANSISTOR CHIP	1	(Q,R)
Q501,02		UN2213	TRANSISTOR-RESISTOR	2	
Q601,02		2SD601-R	TRANSISTOR CHIP	2	(Q,R)
Q603		2SC2295-B	TRANSISTOR CHIP	1	(B,C)
Q604		2SB709-R	TRANSISTOR CHIP	1	(Q,R)
Q801		2SD601-R	TRANSISTOR CHIP	1	(Q,R)
Q802		2SC2295-B	TRANSISTOR CHIP	1	(B,C)
Q803		2SD601-R	TRANSISTOR CHIP	1	(Q,R)
Q805		2SD601-R	TRANSISTOR CHIP	1	(Q,R)
Q901-03		2SD601-R	TRANSISTOR CHIP	3	(Q,R)
			RESISTORS		
R6,R7		ERJ6GEYJ684	M.RESISTOR CH 1/10W 680K	2	
R8		ERJ6GEYJ123	M.RESISTOR CH 1/10W 12K	1	
R12		ERJ6GEYJ151	M.RESISTOR CH 1/10W 150	1	
R16		ERJ6GEYJ103	M.RESISTOR CH 1/10W 10K	1	
R18		ERJ6GEYJ104	M.RESISTOR CH 1/10W 100K	1	
R57		ERJ6GEYJ103	M.RESISTOR CH 1/10W 10K	1	
R100		ERJ6GEY0R00	M.RESISTOR CH 1/10W 0	1	
R101		ERJ6GEYJ561	M.RESISTOR CH 1/10W 560	1	
R102		ERJ6GEYJ471	M.RESISTOR CH 1/10W 470	1	
R103,04		ERJ6GEYJ102	M.RESISTOR CH 1/10W 1K	2	
R105		ERJ6GEYJ473	M.RESISTOR CH 1/10W 47K	1	
R106		ERJ6GEYJ681	M.RESISTOR CH 1/10W 680	1	
R107,08		ERJ6GEYJ102	M.RESISTOR CH 1/10W 1K	2	
R110		ERJ6GEYJ105	M.RESISTOR CH 1/10W 1M	1	
R111		ERJ6GEYJ331	M.RESISTOR CH 1/10W 330	1	
R112		ERJ6GEYJ681	M.RESISTOR CH 1/10W 680	1	
R113		ERJ6GEYJ272	M.RESISTOR CH 1/10W 2.7K	1	
R114		ERJ6GEYJ391	M.RESISTOR CH 1/10W 390	1	
R115		ERJ6GEYJ182	M.RESISTOR CH 1/10W 1.8K	1	
R116		ERJ6GEYJ822	M.RESISTOR CH 1/10W 8.2K	1	
R117		ERJ6GEYJ272	M.RESISTOR CH 1/10W 2.7K	1	
R118		ERJ6GEYJ221	M.RESISTOR CH 1/10W 220	1	
R119		ERJ6GEYJ330	M.RESISTOR CH 1/10W 33	1	
R120		ERJ6GEYJ333	M.RESISTOR CH 1/10W 33K	1	
R125,26		ERJ6GEYG223	M.RESISTOR CH 1/10W 22K	2	
R129		ERJ6GEYJ393	M.RESISTOR CH 1/10W 39K	1	
R130		ERJ6GEYJ184	M.RESISTOR CH 1/10W 180K	1	
R131,32		ERJ6GEYJ562	M.RESISTOR CH 1/10W 5.6K	2	
R133		ERJ6GEYJ102	M.RESISTOR CH 1/10W 1K	1	
R136		ERJ6GEYG223	M.RESISTOR CH 1/10W 22K	1	

Ref.No.		Part No.	Part Name & Description	Pcs	Remarks
R137		ERJ6GEYJ103	M.RESISTOR CH 1/10W 10K	1	
R138,39		ERJ6GEYJ102	M.RESISTOR CH 1/10W 1K	2	
R140		ERJ6GEY0R00	M.RESISTOR CH 1/10W 0	1	
R144		ERJ6GEY0R00	M.RESISTOR CH 1/10W 0	1	
R147		ERJ6GEY0R00	M.RESISTOR CH 1/10W 0	1	
R150		ERJ6GEYJ103	M.RESISTOR CH 1/10W 10K	1	
R151,52		ERJ6GEYJ102	M.RESISTOR CH 1/10W 1K	2	
R153		ERJ6GEYJ103	M.RESISTOR CH 1/10W 10K	1	
R154,55		ERJ6GEYJ102	M.RESISTOR CH 1/10W 1K	2	
R160		ERJ6GEYJ102	M.RESISTOR CH 1/10W 1K	1	
R180		ERJ6GEYJ124	M.RESISTOR CH 1/10W 120K	1	
R181		ERJ6GEYJ121		1	
R182		ERJ6GEYJ562	M.RESISTOR CH 1/10W 5.6K	1	
R183		ERJ6GEYJ682	M.RESISTOR CH 1/10W 6.8K	1	
R200		ERJ6GEY0R00	M.RESISTOR CH 1/10W 0	1	
R201		ERJ6GEYJ333	M.RESISTOR CH 1/10W 33K	1	
R202		ERJ6GEYJ330	M.RESISTOR CH 1/10W 33	1	
R204,05		ERJ6GEYJ102	M.RESISTOR CH 1/10W 1K	2	
R207		ERJ6GEYJ331	M.RESISTOR CH 1/10W 330	1	
R208		ERJ6GEYJ681	M.RESISTOR CH 1/10W 680	1	
R209		ERJ6GEYJ102	M.RESISTOR CH 1/10W 1K	1	
R217		ERJ6GEYJ221	M.RESISTOR CH 1/10W 220	1	
R218		ERJ6GEYJ822	M.RESISTOR CH 1/10W 8.2K	1	
R219		ERJ6GEYJ392	M.RESISTOR CH 1/10W 3.9K	1	
R220		ERJ6GEYJ182	M.RESISTOR CH 1/10W 1.8K	1	
R221		ERJ6GEYJ391	M.RESISTOR CH 1/10W 390	1	
R222		ERJ6GEYJ102	M.RESISTOR CH 1/10W 1K	1	
R229,30		ERJ6GEYG223	M.RESISTOR CH 1/10W 22K	2	
R231		ERJ6GEYJ393	M.RESISTOR CH 1/10W 39K	1	
R232		ERJ6GEYJ184	M.RESISTOR CH 1/10W 180K	1	
R233		ERJ6GEYJ472	M.RESISTOR CH 1/10W 4.7K	1	
R234		ERJ6GEYG223	M.RESISTOR CH 1/10W 22K	1	
R235		ERJ6GEYJ472	M.RESISTOR CH 1/10W 4.7K	1	
R236		ERJ6GEYG223	M.RESISTOR CH 1/10W 22K	1	
R237,38		ERJ6GEYJ562	M.RESISTOR CH 1/10W 5.6K	2	
R239,40		ERJ6GEYG223	M.RESISTOR CH 1/10W 22K	2	
R241		ERJ6GEYJ561	M.RESISTOR CH 1/10W 560	1	
R245		ERJ6GEYG223	M.RESISTOR CH 1/10W 22K	1	
R246		ERJ6GEYJ103	M.RESISTOR CH 1/10W 10K	1	
R250		ERJ6GEYJ102	M.RESISTOR CH 1/10W 1K	1	
R251		ERJ6GEYJ561	M.RESISTOR CH 1/10W 560	1	
R252		ERJ6GEYJ102	M.RESISTOR CH 1/10W 1K	1	
R260		ERJ6GEYJ155	M.RESISTOR CH 1/10W 1M	1	
R282		ERJ6GEYJ562	M.RESISTOR CH 1/10W 5.6K	1	
R283		ERJ6GEYJ682	M.RESISTOR CH 1/10W 6.8K	1	
R301		ERJ6GEYJ103	M.RESISTOR CH 1/10W 10K	1	
R302		ERJ6GEYJ821	M.RESISTOR CH 1/10W 820	1	
R303,04		ERJ6GEYJ102	M.RESISTOR CH 1/10W 1K	2	
R305		ERJ6GEYJ224	M.RESISTOR CH 1/10W 220K	1	
R306		ERJ6GEYJ333	M.RESISTOR CH 1/10W 33K	1	
R307,08		ERJ6GEYJ102	M.RESISTOR CH 1/10W 1K	2	
R309,10		ERJ6GEYJ101	M.RESISTOR CH 1/10W 100	2	
R311		ERJ6GEYJ122	M.RESISTOR CH 1/10W 1.2K	1	
R312		ERJ6GEYJ222	M.RESISTOR CH 1/10W 2.2K	1	
R313		ERJ6GEYJ470	M.RESISTOR CH 1/10W 47	1	
R314-16		ERJ6GEYJ222	M.RESISTOR CH 1/10W 2.2K	3	
R317		ERJ6GEYJ103	M.RESISTOR CH 1/10W 10K	1	
R318,19		ERJ6GEYJ102	M.RESISTOR CH 1/10W 1K	2	
R320		ERJ6GEYJ103	M.RESISTOR CH 1/10W 10K	1	
R321		ERJ6GEYJ102	M.RESISTOR CH 1/10W 1K	1	
R322-24		ERJ6GEYJ103	M.RESISTOR CH 1/10W 10K	3	
R328		ERJ6GEYJ681	M.RESISTOR CH 1/10W 680	1	
R329		ERJ6GEYJ470	M.RESISTOR CH 1/10W 47	1	
R330-32		ERJ6GEYJ102	M.RESISTOR CH 1/10W 1K	3	
R333		ERJ6GEY0R00	M.RESISTOR CH 1/10W 0	1	
R335		ERJ6GEY0R00	M.RESISTOR CH 1/10W 0	1	
R337		ERJ6GEY0R00	M.RESISTOR CH 1/10W 0	1	
R339		ERJ6GEY0R00	M.RESISTOR CH 1/10W 0	1	
R340		ERJ6GEYJ102	M.RESISTOR CH 1/10W 1K	1	
R342		ERJ6GEYJ103	M.RESISTOR CH 1/10W 10K	1	
R343		ERJ6GEY0R00	M.RESISTOR CH 1/10W 0	1	
R345		ERJ6GEY0R00	M.RESISTOR CH 1/10W 0	1	
R354-57		ERJ6GEY0R00	M.RESISTOR CH 1/10W 0	4	
R358		ERJ6GEYG561	M.RESISTOR CH 1/10W 560	1	
R359		ERJ6GEYG222	M.RESISTOR CH 1/10W 2.2K	1	

Ref.No.		Part No.	Part Name & Description	Pcs	Remarks
R360,61		ERJ6GEYG391	M.RESISTOR CH 1/10W 390	2	
R362		ERJ6GEYG222	M.RESISTOR CH 1/10W 2.2K	1	
R363		ERJ6GEYJ392	M.RESISTOR CH 1/10W 3.9K	1	
R407		VRE0034E681	M.RESISTOR CH 1/10W 680	1	
R409		VRE0034E181	M.RESISTOR CH 1/10W 180	1	
R410		ERJ6GEY0R00	M.RESISTOR CH 1/10W 0	1	
R411		VRE0034E152	M.RESISTOR CH 1/10W 1.5K	1	
R412		ERJ6GEYJ332	M.RESISTOR CH 1/10W 3.3K	1	
R413		ERJ6GEYJ470	M.RESISTOR CH 1/10W 47	1	
R414		ERJ6GEYJ103	M.RESISTOR CH 1/10W 10K	1	
R417		ERJ6GEYJ332	M.RESISTOR CH 1/10W 3.3K	1	
R418		VRE0034E681	M.RESISTOR CH 1/10W 680	1	
R419		VRE0034E221	M.RESISTOR CH 1/10W 220	1	
R420		ERJ6GEYJ150	M.RESISTOR CH 1/10W 15	1	
R421		ERJ6GEYJ470	M.RESISTOR CH 1/10W 47	1	
R422,23		ERJ6GEYJ102	M.RESISTOR CH 1/10W 1K	2	
R424		VRE0034E471	M.RESISTOR CH 1/10W 470	1	
R425,26		ERJ6GEYJ102	M.RESISTOR CH 1/10W 1K	2	
R427		VRE0034E221	M.RESISTOR CH 1/10W 220	1	
R428		VRE0034E471	M.RESISTOR CH 1/10W 470	1	
R429		ERJ6GEYJ332	M.RESISTOR CH 1/10W 3.3K	1	
R501		ERJ6GEYJ273	M.RESISTOR CH 1/10W 27K	1	
R502		ERJ6GEYJ104	M.RESISTOR CH 1/10W 100K	1	
R503		ERJ6GEYJ105	M.RESISTOR CH 1/10W 1M	1	
R504		ERJ6GEYJ562	M.RESISTOR CH 1/10W 5.6K	1	
R505,06		ERJ6GEYJ103	M.RESISTOR CH 1/10W 10K	2	
R507,08		ERJ6GEYJ104	M.RESISTOR CH 1/10W 100K	2	
R509		ERJ6GEY0R00	M.RESISTOR CH 1/10W 0	1	
R511,12		ERJ6GEYJ104	M.RESISTOR CH 1/10W 100K	2	
R513,14		ERJ6GEYJ391	M.RESISTOR CH 1/10W 390	2	
R601		ERJ6GEYG102	M.RESISTOR CH 1/10W 1K	1	
R602		ERJ6GEYG561	M.RESISTOR CH 1/10W 560	1	
R604		ERJ6GEYG471	M.RESISTOR CH 1/10W 470	1	
R605		ERJ6GEYJ332	M.RESISTOR CH 1/10W 3.3K	1	
R606		ERJ6GEYJ470	M.RESISTOR CH 1/10W 47	1	
R611		ERJ6GEYG102	M.RESISTOR CH 1/10W 1K	1	
R612		ERJ6GEYG561	M.RESISTOR CH 1/10W 560	1	
R614		ERJ6GEYG471	M.RESISTOR CH 1/10W 470	1	
R615		ERJ6GEYJ332	M.RESISTOR CH 1/10W 3.3K	1	
R616		ERJ6GEYJ470	M.RESISTOR CH 1/10W 47	1	
R617,18		ERJ6GEYJ102	M.RESISTOR CH 1/10W 1K	2	
R619		VRE0034E221	M.RESISTOR CH 1/10W 220	1	
R620		ERJ6GEYJ821	M.RESISTOR CH 1/10W 820	1	
R621		ERJ6GEYJ332	M.RESISTOR CH 1/10W 3.3K	1	
R622		ERJ6GEYJ470	M.RESISTOR CH 1/10W 47	1	
R704		ERJ6GEYJ103	M.RESISTOR CH 1/10W 10K	1	
R705		ERJ6GEYJ183	M.RESISTOR CH 1/10W 18K	1	
R709		ERJ6GEYG682	M.REISITOR CH 1/10W 6.8K	1	
R710		ERJ6GEYG153	M.RESISTOR CH 1/10W 15K	1	
R711		ERJ6GEYG333	M.RESISTOR CH 1/10W 33K	1	
R712		ERJ6GEYG682	M.REISITOR CH 1/10W 6.8K	1	
R713		ERJ6GEYG153	M.RESISTOR CH 1/10W 15K	1	
R714		ERJ6GEYG333	M.RESISTOR CH 1/10W 33K	1	
R720,21		ERJ6GEYJ103	M.RESISTOR CH 1/10W 10K	2	
R750		ERJ6GEYJ334	M.RESISTOR CH 1/10W 330K	1	
R802		VRE0034E273	M.RESISTOR CH 1/10W 27K	1	
R803		VRE0034E183	M.RESISTOR CH 1/10W 18K	1	
R804		ERJ6GEYJ332	M.RESISTOR CH 1/10W 3.3K	1	
R805		ERJ6GEYJ103	M.RESISTOR CH 1/10W 10K	1	
R806		ERJ6GEYJ472	M.RESISTOR CH 1/10W 4.7K	1	
R807		VRE0034E183	M.RESISTOR CH 1/10W 18K	1	
R808		VRE0034E273	M.RESISTOR CH 1/10W 27K	1	
R809		ERJ6GEYJ470	M.RESISTOR CH 1/10W 47	1	
R810		ERJ6GEYJ103	M.RESISTOR CH 1/10W 10K	1	
R811		VRE0034E301	M.RESISTOR CH 1/10W 300	1	
R812		VRE0034E151	M.RESISTOR CH 1/10W 150	1	
R813		VRE0034E561	M.RESISTOR CH 1/10W 560	1	
R814		ERJ6GEYJ470	M.RESISTOR CH 1/10W 47	1	
R815		ERJ6GEYJ102	M.RESISTOR CH 1/10W 1K	1	
R816		ERJ6GEYJ122	M.RESISTOR CH 1/10W 1.2K	1	
R818		ERJ6GEYJ332	M.RESISTOR CH 1/10W 3.3K	1	
R819		ERJ6GEYJ681	M.RESISTOR CH 1/10W 680	1	
R820		ERJ6GEYJ221	M.RESISTOR CH 1/10W 220	1	
R821		ERJ6GEYJ471	M.RESISTOR CH 1/10W 470	1	
R822		VRE0034E181	M.RESISTOR CH 1/10W 180	1	

Ref.No.		Part No.	Part Name & Description	Pcs	Remarks
R831		ERJ6GEYJ151	M.RESISTOR CH 1/10W 150	1	
R832		ERJ6GEYJ821	M.RESISTOR CH 1/10W 820	1	
R833		ERJ6GEYJ152	M.RESISTOR CH 1/10W 1.5K	1	
R834		ERJ6GEYJ330	M.RESISTOR CH 1/10W 33	1	
R901		ERJ6GEYG471	M.RESISTOR CH 1/10W 470	1	
R902		ERJ6GEYG221	M.RESISTOR CH 1/10W 220	1	
R903		ERJ6GEYG271	M.RESISTOR CH 1/10W 270	1	
R904		ERJ6GEYJ470	M.RESISTOR CH 1/10W 47	1	
R905		ERJ6GEYJ332	M.RESISTOR CH 1/10W 3.3K	1	
R906		ERJ6GEYJ391	M.RESISTOR CH 1/10W 390	1	
R907		ERJ6GEYJ821	M.RESISTOR CH 1/10W 820	1	
R908		ERJ6GEYJ562	M.RESISTOR CH 1/10W 5.6K	1	
R909		ERJ6GEYJ822	M.RESISTOR CH 1/10W 8.2K	1	
R910		ERJ6GEYJ332	M.RESISTOR CH 1/10W 3.3K	1	
R911		ERJ6GEY0R00	M.RESISTOR CH 1/10W 0	1	
R912		VRE0034E471	M.RESISTOR CH 1/10W 470	1	
R913		VRE0034E682	M.RESISTOR CH 1/10W 6.8K	1	
R914		VRE0034E822	M.RESISTOR CH 1/10W 8.2K	1	
R915		ERJ6GEYJ332	M.RESISTOR CH 1/10W 3.3K	1	
TP3		VJR0548	TEST POINT	1	
TP10,11		VJR0548	TEST POINT	2	
TP39		VJR0548	TEST POINT	1	
TP501		VJR0548	TEST POINT	1	
TP801		VJR0548	TEST POINT	1	
VC501		VCV0042	TRIMMER 50V 25P	1	
VR2		VRV0109B103	V.RESISTOR 10K	1	
VR3		VRV0109B202	V.RESISTOR 2K	1	
VR7		VRV0109B502	V.RESISTOR 5K	1	
VR8,R9		VRV0109B501	V.RESISTOR 500	2	
VR801,02		VRV0109B102	V.RESISTOR 1K	2	
VR901		VRV0109B202	V.RESISTOR 2K	1	
X1		VSX0544	CRYSTAL OSCILLATOR	1	
X2		VSX0542	CRYSTAL OSCILLATOR	1	
X3		VSX0544	CRYSTAL OSCILLATOR	1	
X4		VSX0542	CRYSTAL OSCILLATOR	1	
X501		VSX0126	CRYSTAL OSCILLATOR	1	
			MISCELLANEOUS		
		VMP2738	HOLDER ANGLE	1	
		VSC2489	SHIELD CASE	1	
		VSC2490	SHIELE CASE	1	
		XTV3+6F	SCREW	2	
	■	VEP81058A	P.C.BOARD W/COMPONENT		FOR AU-65H,AU-6 3H
			POWER FILTER		AU-62H
			CAPACITORS		
C2		ECQU2A224MN	P.CAPACITOR 250V 0.22U	1	
C3-C6		VCK0046	C.CAPACITOR	4	
C7		ECQU2A224MN	P.CAPACITOR 250V 0.22U	1	

Ref.No.		Part No.	Part Name & Description	Pcs	Remarks
F1		XBA2C63TB0	FUSE 6.3A 250V	1	
L1		VLF0930	COIL	1	
POWER20-22		VJP2638	CONNECTOR (MALE)	3	
			RESISTORS		
R1		ERG2SJ104	M.RESISTOR 2W 100K	1	
			MISCELLANEOUS		
		VJF0318	FUSE HOLDER	2	
		VMZ0730	CAPACITANCE COVER	4	
		VMZ1305	CAPACITANCE COVER	2	
	■	VYK3637	P.C.BOARD W/COMPONENT		FOR AU-65H,AU-63H
			POWER SUPPLY UNIT		AU-62H
			CAPACITORS		
C1		ECQU2A224MT	P.CAPACITOR AC250V 0.22U	1	
C2		ECQU2A224MT	P.CAPACITOR AC250V 0.22U	1	
C3		ECQB1H473KF	P.CAPACITOR 50V 0.047U	1	
C4,C5		ECQV1J105JZ	P.CAPACITOR 1U	2	
C6,C7		ECKDRS222ME	C.CAPACITOR AC400V 2200P	2	
C8,C9		ECOS2EA681EA	E.CAPACITOR 250V 680U	2	
C10		ECQE6104KF	P.CAPACITOR 630V 0.1UF	1	
C11		ECQB1H333KF	P.CAPACITOR 50V 0.033U	1	
C12		ECKD3A471KBP	C.CAPACITOR 1KV 470U	1	
C13		ECQV1J105JZ	P.CAPACITOR 1U	1	
C14		ECEA1VFE101	E.CAPACITOR 35V 100U	1	
C15		ECKD3A471KBP	C.CAPACITOR 1KV 470U	1	
C16		ECQV1J105JZ	P.CAPACITOR 63V 1UF	1	
C17		ECKD3A101KBP	C.CAPACITOR 1KV 100U	1	
C18,19		ECKDRS222ME	C.CAPACITOR AC400V 2200P	2	
C20		ECQB1H683KF	P.CAPACITOR 50V 0.068U	1	
C51		ECKD3A102KBP	C.CAPACITOR 1KV 1000P	1	
C52		ECKD3A681KBP	C.CAPACITOR 1KV 680U	1	
C53		ECEA1VFE102	E.CAPACITOR 35V 1000U	1	
C54		ECQB1H152KF	P.CAPACITOR 50V 1500P	1	
C55		ECQB1H102KF	P.CAPACITOR 50V 1000P	1	
C56		ECKD3A102KBP	C.CAPACITOR 1KV 1000P	1	
C57		ECKD3A681KBP	C.CAPACITOR 1KV 680U	1	
C58		ECA1AFQ102L	E.CAPACITOR 10V 1000U	1	
C59		ECEA1AFE152	E.CAPACITOR 10V 1500U	1	
C60		ECEA1HFE331	E.CAPACITOR 50V 330U	1	
C61		ECEA1EFE221	E.CAPACITOR 25V 220U	1	
C62,63		ECQB1H102KF	P.CAPACITOR 50V 1000P	2	
C64,65		ECKD3A681KBP	C.CAPACITOR 1KV 680U	2	
C66		ECEA1VFE102	E.CAPACITOR 25V 1000U	1	
C67		ECQB1H102KF	P.CAPACITOR 50V 1000P	1	
C68,69		ECKD3A681KBP	C.CAPACITOR 1KV 680U	2	
C70		ECEA1EFE681	E.CAPACITOR 25V 680U	1	
C71		ECEA1EFE471	E.CAPACITOR 25V 470U	1	
C72		ECQB1H102KF	P.CAPACITOR 50V 1000P	1	
C89		ECEA1HFE270	E.CAPACITOR 50V 27U	1	
C90		ECA1EKF100	E.CAPACITOR 25V 10U	1	
C91		ECEA1EFE471	E.CAPACITOR 25V 470U	1	
C92		ECQB1H222KF	P.CAPACITOR 50V 2200P	1	
C93		ECQB1H102KF	P.CAPACITOR 50V 1000P	1	
C94		ECQB1H473KF	P.CAPACITOR 50V 0.047U	1	
C95		ECQV1H224JZ	P.CAPACITOR 50V 0.22U	1	
C96		ECQB1H103KF	P.CAPACITOR 50V 0.01U	1	
CP1		VJP2824B004	CONNECTOR (MALE)	1	
CP2		VJP3015	CONNECTOR (MALE)	1	
CP51		VJP2824B006	CONNECTOR (MALE)	1	
CP52		VJP2824B007	CONNECTOR (MALE)	1	
CP53		VJP2824B008	CONNECTOR (MALE)	1	
CP54		VJP3016	CONNECTOR (MALE)	1	
CR1		AC08FGM	DIODE	1	
CR2		ERB44-06	DIODE	1	
CR3		RD75EB	ZENER	1	
CR4,R5		RD68EB	ZENER	2	
CR6		RD12EB2	DIODE	1	
CR7		RBV606	DIODE	1	
CR8,R9		1SS118	DIODE	2	
CR10		AC08FGM	DIODE	1	
CR11		N413	DIODE	1	
CR12		11DF2	DIODE	1	
CR13		ERB37-10	DIODE	1	
CR14		11DF2	DIODE	1	
CR15,16		ERB37-10	DIODE	2	
CR51		ESAC92M-03	DIODE	1	
CR52		CTB-34	DIODE	1	
CR53,54		1SS120	DIODE	3	
CR55		11DF2	DIODE	1	
CR56		RD13EB2	ZENER	1	
CR57		1SS120	DIODE	1	
CR58		RD9.1ESB2	ZENER	1	
CR59		RD39ESB2	ZENER	1	
F1		EYP2BN098	FUSE	1	
L1		VLF0930	COIL	1	
Q1		2SA1015Y	TRANSISTOR	1	
Q2		2SA562TMY	TRANSISTOR	1	
Q3		2SA1015Y	TRANSISTOR	1	
Q53		2SC2655Y	TRANSISTOR	1	
Q54		2SC1815Y	TRANSISTOR	1	
Q56		2SC1815Y	TRANSISTOR	1	
Q57		2SC2655Y	TRANSISTOR	1	
Q58		2SA1015Y	TRANSISTOR	1	
Q59		2SC1815Y	TRANSISTOR	1	
Q60		2SC1815Y	TRANSISTOR	1	
			RESISTORS		
R1		ERF5RJ220	W.RESISTOR 5W 22	1	
R2		ERDS2FJ102	C.RESISTOR 1/4W 1K	1	
R3		ERDS2FJ104	C.RESISTOR 1/4W 100K	1	
R4		ERDS2FJ473	C.RESISTOR 1/4W 47K	1	
R5		ERDS2FJ472	C.RESISTOR 1/4W 4.7K	1	
R6		ERD25FJ124	C.RESISTOR 1/4W 120K	1	
R7		ERDS2FJ105	C.RESISTOR 1/4W 1M	1	
R8		ERDS2FJ103	C.RESISTOR 1/4W 10K	1	
R9		ERDS2FJ473	C.RESISTOR 1/4W 47K	1	
R10		ERDS2FJ102	C.RESISTOR 1/4W 1K	1	
R11		ERG2SJ120	M.RESISTOR 2W 12	1	

Ref.No.		Part No.	Part Name & Description	Pcs	Remarks
R12		ERX2SJ3R9	M.RESISTOR 2W 3.9	1	
R13		ERD25FJ102	C.RESISTOR 1/4W 1K	1	
R14		ERG2SJ330	M.RESISTOR 2W 33	1	
R15,16		ERD50FJ184	C.RESISTOR 1/4W 180K	2	
R17,18		ERD50FJ104	C.RESISTOR 1/2W 100K	2	
R19		ERDS2FJ471	C.RESISTOR 1/4W 470	1	
R20		ERDS2FJ2R2	C.RESISTOR 1/4W 2.2	1	
R21		ERF5RJ220	W.RESISTOR 5W 22	1	
R22		ERD50FJ100	C.RESISTOR 1/2W 10	1	
R23		ERD50FJ150	C.RESISTOR 1/2W 15	1	
R24		ERD50FJ471	C.RESISTOR 1/2W 470	1	
R25		ERF5RJ220	W.RESISTOR 5W 22	1	
R26		ERDS2FJ471	C.RESISTOR 1/6W 470	1	
R27		ERDS2FJ2R2	C.RESISTOR 1/4W 2.2	1	
R28		ERD50FJ150	C.RESISTOR 1/2W 15	1	
R29		ERD50FJ471	C.RESISTOR 1/2W 470	1	
R30		ERD50FJ100	C.RESISTOR 1/2W 10	1	
R31		ERD25FJ124	C.RESISTOR 1/4W 120K	1	
R32		ERD50FJ105	C.RESISTOR 1/4W 1M	1	
R33		ERG2SJ330	M.RESISTOR 2W 33	1	
R34		ERDS2FJ102	C.RESISTOR 1/4W 1K	1	
R35		ERD25FJ221	C.RESISTOR 1/4W 220	1	
R51,52		ERD50FJ100	C.RESISTOR 1/2W 10	2	
R53		ERF5RJ221	W.RESISTOR 5W 220	1	
R54		ERG1ANJ470	M.RESISTOR 1W 47	1	
R55		EROS2CHF1000	M.RESISTOR 1/6W 100	1	
R56		EROS2CHF39R0	M.RESISTOR 1/6W 39	1	
R57,58		ERD50FJ100	C.RESISTOR 1/2W 10	2	
R59-61		ERD50FJ101	C.RESISTOR 1/2W 100	3	
R62,63		ERD50FJ122	C.RESISTOR 1/2W 1.2K	2	
R64		ERDS2FJ471	C.RESISTOR 1/4W 470	1	
R65		ERD25FJ471	C.RESISTOR 1/4W 470	1	
R66		EROS2CHF4702	M.RESISTOR 1/4W 47K	1	
R67		EROS2CHF1802	M.RESISTOR 1/4W 18K	1	
R68		ERDS2FJ101	C.RESISTOR 1/4W 100	1	
R69,70		ERDS2FJ102	C.RESISTOR 1/4W 1K	2	
R71		ERD25FJ6R8	C.RESISTOR 1/4W 6.8K	1	
R72		ERD50FJ102	C.RESISTOR 1/2W 1K	1	
R73		ERDS2FJ331	C.RESISTOR 1/4W 330	1	
R74		ERDS2FJ102	C.RESISTOR 1/4W 1K	1	
R75		ERDS2FJ222	C.RESISTOR 1/4W 2.2K	1	
R76		ERDS2FJ912	C.RESISTOR 1/4W 9.1K	1	
R77		EROS2CHF1201	M.RESISTOR 1/4W 1.2K	1	
R78		ERDS2FJ102	C.RESISTOR 1/4W 1K	1	
R79		ERDS2FJ223	C.RESISTOR 1/4W 22K	1	
R80		ERDS2FJ104	C.RESISTOR 1/4W 100K	1	
R81		VRV0112B102	V.RESISTOR 1/2W 1K	1	
R82		EROS2CHF1801	M.RESISTOR 1/4W 1.8K	1	
R83		EROS2CHF6800	M.RESISTOR 1/4W 680	1	
R84		ERDS2FJ222	C.RESISTOR 1/4W 2.2K	1	
R85		VRT0029	THERMISTER	1	
R86		ERDS2FJ332	C.RESISTOR 1/4W 3.3K	1	
R87		ERDS2FJ222	C.RESISTOR 1/4W 2.2K	1	
R89		ERDS2FJ103	C.RESISTOR 1/4W 10K	1	
R90		ERDS2FJ222	C.RESISTOR 1/4W 2.2K	1	
R91		EROS2CHF1800	M.RESISTOR 1/4W 180	1	
R92,93		ERD50FJ100	C.RESISTOR 1/2W 10	2	
R94		ERD50FJ122	C.RESISTOR 1/2W 1.2K	1	
R95		EROS2CHF1500	M.RESISTOR 1/4W 150	1	
R96,97		ERD50FJ100	C.RESISTOR 1/2W 10	2	
R98		ERD50FJ102	C.RESISTOR 1/2W 1K	1	
R99		ERDS2FJ102	C.RESISTOR 1/4W 1K	1	
R100		EROS2CHF2700	M.RESISTOR 1/4W 270	1	
R101,02		ERD50FJ100	C.RESISTOR 1/2W 10	2	
R103		ERD50FJ471	C.RESISTOR 1/2W 470	1	
R104		EROS2CHF2700	M.RESISTOR 1/4W 270	1	
R105		ERD50FJ102	C.RESISTOR 1/2W 1K	1	
R106		ERD50FJ561	C.RESISTOR 1/2W 560	1	
R107		EROS2CHF2700	M.RESISTOR 1/4W 270	1	
R108		ERD25FJ471	C.RESISTOR 1/4W 470	1	
R109		EROS2CHF4702	M.RESISTOR 1/4W 47K	1	
R110		EROS2CHF2202	M.RESISTOR 1/4W 22K	1	
R111		ERDS2FJ471	C.RESISTOR 1/4W 470	1	
R112		ERD25FJ6R8	C.RESISTOR 1/4W 6.8K	1	
R113		ERD50FJ681	C.RESISTOR 1/2W 680	1	

Ref.No.		Part No.	Part Name & Description	Pcs	Remarks
R114		ERDS2FJ331	C.RESISTOR 1/4W 330	1	
R115		ERDS2FJ102	C.RESISTOR 1/4W 1K	1	
R116		ERDS2FJ331	C.RESISTOR 1/4W 330	1	
R117		ERDS2FJ471	C.RESISTOR 1/4W 470	1	
R118		EROS2CHF2201	M.RESISTOR 1/4W 2.2K	1	
R119		EROS2CHF1501	M.RESISTOR 1/4W 1.5K	1	
R120		ERDS2FJ223	C.RESISTOR 1/4W 22K	1	
R121		EROS2CHF1201	M.RESISTOR 1/4W 1.2K	1	
R122		VRV0112B102	V.RESISTOR 1/2W 1K	1	
R123		EROS2CHF3301	M.RESISTOR 1/4W 3.3K	1	
R124		ERDS2FJ121	C.RESISTOR 1/4W 120	1	
R125		EROS2CHF1101	M.RESISTOR 1/4W 1.1K	1	
R126-29		ERD50FJ100	C.RESISTOR 1/2W 10	4	
R130		EROS2CHF6800	M.RESISTOR 1/4W 680	1	
R131,32		ERDS2FJ332	C.RESISTOR 1/4W 3.3K	2	
R134		ERDS2FJ103	C.RESISTOR 1/4W 10K	1	
R135		ERDS2FJ562	C.RESISTOR 1/4W 5.6K	1	
R136		ERDS2FJ102	C.RESISTOR 1/4W 1K	1	
R137		ERDS2FJ392	C.RESISTOR 1/4W 3.9K	1	
R138		ERDS2FJ102	C.RESISTOR 1/4W 1K	1	
R139		ERDS2FJ101	C.RESISTOR 1/4W 100	1	
R140,41		ERDS2FJ102	C.RESISTOR 1/4W 1K	2	
R142		ERDS2FJ182	C.RESISTOR 1/4W 1.8K	1	
R143		ERDS2FJ222	C.RESISTOR 1/4W 2.2K	1	
R144		ERF5RJ221	W.RESISTOR 5W 220	1	
R146		EROS2CHF3000	M.RESISTOR 1/4W 300	1	
T1		VTP0324	TRANSFORMER	1	
T2		VTP0325	TRANSFORMER	1	
T3,T4		VTP0326	TRANSFORMER	2	
T51-57		VLT0630	TRANSFORMER	7	
			MISCELLANEOUS		
		VHD0601	SCREW	4	
		VMP2697	SUPPORT	2	
		VMZ1609	INSULATOR	2	
		VMZ1610	INSULATOR	2	
		VSC3125	COOLING BODY	1	
		VSC3136	INSULATOR	1	
		VSC3400	COOLING BODY	2	
		XNG3E5	SCREW (NUT)	2	
		XNG3ES	NUT	1	
		XYNV3+K8	SCREW	2	
		XYNV3+K8	SCREW	10	
	■	VEP85015D	P.C.BOARD W/COMPONENT		FOR AU-65H
			RA & HA		
			CAPACITORS		
C1		ECEA1HUR33	E.CAPACITOR 50V 0.33U	1	
C2		ECEA1CU100	E.CAPACITOR 16V 10U	1	
C3		ECUM1H103KBN	C.CAPACITOR CH 50V 0.01U	1	
C4		ECEA1HUR33	E.CAPACITOR 50V 0.33U	1	
C5		ECEA1CU100	E.CAPACITOR 16V 10U	1	
C6		ECUM1H103KBN	C.CAPACITOR CH 50V 0.01U	1	
C7		ECEA1AU101	E.CAPACITOR 10V 100U	1	
C17		ECEA1AU101	E.CAPACITOR 10V 100U	1	
C27-30		ECUM1E104ZFN	C.CAPACITOR CH 25V 0.1U	4	
C31-39		ECUM1H103KBN	C.CAPACITOR CH 50V 0.01U	9	
C40		ECUM1E104ZFN	C.CAPACITOR CH 25V 0.1U	1	
C41		ECUM1H103KBN	C.CAPACITOR CH 50V 0.01U	1	

Ref.No.		Part No.	Part Name & Description	Pcs	Remarks
C42		ECUM1E104ZFN	C.CAPACITOR CH 25V 0.1U	1	
C43		ECUM1H103KBN	C.CAPACITOR CH 50V 0.01U	1	
C44		ECUM1E104ZFN	C.CAPACITOR CH 25V 0.1U	1	
C45		ECUM1H103KBN	C.CAPACITOR CH 50V 0.01U	1	
C46,47		ECUM1E104ZFN	C.CAPACITOR CH 25V 0.1U	2	
C48		ECUM1H220JCN	C.CAPACITOR CH 50V 22P	1	
C50		ECUM1E104ZFN	C.CAPACITOR CH 25V 0.1U	1	
C51		ECUM1H220JCN	C.CAPACITOR CH 50V 22P	1	
C53		ECUM1E104ZFN	C.CAPACITOR CH 25V 0.1U	1	
C54		ECUM1H220JCN	C.CAPACITOR CH 50V 22P	1	
C56		ECUM1E104ZFN	C.CAPACITOR CH 25V 0.1U	1	
C57		ECUM1H220JCN	C.CAPACITOR CH 50V 22P	1	
C59		ECUM1H103KBN	C.CAPACITOR CH 50V 0.01U	1	
C60		ECEA1AU101	E.CAPACITOR 10V 100U	1	
C61,62		ECUM1E104ZFN	C.CAPACITOR CH 25V 0.1U	2	
C63		ECUM1H103KBN	C.CAPACITOR CH 50V 0.01U	1	
C64		ECEA1AU101	E.CAPACITOR 10V 100U	1	
C65,66		ECUM1E104ZFN	C.CAPACITOR CH 25V 0.1U	2	
C67		ECUM1H103KBN	C.CAPACITOR CH 50V 0.01U	1	
C68		ECEA1AU101	E.CAPACITOR 10V 100U	1	
C69,70		ECUM1E104ZFN	C.CAPACITOR CH 25V 0.1U	2	
C71		ECUM1H103KBN	C.CAPACITOR CH 50V 0.01U	1	
C72		ECEA1AU101	E.CAPACITOR 10V 100U	1	
C73,74		ECUM1E104ZFN	C.CAPACITOR CH 25V 0.1U	2	
C75-78		ECEA1CU470	E.CAPACITOR 16V 47U	4	
C79		ECUM1H103KBN	C.CAPACITOR CH 50V 0.01U	1	
C80		ECEA1EU470	E.CAPACITOR 25V 47U	1	
C81-86		ECCD2H330JC	C.CAPACITOR 500V 33P	6	
C87		ECEA1EU470	E.CAPACITOR 25V 47U	1	
C88		ECUM1H103KBN	C.CAPACITOR CH 50V 0.01U	1	
C201		ECUM1H103KBN	C.CAPACITOR CH 50V 0.01U	1	
C202		ECEA1EU100	E.CAPACITOR 25V 10U	1	
C203		ECUM1H103KBN	C.CAPACITOR CH 50V 0.01U	1	
C204		ECSF0JE106	T.CAPACITOR 6.3V 10U	1	
C205		ECUM1H103KBN	C.CAPACITOR CH 50V 0.01U	1	
C206		ECUM1E104ZFN	C.CAPACITOR CH 25V 0.1U	1	
C207		ECEA1CU470	E.CAPACITOR 16V 47U	1	
C208,09		ECUM1H103KBN	C.CAPACITOR CH 50V 0.01U	2	
C210		ECEA1EU100	E.CAPACITOR 25V 10U	1	
C211		ECUM1H103KBN	C.CAPACITOR CH 50V 0.01U	1	
C212		ECSF0JE106	T.CAPACITOR 6.3V 10U	1	
C213		ECUM1H103KBN	C.CAPACITOR CH 50V 0.01U	1	
C214		ECUM1E104ZFN	C.CAPACITOR CH 25V 0.1U	1	
C215		ECEA1CU470	E.CAPACITOR 16V 47U	1	
C216,17		ECUM1H103KBN	C.CAPACITOR CH 50V 0.01U	2	
C218		ECEA1EU100	E.CAPACITOR 25V 10U	1	
C219		ECUM1H103KBN	C.CAPACITOR CH 50V 0.01U	1	
C220		ECSF0JE106	T.CAPACITOR 6.3V 10U	1	
C221		ECUM1H103KBN	C.CAPACITOR CH 50V 0.01U	1	
C222		ECUM1E104ZFN	C.CAPACITOR CH 25V 0.1U	1	
C223		ECEA1CU470	E.CAPACITOR 16V 47U	1	
C224,25		ECUM1H103KBN	C.CAPACITOR CH 50V 0.01U	2	
C226		ECEA1EU100	E.CAPACITOR 25V 10U	1	
C227		ECUM1H103KBN	C.CAPACITOR CH 50V 0.01U	1	
C228		ECSF0JE106	T.CAPACITOR 6.3V 10U	1	
C229		ECUM1H103KBN	C.CAPACITOR CH 50V 0.01U	1	
C230		ECUM1E104ZFN	C.CAPACITOR CH 25V 0.1U	1	
C231		ECEA1CU470	E.CAPACITOR 16V 47U	1	
C232		ECUM1H103KBN	C.CAPACITOR CH 50V 0.01U	1	
C233,34		ECEA1CU470	E.CAPACITOR 16V 47U	2	
C235,36		ECUM1E104ZFN	C.CAPACITOR CH 25V 0.1U	2	
CN81		VJP3079	CONNECTOR (MALE)	1	
CN82		VJP1233R	CONNECTOR(MALE) 6P	1	
CN83		VJP1233T	CONNECTOR(MALE) 6P	1	
CN84		VJP1233G	CONNECTOR(MALE) 6P	1	
CN85		VJP1233T	CONNECTOR(MALE) 6P	1	
CN86		VJP1233G	CONNECTOR(MALE) 6P	1	
CN87		VJP1233T	CONNECTOR(MALE) 6P	1	
D201		MA151K	DIODE	1	

Ref.No.		Part No.	Part Name & Description	Pcs	Remarks
IC1		AN78N05	IC	1	
IC2		AN79N05	IC	1	
IC7-C9		AN6308S	IC	3	
IC10		AN6308S	IC	1	
IC11-14		NJM592M8	IC	4	
IC201-04		NJM592M8	IC	4	
IC205		AN78N09	IC	1	
L1-L6		VLQEL05S101K	COIL 100UH	6	
L7-L9		VLQEL05S470K	COIL 47UH	3	
L10		VLQEL05S470K	COIL 47UH	1	
L11,12		VLQEL05S101K	COIL 100UH	2	
L13,14		VLQ0211M2R7	COIL	2	
L201-05		VLQEL05S101K	COIL 100UH	5	
Q5-Q8		2SC2295-B	TRANSISTOR CHIP	4	(B,C)
Q9		2SC2851	TRANSISTOR	1	
Q10-16		2SC2851	TRANSISTOR	7	
Q17-23		2SB789-Q	TRANSISTOR	7	<R>
Q201		2SC3757	TRANSISTOR	1	(Q,R)
Q202,03		2SK316	TRANSISTOR	2	(Q)
Q204,05		2SC3757	TRANSISTOR	2	(Q,R)
Q206,07		2SK316	TRANSISTOR	2	(Q)
Q208,09		2SC3757	TRANSISTOR	2	(Q,R)
Q210,11		2SK316	TRANSISTOR	2	(Q)
Q212,13		2SC3757	TRANSISTOR	2	(Q,R)
Q214,15		2SK316	TRANSISTOR	2	(Q)
Q216		2SC3757	TRANSISTOR	1	(Q,R)
Q217		2SD602	TRANSISTOR CHIP	1	(Q,R,S)
Q218		UN2213	TRANSISTOR-RESISTOR	1	
Q219		2SB643	TRANSISTOR	1	
Q220,21		2SD602	TRANSISTOR CHIP	2	(Q,R,S)
Q222-25		2SC3757	TRANSISTOR	4	(Q,R)
			RESISTORS		
R8		ERJ6GEYJ750	M.RESISTOR CH 1/10W 75	1	
R16		ERJ6GEYJ750	M.RESISTOR CH 1/10W 75	1	
R21,22		ERJ6GEYJ470	M.RESISTOR CH 1/10W 47	2	
R27,28		ERJ6GEYJ470	M.RESISTOR CH 1/10W 47	2	
R29		ERJ6GEYJ103	M.RESISTOR CH 1/10W 10K	1	
R30		ERJ6GEYJ122	M.RESISTOR CH 1/10W 1.2K	1	
R31		ERJ6GEYJ103	M.RESISTOR CH 1/10W 10K	1	
R32		ERJ6GEYJ122	M.RESISTOR CH 1/10W 1.2K	1	
R33		ERJ6GEYJ103	M.RESISTOR CH 1/10W 10K	1	
R34		ERJ6GEYJ122	M.RESISTOR CH 1/10W 1.2K	1	
R35		ERJ6GEYJ103	M.RESISTOR CH 1/10W 10K	1	
R36		ERJ6GEYJ122	M.RESISTOR CH 1/10W 1.2K	1	
R37		ERJ6GEYJ222	M.RESISTOR CH 1/10W 2.2K	1	
R38		ERJ6GEYJ471	M.RESISTOR CH 1/10W 470	1	
R39		ERJ6GEYJ151	M.RESISTOR CH 1/10W 150	1	
R40		ERJ6GEYJ471	M.RESISTOR CH 1/10W 470	1	
R41		ERJ6GEYJ101	M.RESISTOR CH 1/10W 100	1	
R42		ERJ6GEYJ681	M.RESISTOR CH 1/10W 680	1	
R43,44		ERJ6GEYJ222	M.RESISTOR CH 1/10W 2.2K	2	
R45,46		ERJ6GEYJ470	M.RESISTOR CH 1/10W 47	2	
R47		ERJ6GEYJ222	M.RESISTOR CH 1/10W 2.2K	1	
R48		ERJ6GEYJ471	M.RESISTOR CH 1/10W 470	1	
R49		ERJ6GEYJ151	M.RESISTOR CH 1/10W 150	1	
R50		ERJ6GEYJ471	M.RESISTOR CH 1/10W 470	1	
R51		ERJ6GEYJ101	M.RESISTOR CH 1/10W 100	1	
R52		ERJ6GEYJ681	M.RESISTOR CH 1/10W 680	1	
R53,54		ERJ6GEYJ222	M.RESISTOR CH 1/10W 2.2K	2	
R55,56		ERJ6GEYJ470	M.RESISTOR CH 1/10W 47	2	
R57		ERJ6GEYJ222	M.RESISTOR CH 1/10W 2.2K	1	
R58		ERJ6GEYJ471	M.RESISTOR CH 1/10W 470	1	
R59		ERJ6GEYJ151	M.RESISTOR CH 1/10W 150	1	

Ref.No.		Part No.	Part Name & Description	Pcs	Remarks
R60		ERJ6GEYJ471	M.RESISTOR CH 1/10W 470	1	
R61		ERJ6GEYJ101	M.RESISTOR CH 1/10W 100	1	
R62		ERJ6GEYJ681	M.RESISTOR CH 1/10W 680	1	
R63,64		ERJ6GEYJ222	M.RESISTOR CH 1/10W 2.2K	2	
R65,66		ERJ6GEYJ470	M.RESISTOR CH 1/10W 47	2	
R67		ERJ6GEYJ222	M.RESISTOR CH 1/10W 2.2K	1	
R68		ERJ6GEYJ471	M.RESISTOR CH 1/10W 470	1	
R69		ERJ6GEYJ151	M.RESISTOR CH 1/10W 150	1	
R70		ERJ6GEYJ471	M.RESISTOR CH 1/10W 470	1	
R71		ERJ6GEYJ101	M.RESISTOR CH 1/10W 100	1	
R72		ERJ6GEYJ681	M.RESISTOR CH 1/10W 680	1	
R73,74		ERJ6GEYJ222	M.RESISTOR CH 1/10W 2.2K	2	
R75,76		ERJ6GEYJ470	M.RESISTOR CH 1/10W 47	2	
R77		ERJ6GEYJ152	M.RESISTOR CH 1/10W 1.5K	1	
R78		ERJ6GEYJ102	M.RESISTOR CH 1/10W 1K	1	
R79		ERDS2TJ470	C.RESISTOR 1/4W 47	1	
R80		ERJ6GEYJ680	M.RESISTOR CH 1/10W 68	1	
R81		ERDS2TJ470	C.RESISTOR 1/4W 47	1	
R82		ERJ6GEYJ102	M.RESISTOR CH 1/10W 1K	1	
R83		ERJ6GEYJ152	M.RESISTOR CH 1/10W 1.5K	1	
R84		ERJ6GEYJ102	M.RESISTOR CH 1/10W 1K	1	
R85,86		ERJ6GEYJ331	M.RESISTOR CH 1/10W 330	2	
R87		ERJ6GEYJ152	M.RESISTOR CH 1/10W 1.5K	1	
R88		ERJ6GEYJ102	M.RESISTOR CH 1/10W 1K	1	
R89		ERDS2TJ470	C.RESISTOR 1/4W 47	1	
R90		ERJ6GEYJ680	M.RESISTOR CH 1/10W 68	1	
R91		ERDS2TJ470	C.RESISTOR 1/4W 47	1	
R92		ERJ6GEYJ751	M.RESISTOR CH 1/10W 750	1	
R93		ERJ6GEYJ152	M.RESISTOR CH 1/10W 1.5K	1	
R94		ERJ6GEYJ102	M.RESISTOR CH 1/10W 1K	1	
R95,96		ERJ6GEYJ331	M.RESISTOR CH 1/10W 330	2	
R97		ERJ6GEYJ152	M.RESISTOR CH 1/10W 1.5K	1	
R98		ERJ6GEYJ102	M.RESISTOR CH 1/10W 1K	1	
R99		ERDS2TJ470	C.RESISTOR 1/4W 47	1	
R100		ERJ6GEYJ680	M.RESISTOR CH 1/10W 68	1	
R101		ERDS2TJ470	C.RESISTOR 1/4W 47	1	
R102		ERJ6GEYJ102	M.RESISTOR CH 1/10W 1K	1	
R103		ERJ6GEYJ152	M.RESISTOR CH 1/10W 1.5K	1	
R104		ERJ6GEYJ102	M.RESISTOR CH 1/10W 1K	1	
R105,06		ERJ6GEYJ331	M.RESISTOR CH 1/10W 330	2	
R107		ERJ6GEYJ152	M.RESISTOR CH 1/10W 1.5K	1	
R108		ERJ6GEYJ102	M.RESISTOR CH 1/10W 1K	1	
R109		ERDS2TJ470	C.RESISTOR 1/4W 47	1	
R110		ERJ6GEYJ680	M.RESISTOR CH 1/10W 68	1	
R111		ERDS2TJ470	C.RESISTOR 1/4W 47	1	
R112		ERJ6GEYJ102	M.RESISTOR CH 1/10W 1K	1	
R113		ERJ6GEYJ152	M.RESISTOR CH 1/10W 1.5K	1	
R114		ERJ6GEYJ102	M.RESISTOR CH 1/10W 1K	1	
R115,16		ERJ6GEYJ331	M.RESISTOR CH 1/10W 330	2	
R117		ERJ6GEYJ332	M.RESISTOR CH 1/10W 3.3K	1	
R118		ERJ6GEYJ103	M.RESISTOR CH 1/10W 10K	1	
R119		ERJ6GEYJ182	M.RESISTOR CH 1/10W 1.8K	1	
R120		ERJ6GEYJ472	M.RESISTOR CH 1/10W 4.7K	1	
R121		ERJ8GCJ820	M.RESISTOR CH 1/8W 82	1	
R122,23		ERJ6GEYJ821	M.RESISTOR CH 1/10W 820	2	
R124,25		ERJ6GEYJ332	M.RESISTOR CH 1/10W 3.3K	2	
R126		ERJ6GEYJ103	M.RESISTOR CH 1/10W 10K	1	
R127		ERJ6GEYJ101	M.RESISTOR CH 1/10W 100	1	
R128		ERJ6GEYJ103	M.RESISTOR CH 1/10W 10K	1	
R129		ERJ6GEYJ182	M.RESISTOR CH 1/10W 1.8K	1	
R130		ERJ6GEYJ472	M.RESISTOR CH 1/10W 4.7K	1	
R131		ERJ8GCJ820	M.RESISTOR CH 1/8W 82	1	
R132,33		ERJ6GEYJ821	M.RESISTOR CH 1/10W 820	2	
R134,35		ERJ6GEYJ332	M.RESISTOR CH 1/10W 3.3K	2	
R136		ERJ6GEYJ103	M.RESISTOR CH 1/10W 10K	1	
R137		ERJ6GEYJ101	M.RESISTOR CH 1/10W 100	1	
R138		ERJ6GEYJ103	M.RESISTOR CH 1/10W 10K	1	
R201		ERJ6GEYJ332	M.RESISTOR CH 1/10W 3.3K	1	
R202		ERJ6GEYJ470	M.RESISTOR CH 1/10W 47	1	
R203		ERJ6GEYJ222	M.RESISTOR CH 1/10W 2.2K	1	
R204		ERJ6GEYG223	M.RESISTOR CH 1/10W 22K	1	
R205		ERJ6GEYJ472	M.RESISTOR CH 1/10W 4.7K	1	
R206-08		ERJ6GEYJ152	M.RESISTOR CH 1/10W 1.5K	3	
R209		ERJ6GEYJ680	M.RESISTOR CH 1/10W 68	1	
R210		ERJ6GEYJ272	M.RESISTOR CH 1/10W 2.7K	1	

Ref.No.		Part No.	Part Name & Description	Pcs	Remarks
R211		ERJ6GEYJ102	M.RESISTOR CH 1/10W 1K	1	
R212		ERJ6GEYJ470	M.RESISTOR CH 1/10W 47	1	
R213		ERJ6GEYJ103	M.RESISTOR CH 1/10W 10K	1	
R214		ERJ6GEYJ470	M.RESISTOR CH 1/10W 47	1	
R215		ERJ6GEYJ103	M.RESISTOR CH 1/10W 10K	1	
R216		ERJ6GEYJ101	M.RESISTOR CH 1/10W 100	1	
R217		ERJ6GEYJ470	M.RESISTOR CH 1/10W 47	1	
R218		ERJ6GEYJ471	M.RESISTOR CH 1/10W 470	1	
R219		ERJ6GEYJ332	M.RESISTOR CH 1/10W 3.3K	1	
R220		ERJ6GEYJ470	M.RESISTOR CH 1/10W 47	1	
R221		ERJ6GEYJ222	M.RESISTOR CH 1/10W 2.2K	1	
R222		ERJ6GEYG223	M.RESISTOR CH 1/10W 22K	1	
R223		ERJ6GEYJ472	M.RESISTOR CH 1/10W 4.7K	1	
R224-26		ERJ6GEYJ152	M.RESISTOR CH 1/10W 1.5K	3	
R227		ERJ6GEYJ680	M.RESISTOR CH 1/10W 68	1	
R228		ERJ6GEYJ272	M.RESISTOR CH 1/10W 2.7K	1	
R229		ERJ6GEYJ102	M.RESISTOR CH 1/10W 1K	1	
R230		ERJ6GEYJ470	M.RESISTOR CH 1/10W 47	1	
R231		ERJ6GEYJ103	M.RESISTOR CH 1/10W 10K	1	
R232		ERJ6GEYJ470	M.RESISTOR CH 1/10W 47	1	
R233		ERJ6GEYJ103	M.RESISTOR CH 1/10W 10K	1	
R234		ERJ6GEYJ101	M.RESISTOR CH 1/10W 100	1	
R235		ERJ6GEYJ470	M.RESISTOR CH 1/10W 47	1	
R236		ERJ6GEYJ471	M.RESISTOR CH 1/10W 470	1	
R237		ERJ6GEYJ472	M.RESISTOR CH 1/10W 4.7K	1	
R238		ERJ6GEYJ470	M.RESISTOR CH 1/10W 47	1	
R239		ERJ6GEYJ222	M.RESISTOR CH 1/10W 2.2K	1	
R240		ERJ6GEYJ333	M.RESISTOR CH 1/10W 33K	1	
R241		ERJ6GEYJ472	M.RESISTOR CH 1/10W 4.7K	1	
R242-44		ERJ6GEYJ152	M.RESISTOR CH 1/10W 1.5K	3	
R245		ERJ6GEYJ680	M.RESISTOR CH 1/10W 68	1	
R246		ERJ6GEYJ272	M.RESISTOR CH 1/10W 2.7K	1	
R247		ERJ6GEYJ102	M.RESISTOR CH 1/10W 1K	1	
R248		ERJ6GEYJ470	M.RESISTOR CH 1/10W 47	1	
R249		ERJ6GEYJ103	M.RESISTOR CH 1/10W 10K	1	
R250		ERJ6GEYJ470	M.RESISTOR CH 1/10W 47	1	
R251		ERJ6GEYJ103	M.RESISTOR CH 1/10W 10K	1	
R252		ERJ6GEYJ121		1	
R253		ERJ6GEYJ470	M.RESISTOR CH 1/10W 47	1	
R254		ERJ6GEYJ471	M.RESISTOR CH 1/10W 470	1	
R255		ERJ6GEYJ472	M.RESISTOR CH 1/10W 4.7K	1	
R256		ERJ6GEYJ470	M.RESISTOR CH 1/10W 47	1	
R257		ERJ6GEYJ222	M.RESISTOR CH 1/10W 2.2K	1	
R258		ERJ6GEYJ333	M.RESISTOR CH 1/10W 33K	1	
R259		ERJ6GEYJ472	M.RESISTOR CH 1/10W 4.7K	1	
R260-62		ERJ6GEYJ152	M.RESISTOR CH 1/10W 1.5K	3	
R263		ERJ6GEYJ680	M.RESISTOR CH 1/10W 68	1	
R264		ERJ6GEYJ272	M.RESISTOR CH 1/10W 2.7K	1	
R265		ERJ6GEYJ102	M.RESISTOR CH 1/10W 1K	1	
R266		ERJ6GEYJ470	M.RESISTOR CH 1/10W 47	1	
R267		ERJ6GEYJ103	M.RESISTOR CH 1/10W 10K	1	
R268		ERJ6GEYJ470	M.RESISTOR CH 1/10W 47	1	
R269		ERJ6GEYJ103	M.RESISTOR CH 1/10W 10K	1	
R270		ERJ6GEYJ121	M.RESISTOR CH 1/10W 120	1	
R271		ERJ6GEYJ470	M.RESISTOR CH 1/10W 47	1	
R272		ERJ6GEYJ471	M.RESISTOR CH 1/10W 470	1	
R273,74		ERJ6GEYJ392	M.RESISTOR CH 1/10W 3.9K	2	
R275		ERJ6GEYJ222	M.RESISTOR CH 1/10W 2.2K	1	
R276,77		ERDS2TJ102	C.RESISTOR 1/4W 1K	2	
R278-81		ERJ6GEYJ470	M.RESISTOR CH 1/10W 47	4	
RY1-Y4		VSY2039	RELAY	4	
T1-T6		EIR7QE018B	TRANSFORMER	6	
T201,02		VLT0535	TRANSFORMER	2	
T203,04		VLT0536	TRANSFORMER	2	
TP1-P8		VJR0646	TEST POINT	8	
TP201-04		VJR0646	TEST POINT	4	

Ref.No.		Part No.	Part Name & Description	Pcs	Remarks
TPG1-G3		VJR0646	TEST POINT	3	
VC1-C4		VCV0031	TRIMMER	4	
VR3-R6		VRV0064B102	V.RESISTOR 1K	4	
			MISCELLANEOUS		
		VJF0004	HOLDER	2	
		VMP0972	P.C.B. ANGLE	1	
		VSC2340	SHIELD CASE	1	
		VSC2341	SHIELD CASE	1	
		VSC2342	SHIELD CASE	1	
		XTV3+6F	SCREW	2	
	■	VEP85015F	P.C.BOARD W/COMPONENT RA & HA		FOR AU-63H
			CAPACITORS		
C201		ECUM1H103KBN	C.CAPACITOR CH 50V 0.01U	1	
C202		ECEA1EU100	E.CAPACITOR 25V 10U	1	
C203		ECUM1H103KBN	C.CAPACITOR CH 50V 0.01U	1	
C204		ECSF0JE106	T.CAPACITOR 6.3V 10U	1	
C205		ECUM1H103KBN	C.CAPACITOR CH 50V 0.01U	1	
C206		ECUM1E1042FN	C.CAPACITOR CH 25V 0.1U	1	
C207		ECEA1CU470	E.CAPACITOR 16V 47U	1	
C208,09		ECUM1H103KBN	C.CAPACITOR CH 50V 0.01U	2	
C210		ECEA1EU100	E.CAPACITOR 25V 10U	1	
C211		ECUM1H103KBN	C.CAPACITOR CH 50V 0.01U	1	
C212		ECSF0JE106	T.CAPACITOR 6.3V 10U	1	
C213		ECUM1H103KBN	C.CAPACITOR CH 50V 0.01U	1	
C214		ECUM1E104ZFN	C.CAPACITOR CH 25V 0.1U	1	
C215		ECEA1CU470	E.CAPACITOR 16V 47U	1	
C216,17		ECUM1H103KBN	C.CAPACITOR CH 50V 0.01U	2	
C218		ECEA1EU100	E.CAPACITOR 25V 10U	1	
C219		ECUM1H103KBN	C.CAPACITOR CH 50V 0.01U	1	
C220		ECSF0JE106	T.CAPACITOR 6.3V 10U	1	
C221		ECUM1H103KBN	C.CAPACITOR CH 50V 0.01U	1	
C222		ECUM1E104ZFN	C.CAPACITOR CH 25V 0.1U	1	
C223		ECEA1CU470	E.CAPACITOR 16V 47U	1	
C224,25		ECUM1H103KBN	C.CAPACITOR CH 50V 0.01U	2	
C226		ECEA1EU100	E.CAPACITOR 25V 10U	1	
C227		ECUM1H103KBN	C.CAPACITOR CH 50V 0.01U	1	
C228		ECSF0JE106	T.CAPACITOR 6.3V 10U	1	
C229		ECUM1H103KBN	C.CAPACITOR CH 50V 0.01U	1	
C230		ECUM1E1042FN	C.CAPACITOR CH 25V 0.1U	1	
C231		ECEA1CU470	E.CAPACITOR 16V 47U	1	
C232		ECUM1H103KBN	C.CAPACITOR CH 50V 0.01U	1	
C233,34		ECEA1CU470	E.CAPACITOR 16V 47U	2	
C235,36		ECUM1E104ZFN	C.CAPACITOR CH 25V 0.1U	2	
CN81		VJP3079	CONNECTOR (MALE)	1	
CN83		VJP1233T	CONNECTOR(MALE) 6P	1	
CN84		VJP1233G	CONNECTOR(MALE) 6P	1	
CN85		VJP1233T	CONNECTOR(MALE) 6P	1	
CN86		VJP1233G	CONNECTOR(MALE) 6P	1	

Ref.No.		Part No.	Part Name & Description	Pcs	Remarks
D201		MA151K	DIODE	1	
IC201-04		NJM592M8	IC	4	
IC205		AN78N09	IC	1	
L201-05		VLQEL05S101K	COIL 100UH	5	
Q201		2SC3757	TRANSISTOR	1	(Q,R)
Q202,03		2SK316	TRANSISTOR	2	(Q)
Q204,05		2SC3757	TRANSISTOR	2	(Q,R)
Q206,07		2SK316	TRANSISTOR	2	(Q)
Q208,09		2SC3757	TRANSISTOR	2	(Q,R)
Q210,11		2SK316	TRANSISTOR	2	(Q)
Q212,13		2SC3757	TRANSISTOR	2	(Q,R)
Q214,15		2SK316	TRANSISTOR	2	(Q)
Q216		2SC3757	TRANSISTOR	1	(Q,R)
Q217		2SD602	TRANSISTOR CHIP	1	(Q,R,S)
Q218		UN2213	TRANSISTOR-RESISTOR	1	
Q219		2SB643	TRANSISTOR	1	
Q220,21		2SD602	TRANSISTOR CHIP	2	(Q,R,S)
Q222-25		2SC3757	TRANSISTOR	4	(Q,R)
			RESISTORS		
R201		ERJ6GEYJ332	M.RESISTOR CH 1/10W 3.3K	1	
R202		ERJ6GEYJ470	M.RESISTOR CH 1/10W 47	1	
R203		ERJ6GEYJ222	M.RESISTOR CH 1/10W 2.2K	1	
R204		ERJ6GEYG223	M.RESISTOR CH 1/10W 22K	1	
R205		ERJ6GEYJ472	M.RESISTOR CH 1/10W 4.7K	1	
R206-08		ERJ6GEYJ152	M.RESISTOR CH 1/10W 1.5K	3	
R209		ERJ6GEYJ680	M.RESISTOR CH 1/10W 68	1	
R210		ERJ6GEYJ272	M.RESISTOR CH 1/10W 2.7K	1	
R211		ERJ6GEYJ102	M.RESISTOR CH 1/10W 1K	1	
R212		ERJ6GEYJ470	M.RESISTOR CH 1/10W 47	1	
R213		ERJ6GEYJ103	M.RESISTOR CH 1/10W 10K	1	
R214		ERJ6GEYJ470	M.RESISTOR CH 1/10W 47	1	
R215		ERJ6GEYJ103	M.RESISTOR CH 1/10W 10K	1	
R216		ERJ6GEYJ820	M.RESISTOR CH 1/10W 82	1	
R217		ERJ6GEYJ470	M.RESISTOR CH 1/10W 47	1	
R218		ERJ6GEYJ471	M.RESISTOR CH 1/10W 470	1	
R219		ERJ6GEYJ332	M.RESISTOR CH 1/10W 3.3K	1	
R220		ERJ6GEYJ470	M.RESISTOR CH 1/10W 47	1	
R221		ERJ6GEYJ222	M.RESISTOR CH 1/10W 2.2K	1	
R222		ERJ6GEYG223	M.RESISTOR CH 1/10W 22K	1	
R223		ERJ6GEYJ472	M.RESISTOR CH 1/10W 4.7K	1	
R224-26		ERJ6GEYJ152	M.RESISTOR CH 1/10W 1.5K	3	
R227		ERJ6GEYJ680	M.RESISTOR CH 1/10W 68	1	
R228		ERJ6GEYJ272	M.RESISTOR CH 1/10W 2.7K	1	
R229		ERJ6GEYJ102	M.RESISTOR CH 1/10W 1K	1	
R230		ERJ6GEYJ470	M.RESISTOR CH 1/10W 47	1	
R231		ERJ6GEYJ103	M.RESISTOR CH 1/10W 10K	1	
R232		ERJ6GEYJ470	M.RESISTOR CH 1/10W 47	1	
R233		ERJ6GEYJ103	M.RESISTOR CH 1/10W 10K	1	
R234		ERJ6GEYJ820	M.RESISTOR CH 1/10W 82	1	
R235		ERJ6GEYJ470	M.RESISTOR CH 1/10W 47	1	
R236		ERJ6GEYJ471	M.RESISTOR CH 1/10W 470	1	
R237		ERJ6GEYJ472	M.RESISTOR CH 1/10W 4.7K	1	
R238		ERJ6GEYJ470	M.RESISTOR CH 1/10W 47	1	
R239		ERJ6GEYJ222	M.RESISTOR CH 1/10W 2.2K	1	
R240		ERJ6GEYJ333	M.RESISTOR CH 1/10W 33K	1	
R241		ERJ6GEYJ472	M.RESISTOR CH 1/10W 4.7K	1	
R242-44		ERJ6GEYJ152	M.RESISTOR CH 1/10W 1.5K	3	
R245		ERJ6GEYJ680	M.RESISTOR CH 1/10W 68	1	
R246		ERJ6GEYJ272	M.RESISTOR CH 1/10W 2.7K	1	
R247		ERJ6GEYJ102	M.RESISTOR CH 1/10W 1K	1	
R248		ERJ6GEYJ470	M.RESISTOR CH 1/10W 47	1	
R249		ERJ6GEYJ103	M.RESISTOR CH 1/10W 10K	1	

Ref.No.		Part No.	Part Name & Description	Pcs	Remarks
R250		ERJ6GEYJ470	M.RESISTOR CH 1/10W 47	1	
R251		ERJ6GEYJ103	M.RESISTOR CH 1/10W 10K	1	
R252		ERJ6GEYJ101	M.RESISTOR CH 1/10W 100	1	
R253		ERJ6GEYJ470	M.RESISTOR CH 1/10W 47	1	
R254		ERJ6GEYJ471	M.RESISTOR CH 1/10W 470	1	
R255		ERJ6GEYJ472	M.RESISTOR CH 1/10W 4.7K	1	
R256		ERJ6GEYJ470	M.RESISTOR CH 1/10W 47	1	
R257		ERJ6GEYJ222	M.RESISTOR CH 1/10W 2.2K	1	
R258		ERJ6GEYJ333	M.RESISTOR CH 1/10W 33K	1	
R259		ERJ6GEYJ472	M.RESISTOR CH 1/10W 4.7K	1	
R260-62		ERJ6GEYJ152	M.RESISTOR CH 1/10W 1.5K	3	
R263		ERJ6GEYJ680	M.RESISTOR CH 1/10W 68	1	
R264		ERJ6GEYJ272	M.RESISTOR CH 1/10W 2.7K	1	
R265		ERJ6GEYJ102	M.RESISTOR CH 1/10W 1K	1	
R266		ERJ6GEYJ470	M.RESISTOR CH 1/10W 47	1	
R267		ERJ6GEYJ103	M.RESISTOR CH 1/10W 10K	1	
R268		ERJ6GEYJ470	M.RESISTOR CH 1/10W 47	1	
R269		ERJ6GEYJ103	M.RESISTOR CH 1/10W 10K	1	
R270		ERJ6GEYJ101	M.RESISTOR CH 1/10W 100	1	
R271		ERJ6GEYJ470	M.RESISTOR CH 1/10W 47	1	
R272		ERJ6GEYJ471	M.RESISTOR CH 1/10W 470	1	
R273,74		ERJ6GEYJ392	M.RESISTOR CH 1/10W 3.9K	2	
R275		ERJ6GEYJ222	M.RESISTOR CH 1/10W 2.2K	1	
R276,77		ERDS2TJ102	C.RESISTOR 1/4W 1K	2	
R278-81		ERJ6GEYJ470	M.RESISTOR CH 1/10W 47	4	
RY1-Y4		VSY2039	RELAY	4	
T201,02		VLT0535	TRANSFORMER	2	
T203,04		VLT0536	TRANSFORMER	2	
TP201-04		VJR0646	TEST POINT	4	
			MISCELLANEOUS		
		VJF0004	HOLDER	2	
		VMP0972	P.C.B. ANGLE	1	
		VSC2340	SHIELD CASE	1	
		VSC2341	SHIELD CASE	1	
		VSC2342	SHIELD CASE	1	
		XTV3+6F	SCREW	2	
	■	VEP85015E	P.C.BOARD W/COMPONENT		FOR AU-62H
			RA & HA		
			CAPACITORS		
C201		ECUM1H103KBN	C.CAPACITOR CH 50V 0.01U	1	
C202		ECEA1EU100	E.CAPACITOR 25V 10U	1	
C203		ECUM1H103KBN	C.CAPACITOR CH 50V 0.01U	1	
C204		ECSF0JE106	T.CAPACITOR 6.3V 10U	1	
C205		ECUM1H103KBN	C.CAPACITOR CH 50V 0.01U	1	
C206		ECUM1E104ZFN	C.CAPACITOR CH 25V 0.1U	1	
C207		ECEA1CU470	E.CAPACITOR 16V 47U	1	
C208,09		ECUM1H103KBN	C.CAPACITOR CH 50V 0.01U	2	
C210		ECEA1EU100	E.CAPACITOR 25V 10U	1	
C211		ECUM1H103KBN	C.CAPACITOR CH 50V 0.01U	1	
C212		ECSF0JE106	T.CAPACITOR 6.3V 10U	1	
C213		ECUM1H103KBN	C.CAPACITOR CH 50V 0.01U	1	
C214		ECUM1E104ZFN	C.CAPACITOR CH 25V 0.1U	1	

Ref.No.		Part No.	Part Name & Description	Pcs	Remarks
C215		ECEA1CU470	E.CAPACITOR 16V 47U	1	
C216,17		ECUM1H103KBN	C.CAPACITOR CH 50V 0.01U	2	
C218		ECEA1EU100	E.CAPACITOR 25V 10U	1	
C219		ECUM1H103KBN	C.CAPACITOR CH 50V 0.01U	1	
C220		ECSF0JE106	T.CAPACITOR 6.3V 10U	1	
C221		ECUM1H103KBN	C.CAPACITOR CH 50V 0.01U	1	
C222		ECUM1E104ZFN	C.CAPACITOR CH 25V 0.1U	1	
C223		ECEA1CU470	E.CAPACITOR 16V 47U	1	
C224,25		ECUM1H103KBN	C.CAPACITOR CH 50V 0.01U	2	
C226		ECEA1EU100	E.CAPACITOR 25V 10U	1	
C227		ECUM1H103KBN	C.CAPACITOR CH 50V 0.01U	1	
C228		ECSF0JE106	T.CAPACITOR 6.3V 10U	1	
C229		ECUM1H103KBN	C.CAPACITOR CH 50V 0.01U	1	
C230		ECUM1E104ZFN	C.CAPACITOR CH 25V 0.1U	1	
C231		ECEA1CU470	E.CAPACITOR 16V 47U	1	
C232		ECUM1H103KBN	C.CAPACITOR CH 50V 0.01U	1	
C233,34		ECEA1CU470	E.CAPACITOR 16V 47U	2	
C235,36		ECUM1E104ZFN	C.CAPACITOR CH 25V 0.1U	2	
CN81		VJP3079	CONNECTOR (MALE)	1	
CN83		VJP1233T	CONNECTOR(MALE) 6P	1	
CN84		VJP1233G	CONNECTOR(MALE) 6P	1	
CN85		VJP1233T	CONNECTOR(MALE) 6P	1	
CN86		VJP1233G	CONNECTOR(MALE) 6P	1	
D201		MA151K	DIODE	1	
IC201-04		NJM592M8	IC	4	
IC205		AN78N09	IC	1	
L201-05		VLQEL05S101K	COIL 100UH	5	
Q201		2SC3757	TRANSISTOR	1	(Q,R)
Q202,03		2SK316	TRANSISTOR	2	(Q)
Q204,05		2SC3757	TRANSISTOR	2	(Q,R)
Q206,07		2SK316	TRANSISTOR	2	(Q)
Q208,09		2SC3757	TRANSISTOR	2	(Q,R)
Q210,11		2SK316	TRANSISTOR	2	(Q)
Q212,13		2SC3757	TRANSISTOR	2	(Q,R)
Q214,15		2SK316	TRANSISTOR	2	(Q)
Q216		2SC3757	TRANSISTOR	1	(Q,R)
Q217		2SD602	TRANSISTOR CHIP	1	(Q,R,S)
Q218		UN2213	TRANSISTOR-RESISTOR	1	
Q219		2SB643	TRANSISTOR	1	
Q220,21		2SD602	TRANSISTOR CHIP	2	(Q,R,S)
Q222-25		2SC3757	TRANSISTOR	4	(Q,R)
			RESISTORS		
R201		ERJ6GEYJ332	M.RESISTOR CH 1/10W 3.3K	1	
R202		ERJ6GEYJ470	M.RESISTOR CH 1/10W 47	1	
R203		ERJ6GEYJ222	M.RESISTOR CH 1/10W 2.2K	1	
R204		ERJ6GEYG223	M.RESISTOR CH 1/10W 22K	1	
R205		ERJ6GEYJ472	M.RESISTOR CH 1/10W 4.7K	1	
R206-08		ERJ6GEYJ152	M.RESISTOR CH 1/10W 1.5K	3	
R209		ERJ6GEYJ680	M.RESISTOR CH 1/10W 68	1	
R210		ERJ6GEYJ272	M.RESISTOR CH 1/10W 2.7K	1	
R211		ERJ6GEYJ102	M.RESISTOR CH 1/10W 1K	1	
R212		ERJ6GEYJ470	M.RESISTOR CH 1/10W 47	1	
R213		ERJ6GEYJ103	M.RESISTOR CH 1/10W 10K	1	
R214		ERJ6GEYJ470	M.RESISTOR CH 1/10W 47	1	
R215		ERJ6GEYJ103	M.RESISTOR CH 1/10W 10K	1	
R216		ERJ6GEYJ820	M.RESISTOR CH 1/10W 82	1	
R217		ERJ6GEYJ470	M.RESISTOR CH 1/10W 47	1	

Ref.No.		Part No.	Part Name & Description	Pcs	Remarks
R218		ERJ6GEYJ471	M.RESISTOR CH 1/10W 470	1	
R219		ERJ6GEYJ332	M.RESISTOR CH 1/10W 3.3K	1	
R220		ERJ6GEYJ470	M.RESISTOR CH 1/10W 47	1	
R221		ERJ6GEYJ222	M.RESISTOR CH 1/10W 2.2K	1	
R222		ERJ6GEYG223	M.RESISTOR CH 1/10W 22K	1	
R223		ERJ6GEYJ472	M.RESISTOR CH 1/10W 4.7K	1	
R224-26		ERJ6GEYJ152	M.RESISTOR CH 1/10W 1.5K	3	
R227		ERJ6GEYJ680	M.RESISTOR CH 1/10W 68	1	
R228		ERJ6GEYJ272	M.RESISTOR CH 1/10W 2.7K	1	
R229		ERJ6GEYJ102	M.RESISTOR CH 1/10W 1K	1	
R230		ERJ6GEYJ470	M.RESISTOR CH 1/10W 47	1	
R231		ERJ6GEYJ103	M.RESISTOR CH 1/10W 10K	1	
R232		ERJ6GEYJ470	M.RESISTOR CH 1/10W 47	1	
R233		ERJ6GEYJ103	M.RESISTOR CH 1/10W 10K	1	
R234		ERJ6GEYJ820	M.RESISTOR CH 1/10W 82	1	
R235		ERJ6GEYJ470	M.RESISTOR CH 1/10W 47	1	
R236		ERJ6GEYJ471	M.RESISTOR CH 1/10W 470	1	
R237		ERJ6GEYJ472	M.RESISTOR CH 1/10W 4.7K	1	
R238		ERJ6GEYJ470	M.RESISTOR CH 1/10W 47	1	
R239		ERJ6GEYJ222	M.RESISTOR CH 1/10W 2.2K	1	
R240		ERJ6GEYJ333	M.RESISTOR CH 1/10W 33K	1	
R241		ERJ6GEYJ472	M.RESISTOR CH 1/10W 4.7K	1	
R242-44		ERJ6GEYJ152	M.RESISTOR CH 1/10W 1.5K	3	
R245		ERJ6GEYJ680	M.RESISTOR CH 1/10W 68	1	
R246		ERJ6GEYJ272	M.RESISTOR CH 1/10W 2.7K	1	
R247		ERJ6GEYJ102	M.RESISTOR CH 1/10W 1K	1	
R248		ERJ6GEYJ470	M.RESISTOR CH 1/10W 47	1	
R249		ERJ6GEYJ103	M.RESISTOR CH 1/10W 10K	1	
R250		ERJ6GEYJ470	M.RESISTOR CH 1/10W 47	1	
R251		ERJ6GEYJ103	M.RESISTOR CH 1/10W 10K	1	
R252		ERJ6GEYJ101	M.RESISTOR CH 1/10W 100	1	
R253		ERJ6GEYJ470	M.RESISTOR CH 1/10W 47	1	
R254		ERJ6GEYJ471	M.RESISTOR CH 1/10W 470	1	
R255		ERJ6GEYJ472	M.RESISTOR CH 1/10W 4.7K	1	
R256		ERJ6GEYJ470	M.RESISTOR CH 1/10W 47	1	
R257		ERJ6GEYJ222	M.RESISTOR CH 1/10W 2.2K	1	
R258		ERJ6GEYJ333	M.RESISTOR CH 1/10W 33K	1	
R259		ERJ6GEYJ472	M.RESISTOR CH 1/10W 4.7K	1	
R260-62		ERJ6GEYJ152	M.RESISTOR CH 1/10W 1.5K	3	
R263		ERJ6GEYJ680	M.RESISTOR CH 1/10W 68	1	
R264		ERJ6GEYJ272	M.RESISTOR CH 1/10W 2.7K	1	
R265		ERJ6GEYJ102	M.RESISTOR CH 1/10W 1K	1	
R266		ERJ6GEYJ470	M.RESISTOR CH 1/10W 47	1	
R267		ERJ6GEYJ103	M.RESISTOR CH 1/10W 10K	1	
R268		ERJ6GEYJ470	M.RESISTOR CH 1/10W 47	1	
R269		ERJ6GEYJ103	M.RESISTOR CH 1/10W 10K	1	
R270		ERJ6GEYJ101	M.RESISTOR CH 1/10W 100	1	
R271		ERJ6GEYJ470	M.RESISTOR CH 1/10W 47	1	
R272		ERJ6GEYJ471	M.RESISTOR CH 1/10W 470	1	
R273,74		ERJ6GEYJ392	M.RESISTOR CH 1/10W 3.9K	2	
R275		ERJ6GEYJ222	M.RESISTOR CH 1/10W 2.2K	1	
R276,77		ERDS2TJ102	C.RESISTOR 1/4W 1K	2	
R278-81		ERJ6GEYJ470	M.RESISTOR CH 1/10W 47	4	
RY1-Y4		VSY2039	RELAY	4	
T201,02		VLT0535	TRANSFORMER	2	
T203,04		VLT0536	TRANSFORMER	2	
TP201-04		VJR0646	TEST POINT	4	
			MISCELLANEOUS		
		VJF0004	HOLDER	2	
		VMP0972	P.C.B. ANGLE	1	
		VSC2340	SHIELD CASE	1	
		VSC2341	SHIELD CASE	1	
		VSC2342	SHIELD CASE	1	

Ref.No.		Part No.	Part Name & Description	Pcs	Remarks
		XTV3+6F	SCREW	2	
	■	VEP00E27C	P.C.BOARD W/COMPONENT		FOR AU-65H,AU-63H
			TR SENSOR (1)		AU-62H
			MISCELLANEOUS		
		ON1110	PHOTO TRNSISTOR		
	■	VEP00E28C	P.C.BOARD W/COMPONENT		FOR AU-65H,AU-63H
			TR SENSOR (2)		AU-62H
			MISCELLANEOUS		
		ON1110	PHOTO TRNSISTOR		
	■	VEP00E25C	P.C.BOARD W/COMPONENT		FOR AU-65H,AU-63H
			UNLOADING PHOTO		AU-62H
			MISCELLANEOUS		
		ON1110	PHOTO TRNSISTOR		
	■	VEP83174C	P.C.BOARD W/COMPONENT		FOR AU-65H
			VIDEO IN/OUT		
			CAPACITORS		
C1		ECUM1H103KBN	C.CAPACITOR CH 50V 0.01U	1	
C2		ECEA1CKG470	E.CAPACITOR 16V 47U	1	
C3		ECUM1H103KBN	C.CAPACITOR CH 50V 0.01U	1	
C4		ECEA1CKG470	E.CAPACITOR 16V 47U	1	
C5-C8		ECUM1H103KBN	C.CAPACITOR CH 50V 0.01U	4	
C10		ECUM1E104ZFN	C.CAPACITOR CH 25V 0.1U	1	
C81		ECUM1C104KBN	C.CAPACITOR CH 16V 0.1U	1	
C101		ECEA1CKG470	E.CAPACITOR 16V 47U	1	
C102		ECUM1H103KBN	C.CAPACITOR CH 50V 0.01U	1	
C103		ECEA1CU101	E.CAPACITOR 16V 100U	1	
C104		ECUM1H103KBN	C.CAPACITOR CH 50V 0.01U	1	
C105		ECUM1H101JCN	C.CAPACITOR CH 50V 100P	1	
C106,07		ECUM1H270JCN	C.CAPACITOR CH 50V 27P	2	
C108		ECUM1H101JCN	C.CAPACITOR CH 50V 100P	1	
C109		ECUM1H270JCN	C.CAPACITOR CH 50V 27P	1	
C110		ECUM1H101JCN	C.CAPACITOR CH 50V 100P	1	
C111		ECUM1H270JCN	C.CAPACITOR CH 50V 27P	1	
C112		ECUM1H103KBN	C.CAPACITOR CH 50V 0.01U	1	
C113		ECUM1H101JCN	C.CAPACITOR CH 50V 100P	1	
C114		ECUM1H270JCN	C.CAPACITOR CH 50V 27P	1	
C115		ECEA1CKG470	E.CAPACITOR 16V 47U	1	
C116		ECUM1H103KBN	C.CAPACITOR CH 50V 0.01U	1	
C117		ECEA1CU101	E.CAPACITOR 16V 100U	1	

Ref.No.		Part No.	Part Name & Description	Pcs	Remarks
C118		ECUM1H103KBN	C.CAPACITOR CH 50V 0.01U	1	
C119		ECUM1H101JCN	C.CAPACITOR CH 50V 100P	1	
C120		ECUM1H270JCN	C.CAPACITOR CH 50V 27P	1	
C121		ECUM1H101JCN	C.CAPACITOR CH 50V 100P	1	
C122		ECUM1H270JCN	C.CAPACITOR CH 50V 27P	1	
C123		ECUM1H101JCN	C.CAPACITOR CH 50V 100P	1	
C124		ECUM1H270JCN	C.CAPACITOR CH 50V 27P	1	
C125-36		ECUM1E104ZFN	C.CAPACITOR CH 25V 0.1U	12	
C181		ECUM1C104KBN	C.CAPACITOR CH 16V 0.1U	1	
C182,83		ECUM1E104ZFN	C.CAPACITOR CH 25V 0.1U	2	
CN250		VJP1879T	CONNECTOR(MALE)	1	
CN251,52		VJP1881T	CONNECTOR(MALE)	2	
CN253		VJP1876T	CONNECTOR(MALE)	1	
CN254		VJP1874T	CONNECTOR (MALE)	1	
D1-D3		MA151WK	DIODE	3	
D4		MA151K	DIODE	1	
D101-07		MA3130-L	DIODE	7	
IC101		AN78N09	IC	1	
IC102		AN79N09	IC	1	
L1,L2		VLQEL05S101K	COIL 100UH	2	
P1		VJP1875T	CONNECTOR(MALE)	1	
P3		VJP1875T	CONNECTOR(MALE)	1	
Q1-Q7		2SA1226	TRANSISTOR	7	
Q81		UN2213	TRANSISTOR-RESISTOR	1	
Q101		2SB709-R	TRANSISTOR CHIP	1	(Q,R)
Q102,03		2SD601-R	TRANSISTOR CHIP	2	(Q,R)
Q104		2SB709-R	TRANSISTOR CHIP	1	(Q,R)
Q105,06		2SD601-R	TRANSISTOR CHIP	2	(Q,R)
Q107		2SB709-R	TRANSISTOR CHIP	1	(Q,R)
Q108,09		2SD601-R	TRANSISTOR CHIP	2	(Q,R)
Q110		2SB709-R	TRANSISTOR CHIP	1	(Q,R)
Q111,12		2SD601-R	TRANSISTOR CHIP	2	(Q,R)
Q113		2SB709-R	TRANSISTOR CHIP	1	(Q,R)
Q114,15		2SD601-R	TRANSISTOR CHIP	2	(Q,R)
Q116		2SB709-R	TRANSISTOR CHIP	1	(Q,R)
Q117,18		2SD601-R	TRANSISTOR CHIP	2	(Q,R)
Q119		2SB709-R	TRANSISTOR CHIP	1	(Q,R)
Q120,21		2SD601-R	TRANSISTOR CHIP	2	(Q,R)
Q181		UN2112	TRANSISTOR-RESISTOR	1	
Q182		2SD601-R	TRANSISTOR CHIP	1	(Q,R)
			RESISTORS		
R1,R2		VRE0034E151	M.RESISTOR CH 1/10W 150	2	
R3		ERJ6GEYJ101	M.RESISTOR CH 1/10W 100	1	
R4,R5		ERJ6GEYJ152	M.RESISTOR CH 1/10W 1.5K	2	
R6		ERJ6GEYJ330	M.RESISTOR CH 1/10W 33	1	
R7		ERJ6GEYJ104	M.RESISTOR CH 1/10W 100K	1	
R8,R9		VRE0034E151	M.RESISTOR CH 1/10W 150	2	
R10		ERJ6GEYJ101	M.RESISTOR CH 1/10W 100	1	
R11,12		ERJ6GEYJ152	M.RESISTOR CH 1/10W 1.5K	2	
R13		ERJ6GEYJ330	M.RESISTOR CH 1/10W 33	1	
R14		ERJ6GEYJ104	M.RESISTOR CH 1/10W 100K	1	
R15,16		VRE0034E151	M.RESISTOR CH 1/10W 150	2	
R17		ERJ6GEYJ101	M.RESISTOR CH 1/10W 100	1	
R18		ERJ6GEYJ122	M.RESISTOR CH 1/10W 1.2K	1	

Ref.No.		Part No.	Part Name & Description	Pcs	Remarks
R19		ERJ6GEYJ330	M.RESISTOR CH 1/10W 33	1	
R20,21		VRE0034E151	M.RESISTOR CH 1/10W 150	2	
R22		ERJ6GEYJ101	M.RESISTOR CH 1/10W 100	1	
R23		ERJ6GEYJ122	M.RESISTOR CH 1/10W 1.2K	1	
R24		ERJ6GEYJ330	M.RESISTOR CH 1/10W 33	1	
R25,26		VRE0034E151	M.RESISTOR CH 1/10W 150	2	
R27		ERJ6GEYJ101	M.RESISTOR CH 1/10W 100	1	
R28,29		ERJ6GEYJ152	M.RESISTOR CH 1/10W 1.5K	2	
R30		ERJ6GEYJ330	M.RESISTOR CH 1/10W 33	1	
R31		ERJ6GEYJ101	M.RESISTOR CH 1/10W 100	1	
R32,33		ERJ6GEYJ152	M.RESISTOR CH 1/10W 1.5K	2	
R34		ERJ6GEYJ330	M.RESISTOR CH 1/10W 33	1	
R35		ERJ6GEYJ101	M.RESISTOR CH 1/10W 100	1	
R36,37		ERJ6GEYJ152	M.RESISTOR CH 1/10W 1.5K	2	
R38		ERJ6GEYJ330	M.RESISTOR CH 1/10W 33	1	
R39		VRE0034E151	M.RESISTOR CH 1/10W 150	1	
R40		VRE0034E64X	M.RESISTOR 1/10W	1	
R41		VRE0034E151	M.RESISTOR CH 1/10W 150	1	
R42		VRE0034E64X	M.RESISTOR 1/10W	1	
R43,44		VRE0034E03A	M.RESISTOR 1/10W	2	
R51,52		ERJ6GEY0R00	M.RESISTOR CH 1/10W 0	2	
R81		ERJ6GEYJ393	M.RESISTOR CH 1/10W 39K	1	
R101,02		ERJ6GEYJ222	M.RESISTOR CH 1/10W 2.2K	2	
R103		ERJ6GEYJ470	M.RESISTOR CH 1/10W 47	1	
R104		ERJ6GEYJ222	M.RESISTOR CH 1/10W 2.2K	1	
R105,06		ERJ6GEYJ151	M.RESISTOR CH 1/10W 150	2	
R107		VRE0034E750	M.RESISTOR CH 1/10W 75	1	
R108,09		ERJ6GEYJ332	M.RESISTOR CH 1/10W 3.3K	2	
R110		VRE0034E750	M.RESISTOR CH 1/10W 75	1	
R111,12		ERJ6GEYJ222	M.RESISTOR CH 1/10W 2.2K	2	
R113		ERJ6GEYJ470	M.RESISTOR CH 1/10W 47	1	
R114		ERJ6GEYJ222	M.RESISTOR CH 1/10W 2.2K	1	
R115,16		ERJ6GEYJ151	M.RESISTOR CH 1/10W 150	2	
R117		VRE0034E750	M.RESISTOR CH 1/10W 75	1	
R118		ERJ6GEYJ332	M.RESISTOR CH 1/10W 3.3K	1	
R119,20		ERJ6GEYJ222	M.RESISTOR CH 1/10W 2.2K	2	
R121		ERJ6GEYJ470	M.RESISTOR CH 1/10W 47	1	
R122		ERJ6GEYJ222	M.RESISTOR CH 1/10W 2.2K	1	
R123,24		ERJ6GEYJ151	M.RESISTOR CH 1/10W 150	2	
R125		VRE0034E750	M.RESISTOR CH 1/10W 75	1	
R126		ERJ6GEYJ332	M.RESISTOR CH 1/10W 3.3K	1	
R127-29		ERJ6GEYJ222	M.RESISTOR CH 1/10W 2.2K	3	
R130,31		ERJ6GEYJ221	M.RESISTOR CH 1/10W 220	2	
R132		VRE0034E750	M.RESISTOR CH 1/10W 75	1	
R133-35		ERJ6GEYJ222	M.RESISTOR CH 1/10W 2.2K	3	
R136		ERJ6GEYJ470	M.RESISTOR CH 1/10W 47	1	
R137		ERJ6GEYJ222	M.RESISTOR CH 1/10W 2.2K	1	
R138,39		ERJ6GEYJ221	M.RESISTOR CH 1/10W 220	2	
R140		VRE0034E750	M.RESISTOR CH 1/10W 75	1	
R141-43		ERJ6GEYJ222	M.RESISTOR CH 1/10W 2.2K	3	
R144		ERJ6GEYJ470	M.RESISTOR CH 1/10W 47	1	
R145		ERJ6GEYJ222	M.RESISTOR CH 1/10W 2.2K	1	
R146,47		ERJ6GEYJ221	M.RESISTOR CH 1/10W 220	2	
R148		VRE0034E750	M.RESISTOR CH 1/10W 75	1	
R149-51		ERJ6GEYJ222	M.RESISTOR CH 1/10W 2.2K	3	
R152		ERJ6GEYJ470	M.RESISTOR CH 1/10W 47	1	
R153		ERJ6GEYJ222	M.RESISTOR CH 1/10W 2.2K	1	
R154,55		ERJ6GEYJ221	M.RESISTOR CH 1/10W 220	2	
R156		VRE0034E750	M.RESISTOR CH 1/10W 75	1	
R157		ERJ6GEYJ222	M.RESISTOR CH 1/10W 2.2K	1	
R158		ERJ6GEYJ470	M.RESISTOR CH 1/10W 47	1	
R181		ERJ6GEYJ682	M.RESISTOR CH 1/10W 6.8K	1	
R182,83		ERJ6GEYJ103	M.RESISTOR CH 1/10W 10K	2	
R184		ERJ6GEYJ105	M.RESISTOR CH 1/10W 1M	1	
SW1,W2		VSS0307	SWITCH	2	
	■	VEP83174B	P.C.BOARD W/COMPONENT		FOR AU-63H,AU-62H
			VIDEO IN/OUT		

Ref.No.		Part No.	Part Name & Description	Pcs	Remarks
			CAPACITORS		
C2		ECEA1CKG470	E.CAPACITOR 16V 47U	1	
C3		ECUM1H103KBN	C.CAPACITOR CH 50V 0.01U	1	
C4		ECEA1CKG470	E.CAPACITOR 16V 47U	1	
C101		ECEA1CKG470	E.CAPACITOR 16V 47U	1	
C102		ECUM1H103KBN	C.CAPACITOR CH 50V 0.01U	1	
C103		ECEA1CU101	E.CAPACITOR 16V 100U	1	
C104		ECUM1H103KBN	C.CAPACITOR CH 50V 0.01U	1	
C105		ECUM1H101JCN	C.CAPACITOR CH 50V 100P	1	
C106,07		ECUM1H270JCN	C.CAPACITOR CH 50V 27P	2	
C108		ECUM1H101JCN	C.CAPACITOR CH 50V 100P	1	
C109		ECUM1H270JCN	C.CAPACITOR CH 50V 27P	1	
C110		ECUM1H101JCN	C.CAPACITOR CH 50V 100P	1	
C111		ECUM1H270JCN	C.CAPACITOR CH 50V 27P	1	
C112		ECUM1H103KBN	C.CAPACITOR CH 50V 0.01U	1	
C113		ECUM1H101JCN	C.CAPACITOR CH 50V 100P	1	
C114		ECUM1H270JCN	C.CAPACITOR CH 50V 27P	1	
C115		ECEA1CKG470	E.CAPACITOR 16V 47U	1	
C116		ECUM1H103KBN	C.CAPACITOR CH 50V 0.01U	1	
C117		ECEA1CU101	E.CAPACITOR 16V 100U	1	
C118		ECUM1H103KBN	C.CAPACITOR CH 50V 0.01U	1	
C119		ECUM1H101JCN	C.CAPACITOR CH 50V 100P	1	
C120		ECUM1H270JCN	C.CAPACITOR CH 50V 27P	1	
C121		ECUM1H101JCN	C.CAPACITOR CH 50V 100P	1	
C122		ECUM1H270JCN	C.CAPACITOR CH 50V 27P	1	
C123		ECUM1H101JCN	C.CAPACITOR CH 50V 100P	1	
C124		ECUM1H270JCN	C.CAPACITOR CH 50V 27P	1	
C125-36		ECUM1E104ZFN	C.CAPACITOR CH 25V 0.1U	12	
C181		ECUM1C104KBN	C.CAPACITOR CH 16V 0.1U	1	
C182,83		ECUM1E104ZFN	C.CAPACITOR CH 25V 0.1U	2	
CN250		VJP1879T	CONNECTOR(MALE)	1	
CN251,52		VJP1881T	CONNECTOR(MALE)	2	
CN253		VJP1876T	CONNECTOR(MALE)	1	
CN254		VJP1875T	CONNECTOR(MALE)	1	
D1		MA151WK	DIODE	1	
D101-07		MA3130-L	DIODE	7	
IC101		AN78N09	IC	1	
IC102		AN79N09	IC	1	
L1,L2		VLQEL05S101K	COIL 100UH	2	
P3		VJP1875T	CONNECTOR(MALE)	1	
Q2		2SA1226	TRANSISTOR	1	
Q101		2SB709-R	TRANSISTOR CHIP	1	(Q,R)
Q102,03		2SD601-R	TRANSISTOR CHIP	2	(Q,R)
Q104		2SB709-R	TRANSISTOR CHIP	1	(Q,R)
Q105,06		2SD601-R	TRANSISTOR CHIP	2	(Q,R)
Q107		2SB709-R	TRANSISTOR CHIP	1	(Q,R)
Q108,09		2SD601-R	TRANSISTOR CHIP	2	(Q,R)
Q110		2SB709-R	TRANSISTOR CHIP	1	(Q,R)
Q111,12		2SD601-R	TRANSISTOR CHIP	2	(Q,R)
Q113		2SB709-R	TRANSISTOR CHIP	1	(Q,R)
Q114,15		2SD601-R	TRANSISTOR CHIP	2	(Q,R)

Ref.No.		Part No.	Part Name & Description	Pcs	Remarks
Q116		2SB709-R	TRANSISTOR CHIP	1	(Q,R)
Q117,18		2SD601-R	TRANSISTOR CHIP	2	(Q,R)
Q119		2SB709-R	TRANSISTOR CHIP	1	(Q,R)
Q120,21		2SD601-R	TRANSISTOR CHIP	2	(Q,R)
Q181		UN2112	TRANSISTOR-RESISTOR	1	
Q182		2SD601-R	TRANSISTOR CHIP	1	(Q,R)
			RESISTORS		
R8,R9		VRE0034E151	M.RESISTOR CH 1/10W 150	2	
R10		ERJ6GEYJ101	M.RESISTOR CH 1/10W 100	1	
R11,12		ERJ6GEYJ152	M.RESISTOR CH 1/10W 1.5K	2	
R13		ERJ6GEYJ330	M.RESISTOR CH 1/10W 33	1	
R14		ERJ6GEYJ104	M.RESISTOR CH 1/10W 100K	1	
R101,02		ERJ6GEYJ222	M.RESISTOR CH 1/10W 2.2K	2	
R103		ERJ6GEYJ470	M.RESISTOR CH 1/10W 47	1	
R104		ERJ6GEYJ222	M.RESISTOR CH 1/10W 2.2K	1	
R105,06		ERJ6GEYJ151	M.RESISTOR CH 1/10W 150	2	
R107		VRE0034E750	M.RESISTOR CH 1/10W 75	1	
R108,09		ERJ6GEYJ332	M.RESISTOR CH 1/10W 3.3K	2	
R110		VRE0034E750	M.RESISTOR CH 1/10W 75	1	
R111,12		ERJ6GEYJ222	M.RESISTOR CH 1/10W 2.2K	2	
R113		ERJ6GEYJ470	M.RESISTOR CH 1/10W 47	1	
R114		ERJ6GEYJ222	M.RESISTOR CH 1/10W 2.2K	1	
R115,16		ERJ6GEYJ151	M.RESISTOR CH 1/10W 150	2	
R117		VRE0034E750	M.RESISTOR CH 1/10W 75	1	
R118		ERJ6GEYJ332	M.RESISTOR CH 1/10W 3.3K	1	
R119,20		ERJ6GEYJ222	M.RESISTOR CH 1/10W 2.2K	2	
R121		ERJ6GEYJ470	M.RESISTOR CH 1/10W 47	1	
R122		ERJ6GEYJ222	M.RESISTOR CH 1/10W 2.2K	1	
R123,24		ERJ6GEYJ151	M.RESISTOR CH 1/10W 150	2	
R125		VRE0034E750	M.RESISTOR CH 1/10W 75	1	
R126		ERJ6GEYJ332	M.RESISTOR CH 1/10W 3.3K	1	
R127-29		ERJ6GEYJ222	M.RESISTOR CH 1/10W 2.2K	3	
R130,31		ERJ6GEYJ221	M.RESISTOR CH 1/10W 220	2	
R132		VRE0034E750	M.RESISTOR CH 1/10W 75	1	
R133-35		ERJ6GEYJ222	M.RESISTOR CH 1/10W 2.2K	3	
R136		ERJ6GEYJ470	M.RESISTOR CH 1/10W 47	1	
R137		ERJ6GEYJ222	M.RESISTOR CH 1/10W 2.2K	1	
R138,39		ERJ6GEYJ221	M.RESISTOR CH 1/10W 220	2	
R140		VRE0034E750	M.RESISTOR CH 1/10W 75	1	
R141-43		ERJ6GEYJ222	M.RESISTOR CH 1/10W 2.2K	3	
R144		ERJ6GEYJ470	M.RESISTOR CH 1/10W 47	1	
R145		ERJ6GEYJ222	M.RESISTOR CH 1/10W 2,2K	1	
R146,47		ERJ6GEYJ221	M.RESISTOR CH 1/10W 220	2	
R148		VRE0034E750	M.RESISTOR CH 1/10W 75	1	
R149-51		ERJ6GEYJ222	M.RESISTOR CH 1/10W 2.2K	3	
R152		ERJ6GEYJ470	M.RESISTOR CH 1/10W 47	1	
R153		ERJ6GEYJ222	M.RESISTOR CH 1/10W 2.2K	1	
R154,55		ERJ6GEYJ221	M.RESISTOR CH 1/10W 220	2	
R156		VRE0034E750	M.RESISTOR CH 1/10W 75	1	
R157		ERJ6GEYJ222	M.RESISTOR CH 1/10W 2.2K	1	
R158		ERJ6GEYJ470	M.RESISTOR CH 1/10W 47	1	
R181		ERJ6GEYJ682	M.RESISTOR CH 1/10W 6.8K	1	
R182,83		ERJ6GEYJ103	M.RESISTOR CH 1/10W 10K	2	
R184		ERJ6GEYJ105	M.RESISTOR CH 1/10W 1M	1	
SW2		VSS0307	SWITCH	1	
	■	VEP80621A	P.C.BOARD W/COMPONENT		FOR AU-65H
			VIDEO VR		

Ref.No.		Part No.	Part Name & Description	Pcs	Remarks
P128		VJP1246T	CONNECTOR(MALE) 6P	1	
VR1		EVU023020B14	V.RESISTOR 10K	1	
VR2		EVUL7A020B54	V.RESISTOR 50K	1	
	■	VEP80574A	P.C.BOARD W/COMPONENT		FOR AU-65H,AU-63H
			YC IN/OUT		AU-62H
CN270		VJP1244T	CONNECTOR(MALE) 4P	1	
J201		VJS2579	CONNECTOR (FEMALE)	1	
	■	VEP80551A	P.C.BOARD W/COMPONENT		FOR AU-65H,AU-63H
			9P REMOTE		AU-62H
CN280		VJP1235T	CONNECTOR(MALE) 8P	1	
9P.1		VJS2642A009	CONNECTOR (FEMALE)	1	

MECHANICAL REPLACEMENT PARTS LIST

CASING FRAME ASSEMBLY

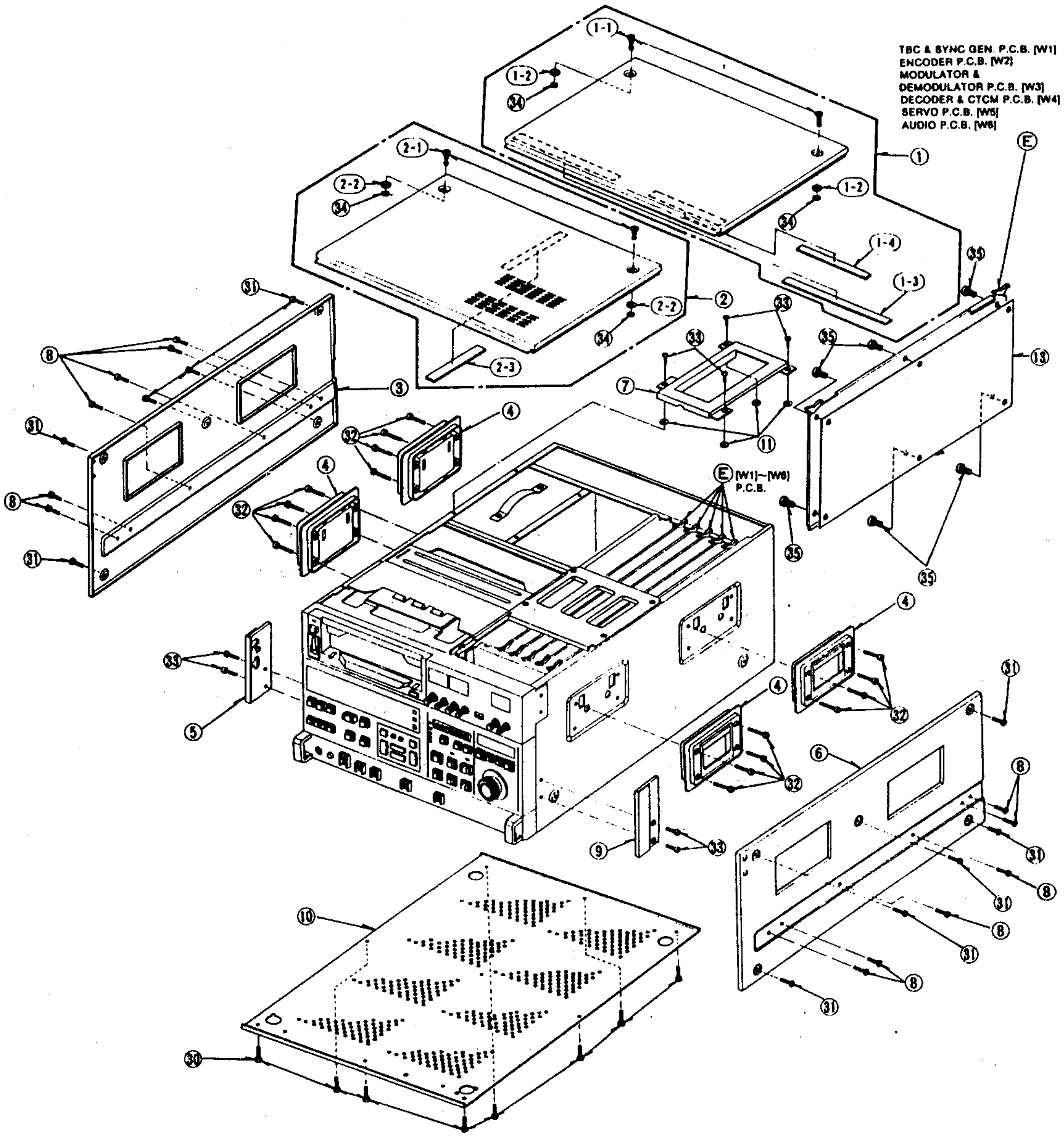
TBC & SYNC GEN. P.C.B. [W1]
ENCODER P.C.B. [W2]
MODULATOR &
DEMODULATOR P.C.B. [W3]
DECODER & CTCM P.C.B. [W4]
SERVO P.C.B. [W5]
AUDIO P.C.B. [W6]
Ⓔ
(1-1)
(1-2)
㉞
①
(1-2)
㉞
(1-4)
(1-3)
㉟
(2-1)
(2-2)
㉞
(2-2)
㉞
②
(2-3)
㉛
⑧
③
㉝
㉝
⑦
⑪
㉟
⑬
④
㉜
④
㉜
Ⓔ [W1]~[W6] P.C.B.
㉟
㉟
⑧
㉛
④
㉛
㉝
⑤
④
㉜
㉜
⑥
⑧
⑨
㉝
㉛
⑧
⑩
㉛
⑧
㉛
⑧
㉛
㉚

CASING FRAME ASSEMBLY

Ref.No.		Part No.	Part Name & Description	Pcs	Remarks
1		VYP2980	REAR TOP COVER UNIT	1	
1-1		VHD0274	TOP COVER SCREW	2	
1-2		VMX0835	TOP COVER SPACER (SCREW)	2	
1-3		VMX1835	REAR TOP COVER SPACER (A)	1	
1-4		VMT0119	P.C.B. PRESSURE RUBBER	1	
2		VYP2979	FRONT TOP COVER UNIT	1	
2-1		VHD0274	TOP COVER SCREW	2	
2-2		VMX0835	TOP COVER SPACER (SCREW)	2	
2-3		VMX1836	FRONT TOP COVER SPACER (B)	1	
3		VGM0610	LEFT SIDE COVER	1	
4		VYH0128	HANDLE	4	
5		VYK1492	LEFT SIDE PANEL PLATE UNIT	1	
6		VGM0609	RIGHT SIDE COVER	1	
7		VMP2597	POWER UNIT MOUNT ANGLE	1	
8		VHD0153	RAIL MOUNT SCREW	12	
9		VYK1491	RIGHT SIDE PANEL PLATE UNIT	1	
10		VGM0591	BOTTOM PLATE	1	
11		VMX1558	WASHER	4	
13		VXA3966	W P.C.B. SHIELD PLATE	6	5pcs: AU-63H, AU-62H
30		XSB3+6S	SCREW	8	
31		XSB4+8FCS	SCREW	10	
32		XSB4+16FCS	SCREW	16	
33		XTV3+6F	SCREW	8	
34		XUC3FP	E-RING	4	
35		XYNV3+K6FR	SCREW	6	

MECHANICAL CHASSIS ASSEMBLY (1)

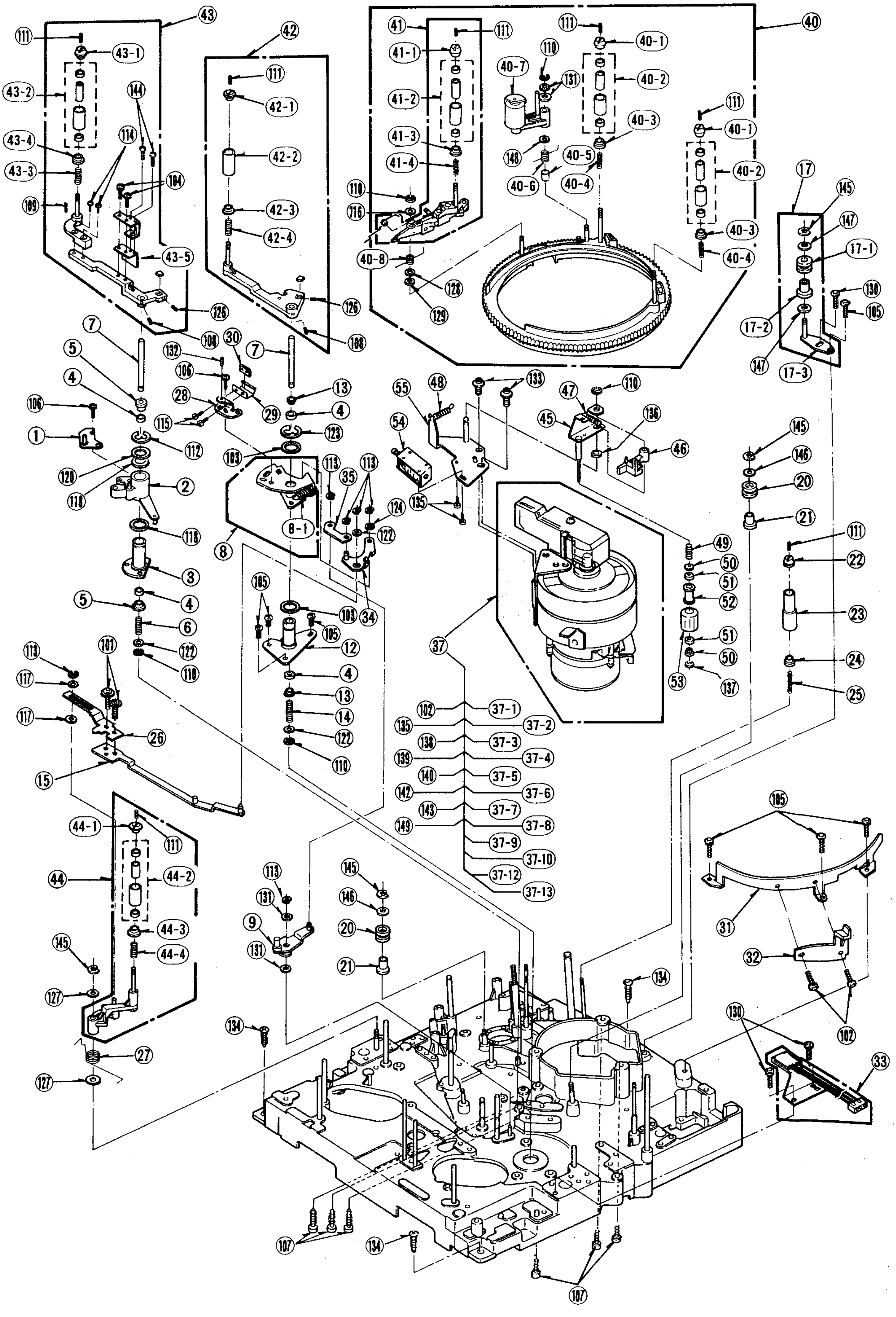

43
111
43-1
43-2
144
43-4
114
43-3
104
109
43-5
126
108
42
111
42-1
42-2
42-3
42-4
126
108
41
111
41-1
110
40-7
131
41-2
41-3
148
41-4
40-5
40-6
40-4
110
116
40-8
128
129
111
40-1
40-2
40-3
40
111
40-1
40-2
40-3
40-4
17
145
147
17-1
130
105
17-2
147
17-3
7
5
4
106
1
112
120
118
2
118
3
5
4
6
122
119
132
30
106
28
29
115
7
13
4
123
103
8-1
8
113
35
113
124
122
34
105
103
105
12
4
13
14
122
110
55
48
133
54
135
47
110
136
45
46
37
49
50
51
52
53
51
50
137
145
146
20
21
111
22
23
24
25
102
37-1
135
37-2
138
37-3
37-4
139
140
37-5
37-6
142
143
37-7
149
37-8
37-9
37-10
37-12
37-13
113
117
101
117
26
15
44-1
111
44
44-2
44-3
44-4
145
127
27
127
113
131
9
131
145
146
20
21
134
134
134
105
31
32
102
130
33
107
134
107

MECHANICAL CHASSIS ASSEMBLY (1)

Ref.No.		Part No.	Part Name & Description	Pcs	Remarks
1		VXA2302	STOPPER PIN BASE UNIT	1	
2		VXL1309	SUPPLY TA SUB-ARM (1) UNIT	1	
3		VDB0772	SUPPLY TENSION SUPORT HOUSING	1	
4		VDB0779	BEARING	4	
5		VMX0794	BEARING RETAINER	2	
6		VMB1378	POST SPRING	1	
7		VMS3662	PANEL FIXTURE (LEFT)	2	
8		VXA4001	TAKE-UP DRAW OUT ARM UNIT	1	
8-1		VMB2131	TAKE-UP TENSION CHARGE SPRING	1	
9		VXA3994	TAKE-UP DRAW-UP DRIVE LEVER UNIT	1	
12		VXD0126	TAKE-UP TENSION HOUSING	1	
13		VMX0794	BEARING RETAINER	2	
14		VMB1377	POST SPRING	1	
15		VXA4003	P1 ARM DRIVE ROD II UNIT	1	
17		VXR0206	RING ROLLER UNIT	1	
17-1		VDP1360	RING ROLLER	1	
17-2		VDB1079	RING ROLLER BOSS	1	
17-3		VXA4252	RING ROLLER (1) UNIT	1	
20		VDP1360	RING ROLLER	2	
21		VDB1079	RING ROLLER BOSS	2	
22		VMS3712	UPPER FLANGE (P4)	1	
23		VXP0824	LIMITER ROLLER (B) UNIT	1	
24		VMS2806	POST BEARING RETAINER (A) (P4)	1	
25		VMB1379	POST SPRING (P3)	1	
26		VMM0237	P1 ARM DRIVE ROD (I)	1	
27		VMB1362	P1 ARM DRAW-OUT SPRING	1	
28		VMA8178	TAKE-UP TENSION REGULATING PLATE	1	
29		VMC0595	TAKE-UP TENSION LEAF SPRING	1	
30		VMA8181	FIXING PLATE	1	
31		VMA6652	TURN ROLLER LIFTER	1	
32		VML1780	STOPPER ARM	1	
33		VEK3785	TAKE-UP MAGNETIC SENSOR UNIT	1	
34		VXA4002	STOPPER ARM UNIT	1	
35		VMM0236	DRAW-OUT ROD	1	
37		VEG0837	DRUM UNIT	1	AU-65H
37		VEG0839	DRUM UNIT	1	AU-63H
37		VEG0838	DRUM UNIT	1	AU-62H
37-1		VEH0494	UPPER DRUM UNIT	1	AU-65H,AU-62H
37-1		VEH0495	UPPER DRUM UNIT	1	AU-63H
37-2		VMD1572	RT ARM BLOCK	1	
37-3		VEK2372	DEW SENSOR	1	
37-4		VSC1334	SHIELD PLATE	1	
37-5		VAG0273	TAPE GUIDE	1	
37-6		VSC2693	SHIELD BAND	1	
37-7		VXS0102	BRUSH UNIT	1	AU-63H
37-8		VXS0092	SLIP-RING UNIT	1	AU-63H
37-9		VEG0781	LOWER DRUM UNIT	1	AU-65H
37-9		VEG0812	LOWER DRUM UNIT	1	AU-63H
37-9		VEG0809	LOWER DRUM UNIT	1	AU-62H
37-10		VMD1612	BRUSH COVER	1	AU-63H
37-12		VMA8157	EARTH ANGLE	1	AU-65H
37-13		VXS0096	EARTH BRUSH	1	AU-65H
40		VXP1182	LOADING RING UNIT	1	
40-1		VMS3638	UPPER FLANGE	2	
40-2		VXP0821	POST ROLLER (B) UNIT	2	
40-3		VMS2803	LOWER FLANGE	2	
40-4		VMB1377	POST SPRING	2	
40-5		VMX1406	PINCH ARM SHAFT COLLAR	1	
40-6		VMB1373	PINCH ROLLER RETURN SPRING	1	
40-7		VXL1288	PINCH ROLLER ARM UNIT	1	
40-8		VMB1796	TR ARM RETURN SPRING A	1	
41		VXL1754	TURN ROLLER ARM UNIT	1	
41-1		VMS3638	UPPER FLANGE	1	
41-2		VXP0821	POST ROLLER (B) UNIT	1	
41-3		VMS2803	LOWER FLANGE	1	
41-4		VMB1376	POST SPRING	1	
42		VXL2189	TAKE-UP TENSION ARM UNIT	1	
42-1		VMS4571	UPPER FLANGE (P1)	1	
42-2		VXP0820	POST ROLLER (A) UNIT	1	
42-3		VMS2800	LOWER FLANGE (P3)	1	
42-4		VMB1378	POST SPRING	1	
42-5		VXL1991	TAKE-UP TENSION ARM UNIT	1	
43		VXL1320	SUPPLY TENSION ARM UNIT	1	
43-1		VMS4572	UPPER FLANGE (P2)	1	
43-2		VXP0820	POST ROLLER (A) UNIT	1	
43-3		VMB1378	POST SPRING	1	
43-4		VMS2801	LOWER FLANGE (P2)	1	
43-5		VMC0119	SUPPLY TENSION LEAF SPRING	1	
44		VXL1323	DRAW-OUT ARM UNIT	1	
44-1		VMS3639	UPPER FLANGE (P1)	1	
44-2		VXP0820	POST ROLLER (A) UNIT	1	
44-3		VMS2800	LOWER FLANGE (P3)	1	
44-4		VMB1378	POST SPRING	1	
45		VXL1994	CLEANER ARM (A) UNIT	1	
46		VML2393	CLEANER ARM (B)	1	
47		VMB2128	ROLLER PRESSURE SPRING	1	
48		VMB2129	ROLLER SPRING	1	
49		VMB1379	POST SPRING (P3)	1	
50		VMX1161	P4 BEARING PRESSURE	2	
51		VDB0778	BEARING	2	
52		VDP1321	CLEANEAR ROLLER	1	
53		VMT0321	CLEANER	1	
54		VSJ0096	CLEANER SOLENOID	1	
55		VXA4016	CLEANER BASE UNIT	1	
56		VXA4013	T-STOPPER PIN BASE UNIT	1	
101		XYN26+F5FZS	SCREW	2	
102		XYN26+C4	SCREW	3	
103		XWGV93D13G	WASHER	2	
104		XYNV26+K8	SCREW	2	
105		XTV3+6F	SCREW	7	
106		XYNV26+K5	SCREW	2	
107		XYNV3+K10S	SCREW	6	
108		XXE26W3FP	HEX HEAD SCREW	2	
109		XXE26A4FP	HEX HEAD SCREW	1	
110		XUC25FP	E RING	4	
111		XXE2C25FP	HEX HEAD SCREW	8	
112		XUC8FP	E RING	1	
113		XUC2FP	E RING	6	
114		XSN2+6	SCREW	2	
115		XYN2+C4	SCREW	2	
116		XWGV3Y6G	WASHER	1	
117		XWGV25D5G	WASHER	2	
118		XWGV10D15G	WASHER	2	
120		XWGV10Y15G	WASHER	1	
122		XWG3	WASHER	3	
123		XUC7FP	E RING	1	
124		XWGV3Y6G	WASHER	1	
126		XXE2D3FP	HEX HEAD SCREW	2	
127		XWGV4D9G	WASHER	1	
128		XWGV3D8G	WASHER	1	
129		XWGV3Y8G	WASHER	1	
130		XTV3+6FFZ	SCREW	3	
131		XWGV3D6G	WASHER	4	
132		XXE2C8FP	HEX HEAD SCREW	1	
133		XYN3+F6FZS	SCREW	2	
134		XYN4+C10S	SCREW	3	
135		XYN2+C3	SCREW	3	
136		XWGV3D6G	WASHER	1	
137		XUC15FP	E-RING	1	
138		XYN3+C6	SCREW	4	
139		XYN3+A10BW	SCREW	2	
140		XYN2+C3	SCREW	1	
142		XYN3+A4	SCREW	1	AU-65H,AU62H
143		XYN26+C6	SCREW	3	
144		XSN2+4	SCREW	2	
145		XUC3FP	E-RING	4	
146		XWGV4D7G	WASHER	2	
147		XWGV4F7G	WASHER	2	
148		XWGV3Z6G	WASHER	1	
149		XYNV0015	SCREW	1	AU-63H

MECHANICAL CHASSIS ASSEMBLY (2)

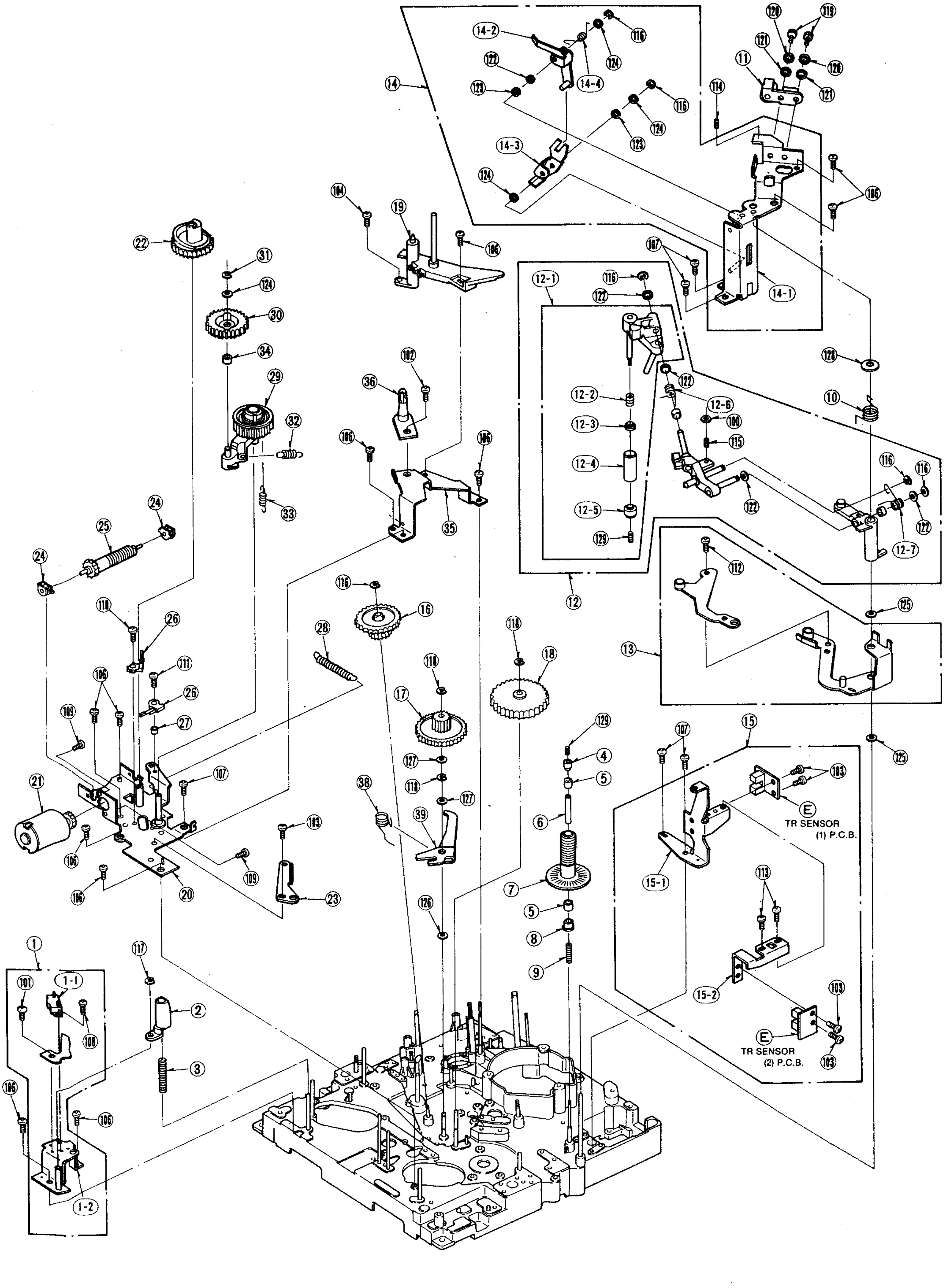

14-2
116
120
119
121
122
124
120
11
14-4
14
123
116
114
121
124
123
14-3
124
106
104
19
22
106
31
124
107
12-1
116
122
14-1
30
34
102
36
29
32
122
126
10
12-2
12-3
12-6
100
115
106
106
12-4
116
116
33
35
12-5
122
12-7
24
25
24
129
112
116
16
125
110
26
28
118
18
12
13
111
106
26
27
109
17
129
107
15
4
125
21
107
127
118
127
5
103
38
39
6
E
TR SENSOR
(1) P.C.B.
106
109
103
23
7
15-1
106
20
113
126
5
8
1
117
9
101
1-1
2
108
103
15-2
3
E
TR SENSOR
(2) P.C.B.
103
106
106
1-2

MECHANICAL CHASSIS ASSEMBLY (2)

Ref.No.		Part No.	Part Name & Description	Pcs	Remarks
1		VES0565	DETECTION BIT (L) UNIT	1	
1-1		EVQWUS002	CASSETTE ID MODE SWITCH	1	
1-2		VXA4000	DETECTION BIT (L) (1) UNIT	1	
2		VMD1147	CASSETTE GUIDE S	1	
3		VMB1832	CASSETTE GUIDE S SPRING	1	
4		VHN0046	TIMER ROLLER NUT	1	
5		VDB0778	BEARING	2	
6		VMX0801	TIMER ROLLER INNER COLLAR	1	
7		VXP1183	TIMER ROLLER UNIT	1	
8		VMS2806	POST BEARING RETAINER (A) (P4)	1	
9		VMB1379	POST SPRING (P3)	1	
10		VMB1801	P10 RETURN SPRING	1	
11		VXA2525	TILT ADJUST BASE UNIT	1	
12		VXL1786	SUB-LOADING ARM UNIT	1	
12-1		VXR0131	IP BASE UNIT	1	
12-2		VMB1376	POST SPRING	1	
12-3		VMS2870	BEARING RETAINER	1	
12-4		VXP0822	POST BEARING (C) UNIT	1	
12-5		VMS3638	UPPER FLANGE	1	
12-6		VMB1368	TILT RETURN SPRING	1	
12-7		VMB1375	IP ARM RETURN SPRING	1	
13		VXL2066	ROLLER ARM (C) UNIT	1	
14		VXA3990	SUB-LOADING COVER ASSEMBLY	1	
14-1		VXA3996	SUB-LOADING COVER (1) UNIT	1	
14-2		VXL1294	UPRIGHT LEVER UNIT	1	
14-3		VML1694	UPRIGHT DRIVE LEVER	1	
14-4		VMB1762	UPRIGHT LEVER RETURN SPRING	1	
15		VXA3989	TR SENSOR ANGLE UNIT	1	
15-1		VMA8171	TR SENSOR ANGLE (I)	1	
15-2		VMA8172	TR SENSOR ANGLE (II)	1	
16		VDG0667	RING JUNCTION GEAR (I)	1	
17		VDG0668	RING JUNCTION GEAR (II)	1	
18		VDG0669	GEAR WITH CAM	1	
19		VXA4011	PINCH ROLLER GUIDE UNIT	1	
20		VXA3997	CASSETTE REEL BASE S (I) UNIT	1	
21		VEM0264	MOTOR UNIT	1	
22		VDG0666	CAM WORM WHEEL	1	
23		VMA8170	POSITIONING PLATE	1	
24		VDB0833	WORM BEARING	2	
25		VXP1019	CASSETTE S WORM SHAFT UNIT	1	
26		VSH0026	LEAF SWITCH	2	
27		VMX0400	LEAF SWITCH SPACER	1	
28		VMB2132	BALANCING SPRING 1	1	
29		VXA3999	CASSETTE S REEL STAND BASE (1) UNIT	1	
30		VDG0670	CASSETTE S REEL INTERMEDIATE GEAR	1	
31		VMX0653	CUT WASHER	1	
32		VMB2140	INTERMEDIATE GEAR SPRING	1	
33		VMB2141	CASSETTE S REEL STAND SPRING	1	
34		VDB0429	BEARING	1	
35		VMA8177	LAMP MOUNT BASE	1	
36		VEK3493	LAMP MOUNT (1) UNIT	1	
38		VMB2135	SUPPLY DRIVE ARM RETURN SPRING	1	
39		VML2387	SUPPLY TENSION DRIVE ARM	1	
100		XNG3CS	NUT	1	
101		XSN2+3	SCREW	1	
102		XSS26+5	SCREW	1	
103		XTV26+4F	SCREW	5	
104		XTV26+8F	SCREW	1	
106		XTV3+6F	SCREW	11	
107		XTV3+8F	SCREW	5	
108		XQN16+A3	SCREW	1	
109		XYN2+C4	SCREW	2	
110		XYN2+C5	SCREW	1	
111		XYN2+C8	SCREW	1	
112		XYN26+F5FZ	SCREW	1	
113		XYN26+F6FZ	SCREW	2	
114		XXE3A6FPS	HEX HEAD SCREW	1	
115		XXE3C6FP	HEX HEAD SCREW	1	
116		XUC25FP	E-RING	6	
117		XUC2FP	E-RING	1	
118		XUC3FP	E-RING	3	
119		XVE3B6FPS	HEX HEAD SCREW	2	
120		XWA3B	WASHER	2	
121		XWE3	WASHER	2	
122		XWGV3D6G	WASHER	5	
123		XWGV3F6G	WASHER	2	
124		XWGV3Y6G	WASHER	4	
125		XWGV4D7G	WASHER	2	
126		XWGV4F7G	WASHER	1	
127		XWGV4Y7G	WASHER	2	
128		XWGV4Y9G	WASHER	1	
129		XXE2C25FP	HEX HEAD SCREW	2	

MECHANICAL CHASSIS ASSEMBLY (3)

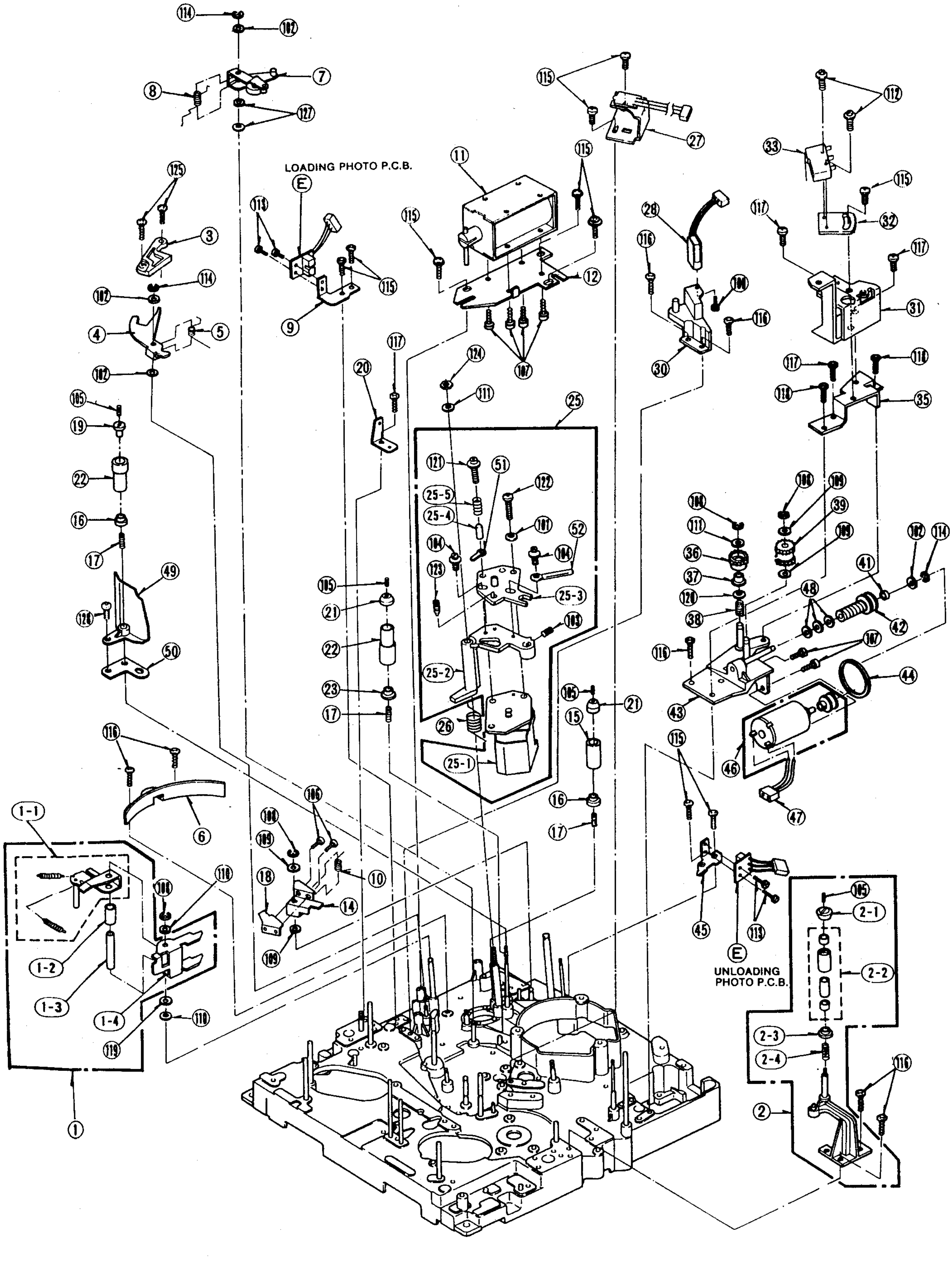
114
102
7
8
127
115
27
112
33
115
32
117
117
31
125
3
LOADING PHOTO P.C.B.
E
113
115
11
115
12
115
107
28
116
100
116
30
114
102
4
5
102
9
117
20
124
111
25
117
118
118
35
105
19
22
16
17
49
128
50
121
51
122
25-5
25-4
101
52
104
104
123
25-3
103
25-2
26
25-1
105
21
22
23
17
105
21
15
16
17
108
109
39
109
100
111
36
37
120
38
48
41
102
114
42
107
116
43
44
46
47
115
45
113
E
UNLOADING PHOTO P.C.B.
116
6
1-1
108
109
106
18
10
14
109
110
108
1-2
1-3
1-4
119
110
1
105
2-1
2-2
2-3
2-4
116
2

MECHANICAL CHASSIS ASSEMBLY (3)

Ref.No.		Part No.	Part Name & Description	Pcs	Remarks
1		VXL1679	PINCH PRESSURE LEVER UNIT	1	
1-1		VXL1680	PINCH DRIVE ARM UNIT	1	
1-2		VMX0800	PINCH COLLAR (3)	1	
1-3		VMX0799	PINCH COLLAR (2)	1	
1-4		VML1675	PINCH PRESSURE LEVER	1	
2		VXA3226	CASSETTE POSITIONING BASE UNIT	1	
2-1		VMS3638	UPPER FLANGE	1	
2-2		VXP0821	POST ROLLER (B) UNIT	1	
2-3		VMS2803	LOWER FLANGE	1	
2-4		VMB1376	POST SPRING	1	
3		VMA7289	STOPPER RETAINER	1	
4		VML1702	TR STOPPER LEVER	1	
5		VMB1372	STOPPER LEVER RETURN SPRING	1	
6		VMD1412	TURN ROLLER GUIDE A	1	
7		VXL1995	DRIVE ARM UNIT	1	
8		VMB2134	DRIVE ARM RETURN SPRING	1	
9		VMA6624	LOADING PHOTO PLATE	1	
10		VMB1345	UNLOADING DETECTION RETURN SPRING	1	
11		VSJ0069	PINCH SOLENOIDE	1	
12		VMA6608	PINCH SOLENOIDE BASE	1	
14		VML2091	UNLOADING DETECTION ARM	1	
15		VXP0819	POST ROLLER (A1) UNIT (P6)	1	
16		VMS2800	LOWER FLANGE (P3)	2	
17		VMB1379	POST SPRING (P3)	3	
18		VMA6685	TURN ROLLER RETAINER	1	
19		VMS2807	POST BEARING RETAINER (B) (P3)	1	
20		VMA6625	PINCH RETURN SPRING HOOK	1	
21		VMS3712	UPPER FLANGE (P4)	2	
22		VXP0823	LIMITER ROLLER (A) UNIT (P3)	2	
23		VMS2806	POST BEARING RETAINER (A) (P4)	1	
25		VED0140	A/C HEAD UNIT	1	AU-65H
25		VED0142	A/C HEAD UNIT	1	AU-63H,AU-62H
25-1		VBR0167	A/C HEAD	1	AU-65H
25-1		VBR0168	A/C HEAD	1	AU-63H,AU-62H
25-2		VMD1579	A/C HEAD HEIGHT ADJUSTMENT BASE	1	
25-3		VXA4085	HEAD MOUNTING BASE UNIT	1	
25-4		VMX1441	ADJUST LOCK COLLAR	1	
25-5		VMB1843	ADJUST SPRING	1	
26		VMB2147	HEAD SPRING	1	
27		VEK3784	SUPPLY MAGNETIC SENSOR MOUNT UNIT	1	
28		VBS0024	FE HEAD	1	AU-65H
28		VBS0043	FE HEAD	1	AU-63H,AU-62H
30		VMA7293	FE HEAD BASE	1	
31		VMA7295	MICROSWITCH BASE	1	
32		VMA6715	MICROSWITCH REGULATING PLATE	1	
33		VSM0042	MICROSWITCH	1	
35		VMA6805	MOTOR HOLDER COVER	1	
36		VDG0215	RING DRIVE GEAR	1	
37		VMX1405	DRIVE GEAR SLEEVE A	1	
38		VMB1343	DRIVE GEAR PRESSURE SPRING	1	
39		VDG0216	JUNCTION GEAR	1	
41		VDB0899	BEARING	1	
42		VXP1056	WORM PULLEY UNIT	1	
43		VXA2287	LOADING MOTOR HOLDER UNIT	1	
44		VDV0156	LOADING BELT	1	
45		VMA6623	UNLOADING PHOTO MOUNT	1	
46		VEM0323	LOADING MOTOR UNIT	1	
46-1		VRD0030	LOADING MOTOR	1	
47		VEE3971	CONNECTOR UNIT	1	
48		VDB0371	THRUST BEARING	3	
49		VMD1596	DO PROTECTOR COVER	1	
50		VMA8285	DO PROTECTOR COVER BASE	1	
51		VJR3	CLAMPER	1	
52		VJR3	CLAMPER	1	AU-65-P,AU-65-E

Ref.No.		Part No.	Part Name & Description	Pcs	Remarks
100		XYN2+C5	SCREW	1	
101		XWG26	WASHER	1	
102		XWGV3D6G	WASHER	4	
103		XXE3C6FP	HEX HEAD SCREW	1	
104		XYN26+F6	SCREW	2	
105		XXE2C25FP	HEX HEAD SCREW	4	
106		XYN26+C4	SCREW	2	
107		XYN3+C5S	SCREW	6	
108		XUC3FP	E RING	4	
109		XWGV4D7G	WASHER	4	
110		XWGV4D9G	WASHER	2	
111		XWE4	WASHER	2	
112		XYN2+F10	SCREW	2	
113		XTV26+4F	SCREW	4	
114		XUC25FP	E RING	3	
115		XTV3+6FFZ	SCREW	10	
116		XTV3+8F	SCREW	7	
117		XTV3+6F	SCREW	4	
118		XTV3+10F	SCREW	2	
119		XWGV5D9G	WASHER	1	
120		XWG4FC	WASHER	1	
121		XYN3+F18	SCREW	1	
122		XSN26+12S	SCREW	1	
123		XXE3A8FP	HEX HEAD SCREW	1	
124		XNG4ES	NUT	1	
125		XTV26+6F	SCREW	2	
127		XWGV3F6G	WASHER	2	
128		XSN26+4	SCREW	1	

MECHANICAL CHASSIS ASSEMBLY (4)

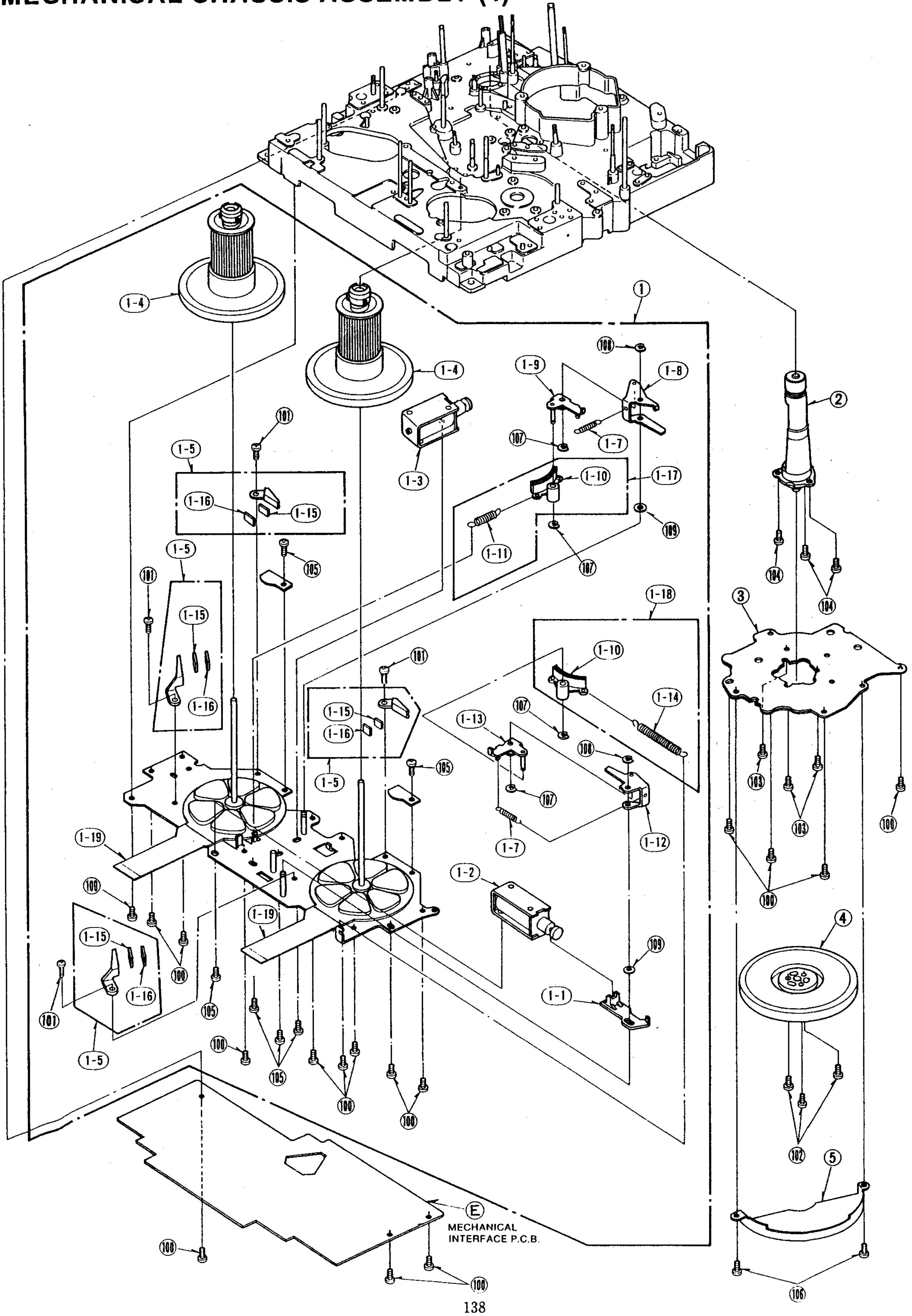

1-4
1-4
1
108
1-9
1-8
2
1-7
107
1-3
101
1-5
1-10
1-17
1-16
1-15
109
1-11
107
1-5
105
101
1-15
1-16
1-18
3
104
104
1-10
101
1-14
107
1-13
1-15
1-16
105
108
103
103
100
1-5
107
1-19
1-7
1-12
100
100
1-2
1-19
4
1-15
109
100
1-16
105
101
1-1
1-5
100
105
100
100
102
5
E
MECHANICAL
INTERFACE P.C.B.
100
100
106

MECHANICAL CHASSIS ASSEMBLY (4)

Ref.No.		Part No.	Part Name & Description	Pcs	Remarks
1		VXA4777	REEL BASE UNIT	1	
1-1		VMM0240	BRAKE RELEASE ROD	1	
1-2		VSJ0098	TAKE-UP BRAKE SOLENOID	1	
1-3		VSJ0097	SUPPLY BARAKE SOLENOID	1	
1-4		VXR0191	REEL STAND UNIT	2	
1-5		VXA2046	FG HOLDER UNIT	4	
1-7		VMB2139	BRAKE SPRING (II)	2	
1-8		VXL1996	SUPPLY BRAKE ARM (1) UNIT	1	
1-9		VXL1997	SUPPLY BRAKE ARM (2) UNIT	1	
1-10		VXL1998	SUPPLY BRAKE ARM (3) UNIT	2	
1-11		VMB2137	SUPPLY BRAKE SPRING (II)	1	
1-12		VXL1999	TAKE-UP BRAKE ARM (1) UNIT	1	
1-13		VXL2000	TAKE-UP BRAKE ARM (2) UNIT	1	
1-14		VMB2138	TAKE-UP BRAKE SPRING (I)	1	
1-15		HW-300B	HALL ELEMENT	4	
1-16		VMD0621	FG SUPPORT (2)	4	
1-17		VXA4004	SUPPLY BRAKE ARM (3) UNIT	1	
1-18		VXA4005	TAKE-UP BRAKE ARM (3) UNIT	1	
1-19		VWJ0356	FLAT WIRE	2	
2		VXD0110	CAPSTAN HOUSING UNIT	1	
3		VEK3699	CAPSTAN STATOR UNIT	1	
4		VXP1235	ROTOR UNIT	1	
5		VSC2066	CAPSTAN MOTOR COVER	1	
100		XTV3+6F	SCREW	16	
101		XYN2+F4	SCREW	4	
102		XYN2+C10	SCREW	3	
103		XYN2+C6V	SCREW	3	
104		XYN26+C7V	SCREW	3	
105		XYN26+F4	SCREW	6	
106		XYNV26+K4S	SCREW	2	
107		XUC15FP	E RING	4	
108		XUC25FP	E RING	2	
109		XWGV3D6G	WASHER	2	

FRONT PANEL ASSEMBLY (AU-65H)

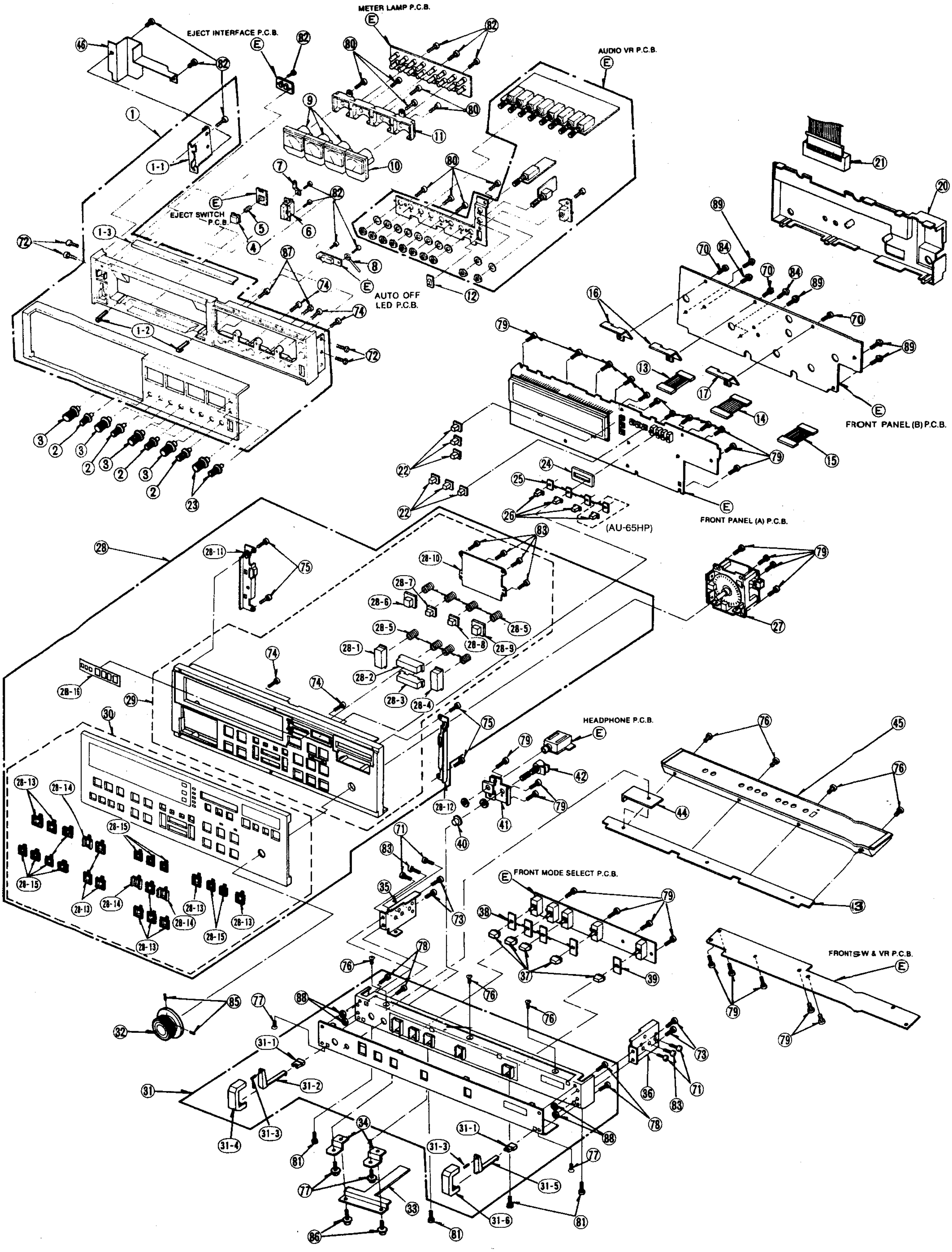
METER LAMP P.C.B.
EJECT INTERFACE P.C.B.
AUDIO VR P.C.B.
EJECT SWITCH P.C.B.
AUTO OFF LED P.C.B.
FRONT PANEL (B) P.C.B.
FRONT PANEL (A) P.C.B.
(AU-65HP)
HEADPHONE P.C.B.
FRONT MODE SELECT P.C.B.
FRONT SW & VR P.C.B.
Ⓔ
①
1-1
1-2
1-3
②
③
④
⑤
⑥
⑦
⑧
⑨
⑩
⑪
⑫
⑬
⑭
⑮
⑯
⑰
⑳
㉑
㉒
㉓
㉔
㉕
㉖
㉗
㉘
28-1
28-2
28-3
28-4
28-5
28-6
28-7
28-8
28-9
28-10
28-11
28-12
28-13
28-14
28-15
28-16
㉙
㉚
㉛
31-1
31-2
31-3
31-4
31-5
31-6
㉜
㉝
㉞
㉟
㊱
㊲
㊳
㊴
㊵
㊶
㊷
43
44
45
46
70
71
72
73
74
75
76
77
78
79
80
81
82
83
84
85
86
87
88
89

FRONT PANEL ASSEMBLY (AU-65H)

Ref.No.	Part No.	Part Name & Description	Pcs	Remarks
1	VYP4151	UPPER FRONT PANEL (1) UNIT	1	
1-1	VMP1006	GND ANGLE	1	
1-2	VGK1511	CASSETTE GUIDE	2	
1-3	VMP0830	FRONT (U) PROTECTOR ANGLE	1	
2	VXU0768	VR KNOB (S)	4	
3	VXU0766	VR KNOB (B)	4	
4	VGU3394	EJECT BUTTON	1	
5	VMB1730	EJECT BUTTON SPRING	1	
6	EST15367S	POWER SWITCH	1	
7	VMP1008	EJECT SWITCH ANGLE	1	
8	VJR3	CLUMPER	1	
9	VSE0101	AUDIO METER	3	
10	VSE0103	TRACKING METER	1	
11	VGQ1051	METER COVER	1	
12	VGU3388	SWITCH KNOB	1	
13	VEE3171	CONNECTOR CABLE	1	
14	VEE3170	CONNECTOR CABLE	1	
15	VEE3799	CONNECTOR CABLE	1	
16	VMP0964	P.C.B. SUPPORT ANGLE (A)	2	
17	VMP1926	P.C.B. SUPPORT ANGLE (B)	1	
20	VGP3137	FRONT BOARD CAVER	1	
21	VEC0628	20P FLAT CABLE	1	
22	VGU4359	RESET BUTTON	6	
23	VXU0769	TRACKING VR KNOB	1	
24	VMX1328	SLIDE SWITCH SPACER	1	
25	VGH0520	SWITCH COVER	3	
26	VGU2089	SLIDE SWITCH KNOB	3	
27	VSR0083	SEARCH DIAL	1	
28	VYP3530	FRONT PANEL (M) 1 UNIT	1	
28-1	VGU4117	EDIT IN BUTTON	1	
28-2	VGU4116	EDIT SET BUTTON	1	
28-3	VGU4115	GO-TO BUTTON	1	
28-4	VGU4118	EDIT OUT BUTTON	1	
28-5	VMB1799	SPRING	8	
28-6	VGU4119	AUDIO IN BUTTON	1	
28-7	VGU4114	TRIM (-) BUTTON	1	
28-8	VGU4113	TRIM (+) BUTTON	1	
28-9	VGU4120	AUDIO OUT BUTTON	1	
28-10	VMP1529	EDIT BUTTON GUIDE	1	
28-11	VMP0562	PANEL HOLDER ANGLE (L)	1	
28-12	VMP0561	PANEL HOLDER ANGLE (R)	1	
28-13	VGK1595	SWITCH GUARD	11	
28-14	VGF0206	SWITCH GUARD	3	
28-15	VGK1512	SWITCH GUARD	10	
28-16	VGH2627	TC BUTTON NAME PLATE	1	
29	VYP2203	FRONT PANEL (M) 2 UNIT	1	
30	VYP3529	FRONT ALMINUM PANEL UNIT	1	
31	VYP4047	CONTROL PANEL (1) UNIT	1	
31-1	VGF0147	HANDLE COVER	2	
31-2	VML1657	LOCK RELEASE LEAVER (L)	1	
31-3	VMB1333	SPRING	2	
31-4	VKH0111	HANDLE (L)	1	
31-5	VML1656	LOCK RELEASE LEVER (R)	1	
31-6	VKH0110	HANDLE (R)	1	
32	VXU0767	SEARCH DIAL KNOB UNIT	1	
35	VMP1057	RAIL HOLDER ANGLE (L)	1	
36	VMP1056	RAIL HOLDER ANGLE (R)	1	
37	VGU2080	SWITCH KNOB	5	
38	VMZ0655	SWITCH SHEET	4	
39	VMZ1194	SWITCH SHEET	1	
40	VGU3121	HEADPHONE VR KNOB	1	
41	VMP0589	HEADPHONE MOUNT ANGLE	1	
42	EWGG0AP15A14	HEADPHONE VOLUME	1	
43	VMP0587	PANEL HOLDER ANGLE	1	
44	VMP0932	GND ANGLE	1	
45	VYP3531	CONTROL PANEL (2) UNIT	1	
46	VMZ1637	AC SWITCH BARRIER	1	
70	XSB3+5S	SCREW	3	
71	XSB3+6S	SCREW	4	
72	XSB3+8FZS	SCREW	4	
73	XSB3+8S	SCREW	4	
74	XSN3+6S	SCREW	5	
75	XSN3+8S	SCREW	4	
76	XSS3+6FCS	SCREW	7	
78	XSS3+10S	SCREW	4	
79	XTN4+10G	SCREW	28	
80	XTN4+10J	SCREW	8	
81	XTS3+8GFC	SCREW	4	
82	XTV3+8J	SCREW	11	
83	XTV3+10J	SCREW	2	
84	XTV4+15G	SCREW	2	
85	XXEV3W6FPS	HEX SCREW	2	
87	XYN3+C18S	SCREW	2	
88	XNG3ES	NUT	4	
89	XTV4+20G	SCREW	4	
90	XTV3+8G	SCREW	4	

FRONT PANEL ASSEMBLY (AU-63H, AU-62H)

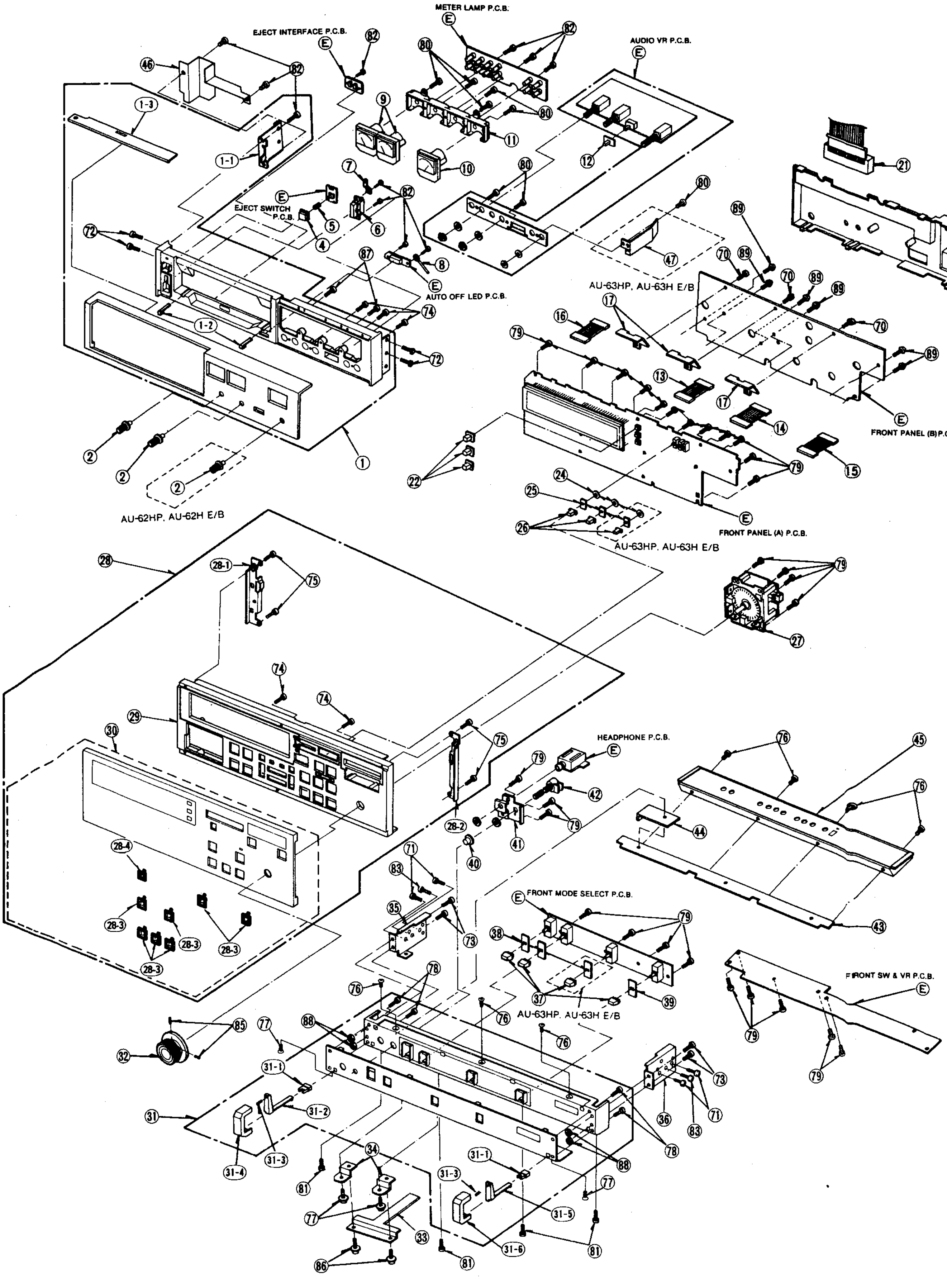
METER LAMP P.C.B.
EJECT INTERFACE P.C.B.
AUDIO VR P.C.B.
EJECT SWITCH P.C.B.
AUTO OFF LED P.C.B.
AU-63HP, AU-63H E/B
FRONT PANEL (B) P.C.B.
FRONT PANEL (A) P.C.B.
AU-63HP, AU-63H E/B
AU-62HP, AU-62H E/B
HEADPHONE P.C.B.
FRONT MODE SELECT P.C.B.
AU-63HP, AU-63H E/B
FRONT SW & VR P.C.B.
E
①
1-1
1-2
1-3
②
④
⑤
⑥
⑦
⑧
⑨
⑩
⑪
⑫
⑬
⑭
⑮
⑯
⑰
⑳
㉑
㉒
㉔
㉕
㉖
㉗
㉘
28-1
28-2
28-3
28-4
㉙
㉚
㉛
31-1
31-2
31-3
31-4
31-5
31-6
㉜
㉝
㉞
㉟
㊱
㊲
㊳
㊴
㊵
㊶
㊷
㊸
㊹
㊺
㊻
㊼
(70)
(71)
(72)
(73)
(74)
(75)
(76)
(77)
(78)
(79)
(80)
(81)
(82)
(83)
(85)
(86)
(87)
(88)
(89)

FRONT PANEL ASSEMBLY (AU-63H, AU-62H)

Ref.No.		Part No.	Part Name & Description	Pcs	Remarks
1		VYP3221	UPPER FRONT PANEL (1) UNIT	1	AU-63H
1		VYP3134	UPPER FRONT PANEL (1) UNIT	1	AU-62H
1-1		VMP1006	GND ANGLE	1	
1-2		VGK1511	CASSETTE GUIDE	2	
1-3		VMP0830	FRONT (U) PROTECTOR ANGLE	1	
2		VXU0768	VR KNOB (S)	3	2pcs: AU-63H
4		VGU3394	EJECT BUTTON	1	
5		VMB1730	EJECT BUTTON SPRING	1	
6		EST15367S	POWER SWITCH	1	AU-63H,AU-62H
7		VMP1008	EJECT SWITCH ANGLE	1	
8		VJR3	CLUMPER	1	
9		VSE0101	AUDIO METER	2	
10		VSE0112	TRACKING METER	1	
11		VGQ1051	METER COVER	1	
12		VGU2085	SWITCH KNOB	1	
13		VEE5375	CONNECTOR CABLE	1	
14		VEE5374	CONNECTOR CABLE	1	
15		VEE5373	CONNECTOR CABLE	1	
16		VEE5376	CONNECTOR CABLE	1	
17		VMP1926	P.C.B. SUPPORT ANGLE (B)	3	
20		VMZ1160	FRONT BOARD CAVER	1	
21		VEC0628	20P FLAT CABLE	1	
22		VGU4359	RESET BUTTON	3	
24		VMX1072	SLIDE SWITCH SPACER	3	
25		VGH0520	SWITCH COVER	3	
26		VGU2089	SLIDE SWITCH KNOB	3	
27		VSR0083	SEARCH DIAL	1	
28		VYP3528	FRONT PANEL (M) 1 UNIT	1	
28-1		VMP0562	PANEL HOLDER ANGLE (L)	1	
28-2		VMP0561	PANEL HOLDER ANGLE (R)	1	
28-3		VGK1595	SWITCH GUARD	7	
28-4		VGK1512	SWITCH GUARD	1	
29		VYP2138	FRONT PANEL (M) 2 UNIT	1	
30		VYP3527	FRONT ALMINUM PANEL UNIT	1	
31		VYP4049	CONTROL PANEL (1) UNIT	1	AU-63H
31		VYP4048	CONTROL PANEL (1) UNIT	1	AU-62H
31-1		VGF0147	HANDLE COVER	2	
31-2		VML1657	LOCK RELEASE LEAVER (L)	1	
31-3		VMB1333	SPRING	2	
31-4		VKH0111	HANDLE (L)	1	
31-5		VML1656	LOCK RELEASE LEVER (R)	1	
31-6		VKH0110	HANDLE (R)	1	
32		VXU0767	SEARCH DIAL KNOB UNIT	1	
35		VMP1057	RAIL HOLDER ANGLE (L)	1	
36		VMP1056	RAIL HOLDER ANGLE (R)	1	
37		VGU2080	SWITCH KNOB	4	3pcs: AU-62H
38		VMZ0655	SWITCH SHEET	3	2pcs: AU-62H
39		VMZ1194	SWITCH SHEET	1	
40		VGU3121	HEADPHONE VR KNOB	1	
41		VMP0589	HEADPHONE MOUNT ANGLE	1	
42		EWGG0AP15A14	HEADPHONE VOLUME	1	
43		VMP0587	PANEL HOLDER ANGLE	1	
44		VMP0932	GND ANGLE	1	
45		VYP3531	CONTROL PANEL (2) UNIT	1	
46		VMZ1637	AC SWITCH BARRIER	1	
47		VMP2910	VR P.C.B. HOLDER ANGLE	1	AU-63H
70		XSB3+5S	SCREW	3	
71		XSB3+6S	SCREW	4	
72		XSB3+8FZS	SCREW	4	
73		XSB3+8S	SCREW	4	
74		XSN3+6S	SCREW	5	
75		XSN3+8S	SCREW	4	
76		XSS3+6FCS	SCREW	7	
78		XSS3+10S	SCREW	4	
79		XTN4+10G	SCREW	28	
80		XTN4+10J	SCREW	8	
81		XTS3+8GFC	SCREW	4	
82		XTV3+8J	SCREW	11	
83		XTV3+10J	SCREW	2	
85		XXEV3W6FPS	HEX SCREW	2	
87		XYN3+C18S	SCREW	2	
88		XNG3ES	NUT	4	
89		XTV4+20G	SCREW	6	

REAR JACK PANEL ASSEMBLY

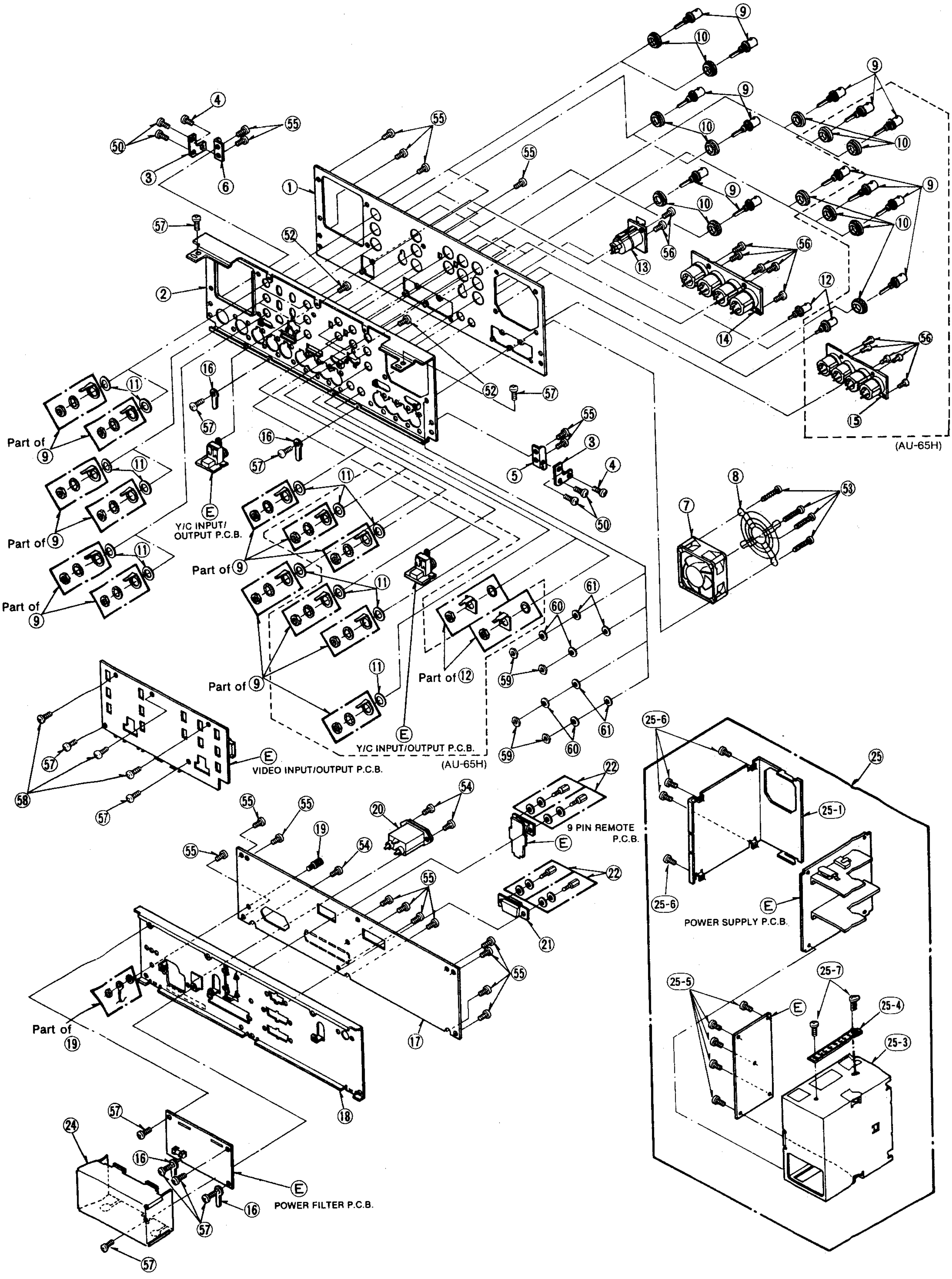

⑨
⑩
④
(55)
(50)
③
⑥
①
(57)
(52)
②
⑬
(56)
⑭
⑫
⑮
(AU-65H)
⑪
⑯
Part of ⑨
E
Y/C INPUT/ OUTPUT P.C.B.
⑤
(50)
⑧
⑦
(53)
(60)
(61)
(59)
Part of ⑫
Y/C INPUT/OUTPUT P.C.B.
(AU-65H)
VIDEO INPUT/OUTPUT P.C.B.
(58)
(54)
⑳
⑲
㉒
9 PIN REMOTE P.C.B.
㉑
⑰
⑱
Part of ⑲
㉕
(25-6)
(25-1)
POWER SUPPLY P.C.B.
(25-5)
(25-7)
(25-4)
(25-3)
㉔
POWER FILTER P.C.B.

REAR JACK PANEL ASSEMBLY

Ref.No.		Part No.	Part Name & Description	Pcs	Remarks
1		VGH3039	JACK NAME PLATE (UPPER)	1	AU-65H
1		VGH3088	JACK NAME PLATE (UPPER)	1	AU-63H,AU-62H
2		VJH0583	JACK PLATE (UPPER)	1	
3		VMP1007	JACK ROTARY PLATE	2	
4		VHD0325	JACK ANGLE SCREW	2	
5		VMP0994	JACK ROTARY ANGLE (L)	1	
6		VMP0960	JACK ROTARY ANGLE (R)	1	
7		VRF0061	FUN MOTOR	1	
8		VGF0409	FUN MOTOR COVER	1	
9		VJS1087	BNC CONNECTOR	13	8pcs: AU-63H,AU-62H
10		VMZ0631	BNC NUT	13	8pcs: AU-63H,AU-62H
11		VMZ0630	WASHER	13	8pcs: AU-63H,AU-62H
12		VJS2525	BNC CONNECTOR	1	
13		VJP1894	XLR CONNECTOR	1	
14		VJP2524	XLR (4PC) CONNECTOR	1	
15		VJS2525	XLR (4PC) CONNECTOR	1	AU-65H
16		VJR3	CLUMPER	4	
17		VGH3045	JACK NAME PLATE (LOWER)	1	
18		VJH0584	JACK PLATE (LOWER)	1	
19		VJH0082	GND TERMINAL	1	
20		VJP0083	AC INLET	1	
21		VEE6377	15P REMOTE CONNECTOR	1	
22		VXQ0102	HEX A BASS	4	
24		VMZ1597	POWER FILTER COVER	1	
25		VYK3004	POWER UNIT	1	NTSC
25		VYK3637	POWER UNIT	1	PAL
25-1		VMP2698	COVER	1	
25-3		VMP2696	FRAME	1	
25-4		VKH0230	HANDLE	1	
25-5		XYNV3+K8S	SCREW	4	
25-6		XTV3+8F	SCREW	4	
25-7		XYN4+F8S	SCREW	2	
50		XYN3+C6S	SCREW	4	
52		XSN3+6FZS	SCREW	2	
53		XSN4+35FCS	SCREW	4	
54		XSB3+8FZS	SCREW	3	
55		XTB3+6FFZ	SCREW	14	
56		XTN26+6FFY	SCREW	12	
57		XTV3+6F	SCREW	10	
58		XYE3+EF8	SCREW	3	
59		XNG4ES	NUT	4	
60		XWA4B	SPRING WASHER	4	
61		XWG4	WASHER	4	

CHASSIS FRAME ASSEMBLY

Ref.No.		Part No.	Part Name & Description	Pcs	Remarks
1		VMP2607	SIDE FRAME (L)	1	
2		VMP0842	TOP MOUNT PLATE (L)	1	
3		VMP0616	CHASSIS FRAME (L)	1	
4		VYQ0013	RAIL UNIT	2	
5		VMP2616	JACK MOUNT ANGLE (BOTTOM)	2	
6		VYQ0252	ROTARY ANGLE (L) UNIT	1	
7		VGQ2025	B BOARD GUIDE RAIL	2	
8		VMP2596	POWER MOUNT ANGLE	1	
9		VMP2612	POWER FRAME	1	
10		VRF0061	FUN MOTOR	1	
11		VGF0335	FUN MOTOR COVER	1	
12		VJF0022	M CLUMPER	11	
13		VMP2610	GUIDE FRAME (M)	1	
14		VMP0618	CHASSIS FRAME (M)	1	
15		VMP2783	TC BOARD STOPPER ANGLE	1	
16		VMP2693	FOOT MOUNT ANGLE	1	
18		VYQ0586	FOOT	4	
20		VMP2614	FRONT FRAME	1	
21		VMP2598	P.C.B. MOUNT ANGLE (B)	1	
22		VMP0617	CHASSIS FRAME (R)	1	
23		VMP3676	CENTER FRAME	1	
24		VXA3967	B P.C.B. SHIELD PLATE	1	
25		VMP2620	W MOTHER P.C.B. ANGLE	2	
26		VJR3	CLUMPER	1	
27		VMX1314W075	FREE BUSHING	1	
28		VGQ2024	W BOARD GUIDE RAIL	2	
29		VMP2611	GUIDE FRAME (S)	1	
30		VHN0011	LATCH	4	
31		VGH3041	SUB FRONT PANEL	1	AU-65H
31		VGH2550	SUB FRONT PANEL	1	AU-63H,AU-62H
32		VYQ0251	ROTARY ANGLE (R) UNIT	1	
33		VMP2739	AT BOARD MOUNT ANGLE (BOTTOM)	1	AU-65H,AU-63H
34		VMP0610	SIDE FRAME (R)	1	
35		VMP2615	FUN MOTOR MOUNT ANGLE	1	
36		VMP2594	TOP MOUNT PLATE (R)	1	
37		VMX1841	P.C.B. CUSHION (W)	1	
38		VMX1558	WASHER	4	
39		VMP0692	GUIDE FRAME MOUNT ANGLE	1	
40		VMP0683	GUIDE FRAME (L2)	1	
41		VMP2609	GUIDE FRAME (L)	1	
42		VMP1525	GUIDE FRAME (L) PROTECTOR ANGLE	1	
43		VMZ1590	CUT SHEET (BIG)	1	
44		VMZ1591	CUT SHEET (SMALL)	1	
45		VMX1314W146	FREE BUSHING	1	
46		VMP2617	W MOTHER P.C.B. ANGLE (F)	1	
47		VMP2618	W MOTHER P.C.B. ANGLE (C)	1	
48		VMP2619	W MOTHER P.C.B. ANGLE (B)	1	
49		VSC2341	SHIELD CASE LID	1	
50		VMP0972	P.C.B. MOUNT ANGLE	1	
51		VMP2600	SWITCH ANGLE	1	
54		VMX1184	FREE BUSHING	1	
60		VMP3668	W BOARD HOLD ANGLE	1	
80		XTV3+6F	SCREW	4	
81		XSB3+6S	SCREW	12	
82		XSN4+35FCS	SCREW	4	
84		XTB3+6F	SCREW	4	
85		XTV3+6F	SCREW	70	
86		XTV3+6FR	SCREW	19	
87		XTV3+10J	SCREW	4	
88		XYN3+C6S	SCREW	4	
89		XYN4+K16S	SCREW	4	
90		XYN4+F6S	SCREW	4	
91		XYNV3+K6FR	SCREW	4	
100		VMP2738	HOLDER ANGLE	1	
101		VSC2299	SHIELD CAVER	1	
102		XTV3+6F	SCREW	2	
103		XTV3+6F	SCREW	1	
110		XTV3+8F	SCREW	1	
111		VSC3486	SHIELD BOX	1	AU-65H

Ref.No.		Part No.	Part Name & Description	Pcs	Remarks

CHASSIS FRAME ASSEMBLY

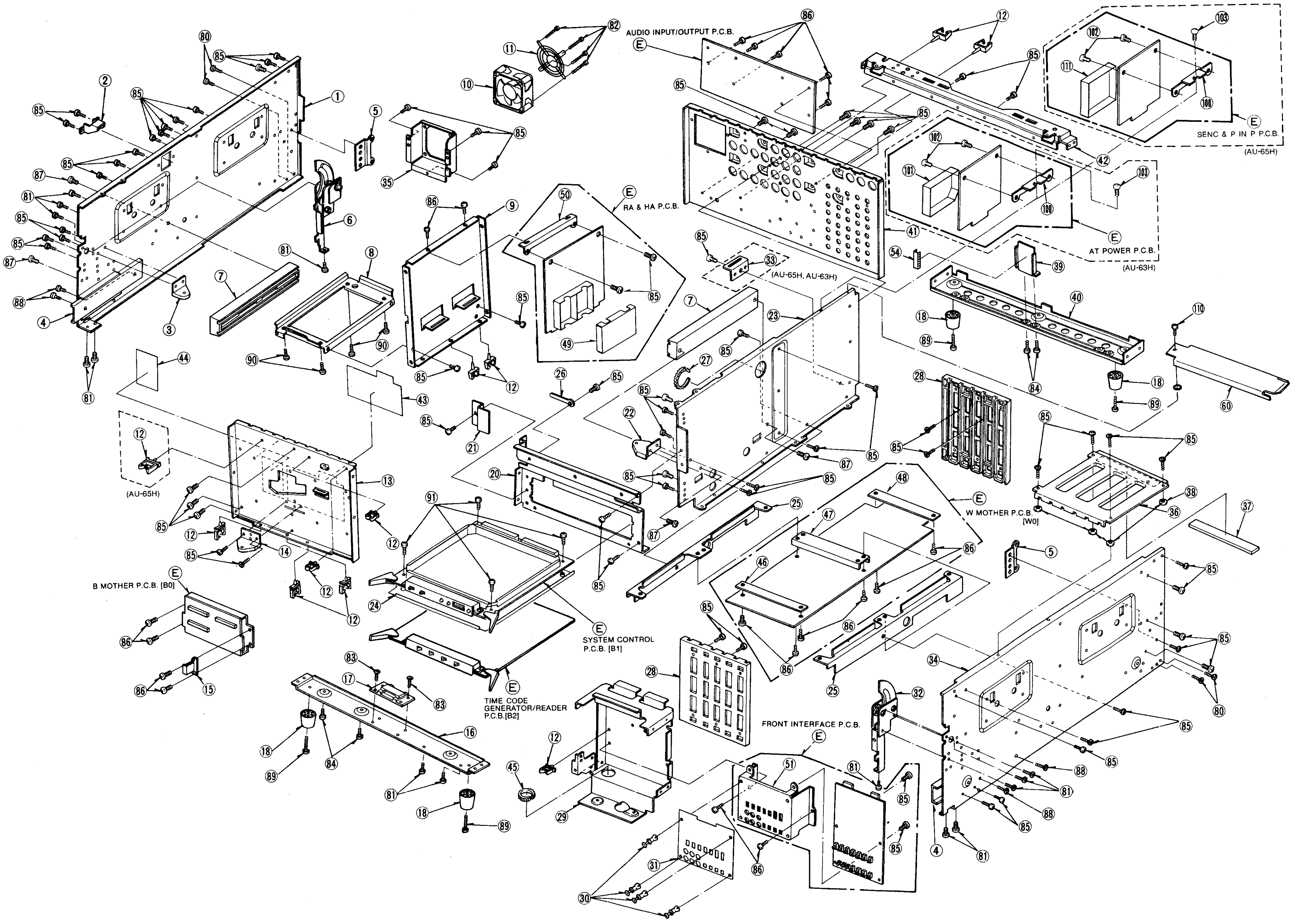

AUDIO INPUT/OUTPUT P.C.B.
E
SENC & P IN P P.C.B.
(AU-65H)
RA & HA P.C.B.
AT POWER P.C.B.
(AU-63H)
(AU-65H, AU-63H)
(AU-65H)
W MOTHER P.C.B.
[W0]
B MOTHER P.C.B. [B0]
SYSTEM CONTROL
P.C.B. [B1]
TIME CODE
GENERATOR/READER
P.C.B.[B2]
FRONT INTERFACE P.C.B.
①
②
③
④
⑤
⑥
⑦
⑧
⑨
⑩
⑪
⑫
⑬
⑭
⑮
⑯
⑰
⑱
⑳
㉑
㉒
㉓
㉔
㉕
㉖
㉗
㉘
㉙
㉚
㉛
㉜
㉝
㉞
㉟
㊱
㊲
㊳
㊴
㊵
㊶
㊷
㊸
㊹
㊺
㊻
㊼
㊽
㊾
㊿
(51)
(54)
(60)
(80)
(81)
(82)
(83)
(84)
(85)
(86)
(87)
(88)
(89)
(90)
(91)
(100)
(101)
(102)
(103)
(110)
(111)

CASSETTE COMPARTMENT ASSEMBLY

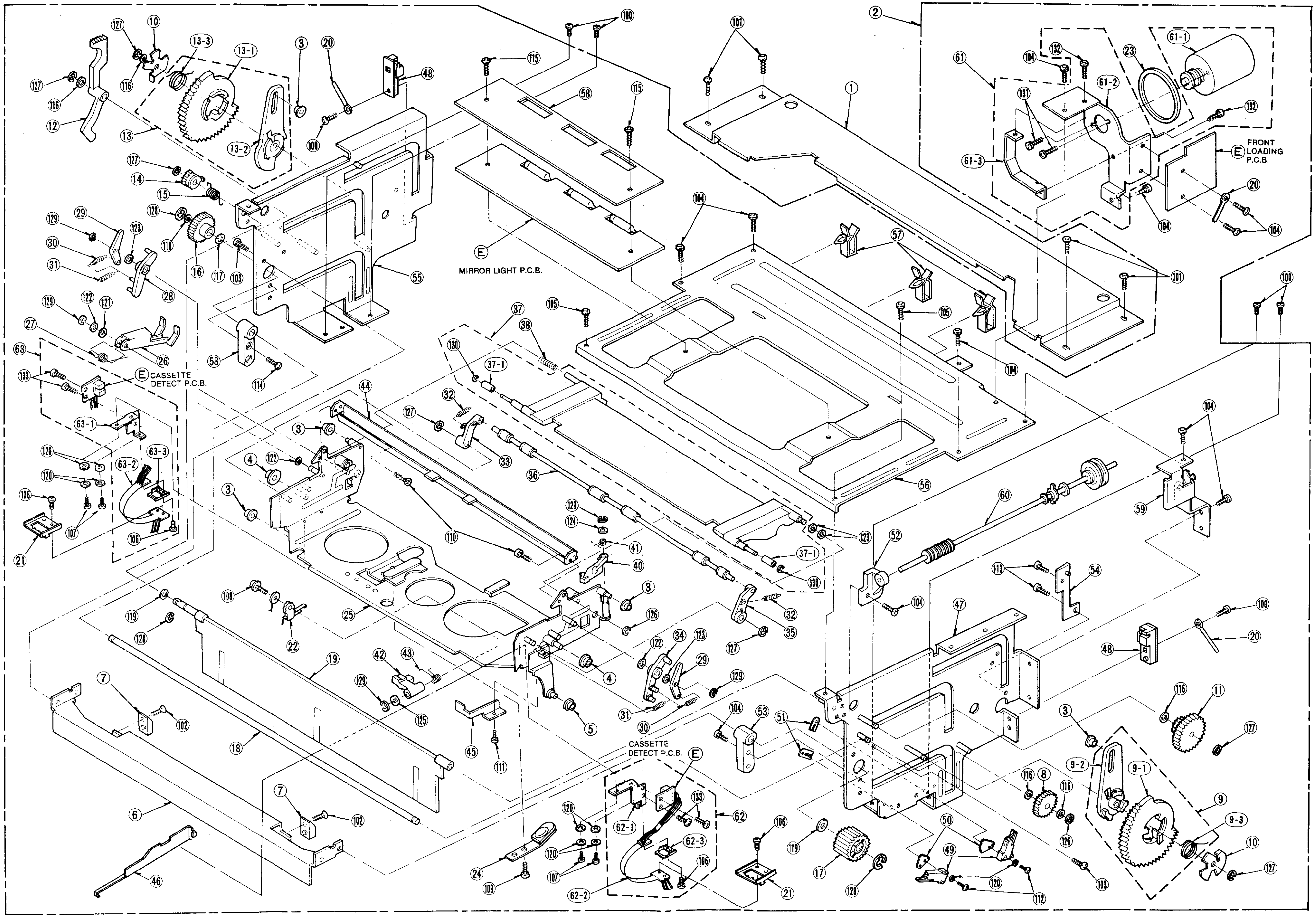
127
10
13-3
13-1
3
20
48
100
115
58
101
1
2
61
104
132
23
61-1
61-2
131
61-3
FRONT LOADING P.C.B.
E
116
12
13
13-2
14
15
128
118
16
117
103
55
129
29
123
30
31
28
122
121
27
26
63
133
CASSETTE DETECT P.C.B.
53
114
E
MIRROR LIGHT P.C.B.
57
105
56
37
38
130
37-1
44
32
33
36
60
59
63-1
63-3
63-2
120
106
107
21
4
122
3
110
124
41
40
52
54
113
47
35
34
126
25
22
119
19
42
43
125
45
111
5
31
30
51
50
49
17
8
9-1
9-2
9
9-3
11
7
102
18
6
46
24
109
62
62-1
62-2
62-3
112

CASSETTE COMPARTMENT ASSEMBLY

Ref.No.		Part No.	Part Name & Description	Pcs	Remarks
1		VMA6661	CARRIAGE MOUNT PLATE	1	
2		VXA3756	FRONT LOADING UNIT	1	
3		VDP1020	GUIDE ROLLER (A)	5	
4		VDP1021	GUIDE ROLLER (B)	2	
5		VDP1022	GUIDE ROLLER (C)	1	
6		VMA6639	FRONT GUIDE ANGLE	1	
7		VMD1048	CASSETTE GUIDE	1	
8		VDG0226	RELAY GEAR	1	
9		VXL1315	WIPER (R) UNIT	1	
9-1		VDG0608	WIPER GEAR (R)	1	
9-2		VML1683	WIPER ARM (R)	1	
9-3		VMB1384	WIPER SPRING (R)	1	
10		VMD0748	WIPER SPRING HOLDER	2	
11		VDG0500	WORM GEAR	1	
12		VML1685	PANEL OPENER	1	
13		VXL1922	WIPER (L) UNIT	1	
13-1		VDG0605	WIPER GEAR (L)	1	
13-2		VML2316	WIPER ARM (L)	1	
13-3		VMB1385	WIPER SPRING (L)	1	
14		VDG0231	PANEL GEAR	1	
15		VMB1386	BLINDER PANEL GEAR	1	
16		VDG0603	MAIN SHAFT GEAR (L)	1	
17		VDG0502	MAIN SHAFT GEAR (R)	1	
18		VMS3845	MAIN SHAFT A	1	
19		VYF0589	BLINDER PANEL	1	
20		VJR3	CLAMPER	3	
21		VMD1383	FLAT CABLE HOLDER (LOWER)	2	
22		VSH0026	LEAF SWITCH	1	
23		VDV0157	LOADING BELT	1	
24		VXL1626	CASSETTE KEEPER UNIT	1	
25		VXA2993	CASSETTE HOLDER	1	
26		VXL2065	CASSETTE OPENER UNIT	1	
27		VMB1547	CASSETTE SPRING	1	
28		VML2151	KICK LEVER (L) UNIT	1	
29		VML1681	KICK DRIVE LEVER	2	
30		VMB1380	KICK DRIVE LEVER SPRING	2	
31		VMB1381	KICK LEVER SPRING	2	
32		VMB1382	PRESS LEVER SPRING	2	
33		VML2149	PRESS LEVER (L)	1	
34		VML2150	KICK LEVER (R) UNIT	1	
35		VML2148	PRESS LEVER (R)	1	
36		VXJ0038	PRESS ROLLER SHAFT UNIT	1	
37		VXA2322	MIRROR UNIT	1	
37-1		VDP1023	MIRROR ROLLER	2	
38		VMB1399	MIRROR SPRING	1	
40		VXL1278	RELEASE LEVER UNIT	1	
41		VMB1383	RELEASE LEVER SPRING	1	
42		VML1845	CASSETTE DETECT LEVER	1	
43		VMB1548	CASSETTE DETECT SPRING	1	
44		VMA7000	PRESS ROLLER SHAFT STOPPER	1	
45		VMA7172	FIXING ANGLE	1	
46		VMD1109	CASSETTE GUIDE (R)	1	
47		VXA2317	RIGHT SIDE PLATE (1) UNIT	1	
48		VEK2414	PHOTO TR UNIT	2	
49		VSM0048	SWITCH	2	
50		VMA6663	SWITCH ADJUSTMENT PLATE	2	
51		VMA6664	SWITCH MOUNT PLATE	2	
52		VMD0747	SHAFT BEARING	1	
53		VMD0746	MAIN SHAFT BEARING	2	
54		VMA6637	RELEASE LEVER HOLDER	1	
55		VXA2319	LEFT SIDE PLATE	1	
56		VMA6643	TOP PLATE	1	
57		VGQ0107	MINI-CLAMPER	3	
58		VMZ0729	MIRROR LIGHT P.C.B. COVER	1	
59		VMA6662	WORM SHAFT MOUNT PLATE	1	
60		VXJ0073	WORM SHAFT (1) UNIT	1	
61		VEM0265	FRONT LOADING MOTOR UNIT	1	
61-1		VEM0228	MOTOR UNIT	1	
61-2		VMA6649	LOADING MOTOR MOUNT ANGLE	1	
61-3		VMA6794	BELT COVER	1	
62		VES0351	CASSETTE DETECT (R) UNIT	1	
62-1		VMA6879	SENSOR ANGLE (R)	1	
62-2		VJB80098	FLAT CABLE (R)	1	
62-3		VMD1382	FLAT CABLE HOLDER (UPPER)	1	
63		VES0352	CASSETTE DETECT (L) UNIT	1	
63-1		VMA6880	SENSOR DETECT (L)	1	
63-2		VJB80099	FLAT CABLE (L)	1	
63-3		VMD1382	FLAT CABLE HOLDER (UPPER)	1	
100		XTV3+8F	SCREW	6	
101		XYN3+F6S	SCREW	4	
102		XTS3+6FFZ	SCREW	2	
103		XYN3+C4S	SCREW	2	
104		XTV3+6F	SCREW	12	
105		XTN3+4F	SCREW	2	
106		XYN2+F5	SCREW	4	
107		XYN2+C4	SCREW	3	
108		XYN2+C6	SCREW	1	
109		XYN26+F4FZ	SCREW	1	
110		XYN26+C4	SCREW	2	
111		XYN2+C3	SCREW	1	
112		XSN2+10	SCREW	2	
113		XSN2+3	SCREW	2	
115		XST3+4RS	SCREW	2	
116		XWGV4D7G	WASHER	5	
117		XWGV5Y9G	WASHER	1	
118		XWGV5F8G	WASHER	1	
119		XWGV5D9G	WASHER	2	
120		XWG2	WASHER	10	
121		XWGV3Z6G	WASHER	1	
122		XWGV3Y6G	WASHER	3	
123		XWGV3D6G	WASHER	4	
124		XWE26	WASHER	1	
125		XWGV3D5G	WASHER	1	
126		XUC25FP	E-RING	2	
127		XUC3FP	E-RING	8	
128		XUC4FP	E-RING	3	
129		XUC2FP	E-RING	5	
130		XUC15FP	E-RING	2	
131		XYN3+C4	SCREW	2	
132		XTV26+5F	SCREW	2	
133		XTV26+4F	SCREW	4	

PACKING

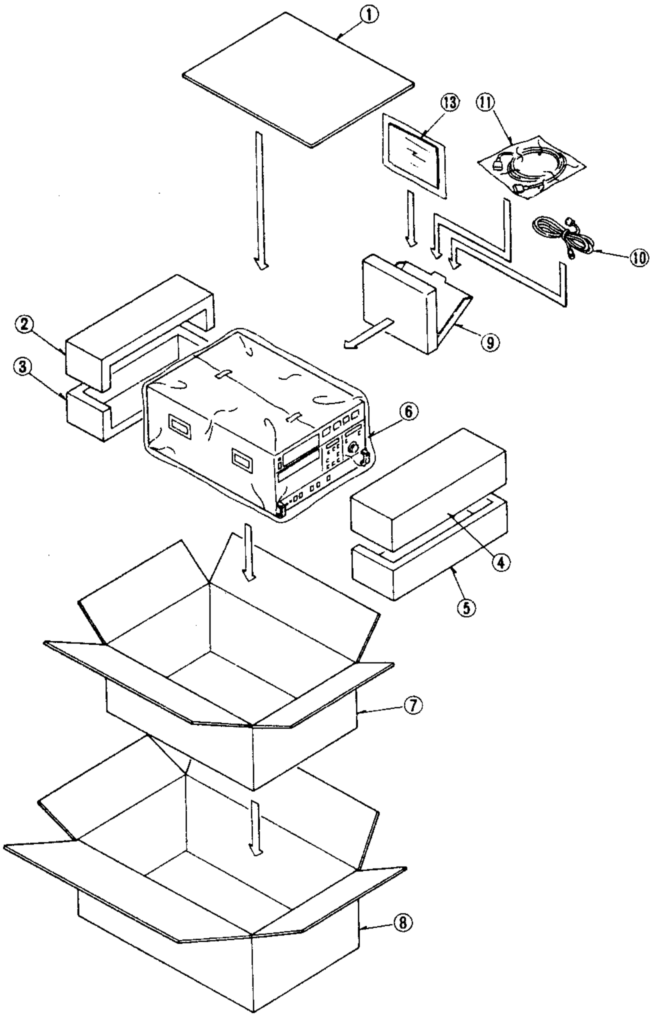

PACKING

Ref.No.		Part No.	Part Name & Description	Pcs	Remarks
1		VPN2698	TOP PAD	1	
2		VPN2665	UPPER REAR CUSHION	1	
3		VPN2697	LOWER REAR CUSHION	1	
4		VPN2664	UPPER FRONT CUSHION	1	
5		VPN2696	LOWER FRONT CUSHION	1	
6		VPF0296	COVER	1	
7		VPG5146	PACKING CASE (IN)	1	
8		VPG5417	PACKING CASE (OUT)	1	
9		VPK1243	ACCESSORIES BOX	1	
10		VJA0173	POWER CODE (E)	1	AU-65HE/63HE/62HE
10		VJA0172	POWER CODE (B)	1	AU-65HB/63HB/62HB
10		VJA0258	POWER CODE (A)	1	AU-65HA/63HA/62HA
11		VJA0716	9P CABLE	1	
13		VQT4633	OPERATING INSTRUCTIONS	1	AU-65HE,AU-65HB
			(ENGLISH)		
13		VQT4655	OPERATING INSTRUCTIONS	1	AU-65HE
			(GERMAN)		
13		VQT4586	OPERATING INSTRUCTIONS	1	AU-65HE
			(FRENCH)		
13		VQT4656	OPERATING INSTRUCTIONS	1	AU-65HE
			(SPANISH)		
13		VQT4641	OPERATING INSTRUCTIONS	1	AU-63HE/B,AU-62HE/B
			(ENGLISH)		
13		VQT4642	OPERATING INSTRUCTIONS	1	AU-63HE,AU-62HE
			(GERMAN)		
13		VQT4587	OPERATING INSTRUCTIONS	1	AU-63HE,AU-62HE
			(FRENCH)		
13		VQT4658	OPERATING INSTRUCTIONS	1	AU-63HE,AU-62HE
			(SPANISH)		

SERVICING FIXTURES & TOOLS LIST

Ref.No.		Part No.	Part Name & Description	Pcs	Remarks
		VFK0293	POST DRIVER	1	
		VFK0357	ECCENTRIC DRIVER (1)	1	
		VFK0358	ECCENTRIC DRIVER (2)	1	
		VFK0359	ECCENTRIC DRIVER (3)	1	
		VFK0446	FINE ADJ. DRIVER	1	
		VFK0363	POST HEIGHT FIXTURE	1	
		VFK66	TENSION GAUGE	1	
		VFK0133	DIAL TORQUE GAUGE	1	
		VFK0134	ADAPTOR FOR VFK0133	1	
		VFK0325	DIAL GAUGE	1	
		VFK0287	HEAD ADJ. PLATE	1	
		VFK0296	RT GAP SPACER	1	
		VFK0326	HEX WRENCH SET	1	
		VFK0343	CHECK LIGHT	1	
		VFK27	HEAD CLEANING STICK	1	
		MOR265	MORLYTON GREASE (BLACK)	1	
		VFK0749	FROIRAL GREASE (WHITE)	1	
		VFK0361	DUMMY PLUG (1)	1	
			LARGE CASSETTE SIMULATION		
		VFK0362	DUMMY PLUG (2)	1	
			SMALL CASSETTE SIMULATION		
		VFK0352	MECH NEUTRAL ADJ. PLATE	1	
		VFK0335	RETAINING REMOVER	1	
		VFK0473	PHILIPS DRIVER (MAGNET)	1	
		VFK0337	PHILIPS DRIVER (LARGE)	1	
		VFK0366	PHILIPS DRIVER (SMALL)	1	
		VFK0367	SCREW DRIVER	1	
		VFK0338	TRIMMER ADJ. DRIVER	1	
		VFK0368	CORE ADJ. DRIVER	1	
		VFK0369	TWEEZERS	1	
		VFK0370	NUT DRIVER (5.5m/m)	1	
		VFK0371	RADIO PRIER	1	
		VFK0372	CUTTER PRIER	1	
		VFK0355A	TOOL BOX CASE	1	
		VFK0438	P2 POST ADJ. FIXTURE	1	
		VFK0470	EXTENSION CABLE SET	1	
		VFM7089EAG	ALIGNMENT TAPE (NTSC)	1	(LARGE SIZE)
		VFM7189EG	ALIGNMENT TAPE (PAL)	1	(LARGE SIZE)
		VFK0132	BACK TENSION METER	1	
		VFK0600	W EXTENDER	1	
		VFK0601	B EXTENDER	1	
		VFK0676	NUT DRIVER (7m/m)	1	

38E
9
39✓
33

Order No. VSD9804S501

Technical Bulletin

Supplement to the Service Manual

MII Video Product

Subject : Correction in Part Number List

Please use this supplement together with the Service Manual as follows :

Model No.	Bulletin No.	Order No.	Effective from
AU-65E	160	VQS0264	First Production
AU-665E	138	VQS0270	First Production
AU-65HE	96	VSD9204M501	First Production
AU-66HE	70	VSD9208M502	First Production

FRONT PANEL ASSEMBLY

Interchangeability Code (I/C)

A	Original or new parts may be used in early or late production set. Use original parts until exhausted, then stock new parts.
B	Original parts may be used in early production sets only. New parts may be used in early or late production sets. Use original parts possible then stock new parts.
C	New parts only may be used in early or late production sets.
D	Original parts may be used in early or late production sets only. New parts may be used in late production sets only. Stock both original and new parts.
E	Others

Part Number

Ref. No.	Original Part No.	New Part No.	Part Name & Descriptions	Pcs	I/C	Remarks
28-2	VGU4116	VGU4115	EDIT SET BUTTON	1		
28-2	VGU4115	VGU4116	GO-TO BUTTON	1		

TZZ-0070

Panasonic

© 1998 Matsushita Electric Industrial Co., Ltd. All rights reserved.
Unauthorized copying and distribution is a violation of law.

MODULES

• Block Diagrams
• Schematic Diagrams
• Printed Circuit Boards

This section provides the block diagrams, schematic diagrams and printed circuit boards.

Note:

1. Do not use the part numbers shown on the schematic diagram or P.C.Board layout for ordering.
   The correct part number for ordering is shown in the Exploded View/Parts List section.
2. Unless otherwise specified, all resistors are in OHMS, K = 1,000 OHMS, all capacitors are in MICROFARADS (uF), P = uuF.
3. The foil paterns on the P.C.Board layout, printed with the blue color is the component side.
4. Please refer to the Electrical Parts List for the value and existance of component parts on the P.C.Board.

CONTENTS

BLOCK DIAGRAM

OVER ALL BLOCK DIAGRAM (FOR AU-665 NTSC) 5-1-1
OVER ALL BLOCK DIAGRAM(FOR AU-65) .. 5-1-2
OVER ALL BLOCK DIAGRAM(FOR AU-63) .. 5-1-3
OVER ALL BLOCK DIAGRAM(FOR AU-62) .. 5-1-4
W1 (TBC & SYNC GEN) BLOCK DIAGRAM 1/3 (FOR AU-65, AU-63, AU-62) 5-1-5
W1 (TBC & SYNC GEN) BLOCK DIAGRAM 2/3 (FOR AU-65, AU-63, AU-62) 5-1-6
W1 (TBC & SYNC GEN) BLOCK DIAGRAM 3/3 (FOR AU-65, AU-63, AU-62) 5-1-7
W1 (TBC & SYNC GEN) BLOCK DIAGRAM 1/3 (FOR AU-665 NTSC) 5-1-8
W1 (TBC & SYNC GEN) BLOCK DIAGRAM 2/3 (FOR AU-665 NTSC) 5-1-9
W1 (TBC & SYNC GEN) BLOCK DIAGRAM 3/3 (FOR AU-665 NTSC) 5-1-10
W2 SUB (9 BIT A/D) BLOCK DIAGRAM (FOR AU-665) 5-1-11
W2 (ENCODER) BLOCK DIAGRAM 1/3 5-1-11
W2 (ENCODER) BLOCK DIAGRAM 2/3 5-1-12
W2 (ENCODER) BLOCK DIAGRAM 3/3 5-1-13
W3 (MOD & DEMOD) BLOCK DIAGRAM 1/3 .. 5-1-14
W3 (MOD & DEMOD) BLOCK DIAGRAM 2/3 .. 5-1-15
W3 (MOD & DEMOD) BLOCK DIAGRAM 3/3 .. 5-1-16
W4 (DEC & CTCM) BLOCK DIAGRAM 1/4 (FOR AU-65, AU-665 NTSC) 5-1-17
W4 (DEC & CTCM) BLOCK DIAGRAM 2/4 (FOR AU-65, AU-665 NTSC) 5-1-18
W4 (DEC & CTCM) BLOCK DIAGRAM 3/4 (FOR AU-65, AU-665 NTSC) 5-1-19
W4 (DEC & CTCM) BLOCK DIAGRAM 4/4 (FOR AU-65, AU-665 NTSC) 5-1-20
W5 (SERVO) BLOCK DIAGRAM 1/6 5-1-21
W5 (SERVO) BLOCK DIAGRAM 2/6 5-1-22
W5 (SERVO) BLOCK DIAGRAM 3/6 5-1-23
W5 (SERVO) BLOCK DIAGRAM 4/6 5-1-24
W5 (SERVO) BLOCK DIAGRAM 5/6 5-1-25
W5 (SERVO) BLOCK DIAGRAM 6/6 (FOR AU-665, AU-63) 5-1-26
W6 (AUDIO) BLOCK DIAGRAM 1/4 5-1-27
W6 (AUDIO) BLOCK DIAGRAM 2/4 5-1-28
W6 (AUDIO) BLOCK DIAGRAM 3/4 (FOR AU-760) 5-1-28
W6 (AUDIO) BLOCK DIAGRAM 4/4 5-1-29
B1 (SYSTEM CONTROL) BLOCK DIAGRAM 1/3 5-1-30
B1 (SYSTEM CONTROL) BLOCK DIAGRAM 2/3 5-1-31
B1 (SYSTEM CONTROL) BLOCK DIAGRAM 3/3 5-1-32
B2 (TC & BB) BLOCK DIAGRAM 1/2 (FOR AU-665) 5-1-33
B2 (TC & BB) BLOCK DIAGRAM 2/2 (FOR AU-665) 5-1-34
AT POWER BLOCK DIAGRAM (FOR AU-665, AU-63) 5-1-35
AUDIO I/O BLOCK DIAGRAM 5-1-35
AUDIO VR BLOCK DIAGRAM (FOR AU-665).. 5-1-36
AUDIO VR BLOCK DIAGRAM (FOR AU-65, AU-63, AU-62) 5-1-36
FRONT PANEL A,B,C BLOCK DIAGRAM (FOR AU-665) 5-1-37
FRONT PANEL A,B,C BLOCK DIAGRAM (FOR AU-65) 5-1-38
FRONT PANEL A,C BLOCK DIAGRAM (FOR AU-63, AU-62) 5-1-39
FRONT SW & VR BLOCK DIAGRAM (FOR AU-665) 5-1-40
RA & HA BLOCK DIAGRAM............... 5-1-41
VIDEO I/O BLOCK DIAGRAM 1/2 (FOR AU-665) 5-1-42
VIDEO I/O BLOCK DIAGRAM 2/2 (FOR AU-665) 5-1-43
VIDEO I/O BLOCK DIAGRAM 1/2 (FOR AU-65, AU-63, AU-62) 5-1-44
VIDEO I/O BLOCK DIAGRAM 2/2 (FOR AU-65, AU-63, AU-62) 5-1-44

SCHEMATIC DIAGRAM

CN NO. INFORMATION...................... 5-2-1
INTERCONNECTION 1/3 5-2-2
INTERCONNECTION 2/3 5-2-3
INTERCONNECTION 3/3 5-2-3
W0 (W, MOTHER) SCHEMATIC DIAGRAM 1/4 5-2-4
W0 (W, MOTHER) SCHEMATIC DIAGRAM 2/4 5-2-4
W0 (W, MOTHER) SCHEMATIC DIAGRAM 3/4 5-2-5
W0 (W, MOTHER) SCHEMATIC DIAGRAM 4/4 5-2-5
W1 (TBC & SYNC GEN) SCHEMATIC DIAGRAM 1/6 (FOR AU-65,AU-63,AU-62)..... 5-2-6
W1 (TBC & SYNC GEN) SCHEMATIC DIAGRAM 2/6 (FOR AU-65,AU-63,AU-62)..... 5-2-6
W1 (TBC & SYNC GEN) SCHEMATIC DIAGRAM 3/6 (FOR AU-65,AU-63,AU-62)..... 5-2-7
W1 (TBC & SYNC GEN) SCHEMATIC DIAGRAM 4/6 (FOR AU-65,AU-63,AU-62)..... 5-2-7

W1 (TBC & SYNC GEN) SCHEMATIC DIAGRAM 5/6 (FOR AU-65, AU-63, AU-62) 5-2-8
W1 (TBC & SYNC GEN) SCHEMATIC DIAGRAM 6/6 (FOR AU-65, AU-63, AU-62) 5-2-8
W1 SUB SCHEMATIC DIAGRAM (FOR AU-665 NTSC) 5-2-9
W1 (TBC & SYNC GEN) SCHEMATIC DIAGRAM 1/6 (FOR AU-665 NTSC) 5-2-9
W1 (TBC & SYNC GEN) SCHEMATIC DIAGRAM 2/6 (FOR AU-665 NTSC) 5-2-10
W1 (TBC & SYNC GEN) SCHEMATIC DIAGRAM 3/6 (FOR AU-665 NTSC) 5-2-10
W1 (TBC & SYNC GEN) SCHEMATIC DIAGRAM 4/6 (FOR AU-665 NTSC) 5-2-11
W1 (TBC & SYNC GEN) SCHEMATIC DIAGRAM 5/6 (FOR AU-665 NTSC) 5-2-11
W1 (TBC & SYNC GEN) SCHEMATIC DIAGRAM 6/6 (FOR AU-665 NTSC) 5-2-12
W2 SUB (9BIT A/D) SCHEMATIC DIAGRAM (FOR AU-665) 5-2-13
W2 (ENCODER) SCHEMATIC DIAGRAM 1/4 . 5-2-13
W2 (ENCODER) SCHEMATIC DIAGRAM 2/4 . 5-2-13
W2 (ENCODER) SCHEMAUIC DIAGRAM 3/4 . 5-2-14
W2 (ENCODER) SCHEMATIC DIAGRAM 4/4 (FOR AU-665) 5-2-14
W3 (MOD & DEMOD) SCHEMATIC DIAGRAM 1/5 5-2-15
W3 (MOD & DEMOD) SCHEMATIC DIAGRAM 2/5 5-2-15
W3 (MOD & DEMOD) SCHEMATIC DIAGRAM 3/5 5-2-16
W3 (MOD & DEMOD) SCHEMATIC DIAGRAM 4/5 5-2-16
W3 (MOD & DEMOD) SCHEMATIC DIAGRAM 5/5 5-2-16
W4 (DECODER & CTCM) SCHEMATIC DIAGRAM 1/4 (FOR AU-665 NTSC, AU-65) ... 5-2-17
W4 (DECODER & CTCM) SCHEMATIC DIAGRAM 2/4 (FOR AU-665 NTSC, AU-65) ... 5-2-17
W4 (DECODER & CTCM) SCHEMATIC DIAGRAM 3/4 (FOR AU-665 NTSC, AU-65) ... 5-2-18
W4 (DECODER & CTCM) SCHEMATIC DIAGRAM 4/4 (FOR AU-665 NTSC, AU-65) ... 5-2-18
W5 (SERVO) BLOCK DIAGRAM 1/8 (DRUM SERVO) 5-2-19
W5 (SERVO) BLOCK DIAGRAM 2/8 (HSW, S/P) 5-2-19
W5 (SERVO) BLOCK DIAGRAM 3/8 (CAPSTAN SERVO) 5-2-20
W5 (SERVO) BLOCK DIAGRAM 4/8 (I/O CTL CMP) 5-2-20
W5 (SERVO) BLOCK DIAGRAM 5/8 (REEL SERVO) 5-2-21
W5 (SERVO) BLOCK DIAGRAM 6/8 (SERVO DRIVE) 5-2-21
W5 (SERVO) BLOCK DIAGRAM 7/8 (AUTO TRACKING 1)(FOR AU-665, AU-63) ... 5-2-22
W5 (SERVO) BLOCK DIAGRAM 8/8 (AUTO TRACKING 2)(FOR AU-665, AU-63) ... 5-2-22
W6 (AUDIO) SCHEMATIC DIAGRAM 1/5 (LINEAR AUDIO) 5-2-23
W6 (AUDIO) SCHEMATIC DIAGRAM 2/5 (REC, TC) 5-2-23
W6 (AUDIO) SCHEMATIC DIAGRAM 3/5 (CONFI) 5-2-24
W6 (AUDIO) SCHEMATIC DIAGRAM 4/5 (EXT NR) (FOR AU-665 PAL) 5-2-24
W6 (AUDIO) SCHEMATIC DIAGRAM 5/5 (FM AUDIO) 5-2-25
B0 (B, MOTHER) SCHEMATIC DIAGRAM 1/2 .. 5-2-26
B0 (B, MOTHER) SCHEMATIC DIAGRAM 2/2 .. 5-2-27
B1 (SYSTEM CONTROL) SCHEMATIC DIAGRAM 1/6 5-2-28
B1 (SYSTEM CONTROL) SCHEMATIC DIAGRAM 2/6 5-2-29
B1 (SYSTEM CONTROL) SCHEMATIC DIAGRAM 3/6 5-2-29
B1 (SYSTEM CONTROL) SCHEMATIC DIAGRAM 4/6 5-2-30
B1 (SYSTEM CONTROL) SCHEMATIC DIAGRAM 5/6 5-2-30
B1 (SYSTEM CONTROL) SCHEMATIC DIAGRAM 6/6 5-2-31
B2 (TCG/TCR) SCHEMATIC DIAGRAM 1/2 (FOR AU-665) 5-2-32
B2 (TCG/TCR) SCHEMATIC DIAGRAM 2/2 (FOR AU-665) 5-2-33
B2 (TCG/TCR) SCHEMATIC DIAGRAM (FOR AU-665) 5-2-33
A. T H. A SCHEMATIC DIAGRAM (FOR AU-665) 5-2-34
AT POWER SCHEMATIC DIAGRAM (FOR AU-665, AU-63) 5-2-34
AUDIO I/O SCHEMATIC DIAGRAM 1/2..... 5-2-35
AUDIO I/O SCHEMATIC DIAGRAM 2/2 5-2-35
AUDIO I/O (SUB) SCHEMATIC DIAGRAM... 5-2-35
AUDIO INPUT SW SCHEMATIC DIAGRAM (FOR AU-665) 5-2-36
AUDIO VR SCHEMATIC DIAGRAM (FOR AU-665) 5-2-36
AUDIO VR SCHEMATIC DIAGRAM (FOR AU-65, AU-63, AU-62) 5-2-36

FRONT INTERFACE SCHEMATIC DIAGRAM (FOR AU-665) 5-2-37
FRONT INTERFACE SCHEMATIC DIAGRAM (FOR AU-65, AU-63, AU-62) 5-2-37
FRONT MODE SELECT SCHEMATIC DIAGRAM 5-2-38
FRONT PANEL A SCHEMATIC DIAGRAM (FOR AU-665 NTSC) 5-2-38
FRONT PANEL A SCHEMATIC DIAGRAM (FOR AU-65) 5-2-39
FRONT PANEL A SCHEMATIC DIAGRAM (FOR AU-63, AU-62) 5-2-39
FRONT PANEL B SCHEMATIC DIAGRAM (FOR AU-665, AU-65) 5-2-40
FRONT PANEL C SCHEMATIC DIAGRAM (FOR AU-665) 5-2-40
FRONT PANEL C SCHEMATIC DIAGRAM (FOR AU-65) 5-2-41
FRONT PANEL C SCHEMATIC DIAGRAM (FOR AU-63, AU-62) 5-2-42
FRONT SW & VR SCHEMATIC DIAGRAM (FOR AU-665) 5-2-43
FRONT SW & VR SCHEMATIC DIAGRAM (FOR AU-65, AU-63, AU-62) 5-2-43
MECHA INTERFACE SCHEMATIC DIAGRAM5-2-44
POWER FILTER SCHEMATIC DIAGRAM... 5-2-44
POWER SCHEMATIC DIAGRAM 5-2-45
RA/HA SCHEMATIC DIAGRAM 5-2-46
VIDEO I/O SCHEMATIC DIAGRAM (FOR AU-665) 5-2-47
VIDEO I/O SCHEMATIC DIAGRAM (FOR AU-65, AU-63, AU-62) 5-2-47
VIDEO VR SCHEMATIC DIAGRAM (FOR AU-665) 5-2-48
50P REMOTE SCHEMATIC DIAGRAM (FOR AU-665) 5-2-48
9P REMOTE SCHEMATIC DIAGRAM 5-2-48
Y/C IN/OUT SCHEMATIC DIAGRAM 5-2-48

P.C.BOARD

W0 (MOTHER 1) P.C.BOARD 5-3-1
W1 (TBC & SYNC GEN) P.C.BOARD (FOR AU-65, AU-63, AU-62) 5-3-2
W1 (TBC & SYNC GEN) P.C.BOARD (FOR AU-665) 5-3-5
W1 SUB P.C.BOARD 5-3-5
W2 SUB (9BIT A/D) P.C.BOARD 5-3-6
W2 SUB (SC) P.C.BOARD 5-3-6
W2 (ENCODER) P.C.BOARD 5-3-6
W3 (MOD & DEMOD) P.C.BOARD 5-3-9
W3 SUB P.C.BOARD 5-3-9
W3 SUB (Y DO BLK) P.C.BOARD 5-3-9
W3 SUB (C DO BLK) P.C.BOARD 5-3-9
W4 (DECODER & CTCM) P.C.BOARD 5-3-10
W5 (SERVO) P.C.BOARD 5-3-13
W6 SUB (TC TRAP) P.C.BOARD 5-3-14
W6 SUB (SPOT ERASE) P.C.BOARD 5-3-14
W6 (AUDIO) P.C.BOARD 5-3-15
B0 (MOTHER 2) P.C.BOARD 5-3-16
B1 (SYSTEM CONTROL) P.C.BOARD 5-3-16
B2 (TC & BB) P.C.BOARD 5-3-17
AT H.A P.C.BOARD 5-3-18
AT POWER P.C.BOARD 5-3-18
AUDIO I/O P.C.BOARD 5-3-18
AUDIO I/O SUB P.C.BOARD 5-3-18
AUDIO VR P.C.BOARD (FOR AU-665) 5-3-19
AUDIO VR P.C.BOARD (FOR AU-65, AU-63, AU-62) 5-3-19
AUDIO INPUT SW P.C.BOARD 5-3-19
AUTO OFF LED P.C.BOARD 5-3-19
CASSETTE CARRIAGE LAMP P.C.BOARD.. 5-3-19
CASSETTE DETECT P.C.BOARD 5-3-19
EJECT INTER P.C.BOARD 5-3-19
EJECT SW P.C.BOARD 5-3-19
FRONT MODE SELECT CIRCUIT P.C.BOARD 5-3-19
FRONT INTERFACE P.C.BOARD (FOR AU-665) 5-3-20
FRONT INTERFACE P.C.BOARD (FOR AU-65, AU-63, AU-62) 5-3-20
FRONT PANEL A P.C.BOARD (FOR AU-665) 5-3-21
FRONT PANEL A P.C.BOARD (FOR AU-65) 5-3-21
FRONT PANEL A P.C.BOARD (FOR AU-63, AU-62) 5-3-22
FRONT PANEL C P.C.BOARD (FOR AU-63, AU-62) 5-3-22
FRONT PANEL B P.C.BOARD (FOR AU-665, AU-65) 5-3-23
FRONT PANEL C P.C.BOARD (FOR AU-665) 5-3-23
FRONT PANEL C P.C.BOARD (FOR AU-65) 5-3-23
FRONT SW VR P.C.BOARD (FOR AU-665) 5-3-24
FRONT SW VR P.C.BOARD (FOR AU-65, AU-63, AU-62) 5-3-24
FRONT LOADING P.C.BOARD 5-3-24
HEADPHONE VR P.C.BOARD (FOR NTSC) . 5-3-24
HEADPHONE VR P.C.BOARD (FOR PAL) ... 5-3-24
LOADING PHOTO P.C.BOARD 5-3-24
MECHA INTERFACE P.C.BOARD 5-3-24

FRONT INTERFACE SCHEMATIC DIAGRAM (FOR AU-665) 5-2-37
FRONT INTERFACE SCHEMATIC DIAGRAM (FOR AU-65, AU-63, AU-62) 5-2-37
FRONT MODE SELECT SCHEMATIC DIAGRAM 5-2-38
FRONT PANEL A SCHEMATIC DIAGRAM (FOR AU-665 NTSC) 5-2-38
FRONT PANEL A SCHEMATIC DIAGRAM (FOR AU-65) 5-2-39
FRONT PANEL A SCHEMATIC DIAGRAM (FOR AU-63, AU-62) 5-2-39
FRONT PANEL B SCHEMATIC DIAGRAM (FOR AU-665, AU-65) 5-2-40
FRONT PANEL C SCHEMATIC DIAGRAM (FOR AU-665) 5-2-40
FRONT PANEL C SCHEMATIC DIAGRAM (FOR AU-65) 5-2-41
FRONT PANEL C SCHEMATIC DIAGRAM (FOR AU-63, AU-62) 5-2-42
FRONT SW & VR SCHEMATIC DIAGRAM (FOR AU-665) 5-2-43
FRONT SW & VR SCHEMATIC DIAGRAM (FOR AU-65, AU-63, AU-62) 5-2-43
MECHA INTERFACE SCHEMATIC DIAGRAM5-2-44
POWER FILTER SCHEMATIC DIAGRAM... 5-2-44
POWER SCHEMATIC DIAGRAM........... 5-2-45
RA/HA SCHEMATIC DIAGRAM............ 5-2-46
VIDEO I/O SCHEMATIC DIAGRAM (FOR AU-665) 5-2-47
VIDEO I/O SCHEMATIC DIAGRAM (FOR AU-65, AU-63, AU-62).................. 5-2-47
VIDEO VR SCHEMATIC DIAGRAM (FOR AU-665) 5-2-48
50P REMOTE SCHEMATIC DIAGRAM (FOR AU-665) 5-2-48
9P REMOTE SCHEMATIC DIAGRAM....... 5-2-48
Y/C IN/OUT SCHEMATIC DIAGRAM....... 5-2-48

P.C.BOARD

W0 (MOTHER 1) P.C.BOARD................. 5-3-1
W1 (TBC & SYNC GEN) P.C.BOARD (FOR AU-65, AU-63, AU-62) 5-3-2
W1 (TBC & SYNC GEN) P.C.BOARD (FOR AU-665) 5-3-5
W1 SUB P.C.BOARD....................... 5-3-5
W2 SUB (9BIT A/D) P.C.BOARD............ 5-3-6
W2 SUB (SC) P.C.BOARD................... 5-3-6
W2 (ENCODER) P.C.BOARD 5-3-6
W3 (MOD & DEMOD) P.C.BOARD............ 5-3-9
W3 SUB P.C.BOARD....................... 5-3-9
W3 SUB (Y DO BLK) P.C.BOARD........... 5-3-9
W3 SUB (C DO BLK) P.C.BOARD........... 5-3-9
W4 (DECODER & CTCM) P.C.BOARD........ 5-3-10
W5 (SERVO) P.C.BOARD 5-3-13
W6 SUB (TC TRAP) P.C.BOARD 5-3-14
W6 SUB (SPOT ERASE) P.C.BOARD........ 5-3-14
W6 (AUDIO) P.C.BOARD 5-3-15
B0 (MOTHER 2) P.C.BOARD 5-3-16
B1 (SYSTEM CONTROL) P.C.BOARD........ 5-3-16
B2 (TC & BB) P.C.BOARD 5-3-17
AT H.A P.C.BOARD......................... 5-3-18
AT POWER P.C.BOARD 5-3-18
AUDIO I/O P.C.BOARD...................... 5-3-18
AUDIO I/O SUB P.C.BOARD................ 5-3-18
AUDIO VR P.C.BOARD (FOR AU-665) 5-3-19
AUDIO VR P.C.BOARD (FOR AU-65, AU-63, AU-62) 5-3-19
AUDIO INPUT SW P.C.BOARD.............. 5-3-19
AUTO OFF LED P.C.BOARD 5-3-19
CASSETTE CARRIAGE LAMP P.C.BOARD.. 5-3-19
CASSETTE DETECT P.C.BOARD........... 5-3-19
EJECT INTER P.C.BOARD.................. 5-3-19
EJECT SW P.C.BOARD...................... 5-3-19
FRONT MODE SELECT CIRCUIT P.C.BOARD................................ 5-3-19
FRONT INTERFACE P.C.BOARD (FOR AU-665) 5-3-20
FRONT INTERFACE P.C.BOARD (FOR AU-65, AU-63, AU-62) 5-3-20
FRONT PANEL A P.C.BOARD (FOR AU-665)............................... 5-3-21
FRONT PANEL A P.C.BOARD (FOR AU-65) 5-3-21
FRONT PANEL A P.C.BOARD (FOR AU-63, AU-62) 5-3-22
FRONT PANEL C P.C.BOARD (FOR AU-63, AU-62) 5-3-22
FRONT PANEL B P.C.BOARD (FOR AU-665, AU-65) 5-3-23
FRONT PANEL C P.C.BOARD (FOR AU-665)............................... 5-3-23
FRONT PANEL C P.C.BOARD (FOR AU-65)................................ 5-3-23
FRONT SW VR P.C.BOARD (FOR AU-665)............................... 5-3-24
FRONT SW VR P.C.BOARD (FOR AU-65, AU-63, AU-62) 5-3-24
FRONT LOADING P.C.BOARD 5-3-24
HEADPHONE VR P.C.BOARD (FOR NTSC) . 5-3-24
HEADPHONE VR P.C.BOARD (FOR PAL) ... 5-3-24
LOADING PHOTO P.C.BOARD 5-3-24
MECHA INTERFACE P.C.BOARD 5-3-24

METER LAMP P.C.BOARD 5-3-24
POWER SUPPLY A P.C.BOARD 5-3-25
POWER SUPPLY B P.C.BOARD 5-3-25
POWER FILTER P.C.BOARD (FOR NTSC) .. 5-3-25
POWER FILTER P.C.BOARD (FOR PAL) 5-3-25
RA, HA P.C.BOARD 5-3-25
TR SENSOR(1) P.C.BOARD.................. 5-3-26
TR SENSOR(2) P.C.BOARD.................. 5-3-26
UNLOADING PHOTO P.C.BOARD........... 5-3-26
VIDEO I/O P.C.BOARD (FOR AU-665) 5-3-26
VIDEO I/O P.C.BOARD
(FOR AU-65, AU-63, AU-62)................... 5-3-26
VIDEO VR P.C.BOARD...................... 5-3-26
VIDEO CH4 P.C.BOARD..................... 5-3-26
Y/C IN/OUT P.C.BOARD.................... 5-3-26
50P REMOTE P.C.BOARD................... 5-3-26
9P REMOTE P.C.BOARD.................... 5-3-26
W1 (TBC & SYNC GEN) WAVEFORMS
FOR NTSC................................. 5-3-27
W2 (ENCODER) WAVEFORMS
FOR NTSC................................. 5-3-27
W3 (MOD & DEMOD) WAVEFORMS
FOR NTSC................................. 5-3-27
W4 (DECODER & CTCM) WAVEFORMS
FOR NTSC................................. 5-3-28
W5 (SERVO) WAVEFORMS FOR NTSC 5-3-28
W6 (AUDIO) WAVEFORMS FOR NTSC 5-3-28
B2 (TC & BB) WAVEFORMS FOR NTSC.... 5-3-29
RA & HA WAVEFORMS FOR NTSC........ 5-3-29
AT POWER WAVEFORMS FOR NTSC...... 5-3-29
W1 (TBC & SYNC GEN) WAVEFORMS
FOR PAL 5-3-29
W2 (ENCODER) WAVEFORMS
FOR PAL 5-3-30
W3 (MOD & DEMOD) WAVEFORMS
FOR PAL 5-3-30
W4 (DECODER & CTCM) WAVEFORMS
FOR PAL 5-3-30
W5 (SERVO) WAVEFORMS FOR PAL....... 5-3-31
W6 (AUDIO) WAVEFORMS FOR PAL........ 5-3-31
B2 (TC & BB) WAVEFORMS
FOR PAL 5-3-32
RA & HA WAVEFORMS FOR PAL 5-3-32

P.C.BOARD LIST

P.C.BOARD NAME	VEP NUMBER (AU-65 NTSC)	VEP NUMBER (AU-63 NTSC)	VEP NUMBER (AU-62 NTSC)	VEP NUMBER (AU-665 NTSC)	VEP NUMBER (AU-65 PAL)	VEP NUMBER (AU-63 PAL)	VEP NUMBER (AU-62 PAL)
1. W0 MOTHER 1	VEP80548A	VEP80548D	VEP80548C	VEP80548B	VEP80548A	VEP80548D	VEP80548C
2. W1 TBC & SYNC GEN	VEP88062A	VEP88062A	VEP88062A	VEP88077A	VEP88062C	VEP88062C	VEP88062C
3. W1 SUB	------------	------------	------------	└─ VEP80666A	------------	------------	------------
4. W2 ENCODER	VEP88063A	VEP88063A	VEP88063A	VEP88063B	VEP88063C	VEP88063C	VEP88063C
5. W2 SUB 9BIT A/D	------------	------------	------------	└─ VEP80569A	└─ VEP80632A	└─ VEP80632A	└─ VEP80632
6. W3 MOD & DEMOD	VEP83098A	VEP83098A	VEP83098A	VEP83098B	VEP83098E	VEP83098F	VEP83098G
7. W3 SUB Y DO BLK	------------	------------	------------	├─ VEP80646A	│ ------------	------------	------------
8. W3 SUB C DO BLK	------------	------------	------------	└─ VEP80647A	│ ------------	------------	------------
9. W3 SUB	------------	------------	------------	------------	└─ VEP80667	------------	------------
10. W4 DEC & CTCM	VEP83099A	------------	------------	VEP83099A	VEP83099B	------------	------------
11. W5 SERVO	VEP82061A	VEP82061D	VEP82061C	VEP82061B	VEP82061E	VEP82061F	VEP82061E
12. W6 AUDIO	VEP84095A	VEP84095C	VEP84095C	VEP84095B	VEP84095D	VEP84095E	VEP84095E
13. W6 SUB SPOT ERASE	└─ VEP80635A	------------	------------	├─ VEP80664A	│ ------------	------------	------------
14. W6 SUB TC TRAP	------------	------------	------------	└─ VEP80635A	└─ VEP80635A	------------	------------
15. B0 MOTHER 2	VEP80549A	VEP80549B	VEP80549C	VEP80549B	VEP80549A	VEP80549B	VEP80549A
16. B1 SYSTEM CONTROL	VEP86088A	VEP86088D	VEP86088C	VEP86088B	VEP86088E	VEP86088F	VEP86088M
17. B2 (TC & BB)	------------	------------	------------	VEP86089B	------------	------------	------------
18. AT H.A	------------	------------	------------	VEP85018A	------------	------------	------------
19. AT POWER	------------	VEP82062A	------------	VEP82062A	------------	VEP82062A	------------
20. AUDIO INPUT SW	------------	------------	------------	VEP84094B	------------	------------	------------
21. AUDIO IN/OUT	VEP84094A	VEP84094C	VEP84094C	VEP84094B	VEP84094A	VEP84094C	VEP84094C
22. AUDIO IN/OUT SUB	└─ VEP80573A	└─ VEP80573A	└─ VEP80573A	└─ VEP80573A	└─ VEP80573A	└─ VEP80573A	└─ VEP80573
23. AUTO OFF LED	VEP00E08C	VEP00E08C	VEP00E08C	VEP00E08C	VEP00E08C	VEP00E08C	VEP00E08C
24. AUDIO VR	VEP84101A	VEP84101C	VEP84101B	VEP84102A	VEP84101A	VEP84101C	VEP84101B
25. CASSETTE CARRIAGE LAMP	VEP00E72A	VEP00E72A	VEP00E72A	VEP00E72A	VEP00E72A	VEP00E72A	VEP00E72A
26. CASSETTE DETEG	VEP00E30A	VEP00E30A	VEP00E30A	VEP00E30A	VEP00E30A	VEP00E30A	VEP00E30A
27. EJECT INTERFACE	VEP80422B	VEP80422B	VEP80422B	VEP80422B	VEP80422B	VEP80422B	VEP80422B
28. EJECT SW	VEP80232A	VEP80232A	VEP80232A	VEP80232A	VEP80232A	VEP80232A	VEP80232A
29. FRONT INTERFACE	VEP80553A	VEP80553C	VEP80553B	VEP80612A	VEP80631A	VEP80631B	VEP80631C
30. FRONT LOADING	VEP80440A	VEP80440A	VEP80440A	VEP80440A	VEP80440A	VEP80440A	VEP80440A
31. FRONT MODE SELECT	VEP80559A	VEP80559D	VEP80559C	VEP80559B	VEP80559A	VEP80559D	VEP80559C
32. FRONT PANEL A	VEP86050C	VEP86086A	VEP86086A	VEP66052C	VEP86050D	VEP86086A	VEP86086A
33. FRONT PANEL B	VEP66022A	VEP86076C	VEP86076C	VEP66022A	VEP66022A	VEP86076D	VEP86076D
34. FRONT PANEL C	VEP86048F	------------	------------	VEP66053E	VEP86048C	------------	------------
35. FRONT SW VR	VEP80552A	VEP80552A	VEP80552A	VEP80613A	VEP80552A	VEP80552A	VEP80552A
36. HEADPHONE VR	VEP80108A	VEP80108A	VEP80108A	VEP80108A	VEP80616A	VEP80616A	VEP80616A
37. LOADING PHOTO	VEP00E04B	VEP00E04B	VEP00E04B	VEP00E04B	VEP00E04B	VEP00E04B	VEP00E04B
38. MECHA INTERFACE CIRCUIT	VEP80550A	VEP80550A	VEP80550A	VEP80550A	VEP80550A	VEP80550A	VEP80550A
39. METER LAMP	VEP80333B	VEP80333B	VEP80333B	VEP80333C	VEP80333A	VEP80333B	VEP80333B
40. POWER FILTER	VEP81042A	VEP81042A	VEP81042A	VEP81042A	VEP81058A	VEP81058A	VEP81058A
41. POWER SUPPLY UNIT	VYK3004	VYK3004	VYK3004	VYK3004	VYK3637	VYK3637	VYK3637
42. RA & HA	VEP85015A	VEP85015C	VEP85015B	VEP85015A	VEP85015D	VEP85015F	VEP85015E
43. TR SENSOR (1)	VEP00E27C	VEP00E27C	VEP00E27C	VEP00E27C	VEP00E27C	VEP00E27C	VEP00E27C
44. TR SENSOR (2)	VEP00E28C	VEP00E28C	VEP00E28C	VEP00E28C	VEP00E28C	VEP00E28C	VEP00E28C
45. UNLOADING PHOTO	VEP00E25C	VEP00E25C	VEP00E25C	VEP00E25C	VEP00E25C	VEP00E25C	VEP00E25C
46. VIDEO/CH4 METER SW	------------	------------	------------	VEP80083B	------------	------------	------------
47. VIDEO I/O	VEP83097A	VEP83097B	VEP83097B	VEP83104A	VEP83097C	VEP83097B	VEP83097B
48. VIDEO VR	------------	------------	------------	VEP80621A	------------	------------	------------
49. YC IN/OUT	VEP80574A	VEP80574A	VEP80574A	VEP80574A	VEP80574A	VEP80574A	VEP80574A
50. 9P REMOTE	VEP80551A	VEP80551A	VEP80551A	VEP80551B	VEP80551A	VEP80551A	VEP80551A
51. 50P REMOTE	------------	------------	------------	VEP80558A	------------	------------	------------

OVERALL BLOCK DIAGRAM [FOR AU-665 NTSC]

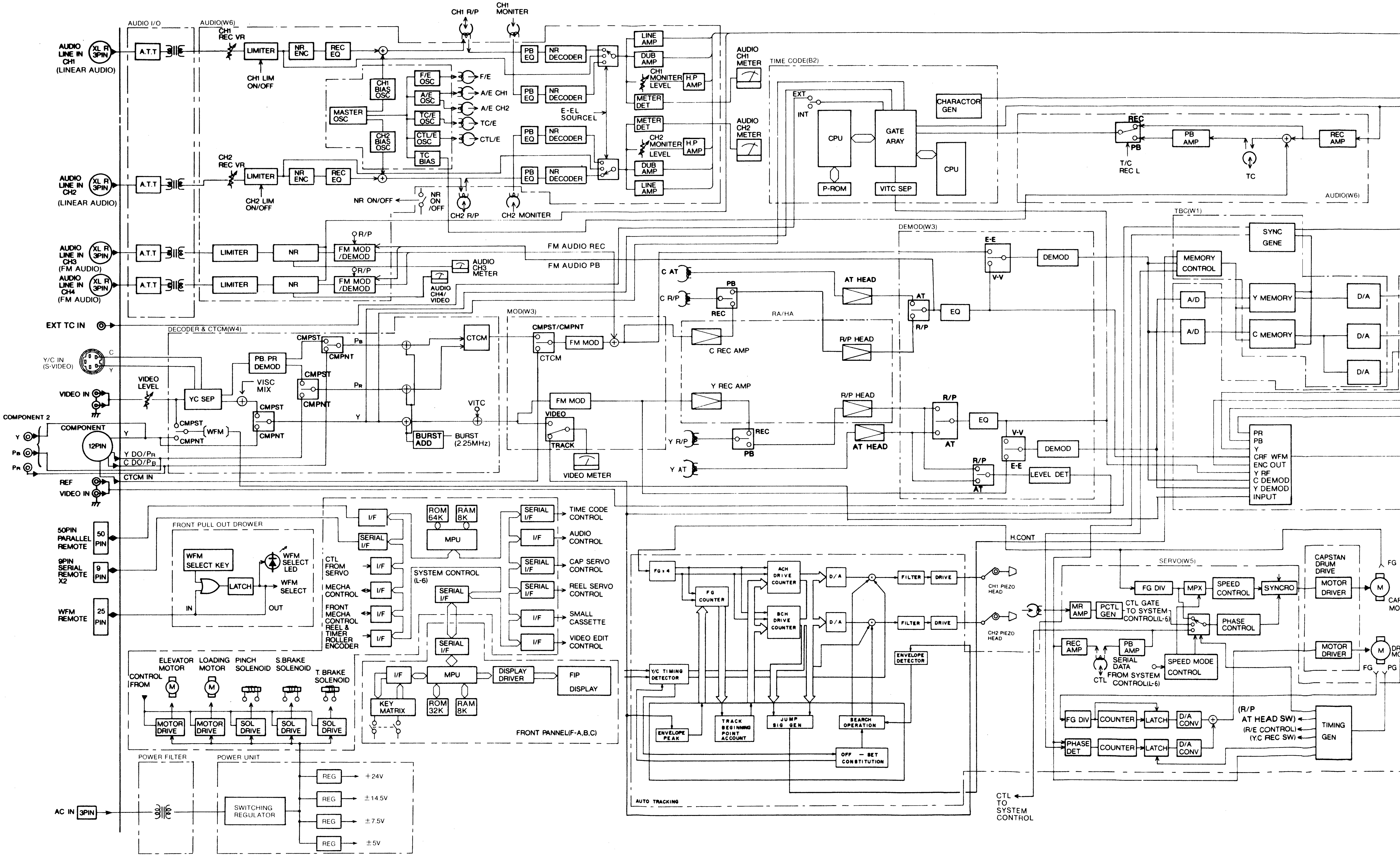

AUDIO I/O
AUDIO(W6)
AUDIO LINE IN CH1 (LINEAR AUDIO)
XLR 3PIN
A.T.T
CH1 REC VR
LIMITER
NR ENC
REC EQ
CH1 LIM ON/OFF
CH1 R/P
CH1 MONITER
PB EQ
NR DECODER
LINE AMP
DUB AMP
CH1 MONITER LEVEL
H.P AMP
METER DET
AUDIO CH1 METER
CH1 BIAS OSC
MASTER OSC
CH2 BIAS OSC
F/E OSC
A/E OSC
TC/E OSC
CTL/E OSC
TC BIAS
F/E
A/E CH1
A/E CH2
TC/E
CTL/E
E-E L SOURCE L
CH2 MONITER LEVEL
AUDIO CH2 METER
AUDIO LINE IN CH2 (LINEAR AUDIO)
CH2 REC VR
CH2 LIM ON/OFF
NR ON/OFF
NR ON /OFF
CH2 R/P
CH2 MONITER
TIME CODE(B2)
EXT
INT
CPU
GATE ARAY
P-ROM
VITC SEP
CHARACTOR GEN
REC
PB
T/C REC L
PB AMP
TC
REC AMP
AUDIO(W6)
AUDIO LINE IN CH3 (FM AUDIO)
AUDIO LINE IN CH4 (FM AUDIO)
LIMITER
NR
R/P
FM MOD /DEMOD
AUDIO CH3 METER
AUDIO CH4/ VIDEO
FM AUDIO REC
FM AUDIO PB
EXT TC IN
DECODER & CTCM(W4)
Y/C IN (S-VIDEO)
C
Y
VIDEO IN
VIDEO LEVEL
YC SEP
PB. PR DEMOD
VISC MIX
CMPST
CMPNT
PB
PR
CTCM
BURST ADD
BURST (2.25MHz)
VITC
WFM
COMPONENT 2
COMPONENT
12PIN
Y DO/PR
C DO/PB
CTCM IN
REF VIDEO IN
MOD(W3)
CMPST/CMPNT
FM MOD
VIDEO
TRACK
VIDEO METER
C AT
C R/P
AT HEAD
C REC AMP
R/P HEAD
Y REC AMP
RA/HA
Y R/P
Y AT
DEMOD(W3)
E-E
V-V
DEMOD
AT
EQ
LEVEL DET
TBC(W1)
SYNC GENE
MEMORY CONTROL
A/D
Y MEMORY
C MEMORY
D/A
PR PB Y CRF WFM ENC OUT Y RF C DEMOD Y DEMOD INPUT
50PIN PARALLEL REMOTE
9PIN SERIAL REMOTE X2
WFM REMOTE
25 PIN
FRONT PULL OUT DROWER
WFM SELECT KEY
LATCH
WFM SELECT LED
WFM SELECT
IN
OUT
I/F
SERIAL I/F
CTL FROM SERVO
MECHA CONTROL
FRONT MECHA CONTROL REEL & TIMER ROLLER ENCODER
ROM 64K
RAM 8K
MPU
SYSTEM CONTROL (L-6)
TIME CODE CONTROL
AUDIO CONTROL
CAP SERVO CONTROL
REEL SERVO CONTROL
SMALL CASSETTE
VIDEO EDIT CONTROL
ELEVATOR MOTOR
LOADING MOTOR
PINCH SOLENOID
S.BRAKE SOLENOID
T.BRAKE SOLENOID
CONTROL FROM
MOTOR DRIVE
SOL DRIVE
KEY MATRIX
ROM 32K
DISPLAY DRIVER
FIP DISPLAY
FRONT PANNEL(F-A,B,C)
POWER FILTER
POWER UNIT
AC IN 3PIN
SWITCHING REGULATOR
REG
+24V
±14.5V
±7.5V
±5V
H.CONT
FG × 4
FG COUNTER
ACH DRIVE COUNTER
BCH DRIVE COUNTER
FILTER
DRIVE
CH1 PIEZO HEAD
CH2 PIEZO HEAD
ENVELOPE DETECTOR
Y/C TIMING DETECTOR
ENVELOPE PEAK
TRACK BEGINNING POINT ACCOUNT
JUMP SIG GEN
SEARCH OPERATION
OFF - SET CONSTITUTION
AUTO TRACKING
CTL TO SYSTEM CONTROL
SERVO(W5)
FG DIV
MPX
SPEED CONTROL
SYNCRO
CAPSTAN DRUM DRIVE
MOTOR DRIVER
FG
M
MR AMP
PCTL GEN
CTL GATE TO SYSTEM CONTROL(L-6)
PHASE CONTROL
REC AMP
PB AMP
SERIAL DATA FROM SYSTEM CONTROL(L-6)
CTL
SPEED MODE CONTROL
PG
COUNTER
LATCH
D/A CONV
PHASE DET
(R/P AT HEAD SW)
(R/E CONTROL)
(Y.C REC SW)
TIMING GEN

TSC]

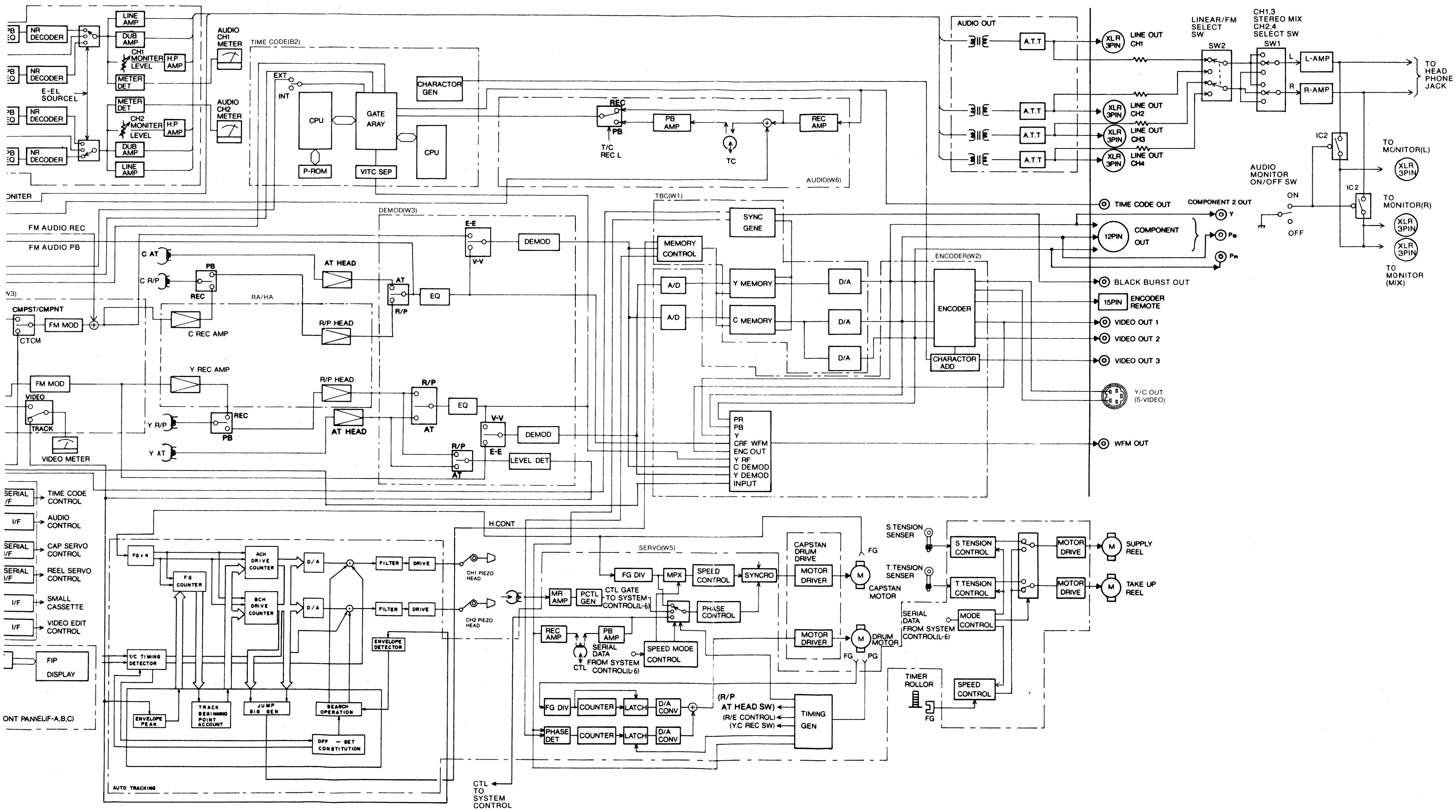
PB
EQ
NR DECODER
LINE AMP
DUB AMP
CH1 MONITER LEVEL
H.P AMP
METER DET
AUDIO CH1 METER
E-EL SOURCE L
AUDIO CH2 METER
CH2 MONITER LEVEL
MONITER
TIME CODE(B2)
EXT
INT
CPU
GATE ARAY
CHARACTOR GEN
P-ROM
VITC SEP
REC
PB
T/C REC L
PB AMP
REC AMP
TC
AUDIO(W6)
AUDIO OUT
A.T.T
XLR 3PIN
LINE OUT CH1
LINE OUT CH2
LINE OUT CH3
LINE OUT CH4
LINEAR/FM SELECT SW
SW2
CH1,3 STEREO MIX CH2,4 SELECT SW
SW1
L
R
L-AMP
R-AMP
TO HEAD PHONE JACK
IC2
TO MONITOR(L)
AUDIO MONITOR ON/OFF SW
ON
OFF
TO MONITOR(R)
TO MONITOR (MIX)
FM AUDIO REC
FM AUDIO PB
DEMOD(W3)
E-E
V-V
DEMOD
C AT
C R/P
AT HEAD
RA/HA
AT
R/P
EQ
C REC AMP
R/P HEAD
CMPST/CMPNT
FM MOD
CTCM
Y REC AMP
VIDEO
TRACK
Y R/P
Y AT
VIDEO METER
LEVEL DET
TBC(W1)
MEMORY CONTROL
SYNC GENE
A/D
Y MEMORY
C MEMORY
D/A
ENCODER(W2)
ENCODER
CHARACTOR ADD
PR
PB
Y
CRF WFM
ENC OUT
Y RF
C DEMOD
Y DEMOD
INPUT
TIME CODE OUT
COMPONENT 2 OUT
Y
PB
PR
12PIN
COMPONENT OUT
BLACK BURST OUT
15PIN
ENCODER REMOTE
VIDEO OUT 1
VIDEO OUT 2
VIDEO OUT 3
Y/C OUT (S-VIDEO)
WFM OUT
SERIAL I/F
TIME CODE CONTROL
I/F
AUDIO CONTROL
CAP SERVO CONTROL
REEL SERVO CONTROL
SMALL CASSETTE
VIDEO EDIT CONTROL
FIP DISPLAY
FRONT PANNEL(F-A,B,C)
H.CONT
FG÷4
FG COUNTER
ACH DRIVE COUNTER
BCH DRIVE COUNTER
D/A
FILTER
DRIVE
CH1 PIEZO HEAD
CH2 PIEZO HEAD
ENVELOPE DETECTOR
Y/C TIMING DETECTOR
ENVELOPE PEAK
TRACK BEGINNING POINT ACCOUNT
JUMP SIG GEN
SEARCH OPERATION
OFF-SET CONSTITUTION
AUTO TRACKING
CTL TO SYSTEM CONTROL
SERVO(W5)
MR AMP
PCTL GEN
CTL GATE TO SYSTEM CONTROL(L-6)
FG DIV
MPX
SPEED CONTROL
SYNCRO
PHASE CONTROL
CAPSTAN DRUM DRIVE
MOTOR DRIVER
M
FG
CAPSTAN MOTOR
DRUM MOTOR
PG
REC AMP
PB AMP
SERIAL DATA FROM SYSTEM CONTROL(L-6)
CTL
SPEED MODE CONTROL
COUNTER
LATCH
D/A CONV
PHASE DET
(R/P AT HEAD SW)
(R/E CONTROL)
(Y.C REC SW)
TIMING GEN
S.TENSION SENSER
T.TENSION SENSER
S.TENSION CONTROL
T.TENSION CONTROL
MOTOR DRIVE
SUPPLY REEL
TAKE UP REEL
SERIAL DATA FROM SYSTEM CONTROL(L-6)
MODE CONTROL
TIMER ROLLOR
SPEED CONTROL

OVER ALL BLOCK DIAGRAM[FOR AU-65]

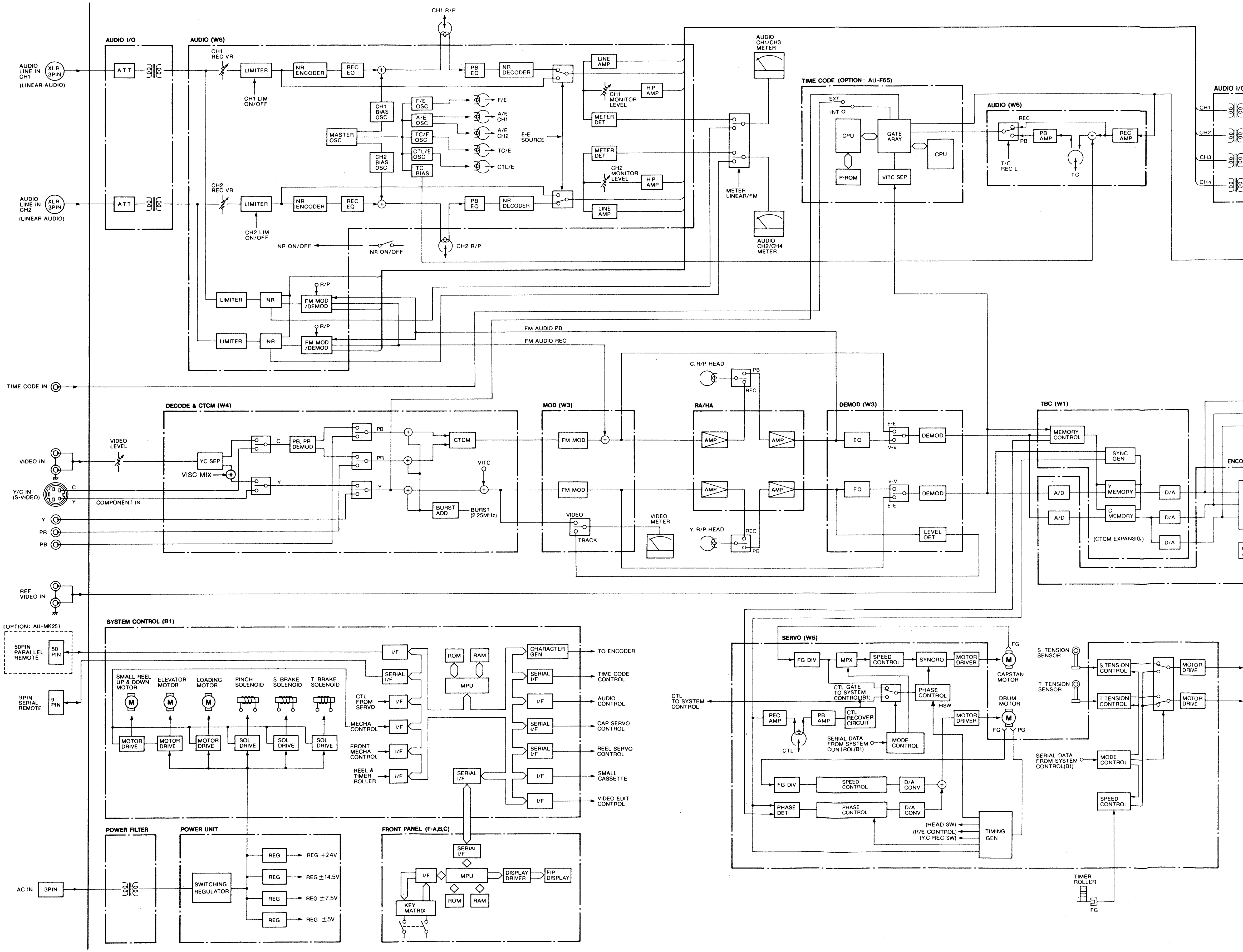
CH1 R/P
AUDIO I/O
AUDIO (W6)
AUDIO LINE IN CH1 (LINEAR-AUDIO)
XLR 3PIN
A.T.T
CH1 REC VR
LIMITER
NR ENCODER
REC EQ
PB EQ
NR DECODER
LINE AMP
H.P AMP
CH1 MONITOR LEVEL
METER DET
CH1 LIM ON/OFF
CH1 BIAS OSC
MASTER OSC
CH2 BIAS OSC
F/E OSC
A/E OSC
TC/E OSC
CTL/E OSC
TC BIAS
F/E
A/E CH1
A/E CH2
TC/E
CTL/E
E-E SOURCE
CH2 MONITOR LEVEL
AUDIO CH1/CH3 METER
METER LINEAR/FM
AUDIO CH2/CH4 METER
AUDIO LINE IN CH2 (LINEAR AUDIO)
CH2 REC VR
CH2 LIM ON/OFF
NR ON/OFF
CH2 R/P
TIME CODE (OPTION : AU-F65)
EXT
INT
CPU
GATE ARAY
P-ROM
VITC SEP
AUDIO (W6)
REC
PB
PB AMP
REC AMP
T/C REC L
TC
AUDIO I/O
CH1
CH2
CH3
CH4
R/P
FM MOD /DEMOD
NR
FM AUDIO PB
FM AUDIO REC
TIME CODE IN
C R/P HEAD
DECODE & CTCM (W4)
MOD (W3)
RA/HA
DEMOD (W3)
TBC (W1)
VIDEO LEVEL
VIDEO IN
YC SEP
VISC MIX
C
Y
PB, PR DEMOD
PR
CTCM
VITC
BURST ADD
BURST (2.25MHz)
Y/C IN (S-VIDEO)
COMPONENT IN
FM MOD
AMP
VIDEO
TRACK
VIDEO METER
Y R/P HEAD
EQ
E-E
V-V
DEMOD
LEVEL DET
MEMORY CONTROL
SYNC GEN
ENCO
A/D
Y MEMORY
C MEMORY
D/A
(CTCM EXPANSION)
REF VIDEO IN
(OPTION : AU-MK25)
50PIN PARALLEL REMOTE
50 PIN
9PIN SERIAL REMOTE
9 PIN
SYSTEM CONTROL (B1)
I/F
SERIAL I/F
ROM
RAM
MPU
CHARACTER GEN
TO ENCODER
TIME CODE CONTROL
AUDIO CONTROL
CAP SERVO CONTROL
REEL SERVO CONTROL
SMALL CASSETTE
VIDEO EDIT CONTROL
SMALL REEL UP & DOWN MOTOR
ELEVATOR MOTOR
LOADING MOTOR
PINCH SOLENOID
S. BRAKE SOLENOID
T. BRAKE SOLENOID
M
MOTOR DRIVE
SOL DRIVE
CTL FROM SERVO
MECHA CONTROL
FRONT MECHA CONTROL
REEL & TIMER ROLLER
CTL TO SYSTEM CONTROL
SERVO (W5)
FG DIV
MPX
SPEED CONTROL
SYNCRO
MOTOR DRIVER
FG
CAPSTAN MOTOR
CTL GATE TO SYSTEM CONTROL(B1)
PHASE CONTROL
HSW
DRUM MOTOR
PG
REC AMP
PB AMP
CTL RECOVER CIRCUIT
CTL
SERIAL DATA FROM SYSTEM CONTROL(B1)
MODE CONTROL
D/A CONV
PHASE DET
(HEAD SW)
(R/E CONTROL)
(Y.C REC SW)
TIMING GEN
S. TENSION SENSOR
T. TENSION SENSOR
S.TENSION CONTROL
T.TENSION CONTROL
MOTOR DRIVE
TIMER ROLLER
POWER FILTER
POWER UNIT
AC IN
3PIN
SWITCHING REGULATOR
REG
REG +24V
REG ±14.5V
REG ±7.5V
REG ±5V
FRONT PANEL (F-A,B,C)
KEY MATRIX
DISPLAY DRIVER
FIP DISPLAY

AGRAM[FOR AU-65]

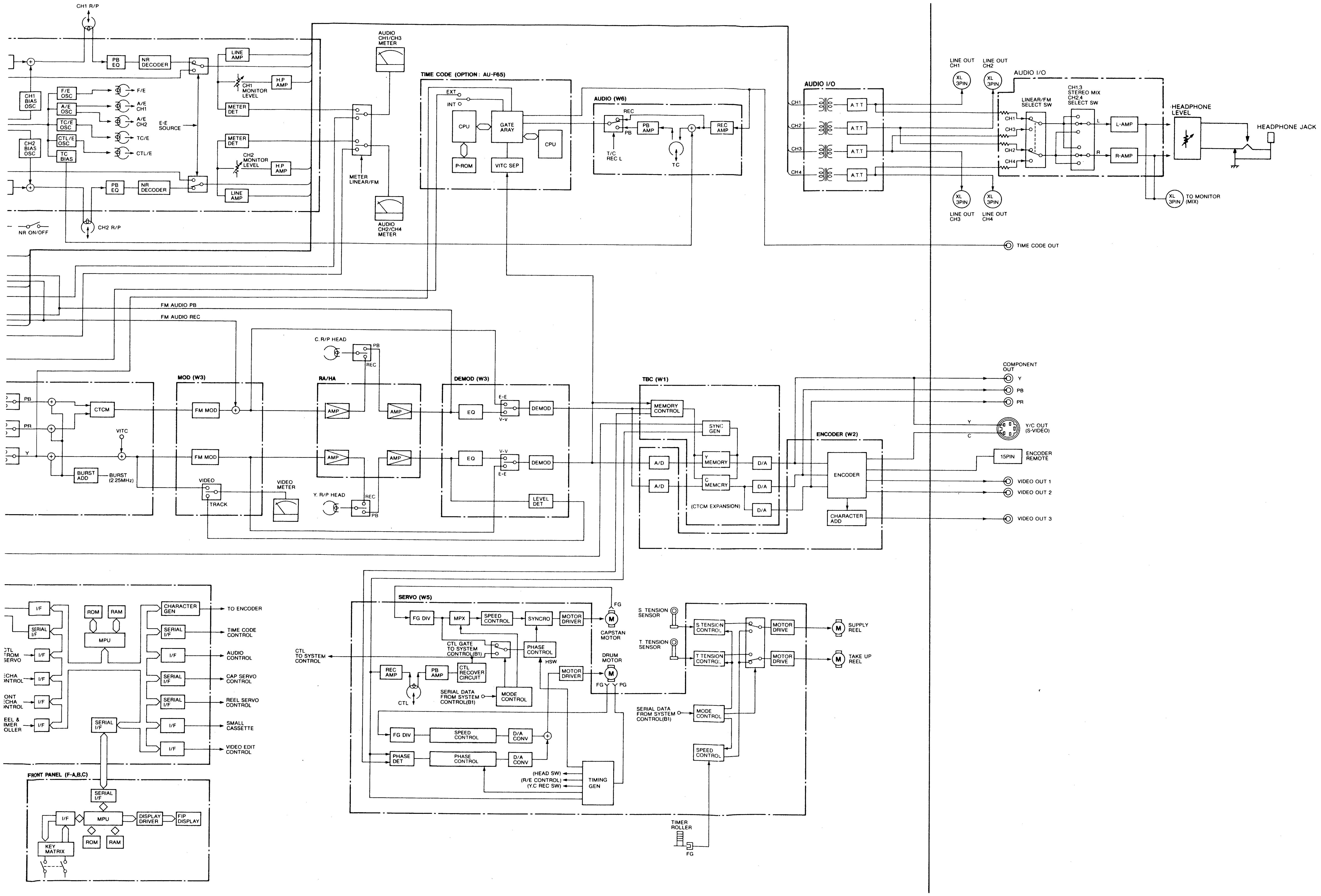

CH1 R/P
PB EQ
NR DECODER
LINE AMP
H.P AMP
CH1 MONITOR LEVEL
METER DET
CH1 BIAS OSC
F/E OSC
A/E OSC
TC/E OSC
CTL/E OSC
TC BIAS
CH2 BIAS OSC
F/E
A/E CH1
A/E CH2
TC/E
CTL/E
E-E SOURCE
CH2 MONITOR LEVEL
CH2 R/P
NR ON/OFF
AUDIO CH1/CH3 METER
METER LINEAR/FM
AUDIO CH2/CH4 METER
TIME CODE (OPTION : AU-F65)
EXT
INT
CPU
GATE ARAY
P-ROM
VITC SEP
AUDIO (W6)
REC
PB
PB AMP
REC AMP
T/C REC L
TC
AUDIO I/O
CH1
CH2
CH3
CH4
ATT
LINE OUT CH1
LINE OUT CH2
LINE OUT CH3
LINE OUT CH4
XL 3PIN
LINEAR/FM SELECT SW
CH1.3 STEREO MIX CH2.4 SELECT SW
L-AMP
R-AMP
HEADPHONE LEVEL
HEADPHONE JACK
TO MONITOR (MIX)
TIME CODE OUT
FM AUDIO PB
FM AUDIO REC
C. R/P HEAD
MOD (W3)
RA/HA
DEMOD (W3)
PB
PR
Y
CTCM
FM MOD
VITC
BURST ADD
BURST (2.25MHz)
VIDEO
TRACK
VIDEO METER
AMP
Y. R/P HEAD
EQ
E-E
V-V
DEMOD
LEVEL DET
TBC (W1)
MEMORY CONTROL
SYNC GEN
A/D
Y MEMORY
C MEMORY
D/A
(CTCM EXPANSION)
ENCODER (W2)
ENCODER
CHARACTER ADD
COMPONENT OUT
Y/C OUT (S-VIDEO)
15PIN
ENCODER REMOTE
VIDEO OUT 1
VIDEO OUT 2
VIDEO OUT 3
I/F
SERIAL I/F
ROM
RAM
MPU
CHARACTER GEN
TO ENCODER
TIME CODE CONTROL
AUDIO CONTROL
CAP SERVO CONTROL
REEL SERVO CONTROL
SMALL CASSETTE
VIDEO EDIT CONTROL
CTL FROM SERVO
MECHA CONTROL
FRONT MECHA CONTROL
REEL & TIMER ROLLER
FRONT PANEL (F-A,B,C)
DISPLAY DRIVER
FIP DISPLAY
KEY MATRIX
CTL TO SYSTEM CONTROL
SERVO (W5)
FG DIV
MPX
SPEED CONTROL
SYNCRO
MOTOR DRIVER
FG
CAPSTAN MOTOR
CTL GATE TO SYSTEM CONTROL(B1)
PHASE CONTROL
HSW
REC AMP
PB AMP
CTL RECOVER CIRCUIT
CTL
SERIAL DATA FROM SYSTEM CONTROL(B1)
MODE CONTROL
DRUM MOTOR
PG
D/A CONV
PHASE DET
(HEAD SW)
(R/E CONTROL)
(Y.C REC SW)
TIMING GEN
S. TENSION SENSOR
T. TENSION SENSOR
S TENSION CONTROL
T TENSION CONTROL
MOTOR DRIVE
SUPPLY REEL
TAKE UP REEL
TIMER ROLLER

OVER ALL BLOCK DIAGRAM[FOR AU-63]

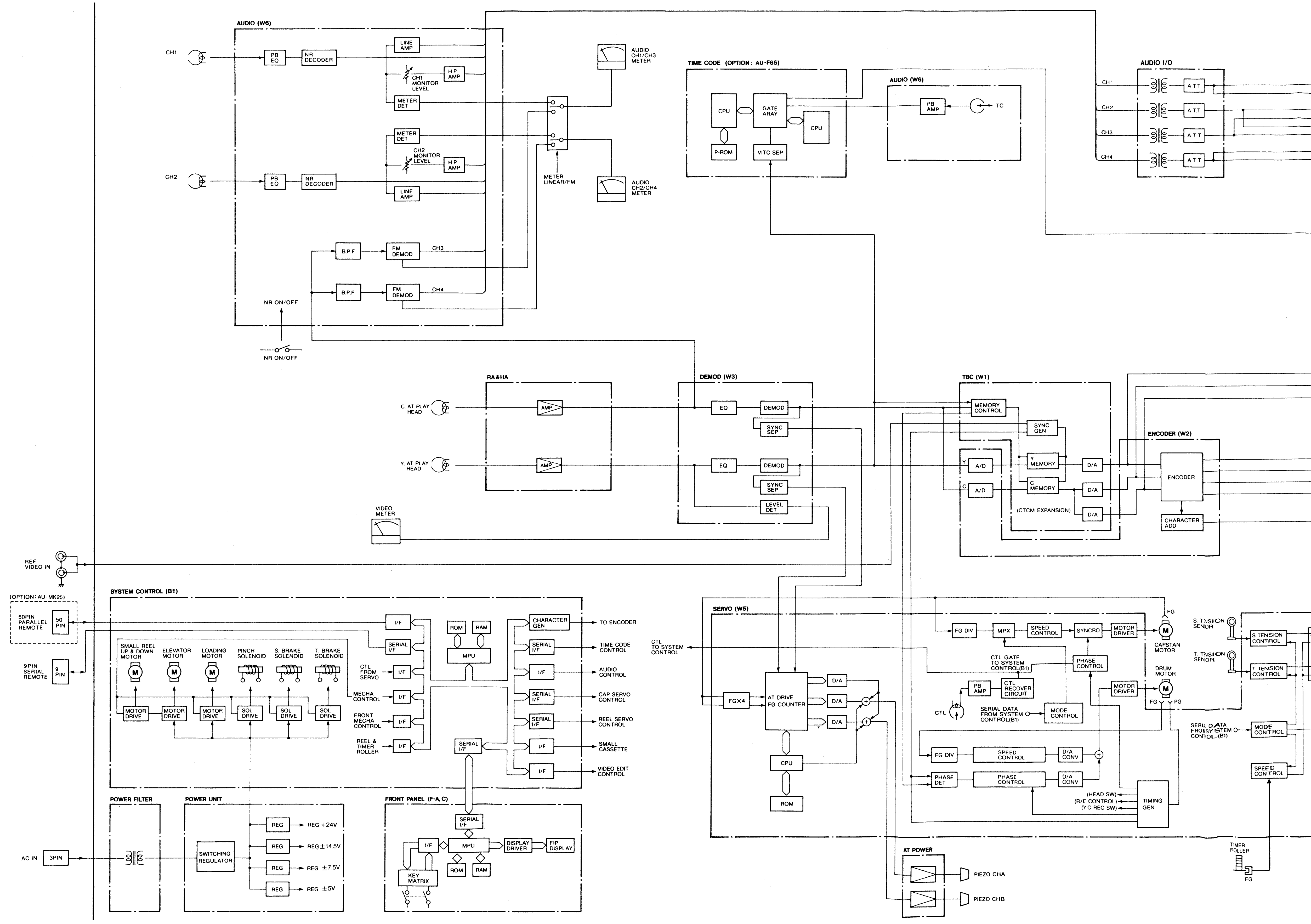

AUDIO (W6)
CH1
PB EQ
NR DECODER
LINE AMP
CH1 MONITOR LEVEL
H P AMP
METER DET
METER DET
CH2 MONITOR LEVEL
H P AMP
CH2
PB EQ
NR DECODER
LINE AMP
B.P.F
FM DEMOD
CH3
B.P.F
FM DEMOD
CH4
NR ON/OFF
NR ON/OFF
AUDIO CH1/CH3 METER
METER LINEAR/FM
AUDIO CH2/CH4 METER
TIME CODE (OPTION : AU-F65)
CPU
GATE ARAY
CPU
P-ROM
VITC SEP
AUDIO (W6)
PB AMP
TC
AUDIO I/O
CH1
CH2
CH3
CH4
A.T.T
A.T.T
A.T.T
A.T.T
RA&HA
C AT PLAY HEAD
AMP
Y AT PLAY HEAD
AMP
DEMOD (W3)
EQ
DEMOD
SYNC SEP
EQ
DEMOD
SYNC SEP
LEVEL DET
VIDEO METER
TBC (W1)
MEMORY CONTROL
SYNC GEN
Y
A/D
Y MEMORY
D/A
C
A/D
C MEMORY
D/A
(CTCM EXPANSION)
D/A
ENCODER (W2)
ENCODER
CHARACTER ADD
REF VIDEO IN
(OPTION: AU-MK25)
50PIN PARALLEL REMOTE
50 PIN
9PIN SERIAL REMOTE
9 PIN
SYSTEM CONTROL (B1)
SMALL REEL UP & DOWN MOTOR
ELEVATOR MOTOR
LOADING MOTOR
PINCH SOLENOID
S. BRAKE SOLENOID
T. BRAKE SOLENOID
M
M
M
MOTOR DRIVE
MOTOR DRIVE
MOTOR DRIVE
SOL DRIVE
SOL DRIVE
SOL DRIVE
I/F
SERIAL I/F
CTL FROM SERVO
I/F
MECHA CONTROL
I/F
FRONT MECHA CONTROL
I/F
REEL & TIMER ROLLER
I/F
ROM
RAM
MPU
SERIAL I/F
CHARACTER GEN
TO ENCODER
SERIAL I/F
TIME CODE CONTROL
I/F
AUDIO CONTROL
SERIAL I/F
CAP SERVO CONTROL
SERIAL I/F
REEL SERVO CONTROL
I/F
SMALL CASSETTE
I/F
VIDEO EDIT CONTROL
CTL TO SYSTEM CONTROL
POWER FILTER
POWER UNIT
AC IN
3PIN
SWITCHING REGULATOR
REG
REG +24V
REG
REG±14.5V
REG
REG ±7.5V
REG
REG ±5V
FRONT PANEL (F-A, C)
SERIAL I/F
I/F
MPU
DISPLAY DRIVER
FIP DISPLAY
KEY MATRIX
ROM
RAM
SERVO (W5)
FG×4
AT DRIVE FG COUNTER
D/A
D/A
D/A
+
+
CPU
ROM
FG DIV
MPX
SPEED CONTROL
SYNCRO
MOTOR DRIVER
FG
M
CAPSTAN MOTOR
CTL GATE TO SYSTEM CONTROL(B1)
PHASE CONTROL
PB AMP
CTL RECOVER CIRCUIT
CTL
SERIAL DATA FROM SYSTEM CONTROL(B1)
MODE CONTROL
MOTOR DRIVER
M
DRUM MOTOR
FG
PG
FG DIV
SPEED CONTROL
D/A CONV
+
PHASE DET
PHASE CONTROL
D/A CONV
(HEAD SW)
(R/E CONTROL)
(Y.C REC SW)
TIMING GEN
S TENSION SENSOR
S TENSION CONTROL
T TENSION SENSOR
T TENSION CONTROL
SERIAL DATA FROM SYSTEM CONTROL(B1)
MODE CONTROL
SPEED CONTROL
TIMER ROLLER
FG
AT POWER
PIEZO CHA
PIEZO CHB

OVER ALL BLOCK DIAGRAM[FOR AU-63]

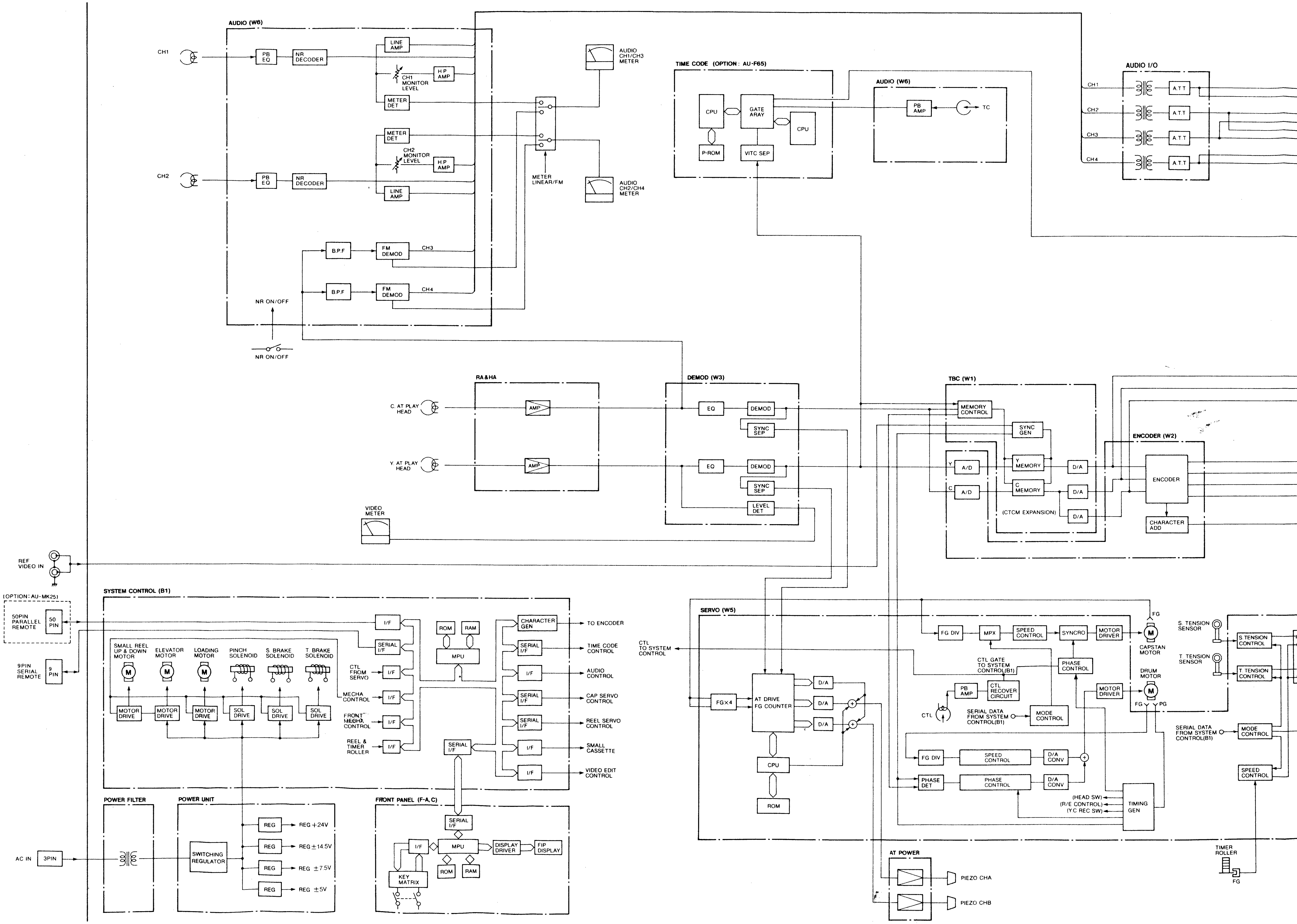

AUDIO (W6)
CH1
CH2
PB EQ
NR DECODER
LINE AMP
CH1 MONITOR LEVEL
H.P AMP
METER DET
CH2 MONITOR LEVEL
B.P.F
FM DEMOD
CH3
CH4
NR ON/OFF
METER LINEAR/FM
AUDIO CH1/CH3 METER
AUDIO CH2/CH4 METER
TIME CODE (OPTION : AU-F65)
CPU
GATE ARAY
P-ROM
VITC SEP
AUDIO (W6)
PB AMP
TC
AUDIO I/O
A.T.T
RA&HA
C. AT PLAY HEAD
Y. AT PLAY HEAD
AMP
DEMOD (W3)
EQ
DEMOD
SYNC SEP
LEVEL DET
VIDEO METER
TBC (W1)
MEMORY CONTROL
SYNC GEN
Y
C
A/D
Y MEMORY
C MEMORY
D/A
(CTCM EXPANSION)
ENCODER (W2)
ENCODER
CHARACTER ADD
REF VIDEO IN
(OPTION : AU-MK25)
50PIN PARALLEL REMOTE
50 PIN
9PIN SERIAL REMOTE
9 PIN
SYSTEM CONTROL (B1)
SMALL REEL UP & DOWN MOTOR
ELEVATOR MOTOR
LOADING MOTOR
PINCH SOLENOID
S. BRAKE SOLENOID
T. BRAKE SOLENOID
MOTOR DRIVE
SOL DRIVE
I/F
SERIAL I/F
CTL FROM SERVO
MECHA CONTROL
FRONT MECHA CONTROL
REEL & TIMER ROLLER
ROM
RAM
MPU
CHARACTER GEN
TO ENCODER
TIME CODE CONTROL
AUDIO CONTROL
CAP SERVO CONTROL
REEL SERVO CONTROL
SMALL CASSETTE
VIDEO EDIT CONTROL
CTL TO SYSTEM CONTROL
POWER FILTER
POWER UNIT
AC IN
3PIN
SWITCHING REGULATOR
REG
REG +24V
REG ±14.5V
REG ±7.5V
REG ±5V
FRONT PANEL (F-A,C)
SERIAL I/F
DISPLAY DRIVER
FIP DISPLAY
KEY MATRIX
SERVO (W5)
FG×4
AT DRIVE FG COUNTER
CPU
ROM
D/A
FG DIV
MPX
SPEED CONTROL
SYNCRO
MOTOR DRIVER
FG
CAPSTAN MOTOR
CTL GATE TO SYSTEM CONTROL(B1)
PHASE CONTROL
PB AMP
CTL RECOVER CIRCUIT
CTL
SERIAL DATA FROM SYSTEM CONTROL(B1)
MODE CONTROL
DRUM MOTOR
PG
D/A CONV
PHASE DET
PHASE CONTROL
(HEAD SW)
(R/E CONTROL)
(Y.C REC SW)
TIMING GEN
AT POWER
PIEZO CHA
PIEZO CHB
S. TENSION SENSOR
T. TENSION SENSOR
S. TENSION CONTROL
T. TENSION CONTROL
MODE CONTROL
SPEED CONTROL
TIMER ROLLER

OVER ALL BLOCK DIAGRAM[FOR AU-62]

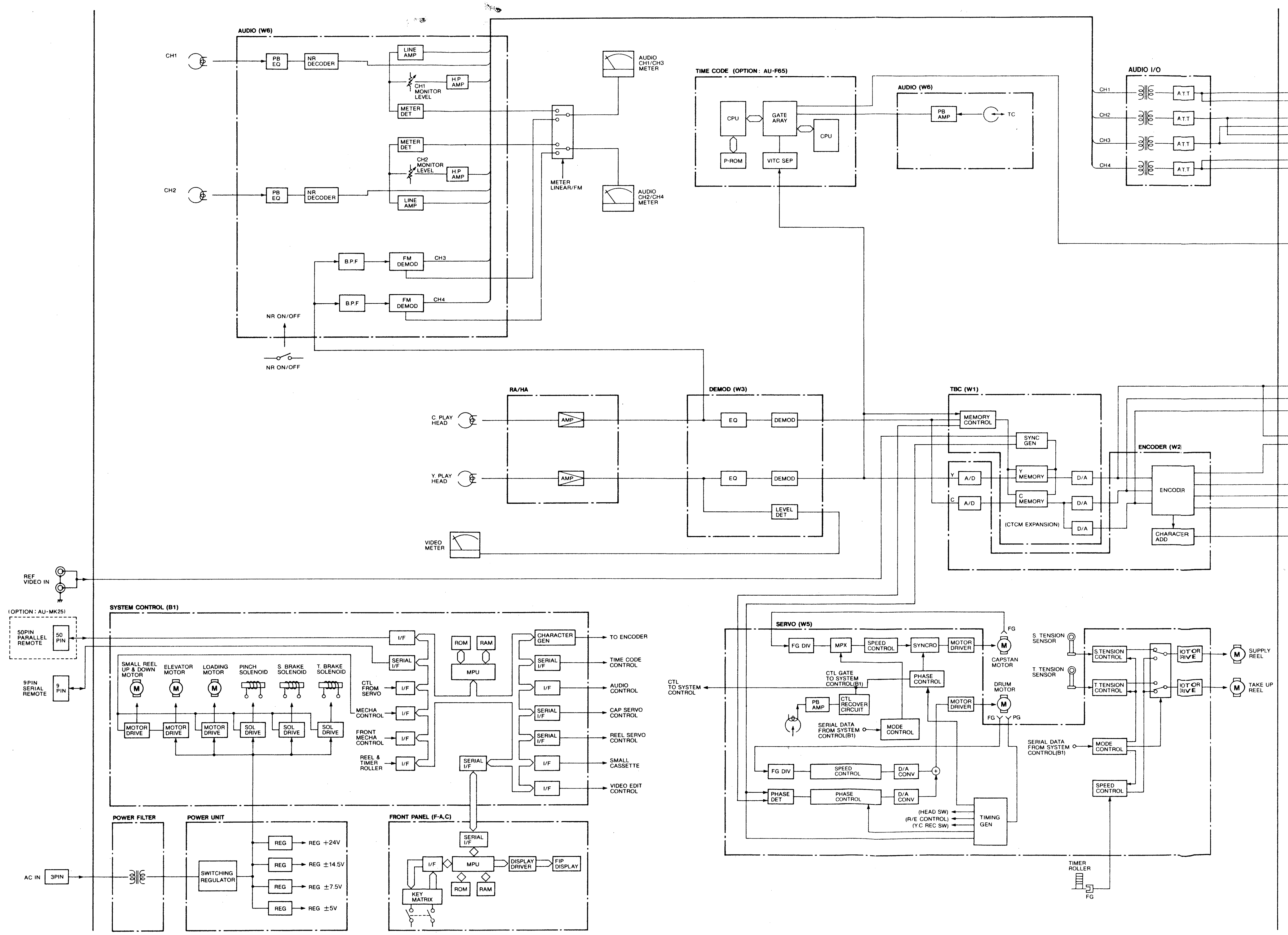

AUDIO (W6)
CH1
CH2
PB EQ
NR DECODER
LINE AMP
H.P AMP
CH1 MONITOR LEVEL
METER DET
CH2 MONITOR LEVEL
B.P.F
FM DEMOD
CH3
CH4
NR ON/OFF
METER LINEAR/FM
AUDIO CH1/CH3 METER
AUDIO CH2/CH4 METER
TIME CODE (OPTION: AU-F65)
CPU
GATE ARAY
P-ROM
VITC SEP
AUDIO (W6)
PB AMP
TC
AUDIO I/O
ATT
RA/HA
C PLAY HEAD
Y PLAY HEAD
AMP
DEMOD (W3)
EQ
DEMOD
LEVEL DET
VIDEO METER
TBC (W1)
MEMORY CONTROL
SYNC GEN
A/D
Y MEMORY
C MEMORY
D/A
(CTCM EXPANSION)
ENCODER (W2)
ENCODER
CHARACTER ADD
REF VIDEO IN
(OPTION: AU-MK25)
50PIN PARALLEL REMOTE
50 PIN
9PIN SERIAL REMOTE
9 PIN
SYSTEM CONTROL (B1)
I/F
SERIAL I/F
ROM
RAM
MPU
CHARACTER GEN
SMALL REEL UP & DOWN MOTOR
ELEVATOR MOTOR
LOADING MOTOR
PINCH SOLENOID
S. BRAKE SOLENOID
T. BRAKE SOLENOID
M
MOTOR DRIVE
SOL DRIVE
CTL FROM SERVO
MECHA CONTROL
FRONT MECHA CONTROL
REEL & TIMER ROLLER
TO ENCODER
TIME CODE CONTROL
AUDIO CONTROL
CAP SERVO CONTROL
REEL SERVO CONTROL
SMALL CASSETTE
VIDEO EDIT CONTROL
POWER FILTER
POWER UNIT
AC IN
3PIN
SWITCHING REGULATOR
REG
REG +24V
REG ±14.5V
REG ±7.5V
REG ±5V
FRONT PANEL (F-A,C)
SERIAL I/F
MPU
DISPLAY DRIVER
FIP DISPLAY
KEY MATRIX
CTL TO SYSTEM CONTROL
SERVO (W5)
FG DIV
MPX
SPEED CONTROL
SYNCRO
MOTOR DRIVER
FG
CAPSTAN MOTOR
DRUM MOTOR
PG
CTL GATE TO SYSTEM CONTROL(B1)
PHASE CONTROL
PB AMP
CTL RECOVER CIRCUIT
SERIAL DATA FROM SYSTEM CONTROL(B1)
MODE CONTROL
D/A CONV
PHASE DET
(HEAD SW)
(R/E CONTROL)
(Y.C REC SW)
TIMING GEN
S. TENSION SENSOR
T. TENSION SENSOR
S.TENSION CONTROL
T.TENSION CONTROL
MOTOR DRIVE
SUPPLY REEL
TAKE UP REEL
SERIAL DATA FROM SYSTEM CONTROL(B1)
MODE CONTROL
SPEED CONTROL
TIMER ROLLER
FG

GRAM[FOR AU-62]

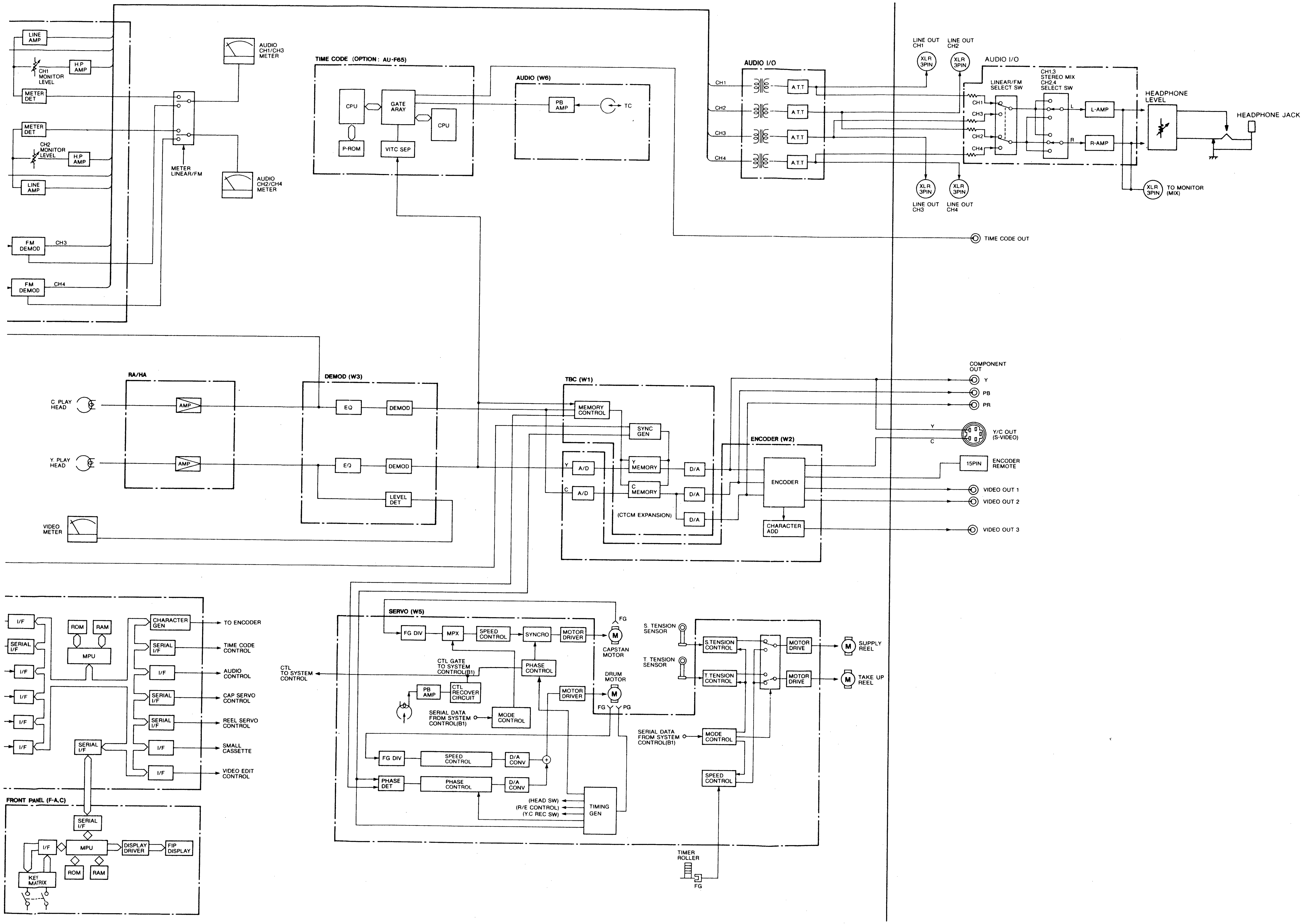

LINE AMP
CH1 MONITOR LEVEL
H.P AMP
METER DET
METER DET
CH2 MONITOR LEVEL
H.P AMP
LINE AMP
AUDIO CH1/CH3 METER
AUDIO CH2/CH4 METER
METER LINEAR/FM
FM DEMOD
CH3
FM DEMOD
CH4
TIME CODE (OPTION : AU-F65)
CPU
GATE ARAY
CPU
P-ROM
VITC SEP
AUDIO (W6)
PB AMP
TC
AUDIO I/O
CH1
CH2
CH3
CH4
A.T.T
A.T.T
A.T.T
A.T.T
LINE OUT CH1
LINE OUT CH2
XLR 3PIN
XLR 3PIN
XLR 3PIN
XLR 3PIN
LINE OUT CH3
LINE OUT CH4
AUDIO I/O
LINEAR/FM SELECT SW
CH1,3 STEREO MIX CH2,4 SELECT SW
CH1
CH3
CH2
CH4
L
R
L-AMP
R-AMP
HEADPHONE LEVEL
HEADPHONE JACK
XLR 3PIN
TO MONITOR (MIX)
TIME CODE OUT
RA/HA
C PLAY HEAD
Y PLAY HEAD
AMP
AMP
DEMOD (W3)
EQ
DEMOD
EQ
DEMOD
LEVEL DET
VIDEO METER
TBC (W1)
MEMORY CONTROL
SYNC GEN
Y
A/D
Y MEMORY
D/A
C
A/D
C MEMORY
D/A
(CTCM EXPANSION)
D/A
ENCODER (W2)
ENCODER
CHARACTER ADD
COMPONENT OUT
Y
PB
PR
Y
C
Y/C OUT (S-VIDEO)
15PIN
ENCODER REMOTE
VIDEO OUT 1
VIDEO OUT 2
VIDEO OUT 3
I/F
SERIAL I/F
I/F
I/F
I/F
I/F
ROM
RAM
MPU
SERIAL I/F
CHARACTER GEN
SERIAL I/F
I/F
SERIAL I/F
SERIAL I/F
I/F
I/F
TO ENCODER
TIME CODE CONTROL
AUDIO CONTROL
CAP SERVO CONTROL
REEL SERVO CONTROL
SMALL CASSETTE
VIDEO EDIT CONTROL
FRONT PANEL (F-A,C)
SERIAL I/F
I/F
MPU
DISPLAY DRIVER
FIP DISPLAY
ROM
RAM
KEY MATRIX
CTL TO SYSTEM CONTROL
SERVO (W5)
FG DIV
MPX
SPEED CONTROL
SYNCRO
MOTOR DRIVER
FG
CAPSTAN MOTOR
CTL GATE TO SYSTEM CONTROL(B1)
PHASE CONTROL
PB AMP
CTL RECOVER CIRCUIT
SERIAL DATA FROM SYSTEM CONTROL(B1)
MODE CONTROL
MOTOR DRIVER
DRUM MOTOR
FG
PG
FG DIV
SPEED CONTROL
D/A CONV
PHASE DET
PHASE CONTROL
D/A CONV
(HEAD SW)
(R/E CONTROL)
(Y.C REC SW)
TIMING GEN
S. TENSION SENSOR
T. TENSION SENSOR
S.TENSION CONTROL
T.TENSION CONTROL
MOTOR DRIVE
MOTOR DRIVE
SUPPLY REEL
TAKE UP REEL
SERIAL DATA FROM SYSTEM CONTROL(B1)
MODE CONTROL
SPEED CONTROL
TIMER ROLLER
FG

W1 (TBC & SYNC GEN) BLOCK DIAGRAM 1/3 (TBC SECTION)[FOR AU-65,AU-63,AU-62]

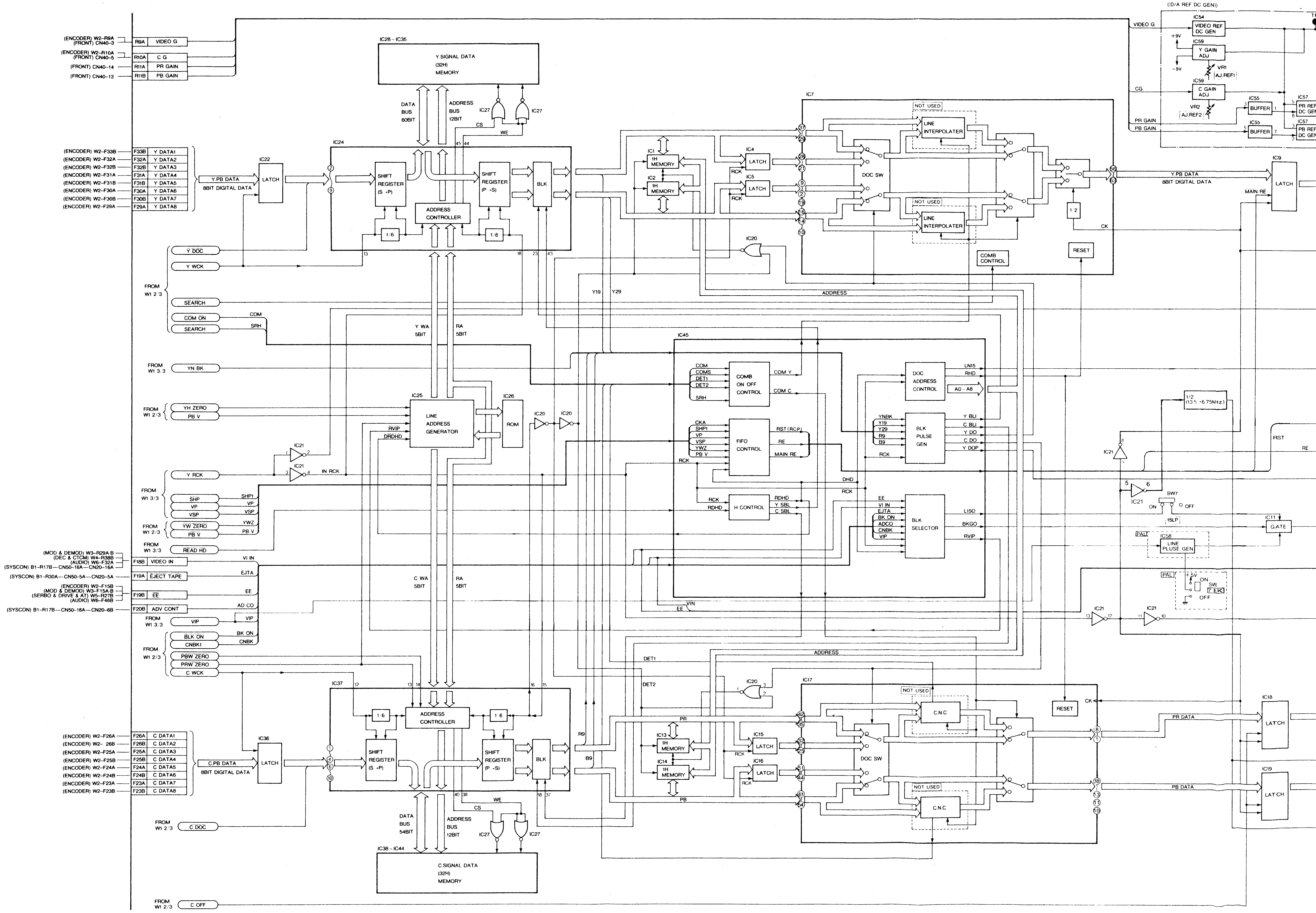

(ENCODER) W2–R9A
(FRONT) CN40–3
R9A VIDEO G
(ENCODER) W2–R10A
(FRONT) CN40–5
R10A C G
(FRONT) CN40–14
R11A PR GAIN
(FRONT) CN40–13
R11B PB GAIN
(ENCODER) W2–F33B
F33B Y DATA1
(ENCODER) W2–F32A
F32A Y DATA2
(ENCODER) W2–F32B
F32B Y DATA3
(ENCODER) W2–F31A
F31A Y DATA4
(ENCODER) W2–F31B
F31B Y DATA5
(ENCODER) W2–F30A
F30A Y DATA6
(ENCODER) W2–F30B
F30B Y DATA7
(ENCODER) W2–F29A
F29A Y DATA8
Y.PB DATA
8BIT DIGITAL DATA
IC22
LATCH
IC28 – IC35
Y.SIGNAL DATA
(32H)
MEMORY
DATA
BUS
60BIT
ADDRESS
BUS
12BIT
IC27
CS
WE
IC24
SHIFT
REGISTER
(S→P)
ADDRESS
CONTROLLER
SHIFT
REGISTER
(P→S)
BLK
1/6
FROM
W1 2/3
Y DOC
Y WCK
SEARCH
COM ON
COM
SRH
Y WA
5BIT
RA
5BIT
FROM
W1 3/3
YN BK
FROM
W1 2/3
YH ZERO
PB V
IC25
LINE
ADDRESS
GENERATOR
RVIP
DRDHD
IC26
ROM
IC20
IC21
Y RCK
IN RCK
FROM
W1 3/3
SHP
VP
VSP
SHP1
FROM
W1 2/3
YW ZERO
PB V
YWZ
FROM
W1 3/3
READ HD
(MOD & DEMOD) W3–R29A·B
(DEC & CTCM) W4–R38B
(AUDIO) W6–F32A
(SYSCON) B1–R17B—CN50–16A—CN20–16A
F18B VIDEO IN
VI IN
(SYSCON) B1–R30A—CN50–5A—CN20–5A
F19A EJECT TAPE
EJTA
(ENCODER) W2–F15B
(MOD & DEMOD) W3–F15A·B
(SERBO & DRIVE & AT) W5–R27B
(AUDIO) W6–F46B
F19B EE
EE
(SYSCON) B1–R17B—CN50–16A—CN20–6B
F20B ADV CONT
AD CO
FROM
W1 3/3
VIP
FROM
W1 2/3
BLK ON
CNBK1
BK ON
CNBK
PBW ZERO
PRW ZERO
C WCK
C WA
5BIT
RA
5BIT
IC37
ADDRESS
CONTROLLER
SHIFT
REGISTER
(S→P)
SHIFT
REGISTER
(P→S)
BLK
(ENCODER) W2–F26A
F26A C DATA1
(ENCODER) W2– 26B
F26B C DATA2
(ENCODER) W2–F25A
F25A C DATA3
(ENCODER) W2–F25B
F25B C DATA4
(ENCODER) W2–F24A
F24A C DATA5
(ENCODER) W2–F24B
F24B C DATA6
(ENCODER) W2–F23A
F23A C DATA7
(ENCODER) W2–F23B
F23B C DATA8
C.PB DATA
8BIT DIGITAL DATA
IC36
LATCH
FROM
W1 2/3
C DOC
DATA
BUS
54BIT
ADDRESS
BUS
12BIT
IC38 – IC44
C.SIGNAL DATA
(32H)
MEMORY
FROM
W1 2/3
C OFF
Y19
Y29
IC1
1H
MEMORY
IC2
1H
MEMORY
IC4
LATCH
IC5
LATCH
RCK
IC7
NOT USED
LINE
INTERPOLATER
DOC SW
1/2
CK
RESET
COMB
CONTROL
IC20
ADDRESS
Y.PB DATA
8BIT DIGITAL DATA
MAIN RE
IC9
LATCH
IC45
COM
COMS
DET1
DET2
SRH
COMB
ON OFF
CONTROL
COM Y
COM C
CKA
SHP1
VP
VSP
YWZ
PB V
FIFO
CONTROL
RST(RCP)
RE
MAIN RE
RCK
RDHD
H CONTROL
RDHD
Y SBL
C SBL
DOC
ADDRESS
CONTROL
LN15
RHD
A0 – A8
YNBK
Y19
Y29
R9
B9
BLK
PULSE
GEN
Y BLI
C BLI
Y DO
C DO
Y DOP
DHD
EE
VI IN
EJTA
BK ON
ADCO
CNBK
VIP
BLK
SELECTOR
L15O
BKGO
RVIP
VIN
EE
DET1
DET2
ADDRESS
R9
B9
PR
PB
IC13
1H
MEMORY
IC14
1H
MEMORY
IC15
LATCH
IC16
LATCH
IC17
NOT USED
C.N.C
DOC SW
RESET
CK
PR DATA
PB DATA
IC18
LATCH
IC19
LATCH
(D/A REF DC GEN)
VIDEO G
IC54
VIDEO REF
DC GEN
+9V
IC59
Y GAIN
ADJ
−9V
VR1
AJ.REF1
CG
IC59
C GAIN
ADJ
VR2
AJ.REF2
PR GAIN
PB GAIN
IC55
BUFFER
IC57
PR REF
DC GEN
PB REF
DC GEN
1/2
(13.5→6.75MHz)
RST
RE
IC21
ON
SW7
OFF
15LP
IC11
GATE
PAL
IC58
LINE
PLUSE GEN
+5V
ON
SW
7.EK
OFF

.OCK DIAGRAM 1/3 (TBC SECTION)[FOR AU-65,AU-63,AU-62]

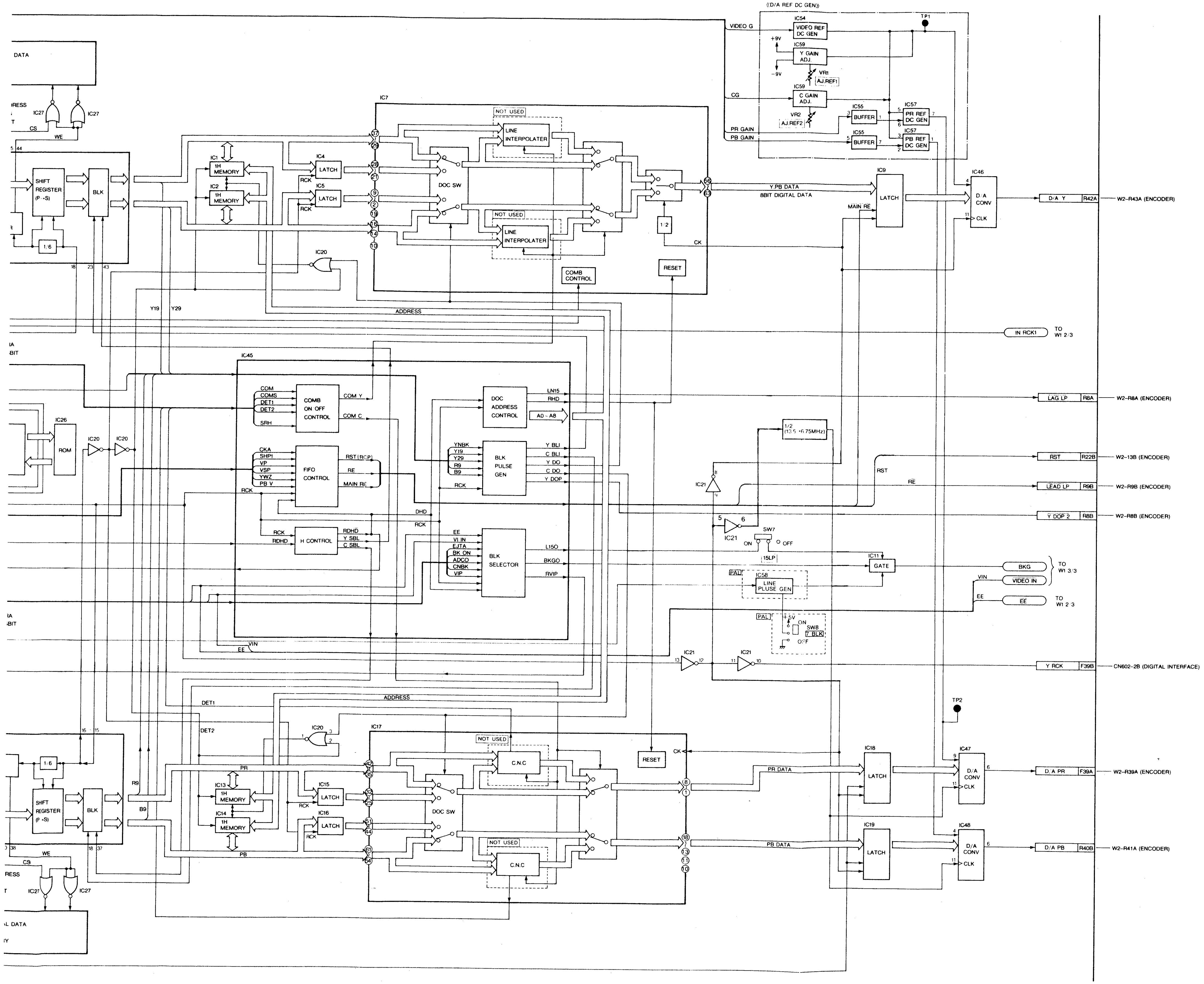
DATA
)RESS
T
IC27
IC27
CS
WE
5 44
SHIFT REGISTER (P→S)
BLK
1/6
18 23 43
IC7
IC1 1H MEMORY
IC2 1H MEMORY
IC4 LATCH
IC5 LATCH
RCK
IC20
37 29 28 21 9 2 19 16 14 10
NOT USED
LINE INTERPOLATER
DOC SW
1/2
CK
COMB CONTROL
RESET
56 63
Y.PB DATA
8BIT DIGITAL DATA
《D/A REF DC GEN》
VIDEO G
IC54 VIDEO REF DC GEN
+9V
-9V
IC59 Y GAIN ADJ.
VR1 AJ.REF1
CG
IC59 C GAIN ADJ.
VR2 AJ.REF2
PR GAIN
PB GAIN
IC55 BUFFER
IC57 PR REF DC GEN
IC57 PB REF DC GEN
TP1
IC9 LATCH
MAIN RE
IC46 D/A CONV CLK
D/A Y R42A
W2-R43A (ENCODER)
Y19 Y29
ADDRESS
IN RCK1
TO W1 2/3
IA
BIT
IC45
COM COMS DET1 DET2 SRH
COMB ON OFF CONTROL
COM Y
COM C
DOC ADDRESS CONTROL
LN15 RHD
A0 ~ A8
IC26 ROM
IC20
CKA SHP1 VP VSP YWZ PB V
FIFO CONTROL
RST(RCP)
RE
MAIN RE
YNBK Y19 Y29 R9 B9
BLK PULSE GEN
Y BLI C BLI Y DO C DO Y DOP
RCK
DHD
RCK
RDHD
H CONTROL
RDHD Y SBL C SBL
EE VI IN EJTA BK ON ADCO CNBK VIP
BLK SELECTOR
L15O BKGO RVIP
1/2 (13.5→6.75MHz)
IC21
LAG LP R8A
W2-R8A (ENCODER)
RST
RST R22B
W2-13B (ENCODER)
RE
LEAD LP R9B
W2-R9B (ENCODER)
Y DOP 2 R8B
W2-R8B (ENCODER)
5 6
SW7 ON OFF
15LP
IC11 GATE
PAL IC58 LINE PLUSE GEN
BKG
VIN
VIDEO IN
TO W1 3/3
EE
EE
TO W1 2/3
PAL +5V ON SW8 7 BLK OFF
RA
BIT
VIN
EE
IC21 13 12
IC21 11 10
Y RCK F39B
CN602-2B (DIGITAL INTERFACE)
TP2
DET1
DET2
ADDRESS
IC20 1 2 3
IC17
16 15
1/6
SHIFT REGISTER (P→S)
BLK
R9
B9
PR
IC13 1H MEMORY
IC14 1H MEMORY
IC15 LATCH
IC16 LATCH
RCK
42 35 32 25 51 44 61 54
NOT USED
C.N.C
DOC SW
RESET
CK
8 1 18 13 11 10
PR DATA
PB DATA
IC18 LATCH
IC19 LATCH
IC47 D/A CONV CLK
IC48 D/A CONV CLK
D/A PR F39A
W2-R39A (ENCODER)
D/A PB R40B
W2-R41A (ENCODER)
38
WE
CS
RESS
T
IC27
IC27
18 37
L DATA
Y

IC45 (μPD65013FA44)

PIN NO.	PIN NAME	IN/ OUT	DESCRIPTION
1	COM	IN	
2	COMS	IN	
3	DET1	IN	
4	DET2	IN	
5	CNC	IN	
6	SRH	IN	
7	PAL	IN	PAL Ⓛ
8	COMY	OUT	Y COM "ON" Ⓛ
9	COMC	OUT	C COM "ON" Ⓛ
11	CKA	IN	CLOK A (=CK1 13.5MHz)
12	SHP1	IN	SAMPLE HOLD PULSE FOR CK1
13	VP	IN	VERTICAL PULSE OF VIDEO OUT
14	VSP	IN	2 FH PULSE OF VIDEO OUT
16	YWZ	IN	Y WRITE ZERO (START PULSE)
17	PBV	IN	TIMING PULE FOR WRITING MEMORY
19	RCP	OUT	READED SIGNAL CLAMP PULSE (FOR ENCODER)
20	RST	OUT	RE SE T PULSE READING FIFO
21	RE	OUT	READ ENABLE PULSE FOR READING FIFO
22	WE	OUT	WRITE ENABLE PULSE FOR WRITING FIFO
23	MRE	OUT	VIDEO DATA TO D/A Ⓛ
24	RCK	IN	READ CLOCK
25	RDHD	IN	HD PULSE FOR READ ADDRESS
26	MDC1	IN	MODE SW FOR RDHD DELAY TIME
27	MDC2	IN	MODE SW FOR RDHD DELAY TIME
28	YSBL	OUT	Y SERIAL BLANKING DATA
29	CSBL	OUT	C SERIAL BLANKING DATA
30	EHDO	OUT	DELAYED RDHD
31	EHDI	IN	EHDO INPUT
32	DHDO	OUT	DELAYED EHDO (MEMORY REFERENCE HD)
33	DHDI	IN	DHDO INPUT
34	CKO	IN	6.75 MHz
35	LN15	OUT	NTSC15 LINE, PAL 12 LINE
36	RHD	OUT	RESET SIGNAL
37	A0	OUT	ADDRESS FOR 1H MEMORY
38	A1	OUT	ADDRESS FOR 1H MEMORY
39	A2	OUT	ADDRESS FOR 1H MEMORY
42	A3	OUT	ADDRESS FOR 1H MEMORY
43	A4	OUT	ADDRESS FOR 1H MEMORY
44	A5	OUT	ADDRESS FOR 1H MEMORY
45	A6	OUT	ADDRESS FOR 1H MEMORY
46	A7	OUT	ADDRESS FOR 1H MEMORY

PIN NO.	PIN NAME	IN/ OUT	DESCRIPTION
47	A8	OUT	ADDRESS FOR 1H MEMO
48	EE	IN	E-E MODE Ⓛ
49	VIIN	IN	VIDEO SIGNAL IN Ⓛ
50	EJTA	IN	TAPE MODE AND EJECT
51	BKON	IN	R/P HEAD SEARCH Ⓛ
52	ADCO	IN	E-E MODE V=REF Ⓗ, V=INCOM Ⓛ
53	CNBK	IN	C NARRON DIGITAL BLAN PULSE
54	VIP	IN	READ ADDRESS TIMING
55	MMY	IN/ OUT	Y MONOSCALE MULTIVIBR CONTROL
72	RVIP	OUT	READ ADDRESS TIMING
73	BKGO	OUT	V BLANKING DATA OUTP
74	BKGI	IN	V BLANKING PULSE BY B
75	MDB1	IN	MODE SW FOR YNBK DE TIME
76	MDB2	IN	MODE SW FOR YNBK DE TIME
77	MDA1	IN	MODE SW FOR BKGI DEL TIME
78	MDA2	IN	MODE SW FOR BKGI DEL TIME
79	MDB3	IN	MODE SW FOR YNBK DE TIME
80	YDOP	OUT	Y DROP OUT PULSE (FOR ENCODER)
81	Y19	IN	Y PARALLEL DATA OF DF OUT PULSE
82	Y29	IN	Y PARALLEL DATA OF DF OUT PULSE
83	R9	IN	C PARALLEL DATA OF DF OUT PULSE
84	B9	IN	C PARALLEL DATA OF DF OUT PULSE
85	YMMO	OUT	WIDEND YDO OUTPUT
86	YMMI	IN	WIDEND YDO INPUT
87	CMMO	OUT	WIDEND CDO OUTPUT
88	CMMI	IN	WIDEND CDO INPUT
89	YBLI	OUT	Y BLANKING PULSE
92	CBLI	OUT	C BLANKING PULSE
93	YDO	OUT	Y DROP OUT SIGNAL
94	CDO	OUT	C DROP OUT SIGNAL
95	L150	OUT	NISC 15 LINE PAL 12 LINE OUTPUT
96	L15I	IN	NISC 15 LINE PAL 12 LINE OUTPUT
97	YNBK	IN	Y NARROW DIGITAL BLAN PULSE
99	MMC	IN/ OUT	C MONOSTABLE MULTIVIB CONTROL

IC479 《APC》

PIN NO.	PIN NAME	IN/ OUT	DESCRIPTION
1	CMST	IN	C MONOMULTI START
2	CWST	IN	C WRIGHT START
3	YWST	IN	Y WRIGHT START
4	YMST	IN	Y MONOMULTI START
5	————	—	
6	GND	—	
7	CK54	IN	CLOCK 54MHz
10	YTP	OUT	Y TEST POINT
11	CTP	OUT	C TEST POINT
12	YWCK	OUT	Y WRIGHT CLOCK
17	GND	—	
18	NTCL	IN	NTSC LOW (PAL HIGH)
22	CWCK	OUT	C WRIGHT CLOCK
23	CAPS	OUT	C APC START
24	YAPS	OUT	Y APC START
25	VPH1	IN	VIDEO PHASE 1
26	VPH2	IN	VIDEO PHASE 2

W1 (TBC & SYNC GEN) BLOCK DIAGRAM 2/3 (WRITE CLOCK GEN SECTION

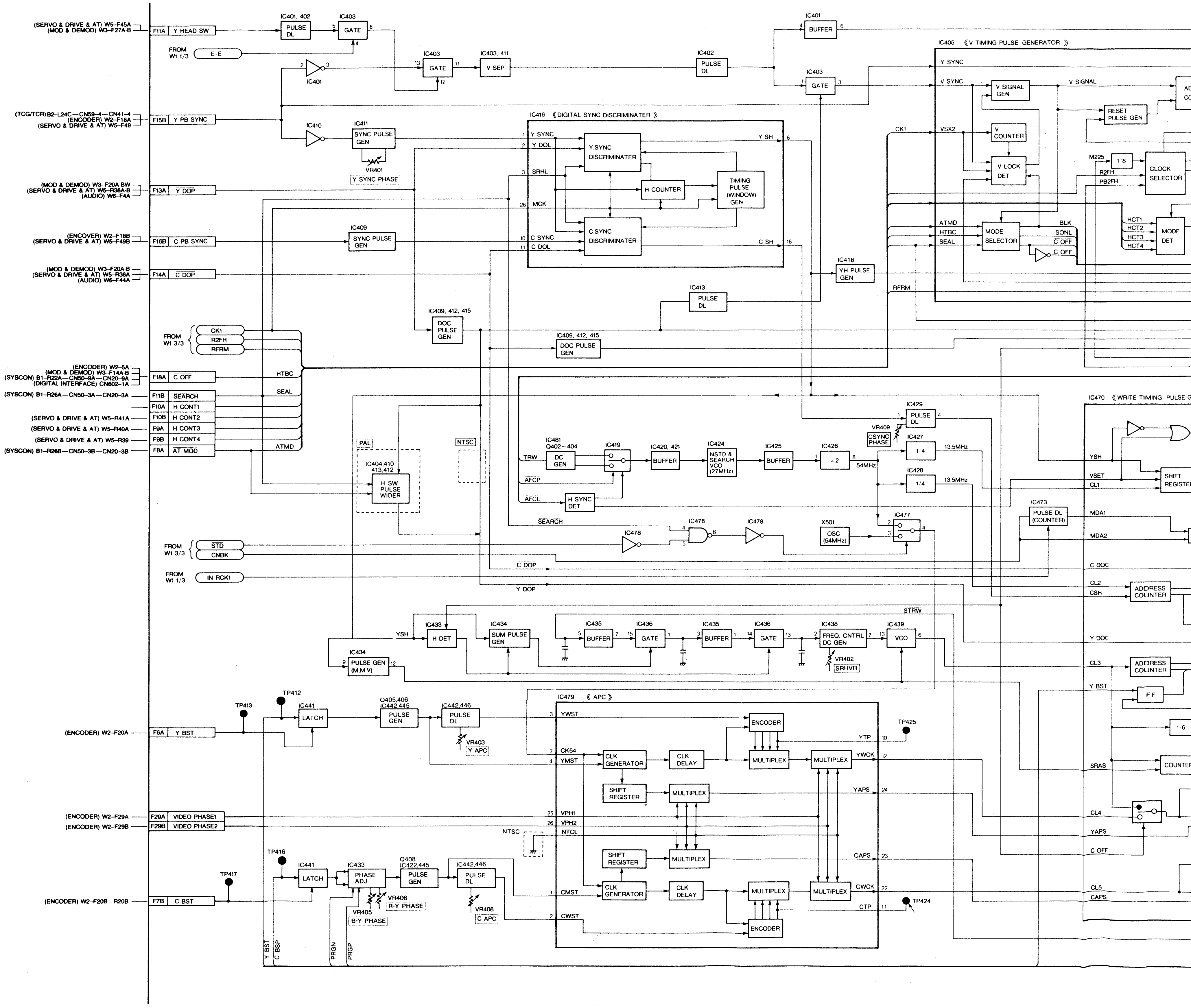

(SERVO & DRIVE & AT) W5-F45A
(MOD & DEMOD) W3-F27A·B
F11A Y HEAD SW
FROM W1 1/3 E E
IC401, 402 PULSE DL
IC403 GATE
IC401
IC403 GATE
IC403, 411 V SEP
IC402 PULSE DL
IC401 BUFFER
IC403 GATE
(TCG/TCR) B2-L24C—CN59-4—CN41-4
(ENCODER) W2-F18A
(SERVO & DRIVE & AT) W5-F49
F15B Y PB SYNC
IC410
IC411 SYNC PULSE GEN
VR401 Y SYNC PHASE
IC416 《DIGITAL SYNC DISCRIMINATER》
Y SYNC
Y DOL
SRHL
MCK
C SYNC
C DOL
Y.SYNC DISCRIMINATER
H COUNTER
TIMING PULSE (WINDOW) GEN
C.SYNC DISCRIMINATER
Y SH
C SH
(MOD & DEMOD) W3-F20A·BW
(SERVO & DRIVE & AT) W5-R38A·B
(AUDIO) W6-F4A
F13A Y DOP
(ENCOVER) W2-F18B
(SERVO & DRIVE & AT) W5-F49B
F16B C PB SYNC
IC409 SYNC PULSE GEN
(MOD & DEMOD) W3-F20A·B
(SERVO & DRIVE & AT) W5-R38A
(AUDIO) W6-F44A
F14A C DOP
IC413 PULSE DL
IC418 YH PULSE GEN
FROM W1 3/3 CK1 R2FH RFRM
IC409, 412, 415 DOC PULSE GEN
IC409, 412, 415 DOC PULSE GEN
(ENCODER) W2-5A
(MOD & DEMOD) W3-F14A·B
(SYSCON) B1-R22A—CN50-9A—CN20-9A
(DIGITAL INTERFACE) CN602-1A
F18A C OFF
(SYSCON) B1-R26A—CN50-3A—CN20-3A
F11B SEARCH
F10A H CONT1
(SERVO & DRIVE & AT) W5-R41A
F10B H CONT2
(SERVO & DRIVE & AT) W5-R40A
F9A H CONT3
(SERVO & DRIVE & AT) W5-R39
F9B H CONT4
(SYSCON) B1-R26B—CN50-3B—CN20-3B
F8A AT MOD
HTBC
SEAL
ATMD
PAL
NTSC
IC404, 410 413, 412 H SW PULSE WIDER
IC481 Q402~404 DC GEN
IC419
IC420, 421 BUFFER
IC424 NSTD & SEARCH VCO (27MHz)
IC425 BUFFER
IC426 ×2
54MHz
IC429 PULSE DL
VR409 CSYNC PHASE
IC427 1/4 13.5MHz
IC428 1/4 13.5MHz
TRW
AFCP
AFCL
H SYNC DET
SEARCH
IC478
IC478
IC478
X501 OSC (54MHz)
IC477
IC473 PULSE DL (COUNTER)
FROM W1 3/3 STD CNBK
FROM W1 1/3 IN RCK1
C DOP
Y DOP
STRW
YSH
IC433 H DET
IC434 SUM PULSE GEN
IC435 BUFFER
IC436 GATE
IC435 BUFFER
IC436 GATE
IC438 FREQ. CNTRL DC GEN
VR402 SRHVR
IC439 VCO
IC434 PULSE GEN (M.M.V)
TP412
TP413
IC441 LATCH
Q405,406 IC442,445 PULSE GEN
IC442,446 PULSE DL
VR403 Y APC
(ENCODER) W2-F20A
F6A Y BST
IC479 《APC》
YWST
CK54
YMST
VPH1
VPH2
NTCL
CMST
CWST
CLK GENERATOR
CLK DELAY
SHIFT REGISTER
MULTIPLEX
ENCODER
YTP
YWCK
YAPS
CAPS
CWCK
CTP
TP425
TP424
(ENCODER) W2-F29A
(ENCODER) W2-F29B
F29A VIDEO PHASE1
F29B VIDEO PHASE2
NTSC
TP416
TP417
(ENCODER) W2-F20B R20B
F7B C BST
IC441 LATCH
IC433 PHASE ADJ
VR405 B-Y PHASE
Q408 IC422,445 PULSE GEN
VR406 R-Y PHASE
IC442,446 PULSE DL
VR408 C APC
Y BST
C BSP
PRGN
PRGP
IC405 《V TIMING PULSE GENERATOR》
Y SYNC
V SYNC
V SIGNAL GEN
V SIGNAL
RESET PULSE GEN
V COUNTER
VSX2
CK1
V LOCK DET
M225
1/8
R2FH
PB2FH
CLOCK SELECTOR
ATMD
HTBC
SEAL
MODE SELECTOR
BLK
SONL
C OFF
C OFF
HCT1
HCT2
HCT3
HCT4
MODE DET
RFRM
IC470 《WRITE TIMING PULSE G
YSH
VSET
CL1
SHIFT REGISTER
MDA1
MDA2
C DOC
CL2
CSH
ADDRESS COUNTER
Y DOC
CL3
ADDRESS COUNTER
Y BST
F.F
1/6
SRAS
COUNTER
CL4
YAPS
C OFF
CL5
CAPS

(TBC & SYNC GEN) BLOCK DIAGRAM 2/3 (WRITE CLOCK GEN SECTION)[FOR AU-65,AU-63,AU-62]

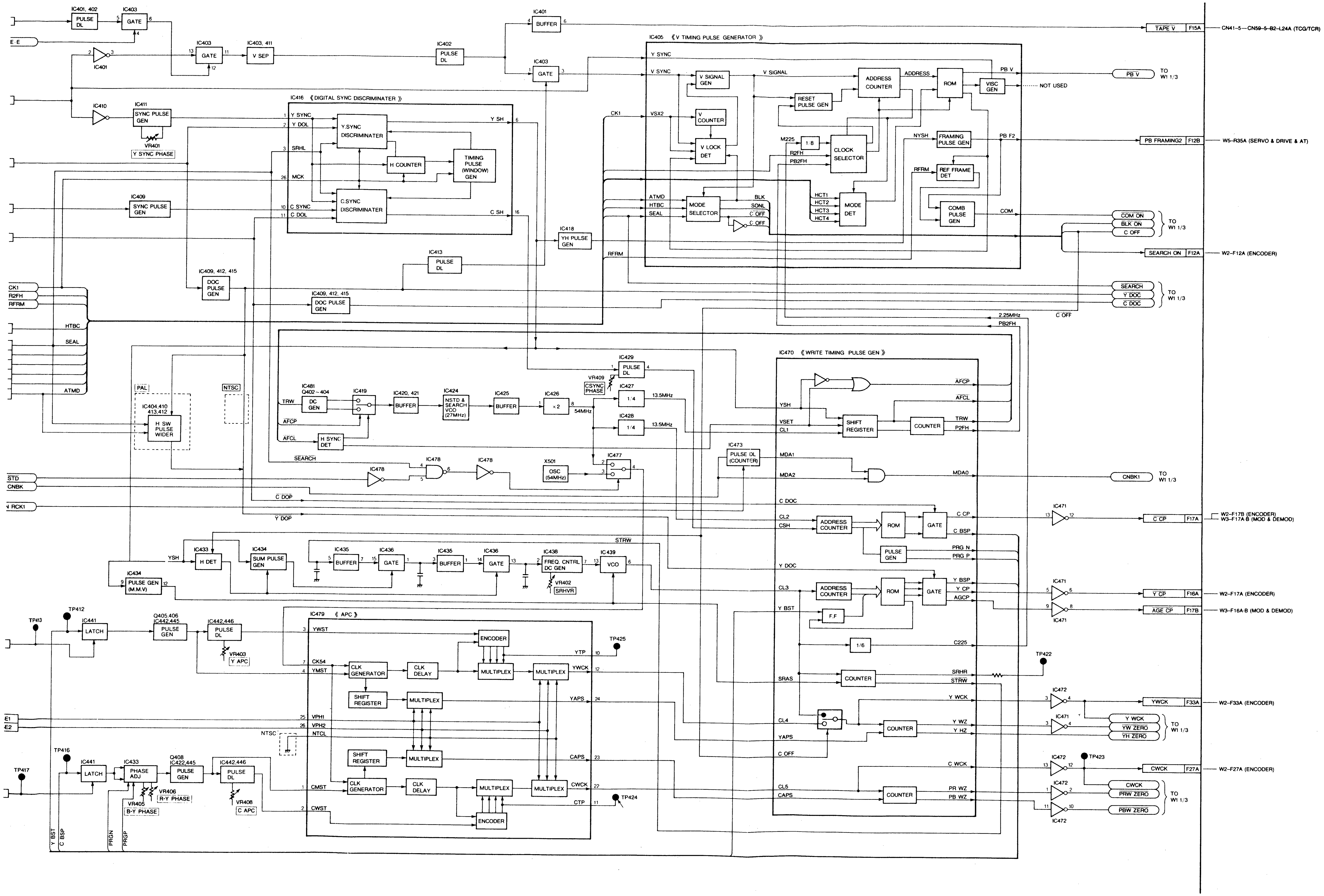

IC401, 402
PULSE DL
IC403
GATE
IC401
IC403
GATE
IC403, 411
V SEP
IC402
PULSE DL
IC401
BUFFER
IC403
GATE
IC410
IC411
SYNC PULSE GEN
VR401
Y SYNC PHASE
IC409
SYNC PULSE GEN
IC416 《DIGITAL SYNC DISCRIMINATER》
Y SYNC
Y DOL
SRHL
MCK
C SYNC
C DOL
Y.SYNC DISCRIMINATER
H COUNTER
TIMING PULSE (WINDOW) GEN
C.SYNC DISCRIMINATER
Y SH
C SH
IC418
YH PULSE GEN
IC413
PULSE DL
IC409, 412, 415
DOC PULSE GEN
IC409, 412, 415
DOC PULSE GEN
CK1
R2FH
RFRM
HTBC
SEAL
ATMD
IC405 《V TIMING PULSE GENERATOR》
Y SYNC
V SYNC
V SIGNAL GEN
V SIGNAL
ADDRESS COUNTER
ADDRESS
ROM
VISC GEN
PB V
NOT USED
RESET PULSE GEN
VSX2
V COUNTER
V LOCK DET
M225
1/8
R2FH
PB2FH
CLOCK SELECTOR
NYSH
FRAMING PULSE GEN
PB F2
RFRM
REF FRAME DET
ATMD
HTBC
SEAL
MODE SELECTOR
BLK
SONL
C OFF
C OFF
HCT1
HCT2
HCT3
HCT4
MODE DET
COMB PULSE GEN
COM
TAPE V
F15A
CN41-5—CN59-5-B2-L24A (TCG/TCR)
PB V
TO W1 1/3
PB FRAMING2
F12B
W5-R35A (SERVO & DRIVE & AT)
COM ON
BLK ON
C OFF
TO W1 1/3
SEARCH ON
F12A
W2-F12A (ENCODER)
SEARCH
Y DOC
C DOC
TO W1 1/3
2.25MHz
PB2FH
C OFF
PAL
NTSC
IC404.410 413.412
H SW PULSE WIDER
IC481 Q402~404
TRW
DC GEN
IC419
IC420, 421
BUFFER
IC424
NSTD & SEARCH VCO (27MHz)
IC425
BUFFER
IC426
×2
54MHz
AFCP
AFCL
H SYNC DET
SEARCH
IC478
IC478
IC478
X501
OSC (54MHz)
IC429
PULSE DL
VR409
CSYNC PHASE
IC427
1/4
13.5MHz
IC428
1/4
13.5MHz
IC477
IC473
PULSE DL (COUNTER)
STD
CNBK
RCK1
C DOP
Y DOP
IC470 《WRITE TIMING PULSE GEN》
AFCP
AFCL
YSH
VSET
CL1
SHIFT REGISTER
COUNTER
TRW
P2FH
MDA1
MDA2
MDA0
CNBK1
TO W1 1/3
C DOC
CL2
CSH
ADDRESS COUNTER
ROM
GATE
C CP
C BSP
PULSE GEN
PRG N
PRG P
Y DOC
CL3
ADDRESS COUNTER
ROM
GATE
Y BSP
Y CP
AGCP
Y BST
F.F
1/6
C225
SRAS
COUNTER
SRHR
STRW
Y WCK
CL4
COUNTER
Y WZ
Y HZ
YAPS
C OFF
C WCK
CL5
CAPS
COUNTER
PR WZ
PB WZ
IC471
C CP
F17A
W2-F17B (ENCODER)
W3-F17A·B (MOD & DEMOD)
IC471
Y CP
F16A
W2-F17A (ENCODER)
AGE CP
F17B
W3-F16A·B (MOD & DEMOD)
IC471
TP422
IC472
YWCK
F33A
W2-F33A (ENCODER)
IC471
Y WCK
YW ZERO
YH ZERO
TO W1 1/3
IC472
TP423
CWCK
F27A
W2-F27A (ENCODER)
IC472
CWCK
PRW ZERO
PBW ZERO
TO W1 1/3
IC472
STRW
YSH
IC433
H DET
IC434
SUM PULSE GEN
IC435
BUFFER
IC436
GATE
IC435
BUFFER
IC436
GATE
IC438
FREQ. CNTRL DC GEN
VR402
SRHVR
IC439
VCO
IC434
PULSE GEN (M.M.V)
TP413
TP412
IC441
LATCH
Q405,406 IC442,445
PULSE GEN
IC442,446
PULSE DL
VR403
Y APC
IC479 《APC》
YWST
CK54
YMST
ENCODER
TP425
YTP
CLK GENERATOR
CLK DELAY
MULTIPLEX
MULTIPLEX
YWCK
SHIFT REGISTER
MULTIPLEX
YAPS
VPH1
VPH2
NTSC
NTCL
SHIFT REGISTER
MULTIPLEX
CAPS
TP416
TP417
IC441
LATCH
IC433
PHASE ADJ
Q408 IC422,445
PULSE GEN
IC442,446
PULSE DL
VR405
B-Y PHASE
VR406
R-Y PHASE
VR408
C APC
CMST
CWST
CLK GENERATOR
CLK DELAY
MULTIPLEX
MULTIPLEX
CWCK
CTP
TP424
ENCODER
Y BST
C BSP
PRGN
PRGP

W1 (TBC & SYNC GEN) BLOCK DIAGRAM 3/3 (SYNC GEN SECTION)[FOR AU-65,AU-63,AU-62]

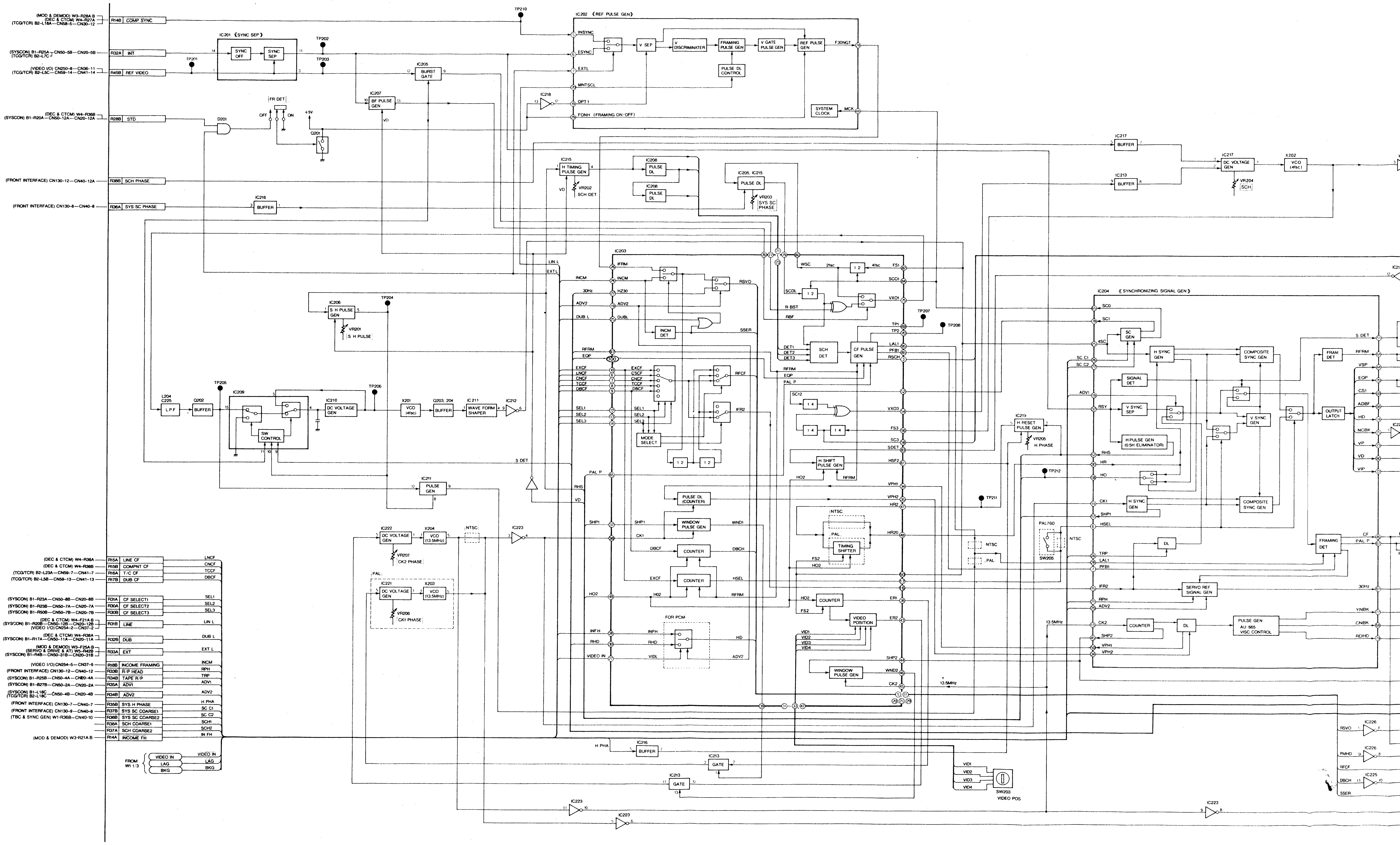
(MOD & DEMOD) W3–R28A·B
(DEC & CTCM) W4–R27A
(TCG/TCR) B2–L18A—CN58–5—CN30–12
R14B COMP SYNC
(SYSCON) B1–R25A—CN50–5B—CN20–5B
(TCG/TCR) B2–L7C
R32A INT
(VIDEO I/O) CN250–8—CN36–11
(TCG/TCR) B2–L5C—CN59–14—CN41–14
R45B REF VIDEO
(DEC & CTCM) W4–R36B
(SYSCON) B1–R20A—CN50–12A—CN20–12A
R28B STD
(FRONT INTERFACE) CN130–12—CN40–12A
R38B SCH PHASE
(FRONT INTERFACE) CN130–8—CN40–8
R36A SYS SC PHASE
IC201 《SYNC SEP》
SYNC OFF
SYNC SEP
TP201
TP202
TP203
D201
FR DET
OFF
ON
+5V
Q201
IC205
BURST GATE
IC207
BF PULSE GEN
VD
TP210
IC202 《REF PULSE GEN》
INSYNC
ESYNC
EXTL
MNTSCL
OPT 1
FONH (FRAMING ON/OFF)
V SEP
V DISCRIMINATER
FRAMING PULSE GEN
V GATE PULSE GEN
REF PULSE GEN
F30NGT
PULSE DL CONTROL
SYSTEM CLOCK
MCK
IC218
IC215
H TIMING PULSE GEN
VR202
SCH DET
IC208
PULSE DL
IC205, IC215
PULSE DL
VR203
SYS SC PHASE
IC216
BUFFER
IC206
S H PULSE GEN
VR201
S H PULSE
TP204
L204
C225
L.P.F
Q202
BUFFER
TP205
IC209
SW CONTROL
IC210
DC VOLTAGE GEN
TP206
X201
VCO (4fsc)
Q203, 204
BUFFER
IC 211
WAVE FORM SHAPER
IC212
S DET
IC211
PULSE GEN
IC222
DC VOLTAGE GEN
X204
VCO (13.5MHz)
VR207
CK2 PHASE
NTSC
PAL
IC221
DC VOLTAGE GEN
X203
VCO (13.5MHz)
VR206
CK1 PHASE
IC223
(DEC & CTCM) W4–R36A
R15A LINE CF
LNCF
(DEC & CTCM) W4–R36B
R15B COMPNT CF
CNCF
(TCG/TCR) B2–L23A—CN59–7—CN41–7
R16A T/C CF
TCCF
(TCG/TCR) B2–L5B—CN59–13—CN41–13
R17B DUB CF
DBCF
(SYSCON) B1–R23A—CN50–8B—CN20–8B
R31A CF SELECT1
SEL1
(SYSCON) B1–R23B—CN50–7A—CN20–7A
R30A CF SELECT2
SEL2
(SYSCON) B1–R50B—CN50–7B—CN20–7B
R30B CF SELECT3
SEL3
(DEC & CTCM) W4–F21A·B
(SYSCON) B1–R20B—CN50–12B—CN20–12B
(VIDEO I/O) CN254–2—CN37–2
R31B LINE
LIN L
(DEC & CTCM) W4–R38A
(SYSCON) B1–R17A—CN50–11A—CN20–11A
R32B DUB
DUB L
(MOD & DEMOD) W3–F25A·B
(SERVO & DRIVE & AT) W5–R42B
(SYSCON) B1–R4B—CN50–31B—CN20–31B
R33A EXT
EXT L
(VIDEO I/O) CN254–5—CN37–5
R18B INCOME FRAMING
INCM
(FRONT INTERFACE) CN130–12—CN40–12
R33B R/P HEAD
RPH
(SYSCON) B1–R25B—CN50–4A—CN20–4A
R34B TAPE R/P
TRP
(SYSCON) B1–B27B—CN50–2A—CN20–2A
R35A ADV1
ADV1
(SYSCON) B1–L18C
(TCG/TCR) B2–L18C
—CN50–4B—CN20–4B
R34B ADV2
ADV2
(FRONT INTERFACE) CN130–7—CN40–7
R35B SYS H PHASE
H PHA
(FRONT INTERFACE) CN130–9—CN40–9
R37B SYS SC COARSE1
SC C1
(TBC & SYNC GEN) W1-R36B—CN40-10
R36B SYS SC COARSE2
SC C2
R38A SCH COARSE1
SCH1
R37A SCH COARSE2
SCH2
(MOD & DEMOD) W3-R21A.B
R14A INCOME FH
IN FH
FROM W1 1/3
VIDEO IN
LAG
BKG
IC203
LIN L
EXT L
IFRM
INCM
30Hz
HZ30
ADV2
DUB L
DUBL
INCM DET
RSVO
SSER
RFRM
EQP
EXCF
LNCF
CSCF
CNCF
TCCF
DBCF
RFCF
SEL1
SEL2
SEL3
IFR2
MODE SELECT
1 2
PAL P
RHS
VD
SHP1
CK1
PULSE DL (COUNTER)
WINDOW PULSE GEN
WND1
COUNTER
DBCH
COUNTER
HSEL
HO2
FOR PCM
INFH
RHD
HD
VIDEO IN
VIDL
ADV2
WSC
2fsc
4fsc
FS1
SCO1
SCDL
VXO1
R BST
RBF
TP1
TP2
TP207
TP208
DET1
DET2
DET3
SCH DET
CF PULSE GEN
LAL1
PFB1
RSCH
SC12
1 4
VXO3
FS3
SC3
SDET
H SHIFT PULSE GEN
HSF2
VPH1
VPH2
HR2
NTSC
PAL
TIMING SHIFTER
HR20
FS2
COUNTER
ER1
VIDEO POSITION
ER2
VID1
VID2
VID3
VID4
SHP2
WINDOW PULSE GEN
WND2
CK2
13.5MHz
H PHA
IC216
BUFFER
IC213
GATE
IC213
GATE
SW203
VIDEO POS
IC223
IC223
IC217
BUFFER
IC213
BUFFER
IC217
DC VOLTAGE GEN
VR204
SCH
X202
VCO (4fsc)
IC219
H RESET PULSE GEN
VR205
H PHASE
TP211
TP212
PAL760
SW205
IC204 《SYNCHRONIZING SIGNAL GEN》
SC0
SC1
4SC
SC GEN
SC C1
SC C2
H SYNC GEN
COMPOSITE SYNC GEN
SIGNAL DET
ADV1
RSY
V SYNC SEP
V SYNC GEN
H.PULSE GEN (0.5H ELIMINATOR)
RHS
HR
HO
CK1
H SYNC GEN
SHP1
HSEL
COMPOSITE SYNC GEN
FRAM DET
OUTPUT LATCH
S DET
RFRM
VSP
EQP
CS1
ADBF
HD
NCBK
VP
VD
VIP
DL
TRP
LAL1
PFB1
IFR2
SERVO REF SIGNAL GEN
RPH
ADV2
CK2
COUNTER
DL
PULSE GEN AU 665 VISC CONTROL
SHP2
VPH1
VPH2
FRAMING DET
CF
PAL P
30Hz
YNBK
CNBK
RDHD
IC226
RSVO
IC226
PMHD
RFCF
IC225
DBCH
SSER
IC223

RAM 3/3 (SYNC GEN SECTION)[FOR AU-65,AU-63,AU-62]

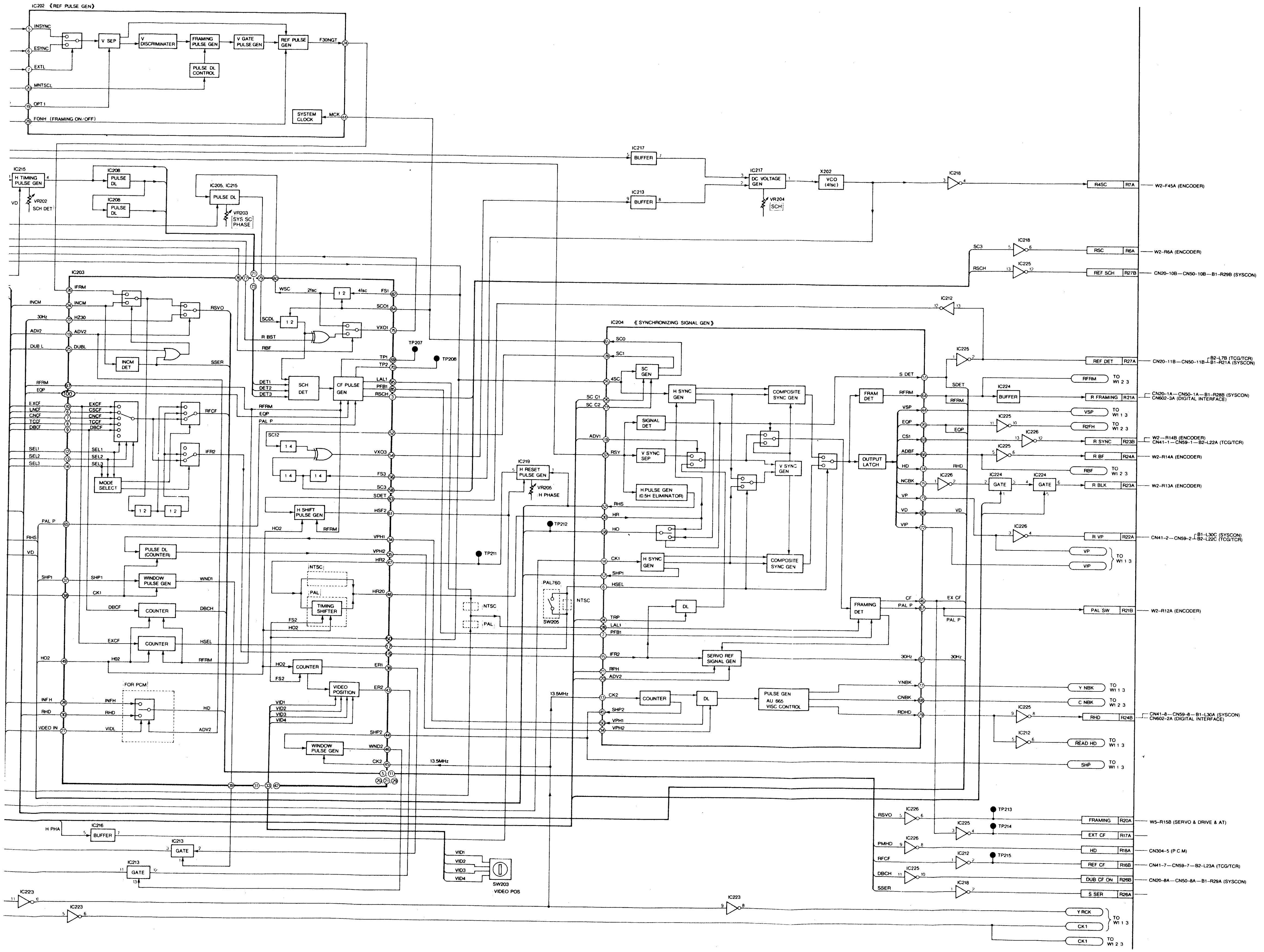
IC202 (REF PULSE GEN)
INSYNC
ESYNC
EXTL
MNTSCL
OPT1
FONH (FRAMING ON/OFF)
V SEP
V DISCRIMINATER
FRAMING PULSE GEN
V GATE PULSE GEN
REF PULSE GEN
F30INGT
PULSE DL CONTROL
SYSTEM CLOCK
MCK
IC215
H TIMING PULSE GEN
VR202 SCH DET
IC208 PULSE DL
IC205, IC215 PULSE DL
VR203 SYS SC PHASE
IC217 BUFFER
IC213 BUFFER
IC217 DC VOLTAGE GEN
VR204 SCH
X202 VCO (4fsc)
IC218
R4SC
R7A
W2-F45A (ENCODER)
IC203
IFRM
INCM
HZ30
ADV2
DUBL
RSVO
SSER
INCM DET
WSC
2fsc
4fsc
FS1
SCO1
VXO1
SCDL
R BST
RBF
TP207
TP208
TP1
TP2
SCH DET
CF PULSE GEN
LAL1
PFB1
RSCH
DET1
DET2
DET3
RFRM
EQP
PAL P
EXCF
CSCF
CNCF
TCCF
DBCF
RFCF
IFR2
SEL1
SEL2
SEL3
MODE SELECT
SC12
VXO3
FS3
SC3
SDET
H SHIFT PULSE GEN
HSF2
HO2
VPH1
VPH2
HR2
PULSE DL (COUNTER)
WINDOW PULSE GEN
WND1
SHP1
CK1
COUNTER
DBCH
HSEL
NTSC
PAL
TIMING SHIFTER
HR20
FS2
ER1
ER2
VIDEO POSITION
FOR PCM
INFH
RHD
VIDEO IN
VIDL
HD
ADV2
VID1
VID2
VID3
VID4
SHP2
WND2
CK2
13.5MHz
WINDOW PULSE GEN
IC219 H RESET PULSE GEN
VR205 H PHASE
TP212
TP211
PAL760
SW205
IC204 (SYNCHRONIZING SIGNAL GEN)
SC0
SC1
4SC
SC GEN
SC C1
SC C2
H SYNC GEN
COMPOSITE SYNC GEN
ADVI
SIGNAL DET
RSY
V SYNC SEP
V SYNC GEN
H PULSE GEN (0.5H ELIMINATOR)
RHS
HR
HO
H SYNC GEN
SHP1
HSEL
TRP
LAL1
PFB1
DL
IFR2
RPH
ADV2
SERVO REF SIGNAL GEN
CK2
COUNTER
SHP2
VPH1
VPH2
PULSE GEN AU 665 VISC CONTROL
FRAM DET
OUTPUT LATCH
FRAMING DET
IC212
IC225
IC224 BUFFER
IC226
GATE
SC3
RSCH
RSC
R6A
W2-R6A (ENCODER)
REF SCH
R27B
CN20-10B—CN50-10B—B1-R29B (SYSCON)
REF DET
R27A
CN20-11B—CN50-11B—B1-R21A (SYSCON)
RFRM
R FRAMING
R21A
CN20-1A—CN50-1A—B1-R28B (SYSCON)
CN602-3A (DIGITAL INTERFACE)
VSP
R2FH
R SYNC
R23B
W2—R14B (ENCODER)
CN41-1—CN59-1—B2-L22A (TCG/TCR)
R BF
R24A
W2-R14A (ENCODER)
RBF
R BLK
R23A
W2-R13A (ENCODER)
R VP
R22A
CN41-2—CN59-2—B2-L22C (TCG/TCR)
VP
VIP
PAL SW
R21B
W2-R12A (ENCODER)
Y NBK
C NBK
RHD
R24B
CN41-8—CN59-8—B1-L30A (SYSCON)
CN602-2A (DIGITAL INTERFACE)
READ HD
SHP
TO W1 2 3
TO W1 1 3
IC223
IC216 BUFFER
H PHA
IC213 GATE
SW203 VIDEO POS
TP213
TP214
TP215
RSVO
FRAMING
R20A
W5-R15B (SERVO & DRIVE & AT)
EXT CF
R17A
PMHD
HD
R18A
CN304-5 (P.C.M)
RFCF
REF CF
R16B
CN41-7—CN59-7—B2-L23A (TCG/TCR)
DBCH
DUB CF ON
R26B
CN20-8A—CN50-8A—B1-R29A (SYSCON)
SSER
S.SER
R26A
Y RCK
CK1

IC203 (μPD65024GF152)

PIN NO.	PIN NAME	IN/ OUT	DESCRIPTION	PIN NO.	PIN NAME	IN/ OUT	DESCRIPT
3	RSCH	OUT	REFERENCE SCH	45	CK2	IN	CLOCK 2
5	DBCH	OUT	DUB COLOR FRAMING IN HIGH	46	WND2	OUT	WINDOW 2
6	OSCF	IN	COMPO SITE COLOR FRAMING	47	HR2	IN	H RESET 2
7	CNCF	IN	COMPONENT COLOR FRAMING (ID PULSE)	48	HR20	OUT	H RESET 2 OUTPUT
8	TCCF	IN	TIME CODE COLOR FRAMING	49	HO2	IN	HO SIGNAL (IC204 5 NO. 2
9	DBCF	IN	DUB COLOR FRAMING	50	FS2	IN	FOUR SUB CARRIEF (4 FSC)
10	EXCF	IN	EXTERNAL COLOR FRAMING				
11	RFCF	OUT	REFERENCE COLOR FRAMING FOR SERVO	52	SCI2	IN	SC1 (IC204 78P) INP
				53	SCH1	IN	SCH COARSE CONT
12	SEL1	IN	COLOR FRAMING SELECTOR SIGNAL	54	VXO3	OUT	CONTROL SIGNAL 3
				55	SCH2	IN	SCH COARSE CONT
13	SEL2	IN	COLOR FRAMING SELECTOR SIGNAL	56	FS3	IN	FOUR SC NO. 3 (4 F
				58	SC3	OUT	SUB CARRIER 3
14	SEL3	IN	COLOR FRAMING SELECTOR SIGNAL	60	SC02	IN	SUB CARRIER O (IC INPUT NO. 2
16	IFR2	OUT	COLOR FRAMING SIGNAL FOR E-E	61	HSF2	OUT	H SHIFT PROTECTIC
19	ADV2	IN	ADVANCE 2	69	TP1	OUT	TEST POINT 1 (FOR
20	RSVO	OUT	REFERENCE FOR SERVO VO (30Hz)	70	TP2	OUT	TEST POINT 2 (FOR
21	SSER	OUT	IMCM SIGNAL (24P) IN Ⓗ	71	DET1	IN	DETECTION FOR SU POLARITY (H TIMING
22	HZ30	IN	30Hz				
24	INCM	IN	INCOME 30Hz	72	DET2	IN	DETECTION FOR SU POLARITY (H TIMING
25	DUBL	IN	DUB LOW				
26	IFRM	IN	INCOME FRAME (REF 30Hz)	73	DET3	IN	DETECTION FOR SU POLARITY (H TIMING
27	VIDL	IN	DELAYED VERTICAL INTERVAL	74	PALP	IN	PAL PULSE
28	INFH	IN	INCOME FRAMING	75	VXO1	OUT	CONTROL SIGNAL 1
29	HD	OUT	HORIZONTAL DRIVE PULSE	76	RBF	IN	REFERENCE VIDEO
30	RHD	IN	HORIZONTAL DRIVE PULSE (=TBC READ TIMING)	77	RBST	IN	REFERENCE VIDEO
				79	SCDL	IN	DELAYED 2FSC
31	VID1	IN	VIDEO φ1	80	WSC	OUT	DOUBLE SUB CARRI
32	VID2	IN	VIDEO φ2	81	SELM	IN	SELECT MODE (NTSC
33	VID3	IN	VIDEO φ3	82	FS1	IN	FOUR SUB CARRIER
34	VPH1	IN	VIDEO PHASE 1	83	SDET	IN	SYNC DETECTION
35	VPH2	OUT	VIDEO PHASE 2	84	SCO1	IN	SUB CARRIER O (IC2 INPUT NO. 1
36	CK1	IN	CLOCK 1				
37	SHP1	IN	SAMPLE HOLD PULSE 1	85	PFB1	OUT	COLOR FRAMING RE (PAL)
38	ER1	OUT	ERROR 1				
39	WND1	OUT	WINDOW 1	95	LAL1	OUT	COLOR FRAMING RE (NTSC)
42	VID4	IN	VIDEO φ4	96	CF1	IN	COLOR FRAMING 1
43	ER2	OUT	ERROR 2	97	RFRM	IN	REFERENCE FRAME
44	SHP	IN	SAMPLE HOLD PULSE 2	100	EQP	IN	EQUALIZING PULSE

IC204 SYNC GEN GATE ARRAY PIN FUNCTION (μPD65040GF144)

PIN NO.	PIN NAME	IN OUT	FUNCTION	PIN NO.	PIN NAME	IN OUT	FUNCTION
1	RST	IN	TEST RESET	41	RHS	OUT	REFERENCE H.SYNC
2	VDD	IN	+5V	42	VDD	IN	+5V
3	GND			43	GND		
4	MODI	IN	[0] NTSC [1] PAL	44	VSP	OUT	V SEPARATION PULSE
5	MOD2	IN	[0] NTSC [1] PAL	45	SHP2	OUT	CK2 SAMPLE & HOLD
6	HSEL	IN	H SYNC SELECT	46	CF	OUT	COLOR FRAMING SIG
7	PFBW	IN	V-BLK SET (NTSC) COLOR FRANING CONT. (PAL)	47	SSEL	IN	HR ADJUST RANGE
				48	CS	OUT	COMPOSITE SYNC
8	LSEL	IN	V-SYNC SELECT	49	LPF1	IN	LPF FOR FRAMING
9	CKSW	IN	VIDEO PHASE CLOCK SELECT	50	VPH1	IN	VIDEO PHASE MMV
10	TST1	IN	TEST CONTROL	51	SDET	OUT	REF SYNC DETECT
11	TST2	IN	TEST CONTROL	52	RHS	OUT	REF H SYNC W/O EQ
12	BDET	IN	BURST DETECT	53	CB	OUT	1 125MHz
13	CK2	IN	13.5MHz CLOCK	54	YB	OUT	2 25MHz
14	CK1	IN	13.5MHz CLOCK	55	CBF	OUT	C BURST FLAG
15	IFR2	IN	INCOME VIDEO FRAMING	56	YBF	OUT	Y BURST FLAG
16	LPF2	IN	LPF FOR FRAMING	57	SHP1	OUT	CK1 SAMPLE & HOLD
17	SSER	IN	SOURCE SEARCH 30Hz SELECT	58	HO	OUT	TRAPEZOIDE H PULSE
18	PINH	IN	VISC CONTROL ON/OFF	59	IFR	OUT	IN VIDEO FRAMING
19	ADV1	IN	ADVANCE 1 FOR V_P SELECT	60	RYS	OUT	R-Y (P_R) SYNC
20	ADV2	IN	ADVANCE 2 FOR 30Hz SELECT	61	30Hz	OUT	SERVO CONTROL 30H
21	RPH	IN	R/P HEAD SELECT	62	GND		
22	GND			63	VDD	IN	+5V
23	VDD	IN	+5V	64	RFRM	OUT	REF FRAMING
24	TRP	IN	TRAPEZOIDE FOR PLL	65	SC0	OUT	SUB CARRIER
26	SCC1	IN	SC PHASE CONTROL	66	ADBF	OUT	ADVANCE BURST FLA
27	SCC2	IN	SC PHASE CONTROL	67	PALP	OUT	PAL PULSE (0 5fH)
28	LAL1	IN	COLOR FRAMING RESET	68	CNBK	OUT	CHROMA DIGITAL BLA
29	IVS	IN	INCOME VIDEO V SYNC	69	CS1	OUT	COMP SYNC
30	HR	IN	H.SYNC RESET	70	EQP	OUT	EQUALIZER PULSE
31	ISY	IN	IN VIDEO COMP SYNC	71	BF	OUT	BURST FLAG
32	RSY	IN	REF VIDEO COMP SYNC	72	VIP	OUT	10 LINE PULSE
33	GND			73	VP	OUT	V PULSE
34	VPH2	IN	VIDEO PHASE MMV	74	HD	OUT	HORIZONTAL DRIVE
35	PST1	IN	VISC CONTROL 90° STEP	75	NCBK	OUT	COMP BLANKING SIGN
36	PST2	IN	VISC CONTROL 90° STEP	76	CBK	OUT	COMP BLANKING SIGN
37	ADS1	IN	ADVANCE SET	77	YNBK	OUT	Y DIGITAL BLANKING
38	ADS2	IN	ADVANCE SET	78	SC1	OUT	SUB CARRIER
39	ADS3	IN	ADVANCE SET	79	RDHD	OUT	TBC READ START
40	ADS4	IN	ADVANCE SET	80	VD	OUT	VERTICAL DRIVE

W1(TBC & SYNC GEN) BLOCK DIAGRAM 1/3 (WRITE CLOCK GEN SECTION) [FOR AU-665 NTSC]

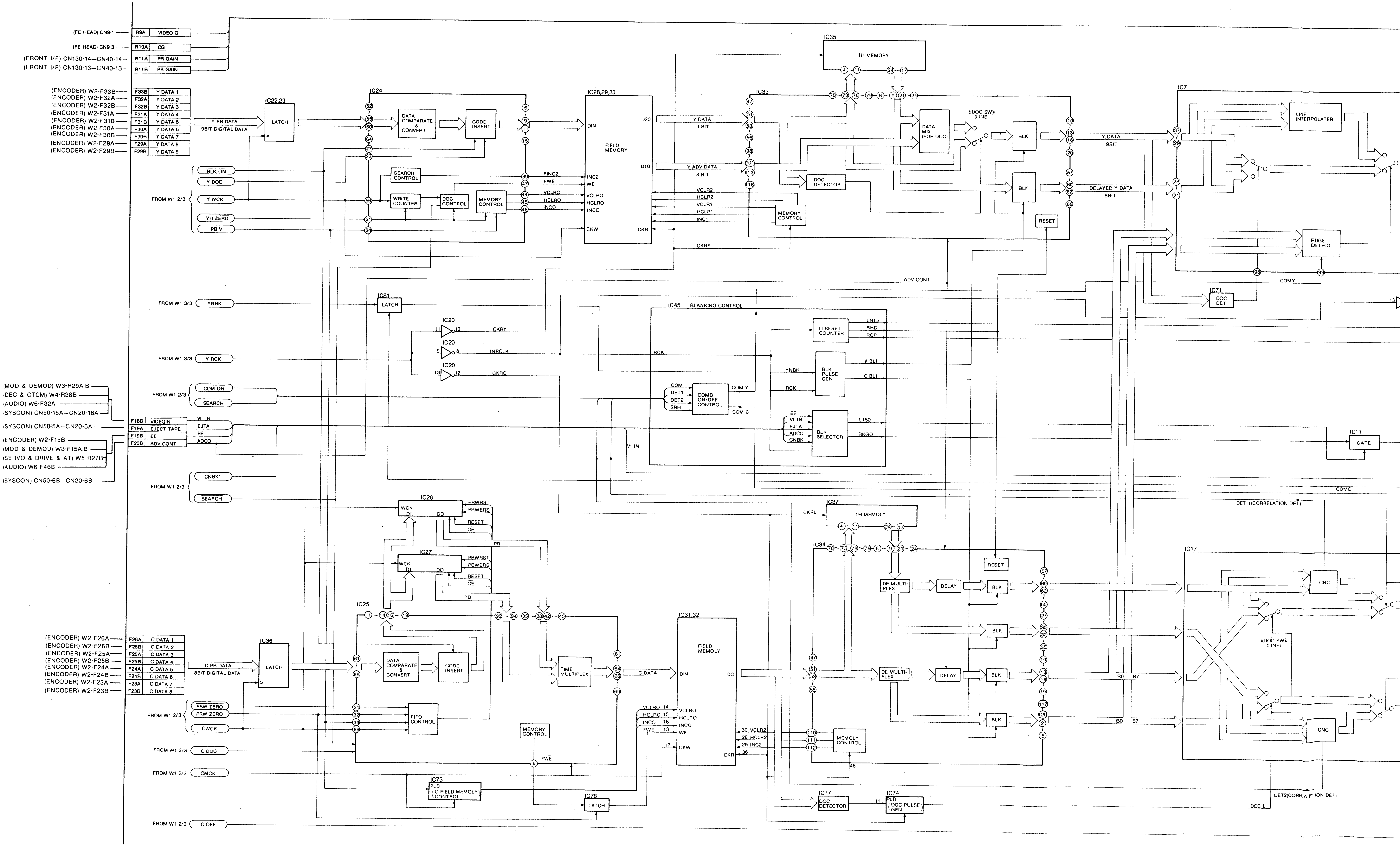

(FE HEAD) CN9-1
R9A
VIDEO G
(FE HEAD) CN9-3
R10A
CG
(FRONT I/F) CN130-14—CN40-14—
R11A
PR GAIN
(FRONT I/F) CN130-13—CN40-13—
R11B
PB GAIN
(ENCODER) W2-F33B
(ENCODER) W2-F32A
(ENCODER) W2-F32B
(ENCODER) W2-F31A
(ENCODER) W2-F31B
(ENCODER) W2-F30A
(ENCODER) W2-F30B
(ENCODER) W2-F29A
(ENCODER) W2-F29B
F33B
F32A
F32B
F31A
F31B
F30A
F30B
F29A
F29B
Y DATA 1
Y DATA 2
Y DATA 3
Y DATA 4
Y DATA 5
Y DATA 6
Y DATA 7
Y DATA 8
Y DATA 9
Y PB DATA
9BIT DIGITAL DATA
IC22,23
LATCH
IC24
DATA COMPARATE & CONVERT
CODE INSERT
SEARCH CONTROL
WRITE COUNTER
DOC CONTROL
MEMORY CONTROL
FROM W1 2/3
BLK ON
Y DOC
Y WCK
YH ZERO
PB V
FINC2
FWE
VCLRO
HCLRO
INCO
IC28,29,30
FIELD MEMORY
DIN
D20
D10
INC2
WE
VCLRO
HCLRO
INCO
CKW
CKR
Y DATA
9 BIT
Y ADV DATA
8 BIT
VCLR2
HCLR2
VCLR1
HCLR1
INC1
CKRY
IC35
1H MEMORY
IC33
DATA MIX (FOR DOC)
(DOC SW) (LINE)
DOC DETECTOR
MEMORY CONTROL
BLK
RESET
Y DATA
9BIT
DELAYED Y DATA
8BIT
IC7
LINE INTERPOLATER
EDGE DETECT
COMY
ADV CON1
IC71
DOC DET
FROM W1 3/3
YNBK
IC81
LATCH
IC20
CKRY
INRCLK
CKRC
FROM W1 3/3
Y RCK
IC45
BLANKING CONTROL
H RESET COUNTER
LN15
RHD
RCP
YNBK
BLK PULSE GEN
Y BLI
C BLI
RCK
COM
DET1
DET2
SRH
COMB ON/OFF CONTROL
COM Y
COM C
EE
VI IN
EJTA
ADCO
CNBK
BLK SELECTOR
L150
BKGO
VI IN
IC11
GATE
COMC
(MOD & DEMOD) W3-R29A B
(DEC & CTCM) W4-R38B
(AUDIO) W6-F32A
(SYSCON) CN50-16A—CN20-16A
(SYSCON) CN50-5A—CN20-5A
(ENCODER) W2-F15B
(MOD & DEMOD) W3-F15A B
(SERVO & DRIVE & AT) W5-R27B
(AUDIO) W6-F46B
(SYSCON) CN50-6B—CN20-6B
FROM W1 2/3
COM ON
SEARCH
F18B
F19A
F19B
F20B
VIDEOIN
EJECT TAPE
EE
ADV CONT
VI IN
EJTA
EE
ADCO
FROM W1 2/3
CNBK1
SEARCH
IC26
WCK
DI
DO
PRWRST
PRWERS
RESET
OE
PR
IC27
PBWRST
PBWERS
RESET
OE
PB
DET 1(CORRELATION DET)
IC37
1H MEMOLY
CKRL
IC34
DE MULTI-PLEX
DELAY
BLK
RESET
IC17
CNC
(DOC SW) (LINE)
R0
R7
B0
B7
IC25
(ENCODER) W2-F26A
(ENCODER) W2-F26B
(ENCODER) W2-F25A
(ENCODER) W2-F25B
(ENCODER) W2-F24A
(ENCODER) W2-F24B
(ENCODER) W2-F23A
(ENCODER) W2-F23B
F26A
F26B
F25A
F25B
F24A
F24B
F23A
F23B
C DATA 1
C DATA 2
C DATA 3
C DATA 4
C DATA 5
C DATA 6
C DATA 7
C DATA 8
C PB DATA
8BIT DIGITAL DATA
IC36
LATCH
DATA COMPARATE & CONVERT
CODE INSERT
TIME MULTIPLEX
C DATA
IC31,32
FIELD MEMOLY
DIN
DO
VCLRO
HCLRO
INCO
WE
CKW
CKR
VCLRO 14
HCLRO 15
INCO 16
FWE 13
17
30 VCLR2
28 HCLR2
29 INC2
36
MEMOLY CONTROL
46
FROM W1 2/3
PBW ZERO
PRW ZERO
CWCK
FIFO CONTROL
MEMORY CONTROL
FWE
FROM W1 2/3
C DOC
FROM W1 2/3
CMCK
IC73
PLD (C FIELD MEMOLY CONTROL)
IC78
LATCH
IC77
DOC DETECTOR
IC74
PLD (DOC PULSE GEN)
DET2(CORRELATION DET)
DOC L
FROM W1 2/3
C OFF

1/3 (WRITE CLOCK GEN SECTION) [FOR AU-665 NTSC]

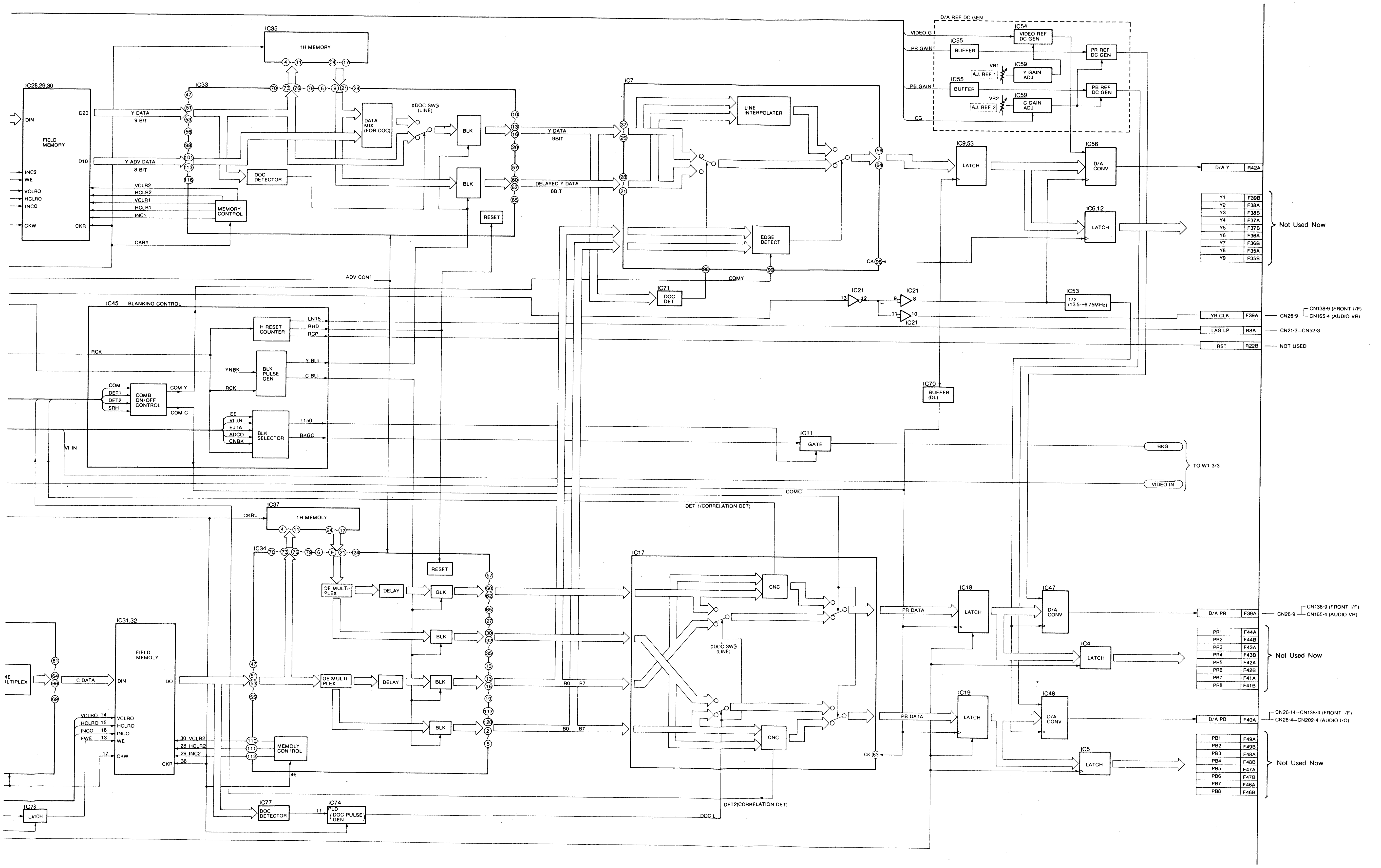
IC28,29,30
FIELD MEMORY
DIN
D20
D10
INC2
WE
VCLRO
HCLRO
INCO
CKW
CKR
Y DATA
9 BIT
Y ADV DATA
8 BIT
VCLR2
HCLR2
VCLR1
HCLR1
INC1
CKRY
IC35
1H MEMORY
IC33
MEMORY CONTROL
DOC DETECTOR
DATA MIX (FOR DOC)
(DOC SW) (LINE)
BLK
RESET
Y DATA
9BIT
DELAYED Y DATA
8BIT
ADV CON1
IC7
LINE INTERPOLATER
EDGE DETECT
CK
COMY
IC71
DOC DET
D/A REF DC GEN
VIDEO G
PR GAIN
PB GAIN
CG
IC55
BUFFER
IC54
VIDEO REF DC GEN
VR1
AJ. REF 1
IC59
Y GAIN ADJ
VR2
AJ. REF 2
C GAIN ADJ
PR REF DC GEN
PB REF DC GEN
IC9,53
LATCH
IC56
D/A CONV
IC6,12
LATCH
IC21
IC53
1/2 (13.5→6.75MHz)
IC70
BUFFER (DL)
IC11
GATE
IC45 BLANKING CONTROL
RCK
H RESET COUNTER
LN15
RHD
RCP
BLK PULSE GEN
YNBK
Y BL1
C BL1
COM
DET1
DET2
SRH
COMB ON/OFF CONTROL
COM Y
COM C
EE
VI IN
EJTA
ADCO
CNBK
BLK SELECTOR
L150
BKGO
VI IN
BKG
VIDEO IN
TO W1 3/3
COMC
DET 1(CORRELATION DET)
CKRL
IC37
1H MEMOLY
IC34
DE MULTIPLEX
DELAY
BLK
RESET
IC17
CNC
(DOC SW) (LINE)
R0 R7
B0 B7
CK
IC18
PR DATA
LATCH
IC47
D/A CONV
IC4
LATCH
IC19
PB DATA
LATCH
IC48
D/A CONV
IC5
LATCH
ME ULTIPLEX
C DATA
IC31,32
FIELD MEMOLY
DIN
DO
VCLRO 14
HCLRO 15
INCO 16
FWE 13
17
VCLRO
HCLRO
INCO
WE
CKW
CKR
30 VCLR2
28 HCLR2
29 INC2
36
MEMOLY CONTROL
46
IC78
LATCH
IC77
DOC DETECTOR
IC74
PLD (DOC PULSE GEN)
DOC L
DET2(CORRELATION DET)
D/A Y R42A
Y1 F39B
Y2 F38A
Y3 F38B
Y4 F37A
Y5 F37B
Y6 F36A
Y7 F36B
Y8 F35A
Y9 F35B
Not Used Now
YR CLK F39A
CN26-9
CN138-9 (FRONT I/F)
CN165-4 (AUDIO VR)
LAG LP R8A
CN21-3—CN52-3
RST R22B
NOT USED
D/A PR F39A
CN26-9
CN138-9 (FRONT I/F)
CN165-4 (AUDIO VR)
PR1 F44A
PR2 F44B
PR3 F43A
PR4 F43B
PR5 F42A
PR6 F42B
PR7 F41A
PR8 F41B
Not Used Now
D/A PB F40A
CN26-14—CN138-4 (FRONT I/F)
CN28-4—CN202-4 (AUDIO I/O)
PB1 F49A
PB2 F49B
PB3 F48A
PB4 F48B
PB5 F47A
PB6 F47B
PB7 F46A
PB8 F46B
Not Used Now

W1(TBC & SYNC GEN) BLOCK DIAGRAM 2/3 (FIELD TBC SECTION) [FOR AU-665 NTSC]

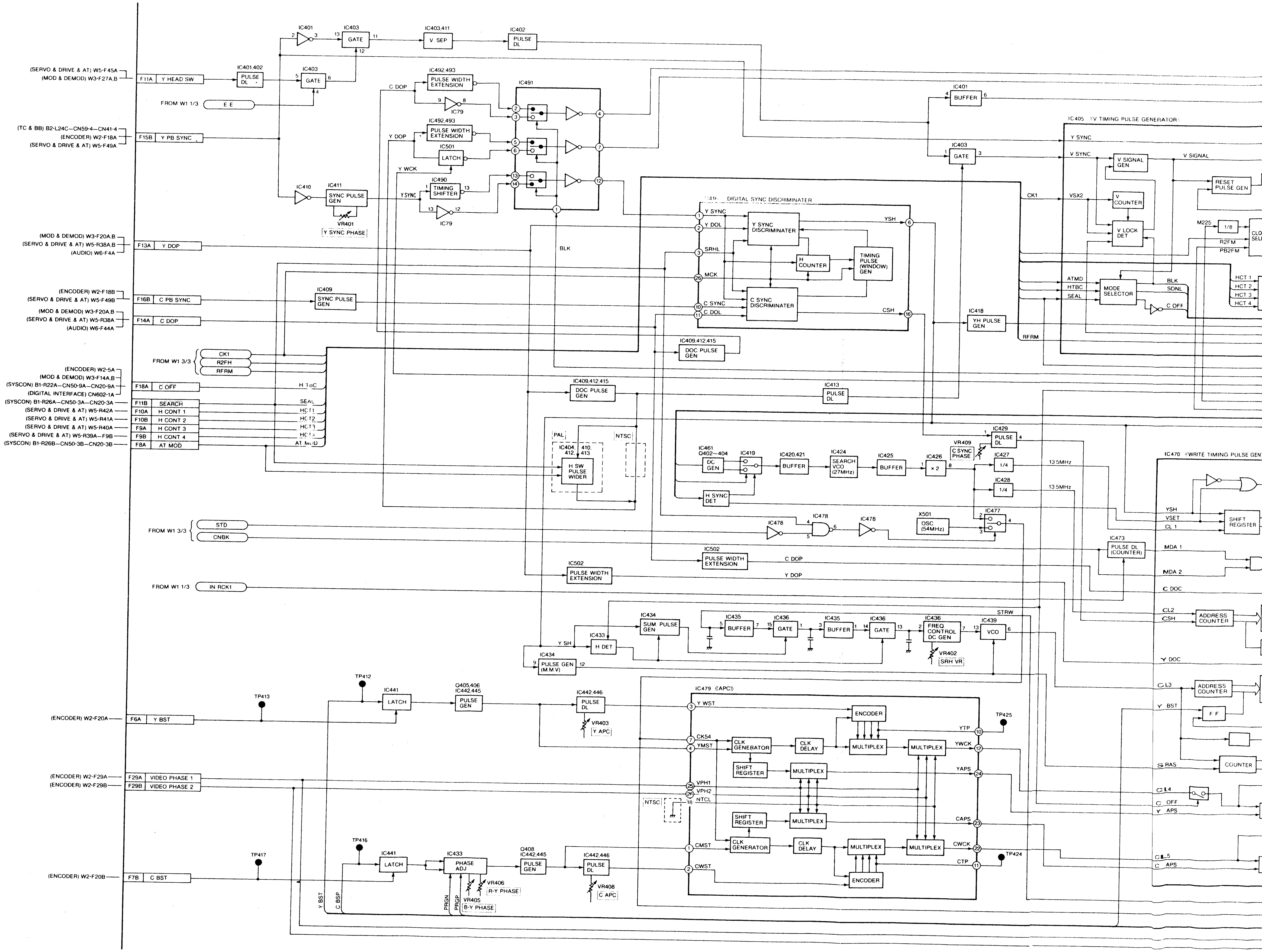
(SERVO & DRIVE & AT) W5-F45A
(MOD & DEMOD) W3-F27A,B
F11A Y HEAD SW
FROM W1 1/3 E E
(TC & BB) B2-L24C—CN59-4—CN41-4
(ENCODER) W2-F18A
(SERVO & DRIVE & AT) W5-F49A
F15B Y PB SYNC
(MOD & DEMOD) W3-F20A,B
(SERVO & DRIVE & AT) W5-R38A,B
(AUDIO) W6-F4A
F13A Y DOP
(ENCODER) W2-F18B
(SERVO & DRIVE & AT) W5-F49B
F16B C PB SYNC
(MOD & DEMOD) W3-F20A,B
(SERVO & DRIVE & AT) W5-R38A
(AUDIO) W6-F44A
F14A C DOP
FROM W1 3/3 CK1 R2FH RFRM
(ENCODER) W2-5A
(MOD & DEMOD) W3-F14A,B
(SYSCON) B1-R22A—CN50-9A—CN20-9A
(DIGITAL INTERFACE) CN602-1A
(SYSCON) B1-R26A—CN50-3A—CN20-3A
(SERVO & DRIVE & AT) W5-R42A
(SERVO & DRIVE & AT) W5-R41A
(SERVO & DRIVE & AT) W5-R40A
(SERVO & DRIVE & AT) W5-R39A—F9B
(SYSCON) B1-R26B—CN50-3B—CN20-3B
F18A C OFF
F11B SEARCH
F10A H CONT 1
F10B H CONT 2
F9A H CONT 3
F9B H CONT 4
F8A AT MOD
FROM W1 3/3 STD CNBK
FROM W1 1/3 IN RCK1
(ENCODER) W2-F20A
F6A Y BST
(ENCODER) W2-F29A
(ENCODER) W2-F29B
F29A VIDEO PHASE 1
F29B VIDEO PHASE 2
(ENCODER) W2-F20B
F7B C BST
IC401
IC403 GATE
IC403,411 V SEP
IC402 PULSE DL
IC401,402 PULSE DL
IC403 GATE
IC492,493 PULSE WIDTH EXTENSION
IC79
IC491
C DOP
Y DOP
IC501 LATCH
Y WCK
IC490 TIMING SHIFTER
Y SYNC
IC410
IC411 SYNC PULSE GEN
VR401 Y SYNC PHASE
BLK
IC409 SYNC PULSE GEN
IC401 BUFFER
IC403 GATE
IC405 V TIMING PULSE GENERATOR
Y SYNC
V SYNC
V SIGNAL GEN
V SIGNAL
RESET PULSE GEN
CK1
VSX2
V COUNTER
V LOCK DET
M225
1/8
R2FM
PB2FM
IC431 DIGITAL SYNC DISCRIMINATER
Y SYNC
Y DOL
SRHL
MCK
C SYNC
C DOL
Y SYNC DISCRIMINATER
H COUNTER
TIMING PULSE (WINDOW) GEN
C SYNC DISCRIMINATER
YSH
CSH
ATMD
HTBC
SEAL
MODE SELECTOR
BLK
SONL
C OFF
HCT 1
HCT 2
HCT 3
HCT 4
IC418 YH PULSE GEN
RFRM
IC409,412,415 DOC PULSE GEN
IC409,412,415 DOC PULSE GEN
IC413 PULSE DL
H.T.OC
SEAL
HCT1
HCT2
HCT3
HCT4
AT MOD
PAL
NTSC
IC404, 410 412, 413
H SW PULSE WIDER
IC461 Q402~404 DC GEN
IC419
IC420,421 BUFFER
IC424 SEARCH VCO (27MHz)
IC425 BUFFER
IC426 ×2
VR409 C SYNC PHASE
IC429 PULSE DL
IC427 1/4
IC428 1/4
13.5MHz
13.5MHz
H SYNC DET
IC478
IC478
IC478
X501 OSC (54MHz)
IC477
IC470 WRITE TIMING PULSE GEN
YSH
VSET
CL 1
SHIFT REGISTER
IC473 PULSE DL (COUNTER)
MDA 1
MDA 2
C DOC
CL2
CSH
ADDRESS COUNTER
Y DOC
IC502 PULSE WIDTH EXTENSION
C DOP
IC502 PULSE WIDTH EXTENSION
Y DOP
IC434 SUM PULSE GEN
IC435 BUFFER
IC436 GATE
IC435 BUFFER
IC436 GATE
IC436 FREQ CONTROL DC GEN
IC439 VCO
STRW
VR402 SRH VR
Y SH
IC433 H DET
IC434 PULSE GEN (M.M.V)
TP412
TP413
IC441 LATCH
Q405,406 IC442,445 PULSE GEN
IC442,446 PULSE DL
VR403 Y APC
IC479 (APC)
Y WST
CK54
YMST
CLK GENERATOR
CLK DELAY
ENCODER
MULTIPLEX
MULTIPLEX
YTP
YWCK
TP425
SHIFT REGISTER
MULTIPLEX
YAPS
VPH1
VPH2
NTCL
NTSC
SHIFT REGISTER
MULTIPLEX
CAPS
CMST
CLK GENERATOR
CLK DELAY
MULTIPLEX
MULTIPLEX
CWCK
TP424
CWST
CTP
ENCODER
CL3
ADDRESS COUNTER
Y BST
F F
S RAS
COUNTER
CL4
C OFF
Y APS
CL5
C APS
TP416
TP417
IC441 LATCH
IC433 PHASE ADJ
VR406 R-Y PHASE
VR405 B-Y PHASE
Q408 IC442,445 PULSE GEN
IC442,446 PULSE DL
VR408 C APC
PRGN
PRGP
Y BST
C BSP

GEN) BLOCK DIAGRAM 2/3 (FIELD TBC SECTION) [FOR AU-665 NTSC]

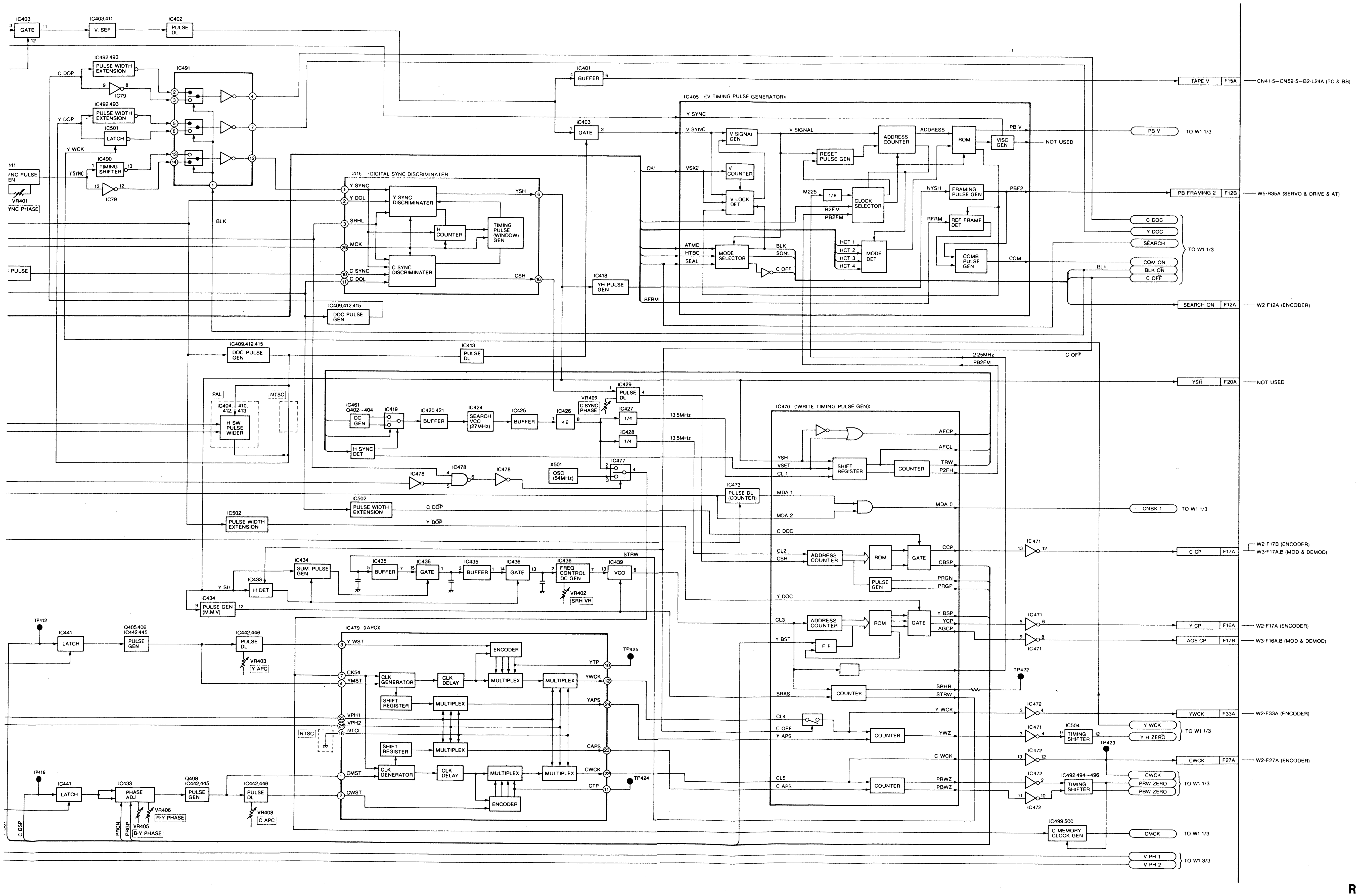
IC403 GATE
IC403,411 V SEP
IC402 PULSE DL
IC492,493 PULSE WIDTH EXTENSION
IC491
C DOP
Y DOP
Y WCK
IC501 LATCH
IC490 TIMING SHIFTER
IC79
SYNC PULSE
VR401 SYNC PHASE
BLK
IC401 BUFFER
IC403 GATE
IC405 (V TIMING PULSE GENERATOR)
Y SYNC
V SYNC
V SIGNAL GEN
V SIGNAL
ADDRESS COUNTER
ADDRESS
ROM
VISC GEN
PB V
NOT USED
RESET PULSE GEN
V COUNTER
V LOCK DET
M225
1/8
CLOCK SELECTOR
R2FM
PB2FM
NYSH
FRAMING PULSE GEN
PBF2
RFRM
REF FRAME DET
HCT 1
HCT 2
HCT 3
HCT 4
MODE DET
COMB PULSE GEN
COM
ATMD
HTBC
SEAL
MODE SELECTOR
BLK
SONL
C OFF
CK1
VSX2
IC418 DIGITAL SYNC DISCRIMINATER
Y SYNC
Y DOL
SRHL
MCK
C SYNC
C DOL
Y SYNC DISCRIMINATER
H COUNTER
TIMING PULSE (WINDOW) GEN
C SYNC DISCRIMINATER
YSH
CSH
IC418 YH PULSE GEN
RFRM
IC409,412,415 DOC PULSE GEN
IC413 PULSE DL
TAPE V F15A CN41-5—CN59-5—B2-L24A (TC & BB)
PB V TO W1 1/3
PB FRAMING 2 F12B W5-R35A (SERVO & DRIVE & AT)
C DOC
Y DOC
SEARCH
COM ON
BLK ON
C OFF
TO W1 1/3
SEARCH ON F12A W2-F12A (ENCODER)
2.25MHz
PB2FM
C OFF
YSH F20A NOT USED
PAL
NTSC
IC404, 410, 412, 413 H SW PULSE WIDER
IC461 Q402~404 DC GEN
IC419
IC420,421 BUFFER
IC424 SEARCH VCO (27MHz)
IC425 BUFFER
IC426 ×2
VR409 C SYNC PHASE
IC429 PULSE DL
IC427 1/4
IC428 1/4
13.5MHz
13.5MHz
H SYNC DET
IC478
X501 OSC (54MHz)
IC477
IC502 PULSE WIDTH EXTENSION
IC502 PULSE WIDTH EXTENSION
C DOP
Y DOP
IC473 PULSE DL (COUNTER)
IC470 (WRITE TIMING PULSE GEN)
AFCP
AFCL
YSH
VSET
CL 1
SHIFT REGISTER
COUNTER
TRW
P2FH
MDA 1
MDA 2
MDA 0
CNBK 1 TO W1 1/3
C DOC
CL2
CSH
ADDRESS COUNTER
ROM
GATE
CCP
CBSP
PULSE GEN
PRGN
PRGP
IC471
C CP F17A W2-F17B (ENCODER) W3-F17A,B (MOD & DEMOD)
Y DOC
CL3
Y BST
F F
Y BSP
YCP
AGCP
Y CP F16A W2-F17A (ENCODER)
AGE CP F17B W3-F16A,B (MOD & DEMOD)
TP422
SRAS
COUNTER
SRHR
STRW
Y WCK
IC472
YWCK F33A W2-F33A (ENCODER)
CL4
C OFF
Y APS
COUNTER
YWZ
IC504 TIMING SHIFTER
TP423
Y WCK
Y H ZERO
TO W1 1/3
C WCK
CWCK F27A W2-F27A (ENCODER)
CL5
C APS
COUNTER
PRWZ
PBWZ
IC492,494~496 TIMING SHIFTER
CWCK
PRW ZERO
PBW ZERO
TO W1 1/3
IC499,500 C MEMORY CLOCK GEN
CMCK TO W1 1/3
V PH 1
V PH 2
TO W1 3/3
STRW
IC434 SUM PULSE GEN
IC435 BUFFER
IC436 GATE
IC435 BUFFER
IC436 GATE
IC436 FREQ CONTROL DC GEN
IC439 VCO
VR402 SRH VR
IC433 H DET
Y SH
IC434 PULSE GEN (M.M.V)
TP412
IC441 LATCH
Q405,406 IC442,445 PULSE GEN
IC442,446 PULSE DL
VR403 Y APC
IC479 (APC)
Y WST
CK54
YMST
CLK GENERATOR
CLK DELAY
ENCODER
MULTIPLEX
MULTIPLEX
SHIFT REGISTER
MULTIPLEX
YTP
TP425
YWCK
YAPS
VPH1
VPH2
NTCL
NTSC
SHIFT REGISTER
MULTIPLEX
CAPS
CMST
CLK GENERATOR
CLK DELAY
MULTIPLEX
MULTIPLEX
CWCK
CTP
TP424
CWST
ENCODER
TP416
IC441 LATCH
IC433 PHASE ADJ
VR406 R-Y PHASE
VR405 B-Y PHASE
Q408 IC442,445 PULSE GEN
IC442,446 PULSE DL
VR408 C APC
PRGN
PRGP
C BSP

W1(TBC & SYNC GEN) BLOCK DIAGRAM 3/3 (SYNC GEN SECTION) [FOR AU-665 NTSC]

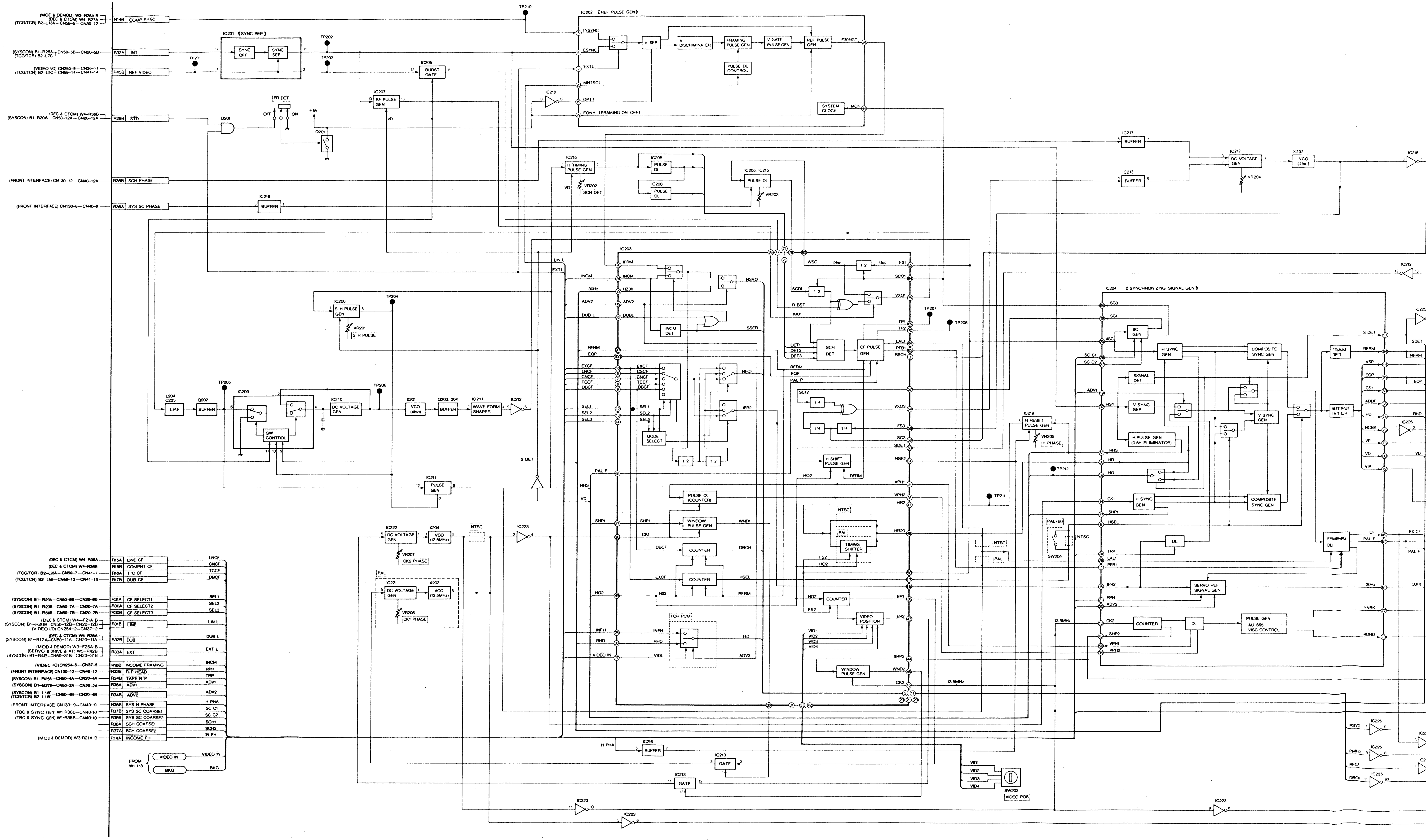
(MOD & DEMOD) W3–R28A·B
(DEC & CTCM) W4–R27A
(TCG/TCR) B2–L18A—CN58–5—CN30–12
R14B COMP SYNC
(SYSCON) B1–R25A—CN50–5B—CN20–5B
(TCG/TCR) B2–L7C
R32A INT
(VIDEO I/O) CN250–8—CN36–11
(TCG/TCR) B2–L5C—CN59–14—CN41–14
R45B REF VIDEO
(DEC & CTCM) W4–R36B
(SYSCON) B1–R20A—CN50–12A—CN20–12A
R28B STD
(FRONT INTERFACE) CN130–12—CN40–12A
R38B SCH PHASE
(FRONT INTERFACE) CN130–8—CN40–8
R36A SYS SC PHASE
(DEC & CTCM) W4–R36A
R15A LINE CF
(DEC & CTCM) W4–R36B
R15B COMPNT CF
(TCG/TCR) B2–L23A—CN59–7—CN41–7
R16A T C CF
(TCG/TCR) B2–L5B—CN59–13—CN41–13
R17B DUB CF
(SYSCON) B1–R23A—CN50–8B—CN20–8B
R31A CF SELECT1
(SYSCON) B1–R23B—CN50–7A—CN20–7A
R30A CF SELECT2
(SYSCON) B1–R50B—CN50–7B—CN20–7B
R30B CF SELECT3
(DEC & CTCM) W4–F21A·B
(SYSCON) B1–R20B–CN50–12B–CN20–12B
(VIDEO I/O) CN254–2—CN37–2
R31B LINE
(DEC & CTCM) W4–R38A
(SYSCON) B1–R17A–CN50–11A–CN20–11A
R32B DUB
(MOD & DEMOD) W3–F25A·B
(SERVO & DRIVE & AT) W5–R42B
(SYSCON) B1–R4B–CN50–31B–CN20–31B
R33A EXT
(VIDEO I/O) CN254–5—CN37–5
R18B INCOME FRAMING
(FRONT INTERFACE) CN130–12—CN40–12
R33B R/P HEAD
(SYSCON) B1–R25B—CN50–4A—CN20–4A
R34B TAPE R/P
(SYSCON) B1–B27B—CN50–2A—CN20–2A
R35A ADV1
(SYSCON) B1–L18C
(TCG/TCR) B2–L18C
CN50–4B—CN20–4B
R34B ADV2
(FRONT INTERFACE) CN130–9—CN40–9
R35B SYS H PHASE
(TBC & SYNC GEN) W1-R36B—CN40–10
R37B SYS SC COARSE1
(TBC & SYNC GEN) W1-R36B—CN40–10
R36B SYS SC COARSE2
R38A SCH COARSE1
R37A SCH COARSE2
(MOD & DEMOD) W3-R21A·B
R14A INCOME FH
FROM W1 1/3
VIDEO IN
BKG
LNCF
CNCF
TCCF
DBCF
SEL1
SEL2
SEL3
LIN L
DUB L
EXT L
INCM
RPH
TRP
ADV1
ADV2
H PHA
SC C1
SC C2
SCH1
SCH2
IN FH
IC201 《SYNC SEP》
SYNC OFF
SYNC SEP
TP201
TP202
TP203
TP204
TP205
TP206
TP207
TP208
TP210
TP211
TP212
D201
FR DET
OFF
ON
+5V
Q201
IC205
BURST GATE
IC207
BF PULSE GEN
VD
IC202 《REF PULSE GEN》
INSYNC
ESYNC
EXTL
MNTSCL
OPT 1
FONH (FRAMING ON·OFF)
V SEP
V DISCRIMINATER
FRAMING PULSE GEN
V GATE PULSE GEN
REF PULSE GEN
F30NGT
PULSE DL CONTROL
SYSTEM CLOCK
MCK
IC218
IC215
H TIMING PULSE GEN
VR202
SCH DET
IC208
PULSE DL
IC205 IC215
VR203
IC216
BUFFER
IC217
IC213
DC VOLTAGE GEN
VR204
X202
VCO (4fsc)
IC206
S H PULSE GEN
VR201
S H PULSE
L204 C225
LPF
Q202
IC209
SW CONTROL
IC210
DC VOLTAGE GEN
X201
VCO (4fsc)
Q203, 204
IC211
WAVE FORM SHAPER
IC212
PULSE GEN
S DET
IC203
IFRM
INCM
HZ30
30Hz
ADV2
DUBL
INCM DET
SSER
RSVO
RFRM
EQP
EXCF
CSCF
CNCF
TCCF
DBCF
RFCF
IFR2
SEL1
SEL2
SEL3
MODE SELECT
1/2
RHS
VD
SHP1
CK1
PAL P
PULSE DL (COUNTER)
WINDOW PULSE GEN
WND1
COUNTER
DBCH
HSEL
HO2
RFRM
FOR PCM
INFH
RHD
VIDEO IN
VIDL
HD
ADV2
WSC
2fsc
4fsc
FS1
SCO1
SCDL
VXO1
R BST
RBF
TP1
TP2
LAL1
PFB1
RSCH
DET1
DET2
DET3
SCH DET
CF PULSE GEN
SC12
1/4
VXO3
FS3
SC3
SDET
H SHIFT PULSE GEN
HSF2
VPH1
VPH2
HR2
NTSC
PAL
TIMING SHIFTER
HR20
FS2
ER1
VIDEO POSITION
ER2
VID1
VID2
VID3
VID4
SHP2
WND2
CK2
13.5MHz
IC222
X204
VCO (13.5MHz)
VR207
CK2 PHASE
IC221
X203
VR206
CK1 PHASE
IC223
H PHA
GATE
SW203
VIDEO POS
IC219
H RESET PULSE GEN
VR205
H PHASE
PAL760
SW205
IC204 《SYNCHRONIZING SIGNAL GEN》
SC0
SC1
4SC
SC GEN
SC C1
SC C2
H SYNC GEN
COMPOSITE SYNC GEN
SIGNAL DET
ADV1
RSY
V SYNC SEP
H PULSE GEN (D.SH ELIMINATOR)
V SYNC GEN
HR
HO
CK1
SHP1
HSEL
TRP
LAL1
PFB1
DL
IFR2
RPH
ADV2
SERVO REF SIGNAL GEN
COUNTER
PULSE GEN AU 665 VISC CONTROL
VPH1
VPH2
FRAM DET
OUTPUT LATCH
FRAMING DET
CF
PAL P
EX CF
30Hz
YNBK
RDHD
SDET
RFRM
VSP
EQP
CS1
ADBF
HD
NCBK
VP
VD
VIP
RSVO
PMHD
RFCF
DBCH
IC225
IC226

YNC GEN SECTION) [FOR AU-665 NTSC]

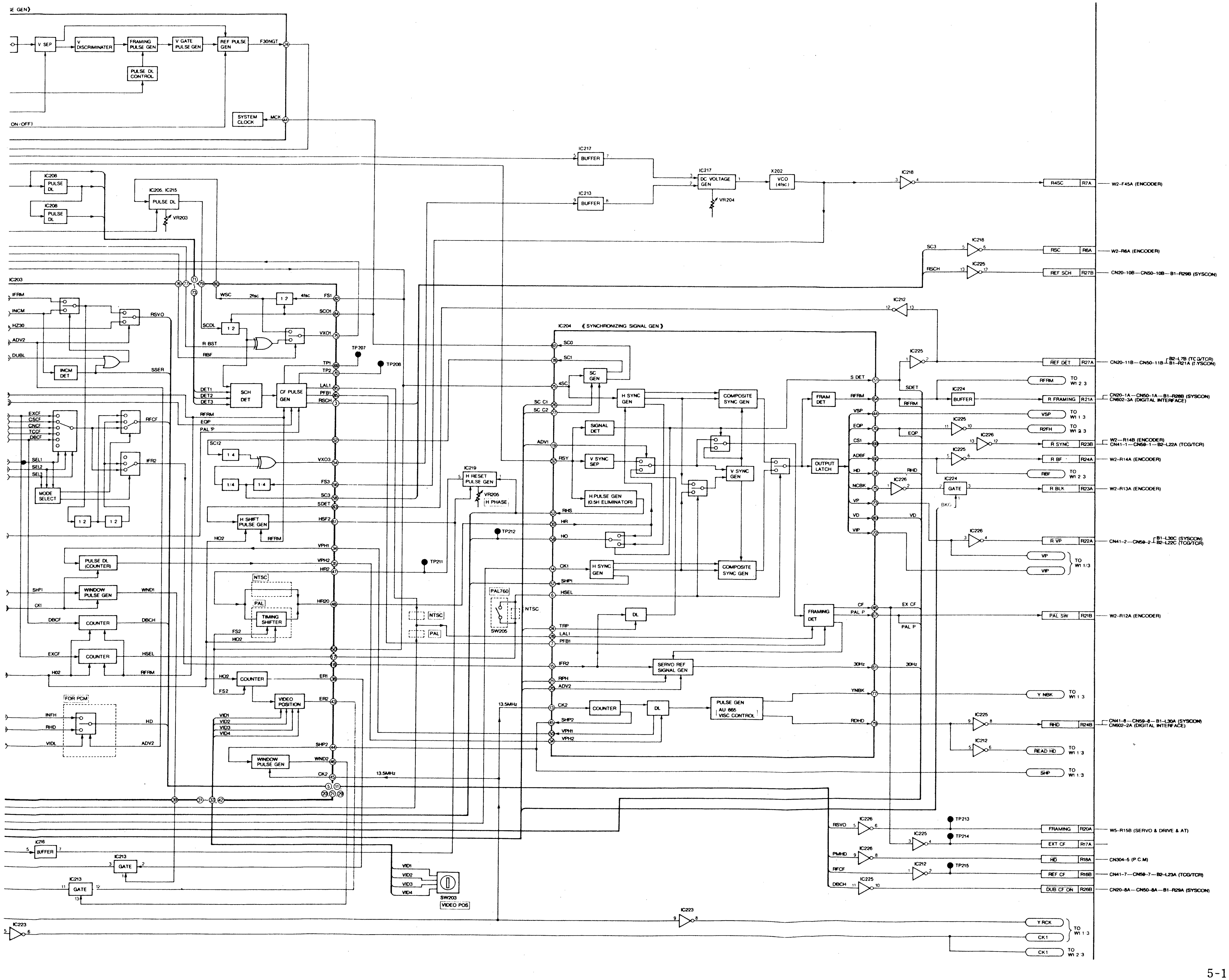
V SEP
V DISCRIMINATER
FRAMING PULSE GEN
V GATE PULSE GEN
REF PULSE GEN
F30NGT
PULSE DL CONTROL
SYSTEM CLOCK
MCK
IC217 BUFFER
IC213 BUFFER
IC217 DC VOLTAGE GEN
VR204
X202 VCO (4fsc)
IC218
R4SC
R7A
W2-F45A (ENCODER)
IC208 PULSE DL
IC206, IC215 PULSE DL
VR203
IC203
IFRM
INCM
HZ30
ADV2
DUBL
RSVO
SSER
INCM DET
RFCF
IFR2
MODE SELECT
SEL1
SEL2
SEL3
EXCF
CSCF
CNCF
TCCF
DBCF
WSC
SCDL
R BST
RBF
DET1
DET2
DET3
SCH DET
CF PULSE GEN
LAL1
PFB1
RSCH
TP1
TP2
TP207
TP208
FS1
SCO1
VXO1
VXO3
FS3
SC3
SDET
HSF2
H SHIFT PULSE GEN
IC219 H RESET PULSE GEN
VR205 H PHASE
TP212
TP211
VPH1
VPH2
HR2
HR20
PULSE DL (COUNTER)
WINDOW PULSE GEN
WND1
SHP1
CK1
DBCF
COUNTER
DBCH
HSEL
RFRM
HO2
ER1
ER2
FS2
VIDEO POSITION
NTSC
PAL
TIMING SHIFTER
PAL760
SW205
FOR PCM
INFH
RHD
VIDL
HD
ADV2
VID1
VID2
VID3
VID4
SHP2
WND2
CK2
13.5MHz
IC204 (SYNCHRONIZING SIGNAL GEN)
SCO
SC1
4SC
SC GEN
SC C1
SC C2
H SYNC GEN
SIGNAL DET
ADV1
RSY
V SYNC SEP
H PULSE GEN (0.5H ELIMINATOR)
RHS
HR
HO
CK1
SHP1
HSEL
TRP
LAL1
PFB1
IFR2
RPH
ADV2
CK2
SHP2
VPH1
VPH2
COMPOSITE SYNC GEN
V SYNC GEN
DL
SERVO REF SIGNAL GEN
COUNTER
PULSE GEN AU 665 VISC CONTROL
FRAM DET
OUTPUT LATCH
FRAMING DET
S DET
RFRM
VSP
EQP
CS1
ADBF
HD
NCBK
VP
VD
VIP
CF
PAL P
EX CF
30Hz
YNBK
RDHD
IC216 BUFFER
IC213 GATE
IC223
SW203 VIDEO POS
IC218
IC225
IC212
IC224 BUFFER
IC226
IC224 GATE
BKG
RSC
R6A
W2-R6A (ENCODER)
SC3
RSCH
REF SCH
R27B
CN20-10B — CN50-10B — B1-R29B (SYSCON)
REF DET
R27A
CN20-11B — CN50-11B — B2-L7B (TC G/TCR) B1-R21A (SYSCON)
RFRM
TO W1 2/3
R FRAMING
R21A
CN20-1A — CN50-1A — B1-R28B (SYSCON) CN602-3A (DIGITAL INTERFACE)
VSP
TO W1 1/3
R2FH
TO W1 2/3
R SYNC
R23B
W2-R14B (ENCODER) CN41-1 — CN59-1 — B2-L22A (TCG/TCR)
R BF
R24A
W2-R14A (ENCODER)
RBF
TO W1 2/3
R BLK
R23A
W2-R13A (ENCODER)
R VP
R22A
CN41-2 — CN59-2 — B1-L30C (SYSCON) B2-L22C (TCG/TCR)
VP
VIP
TO W1 1/3
PAL SW
R21B
W2-R12A (ENCODER)
Y NBK
TO W1 1/3
RHD
R24B
CN41-8 — CN59-8 — B1-L30A (SYSCON) CN602-2A (DIGITAL INTERFACE)
READ HD
TO W1 1/3
SHP
TO W1 1/3
RSVO
TP213
TP214
TP215
FRAMING
R20A
W5-R15B (SERVO & DRIVE & AT)
EXT CF
R17A
PMHD
HD
R18A
CN304-5 (P.C.M)
RFCF
REF CF
R16B
CN41-7 — CN59-7 — B2-L23A (TCG/TCR)
DBCH
DUB CF ON
R26B
CN20-8A — CN50-8A — B1-R29A (SYSCON)
Y RCK
CK1
TO W1 1/3
CK1
TO W1 2/3

IC203 (μPD65024GF152)

PIN NO.	PIN NAME	IN/OUT	DESCRIPTION
3	RSCH	OUT	REFERENCE SCH
5	DBCH	OUT	DUB COLOR FRAMING IN HIGH
6	OSCF	IN	COMPO SITE COLOR FRAMING
7	CNCF	IN	COMPONENT COLOR FRAMING (ID PULSE)
8	TCCF	IN	TIME CODE COLOR FRAMING
9	DBCF	IN	DUB COLOR FRAMING
10	EXCF	IN	EXTERNAL COLOR FRAMING
11	RFCF	OUT	REFERENCE COLOR FRAMING FOR SERVO
12	SEL1	IN	COLOR FRAMING SELECTOR SIGNAL
13	SEL2	IN	COLOR FRAMING SELECTOR SIGNAL
14	SEL3	IN	COLOR FRAMING SELECTOR SIGNAL
16	IFR2	OUT	COLOR FRAMING SIGNAL FOR E-E
19	ADV2	IN	ADVANCE 2
20	RSVO	OUT	REFERENCE FOR SERVO VO (30Hz)
21	SSER	OUT	IMCM SIGNAL (24P) IN Ⓗ
22	HZ30	IN	30Hz
24	INCM	IN	INCOME 30Hz
25	DUBL	IN	DUB LOW
26	IFRM	IN	INCOME FRAME (REF 30Hz)
27	VIDL	IN	DELAYED VERTICAL INTERVAL
28	INFH	IN	INCOME FRAMING
29	HD	OUT	HORIZONTAL DRIVE PULSE
30	RHD	IN	HORIZONTAL DRIVE PULSE (=TBC READ TIMING)
31	VID1	IN	VIDEO φ1
32	VID2	IN	VIDEO φ2
33	VID3	IN	VIDEO φ3
34	VPH1	IN	VIDEO PHASE 1
35	VPH2	OUT	VIDEO PHASE 2
36	CK1	IN	CLOCK 1
37	SHP1	IN	SAMPLE HOLD PULSE 1
38	ER1	OUT	ERROR 1
39	WND1	OUT	WINDOW 1
42	VID4	IN	VIDEO φ4
43	ER2	OUT	ERROR 2
44	SHP	IN	SAMPLE HOLD PULSE 2
45	CK2	IN	CLOCK 2
46	WND2	OUT	WINDOW 2
47	HR2	IN	H RESET 2
48	HR20	OUT	H RESET 2 OUTPUT
49	HO2	IN	HO SIGNAL (IC204 58P) INPUT NO. 2
50	FS2	IN	FOUR SUB CARRIER NO. 2 (4 FSC)
52	SCI2	IN	SC1 (IC204 78P) INPUT NO. 2
53	SCH1	IN	SCH COARSE CONTROL NO. 1
54	VXO3	OUT	CONTROL SIGNAL 3 FOR VXO
55	SCH2	IN	SCH COARSE CONTROL NO. 2
56	FS3	IN	FOUR SC NO. 3 (4 FSC)
58	SC3	OUT	SUB CARRIER 3
60	SC02	IN	SUB CARRIER O (IC204 65P) INPUT NO. 2
61	HSF2	OUT	H SHIFT PROTECTION SIGNAL 2
69	TP1	OUT	TEST POINT 1 (FOR SCH ADJ.)
70	TP2	OUT	TEST POINT 2 (FOR SCH ADJ.)
71	DET1	IN	DETECTION FOR SUB CARRIER POLARITY (H TIMING PULSE)
72	DET2	IN	DETECTION FOR SUB CARRIER POLARITY (H TIMING PULSE)
73	DET3	IN	DETECTION FOR SUB CARRIER POLARITY (H TIMING PULSE)
74	PALP	IN	PAL PULSE
75	VXO1	OUT	CONTROL SIGNAL 1 FOR VXO
76	RBF	IN	REFERENCE VIDEO BURST FLAG
77	RBST	IN	REFERENCE VIDEO BURST
79	SCDL	IN	DELAYED 2FSC
80	WSC	OUT	DOUBLE SUB CARRIER (2 FSC)
81	SELM	IN	SELECT MODE (NTSC Ⓛ PAL Ⓗ)
82	FS1	IN	FOUR SUB CARRIER 1 (4 FSC)
83	SDET	IN	SYNC DETECTION
84	SCO1	IN	SUB CARRIER O (IC204 65P) INPUT NO. 1
85	PFB1	OUT	COLOR FRAMING RESET PULSE (PAL)
95	LALI	OUT	COLOR FRAMING RESET PULSE (NTSC)
96	CF1	IN	COLOR FRAMING 1
97	RFRM	IN	REFERENCE FRAME
100	EQP	IN	EQUALIZING PULSE

IC204 SYNC GEN GATE ARRAY PIN FUNCTION (μPD65040GF144)

PIN NO.	PIN NAME	IN OUT	FUNCTION
1	RST	IN	TEST RESET
2	VDD	IN	+5V
3	GND		
4	MODI	IN	[0] NTSC [1] PAL
5	MOD2	IN	[0] NTSC [1] PAL
6	HSEL	IN	H SYNC SELECT
7	PFBW	IN	V-BLK SET (NTSC) COLOR FRANING CONT. (PAL)
8	LSEL	IN	V-SYNC SELECT
9	CKSW	IN	VIDEO PHASE CLOCK SELECT
10	TST1	IN	TEST CONTROL
11	TST2	IN	TEST CONTROL
12	BDET	IN	BURST DETECT
13	CK2	IN	13.5MHz CLOCK
14	CK1	IN	13.5MHz CLOCK
15	IFR2	IN	INCOME VIDEO FRAMING
16	LPF2	IN	LPF FOR FRAMING
17	SSER	IN	SOURCE SEARCH 30Hz SELECT
18	PINH	IN	VISC CONTROL ON/OFF
19	ADV1	IN	ADVANCE 1 FOR V_P SELECT
20	ADV2	IN	ADVANCE 2 FOR 30Hz SELECT
21	RPH	IN	R/P HEAD SELECT
22	GND		
23	VDD	IN	+5V
24	TRP	IN	TRAPEZOIDE FOR PLL
26	SCC1	IN	SC PHASE CONTROL
27	SCC2	IN	SC PHASE CONTROL
28	LAL1	IN	COLOR FRAMING RESET
29	IVS	IN	INCOME VIDEO V SYNC
30	HR	IN	H.SYNC RESET
31	ISY	IN	IN VIDEO COMP SYNC
32	RSY	IN	REF VIDEO COMP SYNC
33	GND		
34	VPH2	IN	VIDEO PHASE MMV
35	PST1	IN	VISC CONTROL 90° STEP
36	PST2	IN	VISC CONTROL 90° STEP
37	ADS1	IN	ADVANCE SET
38	ADS2	IN	ADVANCE SET
39	ADS3	IN	ADVANCE SET
40	ADS4	IN	ADVANCE SET
41	RHS	OUT	REFERENCE H.SYNC
42	VDD	IN	+5V
43	GND		
44	VSP	OUT	V SEPARATION PULSE
45	SHP2	OUT	CK2 SAMPLE & HOLD PULSE 2
46	CF	OUT	COLOR FRAMING SIGNAL
47	SSEL	IN	HR ADJUST RANGE
48	CS2	OUT	COMPOSITE SYNC
49	LPF1	IN	LPF FOR FRAMING
50	VPH1	IN	VIDEO PHASE MMV
51	SDET	OUT	REF SYNC DETECT
52	RHS	OUT	REF H SYNC W/O EQ PULSE
53	CBU	OUT	1.125MHz
54	YBU	OUT	2.25MHz
55	CBF	OUT	C BURST FLAG
56	YBF	OUT	Y BURST FLAG
57	SHP1	OUT	CK1 SAMPLE & HOLD PULSE
58	HO	OUT	TRAPEZOIDE H PULSE
59	IFR1	OUT	IN VIDEO FRAMING
60	RYS	OUT	R-Y (P_R) SYNC
61	30Hz	OUT	SERVO CONTROL 30Hz
62	GND		
63	VDD	IN	+5V
64	RFRM	OUT	REF FRAMING
65	SC0	OUT	SUB CARRIER
66	ADBF	OUT	ADVANCE BURST FLAG
67	PALP	OUT	PAL PULSE (0.5H)
68	CNBK	OUT	CHROMA DIGITAL BLANKING
69	CS1	OUT	COMP SYNC
70	EQP	OUT	EQUALIZER PULSE
71	BF	OUT	BURST FLAG
72	VIP	OUT	10 LINE PULSE
73	VP	OUT	V PULSE
74	HD	OUT	HORIZONTAL DRIVE
75	NCBK	OUT	COMP BLANKING SIGNAL
76	CBK	OUT	COMP BLANKING SIGNAL
77	YNBK	OUT	Y DIGITAL BLANKING
78	SC1	OUT	SUB CARRIER
79	RDHD	OUT	TBC READ START
80	VD	OUT	VERTICAL DRIVE

W2 SUB(9BIT A/D) BLOCK DIAGRAM[FOR AU-665 NTSC]

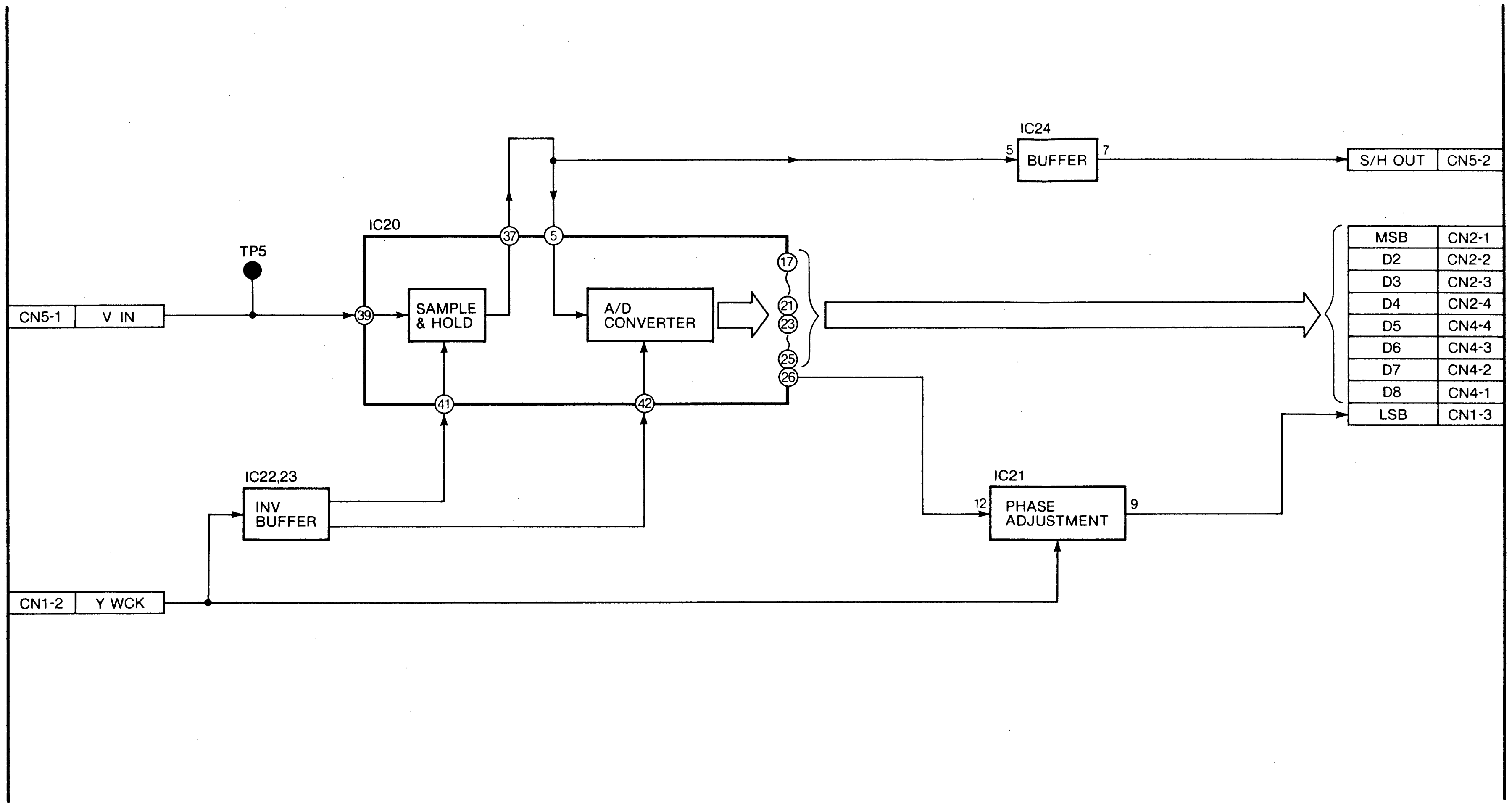
IC24
5
BUFFER
7
S/H OUT
CN5-2
IC20
37
5
TP5
17
21
23
25
26
CN5-1
V IN
39
SAMPLE & HOLD
A/D CONVERTER
41
42
MSB
CN2-1
D2
CN2-2
D3
CN2-3
D4
CN2-4
D5
CN4-4
D6
CN4-3
D7
CN4-2
D8
CN4-1
LSB
CN1-3
IC22,23
INV BUFFER
IC21
12
PHASE ADJUSTMENT
9
CN1-2
Y WCK

W2 (EN

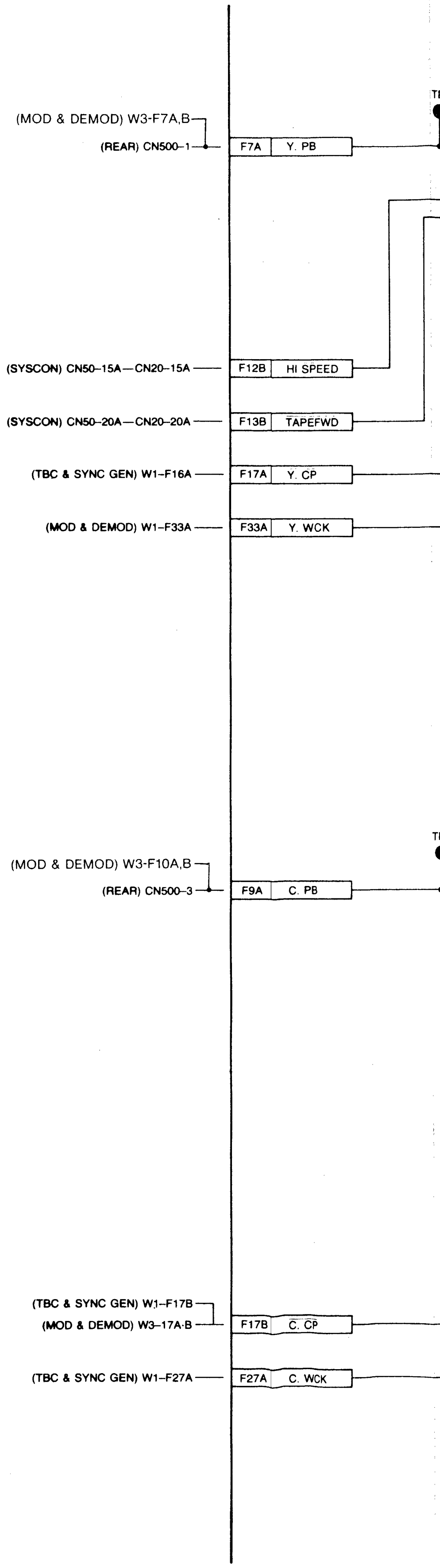
(MOD & DEMOD) W3-F7A,B
(REAR) CN500-1
F7A
Y. PB
(SYSCON) CN50-15A—CN20-15A
F12B
HI SPEED
(SYSCON) CN50-20A—CN20-20A
F13B
TAPEFWD
(TBC & SYNC GEN) W1-F16A
F17A
Y. CP
(MOD & DEMOD) W1-F33A
F33A
Y. WCK
(MOD & DEMOD) W3-F10A,B
(REAR) CN500-3
F9A
C. PB
(TBC & SYNC GEN) W1-F17B
(MOD & DEMOD) W3-17A·B
F17B
C. CP
(TBC & SYNC GEN) W1-F27A
F27A
C. WCK

W2 (ENCODER) BLOCK DIAGRAM 1/3 (A/D SECTION)

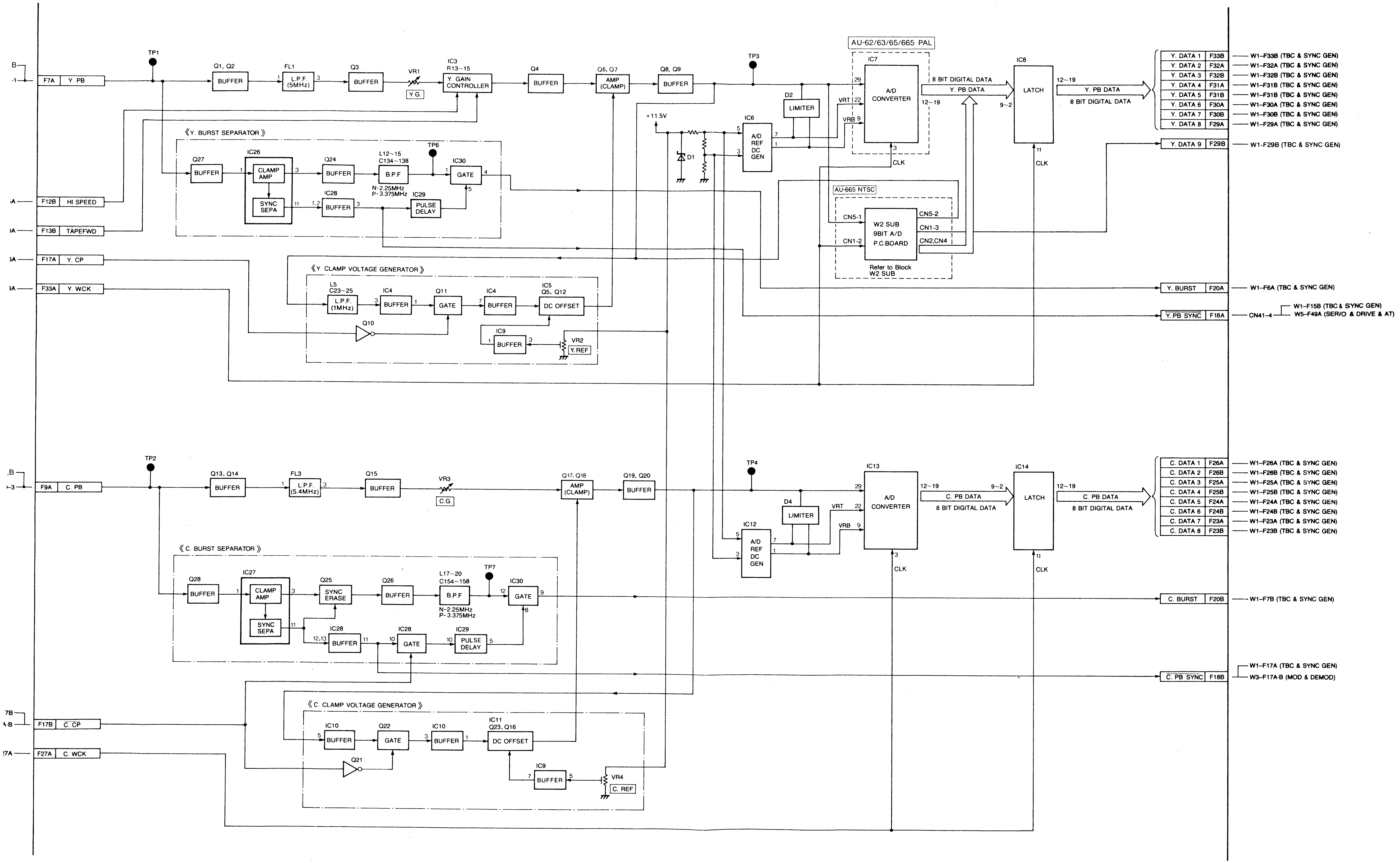

F7A Y. PB
TP1
Q1, Q2 BUFFER
FL1 L.P.F (5MHz)
Q3 BUFFER
VR1 Y.G.
IC3 R13~15 Y GAIN CONTROLLER
Q4 BUFFER
Q6, Q7 AMP (CLAMP)
Q8, Q9 BUFFER
TP3
AU-62/63/65/665 PAL
IC7 A/D CONVERTER
VRT 22
VRB 9
CLK
D2 LIMITER
+11.5V
D1
IC6 A/D REF DC GEN
8 BIT DIGITAL DATA
Y. PB DATA
IC8 LATCH
12~19
9~2
Y. PB DATA
8 BIT DIGITAL DATA
Y. DATA 1 F33B W1-F33B (TBC & SYNC GEN)
Y. DATA 2 F32A W1-F32A (TBC & SYNC GEN)
Y. DATA 3 F32B W1-F32B (TBC & SYNC GEN)
Y. DATA 4 F31A W1-F31B (TBC & SYNC GEN)
Y. DATA 5 F31B W1-F31B (TBC & SYNC GEN)
Y. DATA 6 F30A W1-F30A (TBC & SYNC GEN)
Y. DATA 7 F30B W1-F30B (TBC & SYNC GEN)
Y. DATA 8 F29A W1-F29A (TBC & SYNC GEN)
Y. DATA 9 F29B W1-F29B (TBC & SYNC GEN)
《Y. BURST SEPARATOR》
Q27 BUFFER
IC26 CLAMP AMP SYNC SEPA
Q24 BUFFER
IC28 BUFFER
L12~15 C134~138 B.P.F
N-2.25MHz P-3.375MHz
TP6
IC30 GATE
IC29 PULSE DELAY
F12B HI SPEED
F13B TAPEFWD
F17A Y. CP
F33A Y. WCK
AU-665 NTSC
W2 SUB 9BIT A/D P.C.BOARD
CN5-1 CN1-2 CN5-2 CN1-3 CN2,CN4
Refer to Block W2 SUB
《Y. CLAMP VOLTAGE GENERATOR》
L5 C23~25 L.P.F. (1MHz)
IC4 BUFFER
Q11 GATE
IC4 BUFFER
IC5 Q5, Q12 DC OFFSET
Q10
IC9 BUFFER
VR2 Y.REF
Y. BURST F20A W1-F6A (TBC & SYNC GEN)
Y. PB SYNC F18A CN41-4 W1-F15B (TBC & SYNC GEN) W5-F49A (SERVO & DRIVE & AT)
F9A C. PB
TP2
Q13, Q14 BUFFER
FL3 L.P.F. (5.4MHz)
Q15 BUFFER
VR3 C.G
Q17, Q18 AMP (CLAMP)
Q19, Q20 BUFFER
TP4
D4 LIMITER
IC12 A/D REF DC GEN
IC13 A/D CONVERTER
C. PB DATA 8 BIT DIGITAL DATA
IC14 LATCH
C. PB DATA 8 BIT DIGITAL DATA
C. DATA 1 F26A W1-F26A (TBC & SYNC GEN)
C. DATA 2 F26B W1-F26B (TBC & SYNC GEN)
C. DATA 3 F25A W1-F25A (TBC & SYNC GEN)
C. DATA 4 F25B W1-F25B (TBC & SYNC GEN)
C. DATA 5 F24A W1-F24A (TBC & SYNC GEN)
C. DATA 6 F24B W1-F24B (TBC & SYNC GEN)
C. DATA 7 F23A W1-F23A (TBC & SYNC GEN)
C. DATA 8 F23B W1-F23B (TBC & SYNC GEN)
《C. BURST SEPARATOR》
Q28 BUFFER
IC27 CLAMP AMP SYNC SEPA
Q25 SYNC ERASE
Q26 BUFFER
L17~20 C154~158 B.P.F
N-2.25MHz P-3.375MHz
TP7
IC30 GATE
IC28 BUFFER
IC28 GATE
IC29 PULSE DELAY
C. BURST F20B W1-F7B (TBC & SYNC GEN)
C. PB SYNC F18B W1-F17A (TBC & SYNC GEN) W3-F17A-B (MOD & DEMOD)
F17B C. CP
F27A C. WCK
《C. CLAMP VOLTAGE GENERATOR》
IC10 BUFFER
Q22 GATE
IC10 BUFFER
IC11 Q23, Q16 DC OFFSET
Q21
IC9 BUFFER
VR4 C. REF

W2 (ENCODER) BLOCK DIAGRAM

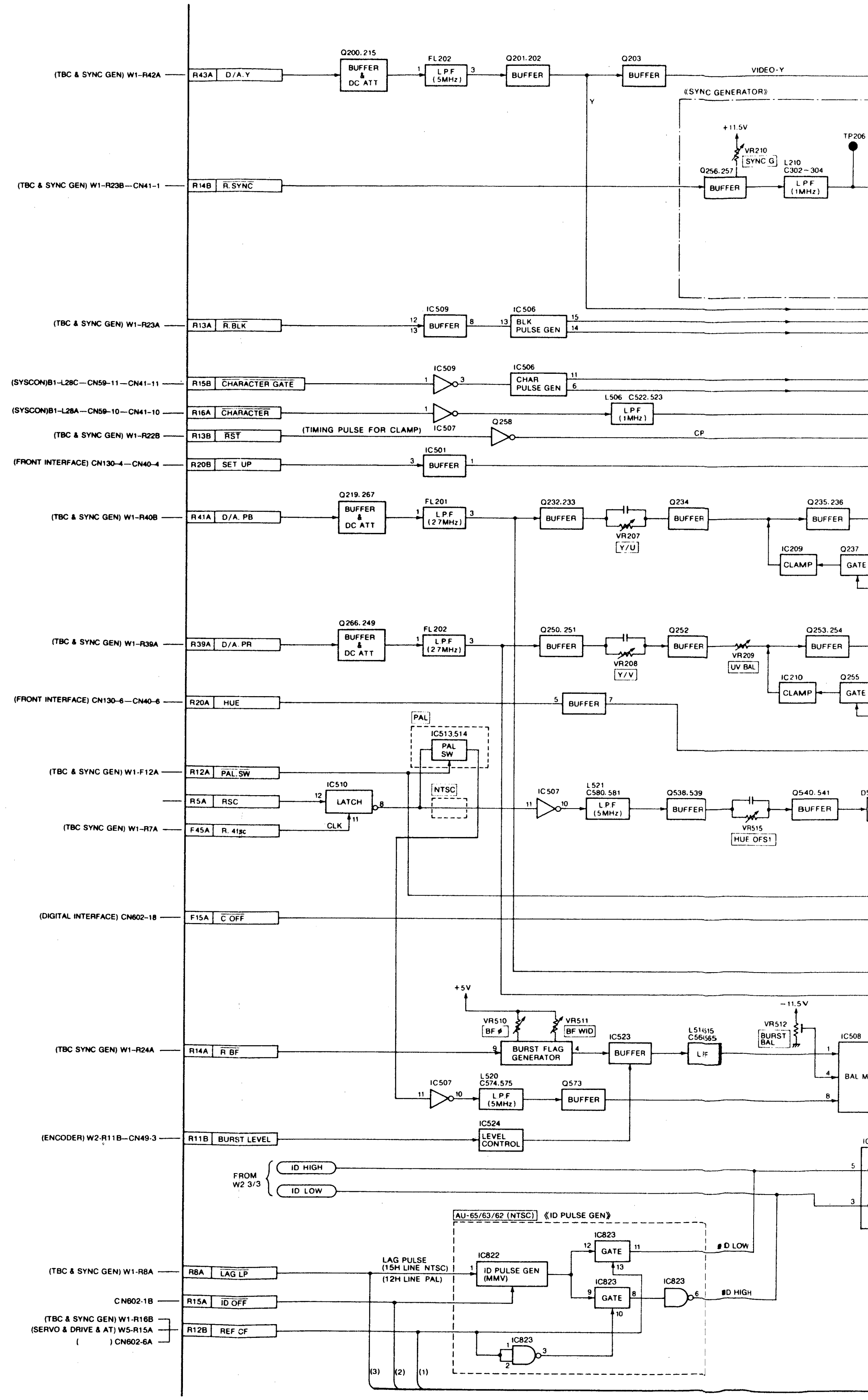
(TBC & SYNC GEN) W1-R42A
R43A D/A.Y
Q200.215 BUFFER & DC ATT
FL202 L.P.F (5MHz)
Q201.202 BUFFER
Q203 BUFFER
VIDEO-Y
(SYNC GENERATOR)
+11.5V
VR210 SYNC G
Q256.257 BUFFER
L210 C302-304 L.P.F (1MHz)
TP206
(TBC & SYNC GEN) W1-R23B—CN41-1
R14B R.SYNC
(TBC & SYNC GEN) W1-R23A
R13A R.BLK
IC509 BUFFER
IC506 BLK PULSE GEN
(SYSCON)B1-L28C—CN59-11—CN41-11
R15B CHARACTER GATE
IC509
IC506 CHAR PULSE GEN
(SYSCON)B1-L28A—CN59-10—CN41-10
R16A CHARACTER
L506 C522.523 L.P.F (1MHz)
(TBC & SYNC GEN) W1-R22B
R13B RST
(TIMING PULSE FOR CLAMP)
IC507
Q258
CP
(FRONT INTERFACE) CN130-4—CN40-4
R20B SET UP
IC501 BUFFER
(TBC & SYNC GEN) W1-R40B
R41A D/A. PB
Q219.267 BUFFER & DC ATT
FL201 L.P.F (2.7MHz)
Q232.233 BUFFER
VR207 Y/U
Q234 BUFFER
Q235.236 BUFFER
IC209 CLAMP
Q237 GATE
(TBC & SYNC GEN) W1-R39A
R39A D/A. PR
Q266.249 BUFFER & DC ATT
FL202 L.P.F (2.7MHz)
Q250.251 BUFFER
VR208 Y/V
Q252 BUFFER
VR209 UV BAL
Q253.254 BUFFER
IC210 CLAMP
Q255 GATE
(FRONT INTERFACE) CN130-6—CN40-6
R20A HUE
BUFFER
PAL
IC513.514 PAL SW
NTSC
(TBC & SYNC GEN) W1-F12A
R12A PAL.SW
R5A RSC
IC510 LATCH
CLK
(TBC SYNC GEN) W1-R7A
F45A R. 4fsc
IC507
L521 C580.581 L.P.F (5MHz)
Q538.539 BUFFER
VR515 HUE OFS1
Q540.541 BUFFER
(DIGITAL INTERFACE) CN602-18
F15A C OFF
+5V
VR510 BF ϕ
VR511 BF WID
(TBC SYNC GEN) W1-R24A
R14A R BF
BURST FLAG GENERATOR
IC523 BUFFER
L514.515 C564.565 L.P.F
-11.5V
VR512 BURST BAL
IC508 BAL M
IC507
L520 C574.575 L.P.F (5MHz)
Q573 BUFFER
(ENCODER) W2-R11B—CN49-3
R11B BURST LEVEL
IC524 LEVEL CONTROL
FROM W2 3/3
ID HIGH
ID LOW
AU-65/63/62 (NTSC)
(ID PULSE GEN)
IC823 GATE
ID LOW
(TBC & SYNC GEN) W1-R8A
R8A LAG LP
LAG PULSE (15H LINE NTSC) (12H LINE PAL)
IC822 ID PULSE GEN (MMV)
IC823 GATE
IC823
ID HIGH
CN602-1B
R15A ID OFF
(TBC & SYNC GEN) W1-R16B
(SERVO & DRIVE & AT) W5-R15A
( ) CN602-6A
R12B REF CF
IC823
(3)
(2)
(1)

DIAGRAM 2/3 (ENCODE SECTION)

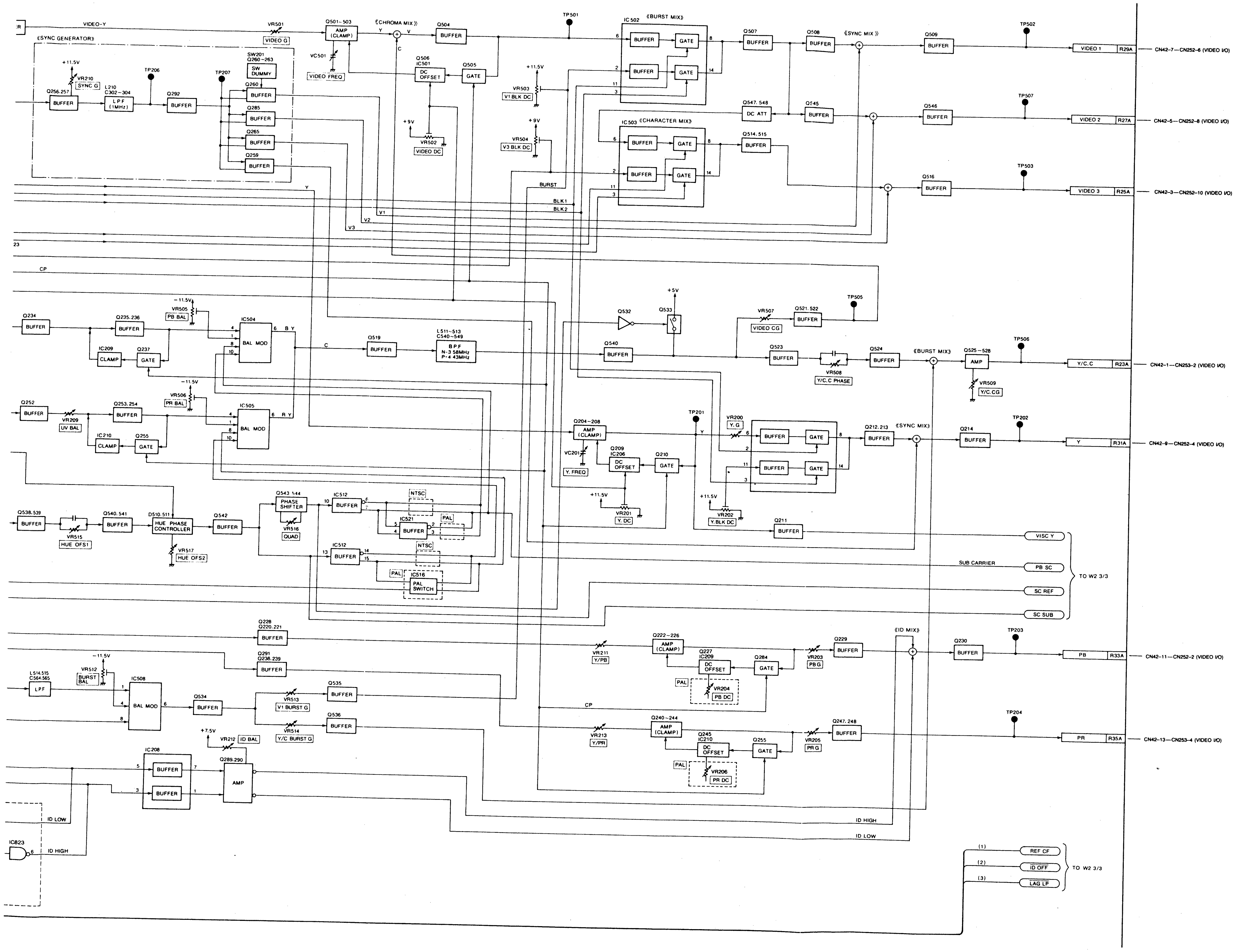
VIDEO-Y
VR501
VIDEO G
Q501~503
AMP (CLAMP)
《CHROMA MIX》
Q504
BUFFER
TP501
IC502 《BURST MIX》
BUFFER
GATE
Q507
Q508
《SYNC MIX》
Q509
TP502
VIDEO 1
R29A
CN42-7—CN252-6 (VIDEO I/O)
《SYNC GENERATOR》
SW201 Q260~263
SW DUMMY
VC501
VIDEO FREQ
Q506 IC501
DC OFFSET
Q505
GATE
+11.5V
VR503
V1 BLK DC
VR210
SYNC G
Q256.257
L210 C302~304
LPF (1MHz)
TP206
TP207
Q292
Q260
Q285
Q265
Q259
+9V
VR502
VIDEO DC
VR504
V3 BLK DC
Q547.548
DC ATT
Q545
Q546
TP507
VIDEO 2
R27A
CN42-5—CN252-8 (VIDEO I/O)
IC503 《CHARACTER MIX》
Q514.515
Q516
TP503
VIDEO 3
R25A
CN42-3—CN252-10 (VIDEO I/O)
BURST
BLK1
BLK2
V1
V2
V3
Y
C
CP
23
+5V
Q532
Q533
VR507
VIDEO CG
Q521.522
TP505
Q234
Q235.236
-11.5V
VR505
PB BAL
IC504
BAL MOD
IC209
CLAMP
Q237
Q519
L511~513 C540~549
BPF N-3.58MHz P-4.43MHz
Q540
Q523
VR508
Y/C.C PHASE
Q524
《BURST MIX》
Q525~528
AMP
TP506
VR509
Y/C.CG
Y/C.C
R23A
CN42-1—CN253-2 (VIDEO I/O)
Q252
VR209
UV BAL
Q253.254
VR506
PR BAL
IC505
IC210
Q255
Q204~208
AMP (CLAMP)
VC201
Y. FREQ
Q209 IC206
Q210
TP201
VR200
Y. G
Q212.213
《SYNC MIX》
Q214
TP202
R31A
CN42-9—CN252-4 (VIDEO I/O)
+11.5V
VR201
Y. DC
VR202
Y. BLK DC
Q211
Q538.539
VR515
HUE OFS1
Q540.541
D510.511
HUE PHASE CONTROLLER
VR517
HUE OFS2
Q542
Q543.544
PHASE SHIFTER
VR516
QUAD
IC512
IC521
NTSC
PAL
IC516
PAL SWITCH
VISC Y
SUB CARRIER
PB SC
SC REF
SC SUB
TO W2 3/3
Q228 Q220.221
Q291 Q238.239
-11.5V
VR512
BURST BAL
L514.515 C564.565
LPF
IC508
Q534
Q535
VR513
V1 BURST G
Q536
VR514
Y/C BURST G
+7.5V
VR212
ID BAL
Q289.290
IC208
VR211
Y/PB
Q222~226
Q227 IC209
Q284
VR203
PB G
Q229
《ID MIX》
Q230
TP203
PB
R33A
CN42-11—CN252-2 (VIDEO I/O)
VR204
PB DC
VR213
Y/PR
Q240~244
Q245 IC210
VR205
PR G
Q247.248
TP204
PR
R35A
CN42-13—CN253-4 (VIDEO I/O)
VR206
PR DC
ID HIGH
ID LOW
IC823
(1)
(2)
(3)
REF CF
ID OFF
LAG LP
TO W2 3/3

W2 (ENCODER) BLOCK DIAGRAM 3/3 (VISC SECTION)

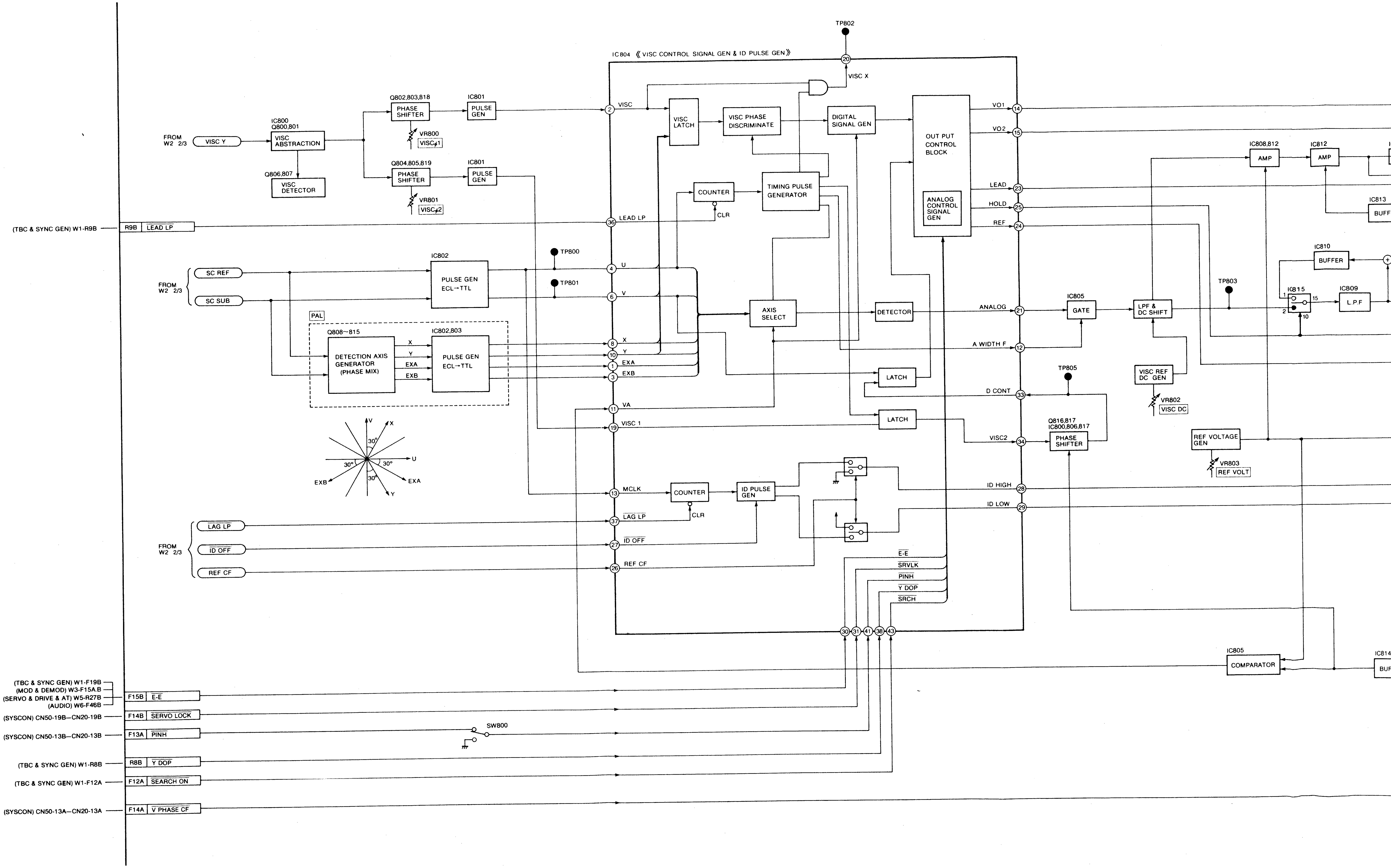
TP802
IC804 《VISC CONTROL SIGNAL GEN & ID PULSE GEN》
VISC X
Q802,803,818
PHASE SHIFTER
IC801
PULSE GEN
VR800
VISC φ1
VISC
VISC LATCH
VISC PHASE DISCRIMINATE
DIGITAL SIGNAL GEN
OUT PUT CONTROL BLOCK
ANALOG CONTROL SIGNAL GEN
VO1
VO2
LEAD
HOLD
REF
IC800
Q800,801
FROM W2 2/3
VISC Y
VISC ABSTRACTION
Q806,807
VISC DETECTOR
Q804,805,819
PHASE SHIFTER
IC801
PULSE GEN
VR801
VISC φ2
COUNTER
CLR
TIMING PULSE GENERATOR
(TBC & SYNC GEN) W1-R9B
R9B
LEAD LP
LEAD LP
TP800
TP801
IC802
PULSE GEN ECL→TTL
FROM W2 2/3
SC REF
SC SUB
U
V
AXIS SELECT
DETECTOR
ANALOG
IC805
GATE
LPF & DC SHIFT
A WIDTH F
PAL
Q808~815
IC802,803
DETECTION AXIS GENERATOR (PHASE MIX)
PULSE GEN ECL→TTL
X
Y
EXA
EXB
LATCH
D CONT
TP805
VA
VISC 1
LATCH
VISC2
Q816,817
IC800,806,817
PHASE SHIFTER
VISC REF DC GEN
VR802
VISC DC
REF VOLTAGE GEN
VR803
REF VOLT
TP803
IC808,812
AMP
IC812
AMP
IC813
BUFF
IC810
BUFFER
IC815
IC809
L.P.F
V
X
U
Y
EXA
EXB
30°
MCLK
COUNTER
CLR
ID PULSE GEN
ID HIGH
ID LOW
FROM W2 2/3
LAG LP
ID OFF
REF CF
LAG LP
ID OFF
REF CF
E-E
SRVLK
PINH
Y DOP
SRCH
IC805
COMPARATOR
IC814
BUF
(TBC & SYNC GEN) W1-F19B
(MOD & DEMOD) W3-F15A.B
(SERVO & DRIVE & AT) W5-R27B
(AUDIO) W6-F46B
F15B
E-E
(SYSCON) CN50-19B—CN20-19B
F14B
SERVO LOCK
(SYSCON) CN50-13B—CN20-13B
F13A
PINH
SW800
(TBC & SYNC GEN) W1-R8B
R8B
Y DOP
(TBC & SYNC GEN) W1-F12A
F12A
SEARCH ON
(SYSCON) CN50-13A—CN20-13A
F14A
V PHASE CF

RAM 3/3 (VISC SECTION)

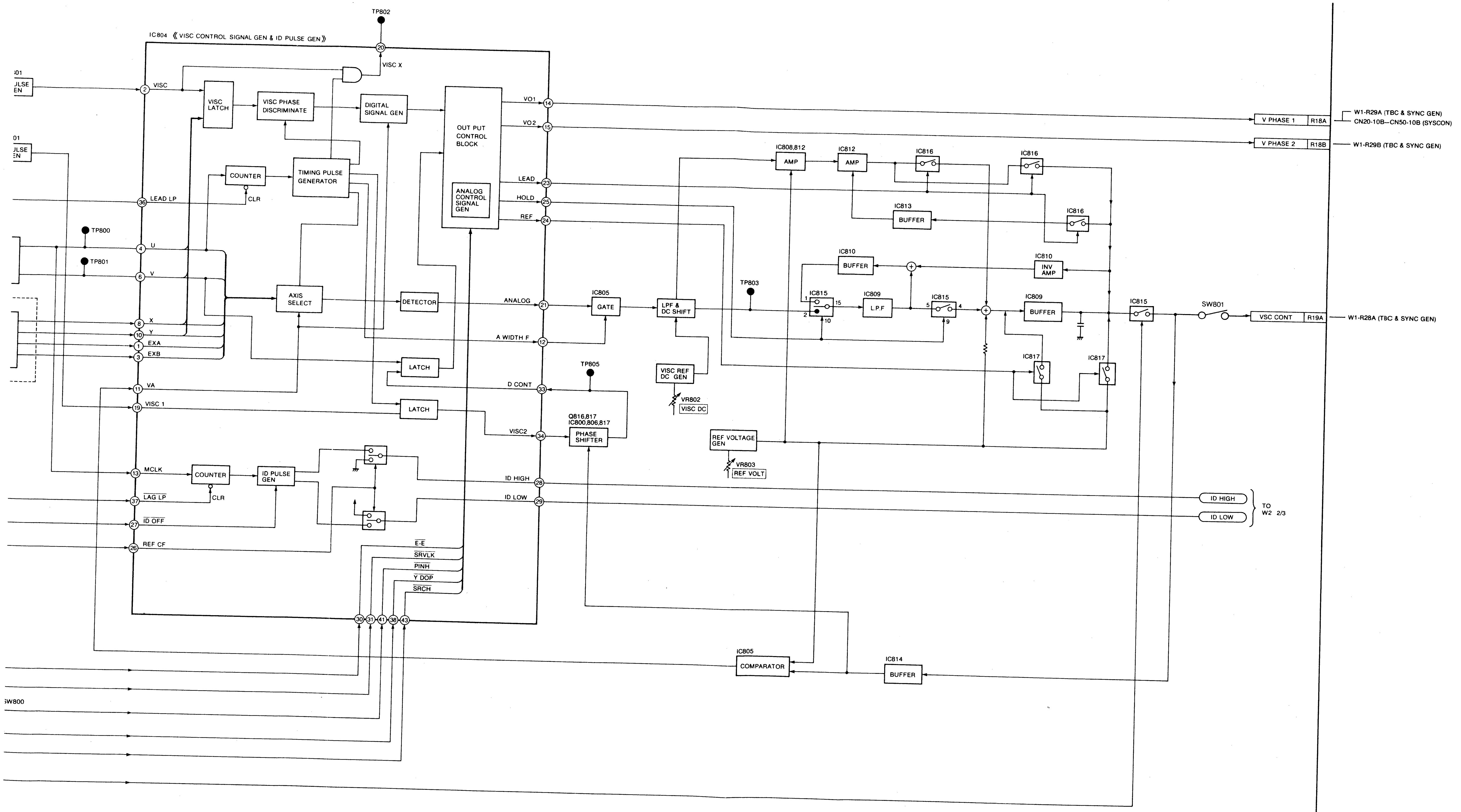
TP802
IC804 《VISC CONTROL SIGNAL GEN & ID PULSE GEN》
VISC X
VISC
VISC LATCH
VISC PHASE DISCRIMINATE
DIGITAL SIGNAL GEN
OUT PUT CONTROL BLOCK
ANALOG CONTROL SIGNAL GEN
COUNTER
CLR
TIMING PULSE GENERATOR
LEAD LP
TP800
TP801
U
V
X
Y
EXA
EXB
AXIS SELECT
DETECTOR
LATCH
LATCH
VA
VISC 1
MCLK
COUNTER
CLR
ID PULSE GEN
LAG LP
ID OFF
REF CF
E-E
SRVLK
PINH
Y DOP
SRCH
VO1
VO2
LEAD
HOLD
REF
ANALOG
A WIDTH F
D CONT
VISC2
ID HIGH
ID LOW
TP805
Q816,817 IC800,806,817
PHASE SHIFTER
IC805
GATE
LPF & DC SHIFT
VISC REF DC GEN
VR802
VISC DC
TP803
REF VOLTAGE GEN
VR803
REF VOLT
IC805
COMPARATOR
IC814
BUFFER
IC808,812
AMP
IC812
AMP
IC816
IC816
IC813
BUFFER
IC816
IC810
BUFFER
IC810
INV AMP
IC815
IC809
L.P.F
IC815
IC809
BUFFER
IC817
IC817
IC815
SW801
V PHASE 1
R18A
V PHASE 2
R18B
VSC CONT
R19A
W1-R29A (TBC & SYNC GEN)
CN20-10B—CN50-10B (SYSCON)
W1-R29B (TBC & SYNC GEN)
W1-R28A (TBC & SYNC GEN)
ID HIGH
ID LOW
TO W2 2/3
SW800
01
LSE
EN
01
LSE
N
2
14
15
23
25
24
21
12
33
34
28
29
36
4
6
8
10
1
3
11
19
13
37
27
26
30
31
41
38
43
20
1
2
15
10
5
4
9

REVERSE SIDE MOD & DI
BLOCK D

W3 (MOD & DEMOD) BLOCK DIAGRAM 1/3 (MODULATION SECTION)

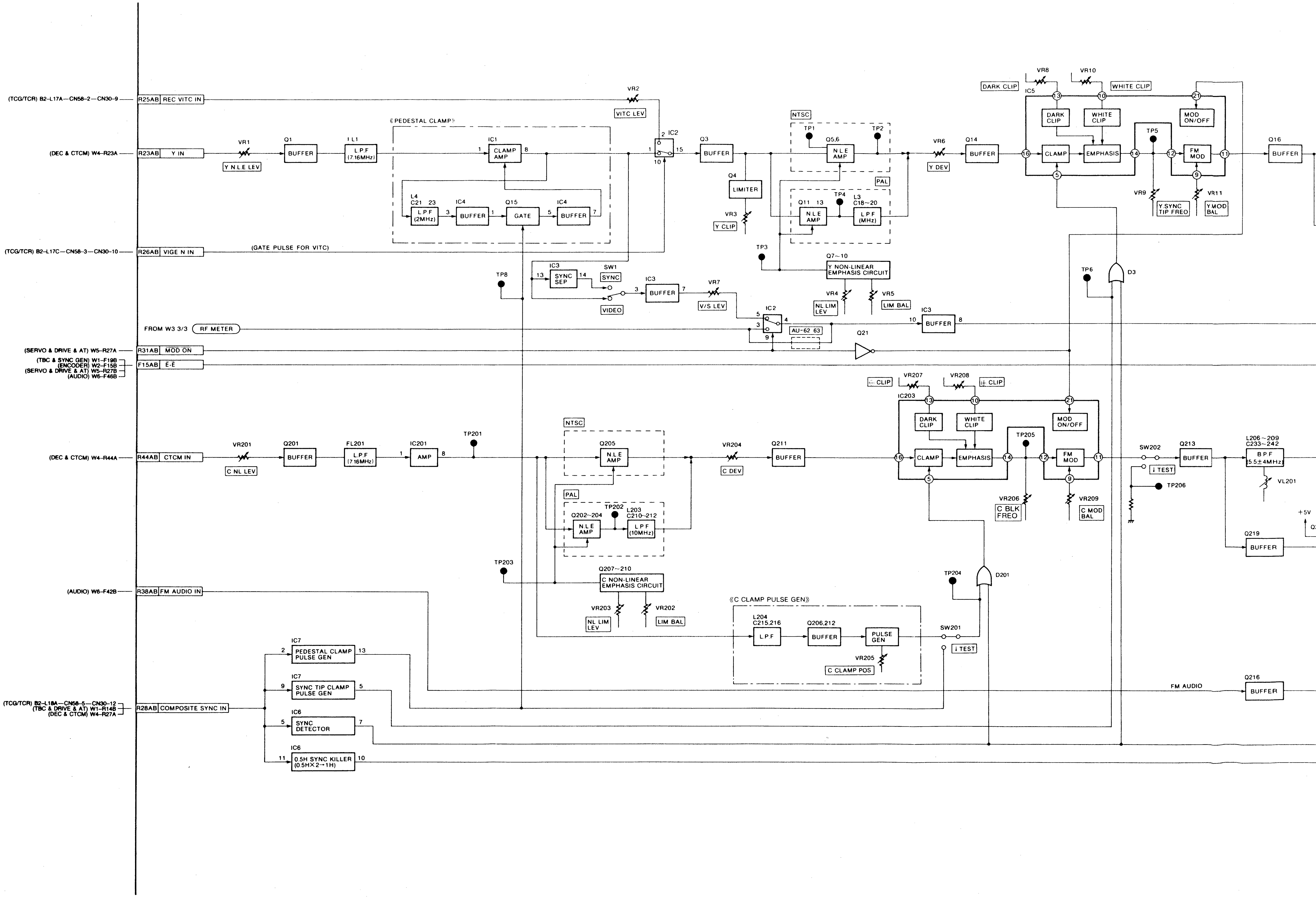

(TCG/TCR) B2–L17A—CN58–2—CN30–9
R25AB
REC VITC IN
(DEC & CTCM) W4–R23A
R23AB
Y IN
(TCG/TCR) B2–L17C—CN58–3—CN30–10
R26AB
VIGE N IN
(GATE PULSE FOR VITC)
FROM W3 3/3
RF METER
(SERVO & DRIVE & AT) W5–R27A
R31AB
MOD ON
(TBC & SYNC GEN) W1–F19B
(ENCODER) W2–F15B
(SERVO & DRIVE & AT) W5–R27B
(AUDIO) W6–F46B
F15AB
E-E
(DEC & CTCM) W4–R44A
R44AB
CTCM IN
(AUDIO) W6–F42B
R38AB
FM AUDIO IN
(TCG/TCR) B2–L18A—CN58–5—CN30–12
(TBC & DRIVE & AT) W1–R14B
(DEC & CTCM) W4–R27A
R28AB
COMPOSITE SYNC IN
VR1
Y N.L.E LEV
Q1
BUFFER
IL1
L.P.F (7.16MHz)
《PEDESTAL CLAMP》
IC1
CLAMP AMP
L4 C21 23
L.P.F (2MHz)
IC4
BUFFER
Q15
GATE
IC4
BUFFER
VR2
VITC LEV
IC2
Q3
BUFFER
Q4
LIMITER
VR3
Y CLIP
NTSC
TP1
Q5,6
N.L.E AMP
TP2
PAL
TP4
Q11 13
N.L.E AMP
L3 C18~20
L.P.F (MHz)
TP3
Q7~10
Y NON-LINEAR EMPHASIS CIRCUIT
VR4
NL LIM LEV
VR5
LIM BAL
TP8
IC3
SYNC SEP
SW1
SYNC
VIDEO
IC3
BUFFER
VR7
V/S LEV
IC2
AU-62 63
IC3
BUFFER
Q21
VR6
Y DEV
Q14
BUFFER
VR8
DARK CLIP
VR10
WHITE CLIP
IC5
DARK CLIP
WHITE CLIP
MOD ON/OFF
CLAMP
EMPHASIS
TP5
FM MOD
VR9
Y SYNC TIP FREO
VR11
Y MOD BAL
Q16
BUFFER
TP6
D3
VR201
C NL LEV
Q201
BUFFER
FL201
L.P.F (7.16MHz)
IC201
AMP
TP201
NTSC
Q205
N.L.E AMP
PAL
TP202
Q202~204
N.L.E AMP
L203 C210~212
L.P.F (10MHz)
TP203
Q207~210
C NON-LINEAR EMPHASIS CIRCUIT
VR203
NL LIM LEV
VR202
LIM BAL
VR204
C DEV
Q211
BUFFER
⊖ CLIP
VR207
VR208
⊕ CLIP
IC203
DARK CLIP
WHITE CLIP
MOD ON/OFF
CLAMP
EMPHASIS
TP205
FM MOD
VR206
C BLK FREO
VR209
C MOD BAL
SW202
↓ TEST
TP206
Q213
BUFFER
L206~209 C233~242
B.P.F (5.5±4MHz)
VL201
+5V
Q219
BUFFER
TP204
D201
《C CLAMP PULSE GEN》
L204 C215.216
L.P.F
Q206.212
BUFFER
PULSE GEN
VR205
C CLAMP POS
SW201
↓ TEST
IC7
PEDESTAL CLAMP PULSE GEN
IC7
SYNC TIP CLAMP PULSE GEN
IC6
SYNC DETECTOR
IC6
0.5H SYNC KILLER (0.5H×2→1H)
FM AUDIO
Q216
BUFFER

-OCK DIAGRAM 1/3 (MODULATION SECTION)

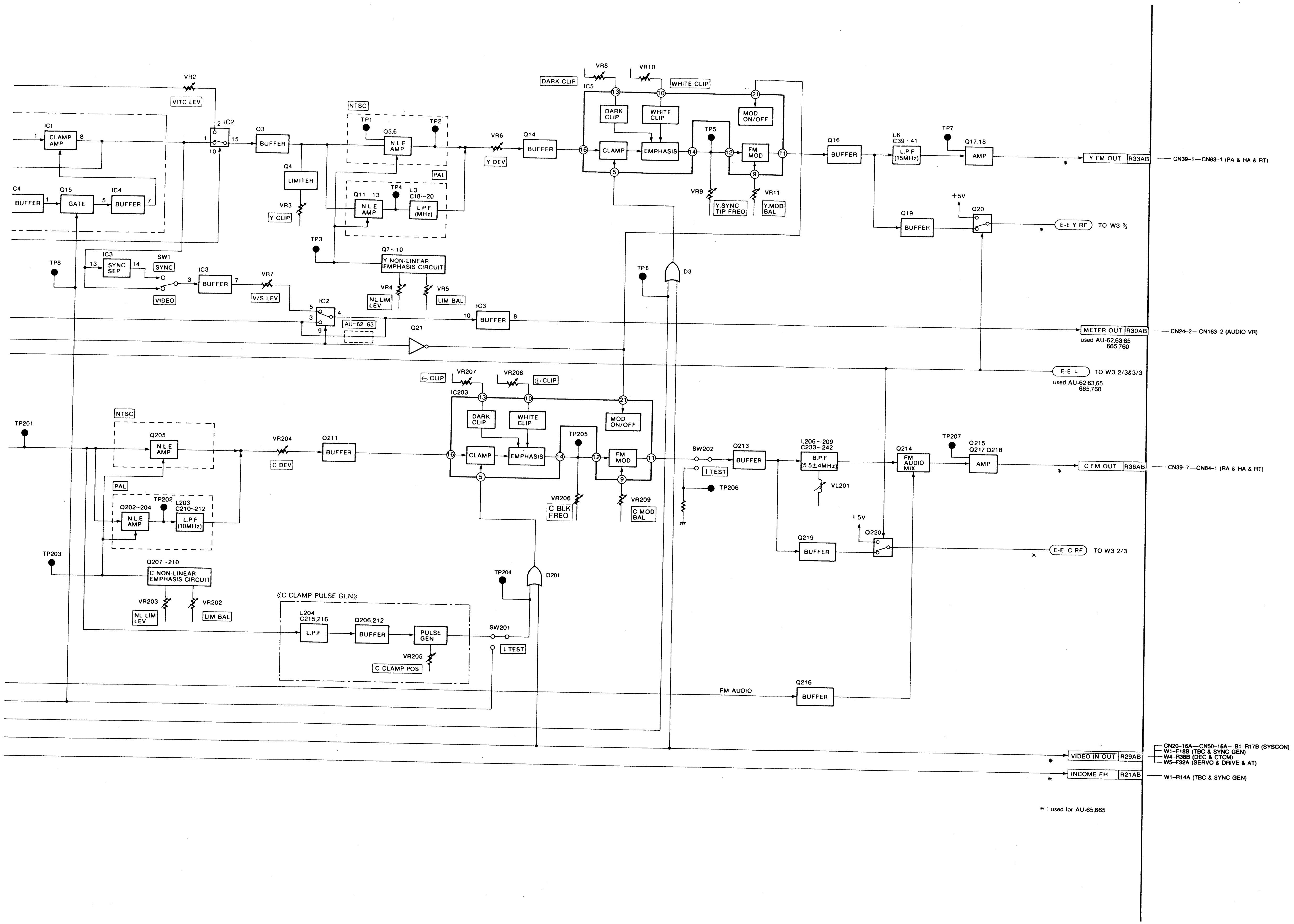
VR2
VITC LEV
IC1
CLAMP AMP
IC2
Q3
BUFFER
NTSC
TP1
Q5,6
TP2
NLE AMP
Q4
LIMITER
PAL
VR3
Y CLIP
TP4
L3 C18~20
Q11
NLE AMP
LPF (MHz)
C4
BUFFER
Q15
GATE
IC4
BUFFER
TP3
Q7~10
Y NON-LINEAR EMPHASIS CIRCUIT
VR4
NL LIM LEV
VR5
LIM BAL
TP8
IC3
SYNC SEP
SW1
SYNC
VIDEO
BUFFER
VR7
V/S LEV
AU-62 63
IC3
BUFFER
Q21
VR6
Y DEV
Q14
BUFFER
DARK CLIP
VR8
VR10
WHITE CLIP
IC5
DARK CLIP
WHITE CLIP
MOD ON/OFF
CLAMP
EMPHASIS
TP5
FM MOD
VR9
Y SYNC TIP FREQ
VR11
Y MOD BAL
TP6
D3
Q16
BUFFER
L6 C39・41
LPF (15MHz)
TP7
Q17,18
AMP
Y FM OUT R33AB
CN39-1—CN83-1 (PA & HA & RT)
+5V
Q19
BUFFER
Q20
E-E Y RF
TO W3 2/3
METER OUT R30AB
used AU-62,63,65 665,760
CN24-2—CN163-2 (AUDIO VR)
E-E L
TO W3 2/3&3/3
used AU-62,63,65 665,760
⊖ CLIP
VR207
VR208
⊕ CLIP
IC203
DARK CLIP
WHITE CLIP
MOD ON/OFF
CLAMP
EMPHASIS
TP205
FM MOD
VR206
C BLK FREQ
VR209
C MOD BAL
TP201
NTSC
Q205
NLE AMP
VR204
C DEV
Q211
BUFFER
PAL
TP202
Q202~204
L203 C210~212
NLE AMP
LPF (10MHz)
TP203
Q207~210
C NON-LINEAR EMPHASIS CIRCUIT
VR203
NL LIM LEV
VR202
LIM BAL
《C CLAMP PULSE GEN》
L204 C215,216
LPF
Q206,212
BUFFER
PULSE GEN
VR205
C CLAMP POS
SW201
↓ TEST
TP204
D201
SW202
↓ TEST
TP206
Q213
BUFFER
L206~209 C233~242
BPF (5.5±4MHz)
VL201
+5V
Q219
BUFFER
Q220
E-E C RF
TO W3 2/3
Q214
FM AUDIO MIX
TP207
Q215 Q217 Q218
AMP
C FM OUT R36AB
CN39-7—CN84-1 (RA & HA & RT)
FM AUDIO
Q216
BUFFER
VIDEO IN OUT R29AB
CN20-16A—CN50-16A—B1-R17B (SYSCON)
W1-F18B (TBC & SYNC GEN)
W4-R38B (DEC & CTCM)
W5-F32A (SERVO & DRIVE & AT)
INCOME FH R21AB
W1-R14A (TBC & SYNC GEN)
✱: used for AU-65,665

W3(MOD & DEMOD) BLOCK DIAGRAM 2/3 (C PLAYBACK SECTION)

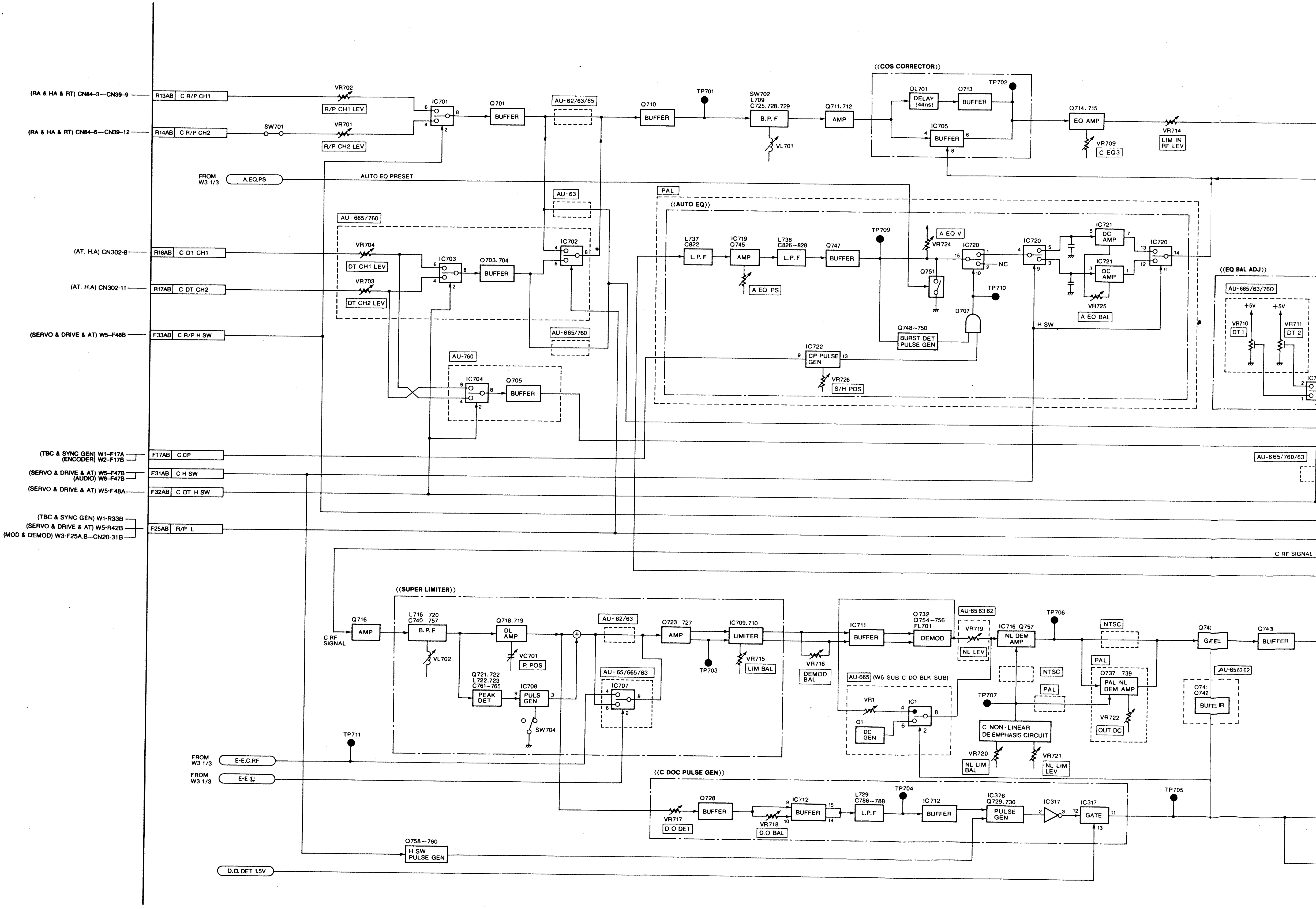
(RA & HA & RT) CN84-3—CN39-9
R13AB C R/P CH1
(RA & HA & RT) CN84-6—CN39-12
R14AB C R/P CH2
SW701
VR702
R/P CH1 LEV
VR701
R/P CH2 LEV
IC701
Q701
BUFFER
AU-62/63/65
Q710
BUFFER
TP701
SW702
L709
C725.728.729
B.P.F
VL701
Q711.712
AMP
((COS CORRECTOR))
DL701
DELAY (44ns)
Q713
BUFFER
TP702
IC705
BUFFER
Q714.715
EQ AMP
VR709
C EQ3
VR714
LIM IN RF LEV
FROM W3 1/3
A,EQ,PS
AUTO EQ PRESET
AU-63
AU-665/760
(AT. H.A) CN302-8
R16AB C DT CH1
(AT. H.A) CN302-11
R17AB C DT CH2
VR704
DT CH1 LEV
VR703
DT CH2 LEV
IC703
Q703.704
BUFFER
IC702
AU-665/760
(SERVO & DRIVE & AT) W5-F48B
F33AB C R/P H SW
AU-760
IC704
Q705
BUFFER
PAL
((AUTO EQ))
L737
C822
L.P.F
IC719
Q745
AMP
A EQ PS
L738
C826~828
L.P.F
Q747
BUFFER
TP709
A EQ V
VR724
Q751
IC720
NC
TP710
D707
Q748~750
BURST DET PULSE GEN
IC722
CP PULSE GEN
VR726
S/H POS
IC720
IC721
DC AMP
IC721
DC AMP
VR725
A EQ BAL
IC720
H SW
((EQ BAL ADJ))
AU-665/63/760
+5V
+5V
VR710
DT 1
VR711
DT 2
AU-665/760/63
(TBC & SYNC GEN) W1-F17A
(ENCODER) W2-F17B
F17AB C.CP
(SERVO & DRIVE & AT) W5-F47B
(AUDIO) W6-F47B
F31AB C H SW
(SERVO & DRIVE & AT) W5-F48A
F32AB C DT H SW
(TBC & SYNC GEN) W1-R33B
(SERVO & DRIVE & AT) W5-R42B
(MOD & DEMOD) W3-F25A.B—CN20-31B
F25AB R/P L
C RF SIGNAL
((SUPER LIMITER))
C RF SIGNAL
Q716
AMP
L716 720
C740 757
B.P.F
VL702
Q718.719
DL AMP
VC701
P. POS
Q721.722
L722.723
C761~765
PEAK DET
IC708
PULS GEN
SW704
AU-62/63
AU-65/665/63
IC707
Q723 727
AMP
TP703
IC709.710
LIMITER
VR715
LIM BAL
VR716
DEMOD BAL
IC711
BUFFER
Q732
Q754~756
FL701
DEMOD
AU-65,63,62
VR719
NL LEV
AU-665 (W6 SUB C DO BLK SUB)
VR1
IC1
Q1
DC GEN
IC716 Q757
NL DEM AMP
TP706
NTSC
NTSC
PAL
TP707
C NON-LINEAR DE EMPHASIS CIRCUIT
VR720
NL LIM BAL
VR721
NL LIM LEV
PAL
Q737 739
PAL NL DEM AMP
VR722
OUT DC
Q740
GATE
Q743
BUFFER
AU-65,63,62
Q741
Q742
BUFFER
TP711
FROM W3 1/3
E-E,C,RF
FROM W3 1/3
E-E Ⓛ
((C DOC PULSE GEN))
VR717
D.O DET
Q728
BUFFER
VR718
D.O BAL
IC712
BUFFER
L729
C786~788
L.P.F
TP704
IC712
BUFFER
IC376
Q729.730
PULSE GEN
IC317
IC317
GATE
TP705
Q758~760
H SW PULSE GEN
D.O. DET 1.5V

ᴎOD) BLOCK DIAGRAM 2/3 (C PLAYBACK SECTION)

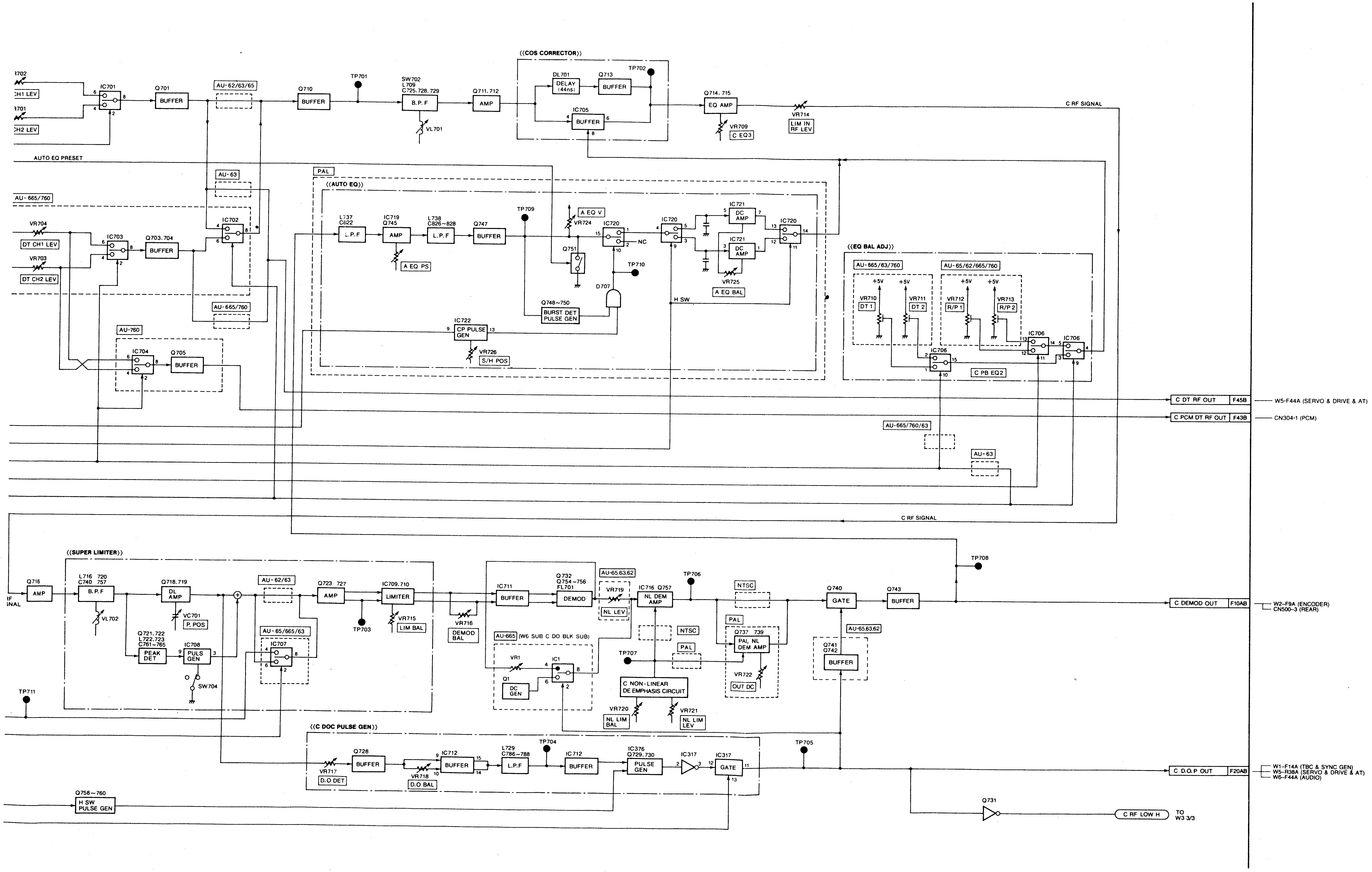
VR702
CH1 LEV
VR701
CH2 LEV
IC701
Q701
BUFFER
AU-62/63/65
Q710
BUFFER
TP701
SW702
L709
C725.728.729
B.P.F
VL701
Q711.712
AMP
((COS CORRECTOR))
DL701
DELAY (44ns)
Q713
BUFFER
TP702
IC705
BUFFER
Q714.715
EQ AMP
VR709
C EQ3
VR714
LIM IN RF LEV
C RF SIGNAL
AUTO EQ PRESET
AU-63
PAL
((AUTO EQ))
AU-665/760
VR704
DT CH1 LEV
VR703
DT CH2 LEV
IC703
Q703.704
BUFFER
IC702
L737
C622
L.P.F
IC719
Q745
AMP
A EQ PS
L738
C826~828
L.P.F
Q747
BUFFER
TP709
A EQ V
VR724
IC720
NC
Q751
TP710
D707
Q748~750
BURST DET PULSE GEN
IC721
DC AMP
VR725
A EQ BAL
H SW
IC722
CP PULSE GEN
VR726
S/H POS
AU-665/760
AU-760
IC704
Q705
BUFFER
((EQ BAL ADJ))
AU-665/63/760
AU-65/62/665/760
+5V
VR710
DT 1
VR711
DT 2
VR712
R/P 1
VR713
R/P 2
IC706
C PB EQ2
C DT RF OUT
F45B
W5-F44A (SERVO & DRIVE & AT)
C PCM DT RF OUT
F43B
CN304-1 (PCM)
AU-665/760/63
AU-63
C RF SIGNAL
((SUPER LIMITER))
RF SIGNAL
Q716
AMP
L716 720
C740 757
B.P.F
VL702
Q718.719
DL AMP
VC701
P. POS
Q721.722
L722.723
C761~765
PEAK DET
IC708
PULS GEN
SW704
AU-62/63
AU-65/665/63
IC707
Q723 727
AMP
TP703
IC709.710
LIMITER
VR715
LIM BAL
VR716
DEMOD BAL
IC711
BUFFER
Q732
Q754~756
FL701
DEMOD
AU-665 (W6 SUB C DO BLK SUB)
VR1
IC1
Q1
DC GEN
AU-65.63.62
VR719
NL LEV
TP706
IC716 Q757
NL DEM AMP
NTSC
PAL
TP707
C NON-LINEAR DE EMPHASIS CIRCUIT
VR720
NL LIM BAL
VR721
NL LIM LEV
Q737 739
PAL NL DEM AMP
VR722
OUT DC
Q740
GATE
Q743
BUFFER
AU-65.63.62
Q741
Q742
BUFFER
TP708
C DEMOD OUT
F10AB
W2-F9A (ENCODER)
CN500-3 (REAR)
TP711
((C DOC PULSE GEN))
VR717
D.O DET
Q728
BUFFER
VR718
D.O BAL
IC712
BUFFER
L729
C786~788
L.P.F
TP704
IC712
BUFFER
IC376
Q729.730
PULSE GEN
IC317
IC317
GATE
TP705
C D.O.P OUT
F20AB
W1-F14A (TBC & SYNC GEN)
W5-R38A (SERVO & DRIVE & AT)
W6-F44A (AUDIO)
Q731
C RF LOW H
TO W3 3/3
Q758~760
H SW PULSE GEN

W3(MOD & DEMOD) BLOCK DIAGRAM 3/3 (Y PLAYBACK SECTION)

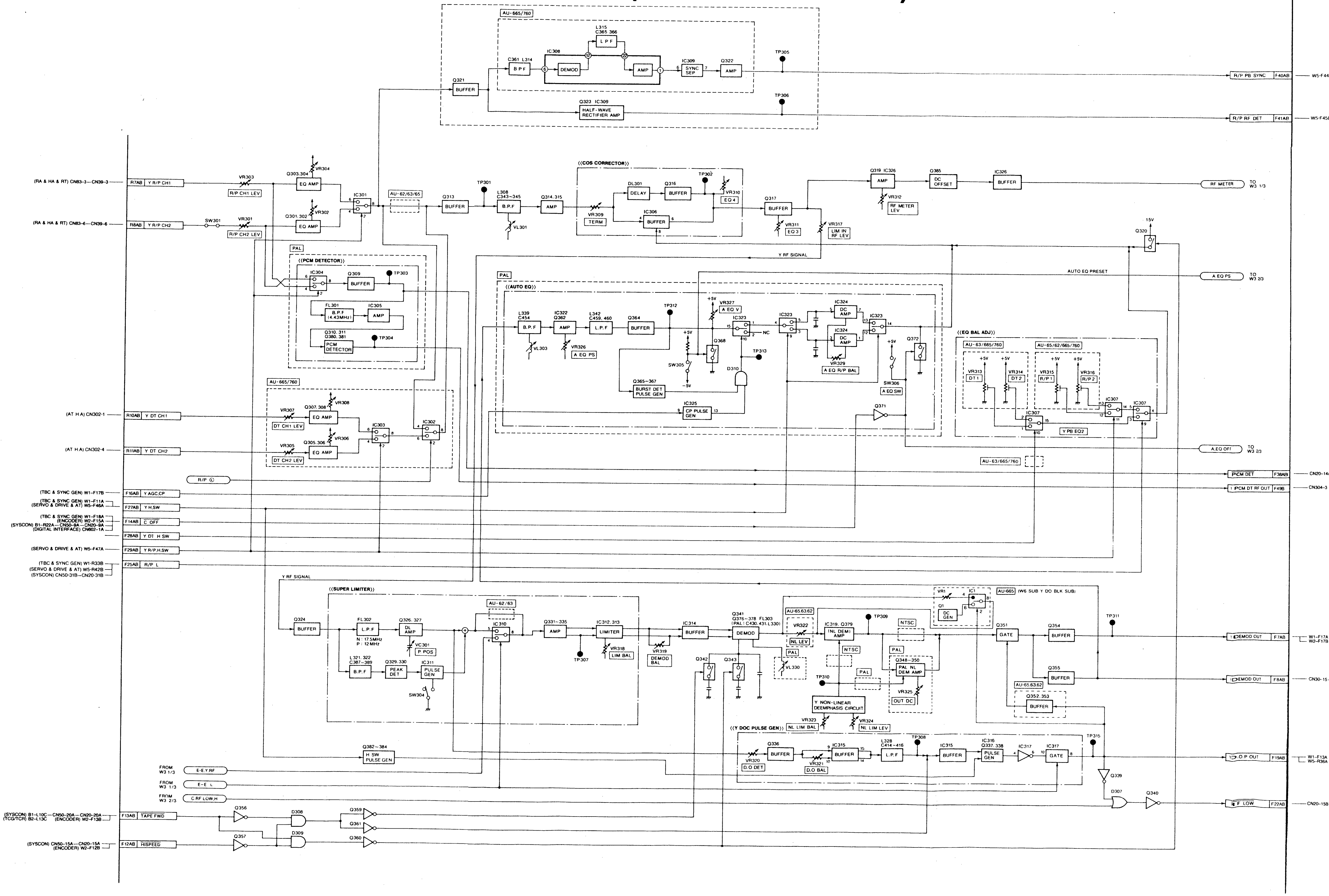

AU-665/760
L315 C365 366
L P F
C361 L314
B P F
IC308
DEMOD
AMP
IC309
SYNC SEP
Q322
AMP
TP305
Q321
BUFFER
Q323 IC309
HALF-WAVE RECTIFIER AMP
TP306
R/P PB SYNC
F40AB
W5-F44
R/P RF DET
F41AB
W5-F45
(RA & HA & RT) CN83-3—CN39-3
R7AB
Y R/P CH1
(RA & HA & RT) CN83-6—CN39-6
R8AB
Y R/P CH2
SW301
VR303
R/P CH1 LEV
VR301
R/P CH2 LEV
Q303,304
EQ AMP
VR304
Q301,302
EQ AMP
VR302
IC301
AU-62/63/65
Q313
BUFFER
TP301
L308 C343~345
B.P.F
VL301
Q314,315
AMP
((COS CORRECTOR))
DL301
DELAY
Q316
BUFFER
TP302
VR310
EQ 4
VR309
TERM
IC306
BUFFER
Q317
BUFFER
VR311
EQ 3
VR317
LIM IN RF LEV
Q319 IC326
AMP
VR312
RF METER LEV
Q385
DC OFFSET
IC326
BUFFER
RF METER
TO W3 1/3
Y RF SIGNAL
15V
Q320
AUTO EQ PRESET
A EQ PS
TO W3 2/3
PAL
((PCM DETECTOR))
IC304
Q309
BUFFER
TP303
FL301
B.P.F (4.43MHz)
IC305
AMP
Q310,311 Q380,381
PCM DETECTOR
TP304
((AUTO EQ))
L339 C454
B.P.F
VL303
IC322 Q362
AMP
VR326
A EQ PS
L342 C459,460
L.P.F
Q364
BUFFER
TP312
+5V
VR327
A EQ V
IC323
NC
Q368
SW305
-5V
D310
TP313
Q365~367
BURST DET PULSE GEN
IC325
CP PULSE GEN
IC324
DC AMP
VR329
A EQ R/P BAL
Q372
SW306
A EQ SW
Q371
((EQ BAL ADJ))
AU-63/665/760
AU-65/62/665/760
VR313
DT 1
VR314
DT 2
VR315
R/P 1
VR316
R/P 2
IC307
Y PB EQ2
A EQ OFF
TO W3 2/3
AU-63/665/760
AU-665/760
VR307
DT CH1 LEV
Q307,308
EQ AMP
VR308
IC303
IC302
VR305
DT CH2 LEV
Q305,306
EQ AMP
VR306
(AT H.A) CN302-1
R10AB
Y DT CH1
(AT H.A) CN302-4
R11AB
Y DT CH2
R/P ©
PCM DET
F38AB
CN20-14
PCM DT RF OUT
F49B
CN304-3
(TBC & SYNC GEN) W1-F17B
F16AB
Y AGC.CP
(TBC & SYNC GEN) W1-F11A
(SERVO & DRIVE & AT) W5-F46A
F27AB
Y H.SW
(TBC & SYNC GEN) W1-F18A
(ENCODER) W2-F15A
(SYSCON) B1-R22A—CN50-9A—CN20-9A
(DIGITAL INTERFACE) CN602-1A
F14AB
C OFF
F28AB
Y DT H SW
(SERVO & DRIVE & AT) W5-F47A
F29AB
Y R/P,H.SW
(TBC & SYNC GEN) W1-R33B
(SERVO & DRIVE & AT) W5-R42B
(SYSCON) CN50-31B—CN20-31B
F25AB
R/P L
Y RF SIGNAL
((SUPER LIMITER))
Q324
BUFFER
FL302
L.P.F
N: 17.5MHz
P: 12MHz
Q326,327
DL AMP
VC301
P POS
L321,322 C387~389
B.P.F
Q329,330
PEAK DET
IC311
PULSE GEN
SW304
AU-62/63
IC310
Q331~335
AMP
TP307
IC312,313
LIMITER
VR318
LIM BAL
IC314
BUFFER
VR319
DEMOD BAL
Q341 Q376~378 FL303
(PAL: C430,431,L330)
DEMOD
Q342
Q343
AU-65,63,62
VR322
NL LEV
VR330
IC319,Q379
INL DEM AMP
TP309
NTSC
PAL
Q348~350
PAL NL DEM AMP
VR325
OUT DC
TP310
Y NON-LINEAR DEEMPHASIS CIRCUIT
VR323
NL LIM BAL
VR324
NL LIM LEV
VR1
IC1
Q1
DC GEN
AU-665
(W6 SUB Y DO BLK SUB)
Q351
GATE
Q354
BUFFER
TP311
Q355
BUFFER
AU-65,63,62
Q352,353
BUFFER
DEMOD OUT
F7AB
W1-F17A
W2-F17B
DEMOD OUT
F8AB
CN30-15
((Y DOC PULSE GEN))
Q336
BUFFER
VR320
D.O DET
VR321
D.O BAL
IC315
BUFFER
L328 C414~416
L.P.F
TP308
IC315
BUFFER
IC316 Q337,338
PULSE GEN
IC317
IC317
GATE
TP315
Q339
D.O.P OUT
F19AB
W1-F13A
W5-R36A
D307
Q340
F LOW
F22AB
CN20-15B
Q382~384
H SW PULSE GEN
FROM W3 1/3
E-E Y RF
FROM W3 1/3
E-E L
FROM W3 2/3
C RF LOW H
(SYSCON) B1-L10C—CN50-20A—CN20-20A
(TCG/TCR) B2-L13C (ENCODER) W2-F13B
F13AB
TAPE FWD
Q356
D308
Q359
Q361
Q357
D309
Q360
(SYSCON) CN50-15A—CN20-15A
(ENCODER) W2-F12B
F12AB
HISPEED

IAGRAM 3/3 (Y PLAYBACK SECTION)

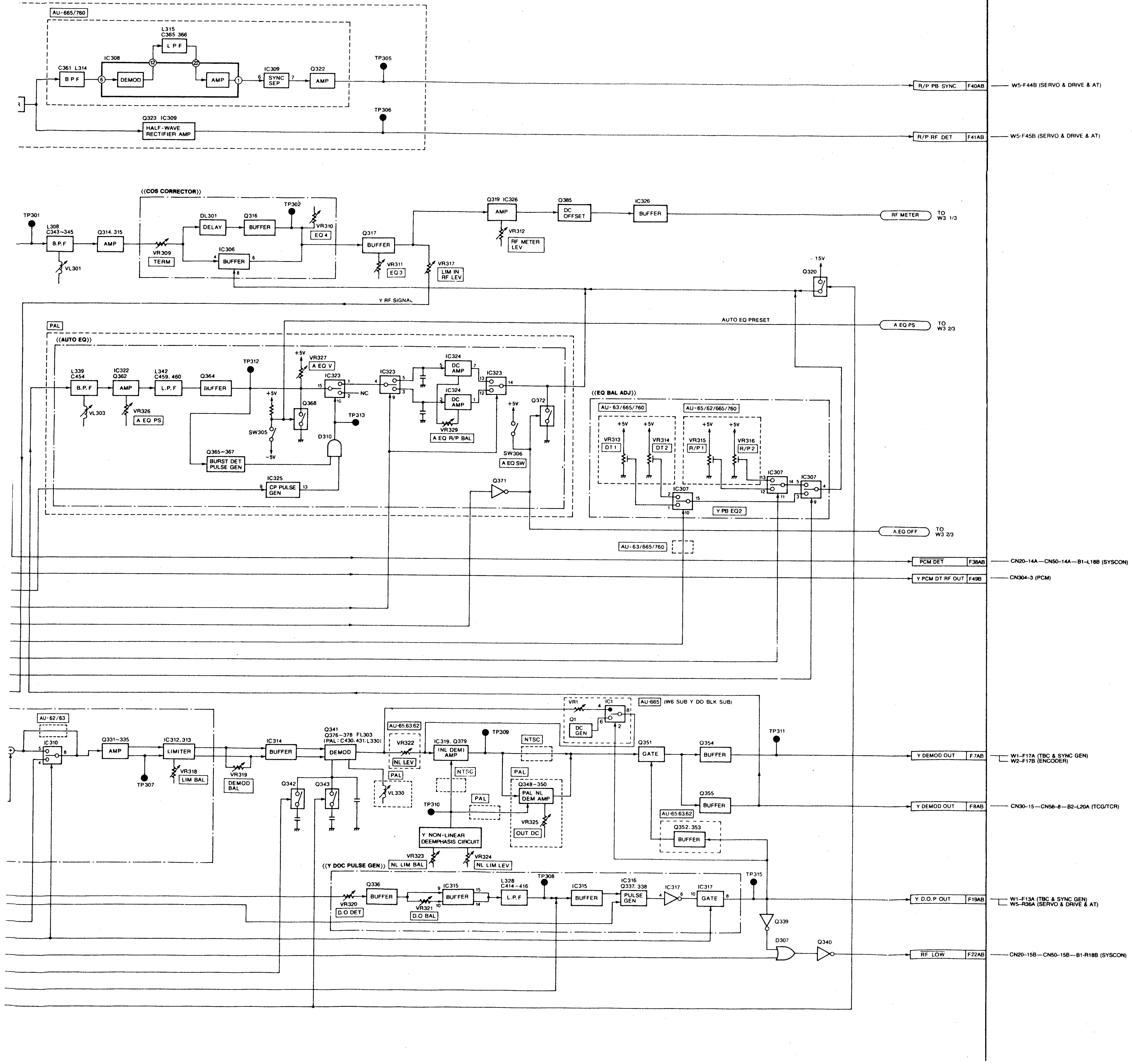
AU-665/760
L315
C365.366
L P F
IC308
C361 L314
B P F
DEMOD
AMP
IC309
SYNC SEP
Q322
AMP
TP305
TP306
Q323 IC309
HALF-WAVE RECTIFIER AMP
R/P PB SYNC
F40AB
W5-F44B (SERVO & DRIVE & AT)
R/P RF DET
F41AB
W5-F45B (SERVO & DRIVE & AT)
((COS CORRECTOR))
TP301
L308
C343~345
B.P.F
VL301
Q314.315
AMP
VR309
TERM
DL301
DELAY
Q316
BUFFER
IC306
BUFFER
TP302
VR310
EQ 4
Q317
BUFFER
VR311
EQ 3
VR317
LIM IN RF LEV
Q319 IC326
AMP
VR312
RF METER LEV
Q385
DC OFFSET
IC326
BUFFER
RF METER
TO W3 1/3
Y RF SIGNAL
-15V
Q320
AUTO EQ PRESET
A EQ PS
TO W3 2/3
PAL
((AUTO EQ))
L339
C454
B.P.F
VL303
IC322
Q362
AMP
VR326
A EQ PS
L342
C459.460
L.P.F
Q364
BUFFER
TP312
+5V
VR327
A EQ V
IC323
NC
Q368
SW305
-5V
TP313
D310
Q365~367
BURST DET PULSE GEN
IC325
CP PULSE GEN
IC324
DC AMP
VR329
A EQ R/P BAL
SW306
A EQ SW
Q372
Q371
((EQ BAL ADJ))
AU-63/665/760
AU-65/62/665/760
VR313
DT 1
VR314
DT 2
VR315
R/P 1
VR316
R/P 2
IC307
Y PB EQ2
A.EQ OFF
TO W3 2/3
AU-63/665/760
PCM DET
F38AB
CN20-14A—CN50-14A—B1-L16B (SYSCON)
Y PCM DT RF OUT
F49B
CN304-3 (PCM)
AU-62/63
IC310
Q331~335
AMP
TP307
IC312.313
LIMITER
VR318
LIM BAL
VR319
DEMOD BAL
IC314
BUFFER
Q341
Q376~378 FL303
(PAL: C430.431.L330)
DEMOD
Q342
Q343
AU-65.63.62
VR322
NL LEV
PAL
VL330
IC319. Q379
(NL DEM) AMP
TP309
NTSC
TP310
Y NON-LINEAR DEEMPHASIS CIRCUIT
VR323
NL LIM BAL
VR324
NL LIM LEV
Q348~350
PAL NL DEM AMP
VR325
OUT DC
VR1
IC1
Q1
DC GEN
AU-665 (W6 SUB Y DO BLK SUB)
Q351
GATE
Q354
BUFFER
Q355
BUFFER
AU-65.63.62
Q352.353
BUFFER
TP311
Y DEMOD OUT
F7AB
W1-F17A (TBC & SYNC GEN)
W2-F17B (ENCODER)
Y DEMOD OUT
F8AB
CN30-15—CN58-8—B2-L20A (TCG/TCR)
((Y DOC PULSE GEN))
VR320
D.O DET
Q336
BUFFER
VR321
D.O BAL
IC315
BUFFER
L328
C414~416
L.P.F
TP308
IC315
BUFFER
IC316
Q337.338
PULSE GEN
IC317
IC317
GATE
TP315
Q339
D307
Q340
Y D.O.P OUT
F19AB
W1-F13A (TBC & SYNC GEN)
W5-R36A (SERVO & DRIVE & AT)
RF LOW
F22AB
CN20-15B—CN50-15B—B1-R18B (SYSCON)

W4 (DEC & CTCM) BLOCK DIAGRAM 1/4 (CHROMA SEP SECTION)[FOR AU-65, AU-665 (NTSC)]

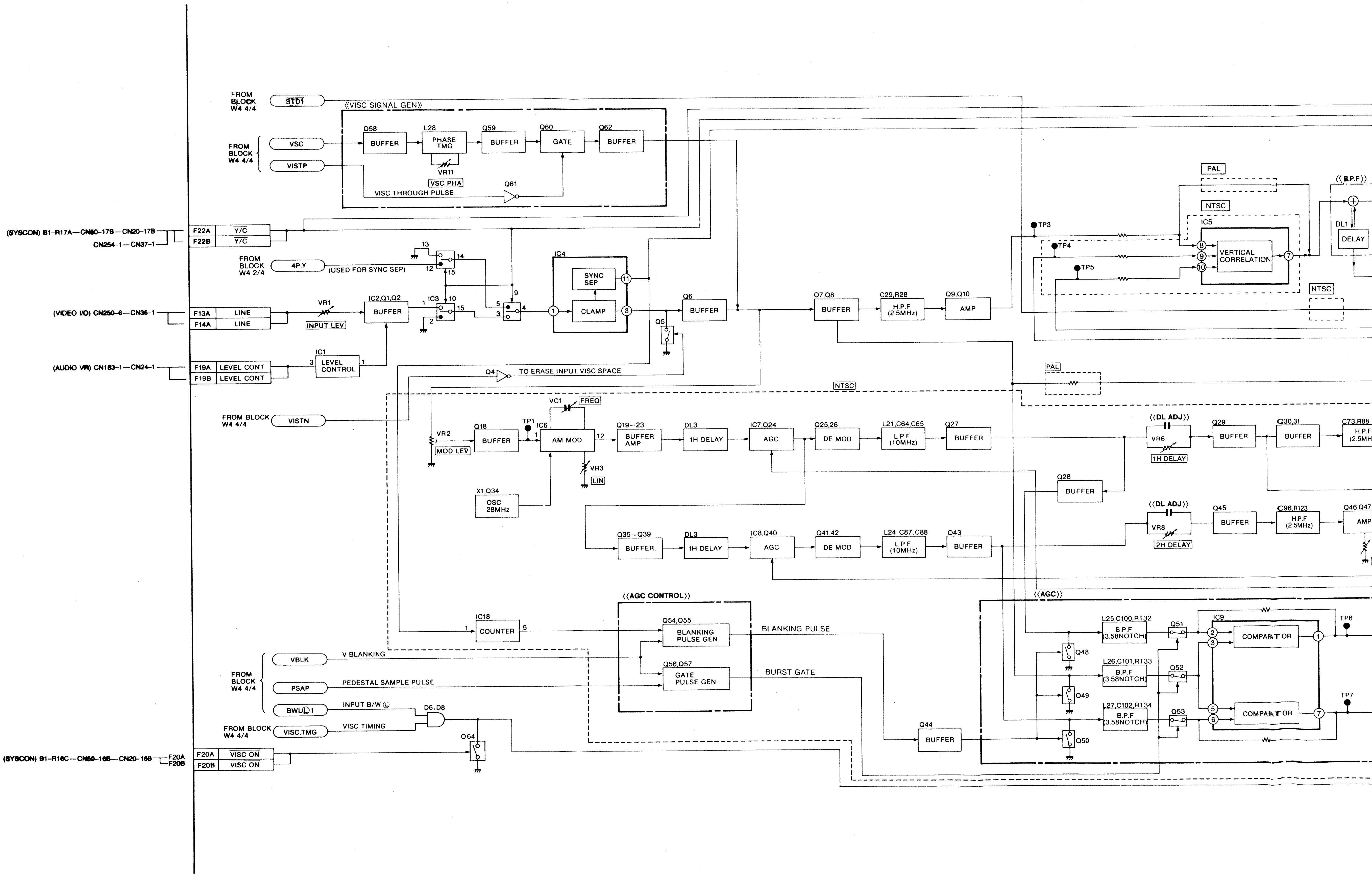
FROM BLOCK W4 4/4
STD1
《VISC SIGNAL GEN》
FROM BLOCK W4 4/4
VSC
VISTP
Q58
BUFFER
L28
PHASE TMG
VR11
VSC PHA
Q59
BUFFER
Q60
GATE
Q62
BUFFER
Q61
VISC THROUGH PULSE
(SYSCON) B1–R17A—CN50–17B—CN20–17B
CN254–1—CN37–1
F22A
Y/C
F22B
Y/C
FROM BLOCK W4 2/4
4P.Y
(USED FOR SYNC SEP)
13
14
12
15
9
5
4
3
IC4
SYNC SEP
CLAMP
11
1
3
(VIDEO I/O) CN250–6—CN36–1
F13A
LINE
F14A
LINE
VR1
INPUT LEV
IC2,Q1,Q2
BUFFER
IC3
10
15
2
Q6
BUFFER
Q5
Q7,Q8
BUFFER
C29,R28
H.P.F (2.5MHz)
Q9,Q10
AMP
TP3
TP4
TP5
PAL
NTSC
IC5
8
9
10
VERTICAL CORRELATION
7
《B.P.F》
DL1
DELAY
NTSC
(AUDIO VR) CN163–1—CN24–1
F19A
LEVEL CONT
F19B
LEVEL CONT
IC1
3
LEVEL CONTROL
1
Q4
TO ERASE INPUT VISC SPACE
PAL
NTSC
FROM BLOCK W4 4/4
VISTN
VC1
FREQ
VR2
MOD LEV
Q18
BUFFER
TP1
IC6
1
AM MOD
12
VR3
LIN
Q19~23
BUFFER AMP
DL3
1H DELAY
IC7,Q24
AGC
Q25,26
DE MOD
L21,C64,C65
L.P.F. (10MHz)
Q27
BUFFER
《DL ADJ》
VR6
1H DELAY
Q29
BUFFER
Q30,31
BUFFER
C73,R88
H.P.F (2.5MH
X1,Q34
OSC 28MHz
Q28
BUFFER
《DL ADJ》
VR8
2H DELAY
Q45
BUFFER
C96,R123
H.P.F (2.5MHz)
Q46,Q47
AMP
Q35~Q39
BUFFER
DL3
1H DELAY
IC8,Q40
AGC
Q41,42
DE MOD
L24 C87,C88
L.P.F. (10MHz)
Q43
BUFFER
《AGC CONTROL》
IC18
1
COUNTER
5
Q54,Q55
BLANKING PULSE GEN.
BLANKING PULSE
Q56,Q57
GATE PULSE GEN
BURST GATE
《AGC》
L25,C100,R132
B.P.F (3.58NOTCH)
Q51
IC9
2
3
COMPARATOR
1
TP6
Q48
L26,C101,R133
B.P.F (3.58NOTCH)
Q52
Q49
L27,C102,R134
B.P.F (3.58NOTCH)
Q53
5
6
COMPARATOR
7
TP7
Q50
Q44
BUFFER
FROM BLOCK W4 4/4
VBLK
V BLANKING
PSAP
PEDESTAL SAMPLE PULSE
BWLⓁ1
INPUT B/W Ⓛ
D6, D8
FROM BLOCK W4 4/4
VISC,TMG
VISC TIMING
Q64
(SYSCON) B1–R16C—CN50–16B—CN20–16B
F20A
F20B
F20A
VISC ON
F20B
VISC ON

BLOCK DIAGRAM 1/4 (CHROMA SEP SECTION)[FOR AU-65, AU-665 (NTSC)]

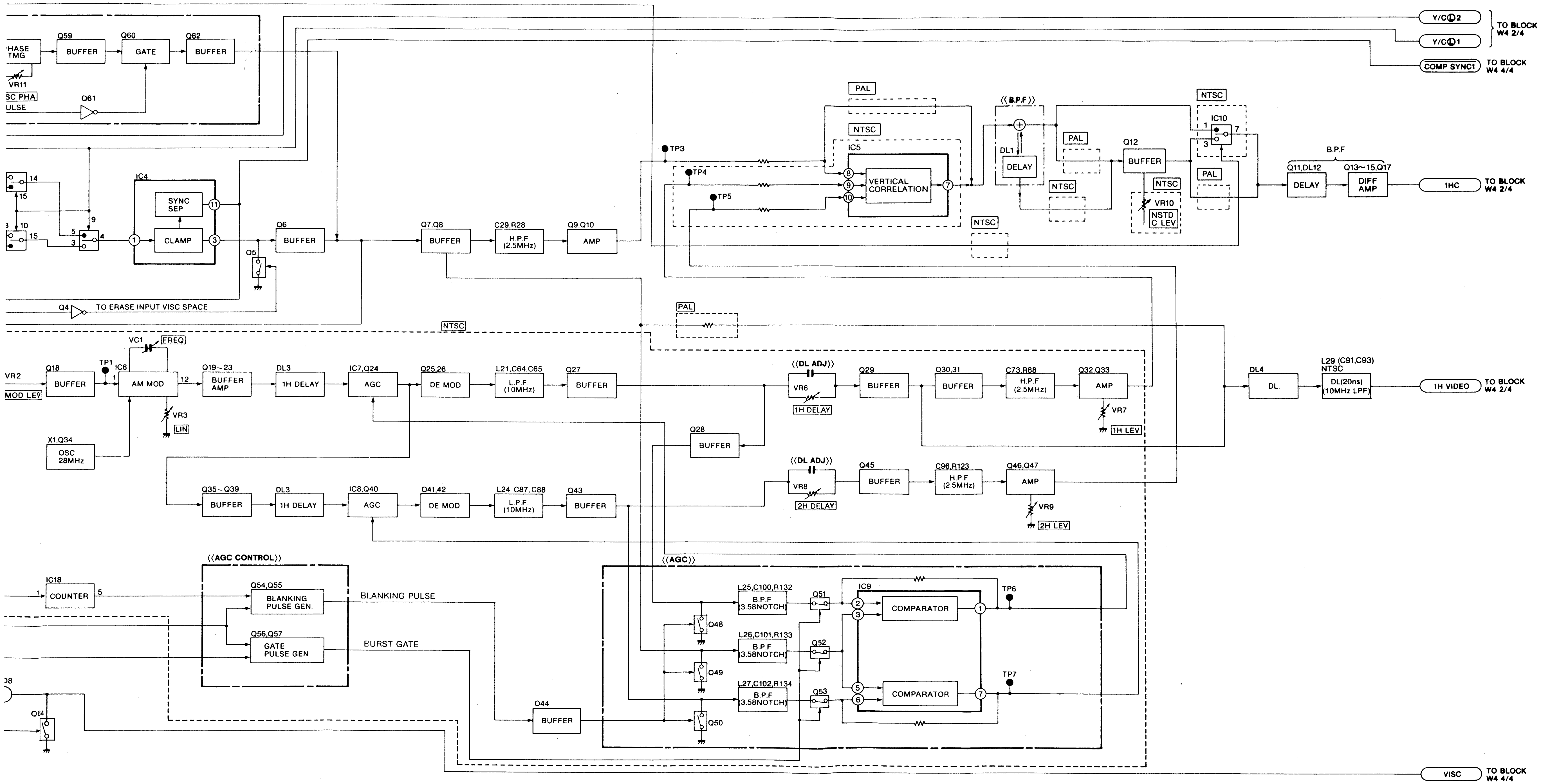
HASE
TMG
Q59
BUFFER
Q60
GATE
Q62
BUFFER
VR11
SC PHA
ULSE
Q61
14
15
10
15
5
3
9
4
IC4
SYNC SEP
CLAMP
1
3
11
Q5
Q6
BUFFER
Q4
TO ERASE INPUT VISC SPACE
Q7,Q8
BUFFER
C29,R28
H.P.F (2.5MHz)
Q9,Q10
AMP
TP3
TP4
TP5
PAL
NTSC
IC5
8
9
10
VERTICAL CORRELATION
7
NTSC
((B.P.F))
DL1
DELAY
PAL
NTSC
Q12
BUFFER
NTSC
VR10
NSTD C LEV
NTSC
IC10
1
3
7
PAL
B.P.F
Q11,DL12
DELAY
Q13~15,Q17
DIFF AMP
Y/C2
Y/C1
TO BLOCK W4 2/4
COMP SYNC1
TO BLOCK W4 4/4
1HC
TO BLOCK W4 2/4
NTSC
PAL
VC1
FREQ
VR2
MOD LEV
Q18
BUFFER
TP1
IC6
1
AM MOD
12
VR3
LIN
X1,Q34
OSC 28MHz
Q19~23
BUFFER AMP
DL3
1H DELAY
IC7,Q24
AGC
Q25,26
DE MOD
L21,C64,C65
L.P.F. (10MHz)
Q27
BUFFER
((DL ADJ))
VR6
1H DELAY
Q29
BUFFER
Q30,31
BUFFER
C73,R88
H.P.F (2.5MHz)
Q32,Q33
AMP
VR7
1H LEV
Q28
BUFFER
DL4
DL.
L29 (C91,C93)
NTSC
DL(20ns) (10MHz LPF)
1H VIDEO
TO BLOCK W4 2/4
Q35~Q39
BUFFER
DL3
1H DELAY
IC8,Q40
AGC
Q41,42
DE MOD
L24 C87,C88
L.P.F. (10MHz)
Q43
BUFFER
((DL ADJ))
VR8
2H DELAY
Q45
BUFFER
C96,R123
H.P.F (2.5MHz)
Q46,Q47
AMP
VR9
2H LEV
((AGC CONTROL))
IC18
1
COUNTER
5
Q54,Q55
BLANKING PULSE GEN.
Q56,Q57
GATE PULSE GEN
BLANKING PULSE
BURST GATE
Q8
Q64
Q44
BUFFER
((AGC))
L25,C100,R132
B.P.F (3.58NOTCH)
L26,C101,R133
B.P.F (3.58NOTCH)
L27,C102,R134
B.P.F (3.58NOTCH)
Q48
Q49
Q50
Q51
Q52
Q53
IC9
2
3
COMPARATOR
1
5
6
COMPARATOR
7
TP6
TP7
VISC
TO BLOCK W4 4/4

W4 (DEC & CTCM) BLOCK DIAGRAM 2/4 (Y,PB,PR DECODER SECTION)[FOR AU-65, AU-665 (NTSC)]

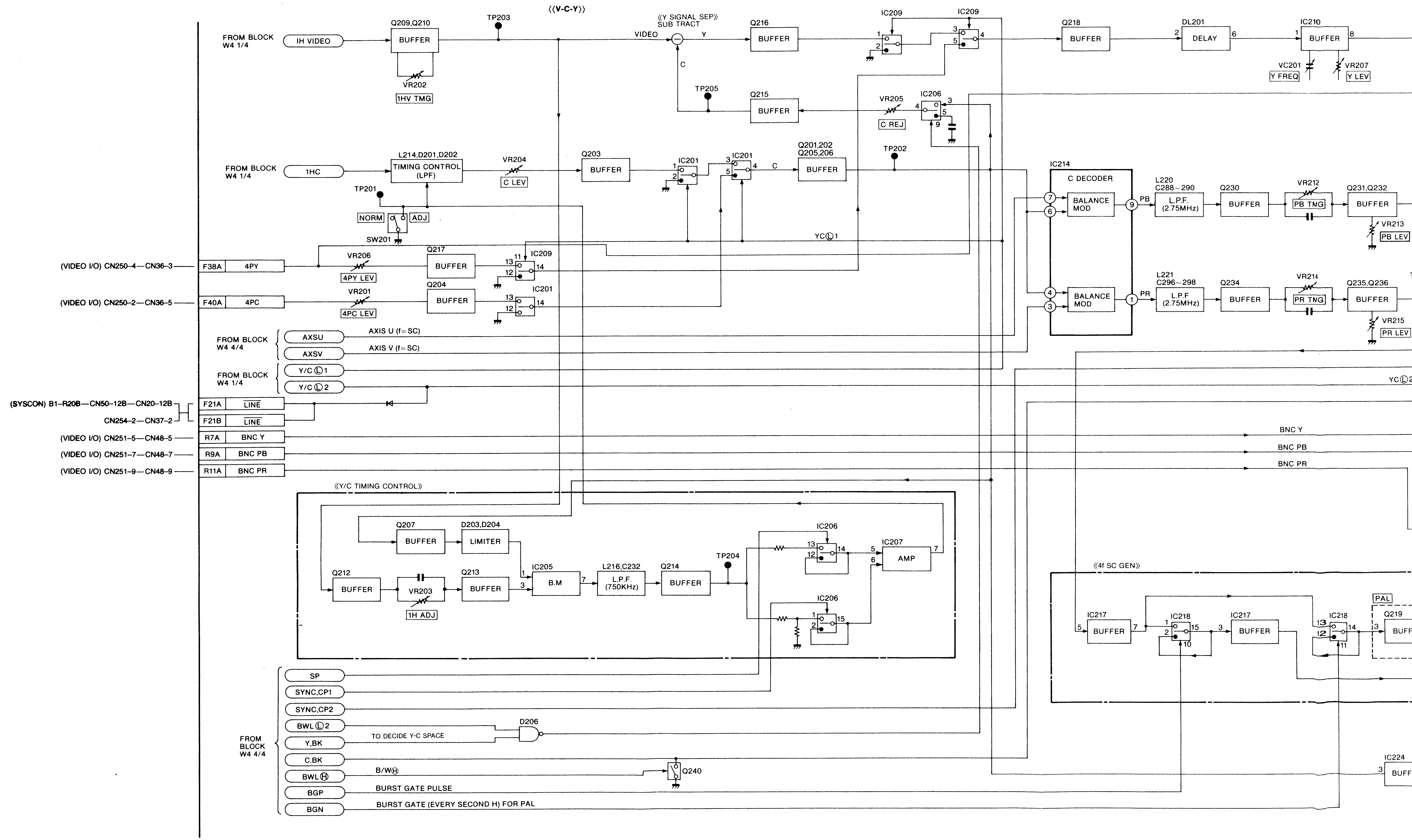

《V-C-Y》
FROM BLOCK W4 1/4
IH VIDEO
Q209,Q210
BUFFER
VR202
1HV TMG
TP203
《Y SIGNAL SEP》 SUB TRACT
VIDEO
Y
C
Q216
BUFFER
IC209
IC209
Q218
BUFFER
DL201
DELAY
IC210
BUFFER
VC201
Y FREQ
VR207
Y LEV
TP205
Q215
BUFFER
VR205
C REJ
IC206
FROM BLOCK W4 1/4
1HC
L214,D201,D202
TIMING CONTROL (LPF)
VR204
C LEV
Q203
BUFFER
IC201
IC201
Q201,202 Q205,206
BUFFER
TP202
TP201
NORM
ADJ
SW201
YCⓁ1
IC214
C DECODER
BALANCE MOD
BALANCE MOD
PB
PR
L220 C288~290
L.P.F. (2.75MHz)
Q230
BUFFER
VR212
PB TNG
Q231,Q232
BUFFER
VR213
PB LEV
L221 C296~298
L.P.F (2.75MHz)
Q234
BUFFER
VR214
PR TNG
Q235,Q236
BUFFER
VR215
PR LEV
(VIDEO I/O) CN250–4—CN36–3
F38A
4PY
VR206
4PY LEV
Q217
BUFFER
IC209
(VIDEO I/O) CN250–2—CN36–5
F40A
4PC
VR201
4PC LEV
Q204
BUFFER
IC201
FROM BLOCK W4 4/4
AXSU
AXSV
AXIS U (f=SC)
AXIS V (f=SC)
FROM BLOCK W4 1/4
Y/C Ⓛ1
Y/C Ⓛ2
YCⓁ2
(SYSCON) B1–R20B—CN50–12B—CN20–12B
CN254–2—CN37–2
F21A
LINE
F21B
LINE
(VIDEO I/O) CN251–5—CN48–5
R7A
BNC Y
(VIDEO I/O) CN251–7—CN48–7
R9A
BNC PB
(VIDEO I/O) CN251–9—CN48–9
R11A
BNC PR
BNC Y
BNC PB
BNC PR
《Y/C TIMING CONTROL》
Q207
BUFFER
D203,D204
LIMITER
Q212
BUFFER
VR203
1H ADJ
Q213
BUFFER
IC205
B.M
L216,C232
L.P.F. (750KHz)
Q214
BUFFER
TP204
IC206
IC206
IC207
AMP
《4f SC GEN》
IC217
BUFFER
IC218
IC217
BUFFER
IC218
PAL
Q219
BUFF
IC224
BUFF
FROM BLOCK W4 4/4
SP
SYNC,CP1
SYNC,CP2
BWL Ⓛ2
Y,BK
C.BK
BWL Ⓗ
BGP
BGN
D206
TO DECIDE Y-C SPACE
B/WⒽ
Q240
BURST GATE PULSE
BURST GATE (EVERY SECOND H) FOR PAL

AM 2/4 (Y,P_B,P_R DECODER SECTION) [FOR AU-65, AU-665 (NTSC)]

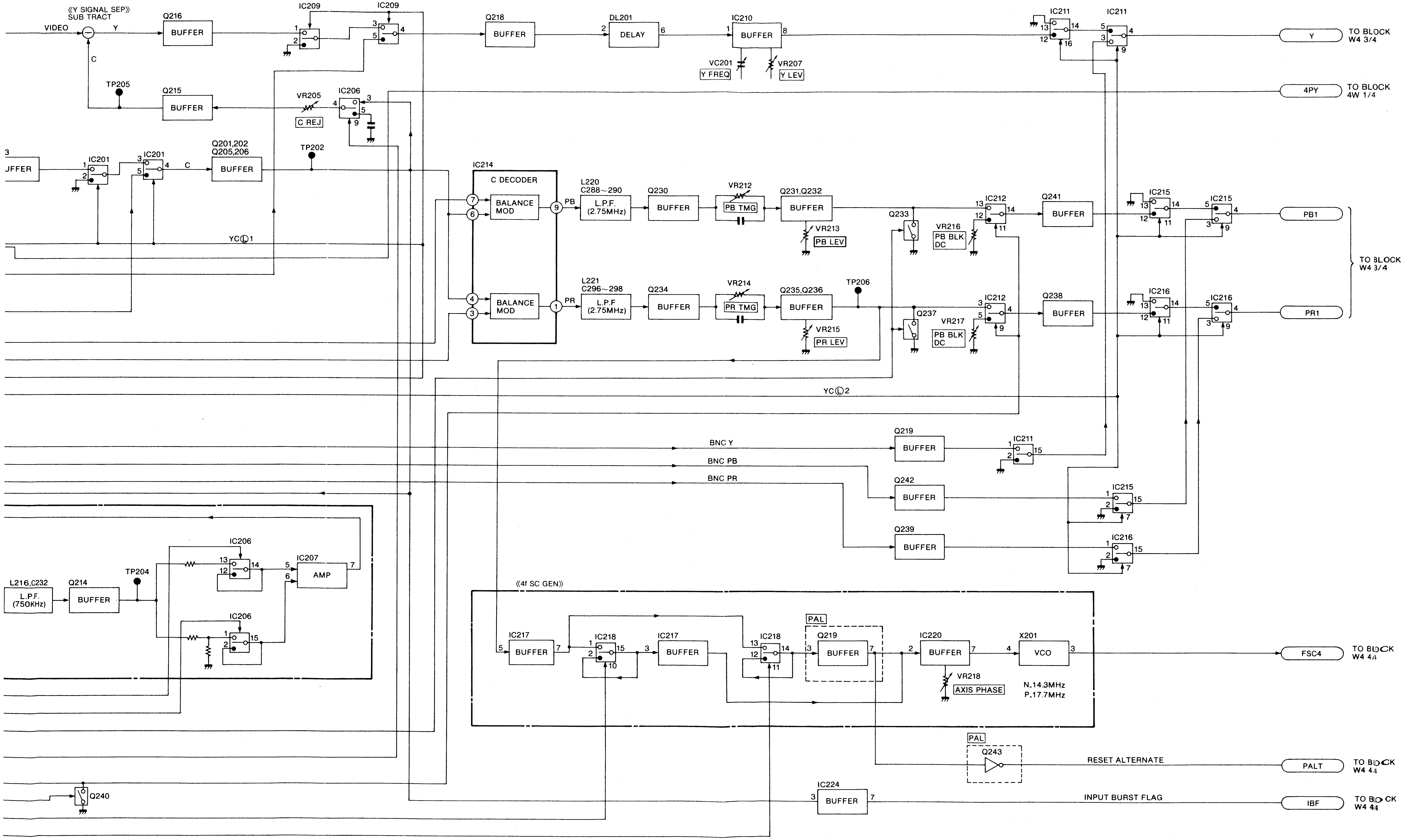

《Y SIGNAL SEP》
SUB TRACT
VIDEO
Y
C
Q216
BUFFER
IC209
IC209
Q218
BUFFER
DL201
DELAY
IC210
BUFFER
VC201
Y FREQ
VR207
Y LEV
IC211
IC211
Y
TO BLOCK W4 3/4
TP205
Q215
BUFFER
VR205
C REJ
IC206
4PY
TO BLOCK 4W 1/4
3
UFFER
IC201
IC201
C
Q201,202 Q205,206
BUFFER
TP202
IC214
C DECODER
BALANCE MOD
BALANCE MOD
PB
PR
L220 C288~290
L.P.F. (2.75MHz)
Q230
BUFFER
VR212
PB TMG
Q231,Q232
BUFFER
VR213
PB LEV
Q233
VR216
PB BLK DC
IC212
Q241
BUFFER
IC215
IC215
PB1
TO BLOCK W4 3/4
YCⓁ1
L221 C296~298
L.P.F (2.75MHz)
Q234
BUFFER
VR214
PR TMG
Q235,Q236
BUFFER
VR215
PR LEV
TP206
Q237
VR217
PB BLK DC
IC212
Q238
BUFFER
IC216
IC216
PR1
YCⓁ2
BNC Y
BNC PB
BNC PR
Q219
BUFFER
IC211
Q242
BUFFER
IC215
Q239
BUFFER
IC216
IC206
IC207
AMP
TP204
L216,C232
L.P.F. (750KHz)
Q214
BUFFER
IC206
《4f SC GEN》
IC217
BUFFER
IC218
IC217
BUFFER
IC218
PAL
Q219
BUFFER
IC220
BUFFER
X201
VCO
VR218
AXIS PHASE
N.14.3MHz
P.17.7MHz
FSC4
TO BLOCK W4 4/4
PAL
Q243
RESET ALTERNATE
PALT
TO BLOCK W4 4/4
Q240
IC224
BUFFER
INPUT BURST FLAG
IBF
TO BLOCK W4 4/4

CM) BLOCK DIAGRAM 3/4 (CTCM SECTION)[FOR AU-65, AU-665 (NTSC)]

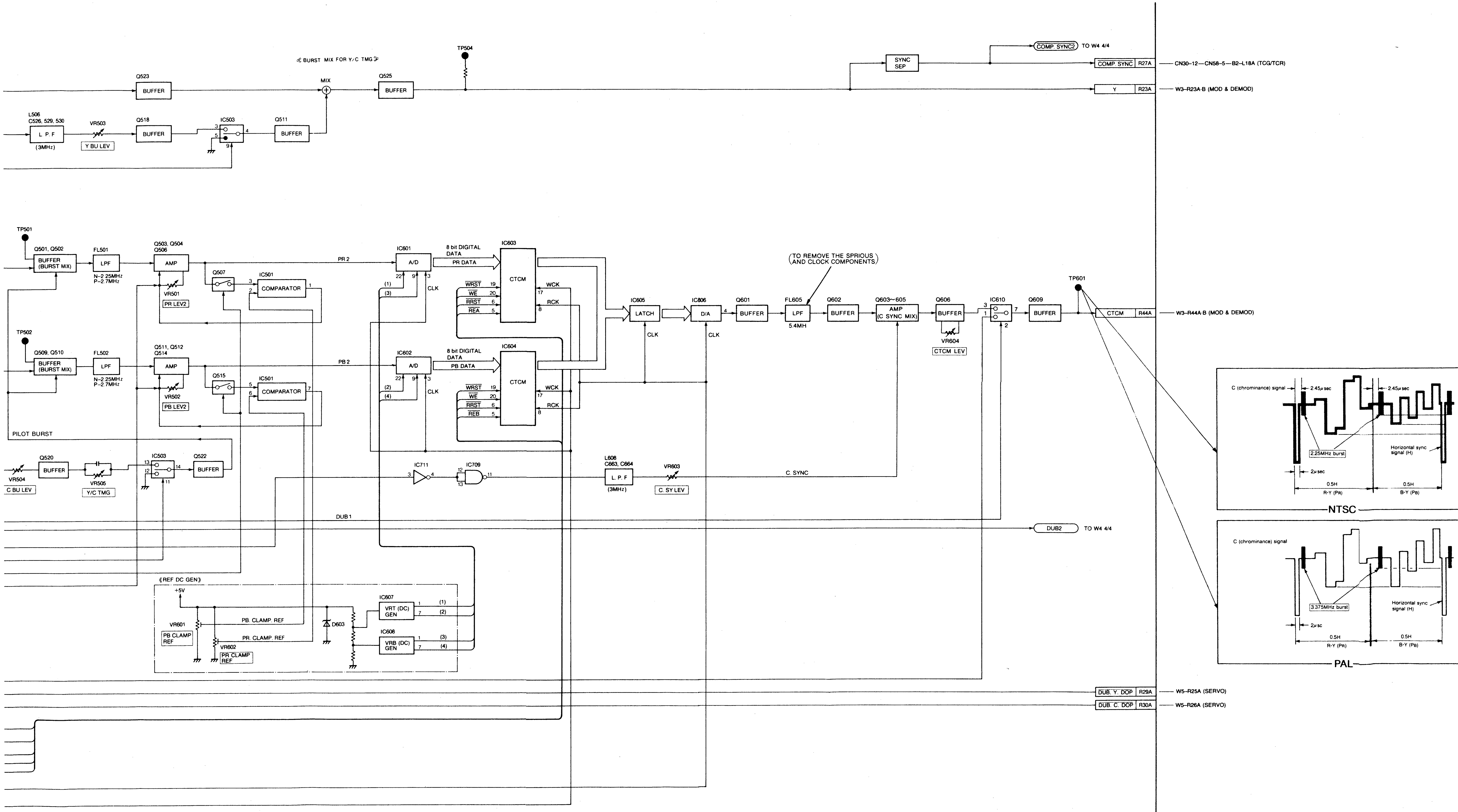
《BURST MIX FOR Y/C TMG》
TP504
Q523
BUFFER
MIX
Q525
BUFFER
SYNC SEP
COMP. SYNC2
TO W4 4/4
COMP. SYNC
R27A
CN30-12—CN58-5—B2-L18A (TCG/TCR)
Y
R23A
W3-R23A·B (MOD & DEMOD)
L506
C526, 529, 530
L. P. F
(3MHz)
VR503
Y BU LEV
Q518
BUFFER
IC503
Q511
BUFFER
TP501
Q501, Q502
BUFFER (BURST MIX)
FL501
LPF
N-2.25MHz
P-2.7MHz
Q503, Q504
Q506
AMP
VR501
PR LEV2
Q507
IC501
COMPARATOR
PR 2
IC601
A/D
8 bit DIGITAL DATA
PR DATA
IC603
CTCM
WRST
WE
RRST
REA
WCK
RCK
CLK
(TO REMOVE THE SPRIOUS AND CLOCK COMPONENTS)
IC605
LATCH
IC806
D/A
Q601
BUFFER
FL605
LPF
5.4MH
Q602
BUFFER
Q603~605
AMP (C SYNC MIX)
Q606
BUFFER
VR604
CTCM LEV
IC610
Q609
BUFFER
TP601
CTCM
R44A
W3-R44A·B (MOD & DEMOD)
TP502
Q509, Q510
BUFFER (BURST MIX)
FL502
LPF
N-2.25MHz
P-2.7MHz
Q511, Q512
Q514
AMP
VR502
PB LEV2
Q515
IC501
COMPARATOR
PB 2
IC602
A/D
8 bit DIGITAL DATA
PB DATA
IC604
CTCM
WRST
WE
RRST
REB
WCK
RCK
PILOT BURST
Q520
BUFFER
VR504
C BU LEV
VR505
Y/C TMG
IC503
Q522
BUFFER
IC711
IC709
L608
C663, C664
L. P. F
(3MHz)
VR603
C. SY LEV
C. SYNC
DUB 1
DUB2
TO W4 4/4
《REF DC GEN》
+5V
VR601
PB CLAMP REF
PB. CLAMP. REF
PR. CLAMP. REF
VR602
PR CLAMP REF
D603
IC607
VRT (DC) GEN
IC608
VRB (DC) GEN
DUB. Y. DOP
R29A
W5-R25A (SERVO)
DUB. C. DOP
R30A
W5-R26A (SERVO)
C (chrominance) signal
2.45μ sec
2.25MHz burst
Horizontal sync signal (H)
2μ sec
0.5H
R-Y (PR)
B-Y (PB)
NTSC
C (chrominance) signal
3.375MHz burst
Horizontal sync signal (H)
2μ sc
0.5H
R-Y (PR)
B-Y (PB)
PAL

W4 (DEC & CTCM) BLOCK DIAGRAM 3/4 (CTCM SECTION) [FOR AU-65, AU-665 (NTSC)]

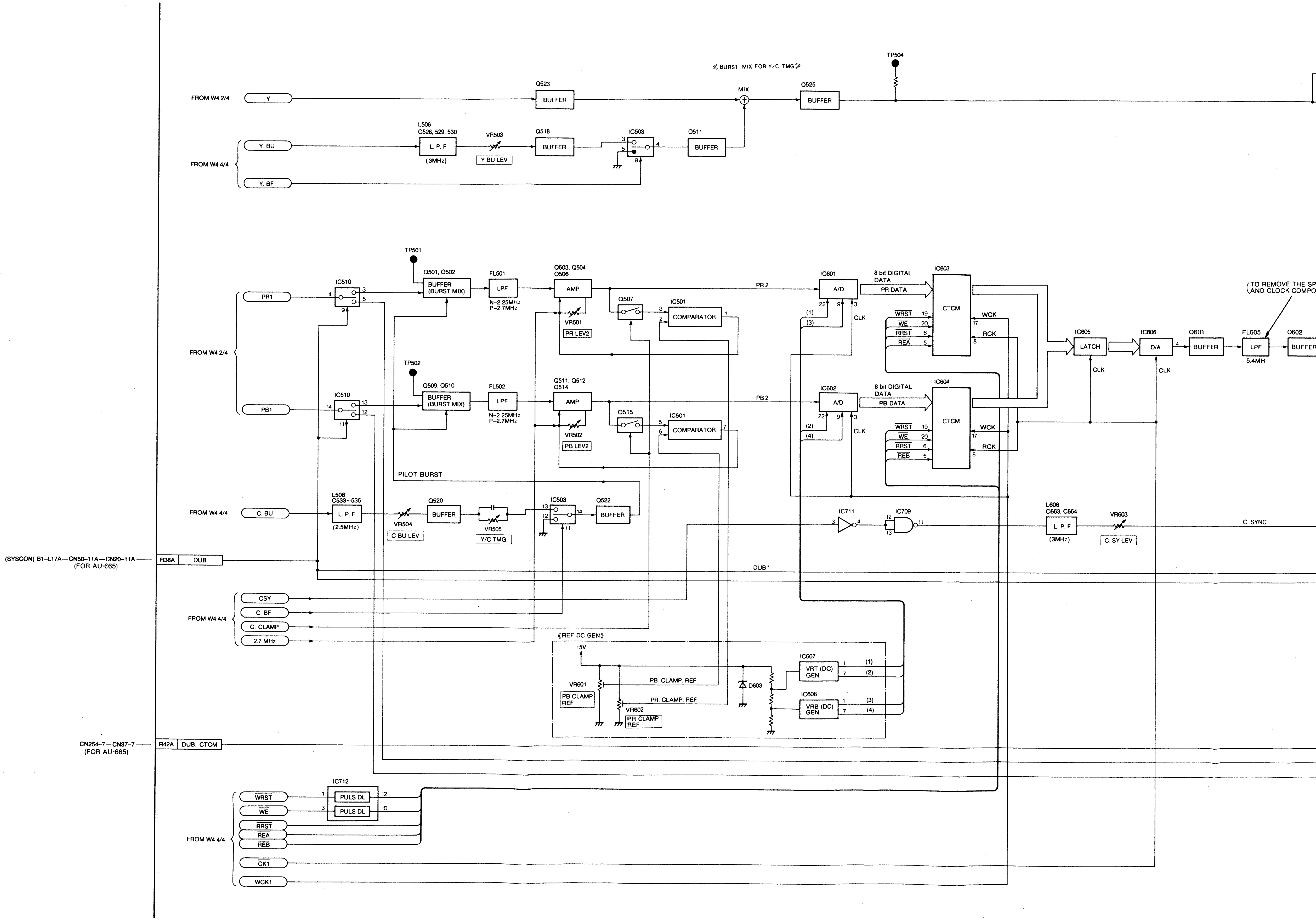
FROM W4 2/4
Y
Q523
BUFFER
≪BURST MIX FOR Y/C TMG≫
MIX
Q525
BUFFER
TP504
FROM W4 4/4
Y. BU
Y. BF
L506
C526, 529, 530
L. P. F
(3MHz)
VR503
Y BU LEV
Q518
BUFFER
IC503
Q511
BUFFER
TP501
Q501, Q502
BUFFER (BURST MIX)
FL501
LPF
N-2.25MHz
P-2.7MHz
Q503, Q504
Q506
AMP
VR501
PR LEV2
Q507
IC501
COMPARATOR
PR 2
IC601
A/D
8 bit DIGITAL DATA
PR DATA
IC603
CTCM
WRST
WE
RRST
REA
WCK
RCK
CLK
IC510
PR1
PB1
FROM W4 2/4
TP502
Q509, Q510
BUFFER (BURST MIX)
FL502
LPF
N-2.25MHz
P-2.7MHz
Q511, Q512
Q514
AMP
VR502
PB LEV2
Q515
IC501
COMPARATOR
PB 2
IC602
A/D
8 bit DIGITAL DATA
PB DATA
IC604
CTCM
WRST
WE
RRST
REB
WCK
RCK
CLK
(TO REMOVE THE SP
AND CLOCK COMPO
IC605
LATCH
IC606
D/A
Q601
BUFFER
FL605
LPF
5.4MH
Q602
BUFFER
PILOT BURST
FROM W4 4/4
C. BU
L508
C533~535
L. P. F
(2.5MHz)
VR504
C BU LEV
Q520
BUFFER
VR505
Y/C TMG
IC503
Q522
BUFFER
IC711
IC709
L608
C663, C664
L. P. F
(3MHz)
VR603
C. SY LEV
C. SYNC
(SYSCON) B1-L17A—CN50-11A—CN20-11A
(FOR AU-665)
R38A
DUB
DUB 1
FROM W4 4/4
CSY
C. BF
C. CLAMP
2.7 MHz
≪REF DC GEN≫
+5V
VR601
PB CLAMP REF
PB. CLAMP. REF
PR. CLAMP. REF
VR602
PR CLAMP REF
D603
IC607
VRT (DC) GEN
IC608
VRB (DC) GEN
CN254-7—CN37-7
(FOR AU-665)
R42A
DUB. CTCM
IC712
PULS DL
PULS DL
FROM W4 4/4
WRST
WE
RRST
REA
REB
CK1
WCK1

W4 (DEC & CTCM) BLOCK DIAGRAM 4/4 (CONTROL PULSE GENERATION SECTION) [FOR AU-65, AU-665

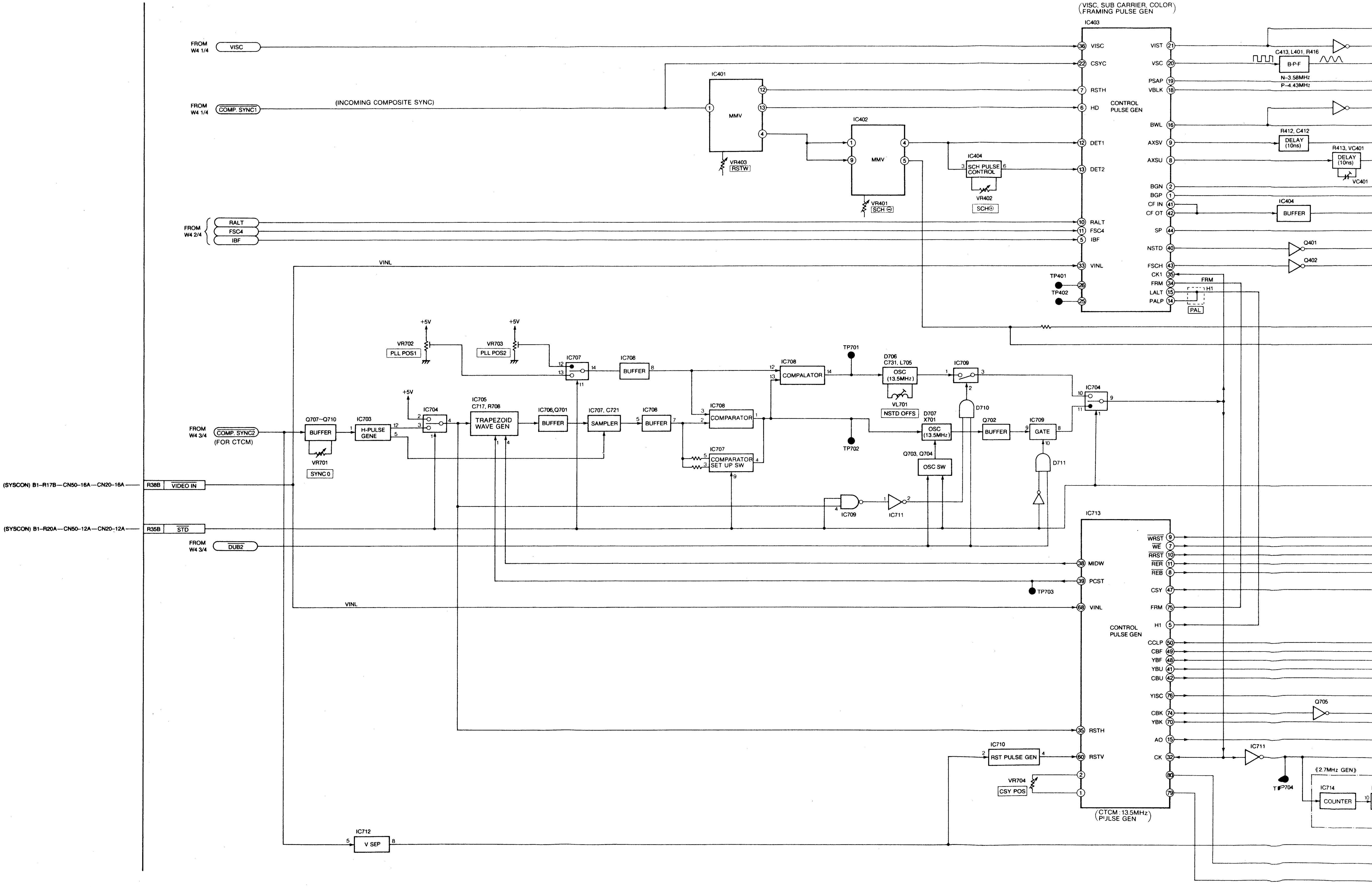
FROM W4 1/4
VISC
FROM W4 1/4
COMP. SYNC1
(INCOMING COMPOSITE SYNC)
FROM W4 2/4
RALT
FSC4
IBF
VINL
FROM W4 3/4
COMP. SYNC2
(FOR CTCM)
(SYSCON) B1-R17B—CN50-16A—CN20-16A
R38B
VIDEO IN
(SYSCON) B1-R20A—CN50-12A—CN20-12A
R35B
STD
FROM W4 3/4
DUB2
IC401
MMV
VR403
RSTW
IC402
MMV
VR401
SCH ⊖
IC404
SCH PULSE CONTROL
VR402
SCH⊕
(VISC, SUB CARRIER, COLOR FRAMING PULSE GEN)
IC403
VISC
CSYC
RSTH
HD
DET1
DET2
RALT
FSC4
IBF
VINL
TP401
TP402
CONTROL PULSE GEN
VIST
VSC
PSAP
VBLK
BWL
AXSV
AXSU
BGN
BGP
CF IN
CF OT
SP
NSTD
FSCH
CK1
FRM
LALT
PALP
FRM
H1
PAL
C413, L401, R416
B-P-F
N-3.58MHz
P-4.43MHz
R412, C412
DELAY (10ns)
R413, VC401
DELAY (10ns)
VC401
IC404
BUFFER
Q401
Q402
+5V
VR702
PLL POS1
+5V
VR703
PLL POS2
IC707
IC708
BUFFER
IC708
COMPALATOR
TP701
D706
C731, L705
OSC (13.5MHz)
VL701
NSTD OFFS
IC709
D710
IC704
+5V
IC704
Q707~Q710
BUFFER
VR701
SYNC 0
IC703
H-PULSE GENE
IC705
C717, R708
TRAPEZOID WAVE GEN
IC706,Q701
BUFFER
IC707, C721
SAMPLER
IC708
BUFFER
IC708
COMPARATOR
IC707
COMPARATOR SET UP SW
TP702
D707
X701
OSC (13.5MHz)
Q703, Q704
OSC SW
Q702
BUFFER
IC709
GATE
D711
IC709
IC711
IC713
MIDW
PCST
TP703
VINL
CONTROL PULSE GEN
RSTH
RSTV
WRST
WE
RRST
RER
REB
CSY
FRM
H1
CCLP
CBF
YBF
YBU
CBU
YISC
CBK
YBK
AO
CK
(CTCM: 13.5MHz PULSE GEN)
IC710
RST PULSE GEN
VR704
CSY POS
Q705
IC711
TP704
(2.7MHz GEN)
IC714
COUNTER
IC712
V SEP

IAGRAM 4/4 (CONTROL PULSE GENERATION SECTION) [FOR AU-65, AU-665 (NTSC)]

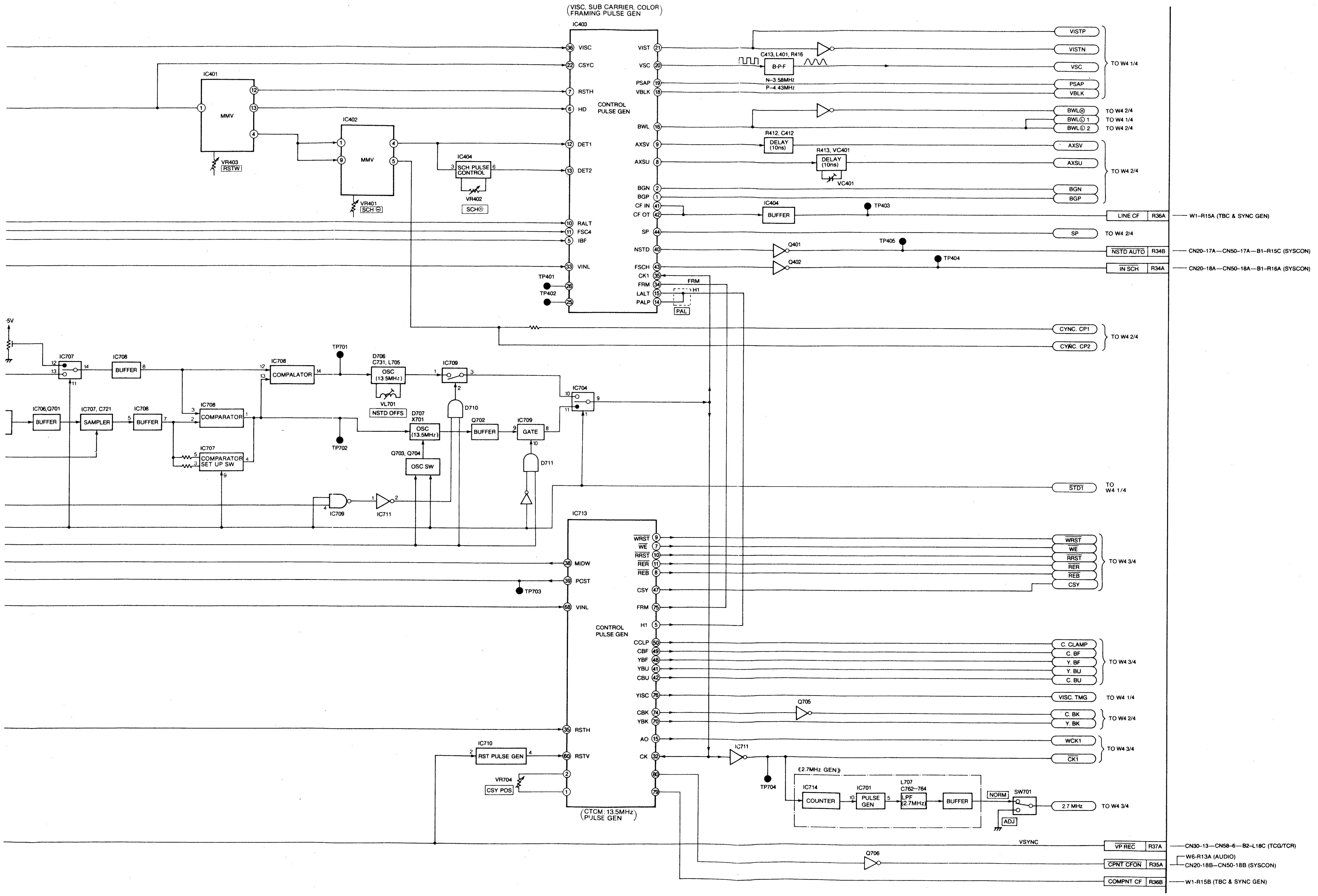

(VISC, SUB CARRIER, COLOR FRAMING PULSE GEN)
IC403
VISC
CSYC
RSTH
HD
DET1
DET2
RALT
FSC4
IBF
VINL
CONTROL PULSE GEN
VIST
VSC
PSAP
VBLK
BWL
AXSV
AXSU
BGN
BGP
CF IN
CF OT
SP
NSTD
FSCH
CK1
FRM
LALT
PALP
TP401
TP402
H1
PAL
IC401
MMV
VR403
RSTW
IC402
MMV
VR401
SCH ⊖
IC404
SCH PULSE CONTROL
VR402
SCH⊕
C413, L401, R416
B-P-F
N-3 58MHz
P-4 43MHz
R412, C412
DELAY (10ns)
R413, VC401
DELAY (10ns)
VC401
IC404
BUFFER
TP403
TP405
TP404
Q401
Q402
VISTP
VISTN
VSC
PSAP
VBLK
TO W4 1/4
BWL⊛
BWLⓁ 1
BWLⓁ 2
TO W4 2/4
TO W4 1/4
TO W4 2/4
AXSV
AXSU
BGN
BGP
TO W4 2/4
LINE CF
R36A
W1-R15A (TBC & SYNC GEN)
SP
TO W4 2/4
NSTD AUTO
R34B
CN20-17A—CN50-17A—B1-R15C (SYSCON)
IN SCH
R34A
CN20-18A—CN50-18A—B1-R16A (SYSCON)
CYNC. CP1
CYNC. CP2
TO W4 2/4
5V
IC707
IC708
BUFFER
IC708
COMPALATOR
TP701
D706
C731, L705
OSC (13.5MHz)
VL701
NSTD OFFS
IC709
D710
IC704
IC706,Q701
BUFFER
IC707, C721
SAMPLER
IC708
BUFFER
IC708
COMPARATOR
D707
X701
OSC (13.5MHz)
Q702
BUFFER
IC709
GATE
D711
TP702
IC707
COMPARATOR SET UP SW
Q703, Q704
OSC SW
IC709
IC711
STD1
TO W4 1/4
IC713
WRST
WE
RRST
RER
REB
CSY
MIDW
PCST
TP703
VINL
FRM
H1
CONTROL PULSE GEN
CCLP
CBF
YBF
YBU
CBU
YISC
CBK
YBK
RSTH
AO
RSTV
CK
WRST
WE
RRST
RER
REB
CSY
TO W4 3/4
C. CLAMP
C. BF
Y. BF
Y. BU
C. BU
TO W4 3/4
VISC. TMG
TO W4 1/4
Q705
C. BK
Y. BK
TO W4 2/4
WCK1
CK1
TO W4 3/4
IC710
RST PULSE GEN
VR704
CSY POS
(CTCM: 13.5MHz PULSE GEN)
IC711
TP704
(2.7MHz GEN)
IC714
COUNTER
IC701
PULSE GEN
L707
C762~764
LPF (2.7MHz)
BUFFER
NORM
SW701
ADJ
2.7 MHz
TO W4 3/4
VSYNC
VP REC
R37A
CN30-13—CN58-6—B2-L18C (TCG/TCR)
Q706
CPNT CFON
R35A
W6-R13A (AUDIO)
CN20-18B—CN50-18B (SYSCON)
COMPNT CF
R36B
W1-R15B (TBC & SYNC GEN)

W5 (SERVO) BLOCK DIAGRAM 1/6 (CAPSTAN SERVO SECTION)

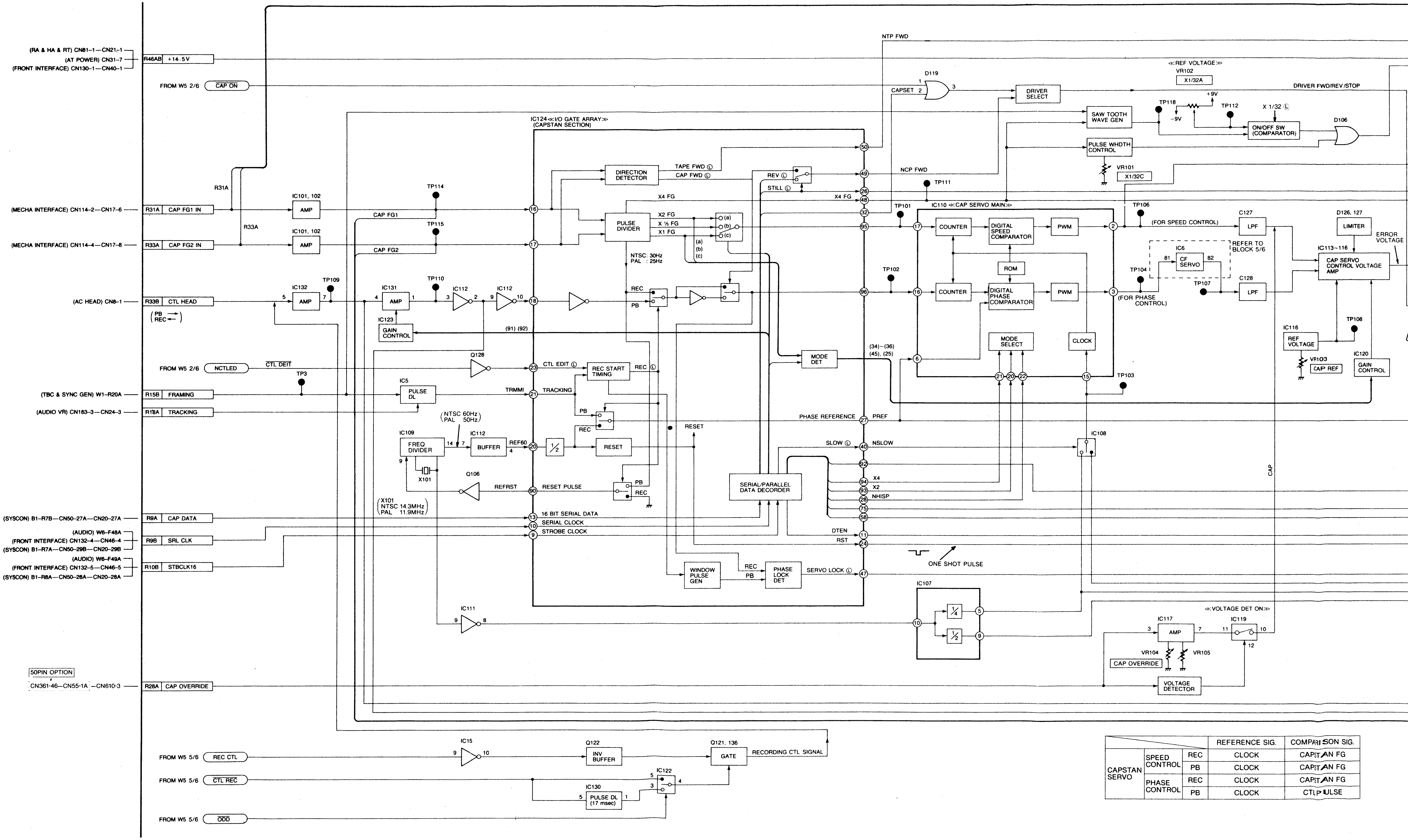
(RA & HA & RT) CN81-1—CN21-1
(AT POWER) CN31-7
(FRONT INTERFACE) CN130-1—CN40-1
R46AB +14.5V
FROM W5 2/6 CAP ON
(MECHA INTERFACE) CN114-2—CN17-6
R31A CAP FG1 IN
(MECHA INTERFACE) CN114-4—CN17-8
R33A CAP FG2 IN
R31A
R33A
IC101, 102
AMP
(AC HEAD) CN8-1
R33B CTL HEAD
PB →
REC ←
IC132
AMP
TP109
FROM W5 2/6 NCTLED
CTL DEIT
TP3
(TBC & SYNC GEN) W1-R20A
R15B FRAMING
(AUDIO VR) CN163-3—CN24-3
R18A TRACKING
(SYSCON) B1-R7B—CN50-27A—CN20-27A
R9A CAP DATA
(AUDIO) W6-F48A
(FRONT INTERFACE) CN132-4—CN46-4
(SYSCON) B1-R7A—CN50-29B—CN20-29B
R9B SRL CLK
(AUDIO) W6-F49A
(FRONT INTERFACE) CN132-5—CN46-5
(SYSCON) B1-R8A—CN50-28A—CN20-28A
R10B STBCLK16
50PIN OPTION
CN361-46—CN55-1A—CN610-3
R28A CAP OVERRIDE
FROM W5 5/6 REC CTL
FROM W5 5/6 CTL REC
FROM W5 5/6 ODD
TP114
TP115
CAP FG1
CAP FG2
TP110
IC131
AMP
IC112
IC123
GAIN CONTROL
(91) (92)
Q128
IC5
PULSE DL
TRMMI
(NTSC 60Hz)
(PAL 50Hz)
IC109
FREQ DIVIDER
X101
IC112
BUFFER
REF60
Q106
REFRST
RESET PULSE
(X101
NTSC 14.3MHz
PAL 11.9MHz)
IC111
IC15
Q122
INV BUFFER
Q121, 136
GATE
RECORDING CTL SIGNAL
IC122
IC130
PULSE DL
(17 msec)
IC124 ≪I/O GATE ARRAY≫
(CAPSTAN SECTION)
DIRECTION DETECTOR
TAPE FWD Ⓛ
CAP FWD Ⓛ
X4 FG
PULSE DIVIDER
X2 FG
X ½ FG
X1 FG
(a)
(b)
(c)
NTSC: 30Hz
PAL : 25Hz
REC
PB
CTL EDIT Ⓛ
REC START TIMING
REC Ⓛ
TRACKING
RESET
½
16 BIT SERIAL DATA
SERIAL CLOCK
STROBE CLOCK
SERIAL/PARALLEL DATA DECORDER
WINDOW PULSE GEN
PHASE LOCK DET
SERVO LOCK Ⓛ
REV Ⓛ
STILL Ⓛ
MODE DET
(34)~(36)
(45), (25)
PHASE REFERENCE
PREF
SLOW Ⓛ
NSLOW
X4
X2
NHISP
DTEN
RST
ONE SHOT PULSE
NTP FWD
D119
CAPSET
NCP FWD
TP111
TP101
TP102
IC110 ≪CAP SERVO MAIN≫
COUNTER
DIGITAL SPEED COMPARATOR
DIGITAL PHASE COMPARATOR
ROM
PWM
MODE SELECT
CLOCK
TP103
IC108
IC107
¼
½
DRIVER SELECT
SAW TOOTH WAVE GEN
PULSE WHDTH CONTROL
VR101
X1/32C
≪REF VOLTAGE≫
VR102
X1/32A
+9V
-9V
TP118
TP112
X 1/32 Ⓛ
ON/OFF SW (COMPARATOR)
D106
DRIVER FWD/REV/STOP
TP106
(FOR SPEED CONTROL)
C127
LPF
TP104
(FOR PHASE CONTROL)
IC6
CF SERVO
REFER TO BLOCK 5/6
TP107
C128
LPF
D126, 127
LIMITER
ERROR VOLTAGE
IC113~116
CAP SERVO CONTROL VOLTAGE AMP
IC116
REF VOLTAGE
VR103
CAP REF
TP108
IC120
GAIN CONTROL
CAP
≪VOLTAGE DET ON≫
IC117
AMP
IC119
VR104
VR105
CAP OVERRIDE
VOLTAGE DETECTOR

			REFERENCE SIG.	COMPARISON SIG.
CAPSTAN SERVO	SPEED CONTROL	REC	CLOCK	CAPSTAN FG
		PB	CLOCK	CAPSTAN FG
	PHASE CONTROL	REC	CLOCK	CAPSTAN FG
		PB	CLOCK	CTL PULSE

1/6 (CAPSTAN SERVO SECTION)

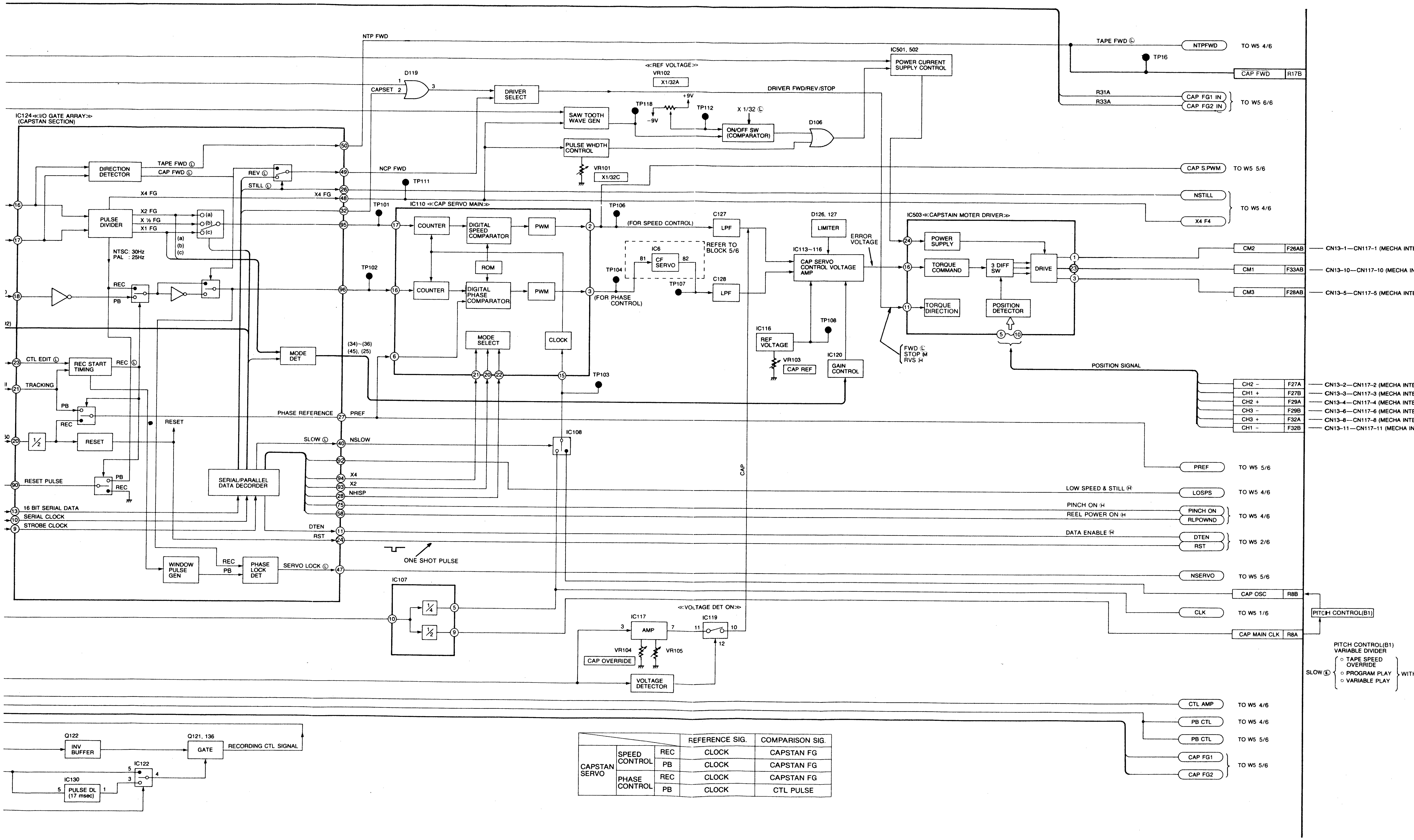
IC124 ≪I/O GATE ARRAY≫
(CAPSTAN SECTION)
DIRECTION DETECTOR
TAPE FWD Ⓛ
CAP FWD Ⓛ
X4 FG
PULSE DIVIDER
X2 FG
X ½ FG
X1 FG
NTSC: 30Hz
PAL : 25Hz
REC
PB
CTL EDIT Ⓛ
REC START TIMING
TRACKING
RESET
RESET PULSE
16 BIT SERIAL DATA
SERIAL CLOCK
STROBE CLOCK
SERIAL/PARALLEL DATA DECORDER
WINDOW PULSE GEN
PHASE LOCK DET
SERVO LOCK Ⓛ
MODE DET
REV Ⓛ
STILL Ⓛ
NTP FWD
NCP FWD
CAPSET
D119
DRIVER SELECT
TP111
TP101
TP102
IC110 ≪CAP SERVO MAIN≫
COUNTER
DIGITAL SPEED COMPARATOR
DIGITAL PHASE COMPARATOR
ROM
PWM
MODE SELECT
CLOCK
TP103
PHASE REFERENCE
PREF
SLOW Ⓛ
NSLOW
X4
X2
NHISP
DTEN
RST
ONE SHOT PULSE
IC107
¼
½
IC108
≪REF VOLTAGE≫
VR102
X1/32A
TP118
+9V
-9V
TP112
X 1/32 Ⓛ
SAW TOOTH WAVE GEN
PULSE WHDTH CONTROL
VR101
X1/32C
ON/OFF SW (COMPARATOR)
D106
DRIVER FWD/REV/STOP
TP106
(FOR SPEED CONTROL)
C127
LPF
IC6
CF SERVO
REFER TO BLOCK 5/6
TP104
TP107
C128
(FOR PHASE CONTROL)
D126, 127
LIMITER
ERROR VOLTAGE
IC113~116
CAP SERVO CONTROL VOLTAGE AMP
IC116
REF VOLTAGE
VR103
CAP REF
TP108
IC120
GAIN CONTROL
CAP
IC501, 502
POWER CURRENT SUPPLY CONTROL
IC503 ≪CAPSTAIN MOTER DRIVER≫
POWER SUPPLY
TORQUE COMMAND
TORQUE DIRECTION
3 DIFF SW
DRIVE
POSITION DETECTOR
FWD Ⓛ
STOP Ⓜ
RVS Ⓗ
POSITION SIGNAL
≪VOLTAGE DET ON≫
IC117
AMP
IC119
VR104
VR105
CAP OVERRIDE
VOLTAGE DETECTOR
TAPE FWD Ⓛ
TP16
NTPFWD
TO W5 4/6
CAP FWD
R17B
R31A
R33A
CAP FG1 IN
CAP FG2 IN
TO W5 6/6
CAP S.PWM
TO W5 5/6
NSTILL
X4 F4
TO W5 4/6
CM2
F26AB
CN13-1—CN117-1 (MECHA INT
CM1
F33AB
CN13-10—CN117-10 (MECHA IN
CM3
F28AB
CN13-5—CN117-5 (MECHA INT
CH2 -
F27A
CN13-2—CN117-2 (MECHA INT
CH1 +
F27B
CN13-3—CN117-3 (MECHA INT
CH2 +
F29A
CN13-4—CN117-4 (MECHA INT
CH3 -
F29B
CN13-6—CN117-6 (MECHA INT
CH3 +
F32A
CN13-8—CN117-8 (MECHA INT
CH1 -
F32B
CN13-11—CN117-11 (MECHA IN
PREF
TO W5 5/6
LOW SPEED & STILL Ⓗ
LOSPS
TO W5 4/6
PINCH ON Ⓗ
REEL POWER ON Ⓗ
PINCH ON
RLPOWND
TO W5 4/6
DATA ENABLE Ⓗ
DTEN
RST
TO W5 2/6
NSERVO
TO W5 5/6
CAP OSC
R8B
CLK
TO W5 1/6
PITCH CONTROL(B1)
CAP MAIN CLK
R8A
PITCH CONTROL(B1)
VARIABLE DIVIDER
SLOW Ⓛ
○ TAPE SPEED OVERRIDE
○ PROGRAM PLAY
○ VARIABLE PLAY
WIT
CTL AMP
TO W5 4/6
PB CTL
TO W5 4/6
PB CTL
TO W5 5/6
CAP FG1
CAP FG2
TO W5 5/6
Q122
INV BUFFER
Q121, 136
GATE
RECORDING CTL SIGNAL
IC122
IC130
PULSE DL (17 msec)

			REFERENCE SIG.	COMPARISON SIG.
CAPSTAN SERVO	SPEED CONTROL	REC	CLOCK	CAPSTAN FG
		PB	CLOCK	CAPSTAN FG
	PHASE CONTROL	REC	CLOCK	CAPSTAN FG
		PB	CLOCK	CTL PULSE

W5 (SERVO) BLOCK DIAGRAM 2/6 (DRUM SERVO SECTION)

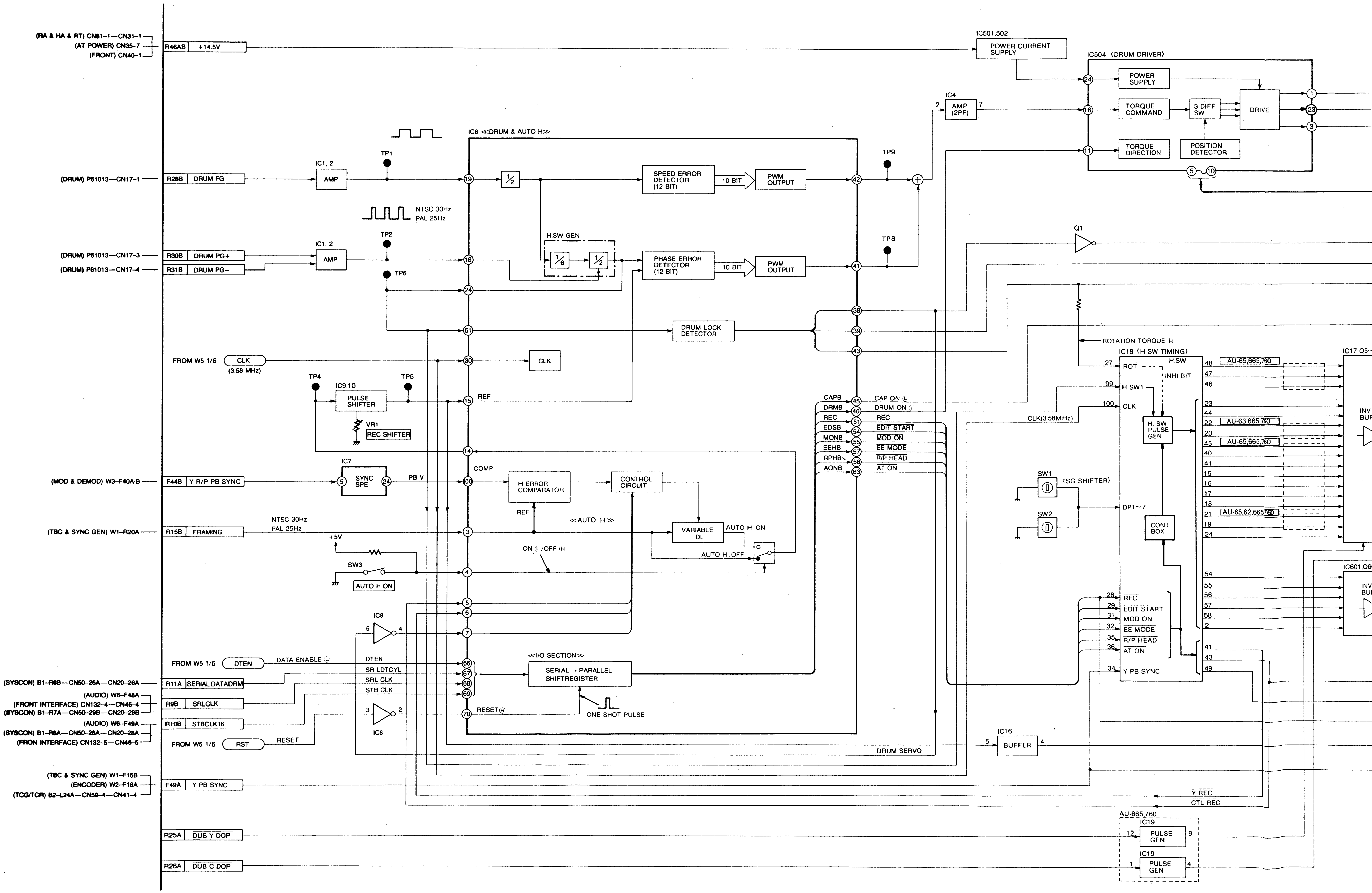
(RA & HA & RT) CN81-1—CN31-1
(AT POWER) CN35-7
(FRONT) CN40-1
R46AB +14.5V
IC501,502
POWER CURRENT SUPPLY
IC504 (DRUM DRIVER)
POWER SUPPLY
TORQUE COMMAND
3 DIFF SW
DRIVE
TORQUE DIRECTION
POSITION DETECTOR
IC4
AMP (2PF)
IC6 ≪DRUM & AUTO H≫
(DRUM) P61013—CN17-1
R28B DRUM FG
IC1, 2
AMP
TP1
1/2
SPEED ERROR DETECTOR (12 BIT)
10 BIT
PWM OUTPUT
TP9
NTSC 30Hz
PAL 25Hz
H.SW GEN
1/6
1/2
(DRUM) P61013—CN17-3
(DRUM) P61013—CN17-4
R30B DRUM PG+
R31B DRUM PG−
TP2
TP6
PHASE ERROR DETECTOR (12 BIT)
TP8
Q1
DRUM LOCK DETECTOR
ROTATION TORQUE H
IC18 (H SW TIMING)
ROT
INHI-BIT
H SW1
CLK
H.SW
H SW PULSE GEN
CONT BOX
DP1~7
Y PB SYNC
FROM W5 1/6
CLK
(3.58 MHz)
CLK(3.58MHz)
TP4
IC9,10
PULSE SHIFTER
TP5
REF
VR1
REC SHIFTER
CAPB
DRMB
REC
EDSB
MONB
EEHB
RPHB
AONB
CAP ON L
DRUM ON L
REC
EDIT START
MOD ON
EE MODE
R/P HEAD
AT ON
SW1
(SG SHIFTER)
SW2
IC7
(MOD & DEMOD) W3-F40A·B
F44B Y R/P PB SYNC
SYNC SPE
PB V
COMP
H ERROR COMPARATOR
CONTROL CIRCUIT
REF
≪AUTO H≫
VARIABLE DL
AUTO H ON
AUTO H OFF
(TBC & SYNC GEN) W1-R20A
R15B FRAMING
+5V
ON (L)/OFF (H)
SW3
AUTO H ON
IC8
FROM W5 1/6
DTEN
DATA ENABLE L
DTEN
SR LDTCYL
SRL CLK
STB CLK
≪I/O SECTION≫
SERIAL → PARALLEL SHIFTREGISTER
ONE SHOT PULSE
RESET H
(SYSCON) B1-R8B—CN50-26A—CN20-26A
R11A SERIAL DATADRM
(AUDIO) W6-F48A
(FRONT INTERFACE) CN132-4—CN46-4
(SYSCON) B1-R7A—CN50-29B—CN20-29B
R9B SRLCLK
(AUDIO) W6-F49A
(SYSCON) B1-R8A—CN50-28A—CN20-28A
(FRON INTERFACE) CN132-5—CN46-5
R10B STBCLK16
FROM W5 1/6
RST
RESET
IC16
BUFFER
DRUM SERVO
(TBC & SYNC GEN) W1-F15B
(ENCODER) W2-F18A
(TCG/TCR) B2-L24A—CN59-4—CN41-4
F49A Y PB SYNC
Y REC
CTL REC
R25A DUB Y DOP
R26A DUB C DOP
AU-665,760
IC19
PULSE GEN
IC19
PULSE GEN
REC
EDIT START
MOD ON
EE MODE
R/P HEAD
AT ON
AU-65,665,760
AU-63,665,760
AU-65,665,760
AU-65,62,665,760
IC17 Q5~
INV BUF
IC601,Q6
INV BU

GRAM 2/6 (DRUM SERVO SECTION)

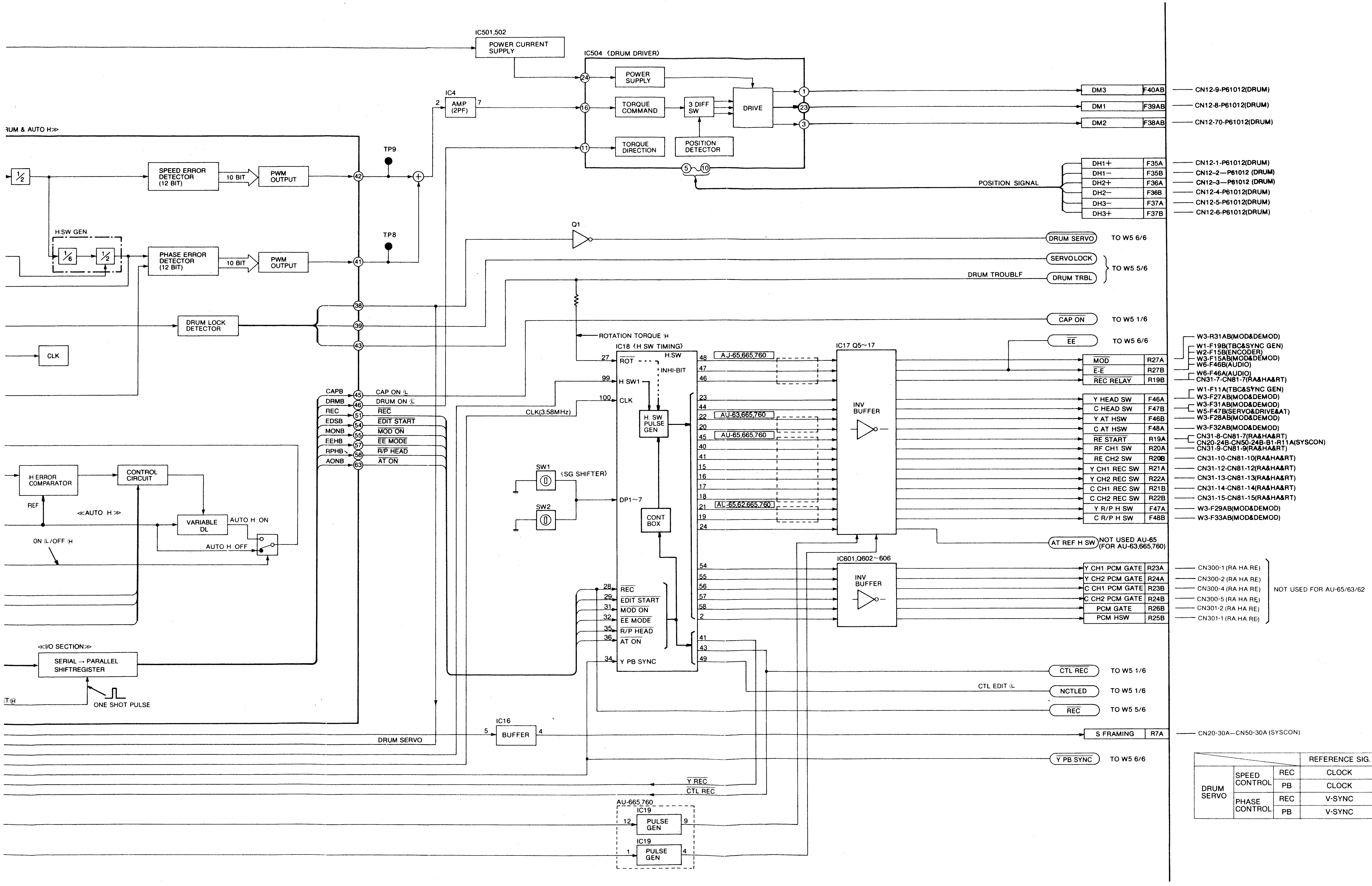

IC501,502
POWER CURRENT SUPPLY
IC504 (DRUM DRIVER)
POWER SUPPLY
TORQUE COMMAND
3 DIFF SW
DRIVE
TORQUE DIRECTION
POSITION DETECTOR
IC4
AMP (2PF)
UM & AUTO H≫
TP9
TP8
SPEED ERROR DETECTOR (12 BIT)
10 BIT
PWM OUTPUT
H.SW GEN
PHASE ERROR DETECTOR (12 BIT)
DRUM LOCK DETECTOR
CLK
Q1
DM3 F40AB — CN12-9-P61012(DRUM)
DM1 F39AB — CN12-8-P61012(DRUM)
DM2 F38AB — CN12-70-P61012(DRUM)
POSITION SIGNAL
DH1+ F35A — CN12-1-P61012(DRUM)
DH1− F35B — CN12-2—P61012 (DRUM)
DH2+ F36A — CN12-3—P61012 (DRUM)
DH2− F36B — CN12-4-P61012(DRUM)
DH3− F37A — CN12-5-P61012(DRUM)
DH3+ F37B — CN12-6-P61012(DRUM)
DRUM SERVO — TO W5 6/6
SERVO LOCK
DRUM TROUBLF
DRUM TRBL — TO W5 5/6
CAP ON — TO W5 1/6
EE — TO W5 6/6
ROTATION TORQUE H
IC18 (H SW TIMING)
ROT
H.SW
INHI-BIT
H SW1
CLK
CLK(3.58MHz)
H. SW PULSE GEN
DP1~7
CONT BOX
SW1 (SG SHIFTER)
SW2
REC
EDIT START
MOD ON
EE MODE
R/P HEAD
AT ON
Y PB SYNC
AJ-65,665,760
AU-63,665,760
AU-65,665,760
AU-65,62,665,760
IC17 Q5~17
INV BUFFER
MOD R27A
E-E R27B
REC RELAY R19B
Y HEAD SW F46A
C HEAD SW F47B
Y AT HSW F46B
C AT HSW F48A
RE START R19A
RF CH1 SW R20A
RE CH2 SW R20B
Y CH1 REC SW R21A
Y CH2 REC SW R22A
C CH1 REC SW R21B
C CH2 REC SW R22B
Y R/P H SW F47A
C R/P H SW F48B
W3-R31AB(MOD&DEMOD)
W1-F19B(TBC&SYNC GEN)
W2-F15B(ENCODER)
W3-F15AB(MOD&DEMOD)
W6-F46B(AUDIO)
W6-F46A(AUDIO)
CN31-7-CN81-7(RA&HA&RT)
W1-F11A(TBC&SYNC GEN)
W3-F27AB(MOD&DEMOD)
W3-F31AB(MOD&DEMOD)
W5-F47B(SERVO&DRIVE&AT)
W3-F28AB(MOD&DEMOD)
W3-F32AB(MOD&DEMOD)
CN31-8-CN81-7(RA&HA&RT)
CN20-24B-CN50-24B-B1-R11A(SYSCON)
CN31-9-CN81-9(RA&HA&RT)
CN31-10-CN81-10(RA&HA&RT)
CN31-12-CN81-12(RA&HA&RT)
CN31-13-CN81-13(RA&HA&RT)
CN31-14-CN81-14(RA&HA&RT)
CN31-15-CN81-15(RA&HA&RT)
W3-F29AB(MOD&DEMOD)
W3-F33AB(MOD&DEMOD)
AT REF H SW NOT USED AU-65 (FOR AU-63,665,760)
IC601,Q602~606
INV BUFFER
Y CH1 PCM GATE R23A — CN300-1 (RA.HA.RE)
Y CH2 PCM GATE R24A — CN300-2 (RA.HA.RE)
C CH1 PCM GATE R23B — CN300-4 (RA.HA.RE)
C CH2 PCM GATE R24B — CN300-5 (RA.HA.RE)
PCM GATE R26B — CN301-2 (RA.HA.RE)
PCM HSW R25B — CN301-1 (RA.HA.RE)
NOT USED FOR AU-65/63/62
CAPB CAP ON L
DRMB DRUM ON L
REC REC
EDSB EDIT START
MONB MOD ON
EEHB EE MODE
RPHB R/P HEAD
AONB AT ON
H ERROR COMPARATOR
REF
CONTROL CIRCUIT
≪AUTO H≫
VARIABLE DL
AUTO H ON
AUTO H OFF
ON L/OFF H
≪I/O SECTION≫
SERIAL → PARALLEL SHIFTREGISTER
ONE SHOT PULSE
T H
CTL REC — TO W5 1/6
CTL EDIT L
NCTLED — TO W5 1/6
REC — TO W5 5/6
IC16
BUFFER
DRUM SERVO
S FRAMING R7A — CN20-30A—CN50-30A (SYSCON)
Y PB SYNC — TO W5 6/6
Y REC
CTL REC
AU-665,760
IC19
PULSE GEN

			REFERENCE SIG.	COMPARISON SIG.
DRUM SERVO	SPEED CONTROL	REC	CLOCK	DRUM FG
		PB	CLOCK	DRUM FG
	PHASE CONTROL	REC	V-SYNC	H. SW
		PB	V-SYNC	H. SW

W5 (SERVO) BLOCK DIAGRAM 3/6 (REEL SERVO SECTION)

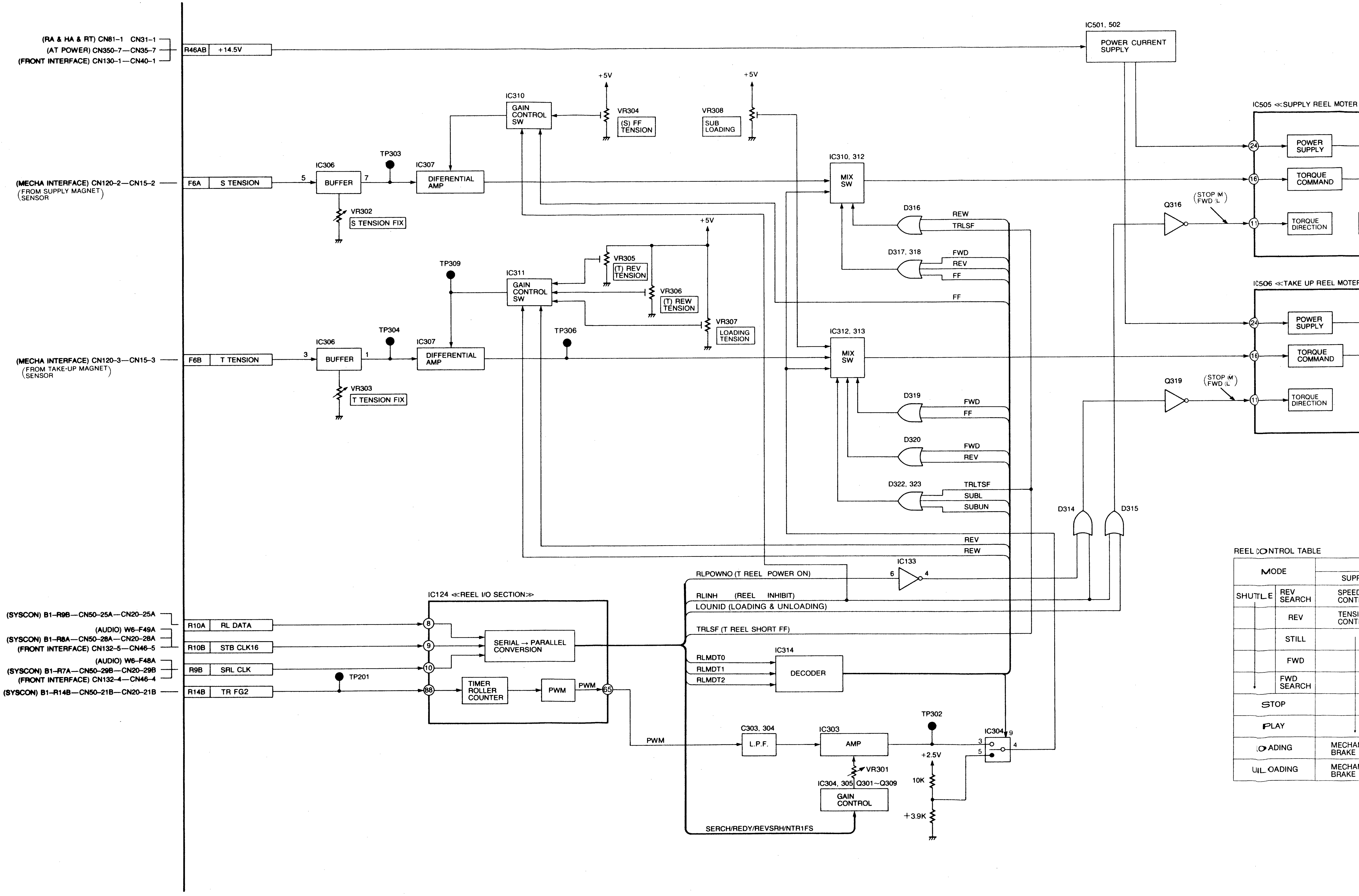
(RA & HA & RT) CN81–1 CN31–1
(AT POWER) CN350–7—CN35–7
(FRONT INTERFACE) CN130–1—CN40–1
R46AB
+14.5V
IC501, 502
POWER CURRENT SUPPLY
IC505 ≪SUPPLY REEL MOTER
POWER SUPPLY
TORQUE COMMAND
TORQUE DIRECTION
Q316
(STOP :M FWD :L)
IC506 ≪TAKE UP REEL MOTER
Q319
24
16
11
+5V
IC310
GAIN CONTROL SW
VR304
(S) FF TENSION
VR308
SUB LOADING
IC310, 312
MIX SW
(MECHA INTERFACE) CN120–2—CN15–2
(FROM SUPPLY MAGNET SENSOR)
F6A
S TENSION
IC306
BUFFER
5
7
TP303
IC307
DIFERENTIAL AMP
VR302
S TENSION FIX
D316
REW
TRLSF
D317, 318
FWD
REV
FF
TP309
VR305
(T) REV TENSION
IC311
GAIN CONTROL SW
VR306
(T) REW TENSION
VR307
LOADING TENSION
TP304
TP306
IC312, 313
(MECHA INTERFACE) CN120–3—CN15–3
(FROM TAKE-UP MAGNET SENSOR)
F6B
T TENSION
3
1
DIFFERENTIAL AMP
VR303
T TENSION FIX
D319
D320
D322, 323
TRLTSF
SUBL
SUBUN
D314
D315
IC133
6
4
RLPOWNO (T REEL POWER ON)
RLINH (REEL INHIBIT)
LOUNID (LOADING & UNLOADING)
TRLSF (T REEL SHORT FF)
RLMDT0
RLMDT1
RLMDT2
IC314
DECODER
IC124 ≪REEL I/O SECTION≫
(SYSCON) B1–R9B—CN50–25A—CN20–25A
(AUDIO) W6–F49A
(SYSCON) B1–R8A—CN50–28A—CN20–28A
(FRONT INTERFACE) CN132–5—CN46–5
(AUDIO) W6–F48A
(SYSCON) B1–R7A—CN50–29B—CN20–29B
(FRONT INTERFACE) CN132–4—CN46–4
(SYSCON) B1–R14B—CN50–21B—CN20–21B
R10A
RL DATA
R10B
STB CLK16
R9B
SRL CLK
R14B
TR FG2
TP201
8
9
10
88
65
SERIAL → PARALLEL CONVERSION
TIMER ROLLER COUNTER
PWM
C303, 304
L.P.F.
IC303
AMP
VR301
IC304, 305 Q301~Q309
GAIN CONTROL
SERCH/REDY/REVSRH/NTR1FS
TP302
+2.5V
10K
+3.9K
IC304
3
5
9
4

REEL CONTROL TABLE

MODE		SUPP
SHUTTLE	REV SEARCH	SPEED CONT
	REV	TENSI CONT
	STILL	
	FWD	
	FWD SEARCH	
STOP		
PLAY		
LOADING		MECHA BRAKE
UNLOADING		MECHA BRAKE

K DIAGRAM 3/6 (REEL SERVO SECTION)

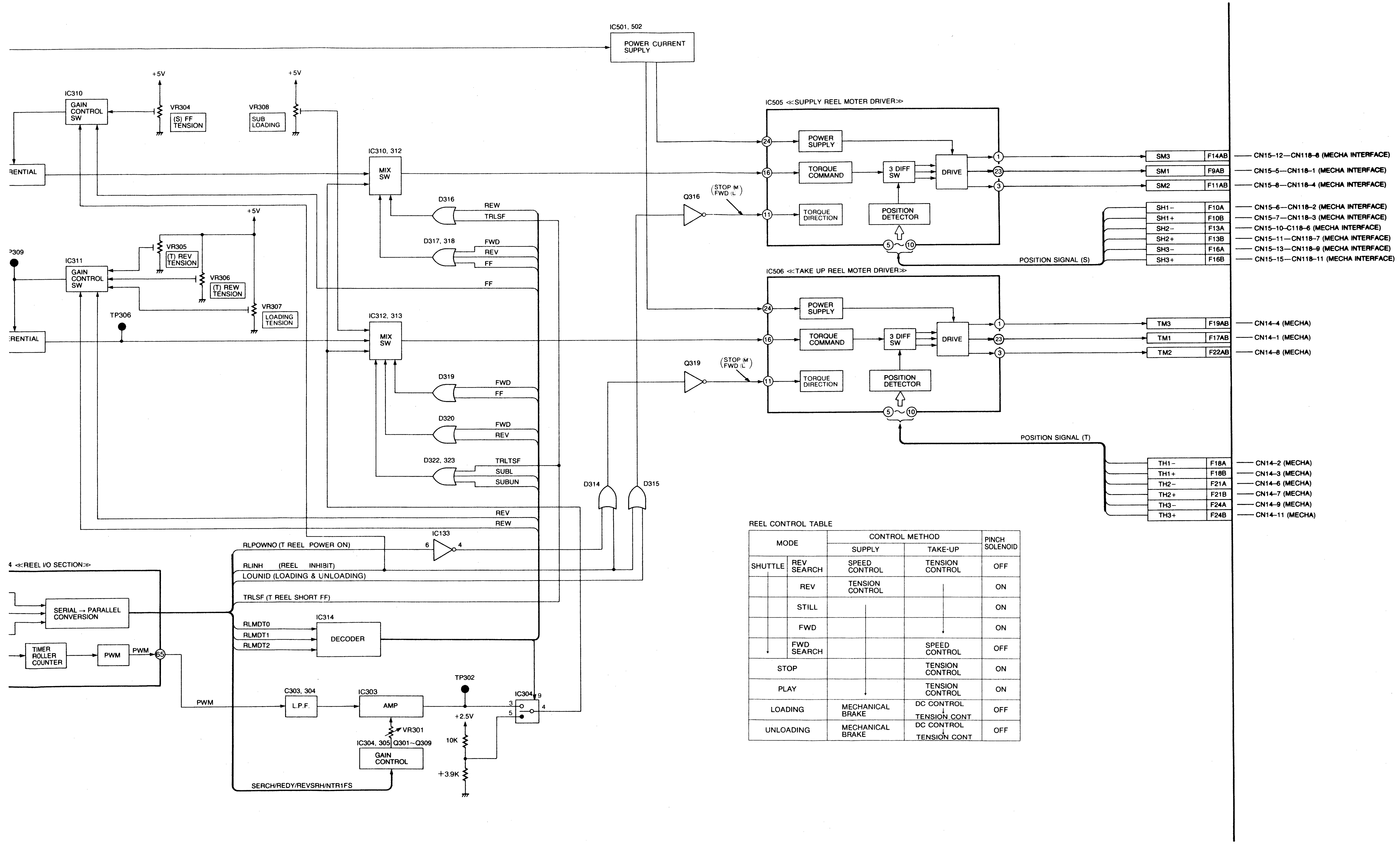
IC501, 502
POWER CURRENT SUPPLY
+5V
+5V
IC310
GAIN CONTROL SW
VR304
(S) FF TENSION
VR308
SUB LOADING
RENTIAL
IC310, 312
MIX SW
D316
REW
TRLSF
+5V
D317, 318
FWD
REV
FF
FF
P309
IC311
GAIN CONTROL SW
VR305
(T) REV TENSION
VR306
(T) REW TENSION
VR307
LOADING TENSION
TP306
RENTIAL
IC312, 313
MIX SW
D319
FWD
FF
D320
FWD
REV
D322, 323
TRLTSF
SUBL
SUBUN
D314
D315
REV
REW
IC133
6
4
RLPOWNO (T REEL POWER ON)
4 ≪REEL I/O SECTION≫
RLINH (REEL INHIBIT)
LOUNID (LOADING & UNLOADING)
TRLSF (T REEL SHORT FF)
SERIAL → PARALLEL CONVERSION
IC314
RLMDT0
RLMDT1
RLMDT2
DECODER
TIMER ROLLER COUNTER
PWM
PWM
65
PWM
C303, 304
L.P.F.
IC303
AMP
TP302
+2.5V
IC304
9
3
5
4
VR301
IC304, 305 Q301~Q309
GAIN CONTROL
10K
+3.9K
SERCH/REDY/REVSRH/NTR1FS
IC505 ≪SUPPLY REEL MOTER DRIVER≫
24
POWER SUPPLY
16
TORQUE COMMAND
3 DIFF SW
DRIVE
1
23
3
Q316
(STOP (M) FWD (L))
11
TORQUE DIRECTION
POSITION DETECTOR
5~10
POSITION SIGNAL (S)
SM3 F14AB — CN15-12—CN118-8 (MECHA INTERFACE)
SM1 F9AB — CN15-5—CN118-1 (MECHA INTERFACE)
SM2 F11AB — CN15-8—CN118-4 (MECHA INTERFACE)
SH1− F10A — CN15-6—CN118-2 (MECHA INTERFACE)
SH1+ F10B — CN15-7—CN118-3 (MECHA INTERFACE)
SH2− F13A — CN15-10-C118-6 (MECHA INTERFACE)
SH2+ F13B — CN15-11—CN118-7 (MECHA INTERFACE)
SH3− F16A — CN15-13—CN118-9 (MECHA INTERFACE)
SH3+ F16B — CN15-15—CN118-11 (MECHA INTERFACE)
IC506 ≪TAKE UP REEL MOTER DRIVER≫
24
POWER SUPPLY
16
TORQUE COMMAND
3 DIFF SW
DRIVE
1
23
3
Q319
(STOP (M) FWD (L))
11
TORQUE DIRECTION
POSITION DETECTOR
5~10
POSITION SIGNAL (T)
TM3 F19AB — CN14-4 (MECHA)
TM1 F17AB — CN14-1 (MECHA)
TM2 F22AB — CN14-8 (MECHA)
TH1− F18A — CN14-2 (MECHA)
TH1+ F18B — CN14-3 (MECHA)
TH2− F21A — CN14-6 (MECHA)
TH2+ F21B — CN14-7 (MECHA)
TH3− F24A — CN14-9 (MECHA)
TH3+ F24B — CN14-11 (MECHA)

REEL CONTROL TABLE

MODE		CONTROL METHOD		PINCH SOLENOID
		SUPPLY	TAKE-UP	
SHUTTLE	REV SEARCH	SPEED CONTROL	TENSION CONTROL	OFF
↓	REV	TENSION CONTROL	↓	ON
↓	STILL	↓	↓	ON
↓	FWD	↓	↓	ON
↓	FWD SEARCH	↓	SPEED CONTROL	OFF
STOP		↓	TENSION CONTROL	ON
PLAY		↓	TENSION CONTROL	ON
LOADING		MECHANICAL BRAKE	DC CONTROL ↓ TENSION CONT	OFF
UNLOADING		MECHANICAL BRAKE	DC CONTROL ↓ TENSION CONT	OFF

W5 (SERVO) BLOCK DIAGRAM 4/6 (CTL RECOVER SECTION)

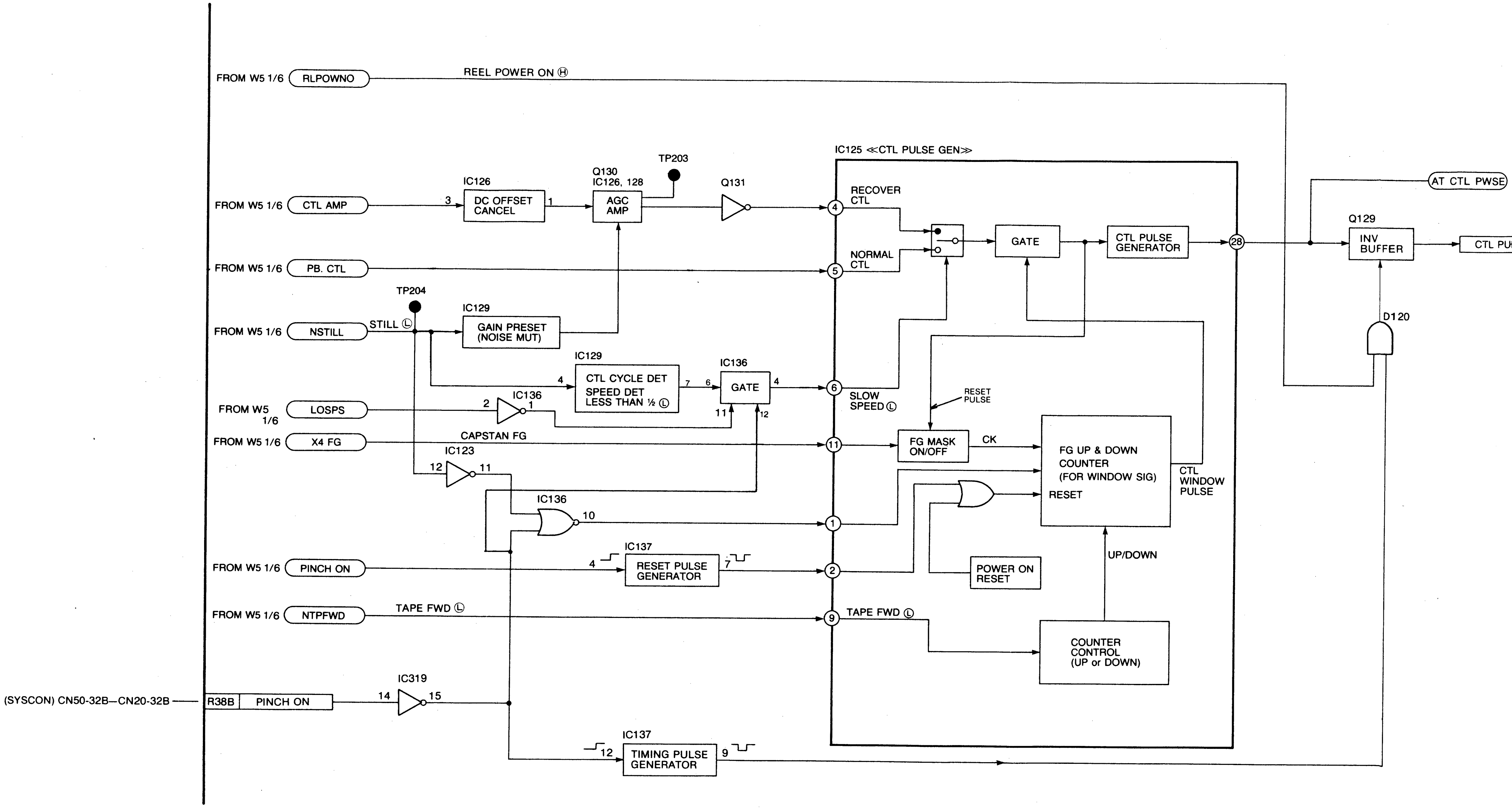

FROM W5 1/6
RLPOWNO
REEL POWER ON Ⓗ
FROM W5 1/6
CTL AMP
IC126
DC OFFSET CANCEL
Q130
IC126, 128
AGC AMP
TP203
Q131
FROM W5 1/6
PB. CTL
TP204
FROM W5 1/6
NSTILL
STILL Ⓛ
IC129
GAIN PRESET (NOISE MUT)
IC129
CTL CYCLE DET
SPEED DET
LESS THAN ½ Ⓛ
IC136
GATE
IC136
FROM W5 1/6
LOSPS
FROM W5 1/6
X4 FG
CAPSTAN FG
IC123
IC136
FROM W5 1/6
PINCH ON
IC137
RESET PULSE GENERATOR
FROM W5 1/6
NTPFWD
TAPE FWD Ⓛ
(SYSCON) CN50-32B—CN20-32B
R38B
PINCH ON
IC319
IC137
TIMING PULSE GENERATOR
IC125 ≪CTL PULSE GEN≫
RECOVER CTL
NORMAL CTL
GATE
CTL PULSE GENERATOR
SLOW SPEED Ⓛ
RESET PULSE
FG MASK ON/OFF
CK
FG UP & DOWN COUNTER (FOR WINDOW SIG)
RESET
CTL WINDOW PULSE
POWER ON RESET
UP/DOWN
TAPE FWD Ⓛ
COUNTER CONTROL (UP or DOWN)
AT CTL PWSE
Q129
INV BUFFER
CTL PU
D120

O) BLOCK DIAGRAM 4/6 (CTL RECOVER SECTION)

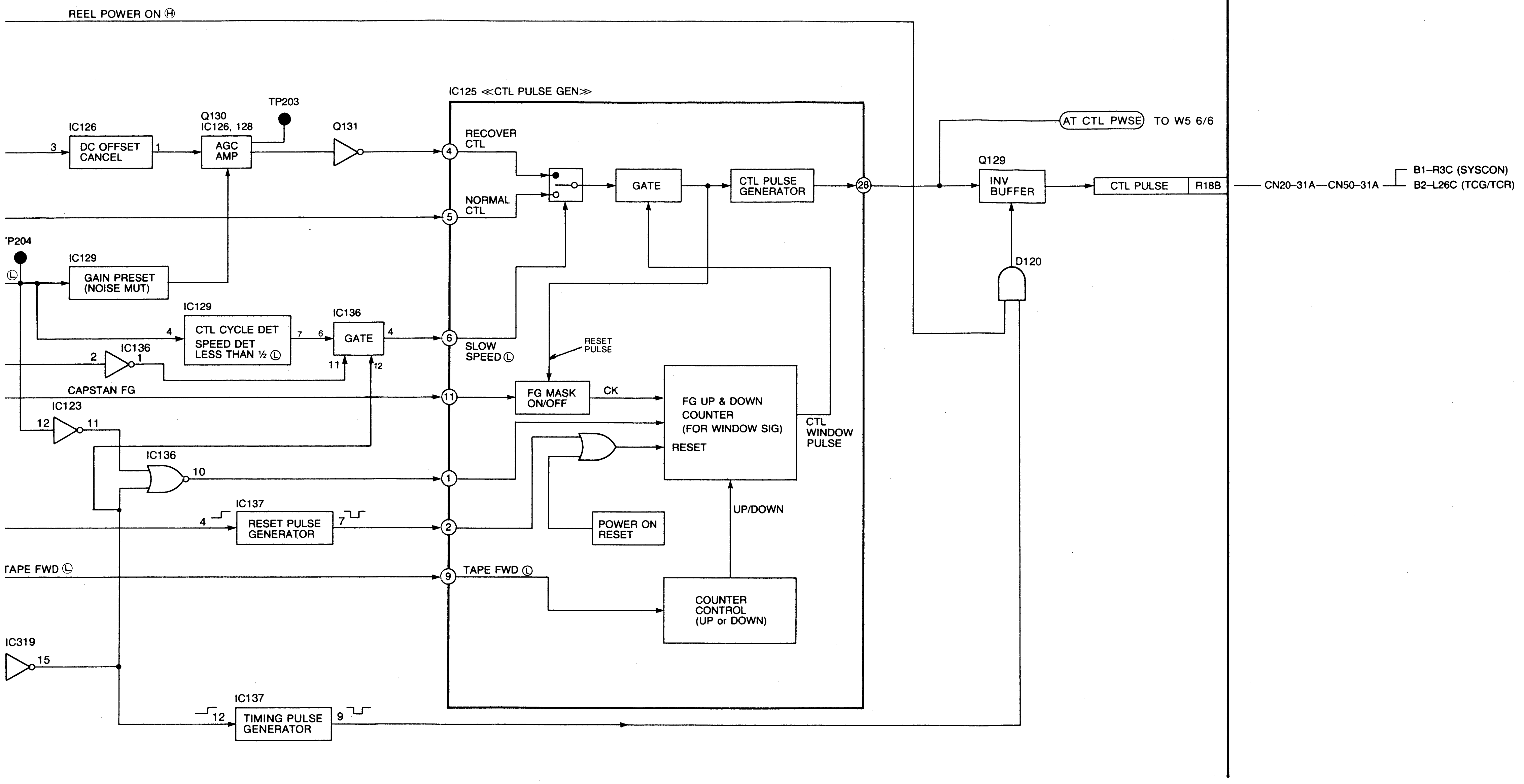
REEL POWER ON Ⓗ
IC125 ≪CTL PULSE GEN≫
TP203
Q130
IC126, 128
IC126
DC OFFSET CANCEL
AGC AMP
Q131
RECOVER CTL
NORMAL CTL
GATE
CTL PULSE GENERATOR
AT CTL PWSE
TO W5 6/6
Q129
INV BUFFER
CTL PULSE
R18B
CN20-31A—CN50-31A
B1-R3C (SYSCON)
B2-L26C (TCG/TCR)
D120
P204
IC129
GAIN PRESET (NOISE MUT)
CTL CYCLE DET
SPEED DET LESS THAN ½ Ⓛ
IC136
SLOW SPEED Ⓛ
RESET PULSE
CAPSTAN FG
IC123
FG MASK ON/OFF
CK
FG UP & DOWN COUNTER (FOR WINDOW SIG)
RESET
CTL WINDOW PULSE
IC137
RESET PULSE GENERATOR
POWER ON RESET
UP/DOWN
TAPE FWD Ⓛ
COUNTER CONTROL (UP or DOWN)
IC319
TIMING PULSE GENERATOR
1 2 3 4 5 6 7 9 10 11 12 15 28

W5 (SERVO) BLOCK DIAGRAM 5/6 (CF SERVO SECTION)

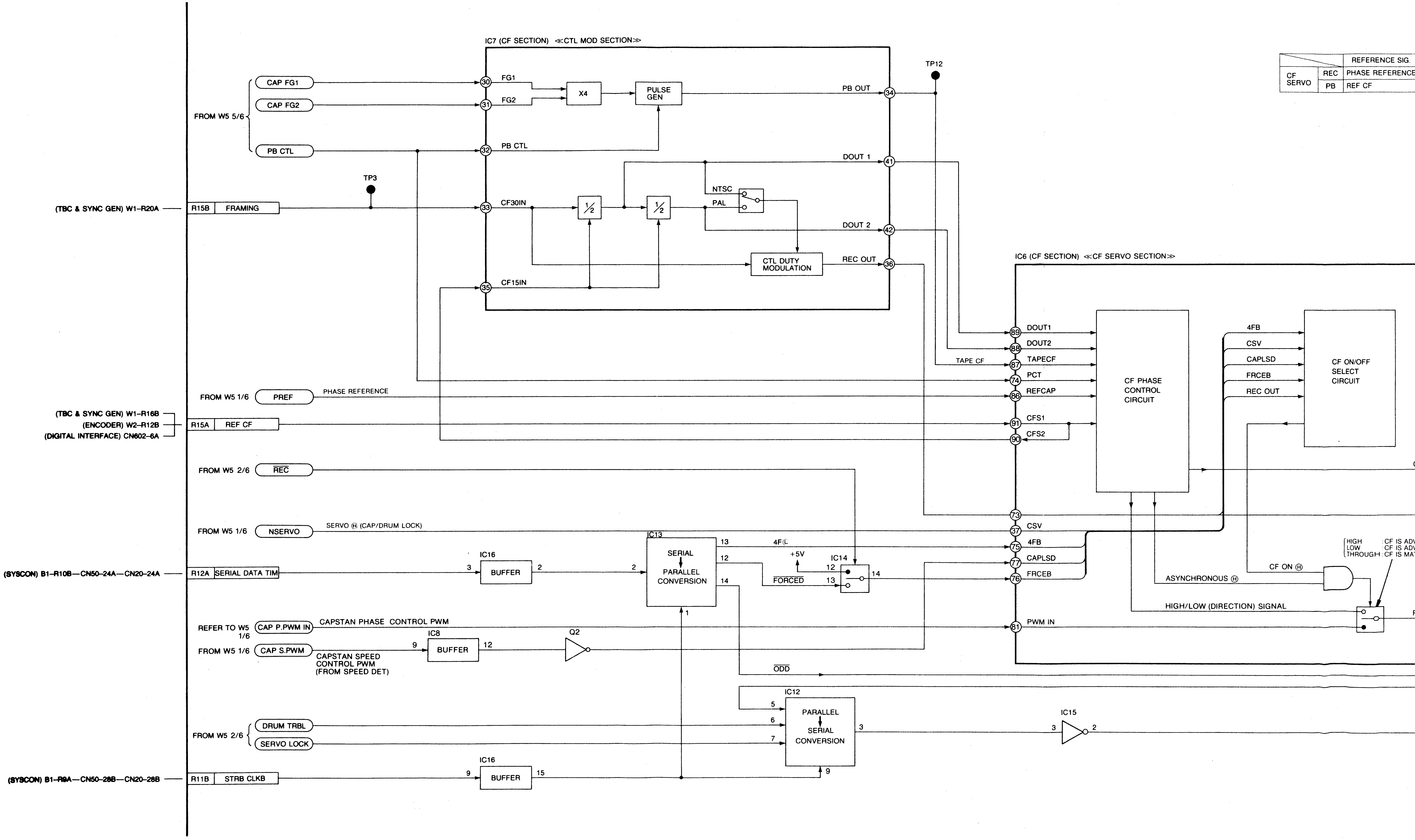
IC7 (CF SECTION) ≪CTL MOD SECTION≫
FROM W5 5/6
CAP FG1
CAP FG2
PB CTL
30
31
32
33
34
35
36
41
42
FG1
FG2
X4
PULSE GEN
PB OUT
TP12
PB CTL
DOUT 1
TP3
NTSC
PAL
(TBC & SYNC GEN) W1–R20A
R15B
FRAMING
CF30IN
½
½
DOUT 2
CTL DUTY MODULATION
REC OUT
CF15IN
IC6 (CF SECTION) ≪CF SERVO SECTION≫
89
88
87
74
86
91
90
73
37
75
77
76
81
DOUT1
DOUT2
TAPECF
TAPE CF
PCT
REFCAP
CFS1
CFS2
CF PHASE CONTROL CIRCUIT
4FB
CSV
CAPLSD
FRCEB
REC OUT
CF ON/OFF SELECT CIRCUIT
FROM W5 1/6
PREF
PHASE REFERENCE
(TBC & SYNC GEN) W1–R16B
(ENCODER) W2–R12B
(DIGITAL INTERFACE) CN602–6A
R15A
REF CF
FROM W5 2/6
REC
FROM W5 1/6
NSERVO
SERVO Ⓗ (CAP/DRUM LOCK)
IC13
SERIAL ↓ PARALLEL CONVERSION
13
12
14
2
1
4FⓁ
+5V
IC14
12
13
14
FORCED
CSV
4FB
CAPLSD
FRCEB
PWM IN
ASYNCHRONOUS Ⓗ
CF ON Ⓗ
HIGH/LOW (DIRECTION) SIGNAL
HIGH : CF IS ADV
LOW : CF IS ADV
THROUGH : CF IS MAT
IC16
3
BUFFER
2
(SYSCON) B1–R10B—CN50–24A—CN20–24A
R12A
SERIAL DATA TIM
REFER TO W5 1/6
CAP P.PWM IN
CAPSTAN PHASE CONTROL PWM
FROM W5 1/6
CAP S.PWM
IC8
9
BUFFER
12
Q2
CAPSTAN SPEED CONTROL PWM (FROM SPEED DET)
ODD
IC12
5
6
7
PARALLEL ↓ SERIAL CONVERSION
3
9
IC15
3
2
FROM W5 2/6
DRUM TRBL
SERVO LOCK
IC16
9
BUFFER
15
(SYSCON) B1–R9A—CN50–28B—CN20–28B
R11B
STRB CLKB

		REFERENCE SIG.
CF SERVO	REC	PHASE REFERENCE
	PB	REF CF

AGRAM 5/6 (CF SERVO SECTION)

		REFERENCE SIG.	COMPARISON SIG.
CF SERVO	REC	PHASE REFERENCE	REF CF
	PB	REF CF	TAPE CF

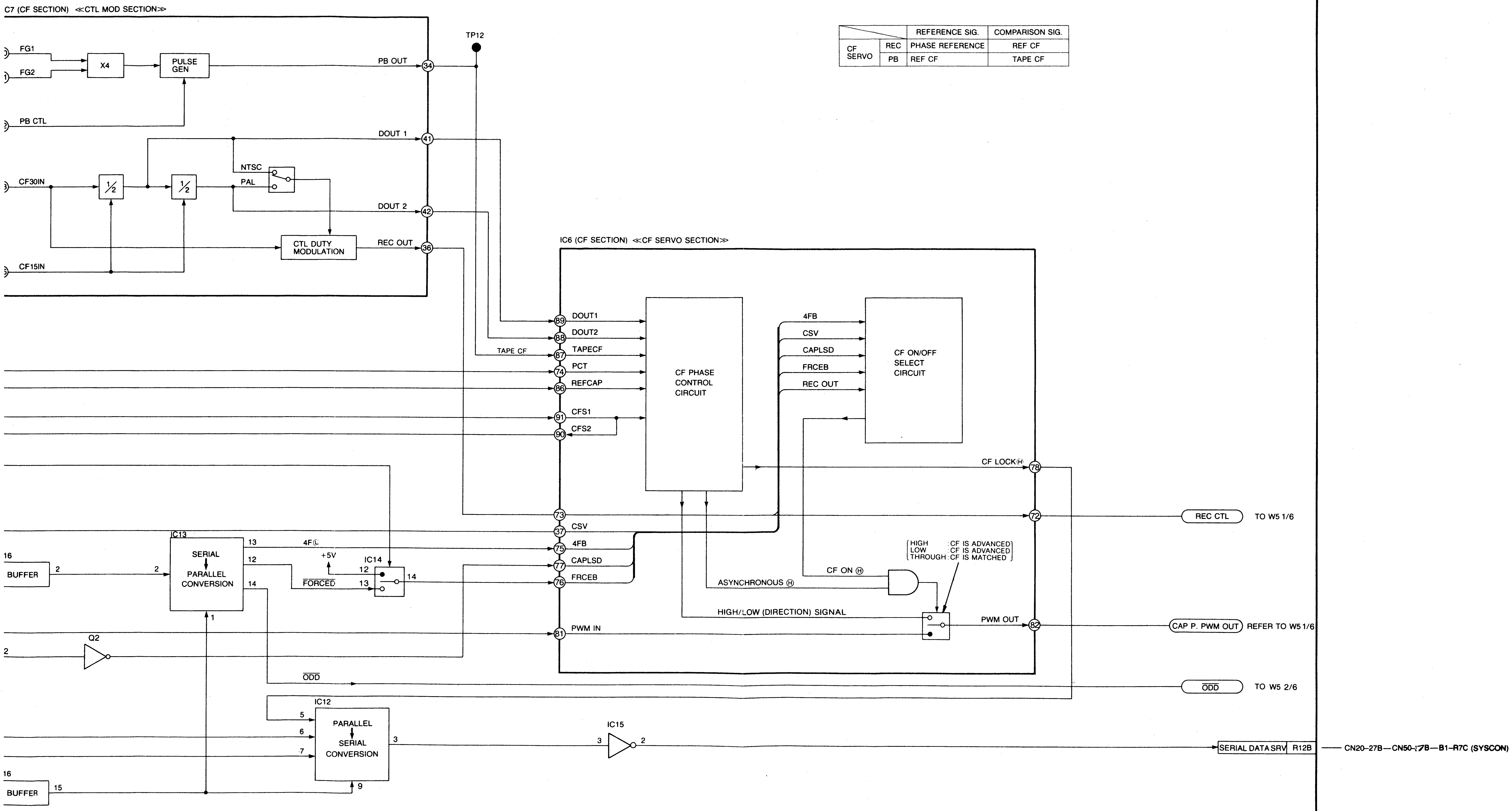
C7 (CF SECTION) ≪CTL MOD SECTION≫
FG1
FG2
X4
PULSE GEN
PB OUT
34
TP12
PB CTL
DOUT 1
41
NTSC
PAL
CF30IN
½
½
DOUT 2
42
CTL DUTY MODULATION
REC OUT
36
CF15IN
IC6 (CF SECTION) ≪CF SERVO SECTION≫
89 DOUT1
88 DOUT2
TAPE CF
87 TAPECF
74 PCT
86 REFCAP
91 CFS1
90 CFS2
CF PHASE CONTROL CIRCUIT
4FB
CSV
CAPLSD
FRCEB
REC OUT
CF ON/OFF SELECT CIRCUIT
CF LOCK Ⓗ 78
73
72
REC CTL
TO W5 1/6
37 CSV
75 4FB
77 CAPLSD
76 FRCEB
HIGH :CF IS ADVANCED
LOW :CF IS ADVANCED
THROUGH :CF IS MATCHED
CF ON Ⓗ
ASYNCHRONOUS Ⓗ
HIGH/LOW (DIRECTION) SIGNAL
PWM OUT 82
CAP P. PWM OUT
REFER TO W5 1/6
81 PWM IN
16
BUFFER
2
IC13
SERIAL ↓ PARALLEL CONVERSION
13
12
14
1
4FⓁ
+5V
IC14
FORCED
12
13
14
Q2
2
ODD
ODD
TO W5 2/6
IC12
5
6
7
PARALLEL ↓ SERIAL CONVERSION
3
9
IC15
3
2
SERIAL DATA SRV
R12B
CN20-27B—CN50-17B—B1-R7C (SYSCON)
16
BUFFER
15

W5 (SERVO) BLOCK DIAGRAM 6/6 (AT SECTION)[FOR AU-665,AU-63]

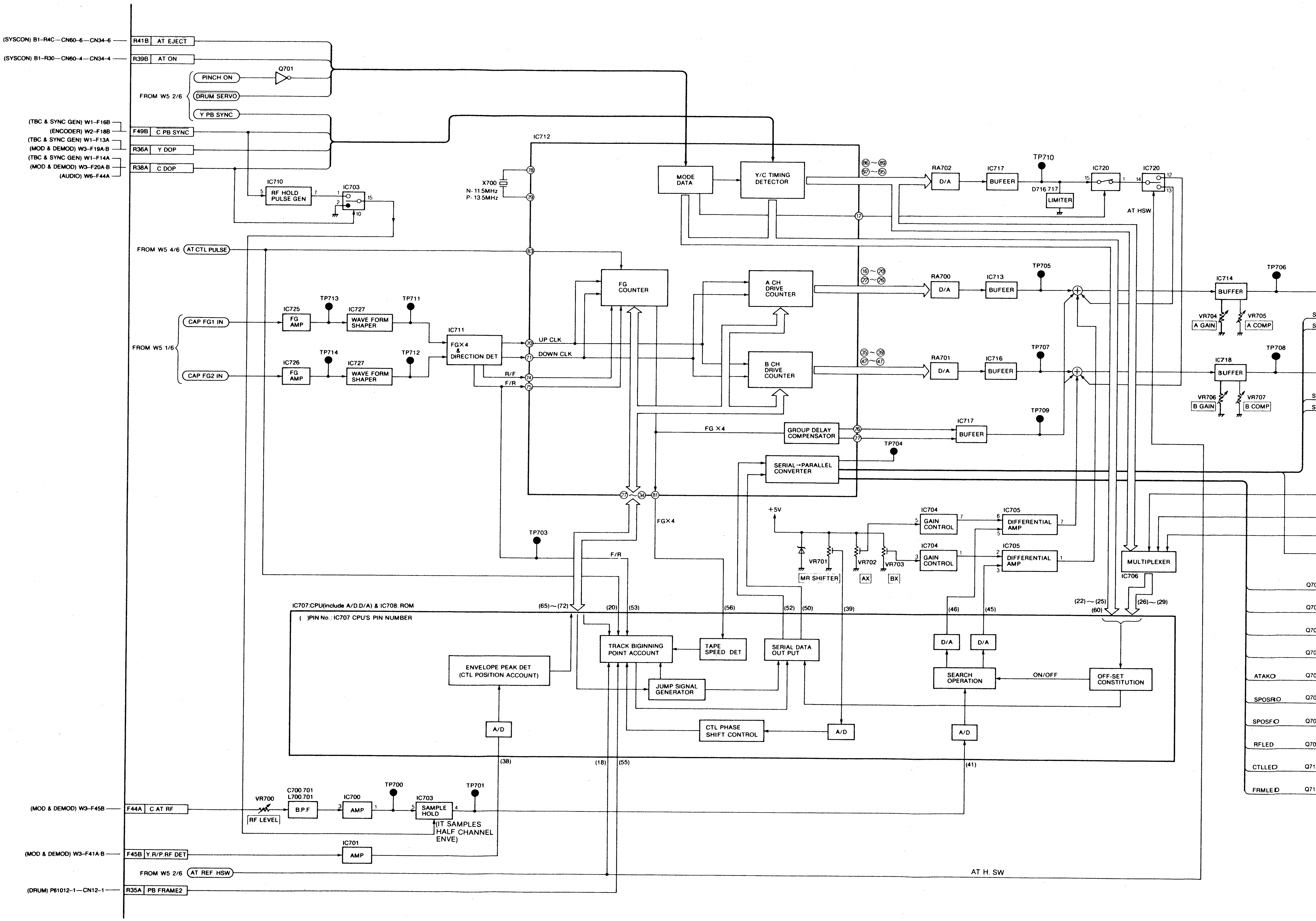

(SYSCON) B1-R4C—CN60-6—CN34-6
(SYSCON) B1-R30—CN60-4—CN34-4
(TBC & SYNC GEN) W1-F16B
(ENCODER) W2-F18B
(TBC & SYNC GEN) W1-F13A
(MOD & DEMOD) W3-F19A.B
(TBC & SYNC GEN) W1-F14A
(MOD & DEMOD) W3-F20A.B
(AUDIO) W6-F44A
R41B AT EJECT
R39B AT ON
Q701
PINCH ON
FROM W5 2/6
DRUM SERVO
Y PB SYNC
F49B C PB SYNC
R36A Y DOP
R38A C DOP
IC710
RF HOLD PULSE GEN
IC703
IC712
X700
N: 11.5MHz
P: 13.5MHz
MODE DATA
Y/C TIMING DETECTOR
RA702
D/A
IC717
BUFEER
TP710
D716 717
LIMITER
IC720
AT HSW
FROM W5 4/6
AT CTL PULSE
FG COUNTER
A CH DRIVE COUNTER
B CH DRIVE COUNTER
RA700
IC713
TP705
TP706
IC714
BUFFER
VR704
A GAIN
VR705
A COMP
RA701
IC716
TP707
TP708
IC718
VR706
B GAIN
VR707
B COMP
TP713
TP711
IC725
FG AMP
IC727
WAVE FORM SHAPER
FROM W5 1/6
CAP FG1 IN
CAP FG2 IN
IC726
TP714
TP712
IC711
FG×4 & DIRECTION DET
UP CLK
DOWN CLK
R/F
F/R
FG ×4
GROUP DELAY COMPENSATOR
TP709
TP704
SERIAL→PARALLEL CONVERTER
+5V
IC704
GAIN CONTROL
IC705
DIFFERENTIAL AMP
VR701
VR702
VR703
MR SHIFTER
AX
BX
MULTIPLEXER
IC706
TP703
FG×4
IC707:CPU(include A/D.D/A) & IC708: ROM
( )PIN No.: IC707 CPU'S PIN NUMBER
(65)~(72)
(20)
(53)
(56)
(52)
(50)
(39)
(46)
(45)
(22)~(25)
(60)
(26)~(29)
ENVELOPE PEAK DET (CTL POSITION ACCOUNT)
TRACK BIGINNING POINT ACCOUNT
TAPE SPEED DET
SERIAL DATA OUT PUT
JUMP SIGNAL GENERATOR
D/A
SEARCH OPERATION
ON/OFF
OFF-SET CONSTITUTION
CTL PHASE SHIFT CONTROL
A/D
(38)
(18)
(55)
(41)
(MOD & DEMOD) W3-F45B
F44A C AT RF
VR700
RF LEVEL
C700.701
L700.701
B.P.F
IC700
AMP
TP700
IC703
SAMPLE HOLD
TP701
(IT SAMPLES HALF CHANNEL ENVE)
(MOD & DEMOD) W3-F41A.B
F45B Y.R/P.RF DET
IC701
AMP
FROM W5 2/6
AT REF HSW
AT H. SW
(DRUM) P61012-1—CN12-1
R35A PB FRAME2
ATAKO
SPOSRO
SPOSFO
RFLED
CTLLED
FRMLED

DIAGRAM 6/6 (AT SECTION)[FOR AU-665,AU-63]

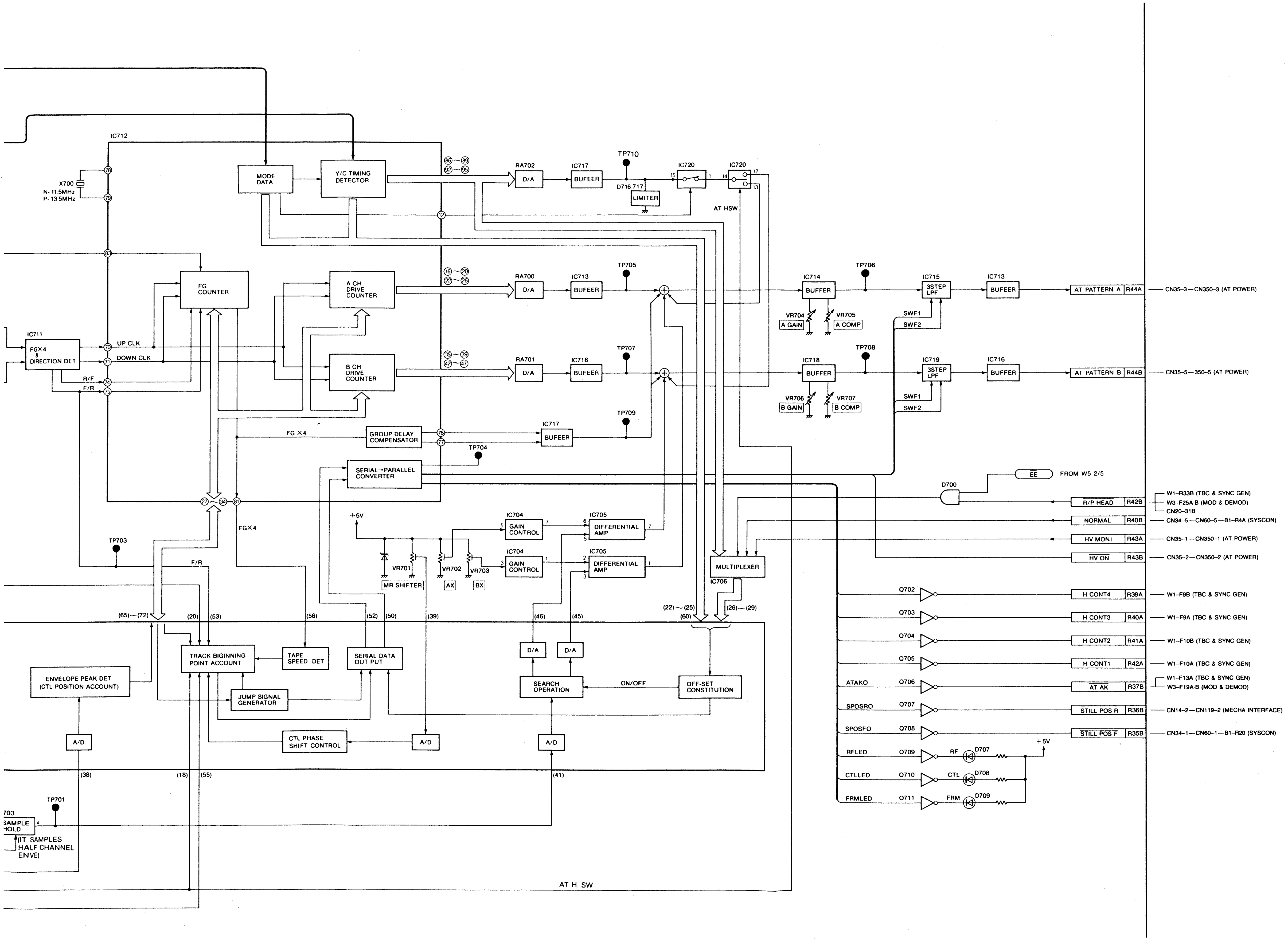

IC712
X700
N: 11.5MHz
P: 13.5MHz
MODE DATA
Y/C TIMING DETECTOR
FG COUNTER
A CH DRIVE COUNTER
B CH DRIVE COUNTER
IC711
FG×4 & DIRECTION DET
UP CLK
DOWN CLK
R/F
F/R
FG ×4
GROUP DELAY COMPENSATOR
SERIAL→PARALLEL CONVERTER
TP704
TP703
FG×4
RA702
D/A
IC717
BUFEER
TP710
D716 717
LIMITER
IC720
AT HSW
RA700
IC713
TP705
RA701
IC716
TP707
TP709
IC717
BUFEER
IC714
BUFFER
TP706
VR704
A GAIN
VR705
A COMP
IC715
3STEP LPF
SWF1
SWF2
IC713
BUFEER
AT PATTERN A
R44A
CN35-3—CN350-3 (AT POWER)
IC718
BUFFER
TP708
VR706
B GAIN
VR707
B COMP
IC719
3STEP LPF
IC716
BUFEER
AT PATTERN B
R44B
CN35-5—350-5 (AT POWER)
EE
FROM W5 2/5
D700
R/P HEAD
R42B
W1-R33B (TBC & SYNC GEN)
W3-F25A·B (MOD & DEMOD)
CN20-31B
NORMAL
R40B
CN34-5—CN60-5—B1-R4A (SYSCON)
HV MONI
R43A
CN35-1—CN350-1 (AT POWER)
HV ON
R43B
CN35-2—CN350-2 (AT POWER)
+5V
IC704
GAIN CONTROL
IC705
DIFFERENTIAL AMP
VR701
MR SHIFTER
VR702
AX
VR703
BX
MULTIPLEXER
IC706
(22)~(25)
(60)
(26)~(29)
(65)~(72)
(20)
(53)
(56)
(52)
(50)
(39)
(46)
(45)
TRACK BIGINNING POINT ACCOUNT
TAPE SPEED DET
SERIAL DATA OUT PUT
JUMP SIGNAL GENERATOR
CTL PHASE SHIFT CONTROL
A/D
D/A
SEARCH OPERATION
ON/OFF
OFF-SET CONSTITUTION
ENVELOPE PEAK DET (CTL POSITION ACCOUNT)
(38)
(18)
(55)
(41)
TP701
703
SAMPLE HOLD
(IT SAMPLES HALF CHANNEL ENVE)
AT H. SW
Q702
H CONT4
R39A
W1-F9B (TBC & SYNC GEN)
Q703
H CONT3
R40A
W1-F9A (TBC & SYNC GEN)
Q704
H CONT2
R41A
W1-F10B (TBC & SYNC GEN)
Q705
H CONT1
R42A
W1-F10A (TBC & SYNC GEN)
ATAKO
Q706
AT AK
R37B
W1-F13A (TBC & SYNC GEN)
W3-F19A·B (MOD & DEMOD)
SPOSRO
Q707
STILL POS R
R36B
CN14-2—CN119-2 (MECHA INTERFACE)
SPOSFO
Q708
STILL POS F
R35B
CN34-1—CN60-1—B1-R20 (SYSCON)
RFLED
Q709
RF
D707
+5V
CTLLED
Q710
CTL
D708
FRMLED
Q711
FRM
D709

W6 (AUDIO) BLOCK DIAGRAM 1/4 (LINEAR AUDIO SECTION)

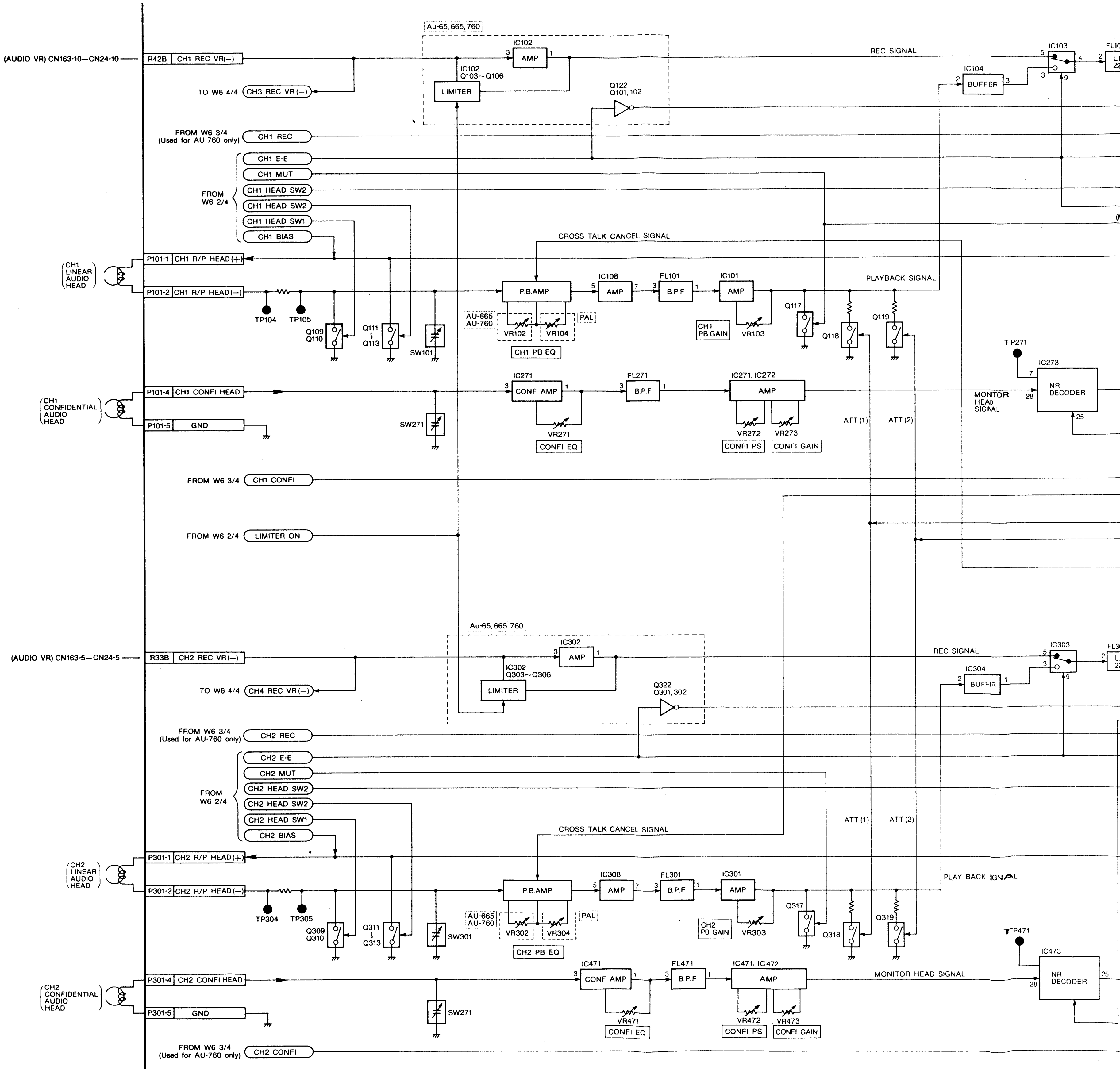

(AUDIO VR) CN163-10—CN24-10
R42B
CH1 REC VR(—)
TO W6 4/4
CH3 REC VR(—)
Au-65, 665, 760
IC102
AMP
IC102
Q103—Q106
LIMITER
Q122
Q101, 102
REC SIGNAL
IC104
BUFFER
IC103
FROM W6 3/4
(Used for AU-760 only)
CH1 REC
FROM W6 2/4
CH1 E-E
CH1 MUT
CH1 HEAD SW2
CH1 HEAD SW2
CH1 HEAD SW1
CH1 BIAS
CROSS TALK CANCEL SIGNAL
CH1 LINEAR AUDIO HEAD
P101-1
CH1 R/P HEAD(+)
P101-2
CH1 R/P HEAD(—)
TP104
TP105
Q109
Q110
Q111
Q113
SW101
P.B.AMP
AU-665
AU-760
VR102
VR104
PAL
CH1 PB EQ
IC108
AMP
FL101
B.P.F
IC101
AMP
CH1 PB GAIN
VR103
PLAYBACK SIGNAL
Q117
Q118
Q119
TP271
IC273
NR DECODER
CH1 CONFIDENTIAL AUDIO HEAD
P101-4
CH1 CONFI HEAD
P101-5
GND
SW271
IC271
CONF AMP
VR271
CONFI EQ
FL271
B.P.F
IC271, IC272
AMP
VR272
VR273
CONFI PS
CONFI GAIN
ATT (1)
ATT (2)
MONTOR HEAD SIGNAL
FROM W6 3/4
CH1 CONFI
FROM W6 2/4
LIMITER ON
Au-65, 665, 760
IC302
AMP
IC302
Q303—Q306
LIMITER
Q322
Q301, 302
(AUDIO VR) CN163-5—CN24-5
R33B
CH2 REC VR(—)
TO W6 4/4
CH4 REC VR(—)
REC SIGNAL
IC304
BUFFER
IC303
FROM W6 3/4
(Used for AU-760 only)
CH2 REC
FROM W6 2/4
CH2 E-E
CH2 MUT
CH2 HEAD SW2
CH2 HEAD SW2
CH2 HEAD SW1
CH2 BIAS
CROSS TALK CANCEL SIGNAL
ATT (1)
ATT (2)
CH2 LINEAR AUDIO HEAD
P301-1
CH2 R/P HEAD(+)
P301-2
CH2 R/P HEAD(—)
TP304
TP305
Q309
Q310
Q311
Q313
SW301
P.B.AMP
AU-665
AU-760
VR302
VR304
PAL
CH2 PB EQ
IC308
AMP
FL301
B.P.F
IC301
AMP
CH2 PB GAIN
VR303
Q317
Q318
Q319
PLAY BACK SIGNAL
TP471
IC473
NR DECODER
CH2 CONFIDENTIAL AUDIO HEAD
P301-4
CH2 CONFI HEAD
P301-5
GND
SW271
IC471
CONF AMP
VR471
CONFI EQ
FL471
B.P.F
IC471, IC472
AMP
VR472
VR473
CONFI PS
CONFI GAIN
MONITOR HEAD SIGNAL
FROM W6 3/4
(Used for AU-760 only)
CH2 CONFI

CTION)

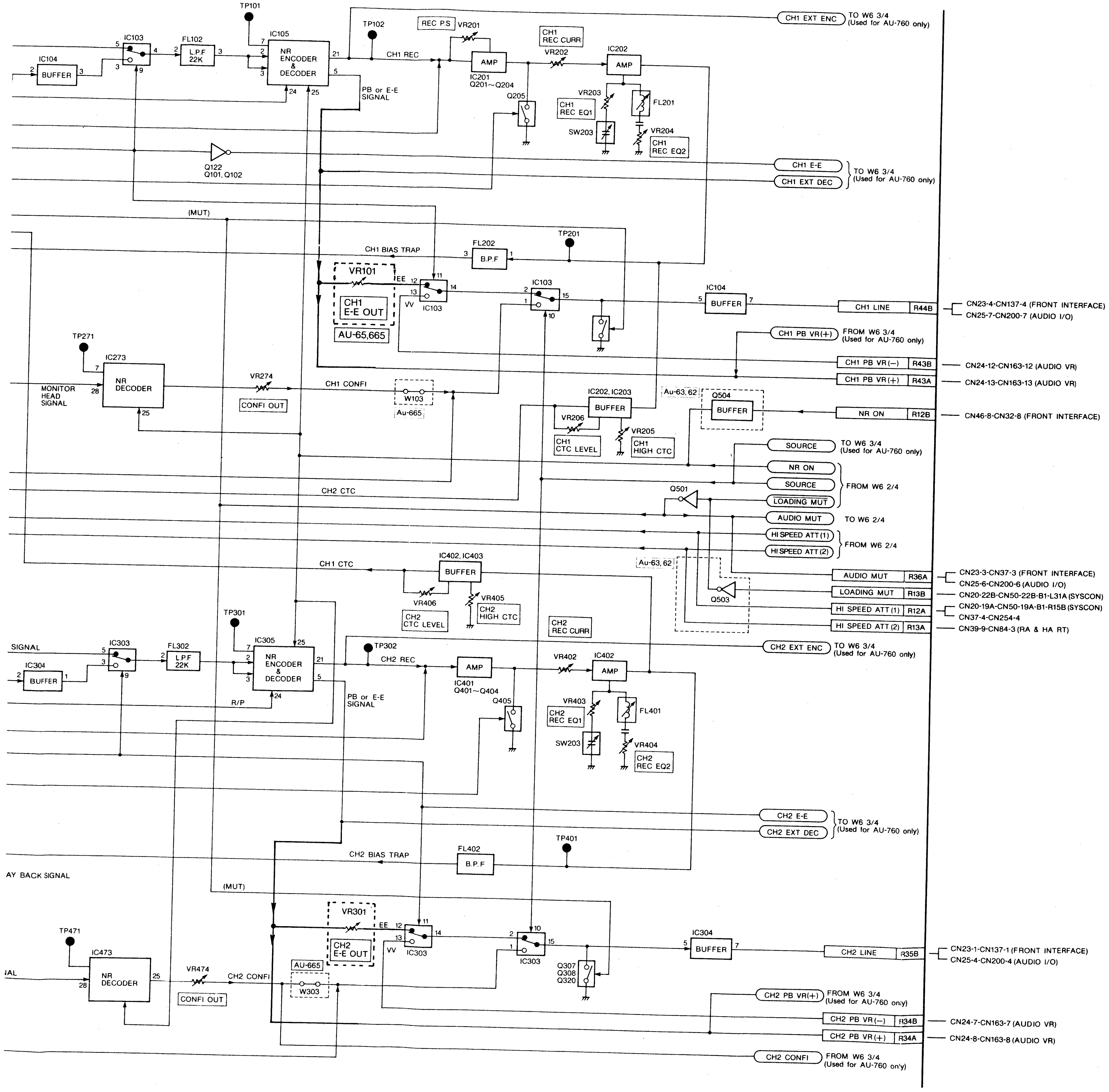

TP101
IC103
FL102
L.P.F 22K
IC105
NR ENCODER & DECODER
IC104
BUFFER
TP102
REC P.S
VR201
CH1 REC
AMP
IC201 Q201~Q204
Q205
CH1 REC CURR
VR202
IC202
AMP
VR203
CH1 REC EQ1
SW203
FL201
VR204
CH1 REC EQ2
PB or E-E SIGNAL
CH1 EXT ENC
TO W6 3/4 (Used for AU-760 only)
Q122
Q101, Q102
CH1 E-E
CH1 EXT DEC
TO W6 3/4 (Used for AU-760 only)
(MUT)
CH1 BIAS TRAP
FL202
B.P.F
TP201
VR101
CH1 E-E OUT
AU-65,665
EE
VV
IC103
IC104
BUFFER
CH1 LINE
R44B
CN23-4-CN137-4 (FRONT INTERFACE)
CN25-7-CN200-7 (AUDIO I/O)
CH1 PB VR(+)
FROM W6 3/4 (Used for AU-760 only)
CH1 PB VR(−)
R43B
CN24-12-CN163-12 (AUDIO VR)
CH1 PB VR(+)
R43A
CN24-13-CN163-13 (AUDIO VR)
TP271
IC273
NR DECODER
MONITOR HEAD SIGNAL
VR274
CONFI OUT
CH1 CONFI
W103
Au-665
IC202, IC203
BUFFER
VR206
CH1 CTC LEVEL
VR205
CH1 HIGH CTC
Au-63, 62
Q504
BUFFER
NR ON
R12B
CN46-8-CN32-8 (FRONT INTERFACE)
SOURCE
TO W6 3/4 (Used for AU-760 only)
NR ON
SOURCE
LOADING MUT
FROM W6 2/4
Q501
CH2 CTC
AUDIO MUT
TO W6 2/4
HI SPEED ATT(1)
HI SPEED ATT(2)
FROM W6 2/4
CH1 CTC
IC402, IC403
BUFFER
VR406
CH2 CTC LEVEL
VR405
CH2 HIGH CTC
Au-63, 62
Q503
AUDIO MUT
R36A
LOADING MUT
R13B
HI SPEED ATT (1)
R12A
HI SPEED ATT (2)
R13A
CN23-3-CN37-3 (FRONT INTERFACE)
CN25-6-CN200-6 (AUDIO I/O)
CN20-22B-CN50-22B-B1-L31A (SYSCON)
CN20-19A-CN50-19A-B1-R15B (SYSCON)
CN37-4-CN254-4
CN39-9-CN84-3 (RA & HA RT)
TP301
SIGNAL
IC303
FL302
L.P.F 22K
IC305
NR ENCODER & DECODER
IC304
BUFFER
R/P
TP302
CH2 REC
AMP
IC401 Q401~Q404
Q405
CH2 REC CURR
VR402
IC402
AMP
CH2 EXT ENC
TO W6 3/4 (Used for AU-760 only)
PB or E-E SIGNAL
VR403
CH2 REC EQ1
FL401
SW203
VR404
CH2 REC EQ2
CH2 E-E
CH2 EXT DEC
TO W6 3/4 (Used for AU-760 only)
AY BACK SIGNAL
CH2 BIAS TRAP
FL402
B.P.F
TP401
(MUT)
VR301
CH2 E-E OUT
AU-665
W303
EE
VV
IC303
IC303
Q307 Q308 Q320
IC304
BUFFER
CH2 LINE
R35B
CN23-1-CN137-1 (FRONT INTERFACE)
CN25-4-CN200-4 (AUDIO I/O)
TP471
IC473
NR DECODER
IAL
VR474
CH2 CONFI
CONFI OUT
CH2 PB VR(+)
FROM W6 3/4 (Used for AU-760 only)
CH2 PB VR(−)
R34B
CN24-7-CN163-7 (AUDIO VR)
CH2 PB VR(+)
R34A
CN24-8-CN163-8 (AUDIO VR)
CH2 CONFI
FROM W6 3/4 (Used for AU-760 only)

W6 (AUDIO) BLOCK DIAGRAM 2/4 (REC BIAS & TC SECTION)

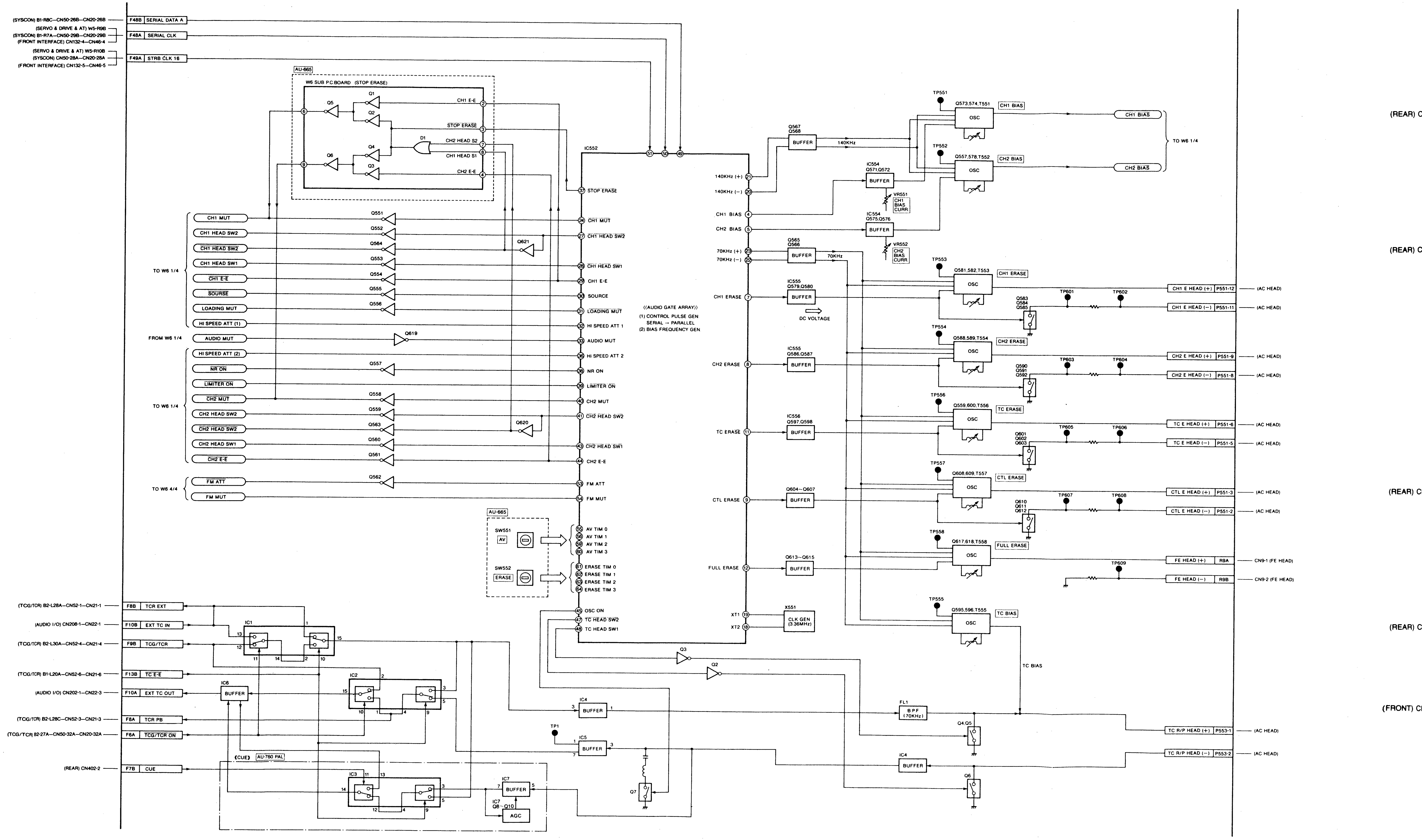
(SYSCON) B1-R8C—CN50-26B—CN20-26B
F48B SERIAL DATA A
(SERVO & DRIVE & AT) W5-R9B
(SYSCON) B1-R7A—CN50-29B—CN20-29B
(FRONT INTERFACE) CN132-4—CN46-4
F48A SERIAL CLK
(SERVO & DRIVE & AT) W5-R10B
(SYSCON) CN50-28A—CN20-28A
(FRONT INTERFACE) CN132-5—CN46-5
F49A STRB CLK 16
AU-665
W6 SUB P.C BOARD (STOP ERASE)
Q1
Q2
Q3
Q4
Q5
Q6
D1
CH1 E-E
STOP ERASE
CH2 HEAD S2
CH1 HEAD S1
CH2 E-E
IC552
STOP ERASE
CH1 MUT
CH1 HEAD SW2
CH1 HEAD SW1
CH1 E-E
SOURCE
LOADING MUT
HI SPEED ATT 1
AUDIO MUT
HI SPEED ATT 2
NR ON
LIMITER ON
CH2 MUT
CH2 HEAD SW2
CH2 HEAD SW1
CH2 E-E
FM ATT
FM MUT
TO W6 1/4
FROM W6 1/4
TO W6 1/4
TO W6 4/4
CH1 MUT
CH1 HEAD SW2
CH1 HEAD SW2
CH1 HEAD SW1
CH1 E-E
SOURSE
LOADING MUT
HI SPEED ATT (1)
AUDIO MUT
HI SPEED ATT (2)
NR ON
LIMITER ON
CH2 MUT
CH2 HEAD SW2
CH2 HEAD SW2
CH2 HEAD SW1
CH2 E-E
FM ATT
FM MUT
Q551
Q552
Q564
Q553
Q554
Q555
Q556
Q619
Q557
Q558
Q559
Q563
Q560
Q561
Q562
Q621
Q620
((AUDIO GATE ARRAY))
(1) CONTROL PULSE GEN
SERIAL → PARALLEL
(2) BIAS FREQUENCY GEN
AU-665
SW551
AV
SW552
ERASE
AV TIM 0
AV TIM 1
AV TIM 2
AV TIM 3
ERASE TIM 0
ERASE TIM 1
ERASE TIM 2
ERASE TIM 3
OSC ON
TC HEAD SW2
TC HEAD SW1
140KHz (+)
140KHz (−)
CH1 BIAS
CH2 BIAS
70KHz (+)
70KHz (−)
CH1 ERASE
CH2 ERASE
TC ERASE
CTL ERASE
FULL ERASE
XT1
XT2
X551
CLK GEN (3.36MHz)
Q567
Q568
BUFFER
140KHz
IC554
Q571,Q572
BUFFER
VR551
CH1 BIAS CURR
IC554
Q575,Q576
BUFFER
VR552
CH2 BIAS CURR
Q565
Q566
BUFFER
70KHz
IC555
Q579,Q580
BUFFER
DC VOLTAGE
IC555
Q586,Q587
BUFFER
IC556
Q597,Q598
BUFFER
Q604~Q607
BUFFER
Q613~Q615
BUFFER
TP551
Q573,574,T551
OSC
CH1 BIAS
TP552
Q577,578,T552
OSC
CH2 BIAS
CH1 BIAS
CH2 BIAS
TO W6 1/4
TP553
Q581,582,T553
OSC
CH1 ERASE
Q583
Q584
Q585
TP601
TP602
CH1 E HEAD (+) P551-12
CH1 E HEAD (−) P551-11
TP554
Q588,589,T554
OSC
CH2 ERASE
Q590
Q591
Q592
TP603
TP604
CH2 E HEAD (+) P551-9
CH2 E HEAD (−) P551-8
TP556
Q559,600,T556
OSC
TC ERASE
Q601
Q602
Q603
TP605
TP606
TC E HEAD (+) P551-6
TC E HEAD (−) P551-5
TP557
Q608,609,T557
OSC
CTL ERASE
Q610
Q611
Q612
TP607
TP608
CTL E HEAD (+) P551-3
CTL E HEAD (−) P551-2
TP558
Q617,618,T558
OSC
FULL ERASE
TP609
FE HEAD (+) R9A
FE HEAD (−) R9B
CN9-1 (FE HEAD)
CN9-2 (FE HEAD)
(AC HEAD)
TP555
Q595,596,T555
OSC
TC BIAS
TC BIAS
(REAR) C
(REAR) C
(REAR) C
(REAR) C
(FRONT) C
(TCG/TCR) B2-L28A—CN52-1—CN21-1
F8B TCR EXT
(AUDIO I/O) CN208-1—CN22-1
F10B EXT TC IN
(TCG/TCR) B2-L30A—CN52-4—CN21-4
F9B TCG/TCR
(TCG/TCR) B1-L20A—CN52-6—CN21-6
F13B TC E-E
(AUDIO I/O) CN202-1—CN22-3
F10A EXT TC OUT
(TCG/TCR) B2-L28C—CN52-3—CN21-3
F8A TCR PB
(TCG/TCR) B2-27A—CN50-32A—CN20-32A
F6A TCG/TCR ON
(REAR) CN402-2
F7B CUE
IC1
IC2
IC6
BUFFER
(CUE) AU-760 PAL
IC3
IC7
BUFFER
IC7
Q8~Q10
AGC
Q3
Q2
IC4
BUFFER
TP1
IC5
BUFFER
Q7
FL1
B.P.F (70KHz)
Q4,Q5
IC4
BUFFER
Q6
TC R/P HEAD (+) P553-1
TC R/P HEAD (−) P553-2
(AC HEAD)

REVERSE SIDE AUDIO BLOCK DIAGRAM

W6 (AUDIO) BLOCK DIAGRAM 3/4 (EXT NR SECTION)[FOR AU-760]

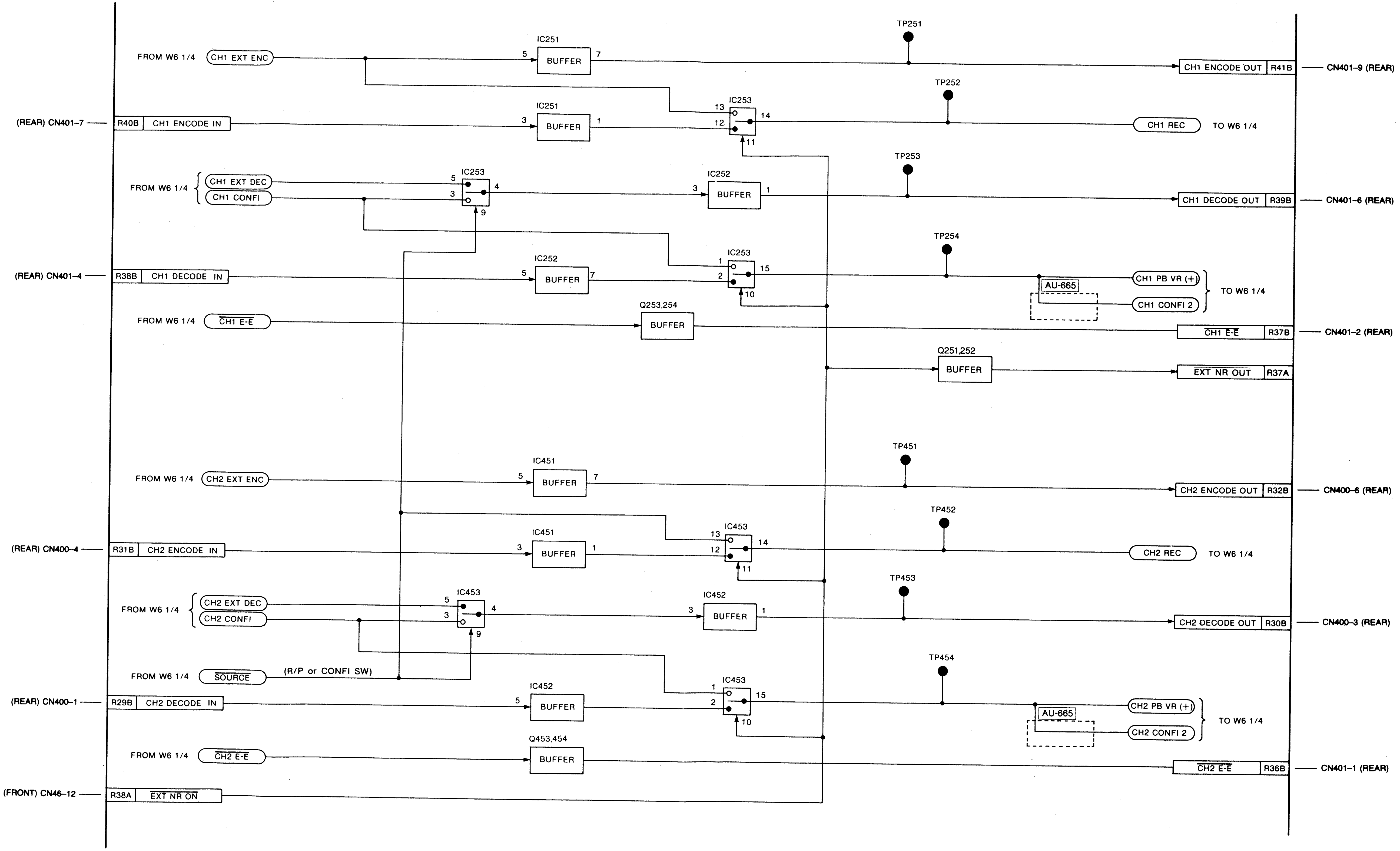
FROM W6 1/4
CH1 EXT ENC
IC251
BUFFER
5
7
TP251
CH1 ENCODE OUT
R41B
CN401-9 (REAR)
(REAR) CN401-7
R40B
CH1 ENCODE IN
IC251
BUFFER
3
1
IC253
13
12
14
11
TP252
CH1 REC
TO W6 1/4
FROM W6 1/4
CH1 EXT DEC
CH1 CONFI
IC253
5
3
4
9
IC252
BUFFER
3
1
TP253
CH1 DECODE OUT
R39B
CN401-6 (REAR)
(REAR) CN401-4
R38B
CH1 DECODE IN
IC252
BUFFER
5
7
IC253
1
2
15
10
TP254
AU-665
CH1 PB VR (+)
CH1 CONFI 2
TO W6 1/4
FROM W6 1/4
CH1 E-E
Q253,254
BUFFER
CH1 E-E
R37B
CN401-2 (REAR)
Q251,252
BUFFER
EXT NR OUT
R37A
FROM W6 1/4
CH2 EXT ENC
IC451
BUFFER
5
7
TP451
CH2 ENCODE OUT
R32B
CN400-6 (REAR)
(REAR) CN400-4
R31B
CH2 ENCODE IN
IC451
BUFFER
3
1
IC453
13
12
14
11
TP452
CH2 REC
TO W6 1/4
FROM W6 1/4
CH2 EXT DEC
CH2 CONFI
IC453
5
3
4
9
IC452
BUFFER
3
1
TP453
CH2 DECODE OUT
R30B
CN400-3 (REAR)
FROM W6 1/4
SOURCE
(R/P or CONFI SW)
TP454
(REAR) CN400-1
R29B
CH2 DECODE IN
IC452
BUFFER
5
IC453
1
2
15
10
AU-665
CH2 PB VR (+)
CH2 CONFI 2
TO W6 1/4
FROM W6 1/4
CH2 E-E
Q453,454
BUFFER
CH2 E-E
R36B
CN401-1 (REAR)
(FRONT) CN46-12
R38A
EXT NR ON

W6 (AUDIO) BLOCK DIAGRAM 4/4 (FM AUDIO SECTION)

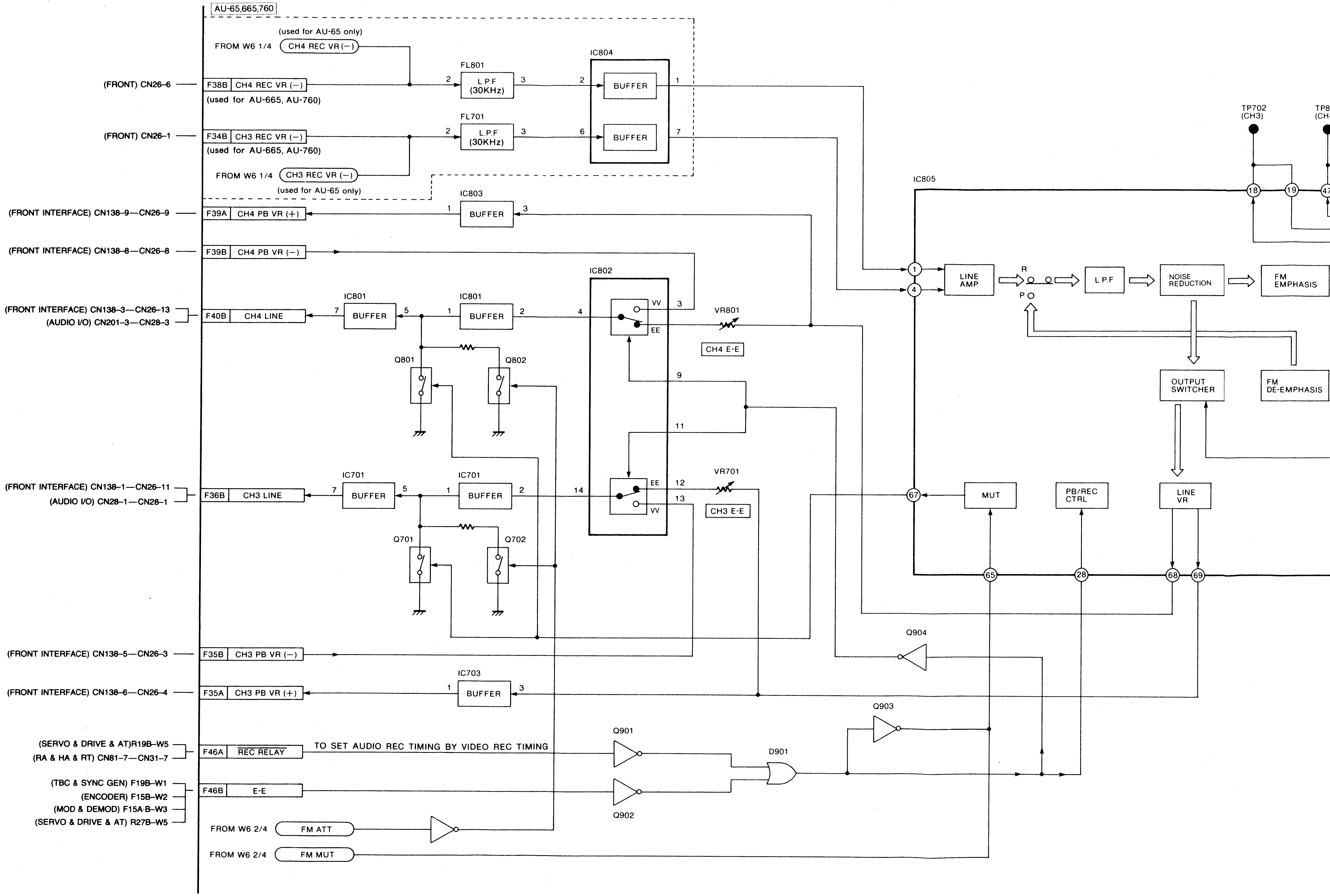

AU-65,665,760
(used for AU-65 only)
FROM W6 1/4
CH4 REC VR (−)
(FRONT) CN26-6
F38B
CH4 REC VR (−)
(used for AU-665, AU-760)
FL801
L.P.F (30KHz)
IC804
BUFFER
(FRONT) CN26-1
F34B
CH3 REC VR (−)
(used for AU-665, AU-760)
FL701
L.P.F (30KHz)
BUFFER
FROM W6 1/4
CH3 REC VR (−)
(used for AU-65 only)
IC803
BUFFER
(FRONT INTERFACE) CN138-9—CN26-9
F39A
CH4 PB VR (+)
(FRONT INTERFACE) CN138-8—CN26-8
F39B
CH4 PB VR (−)
IC802
(FRONT INTERFACE) CN138-3—CN26-13
(AUDIO I/O) CN201-3—CN28-3
F40B
CH4 LINE
IC801
BUFFER
IC801
BUFFER
VV
EE
VR801
CH4 E-E
Q801
Q802
(FRONT INTERFACE) CN138-1—CN26-11
(AUDIO I/O) CN28-1—CN28-1
F36B
CH3 LINE
IC701
BUFFER
IC701
BUFFER
EE
VV
VR701
CH3 E-E
Q701
Q702
(FRONT INTERFACE) CN138-5—CN26-3
F35B
CH3 PB VR (−)
(FRONT INTERFACE) CN138-6—CN26-4
F35A
CH3 PB VR (+)
IC703
BUFFER
(SERVO & DRIVE & AT)R19B-W5
(RA & HA & RT) CN81-7—CN31-7
F46A
REC RELAY
TO SET AUDIO REC TIMING BY VIDEO REC TIMING
Q901
D901
Q903
Q904
(TBC & SYNC GEN) F19B-W1
(ENCODER) F15B-W2
(MOD & DEMOD) F15A·B-W3
(SERVO & DRIVE & AT) R27B-W5
F46B
E-E
Q902
FROM W6 2/4
FM ATT
FROM W6 2/4
FM MUT
IC805
TP702 (CH3)
TP8 (CH
LINE AMP
R
P
L.P.F
NOISE REDUCTION
FM EMPHASIS
OUTPUT SWITCHER
FM DE-EMPHASIS
MUT
PB/REC CTRL
LINE VR

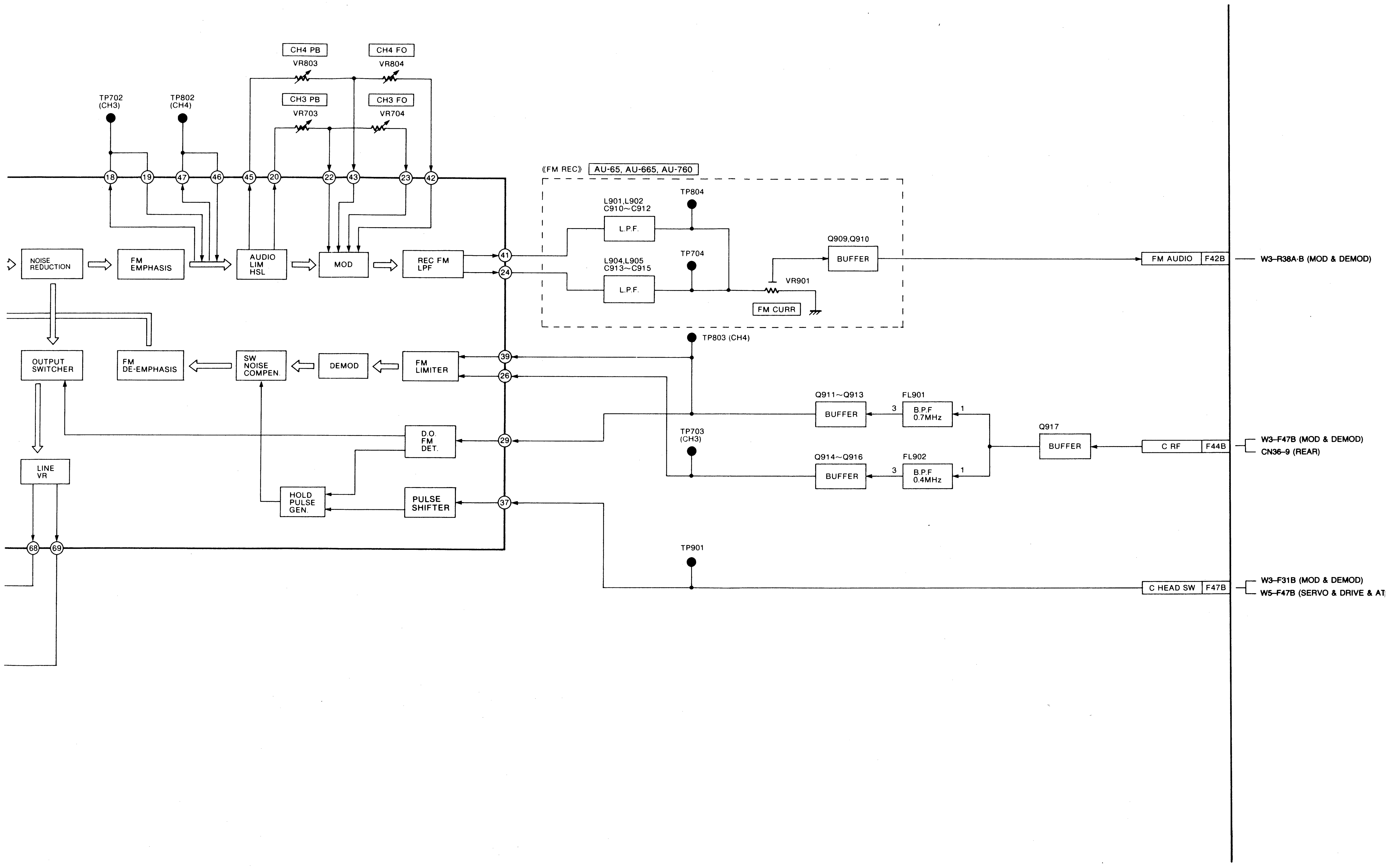

CH4 PB
VR803
CH4 FO
VR804
TP702
(CH3)
TP802
(CH4)
CH3 PB
VR703
CH3 FO
VR704
18
19
47
46
45
20
22
43
23
42
《FM REC》
AU-65, AU-665, AU-760
TP804
L901,L902
C910~C912
L.P.F.
Q909,Q910
BUFFER
TP704
L904,L905
C913~C915
L.P.F.
VR901
FM CURR
NOISE
REDUCTION
FM
EMPHASIS
AUDIO
LIM
HSL
MOD
REC FM
LPF
41
24
FM AUDIO
F42B
W3-R38A·B (MOD & DEMOD)
TP803 (CH4)
OUTPUT
SWITCHER
FM
DE-EMPHASIS
SW
NOISE
COMPEN.
DEMOD
FM
LIMITER
39
26
Q911~Q913
BUFFER
3
FL901
B.P.F
0.7MHz
1
Q917
BUFFER
C RF
F44B
W3-F47B (MOD & DEMOD)
CN36-9 (REAR)
D.O.
FM
DET.
29
TP703
(CH3)
Q914~Q916
BUFFER
3
FL902
B.P.F
0.4MHz
1
LINE
VR
HOLD
PULSE
GEN.
PULSE
SHIFTER
37
68
69
TP901
C HEAD SW
F47B
W3-F31B (MOD & DEMOD)
W5-F47B (SERVO & DRIVE & AT

B1 (SYSTEM CONTROL) BLOCK D

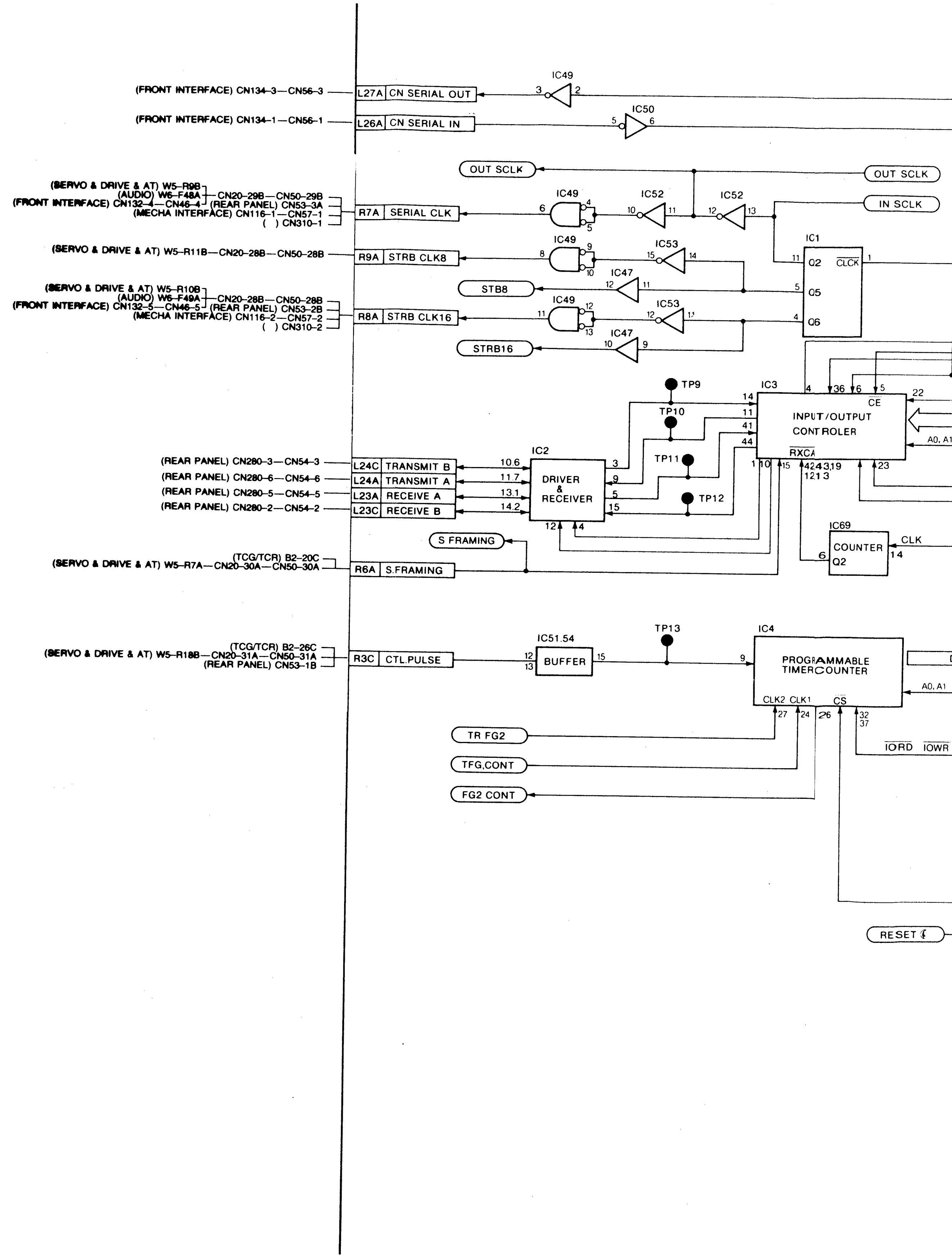
(FRONT INTERFACE) CN134-3—CN56-3
L27A CN SERIAL OUT
(FRONT INTERFACE) CN134-1—CN56-1
L26A CN SERIAL IN
IC49
IC50
OUT SCLK
IN SCLK
(SERVO & DRIVE & AT) W5-R9B
(AUDIO) W6-F48A
CN20-29B—CN50-29B
(FRONT INTERFACE) CN132-4—CN46-4
(REAR PANEL) CN53-3A
(MECHA INTERFACE) CN116-1—CN57-1
( ) CN310-1
R7A SERIAL CLK
(SERVO & DRIVE & AT) W5-R11B—CN20-28B—CN50-28B
R9A STRB CLK8
STB8
(SERVO & DRIVE & AT) W5-R10B
(AUDIO) W6-F49A
CN20-28B—CN50-28B
(FRONT INTERFACE) CN132-5—CN46-5
(REAR PANEL) CN53-2B
(MECHA INTERFACE) CN116-2—CN57-2
( ) CN310-2
R8A STRB CLK16
STRB16
IC52
IC53
IC47
IC1
Q2
CLCK
Q5
Q6
TP9
TP10
TP11
TP12
IC3
INPUT/OUTPUT CONTROLER
CE
RXCA
A0, A1
IC2
DRIVER & RECEIVER
(REAR PANEL) CN280-3—CN54-3
L24C TRANSMIT B
(REAR PANEL) CN280-6—CN54-6
L24A TRANSMIT A
(REAR PANEL) CN280-5—CN54-5
L23A RECEIVE A
(REAR PANEL) CN280-2—CN54-2
L23C RECEIVE B
S FRAMING
(TCG/TCR) B2-20C
(SERVO & DRIVE & AT) W5-R7A—CN20-30A—CN50-30A
R6A S.FRAMING
IC69
COUNTER
Q2
CLK
(TCG/TCR) B2-26C
(SERVO & DRIVE & AT) W5-R18B—CN20-31A—CN50-31A
(REAR PANEL) CN53-1B
R3C CTL.PULSE
IC51.54
BUFFER
TP13
IC4
PROGRAMMABLE TIMERCOUNTER
CLK2 CLK1 CS
A0, A1
IORD IOWR
TR FG2
TFG.CONT
FG2 CONT
RESET

REVERSE SIDE **AUDIO BLOCK DIAGRAM**

L) BLOCK DIAGRAM 1/3 (CPU SECTION)

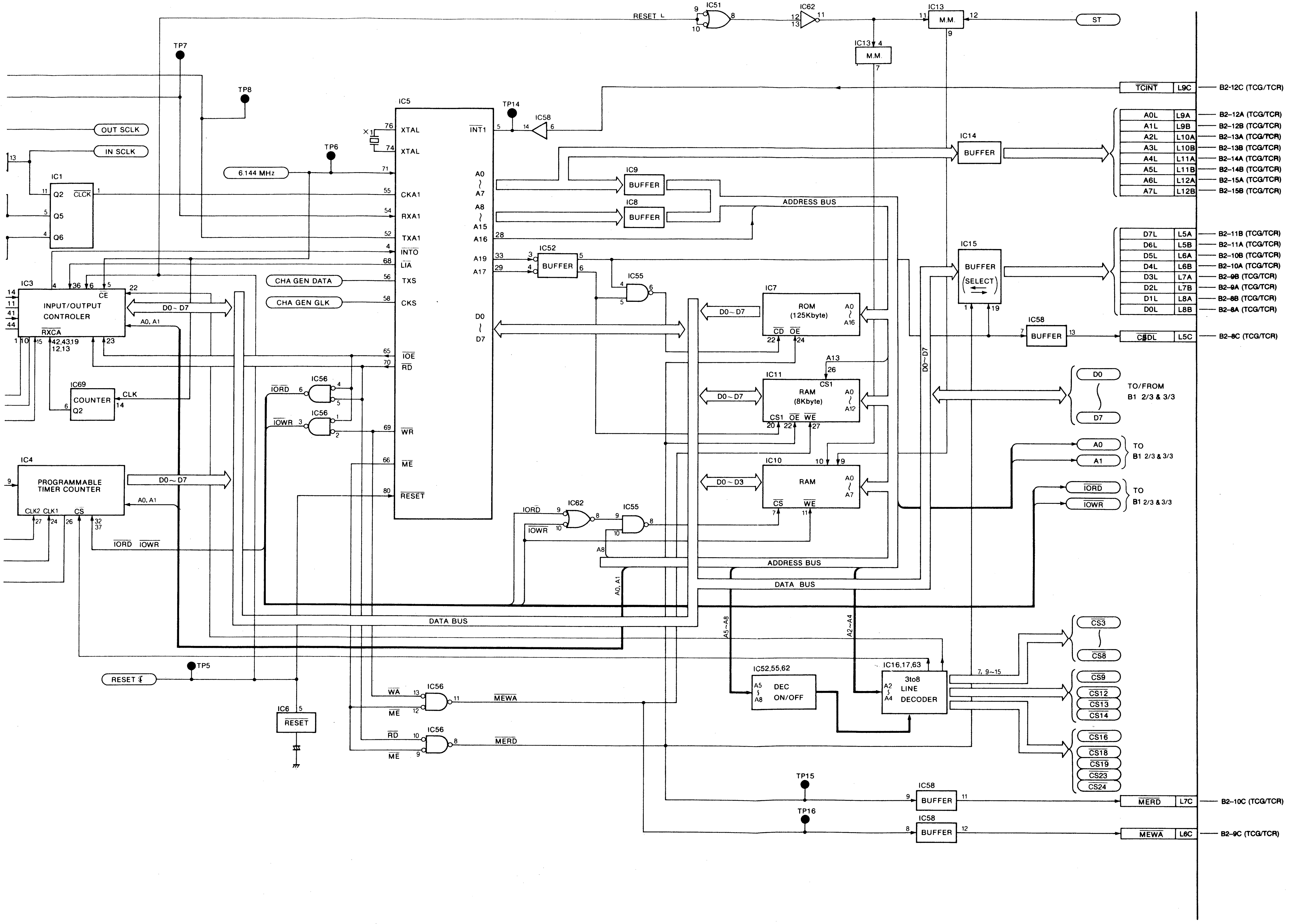

RESET L
IC51
IC62
IC13
M.M.
ST
TP7
TP8
TP6
TP14
TP5
TP15
TP16
IC13
M.M.
TCINT
L9C
B2-12C (TCG/TCR)
IC5
XTAL
XTAL
CKA1
RXA1
TXA1
INT0
LIA
TXS
CKS
IOE
RD
WR
ME
RESET
INT1
A0 ~ A7
A8 ~ A15
A16
A19
A17
D0 ~ D7
IC58
OUT SCLK
IN SCLK
6.144 MHz
IC1
Q2
CLCK
Q5
Q6
CHA GEN DATA
CHA GEN GLK
IC3
INPUT/OUTPUT CONTROLER
CE
RXCA
D0 ~ D7
A0, A1
IC69
COUNTER
Q2
CLK
IC4
PROGRAMMABLE TIMER COUNTER
CLK2 CLK1 CS
IORD
IOWR
IC56
IC9
BUFFER
IC8
BUFFER
IC52
BUFFER
IC55
ADDRESS BUS
IC7
ROM (125Kbyte)
A0 ~ A16
CD OE
IC11
RAM (8Kbyte)
A0 ~ A12
CS1 OE WE
A13
CS1
IC10
RAM
A0 ~ A7
CS WE
D0 ~ D7
D0 ~ D3
IC14
BUFFER
IC15
BUFFER
(SELECT)
IC58
BUFFER
CSDL
L5C
B2-8C (TCG/TCR)
A0L L9A B2-12A (TCG/TCR)
A1L L9B B2-12B (TCG/TCR)
A2L L10A B2-13A (TCG/TCR)
A3L L10B B2-13B (TCG/TCR)
A4L L11A B2-14A (TCG/TCR)
A5L L11B B2-14B (TCG/TCR)
A6L L12A B2-15A (TCG/TCR)
A7L L12B B2-15B (TCG/TCR)
D7L L5A B2-11B (TCG/TCR)
D6L L5B B2-11A (TCG/TCR)
D5L L6A B2-10B (TCG/TCR)
D4L L6B B2-10A (TCG/TCR)
D3L L7A B2-9B (TCG/TCR)
D2L L7B B2-9A (TCG/TCR)
D1L L8A B2-8B (TCG/TCR)
D0L L8B B2-8A (TCG/TCR)
D0 ~ D7
TO/FROM B1 2/3 & 3/3
A0
A1
TO B1 2/3 & 3/3
IORD
IOWR
TO B1 2/3 & 3/3
IC62
IC55
A8
A0, A1
ADDRESS BUS
DATA BUS
D0 ~ D7
DATA BUS
A5~A8
A2~A4
IC52,55,62
A5 ~ A8
DEC ON/OFF
IC16,17,63
A2 ~ A4
3to8 LINE DECODER
7, 9~15
CS3 ~ CS8
CS9
CS12
CS13
CS14
CS16
CS18
CS19
CS23
CS24
RESET L
IC6
RESET
WA
ME
IC56
MEWA
RD
ME
IC56
MERD
IC58
BUFFER
MERD
L7C
B2-10C (TCG/TCR)
IC58
BUFFER
MEWA
L6C
B2-9C (TCG/TCR)

B1 (SYSTEM CONTROL) BLOCK DIAGRAM 2/3 (I/O SECTION)

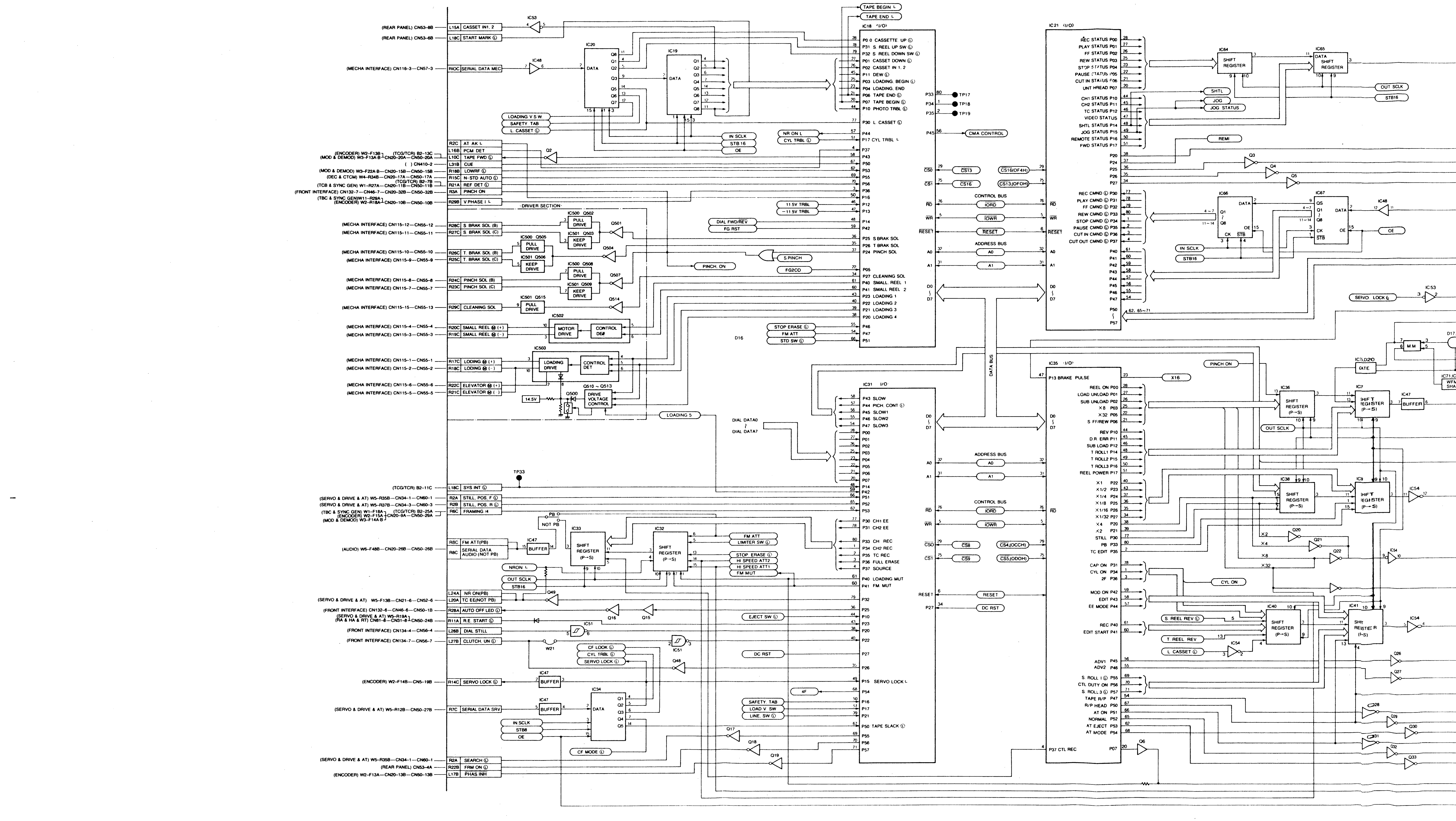
(REAR PANEL) CN53-8B
(REAR PANEL) CN53-6B
(MECHA INTERFACE) CN116-3—CN57-3
(ENCODER) W2-F13B
(TCG/TCR) B2-13C
(MOD & DEMOD) W3-F13A·B—CN20-20A—CN50-20A
( ) CN410-2
(MOD & DEMOD) W3-F22A·B—CN20-15B—CN50-15B
(DEC & CTCM) W4-R34B—CN20-17A—CN50-17A
(TCG/TCR) B2-7B
(TCB & SYNC GEN) W1-R27A—CN20-11B—CN50-11B
(FRONT INTERFACE) CN132-7—CN46-7—CN20-32B—CN50-32B
(TBC & SYNC GEN)W11-R29A
(ENCODER) W2-R18A—CN20-10B—CN50-10B
(MECHA INTERFACE) CN115-12—CN55-12
(MECHA INTERFACE) CN115-11—CN55-11
(MECHA INTERFACE) CN115-10—CN55-10
(MECHA INTERFACE) CN115-9—CN55-9
(MECHA INTERFACE) CN115-8—CN55-8
(MECHA INTERFACE) CN115-7—CN55-7
(MECHA INTERFACE) CN115-15—CN55-13
(MECHA INTERFACE) CN115-4—CN55-4
(MECHA INTERFACE) CN115-3—CN55-3
(MECHA INTERFACE) CN115-1—CN55-1
(MECHA INTERFACE) CN115-2—CN55-2
(MECHA INTERFACE) CN115-6—CN55-6
(MECHA INTERFACE) CN115-5—CN55-5
(TCG/TCR) B2-11C
(SERVO & DRIVE & AT) W5-R35B—CN34-1—CN60-1
(SERVO & DRIVE & AT) W5-R37B—CN34-3—CN60-3
(TBC & SYNC GEN) W1-F18A
(TCG/TCR) B2-25A
(ENCODER) W2-F15A—CN20-9A—CN50-29A
(MOD & DEMOD) W3-F14A·B
(AUDIO) W6-F48B—CN20-26B—CN50-26B
(SERVO & DRIVE & AT) W5-F13B—CN21-6—CN52-6
(FRONT INTERFACE) CN132-6—CN46-6—CN50-1B
(SERVO & DRIVE & AT) W5-R19A
(RA & HA & RT) CN81-8—CN31-8—CN50-24B
(FRONT INTERFACE) CN134-4—CN56-4
(FRONT INTERFACE) CN134-7—CN56-7
(ENCODER) W2-F14B—CN5-19B
(SERVO & DRIVE & AT) W5-R12B—CN50-27B
(SERVO & DRIVE & AT) W5-R35B—CN34-1—CN60-1
(REAR PANEL) CN53-4A
(ENCODER) W2-F13A—CN20-13B—CN50-13B
L15A CASSET IN1, 2
L18C START MARK Ⓛ
RIOC SERIAL DATA MEC
R2C AT AK L
L16B PCM DET
L10C TAPE FWD Ⓛ
L31B CUE
R18B LOWRF Ⓛ
R15C N-STD AUTO Ⓛ
R21A REF DET Ⓛ
R3A PINCH ON
R29B V.PHASE I L
R28C S. BRAK SOL (B)
R27C S. BRAK SOL (C)
R26C T. BRAK SOL (B)
R25C T. BRAK SOL (C)
R24C PINCH SOL (B)
R23C PINCH SOL (C)
R29C CLEANING SOL
R20C SMALL REEL Ⓜ (+)
R19C SMALL REEL Ⓜ (-)
R17C LODING Ⓜ (+)
R18C LODING Ⓜ (-)
R22C ELEVATOR Ⓜ (+)
R21C ELEVATOR Ⓜ (-)
L18C SYS INT Ⓛ
R2A STILL, POS. F Ⓛ
R2B STILL, POS. R Ⓛ
R6C FRAMING /4
R8C FM ATT(PB)
R8C SERIAL DATA AUDIO (NOT PB)
L24A NR ON(PB)
L20A TC EE(NOT PB)
R28A AUTO OFF LED Ⓛ
R11A R.E. START Ⓛ
L26B DIAL STILL
L27B CLUTCH. UN Ⓛ
R14C SERVO LOCK Ⓛ
R7C SERIAL DATA SRV
R2A SEARCH Ⓛ
R22B FRM ON Ⓛ
L17B PHAS INH
IC53
IC48
IC20
DATA
Q1 Q2 Q3 Q5 Q6 Q7 Q8
IC19
DATA
Q1 Q2 Q3 Q4 Q5 Q6 Q7 Q8
LOADING V.S.W.
SAFETY. TAB
L. CASSET Ⓛ
IN SCLK
STB 16
OE
Q2
DRIVER SECTION
IC500 Q502
PULL DRIVE
IC501 Q503
KEEP DRIVE
Q501
IC500 Q505
PULL DRIVE
IC501 Q506
KEEP DRIVE
Q504
IC500 Q508
PULL DRIVE
IC501 Q509
KEEP DRIVE
Q507
IC501 Q515
PULL DRIVE
Q514
IC502
MOTOR DRIVE
CONTROL DET
IC503
LOADING DRIVE
CONTROL DET
Q510 ~ Q513
DRIVE VOLTAGE CONTROL
Q500
14.5V
LOADING 5
NR ON L
CYL TRBL Ⓛ
11.5V TRBL
−11.5V TRBL
DIAL FWD/REV
FG RST
PINCH. ON
S.PINCH
FG2CO
STOP ERASE Ⓛ
FM ATT
STD SW Ⓛ
D16
DIAL DATA0 ~ DIAL DATA7
TAPE BEGIN L
TAPE END L
IC18 (I/O)
P0 0 CASSETTE UP Ⓛ
P31 S. REEL UP SW Ⓛ
P32 S. REEL DOWN SW Ⓛ
P01 CASSET DOWN Ⓛ
P02 CASSET IN 1, 2
P11 DEW Ⓛ
P03 LOADING. BEGIN Ⓛ
P04 LOADING. END
P06 TAPE END Ⓛ
P07 TAPE BEGIN Ⓛ
P10 PHOTO TRBL Ⓛ
P30 L. CASSET Ⓛ
P44
P17 CYL TRBL L
P37 P43 P50 P53 P55 P56 P36 P16 P12 P13 P14 P42
P25 S.BRAK SOL
P26 T.BRAK SOL
P24 PINCH SOL
P05
P27 CLEANING SOL
P40 SMALL. REEL 1
P41 SMALL REEL 2
P23 LOADING 1
P22 LOADING 2
P21 LOADING 3
P20 LOADING 4
P46 P47 P51
P33 TP17
P34 TP18
P35 TP19
P45 CMA CONTROL
CS0 CS13
CS1 CS16
CONTROL BUS
RD IORD
WR IOWR
RESET
ADDRESS BUS
A0
A1
D0 ~ D7
DATA BUS
CS16(OF4H)
CS13,(OFOH)
IC21 (I/O)
REC STATUS P00
PLAY STATUS P01
FF STATUS P02
REW STATUS P03
STOP STATUS P04
PAUSE STATUS P05
CUT IN STATUS P06
UNT HREAD P07
CH1 STATUS P10
CH2 STATUS P11
TC STATUS P12
VIDEO STATUS
SHTL STATUS P14
JOG STATUS P15
REMOTE STATUS P16
FWD STATUS P17
P20 P24 P25 P26 P27
REC CMND Ⓛ P30
PLAY CMND Ⓛ P31
FF CMND Ⓛ P32
REW CMND Ⓛ P33
STOP CMND Ⓛ P34
PAUSE CMND Ⓛ P35
CUT IN CMND Ⓛ P36
CUT OUT CMND Ⓛ P37
P40 P41 P42 P43 P44 P45 P46 P47
P50 ~ P57
62, 65~71
IC64
SHIFT REGISTER
IC65
DATA SHIFT REGISTER
OUT SCLK
STB16
SHTL
JOG
JOG STATUS
REMI
Q3
Q4
Q5
IC66
DATA
Q1 ~ Q8
CK STB OE
IC67
QS
Q1 ~ Q8
DATA
CK STB OE
IC48
IN SCLK
STB16
OE
IC53
SERVO. LOCK Ⓛ
D17
M.M
IC75,D20
GATE
IC71,IC
WFM SHA
TP33
PB
NOT PB
IC47
BUFFER
IC33
SHIFT REGISTER (P→S)
IC32
SHIFT REGISTER (P→S)
NRON L
OUT SCLK
STB16
FM ATT
LIMITER SW Ⓛ
STOP. ERASE Ⓛ
HI SPEED ATT2
HI SPEED ATT1
FM MUT
Q49
Q16
Q15
IC51
W21
CF LOOK Ⓛ
CYL TRBL Ⓛ
SERVO LOCK Ⓛ
Q48
IC47
BUFFER
IC47
BUFFER
IC34
DATA
Q1 Q2 Q3 Q4 Q5
IN.SCLK
STB8
OE
CF MODE Ⓛ
Q17
Q18
Q19
EJECT SW Ⓛ
DC RST
4F
SAFETY. TAB
LOAD V SW
LINE. SW Ⓛ
IC31 I/O
P43 SLOW
P44 PICH. CONT Ⓛ
P45 SLOW1
P46 SLOW2
P47 SLOW3
P00 P01 P02 P03 P04 P05 P06 P07
P14 P42 P51 P52 P53
P30 CH1 EE
P31 CH2 EE
P33 CH REC
P34 CH2 REC
P35 TC REC
P36 FULL ERASE
P37 SOURCE
P40 LOADING MUT
P41 FM MUT
P32 P25 P10 P23 P20 P22 P27 P26
P15 SERVO LOCK L
P54 P16 P17 P21
P50 TAPE SLACK Ⓛ
P55 P56 P57
CS0 CS8
CS1 CS9
RESET
P27 DC RST
CS4,(OCCH)
CS5,(ODOH)
IC35 (I/O)
P13 BRAKE PULSE
X16
REEL ON P00
LOAD UNLOAD P01
SUB UNLOAD P02
×8 P03
×32 P05
S FF/REW P06
REV P10
D.R. ERR P11
SUB LOAD P12
T ROLL1 P14
T ROLL2 P15
T ROLL3 P16
REEL POWER P17
×1 P22
×1/2 P23
×1/4 P24
×1/8 P25
×1/16 P26
×1/32 P27
×4 P20
×2 P21
STILL P30
PB P33
TC EDIT P35
CAP ON P31
CYL ON P34
2F P36
MOD ON P42
EDIT P43
EE MODE P44
REC P40
EDIT START P41
ADV1 P45
ADV2 P46
S. ROLL 1 Ⓛ P55
CTL DUTY ON P56
S. ROLL 3 Ⓛ P57
TAPE R/P P47
R/P HEAD P50
AT ON P51
NORMAL P52
AT EJECT P53
AT MODE P54
P37 CTL REC
P07
Q6
PINCH ON
IC36
SHIFT REGISTER (P→S)
IC37
SHIFT REGISTER (P→S)
IC47
BUFFER
IC38
SHIFT REGISTER (P→S)
IC39
SHIFT REGISTER (P→S)
IC54
×2
×4
×8
×32
Q20
Q21
Q22
CYL ON
IC40
SHIFT REGISTER (P→S)
IC41
SHIFT REGISTER (P→S)
S. REEL REV Ⓛ
T. REEL REV
L. CASSET Ⓛ
Q26
Q27
Q28
Q29
Q30
Q31
Q32
Q33

M CONTROL) BLOCK DIAGRAM 2/3 (I/O SECTION)

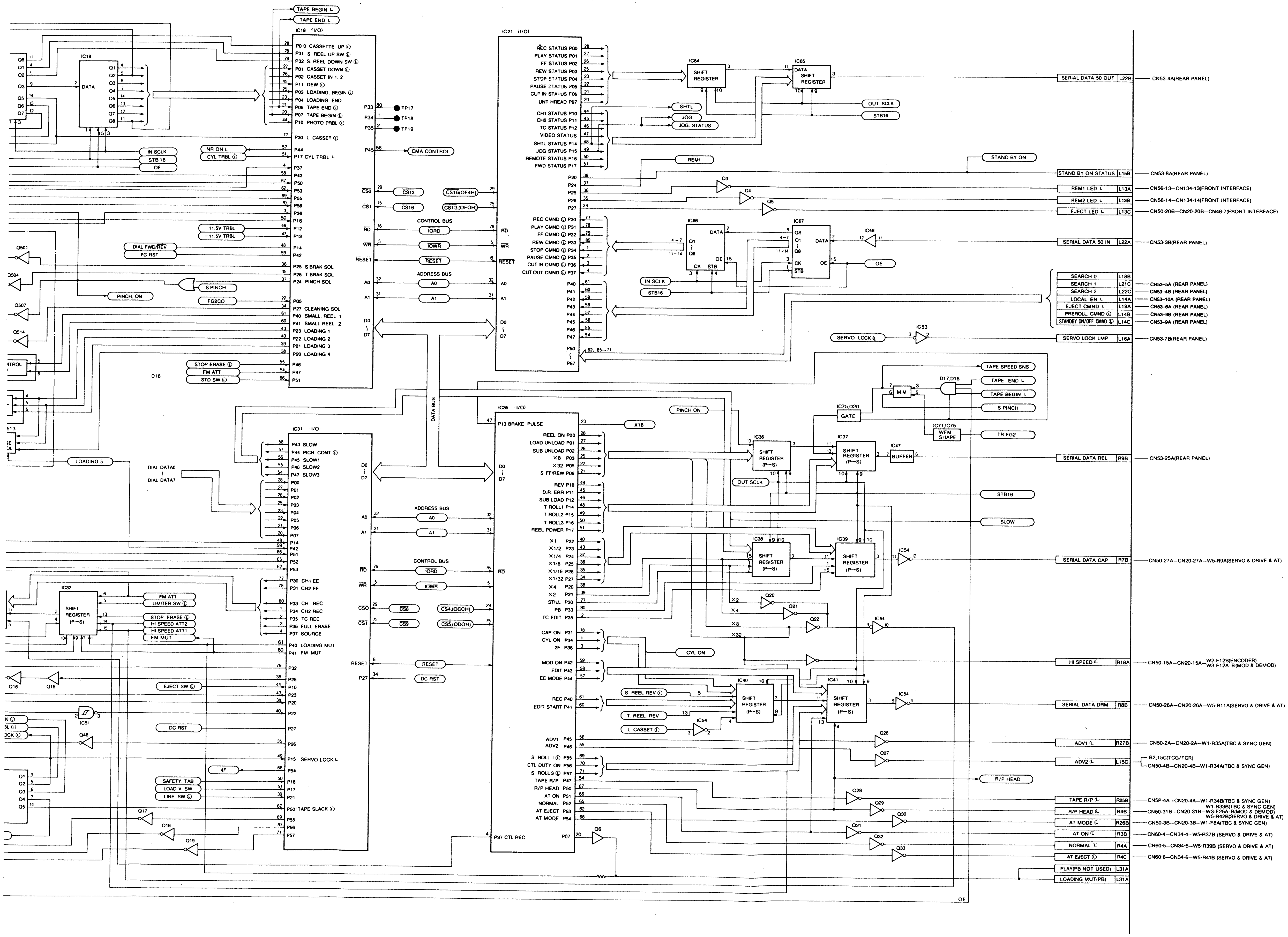
TAPE BEGIN L
TAPE END L
IC18 (I/O)
P0 0 CASSETTE UP
P31 S REEL UP SW
P32 S REEL DOWN SW
P01 CASSET DOWN
P02 CASSET IN 1, 2
P11 DEW
P03 LOADING BEGIN
P04 LOADING END
P06 TAPE END
P07 TAPE BEGIN
P10 PHOTO TRBL
P30 L CASSET
P44
P17 CYL TRBL L
P25 S BRAK SOL
P26 T BRAK SOL
P24 PINCH SOL
P27 CLEANING SOL
P40 SMALL REEL 1
P41 SMALL REEL 2
P23 LOADING 1
P22 LOADING 2
P21 LOADING 3
P20 LOADING 4
P46
P47
P51
TP17
TP18
TP19
CMA CONTROL
IC19
DATA
IN SCLK
STB 16
OE
NR ON L
CYL TRBL
11.5V TRBL
−11.5V TRBL
DIAL FWD/REV
FG RST
S PINCH
PINCH ON
FG2CO
STOP ERASE
FM ATT
STD SW
Q501
Q504
Q507
Q514
D16
CS13
CS16
CS16(OF4H)
CS13(OFOH)
CONTROL BUS
IORD
IOWR
RESET
ADDRESS BUS
A0
A1
D0
D7
DATA BUS
IC21 (I/O)
REC STATUS P00
PLAY STATUS P01
FF STATUS P02
REW STATUS P03
STOP STATUS P04
PAUSE STATUS P05
CUT IN STATUS P06
UNT HREAD P07
CH1 STATUS P10
CH2 STATUS P11
TC STATUS P12
VIDEO STATUS
SHTL STATUS P14
JOG STATUS P15
REMOTE STATUS P16
FWD STATUS P17
REC CMND P30
PLAY CMND P31
FF CMND P32
REW CMND P33
STOP CMND P34
PAUSE CMND P35
CUT IN CMND P36
CUT OUT CMND P37
SHTL
JOG
JOG STATUS
REMI
IC64
SHIFT REGISTER
IC65
DATA SHIFT REGISTER
OUT SCLK
STB16
STAND BY ON
Q3
Q4
Q5
IC66
IC67
IC48
OE
IN SCLK
STB16
SERVO LOCK
IC53
SERIAL DATA 50 OUT L22B — CN53-4A(REAR PANEL)
STAND BY ON STATUS L15B — CN53-8A(REAR PANEL)
REM1 LED L L13A — CN56-13—CN134-13(FRONT INTERFACE)
REM2 LED L L13B — CN56-14—CN134-14(FRONT INTERFACE)
EJECT LED L L13C — CN50-20B—CN20-20B—CN46-7(FRONT INTERFACE)
SERIAL DATA 50 IN L22A — CN53-3B(REAR PANEL)
SEARCH 0 L18B — CN53-5A (REAR PANEL)
SEARCH 1 L21C — CN53-4B (REAR PANEL)
SEARCH 2 L22C — CN53-10A (REAR PANEL)
LOCAL EN L L14A — CN53-6A (REAR PANEL)
EJECT CMND L L19A — CN53-9B (REAR PANEL)
PREROLL CMND L14B — CN53-9A (REAR PANEL)
STANDBY ON/OFF CMND L14C
SERVO LOCK LMP L16A — CN53-7B(REAR PANEL)
TAPE SPEED SNS
TAPE END L
TAPE BEGIN L
S PINCH
TR FG2
D17,D18
MM
IC75,D20
GATE
IC71,IC75
WFM SHAPE
PINCH ON
IC35 (I/O)
P13 BRAKE PULSE
X16
REEL ON P00
LOAD UNLOAD P01
SUB UNLOAD P02
×8 P03
×32 P05
S FF/REW P06
REV P10
D.R ERR P11
SUB LOAD P12
T ROLL1 P14
T ROLL2 P15
T ROLL3 P16
REEL POWER P17
X1 P22
X1/2 P23
X1/4 P24
X1/8 P25
X1/16 P26
X1/32 P27
X4 P20
X2 P21
STILL P30
PB P33
TC EDIT P35
CAP ON P31
CYL ON P34
2F P36
MOD ON P42
EDIT P43
EE MODE P44
REC P40
EDIT START P41
ADV1 P45
ADV2 P46
S. ROLL 1 P55
CTL DUTY ON P56
S. ROLL 3 P57
TAPE R/P P47
R/P HEAD P50
AT ON P51
NORMAL P52
AT EJECT P53
AT MODE P54
P37 CTL REC
P07
Q6
IC36
IC37
IC47
BUFFER
OUT SCLK
STB16
SLOW
IC38
IC39
IC54
SHIFT REGISTER (P→S)
×2
×4
×8
×32
Q20
Q21
Q22
CYL ON
S. REEL REV
T. REEL REV
L. CASSET
IC40
IC41
Q26
Q27
Q28
Q29
Q30
Q31
Q32
Q33
R/P HEAD
SERIAL DATA REL R9B — CN53-25A(REAR PANEL)
SERIAL DATA CAP R7B — CN50-27A—CN20-27A—W5-R9A(SERVO & DRIVE & AT)
HI SPEED L R18A — CN50-15A—CN20-15A—W2-F12B(ENCODER) W3-F12A-B(MOD & DEMOD)
SERIAL DATA DRM R8B — CN50-26A—CN20-26A—W5-R11A(SERVO & DRIVE & AT)
ADV1 L R27B — CN50-2A—CN20-2A—W1-R35A(TBC & SYNC GEN)
ADV2 L L15C — B2,15C(TCG/TCR) CN50-4B—CN20-4B—W1-R34A(TBC & SYNC GEN)
TAPE R/P L R25B — CN5P-4A—CN20-4A—W1-R34B(TBC & SYNC GEN)
R/P HEAD L R4B — CN50-31B—CN20-31B—W3-F25A-B(MOD & DEMOD) W1-R33B(TBC & SYNC GEN) W5-R42B(SERVO & DRIVE & AT)
AT MODE L R26B — CN50-3B—CN20-3B—W1-F8A(TBC & SYNC GEN)
AT ON L R3B — CN60-4—CN34-4—W5-R37B (SERVO & DRIVE & AT)
NORMAL L R4A — CN60-5—CN34-5—W5-R39B (SERVO & DRIVE & AT)
AT EJECT R4C — CN60-6—CN34-6—W5-R41B (SERVO & DRIVE & AT)
PLAY(PB NOT USED) L31A
LOADING MUT(PB) L31A
OE
IC31 I/O
P43 SLOW
P44 PICH. CONT
P45 SLOW1
P46 SLOW2
P47 SLOW3
P00
P01
P02
P03
P04
P05
P06
P07
P14
P42
P51
P52
P53
P30 CH1 EE
P31 CH2 EE
P33 CH REC
P34 CH2 REC
P35 TC REC
P36 FULL ERASE
P37 SOURCE
P40 LOADING MUT
P41 FM MUT
P32
P25
P10
P23
P20
P22
P27
P26
P15 SERVO LOCK L
P54
P16
P17
P21
P50 TAPE SLACK
P55
P56
P57
DIAL DATA0 ~ DIAL DATA7
LOADING 5
CS8
CS9
CS4(OCCH)
CS5(ODOH)
RESET
DC RST
IC32
SHIFT REGISTER (P→S)
FM ATT
LIMITER SW
STOP ERASE
HI SPEED ATT2
HI SPEED ATT1
FM MUT
EJECT SW
IC51
DC RST
Q48
Q16
Q15
4F
SAFETY TAB
LOAD V. SW
LINE. SW
Q17
Q18
Q19
Q1
Q2
Q3
Q4
Q5
Q6
Q7
Q8
513

B1 (SYSTEM CONTROL) BLOCK DIAGRAM 3/3 (GATE ARRY & I/O SECTION)

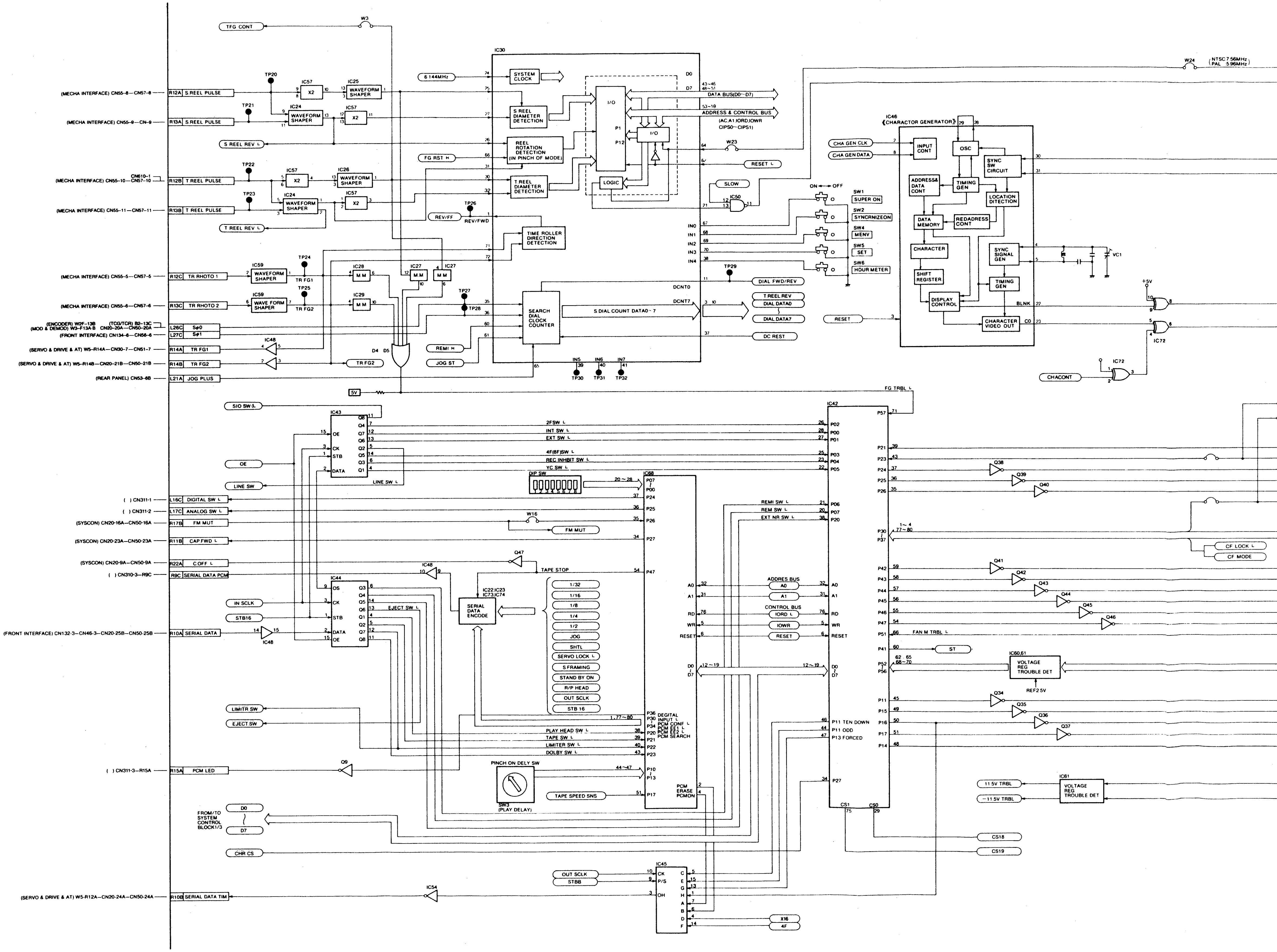

TFG CONT
W3
IC30
6.144MHz
SYSTEM CLOCK
S REEL DIAMETER DETECTION
REEL ROTATION DETECTION (IN PINCH OF MODE)
T REEL DIAMETER DETECTION
TIME ROLLER DIRECTION DETECTION
SEARCH DIAL CLOCK COUNTER
S DIAL COUNT DATA0~7
I/O
LOGIC
DATA BUS(D0~D7)
ADDRESS & CONTROL BUS (AC,A1,IORD,IOWR CIPS0~CIPS1)
W23
RESET L
SLOW
IC50
DIAL FWD/REV
T REEL REV
DIAL DATA0
DIAL DATA7
DC REST
IN5 IN6 IN7
TP30 TP31 TP32
W24
NTSC 7.56MHz
PAL 5.96MHz
IC46
CHARACTOR GENERATOR
CHA GEN CLK
CHA GEN DATA
INPUT CONT
OSC
SYNC SW CIRCUIT
ADDRESS& DATA CONT
TIMING GEN
LOCATION DITECTION
DATA MEMORY
REDADRESS CONT
CHARACTER
SYNC SIGNAL GEN
SHIFT REGISTER
DISPLAY CONTROL
CHARACTER VIDEO OUT
BLNK
VC1
IC72
CHACONT
SW1 SUPER ON
SW2 SYNCRNIZEON
SW4 MENV
SW5 SET
SW6 HOUR METER
ON OFF
RESET
(MECHA INTERFACE) CN55-8—CN57-8
(MECHA INTERFACE) CN55-9—CN-9
(MECHA INTERFACE) CN55-10—CN57-10
(MECHA INTERFACE) CN55-11—CN57-11
(MECHA INTERFACE) CN55-5—CN57-5
(MECHA INTERFACE) CN55-6—CN57-6
(SERVO & DRIVE & AT) W5-R14A—CN30-7—CN51-7
(SERVO & DRIVE & AT) W5-R14B—CN20-21B—CN50-21B
(REAR PANEL) CN53-6B
R12A S REEL PULSE
R13A S REEL PULSE
R12B T REEL PULSE
R13B T REEL PULSE
R12C TR RHOTO 1
R13C TR RHOTO 2
L26C
L27C
R14A TR FG1
R14B TR FG2
L21A JOG PLUS
IC57 X2
IC25 WAVEFORM SHAPER
IC24 WAVEFORM SHAPER
IC26 WAVEFORM SHAPER
IC59 WAVEFORM SHAPER
IC28 MM
IC29 MM
IC27 MM
IC48
D4 D5
S REEL REV L
T REEL REV L
FG RST H
REV/FF
REV/FWD
REMI H
JOG ST
TR FG2
TP20 TP21 TP22 TP23 TP24 TP25 TP26 TP27 TP28 TP29
5V
SIO SW L
IC43
OE
LINE SW
IC44
IN SCLK
STB16
( ) CN311-1
( ) CN311-2
(SYSCON) CN20-16A—CN50-16A
(SYSCON) CN20-23A—CN50-23A
(SYSCON) CN20-9A—CN50-9A
( ) CN310-3—R9C
(FRONT INTERFACE) CN132-3—CN46-3—CN20-25B—CN50-25B
( ) CN311-3—R15A
(SERVO & DRIVE & AT) W5-R12A—CN20-24A—CN50-24A
L16C DIGITAL SW L
L17C ANALOG SW L
R17B FM MUT
R11B CAP.FWD L
R22A C.OFF L
R9C SERIAL DATA PCM
R10A SERIAL DATA
R15A PCM LED
R10B SERIAL DATA TIM
2FSW L
INT SW L
EXT SW L
4F(8F)SW L
REC INHIBIT SW L
YC SW L
LINE SW L
DIP SW
W16
FM MUT
Q47
TAPE STOP
IC22 IC23 IC73 IC74
SERIAL DATA ENCODE
EJECT SW L
1/32 1/16 1/8 1/4 1/2 JOG SHTL SERVO LOCK L S.FRAMING STAND BY ON R/P HEAD OUT SCLK STB 16
IC68
DEGITAL INPUT L
PCM CONF L
PCM EE1 L
PCM EE2 L
PCM SEARCH
PLAY HEAD SW L
TAPE SW L
LIMITER SW L
DOLBY SW L
LIMITR SW
EJECT SW
Q9
PINCH ON DELY SW
SW3 (PLAY DELAY)
TAPE SPEED SNS
PCM ERASE PCMON
FROM/TO SYSTEM CONTROL BLOCK1/3
D0 D7
CHR CS
IC42
REMI SW L
REM SW L
EXT NR SW L
ADDRES BUS A0 A1
CONTROL BUS IORD L IOWR RESET
P11 TEN DOWN
P11 ODD
P13 FORCED
CS1 CS0
CS18 CS19
FG TRBL L
Q38 Q39 Q40
CF LOCK L
CF MODE
Q41 Q42 Q43 Q44 Q45 Q46
FAN M TRBL L
ST
IC60,61 VOLTAGE REG TROUBLE DET
REF2.5V
Q34 Q35 Q36 Q37
IC61 VOLTAGE REG TROUBLE DET
11.5V TRBL
−11.5V TRBL
IC45
OUT SCLK
STBB
IC54
X16
4F

CONTROL) BLOCK DIAGRAM 3/3 (GATE ARRY & I/O SECTION)

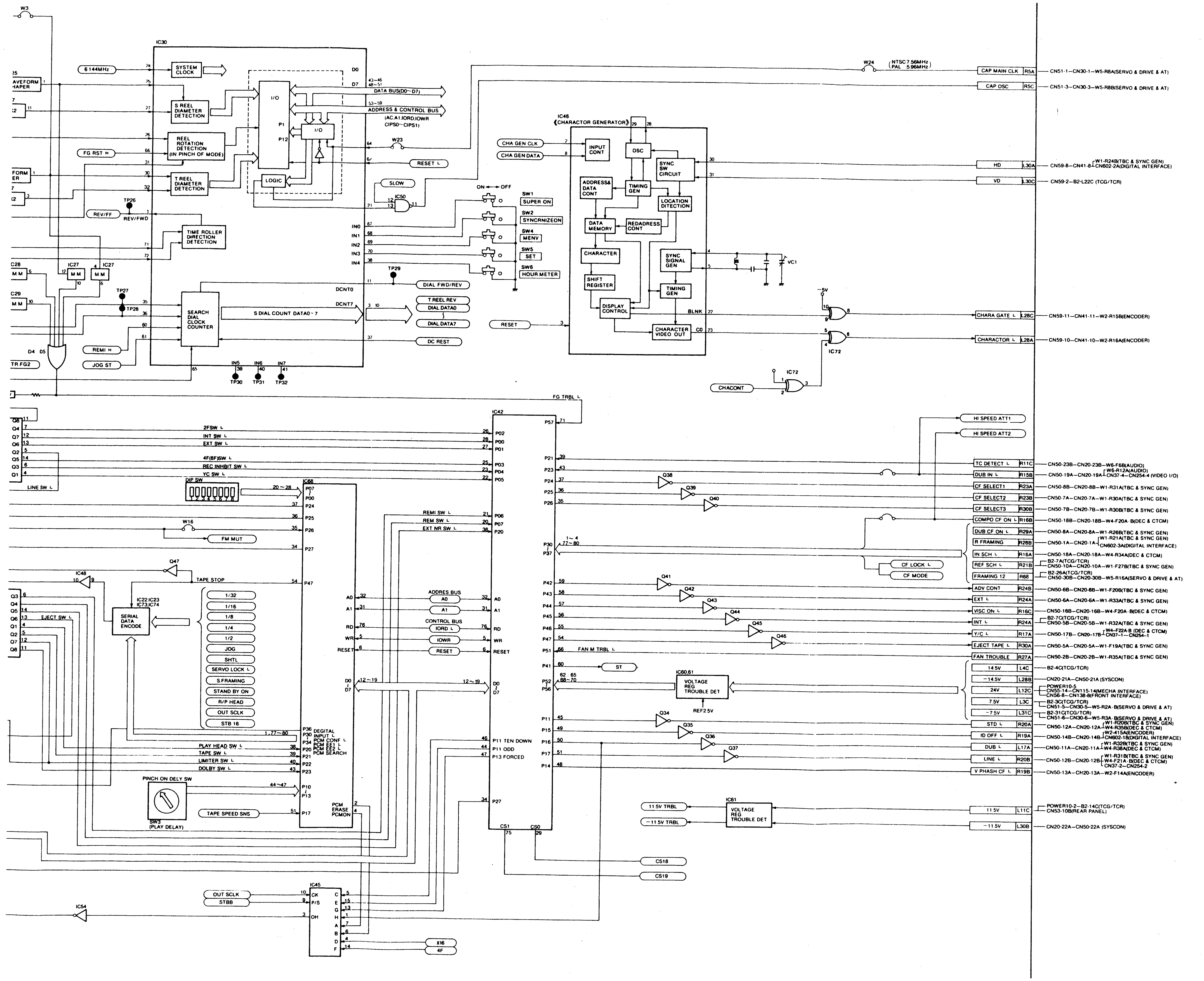

W3
IC30
6.144MHz
SYSTEM CLOCK
S.REEL DIAMETER DETECTION
REEL ROTATION DETECTION (IN PINCH OF MODE)
T.REEL DIAMETER DETECTION
FG RST H
REV/FF
REV/FWD
TP26
TIME ROLLER DIRECTION DETECTION
IC27
M.M
IC28
IC29
TP27
TP28
SEARCH DIAL CLOCK COUNTER
S DIAL COUNT DATA0~7
REMI H
JOG ST
D4 D5
TR.FG2
IN5
IN6
IN7
TP30
TP31
TP32
I/O
P1
P12
LOGIC
D0
D7
DATA BUS(D0~D7)
ADDRESS & CONTROL BUS
(AC,A1,IORD,IOWR CIPS0~CIPS1)
W23
RESET L
SLOW
IC50
IN0
IN1
IN2
IN3
IN4
DCNT0
DCNT7
TP29
DIAL FWD/REV
T.REEL REV
DIAL DATA0
DIAL DATA7
DC REST
ON ↔ OFF
SW1
SUPER ON
SW2
SYNCRNIZEON
SW4
MENV
SW5
SET
SW6
HOUR METER
IC46
(CHARACTOR GENERATOR)
CHA GEN CLK
CHA GEN DATA
INPUT CONT
OSC
SYNC SW CIRCUIT
ADDRESS& DATA CONT
TIMING GEN
LOCATION DITECTION
DATA MEMORY
REDADRESS CONT
CHARACTER
SYNC SIGNAL GEN
SHIFT REGISTER
TIMING GEN
DISPLAY CONTROL
CHARACTER VIDEO OUT
BLNK
CO
RESET
VC1
-5V
IC72
CHACONT
W24
(NTSC 7.56MHz PAL 5.96MHz)
CAP MAIN CLK
R5A
CN51-1—CN30-1—W5-R8A(SERVO & DRIVE & AT)
CAP OSC
R5C
CN51-3—CN30-3—W5-R8B(SERVO & DRIVE & AT)
HD
L30A
CN59-8—CN41-8—W1-R24B(TBC & SYNC GEN) / CN602-2A(DIGITAL INTERFACE)
VD
L30C
CN59-2—B2-L22C (TCG/TCR)
CHARA GATE L
L28C
CN59-11—CN41-11—W2-R15B(ENCODER)
CHARACTOR L
L28A
CN59-10—CN41-10—W2-R16A(ENCODER)
FG TRBL L
IC42
Q8
Q4
Q7
Q6
Q2
Q5
Q3
Q1
2FSW L
INT SW L
EXT SW L
4F(8F)SW L
REC INHBIT SW L
YC SW L
LINE SW L
DIP SW
IC68
W16
FM MUT
Q47
IC48
TAPE STOP
IC22,IC23
IC73,IC74
SERIAL DATA ENCODE
EJECT SW L
1/32
1/16
1/8
1/4
1/2
JOG
SHTL
SERVO LOCK L
S.FRAMING
STAND BY ON
R/P HEAD
OUT SCLK
STB 16
P36 DEGITAL
P30 INPUT L
P34 PCM CONF L
P20 PCM EE1 L
P21 PCM EE2 L
PCM SEARCH
PLAY HEAD SW L
TAPE SW L
LIMITER SW L
DOLBY SW L
PINCH ON DELY SW
SW3
(PLAY DELAY)
TAPE SPEED SNS
PCM ERASE PCMON
REMI SW L
REM SW L
EXT NR SW L
ADDRES BUS
A0
A1
CONTROL BUS
IORD L
IOWR
RESET
RD
WR
P11 TEN DOWN
P11 ODD
P13 FORCED
CS1
CS0
FAN M TRBL L
ST
IC60,61
VOLTAGE REG TROUBLE DET
REF2.5V
Q38
Q39
Q40
Q41
Q42
Q43
Q44
Q45
Q46
Q34
Q35
Q36
Q37
HI SPEED ATT1
HI SPEED ATT2
CF LOCK L
CF MODE
TC DETECT L
R11C
CN50-23B—CN20-23B—W6-F6B(AUDIO)
DUB IN L
R15B
CN50-19A—CN20-19A—W6-R12A(AUDIO) / CN37-4—CN254-4 (VIDEO I/O)
CF SELECT1
R23A
CN50-8B—CN20-8B—W1-R31A(TBC & SYNC GEN)
CF SELECT2
R23B
CN50-7A—CN20-7A—W1-R30A(TBC & SYNC GEN)
CF SELECT3
R30B
CN50-7B—CN20-7B—W1-R30B(TBC & SYNC GEN)
COMPO CF ON L
R16B
CN50-18B—CN20-18B—W4-F20A·B(DEC & CTCM)
DUB CF ON L
R29A
CN50-8A—CN20-8A—W1-R26B(TBC & SYNC GEN)
R FRAMING
R28B
CN50-1A—CN20-1A—W1-R21A(TBC & SYNC GEN) / CN602-3A(DIGITAL INTERFACE)
IN SCH L
R16A
CN50-18A—CN20-18A—W4-R34A(DEC & CTCM)
REF SCH L
R21B
B2-7A(TCG/TCR) / CN50-10A—CN20-10A—W1-F27B(TBC & SYNC GEN)
FRAMING 12
R68
B2-26A(TCG/TCR) / CN50-30B—CN20-30B—W5-R16A(SERVO & DRIVE & AT)
ADV CONT
R24B
CN50-6B—CN20-6B—W1-F20B(TBC & SYNC GEN)
EXT L
R24A
CN50-6A—CN20-6A—W1-R33A(TBC & SYNC GEN)
VISC ON L
R16C
CN50-16B—CN20-16B—W4-F20A·B(DEC & CTCM)
INT L
R24A
B2-7C(TCG/TCR) / CN50-5B—CN20-5B—W1-R32A(TBC & SYNC GEN)
Y/C L
R17A
CN50-17B—CN20-17B—W4-F22A·B (DEC & CTCM) / CN37-1—CN254-1
EJECT TAPE L
R30A
CN50-5A—CN20-5A—W1-F19A(TBC & SYNC GEN)
FAN TROUBLE
R27A
CN50-2B—CN20-2B—W1-R35A(TBC & SYNC GEN)
14.5V
L4C
B2-4C(TCG/TCR)
−14.5V
L28B
CN20-21A—CN50-21A (SYSCON)
24V
L12C
POWER10-5 / CN55-14—CN115-14(MECHA INTERFACE) / CN56-8—CN138-8(FRONT INTERFACE)
7.5V
L3C
B2-3C(TCG/TCR) / CN51-5—CN30-5—W5-R2A·B(SERVO & DRIVE & AT)
−7.5V
L31C
B2-31C(TCG/TCR) / CN51-6—CN30-6—W5-R3A·B(SERVO & DRIVE & AT)
STD L
R20A
CN50-12A—CN20-12A—W1-R20B(TBC & SYNC GEN) / W4-R35B(DEC & CTCM)
ID OFF L
R19A
CN50-14B—CN20-14B—W2-415A(ENCODER) / CN602-18(DIGITAL INTERFACE)
DUB L
L17A
CN50-11A—CN20-11A—W1-R32B(TBC & SYNC GEN) / W4-R38A(DEC & CTCM)
LINE L
R20B
CN50-12B—CN20-12B—W1-R31B(TBC & SYNC GEN) / W4-F21A·B(DEC & CTCM) / CN37-2—CN254-2
V PHASH CF L
R19B
CN50-13A—CN20-13A—W2-F14A(ENCODER)
11.5V TRBL
−11.5V TRBL
IC61
VOLTAGE REG TROUBLE DET
11.5V
L11C
POWER10-2—B2-14C(TCG/TCR) / CN53-10B(REAR PANEL)
−11.5V
L30B
CN20-22A—CN50-22A (SYSCON)
CS18
CS19
IC45
OUT SCLK
STBB
CK
P/S
QH
IC54
X16
4F

B2 (TC & BB) BLOCK DIAGRAM 1/2 (TCG/TCR SECTION)[FOR AU-665] ⁎FOR AU-65/63/62, REFER TO AU-F65 SECTION

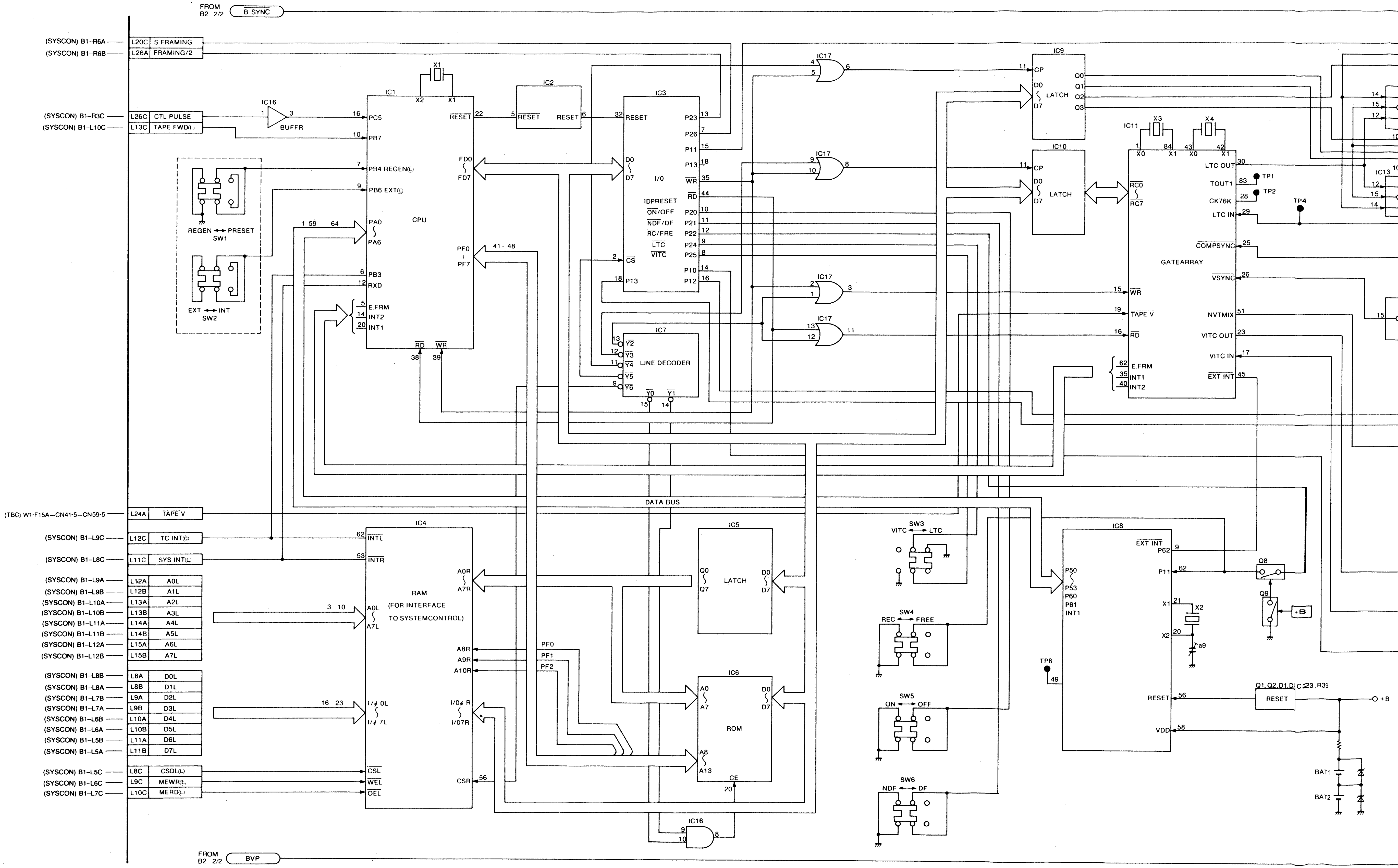

FROM B2 2/2
B SYNC
(SYSCON) B1-R6A
(SYSCON) B1-R6B
L20C S FRAMING
L26A FRAMING/2
(SYSCON) B1-R3C
(SYSCON) B1-L10C
L26C CTL PULSE
L13C TAPE FWD(L)
IC16
BUFFR
X1
IC1
CPU
PC5
PB7
PB4 REGEN(L)
PB6 EXT(L)
PA0
PA6
PB3
RXD
E.FRM
INT2
INT1
RESET
FD0
FD7
PF0
PF7
RD
WR
REGEN ↔ PRESET
SW1
EXT ↔ INT
SW2
IC2
RESET
IC3
I/O
IDPRESET
ON/OFF
NDF/DF
RC/FRE
LTC
VITC
CS
P13
P23
P26
P11
P13
WR
RD
P20
P21
P22
P24
P25
P10
P12
IC7
LINE DECODER
Y0
Y1
Y2
Y3
Y4
Y5
Y6
IC17
IC9
LATCH
CP
D0
D7
Q0
Q1
Q2
Q3
IC10
LATCH
IC11
X3
X4
X0
X1
GATEARRAY
RC0
RC7
WR
TAPE V
RD
E.FRM
INT1
INT2
LTC OUT
TOUT1
CK76K
LTC IN
COMPSYNC
VSYNC
NVTMIX
VITC OUT
VITC IN
EXT INT
TP1
TP2
TP4
IC13
DATA BUS
(TBC) W1-F15A—CN41-5—CN59-5
L24A TAPE V
(SYSCON) B1-L9C
L12C TC INT(C)
(SYSCON) B1-L8C
L11C SYS INT(L)
(SYSCON) B1-L9A
(SYSCON) B1-L9B
(SYSCON) B1-L10A
(SYSCON) B1-L10B
(SYSCON) B1-L11A
(SYSCON) B1-L11B
(SYSCON) B1-L12A
(SYSCON) B1-L12B
L12A A0L
L12B A1L
L13A A2L
L13B A3L
L14A A4L
L14B A5L
L15A A6L
L15B A7L
(SYSCON) B1-L8B
(SYSCON) B1-L8A
(SYSCON) B1-L7B
(SYSCON) B1-L7A
(SYSCON) B1-L6B
(SYSCON) B1-L6A
(SYSCON) B1-L5B
(SYSCON) B1-L5A
L8A D0L
L8B D1L
L9A D2L
L9B D3L
L10A D4L
L10B D5L
L11A D6L
L11B D7L
(SYSCON) B1-L5C
(SYSCON) B1-L6C
(SYSCON) B1-L7C
L8C CSDL(L)
L9C MEWR(L)
L10C MERD(L)
IC4
RAM
(FOR INTERFACE TO SYSTEMCONTROL)
INTL
INTR
A0L
A7L
I/ϕ 0L
I/ϕ 7L
CSL
WEL
OEL
A0R
A7R
A8R
A9R
A10R
I/0ϕ R
I/07R
CSR
PF0
PF1
PF2
IC5
LATCH
Q0
Q7
D0
D7
IC6
ROM
A0
A7
A8
A13
CE
IC16
SW3
VITC ↔ LTC
SW4
REC ↔ FREE
SW5
ON ↔ OFF
SW6
NDF ↔ DF
TP6
IC8
EXT INT
P62
P11
P50
P53
P60
P61
INT1
X1
X2
RESET
VDD
X2
a9
Q8
Q9
+B
Q1,Q2,D1,D2,C23,R39
RESET
BAT1
BAT2
FROM B2 2/2
BVP

AM 1/2 (TCG/TCR SECTION)[FOR AU-665] ⁎FOR AU-65/63/62, REFER TO AU-F65 SECTION

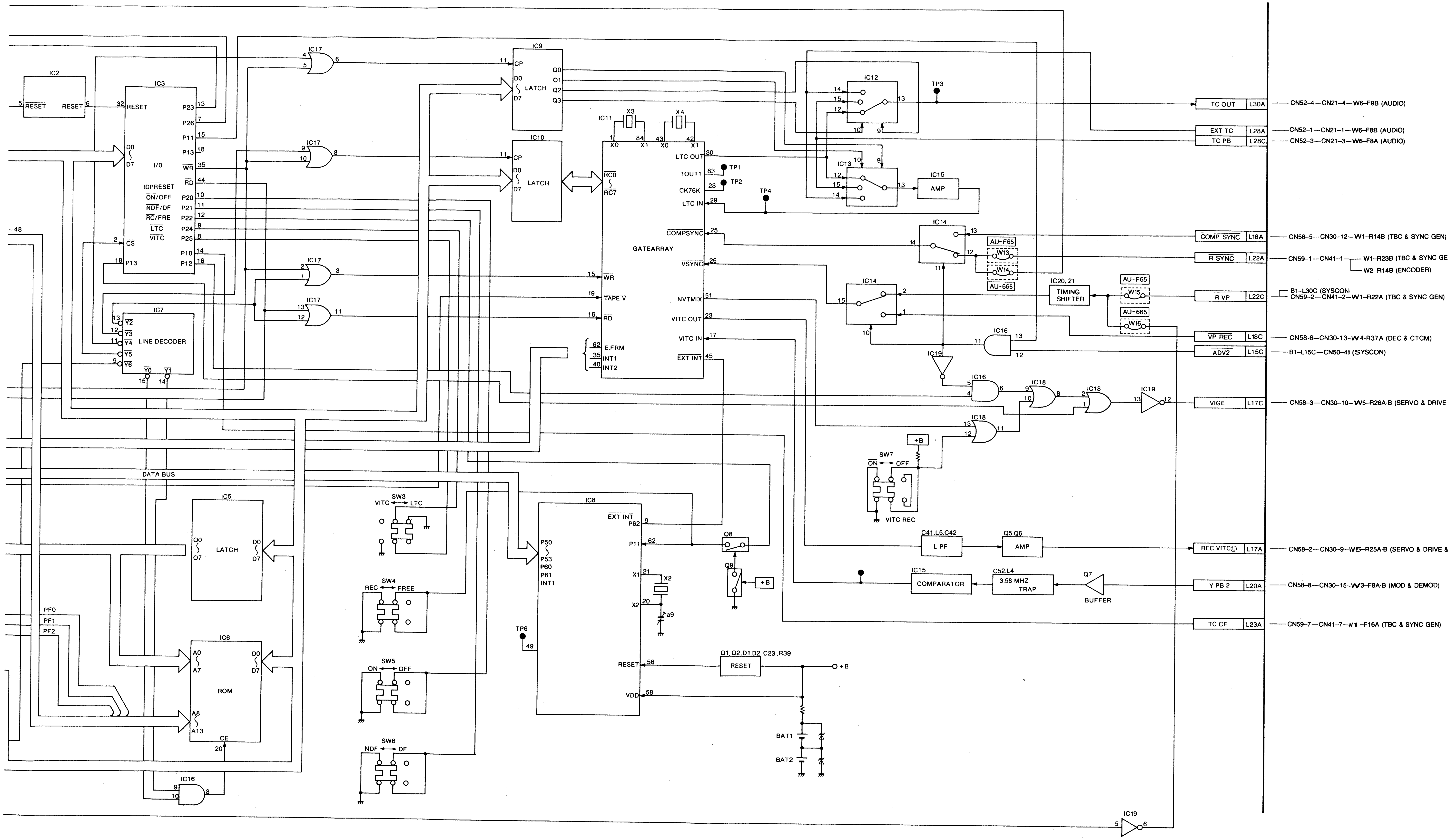
IC2
RESET
RESET
IC3
RESET
D0
D7
I/O
IDPRESET
ON/OFF
NDF/DF
RC/FRE
LTC
VITC
CS
P13
P23
P26
P11
P13
WR
RD
P20
P21
P22
P24
P25
P10
P12
IC7
LINE DECODER
Y2
Y3
Y4
Y5
Y6
Y0
Y1
IC17
IC9
CP
D0
D7
LATCH
Q0
Q1
Q2
Q3
IC10
LATCH
IC11
X3
X4
X0
X1
LTC OUT
TOUT1
CK76K
LTC IN
RC0
RC7
TP1
TP2
TP3
TP4
COMPSYNC
GATEARRAY
VSYNC
WR
TAPE V
RD
NVTMIX
VITC OUT
VITC IN
EXT INT
E.FRM
INT1
INT2
IC12
IC13
IC15
AMP
IC14
AU-F65
W13
W14
AU-665
IC20, 21
TIMING SHIFTER
W15
W16
IC16
IC18
IC19
SW7
ON
OFF
VITC REC
+B
DATA BUS
IC5
Q0
Q7
LATCH
D0
D7
IC6
A0
A7
A8
A13
ROM
CE
PF0
PF1
PF2
IC16
SW3
VITC
LTC
SW4
REC
FREE
SW5
ON
OFF
SW6
NDF
DF
IC8
EXT INT
P62
P11
P50
P53
P60
P61
INT1
X1
X2
X2
a9
TP6
RESET
VDD
Q8
Q9
+B
Q1, Q2, D1, D2, C23, R39
RESET
+B
BAT1
BAT2
C41, L5, C42
L PF
Q5, Q6
AMP
IC15
COMPARATOR
C52, L4
3.58 MHZ TRAP
Q7
BUFFER
TC OUT
L30A
CN52–4—CN21–4—W6–F9B (AUDIO)
EXT TC
L28A
CN52–1—CN21–1—W6–F8B (AUDIO)
TC PB
L28C
CN52–3—CN21–3—W6–F8A (AUDIO)
COMP SYNC
L18A
CN58–5—CN30–12—W1–R14B (TBC & SYNC GEN)
R SYNC
L22A
CN59–1—CN41–1
W1–R23B (TBC & SYNC GE
W2–R14B (ENCODER)
R VP
L22C
B1–L30C (SYSCON)
CN59–2—CN41–2—W1–R22A (TBC & SYNC GEN)
VP REC
L18C
CN58-6—CN30-13–W4-R37A (DEC & CTCM)
ADV2
L15C
B1–L15C—CN50–4B (SYSCON)
VIGE
L17C
CN58–3—CN30–10—W5–R26A·B (SERVO & DRIVE
REC VITCⓁ
L17A
CN58–2—CN30–9—W5–R25A·B (SERVO & DRIVE &
Y PB 2
L20A
CN58–8—CN30–15–W3–F8A·B (MOD & DEMOD)
TC CF
L23A
CN59–7—CN41–7—W1–F16A (TBC & SYNC GEN)

B2 (TC & BB) BLOCK DIAGRAM 2/2 (BLACK BURST SECTION)[FOR AU-665]

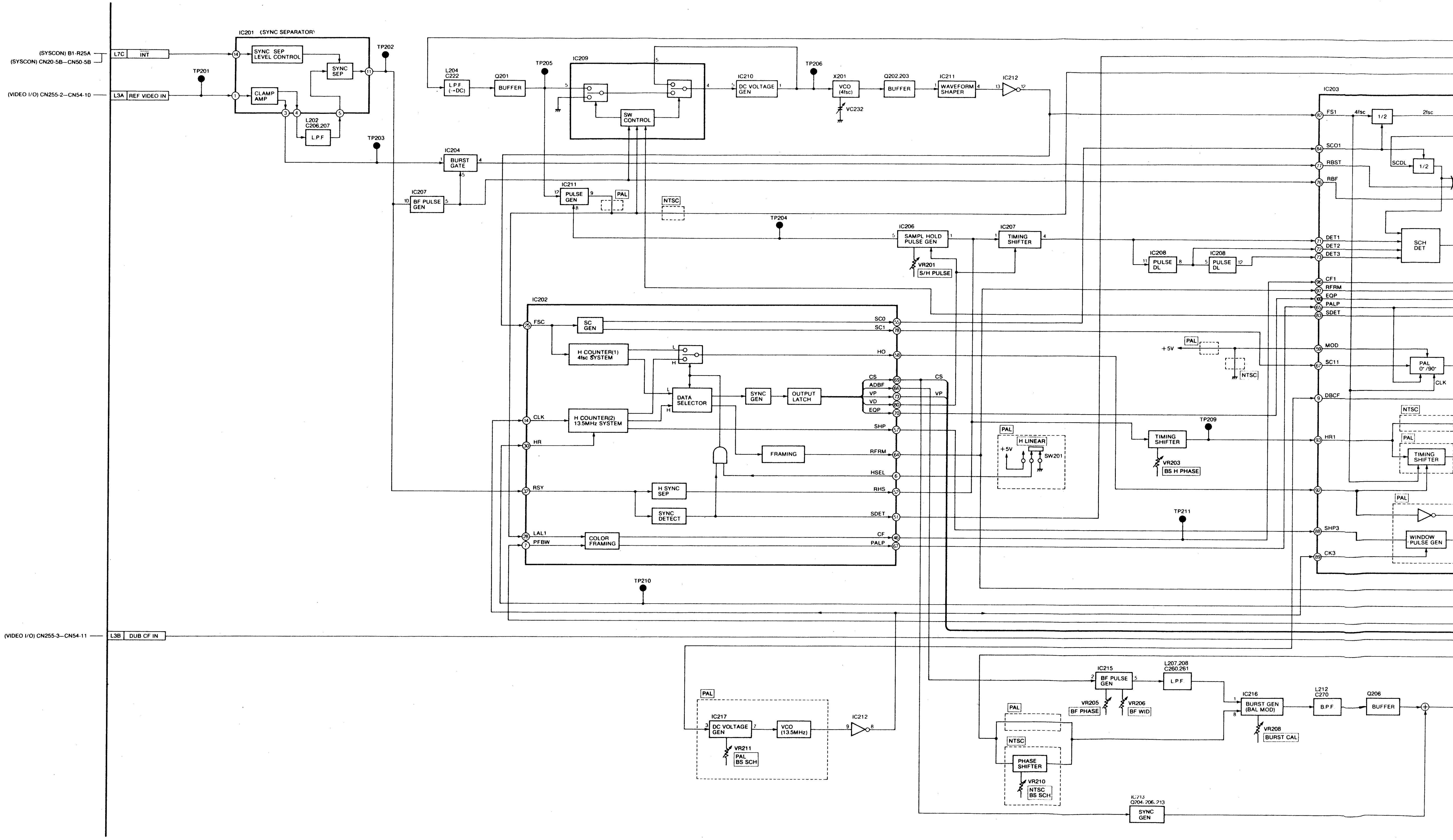
(SYSCON) B1-R25A
(SYSCON) CN20-5B—CN50-5B
(VIDEO I/O) CN255-2—CN54-10
(VIDEO I/O) CN255-3—CN54-11
L7C INT
L3A REF VIDEO IN
L3B DUB CF IN
TP201
IC201 (SYNC SEPARATOR)
SYNC SEP LEVEL CONTROL
SYNC SEP
CLAMP AMP
L202 C206,207
LPF
TP202
TP203
L204 C222
LPF (+DC)
Q201
BUFFER
TP205
IC209
SW CONTROL
IC210
DC VOLTAGE GEN
TP206
X201
VCO (4fsc)
VC232
Q202,203
BUFFER
IC211
WAVEFORM SHAPER
IC212
IC204
BURST GATE
IC207
BF PULSE GEN
IC211
PULSE GEN
PAL
NTSC
TP204
IC206
SAMPL HOLD PULSE GEN
VR201
S/H PULSE
IC207
TIMING SHIFTER
IC208
PULSE DL
IC208
PULSE DL
IC203
FS1
4fsc
1/2
2fsc
SCO1
RBST
SCDL
1/2
RBF
SCH DET
DET1
DET2
DET3
CF1
RFRM
EQP
PALP
SDET
MOD
SC11
PAL 0°/90°
CLK
DBCF
NTSC
PAL
TIMING SHIFTER
HR1
SHP3
CK3
PAL
WINDOW PULSE GEN
IC202
FSC
SC GEN
SCO
SC1
H COUNTER(1) 4fsc SYSTEM
HO
DATA SELECTOR
SYNC GEN
OUTPUT LATCH
CS
ADBF
VP
VD
EQP
CS
VP
CLK
H COUNTER(2) 13.5MHz SYSTEM
SHP
HR
FRAMING
RFRM
HSEL
RSY
H SYNC SEP
RHS
SYNC DETECT
SDET
LAL1
PFBW
COLOR FRAMING
CF
PALP
+5V
PAL
NTSC
PAL
H LINEAR
+5V
SW201
TIMING SHIFTER
TP209
VR203
BS H PHASE
TP211
TP210
IC215
BF PULSE GEN
L207,208 C260,261
LPF
VR205
BF PHASE
VR206
BF WID
IC216
BURST GEN (BAL MOD)
VR208
BURST CAL
L212 C270
BPF
Q206
BUFFER
PAL
IC217
DC VOLTAGE GEN
VCO (13.5MHz)
VR211
PAL BS SCH
IC212
PAL
NTSC
PHASE SHIFTER
VR210
NTSC BS SCH
IC213 Q204,206,213
SYNC GEN

LACK BURST SECTION)[FOR AU-665]

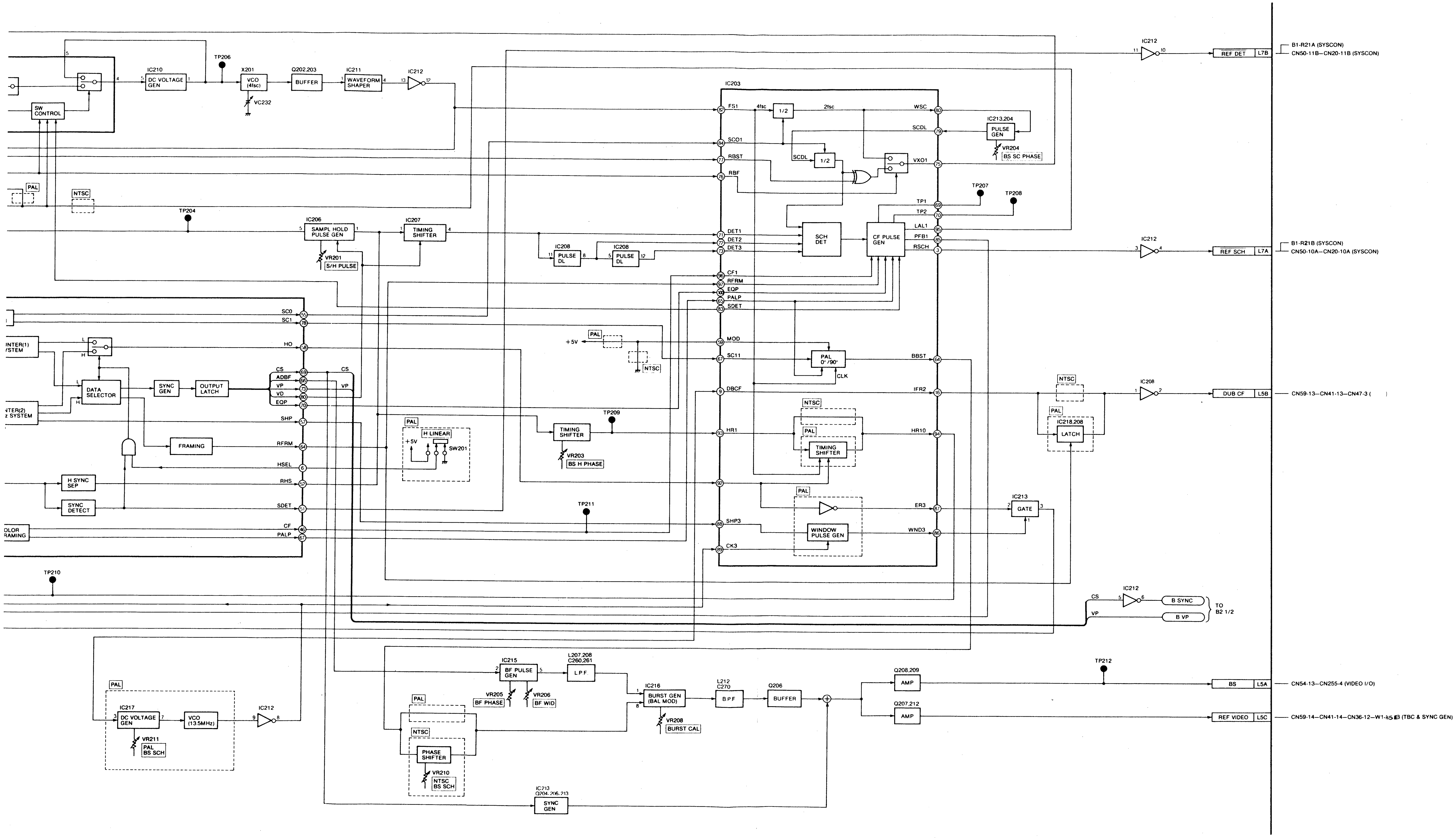
SW CONTROL
IC210
DC VOLTAGE GEN
TP206
X201
VCO (4fsc)
VC232
Q202,203
BUFFER
IC211
WAVEFORM SHAPER
IC212
PAL
NTSC
TP204
IC206
SAMPL HOLD PULSE GEN
VR201
S/H PULSE
IC207
TIMING SHIFTER
IC208
PULSE DL
IC203
FS1
4fsc
1/2
2fsc
WSC
SCDL
SCO1
RBST
RBF
VXO1
IC213,204
PULSE GEN
VR204
BS SC PHASE
TP207
TP208
TP1
TP2
LAL1
PFB1
RSCH
SCH DET
CF PULSE GEN
DET1
DET2
DET3
CF1
RFRM
EQP
PALP
SDET
MOD
SC11
PAL 0°/90°
CLK
BBST
DBCF
IFR2
HR1
HR10
TIMING SHIFTER
ER3
WND3
WINDOW PULSE GEN
SHP3
CK3
+5V
SCO
SC1
HO
CS
ADBF
VP
VD
EOP
SHP
RFRM
HSEL
RHS
SDET
CF
PALP
INTER(1) SYSTEM
INTER(2) SYSTEM
DATA SELECTOR
SYNC GEN
OUTPUT LATCH
FRAMING
H SYNC SEP
SYNC DETECT
OLOR RAMING
H LINEAR
SW201
TIMING SHIFTER
VR203
BS H PHASE
TP209
TP211
IC218,208
LATCH
IC213
GATE
IC212
REF DET
L7B
B1-R21A (SYSCON)
CN50-11B—CN20-11B (SYSCON)
REF SCH
L7A
B1-R21B (SYSCON)
CN50-10A—CN20-10A (SYSCON)
DUB CF
L5B
CN59-13—CN41-13—CN47-3 ( )
B SYNC
B VP
TO B2 1/2
TP210
IC217
DC VOLTAGE GEN
VCO (13.5MHz)
VR211
PAL BS SCH
IC215
BF PULSE GEN
VR205
BF PHASE
VR206
BF WID
L207,208 C260,261
LPF
IC216
BURST GEN (BAL MOD)
VR208
BURST CAL
L212 C270
BPF
Q206
BUFFER
PHASE SHIFTER
VR210
NTSC BS SCH
IC213 Q204,206,213
SYNC GEN
TP212
Q208,209
AMP
Q207,212
AMP
BS
L5A
CN54-13—CN255-4 (VIDEO I/O)
REF VIDEO
L5C
CN59-14—CN41-14—CN36-12—W1-45B (TBC & SYNC GEN)

AT POWER BLOCK DIAGRAM[FOR AU-665,AU-63]

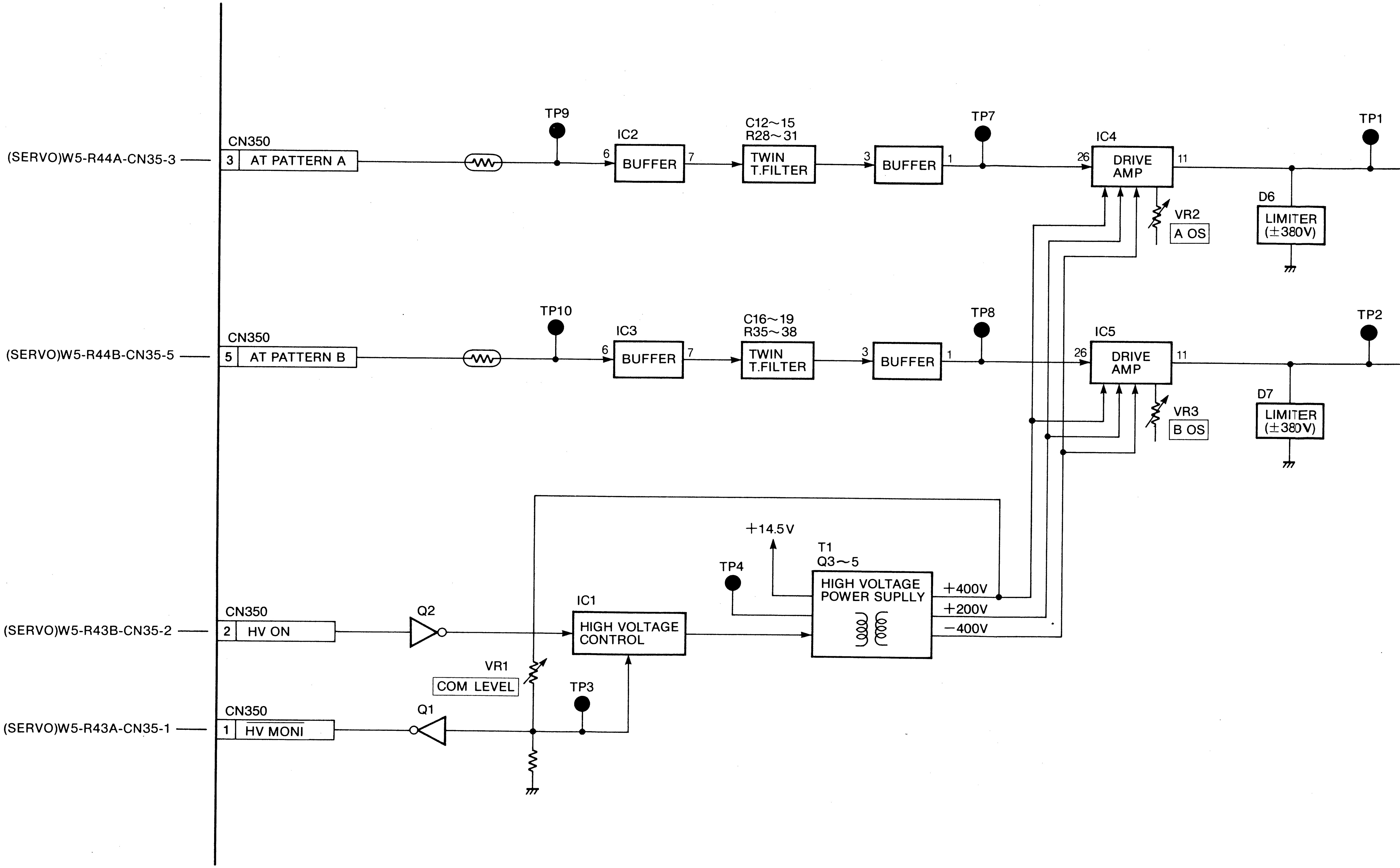
(SERVO)W5-R44A-CN35-3
CN350
3 AT PATTERN A
TP9
IC2
6 BUFFER 7
C12~15
R28~31
TWIN T.FILTER
3 BUFFER 1
TP7
IC4
26 DRIVE AMP 11
TP1
VR2
A OS
D6
LIMITER (±380V)
(SERVO)W5-R44B-CN35-5
CN350
5 AT PATTERN B
TP10
IC3
6 BUFFER 7
C16~19
R35~38
TWIN T.FILTER
3 BUFFER 1
TP8
IC5
26 DRIVE AMP 11
TP2
VR3
B OS
D7
LIMITER (±380V)
+14.5V
T1
Q3~5
TP4
HIGH VOLTAGE POWER SUPLLY
+400V
+200V
−400V
(SERVO)W5-R43B-CN35-2
CN350
2 HV ON
Q2
IC1
HIGH VOLTAGE CONTROL
VR1
COM LEVEL
TP3
(SERVO)W5-R43A-CN35-1
CN350
1 HV MONI
Q1

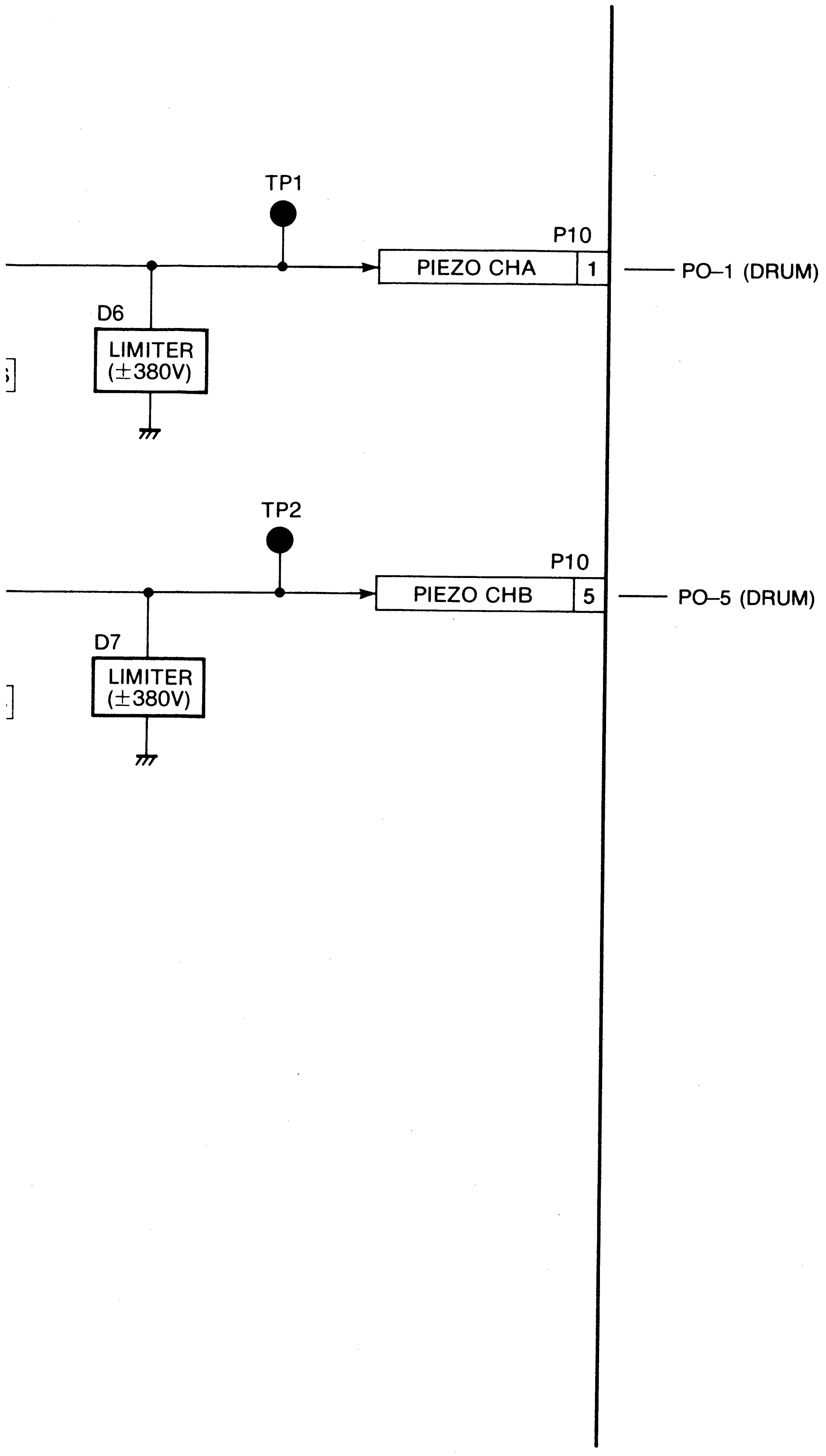
TP1
P10
PIEZO CHA
1
PO–1 (DRUM)
D6
LIMITER (±380V)
TP2
P10
PIEZO CHB
5
PO–5 (DRUM)
D7
LIMITER (±380V)

AUDIO I/O BLOCK DIAGRAM

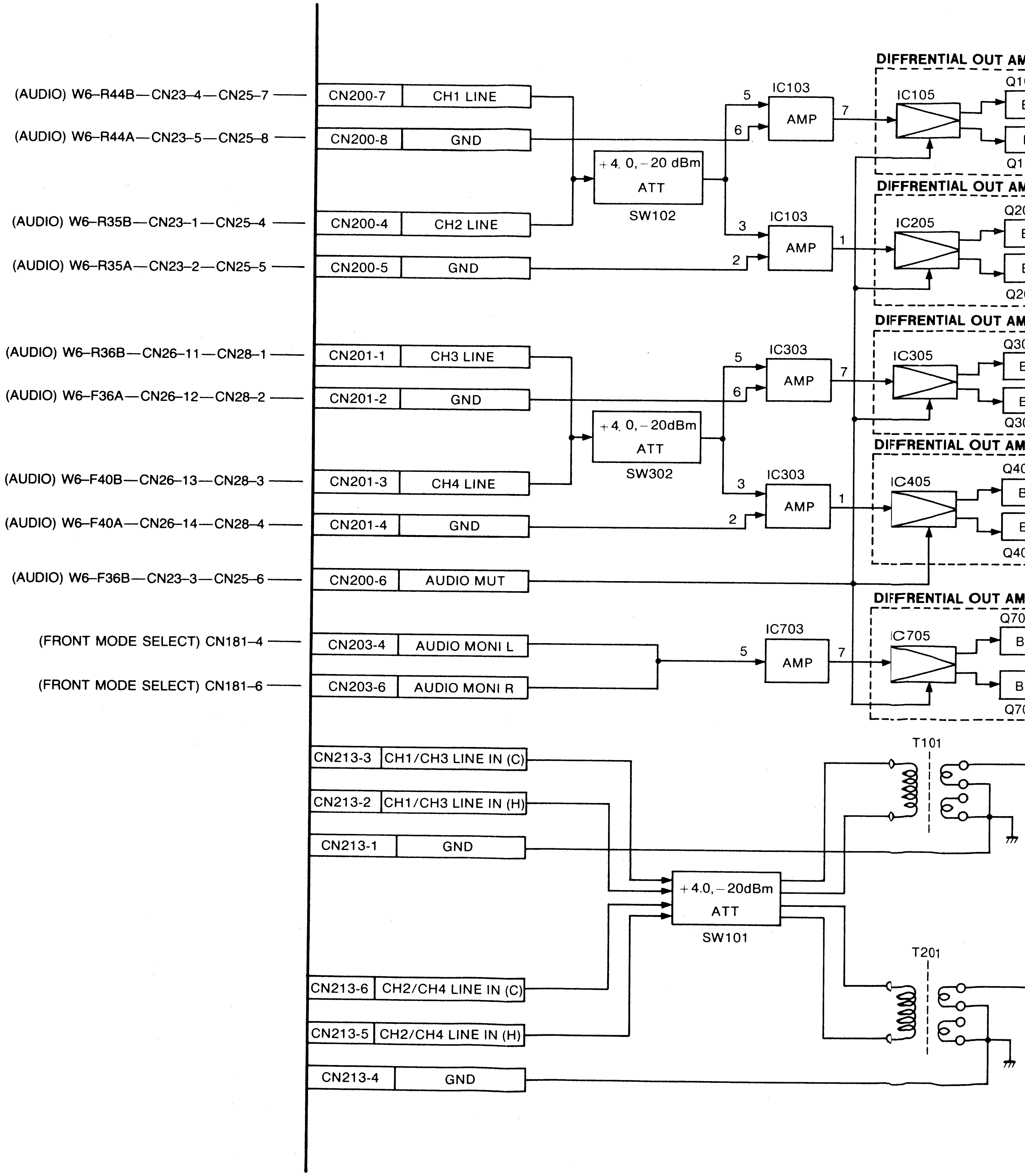
(AUDIO) W6–R44B—CN23–4—CN25–7
(AUDIO) W6–R44A—CN23–5—CN25–8
(AUDIO) W6–R35B—CN23–1—CN25–4
(AUDIO) W6–R35A—CN23–2—CN25–5
(AUDIO) W6–R36B—CN26–11—CN28–1
(AUDIO) W6–F36A—CN26–12—CN28–2
(AUDIO) W6–F40B—CN26–13—CN28–3
(AUDIO) W6–F40A—CN26–14—CN28–4
(AUDIO) W6–F36B—CN23–3—CN25–6
(FRONT MODE SELECT) CN181–4
(FRONT MODE SELECT) CN181–6
CN200-7
CH1 LINE
CN200-8
GND
CN200-4
CH2 LINE
CN200-5
GND
CN201-1
CH3 LINE
CN201-2
GND
CN201-3
CH4 LINE
CN201-4
GND
CN200-6
AUDIO MUT
CN203-4
AUDIO MONI L
CN203-6
AUDIO MONI R
CN213-3
CH1/CH3 LINE IN (C)
CN213-2
CH1/CH3 LINE IN (H)
CN213-1
GND
CN213-6
CH2/CH4 LINE IN (C)
CN213-5
CH2/CH4 LINE IN (H)
CN213-4
GND
+4. 0, –20 dBm
ATT
SW102
+4. 0, –20dBm
ATT
SW302
+4.0, –20dBm
ATT
SW101
IC103
AMP
IC103
AMP
IC303
AMP
IC303
AMP
IC703
AMP
5
6
7
3
2
1
DIFFRENTIAL OUT AM
IC105
Q1
DIFFRENTIAL OUT AM
IC205
Q2
DIFFRENTIAL OUT AM
IC305
Q3
DIFFRENTIAL OUT AM
IC405
Q4
DIFFRENTIAL OUT AM
IC705
Q7
T101
T201

AUDIO I/O BLOCK DIAGRAM

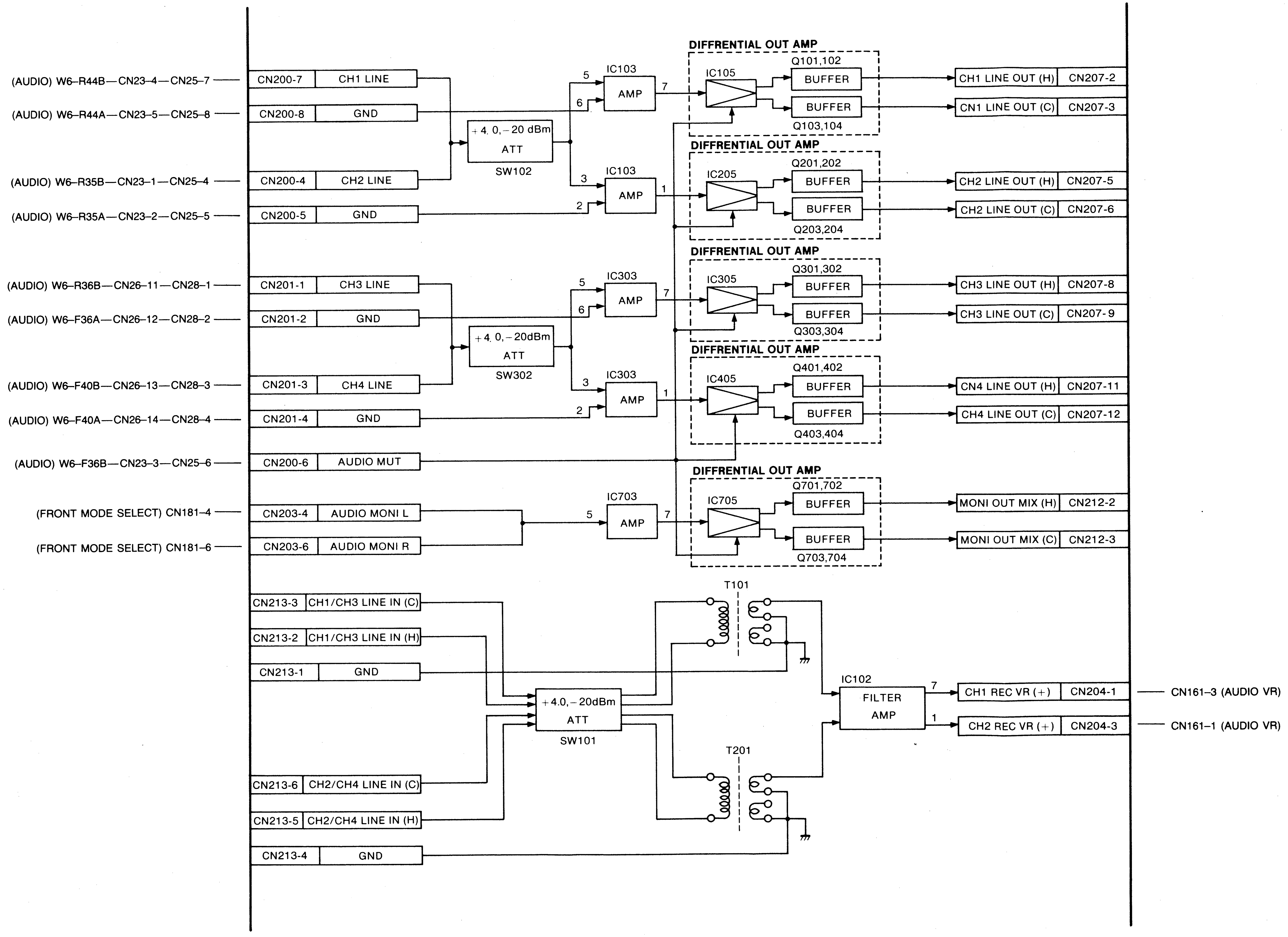
(AUDIO) W6–R44B—CN23–4—CN25–7
(AUDIO) W6–R44A—CN23–5—CN25–8
(AUDIO) W6–R35B—CN23–1—CN25–4
(AUDIO) W6–R35A—CN23–2—CN25–5
(AUDIO) W6–R36B—CN26–11—CN28–1
(AUDIO) W6–F36A—CN26–12—CN28–2
(AUDIO) W6–F40B—CN26–13—CN28–3
(AUDIO) W6–F40A—CN26–14—CN28–4
(AUDIO) W6–F36B—CN23–3—CN25–6
(FRONT MODE SELECT) CN181–4
(FRONT MODE SELECT) CN181–6
CN200-7
CH1 LINE
CN200-8
GND
CN200-4
CH2 LINE
CN200-5
GND
CN201-1
CH3 LINE
CN201-2
GND
CN201-3
CH4 LINE
CN201-4
GND
CN200-6
AUDIO MUT
CN203-4
AUDIO MONI L
CN203-6
AUDIO MONI R
CN213-3
CH1/CH3 LINE IN (C)
CN213-2
CH1/CH3 LINE IN (H)
CN213-1
GND
CN213-6
CH2/CH4 LINE IN (C)
CN213-5
CH2/CH4 LINE IN (H)
CN213-4
GND
+4. 0, –20 dBm
ATT
SW102
+4. 0, –20dBm
ATT
SW302
+4.0, –20dBm
ATT
SW101
IC103
AMP
5
6
7
IC103
AMP
3
2
1
IC303
AMP
5
6
7
IC303
AMP
3
2
1
IC703
AMP
5
7
DIFFRENTIAL OUT AMP
IC105
Q101,102
BUFFER
BUFFER
Q103,104
DIFFRENTIAL OUT AMP
IC205
Q201,202
BUFFER
BUFFER
Q203,204
DIFFRENTIAL OUT AMP
IC305
Q301,302
BUFFER
BUFFER
Q303,304
DIFFRENTIAL OUT AMP
IC405
Q401,402
BUFFER
BUFFER
Q403,404
DIFFRENTIAL OUT AMP
IC705
Q701,702
BUFFER
BUFFER
Q703,704
T101
T201
IC102
FILTER
AMP
7
1
CH1 LINE OUT (H)
CN207-2
CN1 LINE OUT (C)
CN207-3
CH2 LINE OUT (H)
CN207-5
CH2 LINE OUT (C)
CN207-6
CH3 LINE OUT (H)
CN207-8
CH3 LINE OUT (C)
CN207-9
CN4 LINE OUT (H)
CN207-11
CH4 LINE OUT (C)
CN207-12
MONI OUT MIX (H)
CN212-2
MONI OUT MIX (C)
CN212-3
CH1 REC VR (+)
CN204-1
CH2 REC VR (+)
CN204-3
CN161–3 (AUDIO VR)
CN161–1 (AUDIO VR)

AUDIO VR BLOCK DIAGRAM[FOR AU-665]

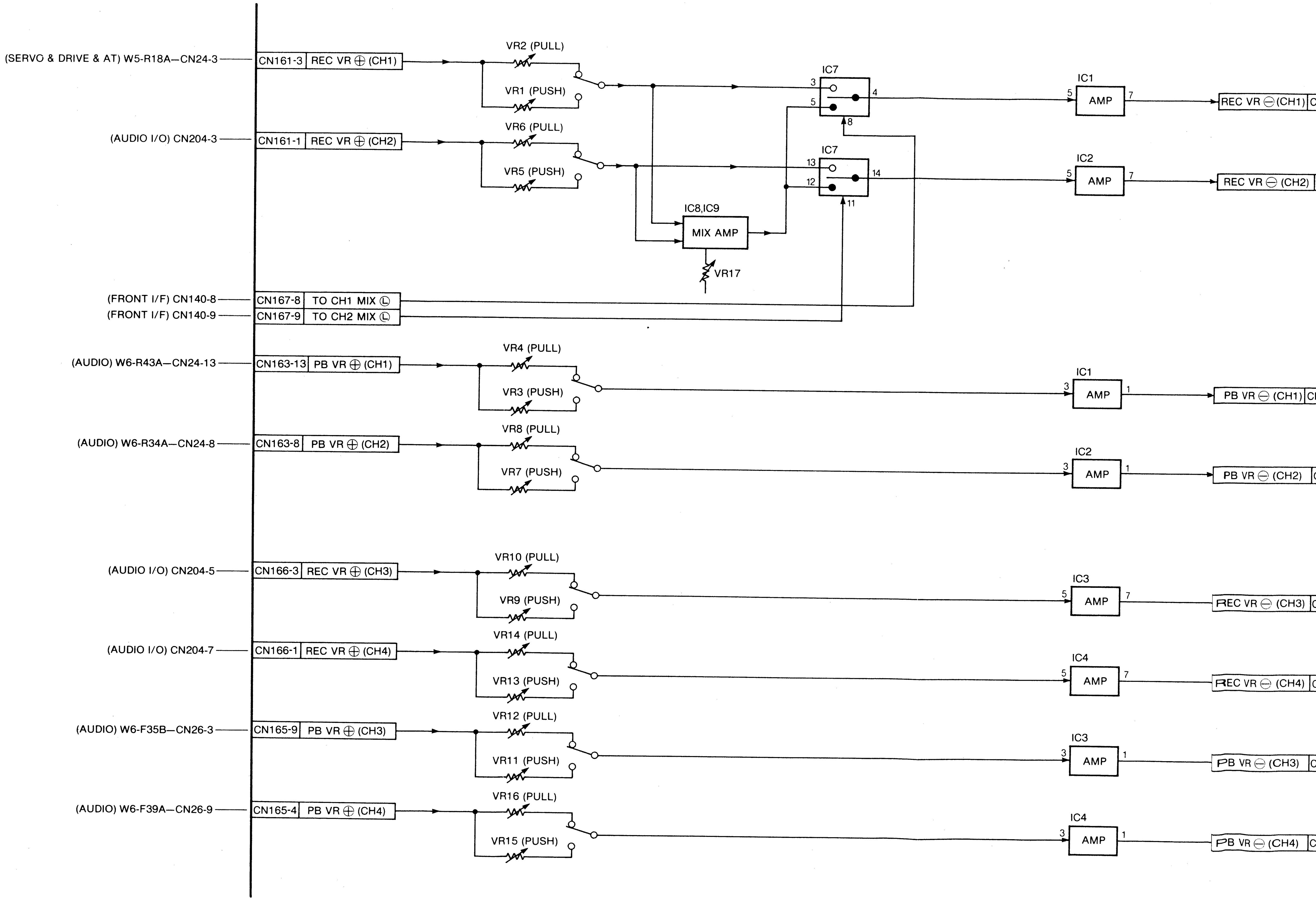
(SERVO & DRIVE & AT) W5-R18A—CN24-3
CN161-3
REC VR ⊕ (CH1)
VR2 (PULL)
VR1 (PUSH)
(AUDIO I/O) CN204-3
CN161-1
REC VR ⊕ (CH2)
VR6 (PULL)
VR5 (PUSH)
IC7
3
5
4
8
IC7
13
12
14
11
IC8,IC9
MIX AMP
VR17
IC1
5
AMP
7
REC VR ⊖ (CH1)
IC2
5
AMP
7
REC VR ⊖ (CH2)
(FRONT I/F) CN140-8
(FRONT I/F) CN140-9
CN167-8
TO CH1 MIX Ⓛ
CN167-9
TO CH2 MIX Ⓛ
(AUDIO) W6-R43A—CN24-13
CN163-13
PB VR ⊕ (CH1)
VR4 (PULL)
VR3 (PUSH)
IC1
3
AMP
1
PB VR ⊖ (CH1)
(AUDIO) W6-R34A—CN24-8
CN163-8
PB VR ⊕ (CH2)
VR8 (PULL)
VR7 (PUSH)
IC2
3
AMP
1
PB VR ⊖ (CH2)
(AUDIO I/O) CN204-5
CN166-3
REC VR ⊕ (CH3)
VR10 (PULL)
VR9 (PUSH)
IC3
5
AMP
7
REC VR ⊖ (CH3)
(AUDIO I/O) CN204-7
CN166-1
REC VR ⊕ (CH4)
VR14 (PULL)
VR13 (PUSH)
IC4
5
AMP
7
REC VR ⊖ (CH4)
(AUDIO) W6-F35B—CN26-3
CN165-9
PB VR ⊕ (CH3)
VR12 (PULL)
VR11 (PUSH)
IC3
3
AMP
1
PB VR ⊖ (CH3)
(AUDIO) W6-F39A—CN26-9
CN165-4
PB VR ⊕ (CH4)
VR16 (PULL)
VR15 (PUSH)
IC4
3
AMP
1
PB VR ⊖ (CH4)

AUDIO VR BLOCK DIAGRAM[FOR AU-65,AU-63,AU-62]

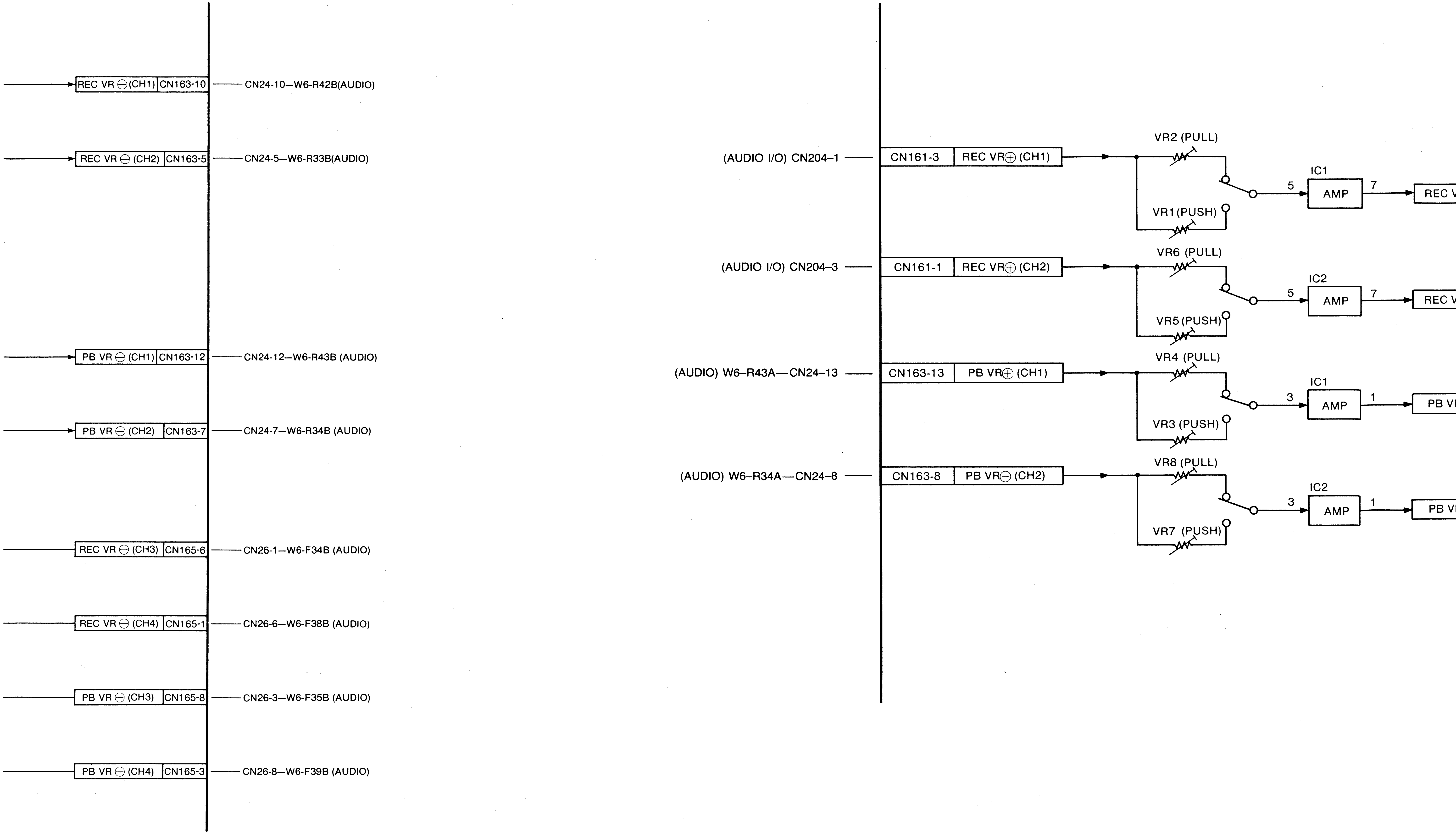
REC VR ⊖ (CH1)
CN163-10
CN24-10—W6-R42B(AUDIO)
REC VR ⊖ (CH2)
CN163-5
CN24-5—W6-R33B(AUDIO)
PB VR ⊖ (CH1)
CN163-12
CN24-12—W6-R43B (AUDIO)
PB VR ⊖ (CH2)
CN163-7
CN24-7—W6-R34B (AUDIO)
REC VR ⊖ (CH3)
CN165-6
CN26-1—W6-F34B (AUDIO)
REC VR ⊖ (CH4)
CN165-1
CN26-6—W6-F38B (AUDIO)
PB VR ⊖ (CH3)
CN165-8
CN26-3—W6-F35B (AUDIO)
PB VR ⊖ (CH4)
CN165-3
CN26-8—W6-F39B (AUDIO)
(AUDIO I/O) CN204–1
CN161-3
REC VR⊕ (CH1)
VR2 (PULL)
VR1 (PUSH)
IC1
5
AMP
7
REC V
(AUDIO I/O) CN204–3
CN161-1
REC VR⊕ (CH2)
VR6 (PULL)
VR5 (PUSH)
IC2
5
AMP
7
REC V
(AUDIO) W6–R43A—CN24–13
CN163-13
PB VR⊕ (CH1)
VR4 (PULL)
VR3 (PUSH)
IC1
3
AMP
1
PB V
(AUDIO) W6–R34A—CN24–8
CN163-8
PB VR⊖ (CH2)
VR8 (PULL)
VR7 (PUSH)
IC2
3
AMP
1
PB V

AUDIO VR BLOCK DIAGRAM[FOR AU-65,AU-63,AU-62]

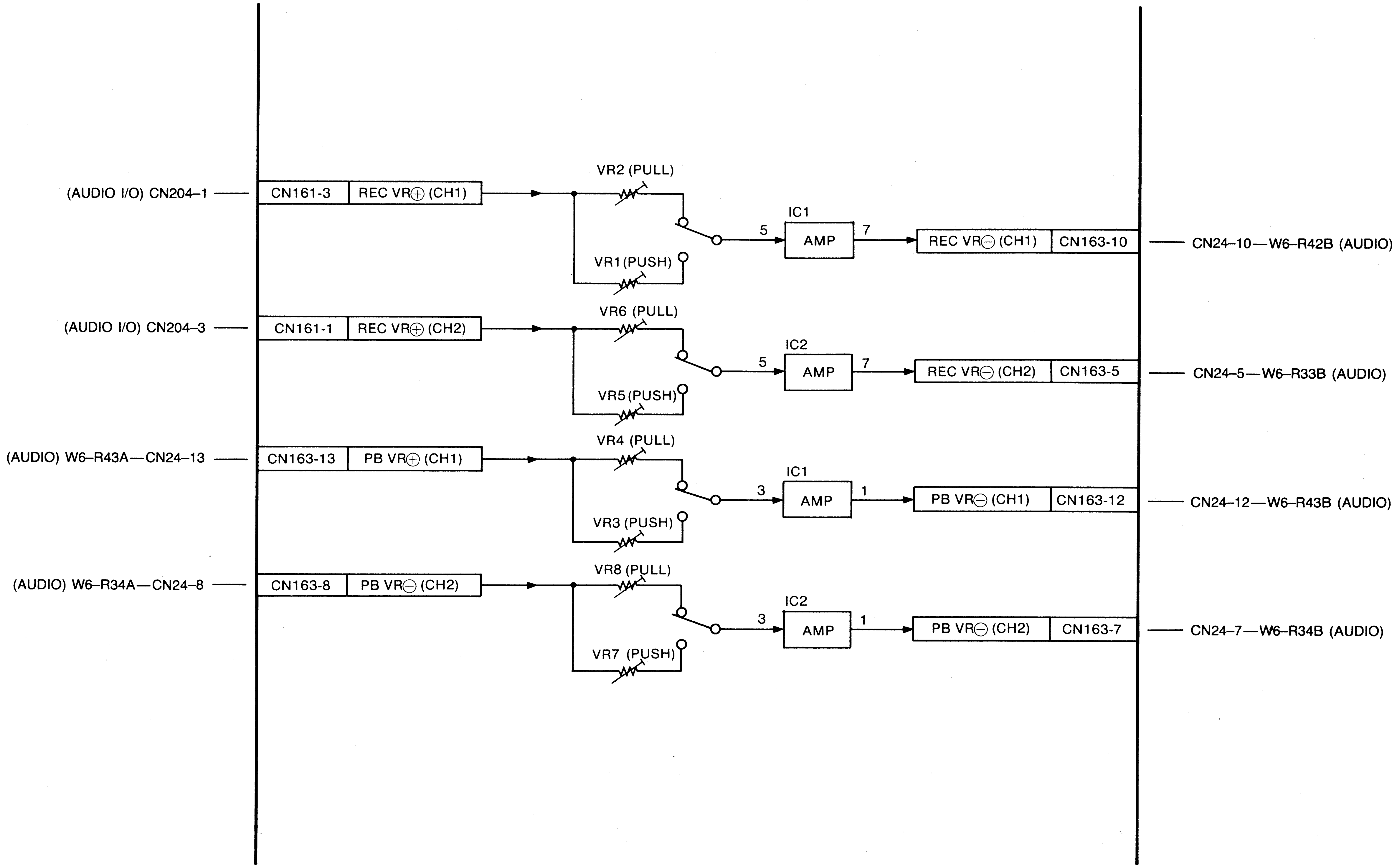
(AUDIO I/O) CN204–1
CN161-3
REC VR⊕ (CH1)
VR2 (PULL)
VR1 (PUSH)
IC1
5
AMP
7
REC VR⊖ (CH1)
CN163-10
CN24–10—W6–R42B (AUDIO)
(AUDIO I/O) CN204–3
CN161-1
REC VR⊕ (CH2)
VR6 (PULL)
VR5 (PUSH)
IC2
5
AMP
7
REC VR⊖ (CH2)
CN163-5
CN24–5—W6–R33B (AUDIO)
(AUDIO) W6–R43A—CN24–13
CN163-13
PB VR⊕ (CH1)
VR4 (PULL)
VR3 (PUSH)
IC1
3
AMP
1
PB VR⊖ (CH1)
CN163-12
CN24–12—W6–R43B (AUDIO)
(AUDIO) W6–R34A—CN24–8
CN163-8
PB VR⊖ (CH2)
VR8 (PULL)
VR7 (PUSH)
IC2
3
AMP
1
PB VR⊖ (CH2)
CN163-7
CN24–7—W6–R34B (AUDIO)

FRONT PANEL A.B.C BLOCK DIAGRAM[FOR AU-665 NTSC]

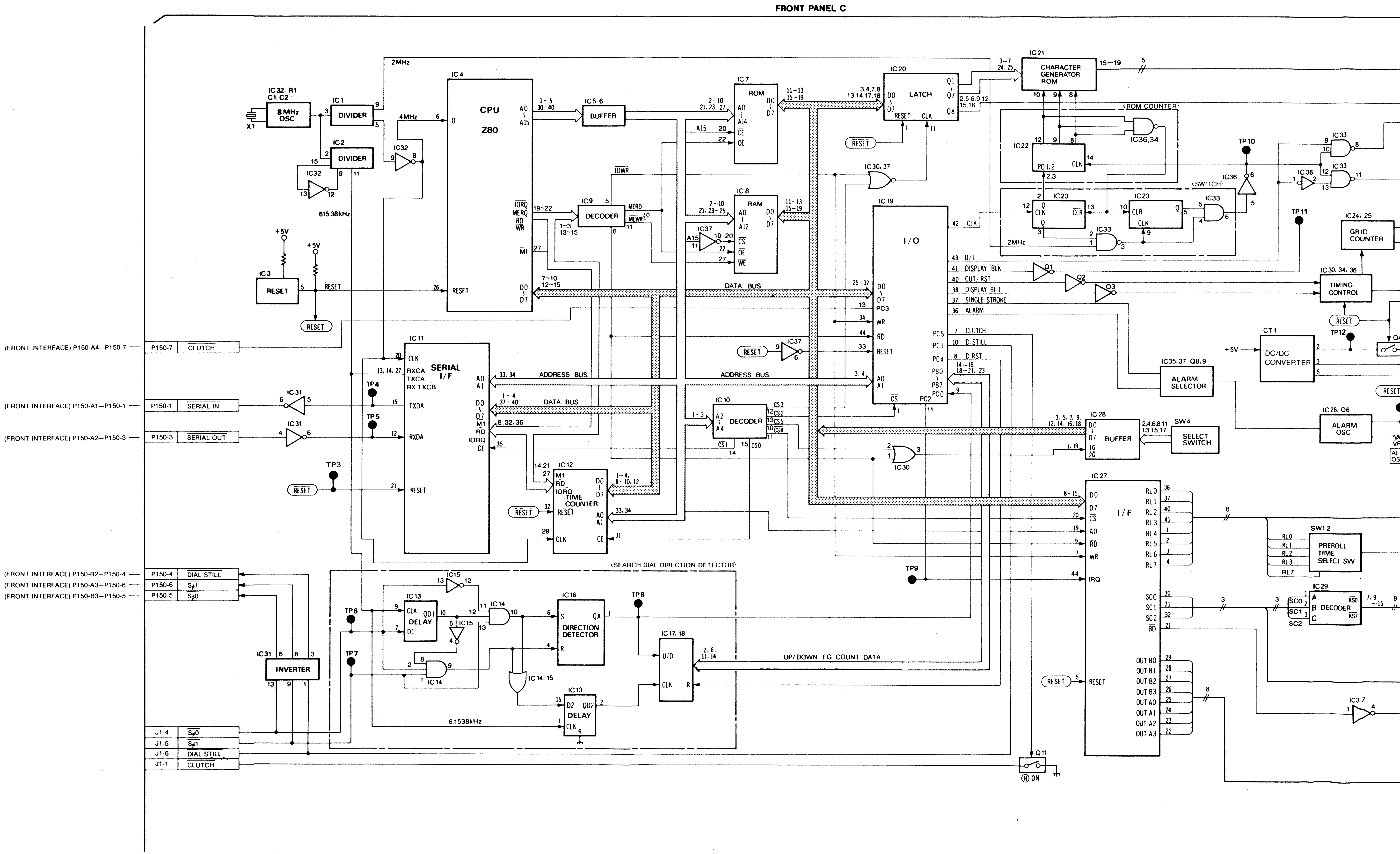

FRONT PANEL C
IC32, R1 C1, C2
8MHz OSC
X1
IC1 DIVIDER
IC2 DIVIDER
IC32
2MHz
4MHz
615.38kHz
IC3 RESET
+5V
RESET
IC4 CPU Z80
A0 ~ A15
IORQ
MERQ
RD
WR
MI
D0 ~ D7
IC5, 6 BUFFER
IC9 DECODER
IOWR
MERD
MEWR
IC7 ROM
A0 ~ A14
CE
OE
IC8 RAM
A0 ~ A12
CS
OE
WE
IC37
A15
DATA BUS
ADDRESS BUS
IC20 LATCH
Q1 ~ Q7
Q8
CLK
IC21 CHARACTER GENERATOR ROM
15~19
ROM COUNTER
IC22
IC36,34
IC23
IC33
SWITCH
TP10
IC36
IC19 I/O
CLK
U/L
DISPLAY BLK
CUT/RST
DISPLAY BL 1
SINGLE STROKE
ALARM
CLUTCH
D.STILL
D.RST
PC0 ~ PC5
PB0 ~ PB7
Q1
Q2
Q3
TP11
IC24, 25 GRID COUNTER
IC30, 34, 36 TIMING CONTROL
TP12
CT1 DC/DC CONVERTER
IC35, 37 Q8, 9 ALARM SELECTOR
IC26, Q6 ALARM OSC
IC30, 37
IC11 SERIAL I/F
CLK
RXCA
TXCA
RX TXCB
TXDA
RXDA
IC31
TP3
TP4
TP5
IC10 DECODER
CS0 ~ CS5
IC30
IC28 BUFFER
SW4 SELECT SWITCH
IC12 TIME COUNTER
IC27 I/F
RL0 ~ RL7
SC0 ~ SC2
BD
OUT B0 ~ OUT B3
OUT A0 ~ OUT A3
IRQ
TP9
SW1,2 PRELOLL TIME SELECT SW
IC29 DECODER
KS0
KS7
IC37
SEARCH DIAL DIRECTION DETECTOR
IC13 DELAY
IC14
IC15
IC16 DIRECTION DETECTOR
TP6
TP7
TP8
IC17, 18
U/D
CLK
UP/DOWN FG COUNT DATA
IC14, 15
6.1538kHz
IC31 INVERTER
Q11
H ON
(FRONT INTERFACE) P150-A4—P150-7
P150-7 CLUTCH
(FRONT INTERFACE) P150-A1—P150-1
P150-1 SERIAL IN
(FRONT INTERFACE) P150-A2—P150-3
P150-3 SERIAL OUT
(FRONT INTERFACE) P150-B2—P150-4
P150-4 DIAL STILL
(FRONT INTERFACE) P150-A3—P150-6
P150-6 Sϕ1
(FRONT INTERFACE) P150-B3—P150-5
P150-5 Sϕ0
J1-4 Sϕ0
J1-5 Sϕ1
J1-6 DIAL STILL
J1-1 CLUTCH

GRAM[FOR AU-665 NTSC]

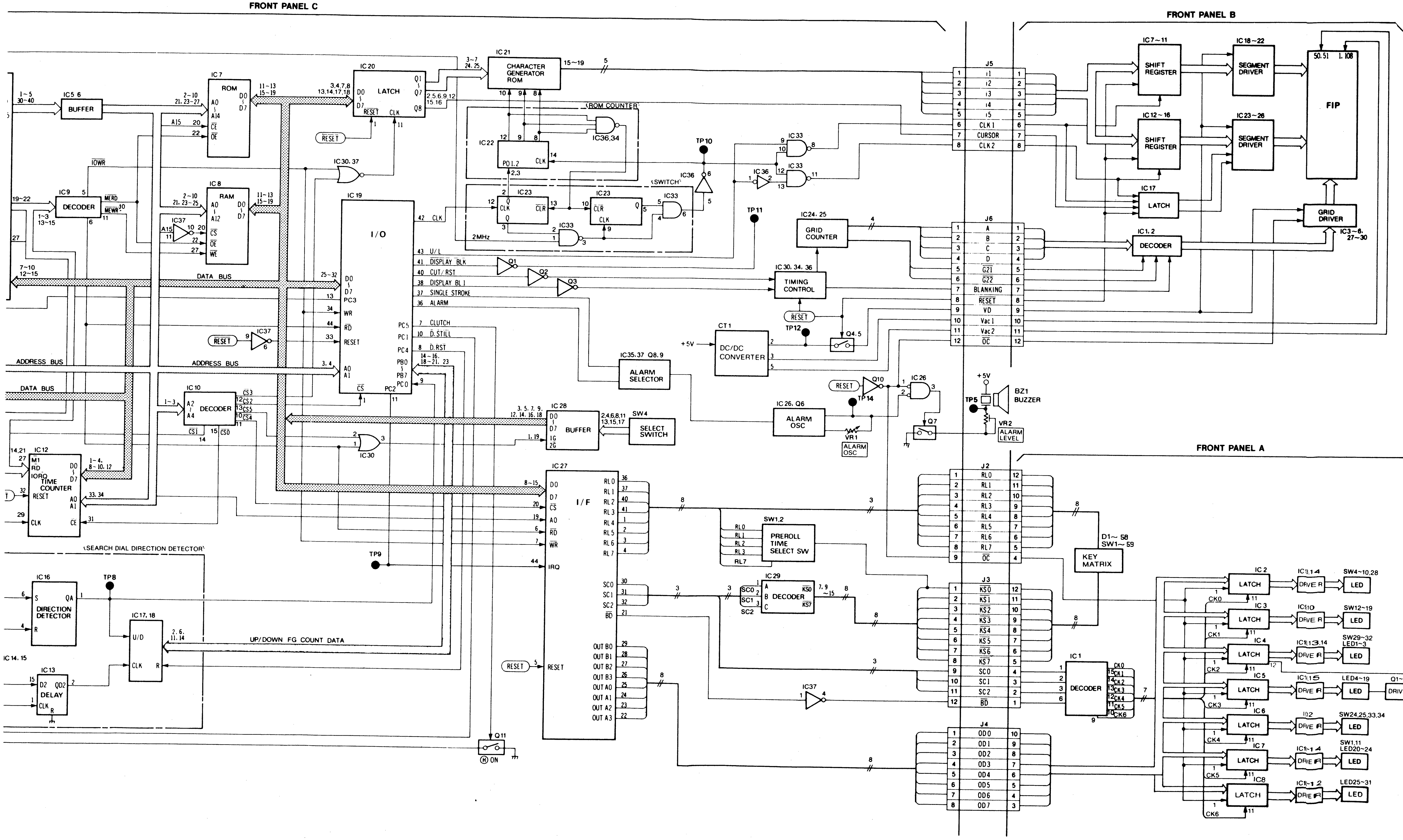
FRONT PANEL C
FRONT PANEL B
FRONT PANEL A
IC5 6
BUFFER
IC7
ROM
RAM
IC8
IC9
DECODER
IC37
IC20
LATCH
IC21
CHARACTER GENERATOR ROM
IC22
IC23
IC33
IC36,34
ROM COUNTER
SWITCH
TP10
TP11
TP12
TP14
TP5
TP8
TP9
IC30, 37
IC19
I/O
DATA BUS
ADDRESS BUS
RESET
IC10
DECODER
IC12
TIME COUNTER
IC16
DIRECTION DETECTOR
SEARCH DIAL DIRECTION DETECTOR
IC13
DELAY
IC17, 18
U/D
CLK
UP/DOWN FG COUNT DATA
IC14, 15
IC28
BUFFER
SW4
SELECT SWITCH
IC27
I/F
IC30
Q1
Q2
Q3
Q11
H ON
42 CLK
43 U/L
41 DISPLAY BLK
40 CUT/RST
38 DISPLAY BL1
37 SINGLE STROKE
36 ALARM
7 CLUTCH
10 D.STILL
8 D.RST
2MHz
IC24, 25
GRID COUNTER
IC30, 34, 36
TIMING CONTROL
IC35, 37 Q8, 9
ALARM SELECTOR
CT1
DC/DC CONVERTER
+5V
Q4, 5
IC26, Q6
ALARM OSC
VR1
ALARM OSC
IC26
Q10
Q7
BZ1
BUZZER
VR2
ALARM LEVEL
J5
I1
I2
I3
I4
I5
CLK1
CURSOR
CLK2
J6
A
B
C
D
G21
G22
BLANKING
RESET
VD
Vac1
Vac2
OC
IC7~11
SHIFT REGISTER
IC12~16
SHIFT REGISTER
IC18~22
SEGMENT DRIVER
IC23~26
SEGMENT DRIVER
IC17
LATCH
IC1, 2
DECODER
GRID DRIVER
IC3~6, 27~30
FIP
50.51
1.108
J2
RL0
RL1
RL2
RL3
RL4
RL5
RL6
RL7
SW1,2
PREROLL TIME SELECT SW
D1~58
SW1~59
KEY MATRIX
IC29
DECODER
SC0
SC1
SC2
KS0
KS7
J3
KS0
KS1
KS2
KS3
KS4
KS5
KS6
KS7
SC0
SC1
SC2
BD
IC1
DECODER
CK0
CK1
CK2
CK3
CK4
CK5
CK6
J4
OD0
OD1
OD2
OD3
OD4
OD5
OD6
OD7
OUT B0
OUT B1
OUT B2
OUT B3
OUT A0
OUT A1
OUT A2
OUT A3
IRQ
IC2
LATCH
IC3
IC4
IC5
IC6
IC7
IC8
DRIVER
LED
SW4~10,28
SW12~19
SW29~32
LED1~3
LED4~19
SW24,25,33,34
SW1,11
LED20~24
LED25~31

REVERSE SIDE FRONT PA
BLOCK D

FRONT PANEL A.B.C BLOCK DIAGRAM[FOR AU-65]

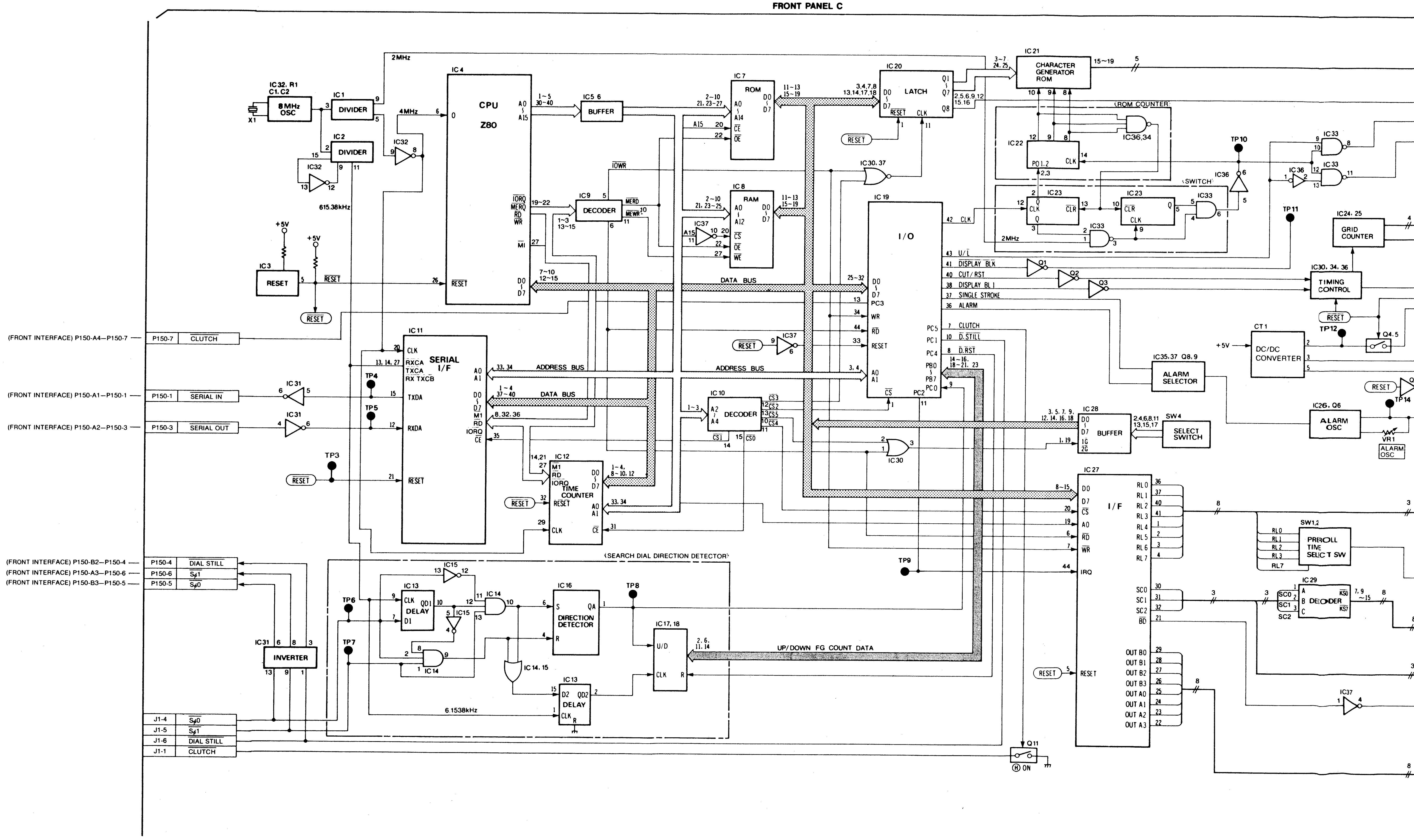
FRONT PANEL C
IC32, R1 C1, C2
8MHz OSC
X1
IC1 DIVIDER
IC2 DIVIDER
IC32
2MHz
4MHz
615.38kHz
IC4 CPU Z80
A0 ~ A15
IORQ MERQ RD WR
M1
RESET
D0 ~ D7
IC5 6 BUFFER
IC9 DECODER
MERD MEWR
IOWR
IC7 ROM
IC8 RAM
IC37
A15
CE OE CS WE
DATA BUS
ADDRESS BUS
IC20 LATCH
RESET CLK
IC21 CHARACTER GENERATOR ROM
ROM COUNTER
IC36,34
IC22
PO1.2 CLK
SWITCH
IC23
CLR
IC33
IC36
TP10
TP11
IC30, 37
IC19 I/O
U/L
DISPLAY BLK
CUT/RST
DISPLAY BL1
SINGLE STROKE
ALARM
CLUTCH
D.STILL
D.RST
Q1
Q2
Q3
2MHz
IC24, 25 GRID COUNTER
IC30, 34, 36 TIMING CONTROL
RESET
TP12
Q4.5
CT1 DC/DC CONVERTER
+5V
IC35,37 Q8,9 ALARM SELECTOR
IC26, Q6 ALARM OSC
VR1 ALARM OSC
TP14
IC3 RESET
+5V
IC11 SERIAL I/F
CLK RXCA TXCA RX TXCB TXDA RXDA RESET
A0 A1 D0 D7 M1 RD IORQ CE
TP4
TP5
TP3
IC31
IC10 DECODER
CS1 CS0 CS2 CS3 CS4 CS5
IC30
IC28 BUFFER
SW4 SELECT SWITCH
IC12 TIME COUNTER
IC27 I/F
RL0 RL1 RL2 RL3 RL4 RL5 RL6 RL7
SC0 SC1 SC2 BD
OUT B0 OUT B1 OUT B2 OUT B3 OUT A0 OUT A1 OUT A2 OUT A3
IRQ
TP9
SW1,2 PREROLL TIME SELECT SW
IC29 DECODER
IC37
(FRONT INTERFACE) P150-A4—P150-7
(FRONT INTERFACE) P150-A1—P150-1
(FRONT INTERFACE) P150-A2—P150-3
(FRONT INTERFACE) P150-B2—P150-4
(FRONT INTERFACE) P150-A3—P150-6
(FRONT INTERFACE) P150-B3—P150-5
P150-7 CLUTCH
P150-1 SERIAL IN
P150-3 SERIAL OUT
P150-4 DIAL STILL
P150-6 Sϕ1
P150-5 Sϕ0
IC31 INVERTER
J1-4 Sϕ0
J1-5 Sϕ1
J1-6 DIAL STILL
J1-1 CLUTCH
SEARCH DIAL DIRECTION DETECTOR
IC15
IC13 DELAY
IC14
IC16 DIRECTION DETECTOR
TP6
TP7
TP8
IC14, 15
IC13 DELAY
6.1538kHz
IC17, 18 U/D CLK R
UP/DOWN FG COUNT DATA
Q11
Ⓗ ON

OR AU-65]

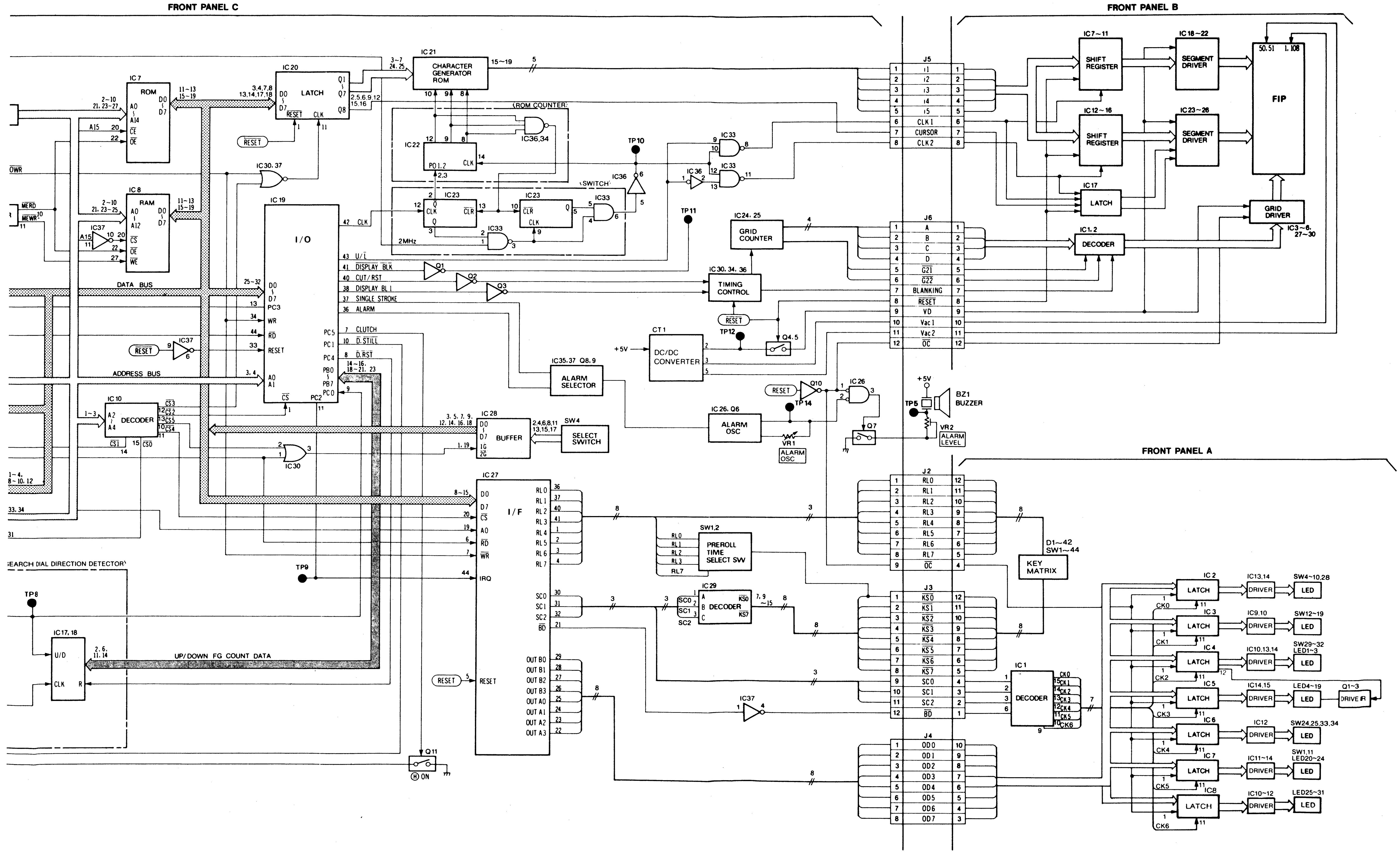

FRONT PANEL C
FRONT PANEL B
FRONT PANEL A
IC7 ROM
IC8 RAM
IC20 LATCH
IC21 CHARACTER GENERATOR ROM
IC22
ROM COUNTER
IC36,34
IC23
SWITCH
IC33
IC36
IC30, 37
IC19 I/O
DATA BUS
ADDRESS BUS
IC37
RESET
IC10 DECODER
IC30
IC28 BUFFER
SW4 SELECT SWITCH
IC35,37 Q8,9 ALARM SELECTOR
CT1 DC/DC CONVERTER
+5V
IC24, 25 GRID COUNTER
IC30, 34, 36 TIMING CONTROL
TP9
TP10
TP11
TP12
TP14
TP5
TP8
Q1
Q2
Q3
Q4,5
Q7
Q10
Q11
IC26
IC26, Q6 ALARM OSC
VR1 ALARM OSC
VR2 ALARM LEVEL
BZ1 BUZZER
U/L
DISPLAY BLK
CUT/RST
DISPLAY BL I
SINGLE STROKE
ALARM
CLUTCH
D.STILL
D.RST
2MHz
IC27 I/F
SW1,2 PREROLL TIME SELECT SW
IC29 DECODER
SEARCH DIAL DIRECTION DETECTOR
IC17, 18
UP/DOWN FG COUNT DATA
U/D
CLK
Ⓗ ON
J5
J6
J2
J3
J4
IC7~11 SHIFT REGISTER
IC12~16 SHIFT REGISTER
IC18~22 SEGMENT DRIVER
IC23~26 SEGMENT DRIVER
FIP
IC17 LATCH
IC1, 2 DECODER
GRID DRIVER
IC3~6, 27~30
KEY MATRIX
D1~42 SW1~44
IC1 DECODER
IC2 LATCH
IC3 LATCH
IC4 LATCH
IC5 LATCH
IC6 LATCH
IC7 LATCH
IC8 LATCH
IC13,14 DRIVER
IC9,10 DRIVER
IC10,13,14 DRIVER
IC14,15 DRIVER
IC12 DRIVER
IC11~14 DRIVER
IC10~12 DRIVER
SW4~10,28 LED
SW12~19 LED
SW29~32 LED1~3 LED
LED4~19 LED
Q1~3 DRIVER
SW24,25,33,34 LED
SW1,11 LED20~24 LED
LED25~31 LED
CK0
CK1
CK2
CK3
CK4
CK5
CK6

FRONT PANEL A.C BLOCK DIAGRAM[FOR AU-63,AU-62]

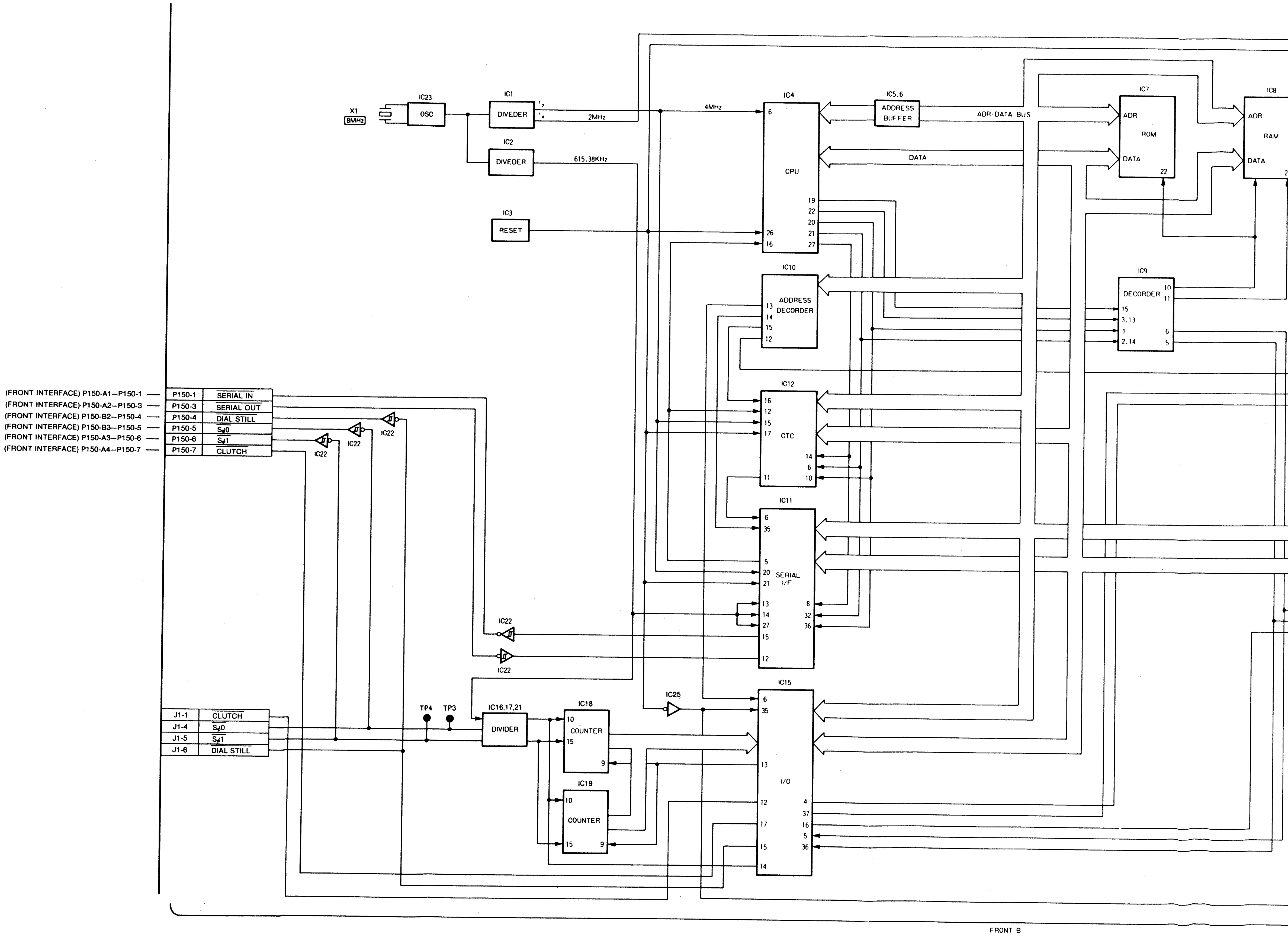
X1
8MHz
IC23
OSC
IC1
DIVEDER
1/2
1/4
2MHz
IC2
DIVEDER
615.38KHz
IC3
RESET
4MHz
IC4
CPU
6
19
22
20
21
27
26
16
IC5.6
ADDRESS
BUFFER
ADR DATA BUS
DATA
IC7
ADR
ROM
DATA
22
IC8
ADR
RAM
DATA
IC10
ADDRESS
DECORDER
13
14
15
12
IC9
DECORDER
10
11
15
3.13
1
2.14
6
5
IC12
CTC
16
12
15
17
14
6
10
11
IC11
SERIAL
I/F
6
35
5
20
21
13
14
27
15
12
8
32
36
(FRONT INTERFACE) P150-A1—P150-1
(FRONT INTERFACE) P150-A2—P150-3
(FRONT INTERFACE) P150-B2—P150-4
(FRONT INTERFACE) P150-B3—P150-5
(FRONT INTERFACE) P150-A3—P150-6
(FRONT INTERFACE) P150-A4—P150-7
P150-1 SERIAL IN
P150-3 SERIAL OUT
P150-4 DIAL STILL
P150-5 Sϕ0
P150-6 Sϕ1
P150-7 CLUTCH
IC22
IC22
IC22
IC22
IC22
J1-1 CLUTCH
J1-4 Sϕ0
J1-5 Sϕ1
J1-6 DIAL STILL
TP4
TP3
IC16,17,21
DIVIDER
IC18
10
COUNTER
15
9
IC19
10
COUNTER
15
9
IC25
IC15
6
35
13
I/O
12
17
15
14
4
37
16
5
36
FRONT B

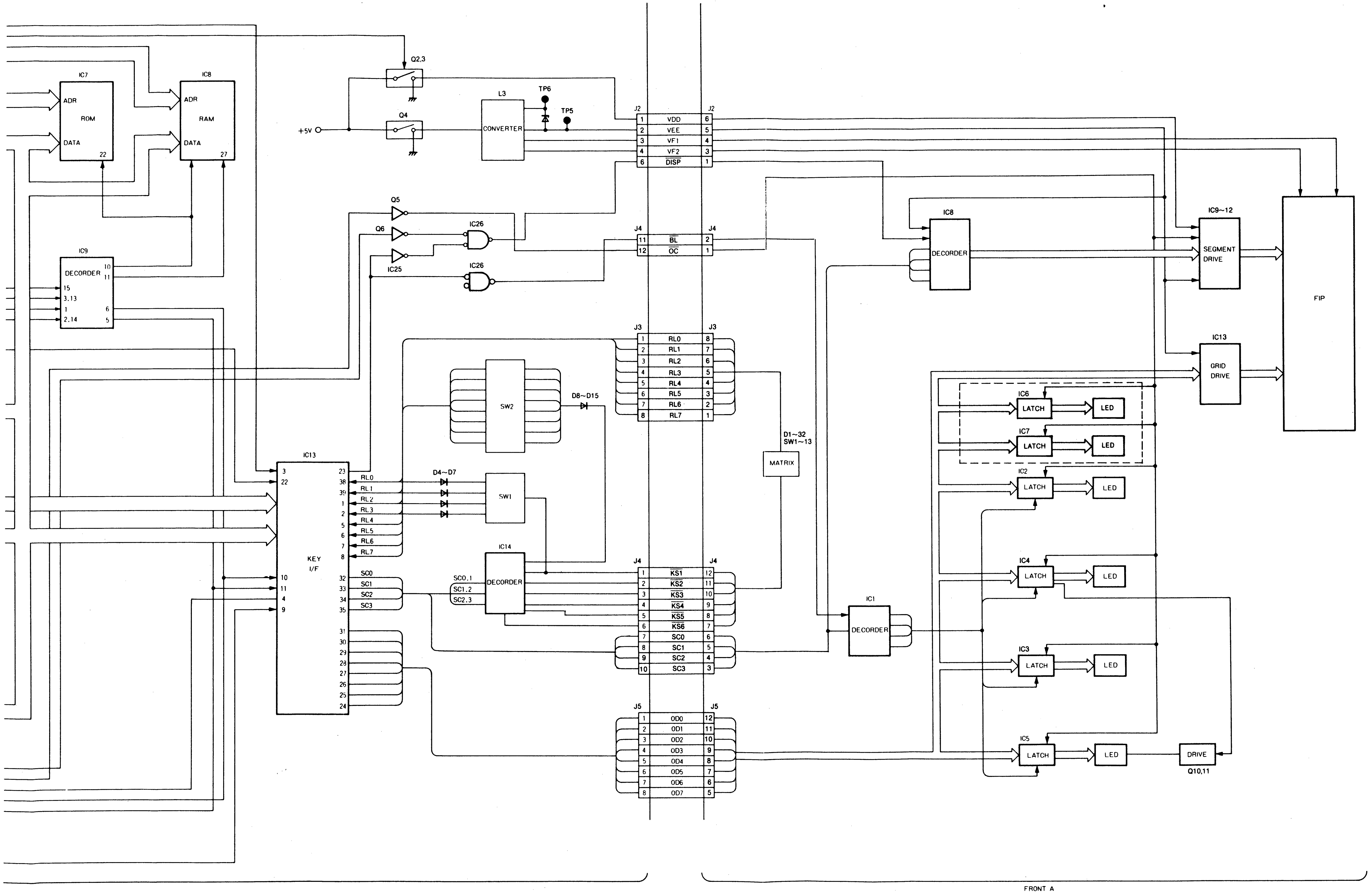

IC7
ADR
ROM
DATA
22
IC8
ADR
RAM
DATA
27
IC9
DECORDER
10
11
15
3,13
1
2,14
6
5
Q2,3
Q4
+5V
L3
CONVERTER
TP6
TP5
J2
1 VDD 6
2 VEE 5
3 VF1 4
4 VF2 3
6 DISP 1
Q5
Q6
IC25
IC26
IC26
J4
11 BL 2
12 OC 1
IC8
DECORDER
IC9~12
SEGMENT DRIVE
FIP
IC13
GRID DRIVE
J3
1 RL0 8
2 RL1 7
3 RL2 6
4 RL3 5
5 RL4 4
6 RL5 3
7 RL6 2
8 RL7 1
SW2
D8~D15
D1~32
SW1~13
MATRIX
IC6
LATCH
LED
IC7
LATCH
LED
IC2
LATCH
LED
IC13
KEY I/F
3
22
23
38
39
1
2
5
6
7
8
RL0
RL1
RL2
RL3
RL4
RL5
RL6
RL7
D4~D7
SW1
IC14
DECORDER
SC0.1
SC1.2
SC2.3
10
11
4
9
32
33
34
35
SC0
SC1
SC2
SC3
31
30
29
28
27
26
25
24
J4
1 KS1 12
2 KS2 11
3 KS3 10
4 KS4 9
5 KS5 8
6 KS6 7
7 SC0 6
8 SC1 5
9 SC2 4
10 SC3 3
IC1
DECORDER
IC4
LATCH
LED
IC3
LATCH
LED
IC5
LATCH
LED
DRIVE
Q10,11
J5
1 OD0 12
2 OD1 11
3 OD2 10
4 OD3 9
5 OD4 8
6 OD5 7
7 OD6 6
8 OD7 5
FRONT A

FRONT SW & VR BLOCK DIAGRA

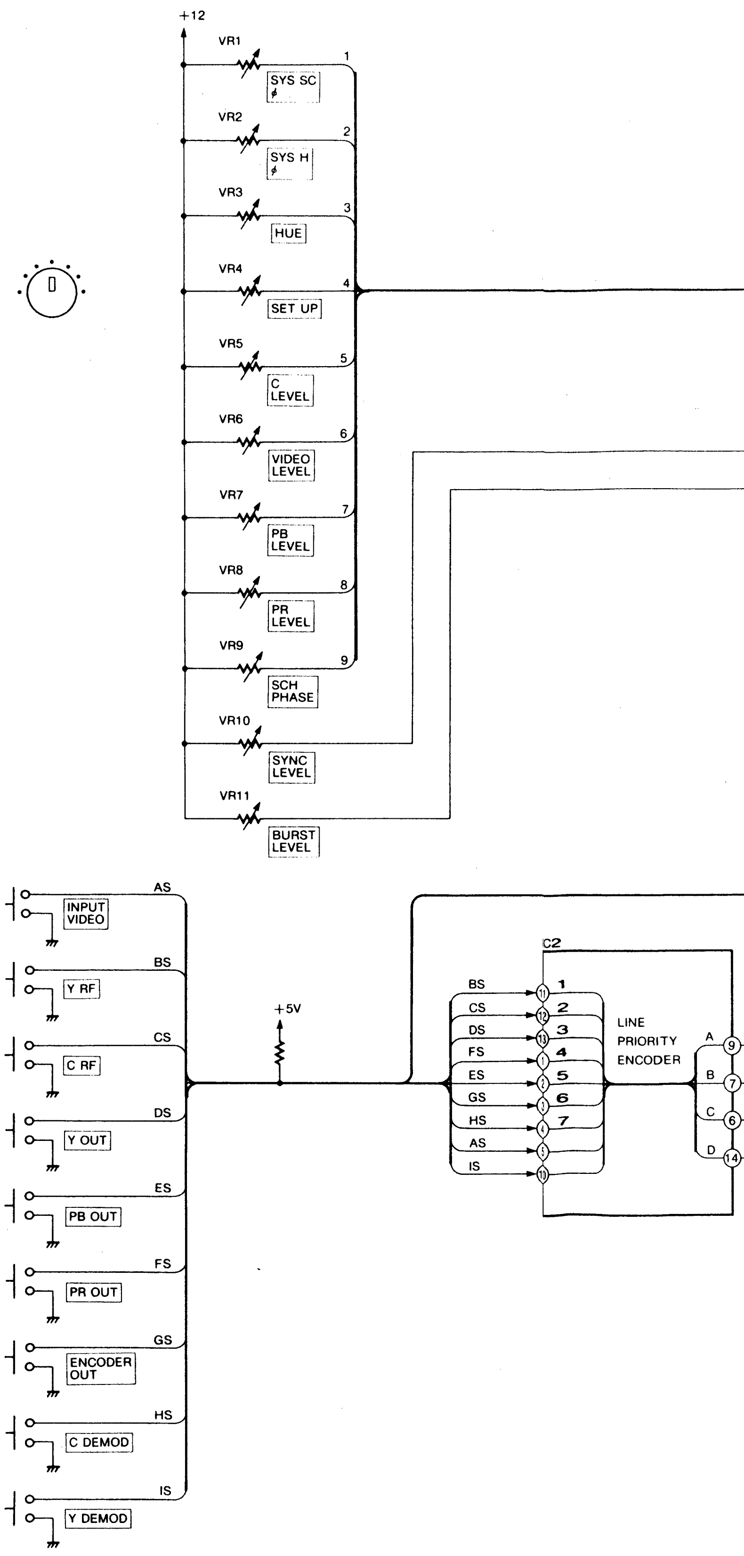
+12
VR1
SYS SC φ
1
VR2
SYS H φ
2
VR3
HUE
3
VR4
SET UP
4
VR5
C LEVEL
5
VR6
VIDEO LEVEL
6
VR7
PB LEVEL
7
VR8
PR LEVEL
8
VR9
SCH PHASE
9
VR10
SYNC LEVEL
VR11
BURST LEVEL
SW1
INPUT VIDEO
AS
SW2
Y RF
BS
SW3
C RF
CS
SW4
Y OUT
DS
SW5
PB OUT
ES
SW6
PR OUT
FS
SW7
ENCODER OUT
GS
SW8
C DEMOD
HS
SW9
Y DEMOD
IS
+5V
C2
BS
CS
DS
FS
ES
GS
HS
AS
IS
1
2
3
4
5
6
7
LINE PRIORITY ENCODER
A
B
C
D
9
7
6
14

K DIAGRAM[FOR AU-665]

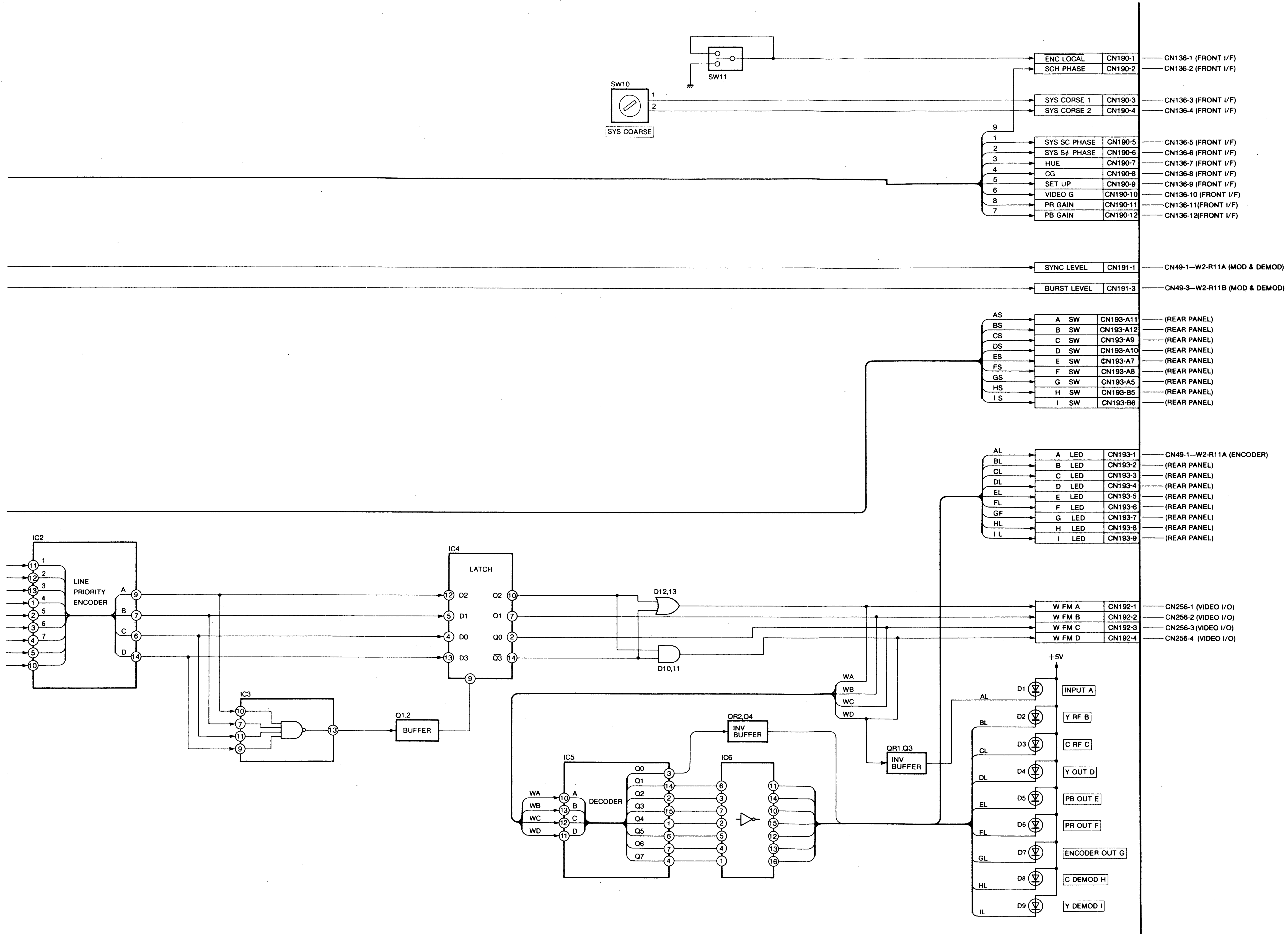

SW11
SW10
1
2
SYS COARSE
ENC LOCAL
CN190-1
CN136-1 (FRONT I/F)
SCH PHASE
CN190-2
CN136-2 (FRONT I/F)
SYS CORSE 1
CN190-3
CN136-3 (FRONT I/F)
SYS CORSE 2
CN190-4
CN136-4 (FRONT I/F)
9
1
2
3
4
5
6
8
7
SYS SC PHASE
CN190-5
CN136-5 (FRONT I/F)
SYS Sϕ PHASE
CN190-6
CN136-6 (FRONT I/F)
HUE
CN190-7
CN136-7 (FRONT I/F)
CG
CN190-8
CN136-8 (FRONT I/F)
SET UP
CN190-9
CN136-9 (FRONT I/F)
VIDEO G
CN190-10
CN136-10 (FRONT I/F)
PR GAIN
CN190-11
CN136-11(FRONT I/F)
PB GAIN
CN190-12
CN136-12(FRONT I/F)
SYNC LEVEL
CN191-1
CN49-1—W2-R11A (MOD & DEMOD)
BURST LEVEL
CN191-3
CN49-3—W2-R11B (MOD & DEMOD)
AS
BS
CS
DS
ES
FS
GS
HS
I S
A SW
CN193-A11
B SW
CN193-A12
C SW
CN193-A9
D SW
CN193-A10
E SW
CN193-A7
F SW
CN193-A8
G SW
CN193-A5
H SW
CN193-B5
I SW
CN193-B6
(REAR PANEL)
AL
BL
CL
DL
EL
FL
GF
HL
I L
A LED
CN193-1
CN49-1—W2-R11A (ENCODER)
B LED
CN193-2
C LED
CN193-3
D LED
CN193-4
E LED
CN193-5
F LED
CN193-6
G LED
CN193-7
H LED
CN193-8
I LED
CN193-9
(REAR PANEL)
IC2
LINE PRIORITY ENCODER
A
B
C
D
IC4
LATCH
D2
D1
D0
D3
Q2
Q1
Q0
Q̄3
D12,13
D10,11
W FM A
CN192-1
CN256-1 (VIDEO I/O)
W FM B
CN192-2
CN256-2 (VIDEO I/O)
W FM C
CN192-3
CN256-3 (VIDEO I/O)
W FM D
CN192-4
CN256-4 (VIDEO I/O)
+5V
IC3
Q1,2
BUFFER
WA
WB
WC
WD
QR2,Q4
INV BUFFER
QR1,Q3
INV BUFFER
IC5
DECODER
Q0
Q1
Q2
Q3
Q4
Q5
Q6
Q7
IC6
D1
INPUT A
D2
Y RF B
D3
C RF C
D4
Y OUT D
D5
PB OUT E
D6
PR OUT F
D7
ENCODER OUT G
D8
C DEMOD H
D9
Y DEMOD I

RA & HA BLOCK DIAGRAM

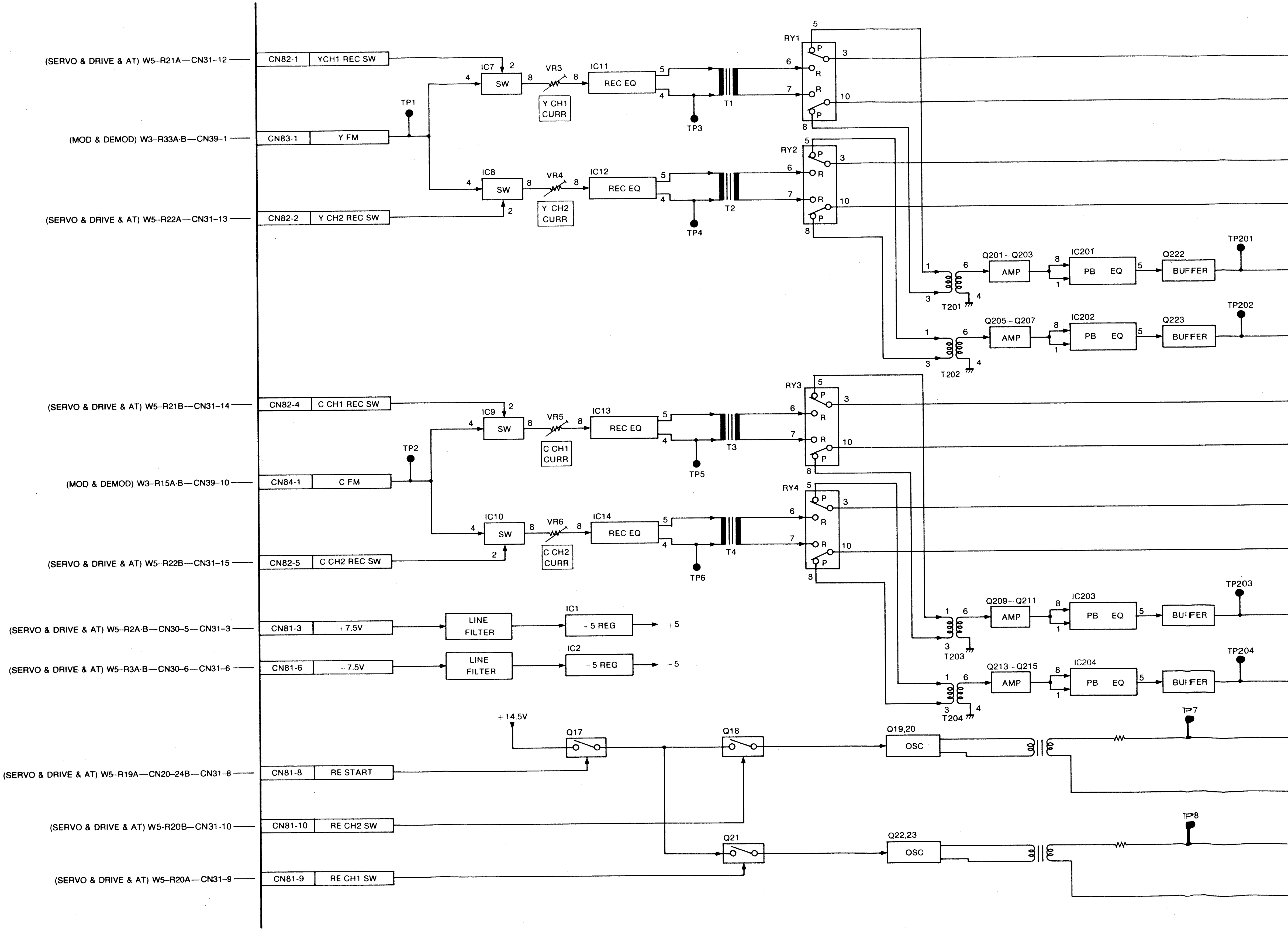

(SERVO & DRIVE & AT) W5-R21A—CN31-12
CN82-1
YCH1 REC SW
(MOD & DEMOD) W3-R33A·B—CN39-1
CN83-1
Y FM
(SERVO & DRIVE & AT) W5-R22A—CN31-13
CN82-2
Y CH2 REC SW
(SERVO & DRIVE & AT) W5-R21B—CN31-14
CN82-4
C CH1 REC SW
(MOD & DEMOD) W3-R15A·B—CN39-10
CN84-1
C FM
(SERVO & DRIVE & AT) W5-R22B—CN31-15
CN82-5
C CH2 REC SW
(SERVO & DRIVE & AT) W5-R2A·B—CN30-5—CN31-3
CN81-3
+7.5V
(SERVO & DRIVE & AT) W5-R3A·B—CN30-6—CN31-6
CN81-6
−7.5V
(SERVO & DRIVE & AT) W5-R19A—CN20-24B—CN31-8
CN81-8
RE START
(SERVO & DRIVE & AT) W5-R20B—CN31-10
CN81-10
RE CH2 SW
(SERVO & DRIVE & AT) W5-R20A—CN31-9
CN81-9
RE CH1 SW
TP1
TP2
IC7
SW
IC8
SW
IC9
SW
IC10
SW
VR3
Y CH1 CURR
VR4
Y CH2 CURR
VR5
C CH1 CURR
VR6
C CH2 CURR
IC11
REC EQ
IC12
REC EQ
IC13
REC EQ
IC14
REC EQ
TP3
TP4
TP5
TP6
T1
T2
T3
T4
RY1
RY2
RY3
RY4
P
R
T201
T202
T203
T204
Q201~Q203
AMP
Q205~Q207
AMP
Q209~Q211
AMP
Q213~Q215
AMP
IC201
PB EQ
IC202
PB EQ
IC203
PB EQ
IC204
PB EQ
Q222
BUFFER
Q223
BUFFER
BUFFER
BUFFER
TP201
TP202
TP203
TP204
LINE FILTER
LINE FILTER
IC1
+5 REG
+5
IC2
−5 REG
−5
+14.5V
Q17
Q18
Q21
Q19,20
OSC
Q22,23
OSC
TP7
TP8

RA & HA BLOCK DIAGRAM

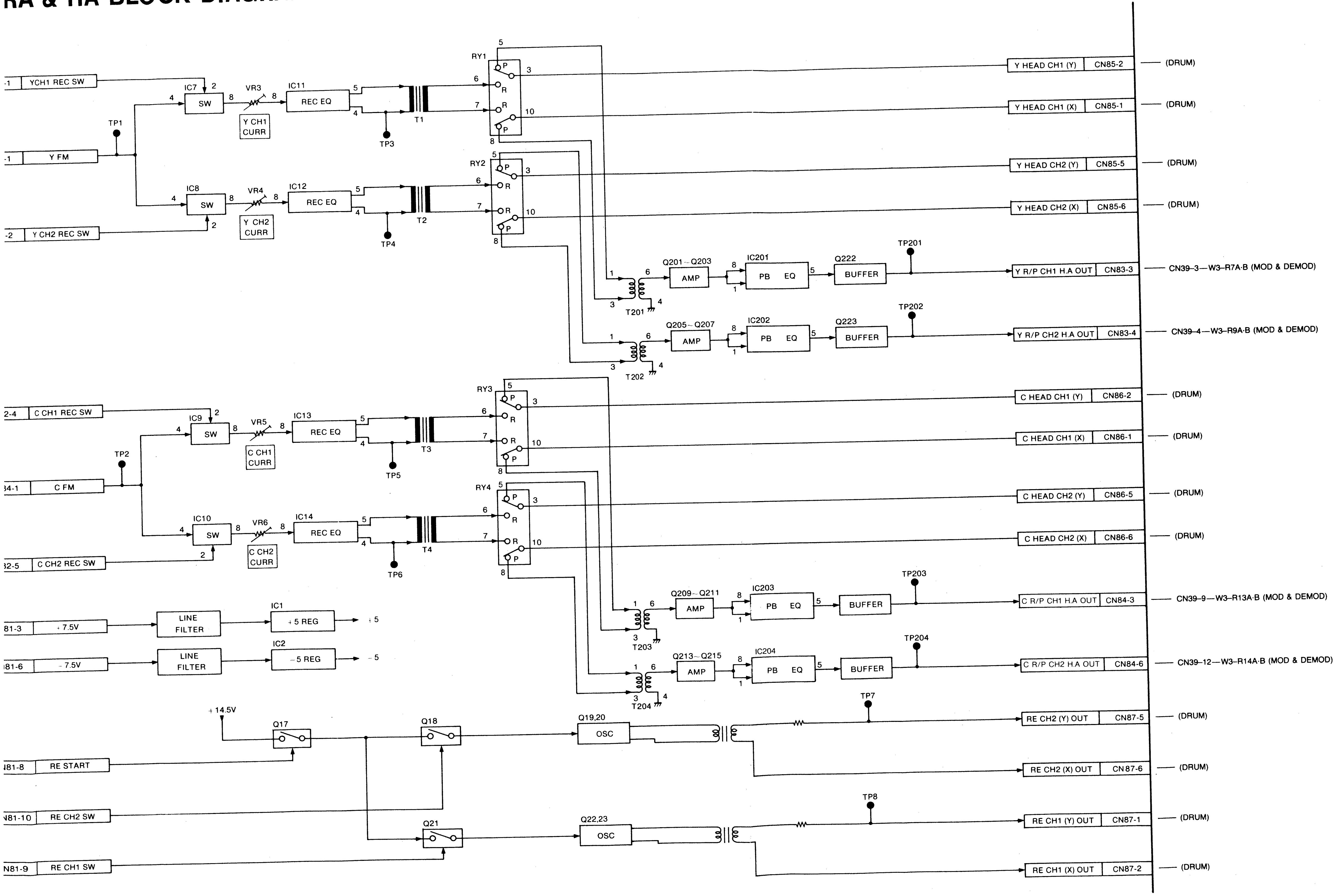
YCH1 REC SW
Y FM
Y CH2 REC SW
TP1
IC7
SW
VR3
Y CH1 CURR
IC11
REC EQ
T1
TP3
RY1
IC8
SW
VR4
Y CH2 CURR
IC12
REC EQ
T2
TP4
RY2
Y HEAD CH1 (Y) CN85-2 (DRUM)
Y HEAD CH1 (X) CN85-1 (DRUM)
Y HEAD CH2 (Y) CN85-5 (DRUM)
Y HEAD CH2 (X) CN85-6 (DRUM)
TP201
Q201~Q203
AMP
IC201
PB EQ
Q222
BUFFER
T201
Y R/P CH1 H.A OUT CN83-3
CN39-3—W3-R7A·B (MOD & DEMOD)
TP202
Q205~Q207
AMP
IC202
PB EQ
Q223
BUFFER
T202
Y R/P CH2 H.A OUT CN83-4
CN39-4—W3-R9A·B (MOD & DEMOD)
C CH1 REC SW
C FM
C CH2 REC SW
TP2
IC9
SW
VR5
C CH1 CURR
IC13
REC EQ
T3
TP5
RY3
IC10
SW
VR6
C CH2 CURR
IC14
REC EQ
T4
TP6
RY4
C HEAD CH1 (Y) CN86-2 (DRUM)
C HEAD CH1 (X) CN86-1 (DRUM)
C HEAD CH2 (Y) CN86-5 (DRUM)
C HEAD CH2 (X) CN86-6 (DRUM)
TP203
Q209~Q211
AMP
IC203
PB EQ
BUFFER
T203
C R/P CH1 H.A OUT CN84-3
CN39-9—W3-R13A·B (MOD & DEMOD)
TP204
Q213~Q215
AMP
IC204
PB EQ
BUFFER
T204
C R/P CH2 H.A OUT CN84-6
CN39-12—W3-R14A·B (MOD & DEMOD)
+7.5V
LINE FILTER
IC1
+5 REG
+5
−7.5V
LINE FILTER
IC2
−5 REG
−5
+14.5V
Q17
Q18
Q19,20
OSC
TP7
RE START
RE CH2 SW
RE CH1 SW
Q21
Q22,23
OSC
TP8
RE CH2 (Y) OUT CN87-5 (DRUM)
RE CH2 (X) OUT CN87-6 (DRUM)
RE CH1 (Y) OUT CN87-1 (DRUM)
RE CH1 (X) OUT CN87-2 (DRUM)

VIDEO I/O BLOCK DIAGRAM 1/2[FOR AU-665]

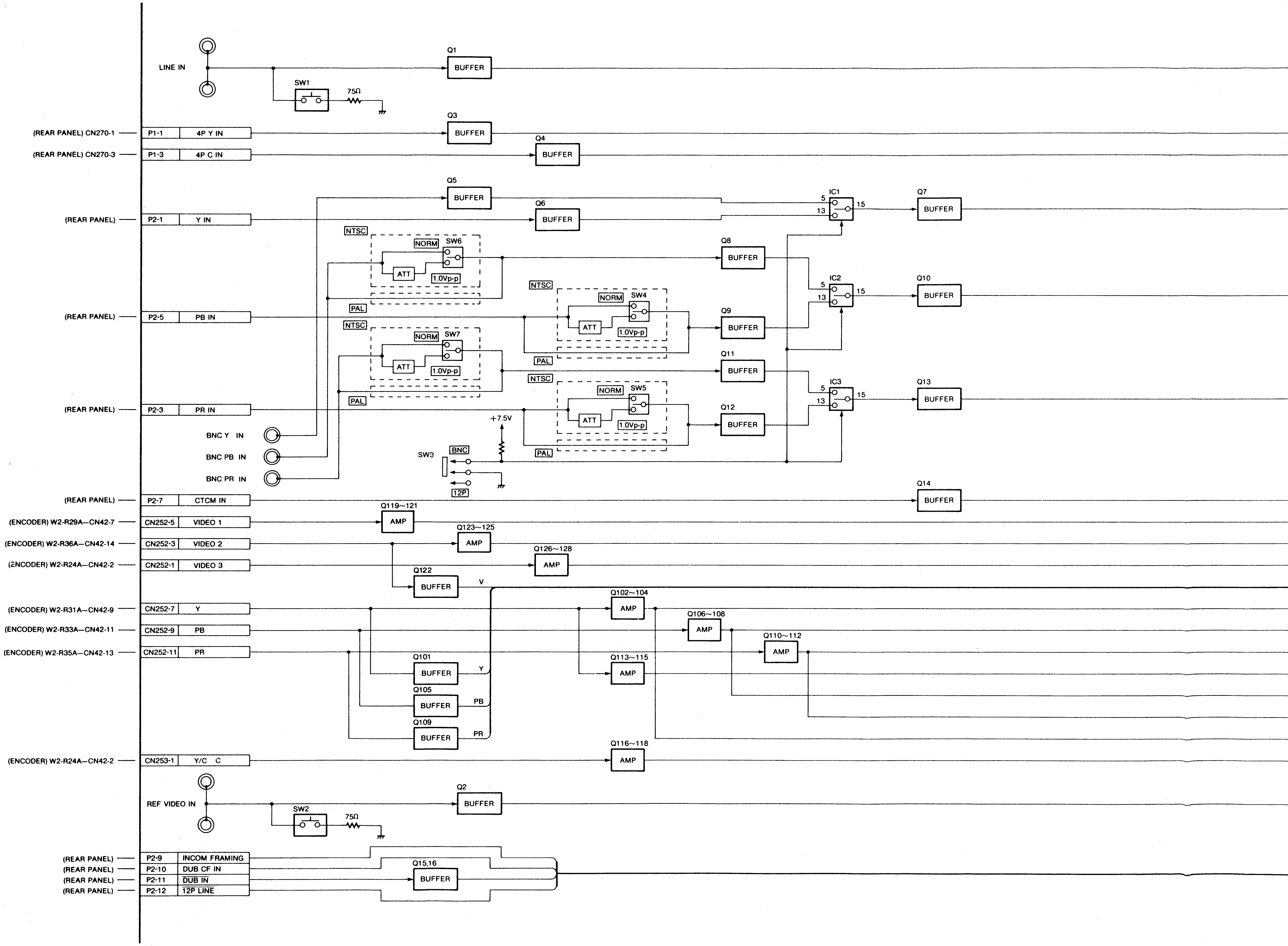

LINE IN
SW1
75Ω
Q1
BUFFER
(REAR PANEL) CN270-1
P1-1
4P Y IN
Q3
BUFFER
(REAR PANEL) CN270-3
P1-3
4P C IN
Q4
BUFFER
Q5
BUFFER
(REAR PANEL)
P2-1
Y IN
Q6
BUFFER
IC1
5
13
15
Q7
BUFFER
NTSC
NORM
SW6
ATT
1.0Vp-p
PAL
Q8
BUFFER
IC2
5
13
15
Q10
BUFFER
NTSC
NORM
SW4
ATT
1.0Vp-p
PAL
(REAR PANEL)
P2-5
PB IN
Q9
BUFFER
NTSC
NORM
SW7
ATT
1.0Vp-p
PAL
Q11
BUFFER
NTSC
NORM
SW5
ATT
1.0Vp-p
PAL
IC3
5
13
15
Q13
BUFFER
(REAR PANEL)
P2-3
PR IN
Q12
BUFFER
+7.5V
BNC Y IN
BNC PB IN
BNC PR IN
SW3
BNC
12P
Q14
BUFFER
(REAR PANEL)
P2-7
CTCM IN
Q119~121
AMP
(ENCODER) W2-R29A—CN42-7
CN252-5
VIDEO 1
Q123~125
AMP
(ENCODER) W2-R36A—CN42-14
CN252-3
VIDEO 2
Q126~128
AMP
(ENCODER) W2-R24A—CN42-2
CN252-1
VIDEO 3
Q122
BUFFER
V
Q102~104
AMP
(ENCODER) W2-R31A—CN42-9
CN252-7
Y
Q106~108
AMP
(ENCODER) W2-R33A—CN42-11
CN252-9
PB
Q110~112
AMP
(ENCODER) W2-R35A—CN42-13
CN252-11
PR
Q101
BUFFER
Y
Q113~115
AMP
Q105
BUFFER
PB
Q109
BUFFER
PR
Q116~118
AMP
(ENCODER) W2-R24A—CN42-2
CN253-1
Y/C C
REF VIDEO IN
Q2
BUFFER
SW2
75Ω
(REAR PANEL)
P2-9
INCOM FRAMING
(REAR PANEL)
P2-10
DUB CF IN
Q15,16
BUFFER
(REAR PANEL)
P2-11
DUB IN
(REAR PANEL)
P2-12
12P LINE

CK DIAGRAM 1/2 [FOR AU-665]

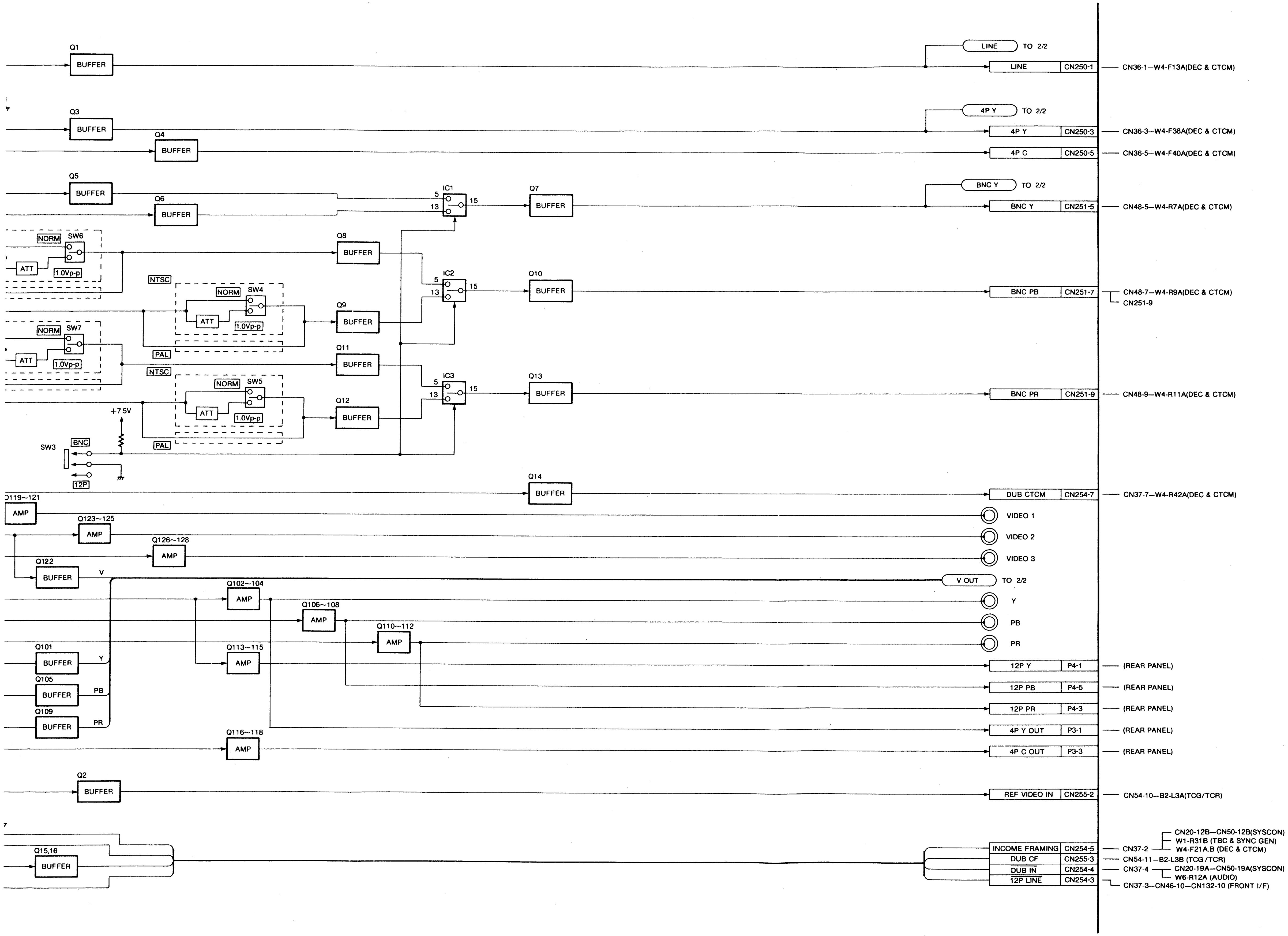
Q1
BUFFER
LINE
TO 2/2
LINE
CN250-1
CN36-1—W4-F13A(DEC & CTCM)
Q3
BUFFER
Q4
BUFFER
4P Y
TO 2/2
4P Y
CN250-3
CN36-3—W4-F38A(DEC & CTCM)
4P C
CN250-5
CN36-5—W4-F40A(DEC & CTCM)
Q5
BUFFER
Q6
BUFFER
IC1
5
13
15
Q7
BUFFER
BNC Y
TO 2/2
BNC Y
CN251-5
CN48-5—W4-R7A(DEC & CTCM)
NORM
SW6
ATT
1.0Vp-p
Q8
BUFFER
IC2
5
13
15
Q10
BUFFER
BNC PB
CN251-7
CN48-7—W4-R9A(DEC & CTCM)
CN251-9
NTSC
NORM
SW4
ATT
1.0Vp-p
Q9
BUFFER
NORM
SW7
ATT
1.0Vp-p
PAL
Q11
BUFFER
NTSC
NORM
SW5
IC3
5
13
15
Q13
BUFFER
BNC PR
CN251-9
CN48-9—W4-R11A(DEC & CTCM)
ATT
1.0Vp-p
Q12
BUFFER
+7.5V
SW3
BNC
PAL
12P
Q14
BUFFER
DUB CTCM
CN254-7
CN37-7—W4-R42A(DEC & CTCM)
Q119~121
AMP
VIDEO 1
Q123~125
AMP
VIDEO 2
Q126~128
AMP
VIDEO 3
Q122
BUFFER
V
V OUT
TO 2/2
Q102~104
AMP
Y
Q106~108
AMP
PB
Q110~112
AMP
PR
Q101
BUFFER
Y
Q113~115
AMP
12P Y
P4-1
(REAR PANEL)
Q105
BUFFER
PB
12P PB
P4-5
(REAR PANEL)
Q109
BUFFER
PR
12P PR
P4-3
(REAR PANEL)
4P Y OUT
P3-1
(REAR PANEL)
Q116~118
AMP
4P C OUT
P3-3
(REAR PANEL)
Q2
BUFFER
REF VIDEO IN
CN255-2
CN54-10—B2-L3A(TCG/TCR)
Q15,16
BUFFER
INCOME FRAMING
CN254-5
DUB CF
CN255-3
DUB IN
CN254-4
12P LINE
CN254-3
CN20-12B—CN50-12B(SYSCON)
W1-R31B (TBC & SYNC GEN)
CN37-2
W4-F21A.B (DEC & CTCM)
CN54-11—B2-L3B (TCG/TCR)
CN37-4
CN20-19A—CN50-19A(SYSCON)
W6-R12A (AUDIO)
CN37-3—CN46-10—CN132-10 (FRONT I/F)

VIDEO I/O BLOCK DIAGRAM 2/2[FOR AU-665]

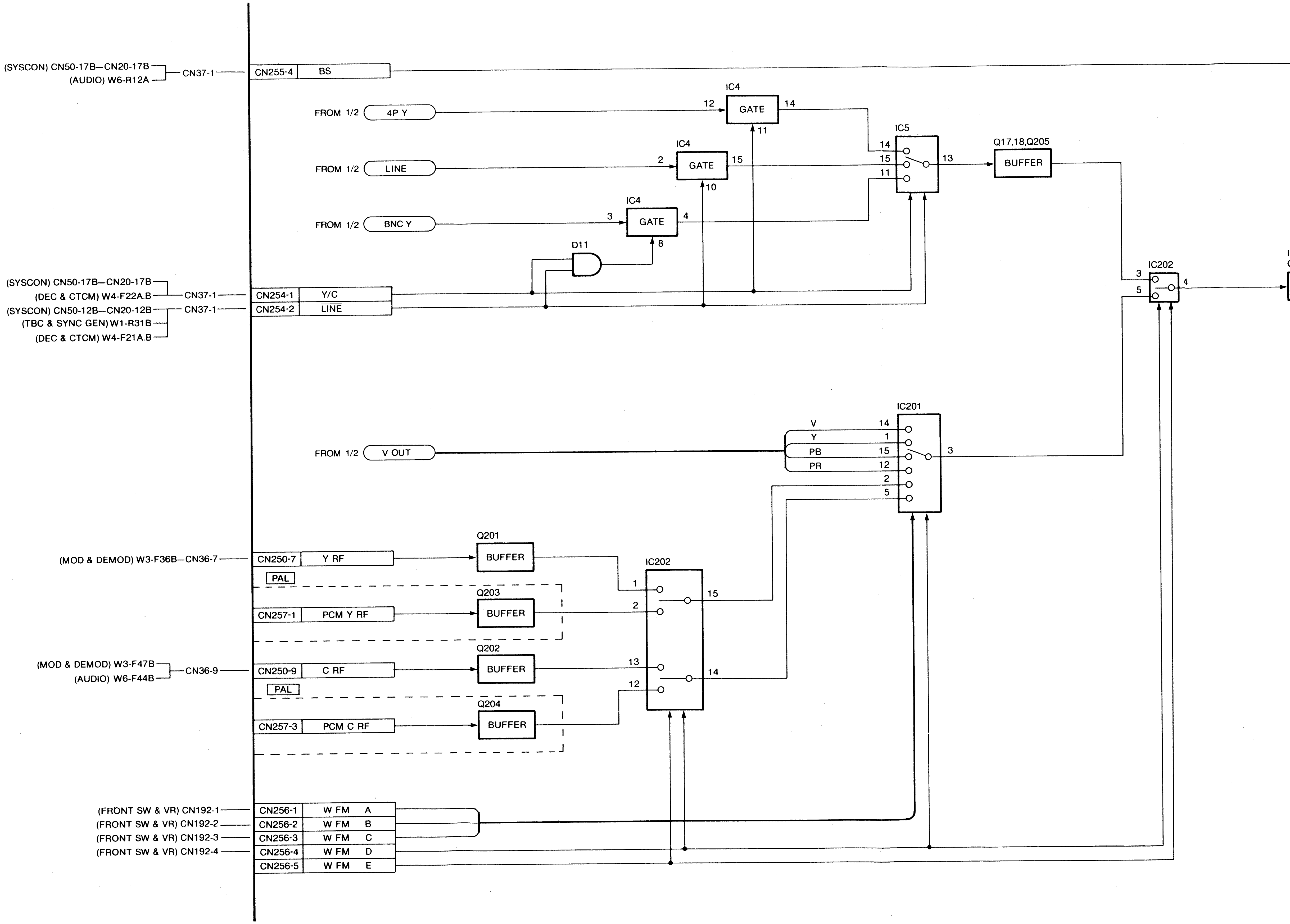
(SYSCON) CN50-17B—CN20-17B
(AUDIO) W6-R12A
CN37-1
CN255-4
BS
FROM 1/2
4P Y
FROM 1/2
LINE
FROM 1/2
BNC Y
IC4
GATE
12
14
11
IC4
GATE
2
15
10
IC4
GATE
3
4
8
D11
IC5
14
15
11
13
Q17,18,Q205
BUFFER
(SYSCON) CN50-17B—CN20-17B
(DEC & CTCM) W4-F22A.B
CN37-1
(SYSCON) CN50-12B—CN20-12B
(TBC & SYNC GEN) W1-R31B
(DEC & CTCM) W4-F21A.B
CN37-1
CN254-1
Y/C
CN254-2
LINE
IC202
3
5
4
IC201
V
Y
PB
PR
14
1
15
12
2
5
3
FROM 1/2
V OUT
(MOD & DEMOD) W3-F36B—CN36-7
CN250-7
Y RF
Q201
BUFFER
PAL
Q203
CN257-1
PCM Y RF
BUFFER
IC202
1
2
15
13
12
14
(MOD & DEMOD) W3-F47B
(AUDIO) W6-F44B
CN36-9
Q202
CN250-9
C RF
BUFFER
PAL
Q204
CN257-3
PCM C RF
BUFFER
(FRONT SW & VR) CN192-1
(FRONT SW & VR) CN192-2
(FRONT SW & VR) CN192-3
(FRONT SW & VR) CN192-4
CN256-1
W FM A
CN256-2
W FM B
CN256-3
W FM C
CN256-4
W FM D
CN256-5
W FM E

)EO I/O BLOCK DIAGRAM 2/2[FOR AU-665]

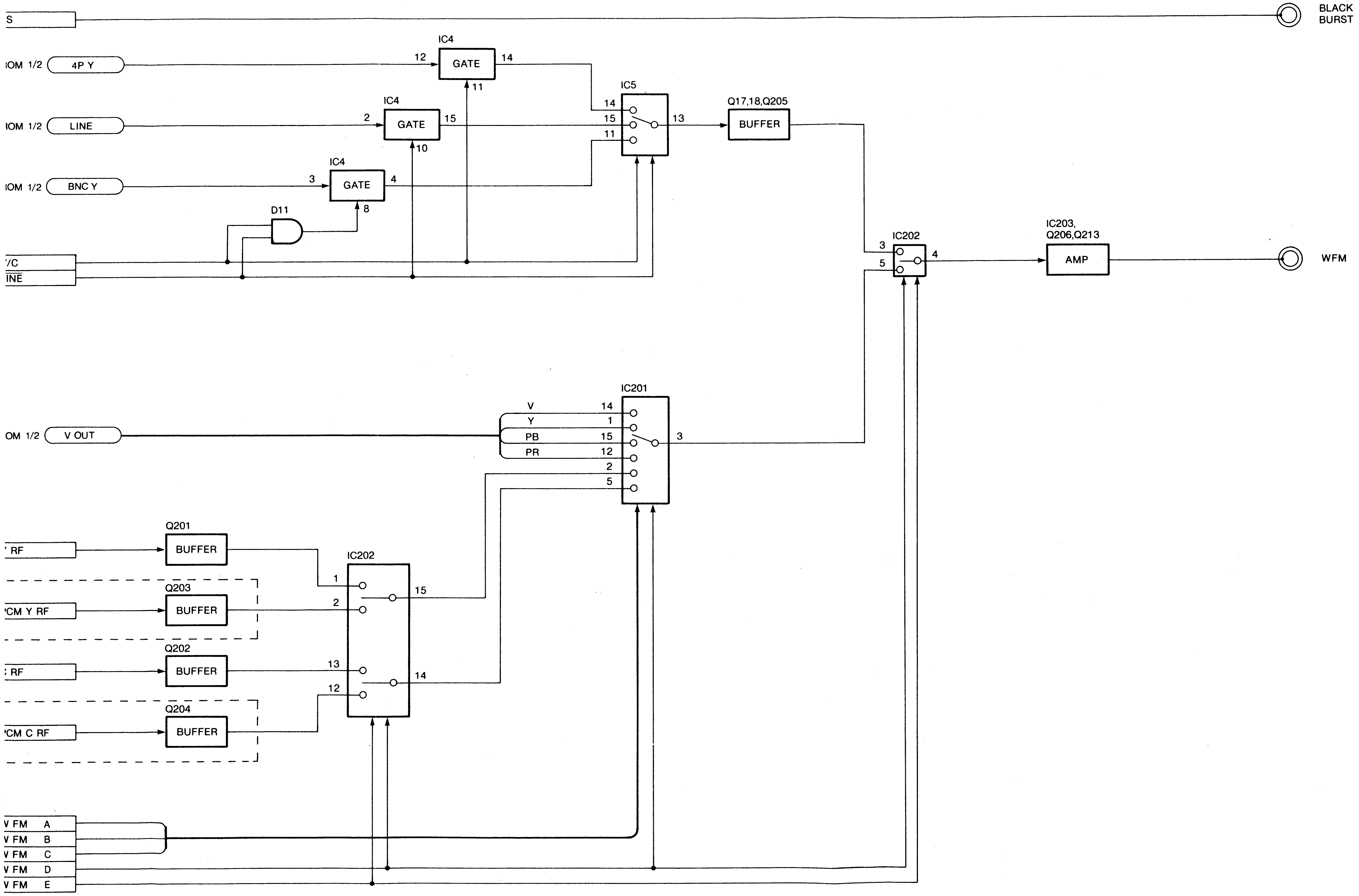
S
BLACK BURST
IC4
IOM 1/2
4P Y
12
GATE
14
11
IC5
14
15
11
13
Q17,18,Q205
BUFFER
IC4
IOM 1/2
LINE
2
GATE
15
10
IC4
IOM 1/2
BNC Y
3
GATE
4
8
D11
/C
INE
IC202
3
5
4
IC203,
Q206,Q213
AMP
WFM
IC201
OM 1/2
V OUT
V
Y
PB
PR
14
1
15
12
2
5
3
Q201
RF
BUFFER
IC202
1
2
15
Q203
CM Y RF
BUFFER
Q202
RF
BUFFER
13
12
14
Q204
CM C RF
BUFFER
V FM A
V FM B
V FM C
V FM D
V FM E

VIDEO I/O BLOCK DIAGRAM 1/2[FOR AU-65,AU-63,AU-62]

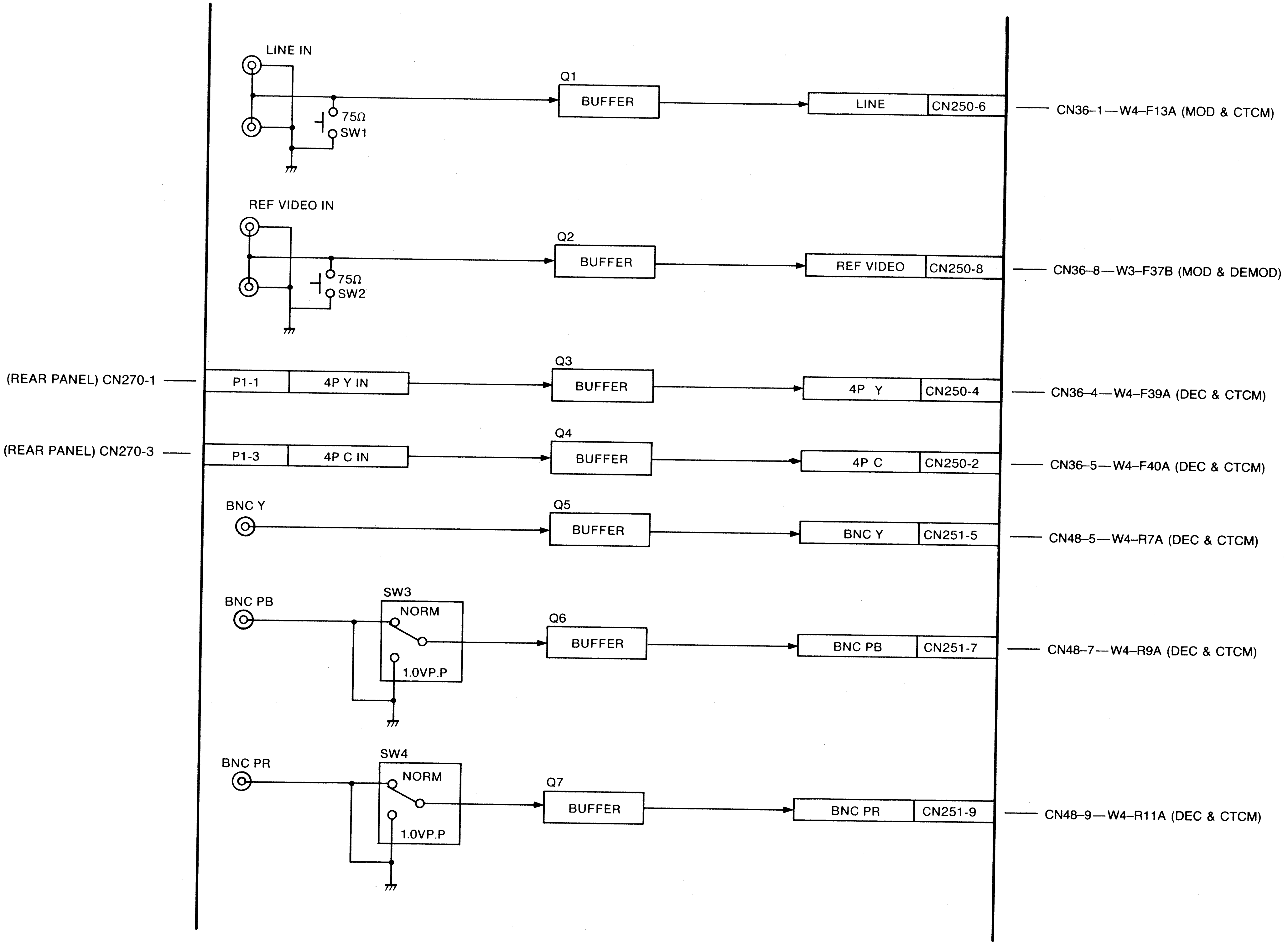
LINE IN
75Ω
SW1
Q1
BUFFER
LINE
CN250-6
CN36–1—W4–F13A (MOD & CTCM)
REF VIDEO IN
75Ω
SW2
Q2
BUFFER
REF VIDEO
CN250-8
CN36–8—W3–F37B (MOD & DEMOD)
(REAR PANEL) CN270-1
P1-1
4P Y IN
Q3
BUFFER
4P Y
CN250-4
CN36–4—W4–F39A (DEC & CTCM)
(REAR PANEL) CN270-3
P1-3
4P C IN
Q4
BUFFER
4P C
CN250-2
CN36–5—W4–F40A (DEC & CTCM)
BNC Y
Q5
BUFFER
BNC Y
CN251-5
CN48–5—W4–R7A (DEC & CTCM)
BNC PB
SW3
NORM
1.0VP.P
Q6
BUFFER
BNC PB
CN251-7
CN48–7—W4–R9A (DEC & CTCM)
BNC PR
SW4
NORM
1.0VP.P
Q7
BUFFER
BNC PR
CN251-9
CN48–9—W4–R11A (DEC & CTCM)

VIDEO I/O BLOCK

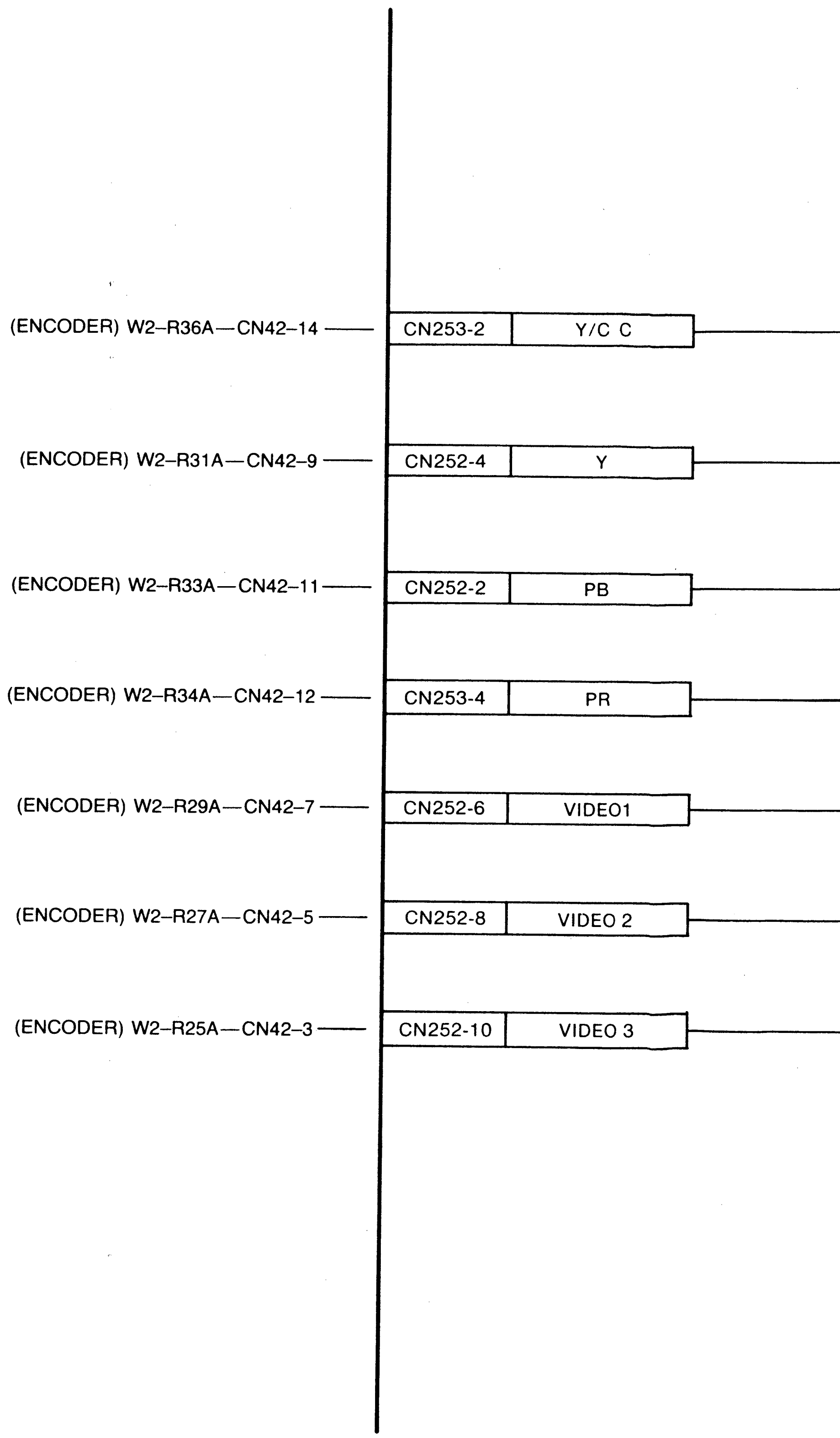
(ENCODER) W2–R36A—CN42–14
CN253-2
Y/C C
(ENCODER) W2–R31A—CN42–9
CN252-4
Y
(ENCODER) W2–R33A—CN42–11
CN252-2
PB
(ENCODER) W2–R34A—CN42–12
CN253-4
PR
(ENCODER) W2–R29A—CN42–7
CN252-6
VIDEO1
(ENCODER) W2–R27A—CN42–5
CN252-8
VIDEO 2
(ENCODER) W2–R25A—CN42–3
CN252-10
VIDEO 3

J-65,AU-63,AU-62]

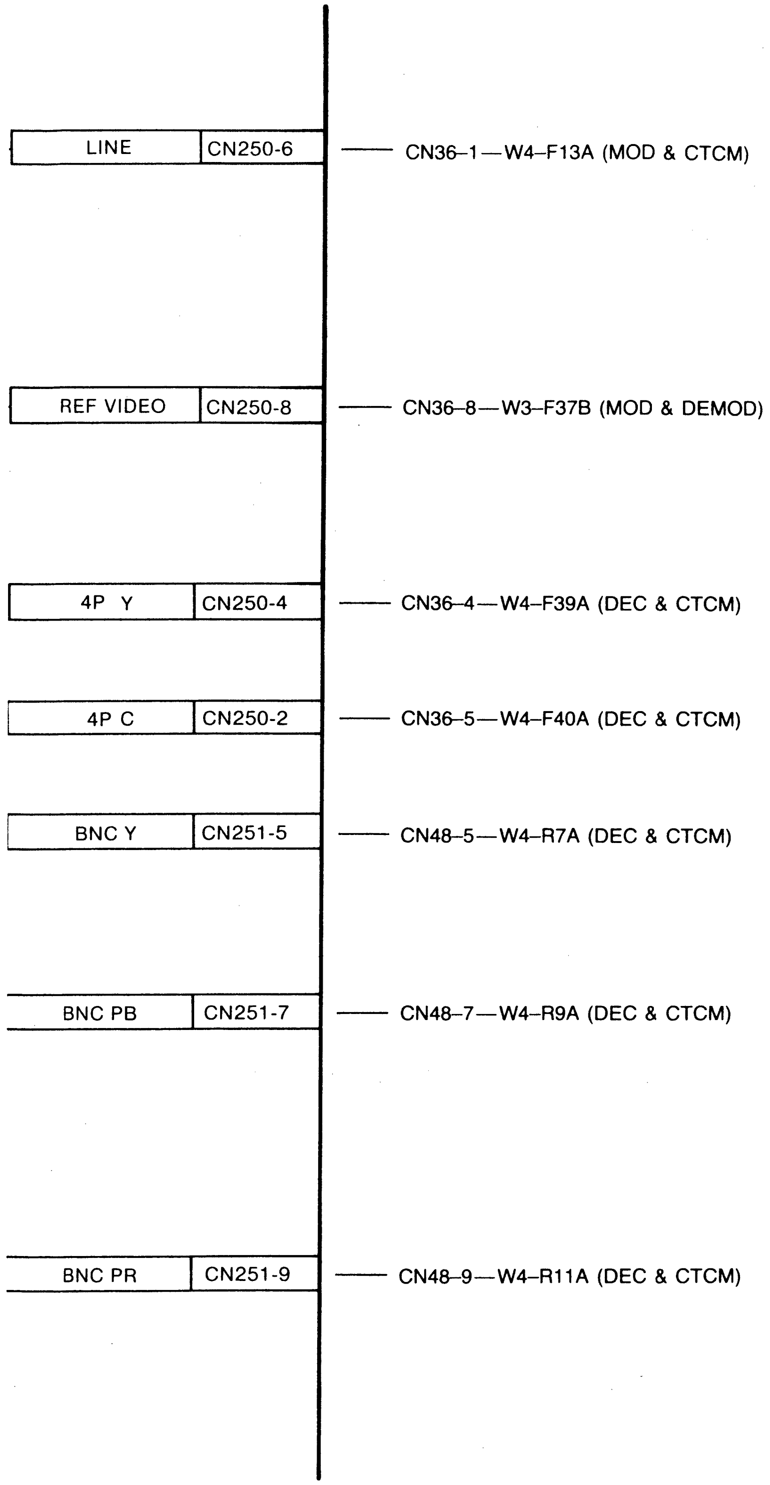

LINE
CN250-6
CN36–1—W4–F13A (MOD & CTCM)
REF VIDEO
CN250-8
CN36–8—W3–F37B (MOD & DEMOD)
4P Y
CN250-4
CN36–4—W4–F39A (DEC & CTCM)
4P C
CN250-2
CN36–5—W4–F40A (DEC & CTCM)
BNC Y
CN251-5
CN48–5—W4–R7A (DEC & CTCM)
BNC PB
CN251-7
CN48–7—W4–R9A (DEC & CTCM)
BNC PR
CN251-9
CN48–9—W4–R11A (DEC & CTCM)

VIDEO I/O BLOCK DIAGRAM 2/2[FOR AU-65,AU-63,AU-62]

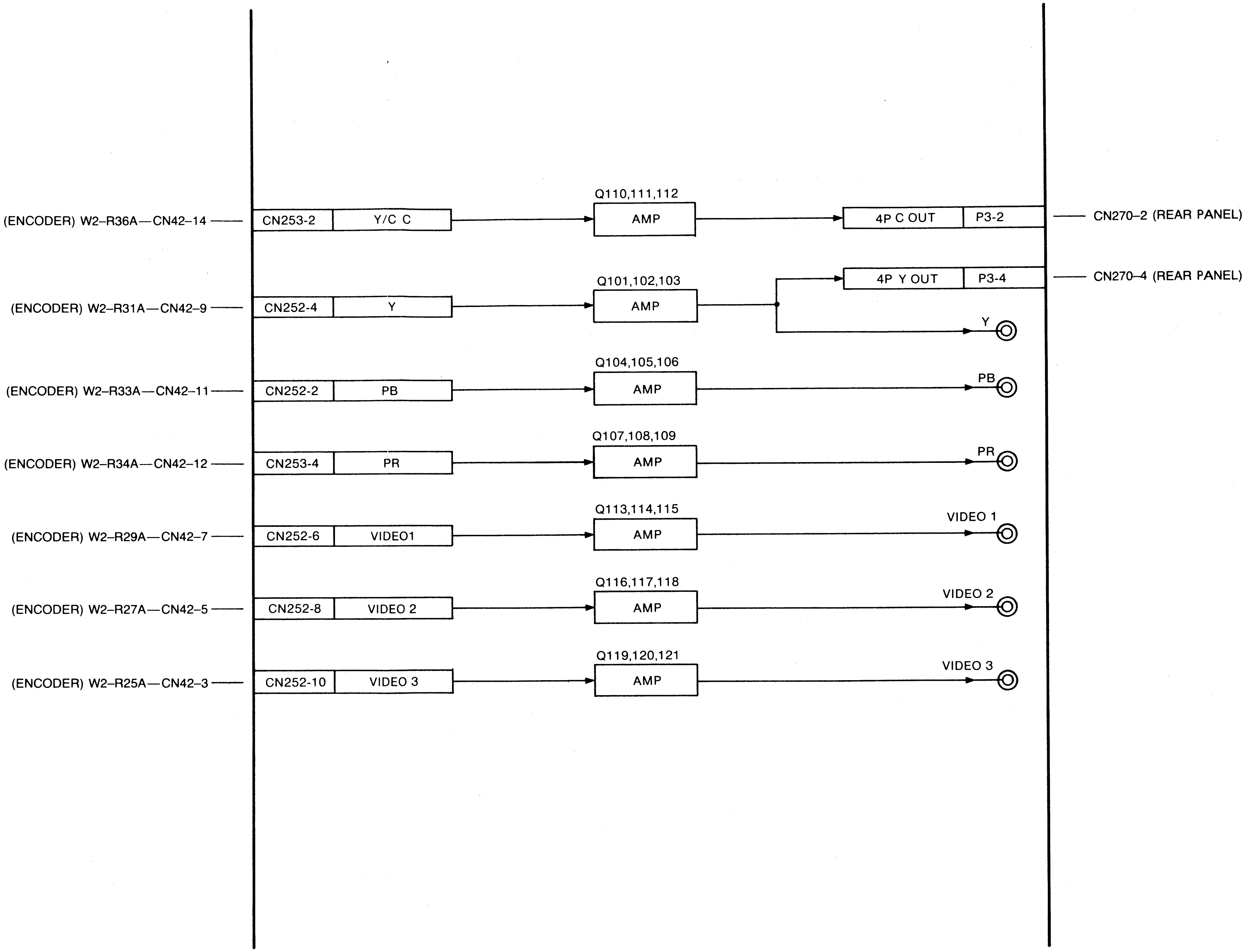

(ENCODER) W2–R36A—CN42–14
CN253-2
Y/C C
Q110,111,112
AMP
4P C OUT
P3-2
CN270–2 (REAR PANEL)
4P Y OUT
P3-4
CN270–4 (REAR PANEL)
(ENCODER) W2–R31A—CN42–9
CN252-4
Y
Q101,102,103
AMP
Y
(ENCODER) W2–R33A—CN42–11
CN252-2
PB
Q104,105,106
AMP
PB
(ENCODER) W2–R34A—CN42–12
CN253-4
PR
Q107,108,109
AMP
PR
(ENCODER) W2–R29A—CN42–7
CN252-6
VIDEO1
Q113,114,115
AMP
VIDEO 1
(ENCODER) W2–R27A—CN42–5
CN252-8
VIDEO 2
Q116,117,118
AMP
VIDEO 2
(ENCODER) W2–R25A—CN42–3
CN252-10
VIDEO 3
Q119,120,121
AMP
VIDEO 3

CN NO. INFORMATION

CN/P NO.	NAME	LOCATION NO.
CN8	W.MOTHER	15
CN9	W.MOTHER	15
CN12	W.MOTHER	15
CN13	W.MOTHER	15
CN14	W.MOTHER	15
CN15	W.MOTHER	15
CN17	W.MOTHER	15
CN20	W.MOTHER	2
CN21	W.MOTHER	2
CN22	W.MOTHER	24
CN23	W.MOTHER	2
CN24	W.MOTHER	2
CN25	W.MOTHER	24
CN26	W.MOTHER	2
CN28	W.MOTHER	24
CN30	W.MOTHER	2
CN31	W.MOTHER	15
CN34	W.MOTHER	2
CN35	W.MOTHER	15
CN36	W.MOTHER	24
CN37	W.MOTHER	24
CN39	W.MOTHER	15
CN40	W.MOTHER	2
CN41	W.MOTHER	2
CN42	W.MOTHER	24
CN46	W.MOTHER	2
CN48	W.MOTHER	24
CN49	W.MOTHER	24
CN50	B.MOTHER	1
CN51	B.MOTHER	1
CN52	B.MOTHER	1
CN53	B.MOTHER	22
CN54	B.MOTHER	22
CN55	B.MOTHER	14
CN56	B.MOTHER	1
CN57	B.MOTHER	14
CN58	B.MOTHER	1
CN59	B.MOTHER	1
CN60	B.MOTHER	1
CN81	RA & HA & RE	18
CN82	RA & HA & RE	18

CN/P NO.	NAME	LOCATION NO.
CN83	RA & HA & RE	18
CN84	RA & HA & RE	18
CN85	RA & HA & RE	18
CN86	RA & HA & RE	18
CN87	RA & HA & RE	18
CN110	MECHA INTERFACE	21
CN111	MECHA INTERFACE	21
CN112	MECHA INTERFACE	21
CN113	MECHA INTERFACE	21
CN114	MECHA INTERFACE	21
CN115	MECHA INTERFACE	21
CN116	MECHA INTERFACE	21
CN117	MECHA INTERFACE	21
CN118	MECHA INTERFACE	21
CN119	MECHA INTERFACE	21
CN120	MECHA INTERFACE	21
CN121	MECHA INTERFACE	21
CN130	FRONT INTERFACE	3
CN131	FRONT INTERFACE	3
CN132	FRONT INTERFACE	3
CN133	FRONT INTERFACE	3
CN134	FRONT INTERFACE	3
CN135	FRONT INTERFACE	3
CN136	FRONT INTERFACE	3
CN137	FRONT INTERFACE	3
CN138	FRONT INTERFACE	3
CN139	FRONT INTERFACE	3
CN140	FRONT INTERFACE	3
CN160	AUDIO VR	7
CN161	AUDIO VR	7
CN162	AUDIO VR	7
CN163	AUDIO VR	7
CN164	AUDIO VR	7
CN165	AUDIO VR	7
CN166	AUDIO VR	7
CN167	AUDIO VR	7
CN168	AUDIO VR	7
CN180	FRONT MODE SELECT	8
CN181	FRONT MODE SELECT	8
CN190	FRONT SW & VR	4
CN191	FRONT SW & VR	23

CN/P NO.	NAME	LOCATION NO.
CN192	FRONT SW & VR	23
CN193	FRONT SW & VR	23
CN200	AUDIO I/O	26
CN201	AUDIO I/O	26
CN202	AUDIO I/O	26
CN203	AUDIO I/O	12
CN204	AUDIO I/O	12
CN205	AUDIO I/O	26
CN206	AUDIO I/O	26
CN207	AUDIO I/O	26
CN208	AUDIO I/O	26
CN211	AUDIO I/O	26
CN212	AUDIO I/O	26
CN213	AUDIO I/O	26
CN215	AUDIO I/O	26
CN240	AUDIO I/O	26
CN242	AUDIO I/O	26
CN250	VIDEO I/O	29
CN251	VIDEO I/O	29
CN252	VIDEO I/O	29
CN253	VIDEO I/O	29
CN254	VIDEO I/O	29
CN255	VIDEO I/O	29
CN256	VIDEO I/O	29
CN257	VIDEO I/O	29
CN261	AUDIO INPUT SW	27
CN262	AUDIO INPUT SW	27
CN270	REAR PANEL	30
CN280	REAR PANEL	30
CN302	W.MOTHER	15
CN330	AT HA	19
CN331	AT HA	19
CN332	AT HA	19
CN350	AT POWER	16
CN601	W.MOTHER	24
CN602	W.MOTHER	24

CN/P NO.	NAME	LOCATION NO.
P0	DRUM	17
P01	DRUM	17
P1	VIDEO I/O	29
P2	VIDEO I/O	29
P3	VIDEO I/O	29
P4	VIDEO I/O	29
P10	AT POWER	16
P100	METER LAMP	11
P101	W.MOTHER	15
P109	HEAD PHONE	13
P112	FRONT UP PANEL	5
P113	FRONT UP PANEL	5
P115	FRONT UP PANEL	5
P128	VIDEO VR	10
P150	FRONT INTERFACE	3
P153	FRONT MODE SELECT	8
P155	FRONT MODE SELECT	8
P301	W.MOTHER	15
P405	MECHA INTERFACE	21
P406	CARRIAGE	20
P431	MECHA INTERFACE	21
P432	MECHA INTERFACE	21
P551	W.MOTHER	15
P553	W.MOTHER	15
P61002	MECHA INTERFACE	21
P61003	MECHA INTERFACE	21
P61006	MECHA INTERFACE	21
P61007	MECHA INTERFACE	21
P61008	MECHA INTERFACE	21
P61012	DRUM	17
P61013	DRUM	17
P61017	MECHA INTERFACE	21
P61020	MECHA INTERFACE	21
P61021	MECHA INTERFACE	21
P61022	MECHA INTERFACE	21
P61025	MECHA INTERFACE	21
P61027	MECHA INTERFACE	21
P61032	MECHA INTERFACE	21
P61033	MECHA INTERFACE	21

CN/P NO.	NAME	LOCATION NO.
POWER 1	W.MOTHER	24
POWER 2	W.MOTHER	24
POWER 10	B.MOTHER	22
POWER 20	POWER FILTER	28
POWER 21	POWER FILTER	28
POWER 22	POWER FILTER	28

CN/P NO.	NAME	LOCATION NO.
CP1	POWER BOX	25
CP51	POWER BOX	25
CP52	POWER BOX	25
CP53	POWER BOX	25

CN : CONNECTOR
P : PLUG
LOCATION NO. :
REFERENCE NO OF P.C.BOARD (REFER TO THE INTERCONNECTION SCHEMATIC DIAGRAM)

INTERCONNECTION 1/3

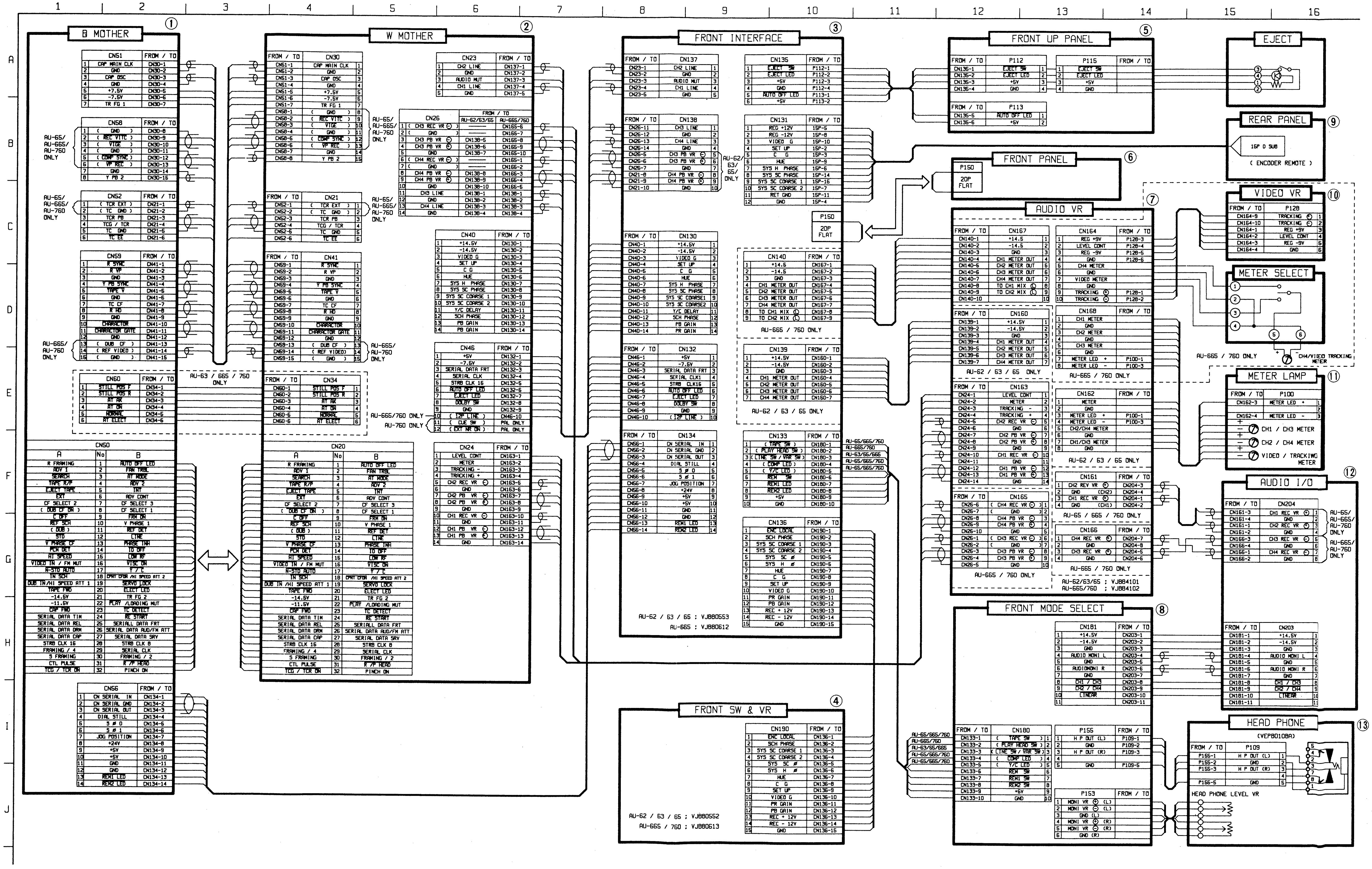
1
2
3
4
5
6
7
8
9
10
11
12
13
14
15
16
A
B
C
D
E
F
G
H
I
J
① B MOTHER
② W MOTHER
③ FRONT INTERFACE
④ FRONT SW & VR
⑤ FRONT UP PANEL
⑥ FRONT PANEL
⑦ AUDIO VR
⑧ FRONT MODE SELECT
EJECT
⑨ REAR PANEL
⑩ VIDEO VR
METER SELECT
⑪ METER LAMP
⑫ AUDIO I/O
⑬ HEAD PHONE
(VEP80108A)
CN51
CN58
CN52
CN59
CN60
CN50
CN56
CN30
CN23
CN26
CN21
CN41
CN40
CN34
CN46
CN20
CN24
CN137
CN135
CN138
CN131
CN130
CN140
CN132
CN139
CN134
CN133
CN136
CN190
P112
P115
P113
P150
20P FLAT
CN167
CN164
CN160
CN168
CN163
CN162
CN165
CN161
CN166
P128
P100
CN204
CN181
CN203
CN180
P155
P153
P109
15P D SUB
(ENCODER REMOTE)
AU-65/ AU-665/ AU-760 ONLY
AU-665/ AU-760 ONLY
AU-63 / 665 / 760 ONLY
AU-665/760 ONLY
AU-760 ONLY
AU-62/ 63/ 65/ ONLY
AU-665 / 760 ONLY
AU-62 / 63 / 65 ONLY
AU-62 / 63 / 65 : VJ880553
AU-665 : VJ880612
AU-62 / 63 / 65 : VJ880552
AU-665 / 760 : VJ880613
AU-62/63/65 ; VJ884101
AU-665/760 ; VJ884102
AU-65 / 665 / 760 ONLY
CH1 / CH3 METER
CH2 / CH4 METER
VIDEO / TRACKING METER
CH4/VIDEO TRACKING METER
HEAD PHONE LEVEL VR

REVERSE SIDE CN NO. LOCATION

INTERCONNECTION 2/3

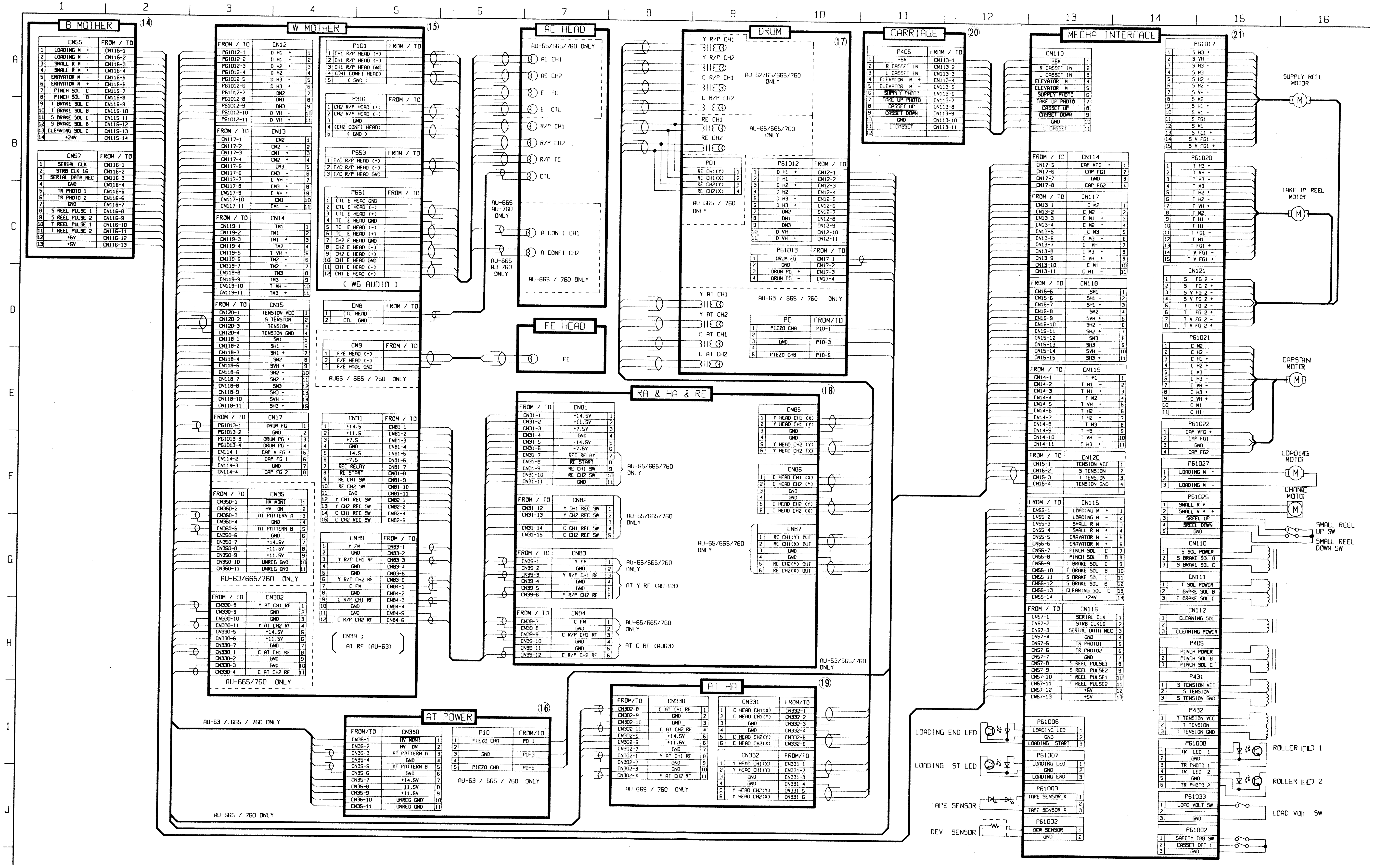
B MOTHER (14)
W MOTHER (15)
AC HEAD
FE HEAD
DRUM (17)
CARRIAGE (20)
MECHA INTERFACE (21)
RA & HA & RE (18)
AT HA (19)
AT POWER (16)
(W6 AUDIO)
AU-63 / 665 / 760 ONLY
AU-665 / 760 ONLY
SUPPLY REEL MOTOR
TAKE UP REEL MOTOR
CAPSTAN MOTOR
LOADING MOTOR
CHANGE MOTOR
SMALL REEL UP SW
SMALL REEL DOWN SW
ROLLER LED 1
ROLLER LED 2
LOAD VOLT SW
LOADING END LED
LOADING ST LED
TAPE SENSOR
DEV SENSOR

INTERCONNECTION 3/3

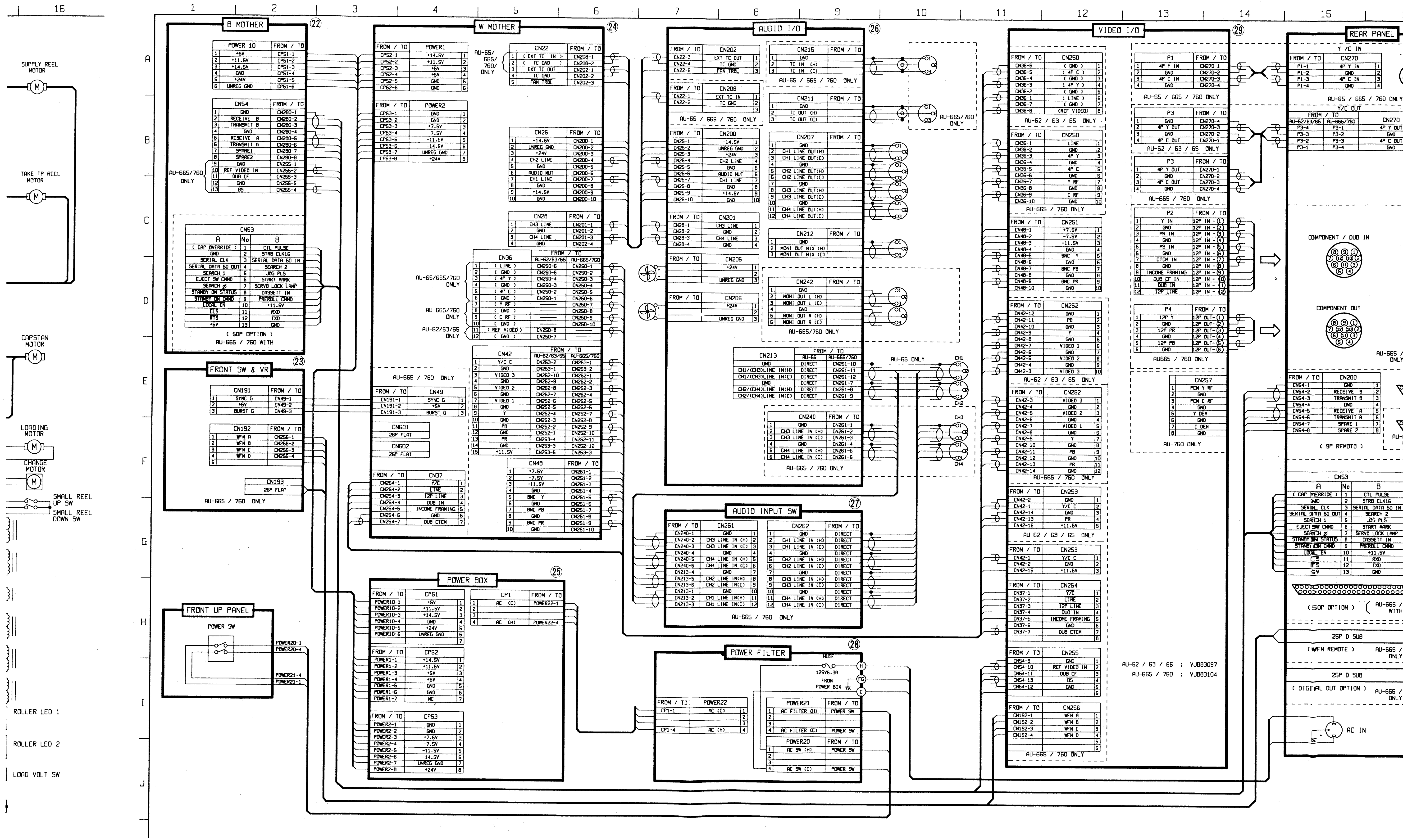

B MOTHER ㉒
W MOTHER ㉔
AUDIO I/O ㉖
VIDEO I/O ㉙
REAR PANEL
FRONT SW & VR ㉓
FRONT UP PANEL
POWER SW
POWER BOX ㉕
AUDIO INPUT SW ㉗
POWER FILTER ㉘
SUPPLY REEL MOTOR
TAKE TP REEL MOTOR
CAPSTAN MOTOR
LOADING MOTOR
CHANGE MOTOR
SMALL REEL UP SW
SMALL REEL DOWN SW
ROLLER LED 1
ROLLER LED 2
LOAD VOLT SW
AU-665/760 ONLY
AU-65 / 665 / 760 ONLY
AU-62 / 63 / 65 ONLY
AU-665 / 760 ONLY
AU-65 ONLY
AU-760 ONLY
(SOP OPTION)
AU-665 / 760 WITH
COMPONENT / DUB IN
COMPONENT OUT
(9P RFMOTO)
25P D SUB
(WFM REMOTE)
(DIGITAL OUT OPTION)
AC IN
FUSE
125V6.3A
FROM POWER BOX
CH1
CH2
CH3
CH4
AU-62 / 63 / 65 : VJ883097
AU-665 / 760 : VJ883104
A
B
C
D
E
F
G
H
I
J
16
1
2
3
4
5
6
7
8
9
10
11
12
13
14
15

MODEL / TYPE	AU-665	AU-65	AU-63	AU-62
NTSC	VEP80548B	VEP80548A	VEP80548D	VEP80548C
PAL	VEP80548E	VEP80548A	VEP80548D	VEP80548C

WO (W,MOTHER) SCHEMATIC DIAGRAM 1/4

FRONT

VJP1232T

	CN23	FROM / TO		
1	CH2 LINE	W6-R35B		
2	GND	W6-R35A		
3	AUDIO MUT	W6-R36A		
4	CH1 LINE	W6-R44B		
5	GND	W6-R44A		

VJP1931T

	CN24	FROM / TO			
1	LEVEL CONT	W4-F19A,B			
2	METER	W3-R30A,B			
3	TRACKING -	W5-R18A			
4	TRACKING +	W5-R17A			
5	(CH2 REC VR ⊖)	W6-R33B			AU-65/665/760 ONLY
6	(GND)	W6-R33A			AU-65/665/760 ONLY
7	CH2 PB VR ⊖	W6-R34B			
8	CH2 PB VR ⊕	W6-R34A			
9	GND	W6-R33A			
10	(CH1 REC VR ⊖)	W6-R42B			AU-65/665/760 ONLY
11	(GND)	W6-R42A			AU-65/665/760 ONLY
12	CH1 PB VR ⊖	W6-R43B			
13	CH1 PB VR ⊕	W6-R43A			
14	GND	W6-R42A			

VJP1931T

	CN26	FROM / TO			
1	(CH3 REC VR ⊖)	W6-F34B			AU-665/760 ONLY
2	(GND)	W6-F34A			AU-665/760 ONLY
3	CH3 PB VR ⊖	W6-F35B			
4	CH3 PB VR ⊕	W6-F35A			
5	GND	W6-F34A			
6	(CH4 REC VR ⊖)	W6-F38B			AU-665/760 ONLY
7	(GND)	W6-F38A			AU-665/760 ONLY
8	CH4 PB VR ⊖	W6-F39B			
9	CH4 PB VR ⊕	W6-F39A			
10	GND	W6-F38A			
11	CH3 LINE	W6-F36B	CN28-1		
12	GND	W6-F36A	CN28-2		
13	CH4 LINE	W6-F40B	CN28-3		
14	GND	W6-F40A	CN28-4		

VJP1929T

	CN40	FROM / TO		
1	+14.5V	W5-R46A		
2	-14.5V	W5-R5A,B		
3	VIDEO G	W1-R9A	W2-R9A	
4	SET UP	W2-R20B		
5	C G	W1-R10A	W2-R10A	
6	HUE	W2-R20A		
7	SYS H PHASE	W1-R36B		
8	SYS SC PHASE	W1-R36A		
9	SYS SC COARSE 1	W1-R37B		
10	SYS SC COARSE 2	W1-R36B		
11	Y/C DELAY	W1-F8B		
12	SCH PHASE	W1-R38B		
13	PB GAIN	W1-R11B		
14	PR GAIN	W1-R11A		

VJP1252T

	CN46	FROM / TO			
1	+5V	W5-F2A,B			
2	-7.5V	W5-R3A,B			
3	SERIAL DATA FRT	CN20-25B			
4	SERIAL CLK	CN20-29B	W5-R9B	W6-F48A	
5	STRB CLK 16	CN20-28A	W5-R10B	W6-F49A	
6	AUTO OFF LED	CN20-1B			
7	EJECT LED	CN20-20B			
8	DOLBY SW	W6-R12B			
9	GND				
10	(12P LINE)	CN37-3			AU-665/760 ONLY
11	(CUE SW)	CN402-5			AU-760 ONLY
12	(EXT NR ON)	W6-R38A			AU-760 ONLY

VJP1243T (AU-665/635 ONLY)

	CN49	FROM / TO		
1	SYNC G	W2-R11A		
2	+5V			
3	BURST G	W2-R11B		

MECHA

VJP1229T

	CN8	FROM / TO		
1	CTL HEAD	W5-R33B		
2	CTL GND	W5-R32B	W5-R34B	

VJP1230T (AU-65/665/760 ONLY)

	CN9	FROM / TO		
1	F/E HEAD ⊕	W6-R9A		
2	F/E HEAD ⊖	W6-R9B		
3	F/E HEAD GND	W6-R10A,B		

VJP1511T

	CN12	FROM / TO		
1	D H1+	W5-F35A		
2	D H1-	W5-F35B		
3	D H2+	W5-F36A		
4	D H2-	W5-F36B		
5	D H3-	W5-F37A		
6	D H3+	W5-F37B		
7	D M2	W5-F38A,B		
8	D M1	W5-F39A,B		
9	D M3	W5-F40A,B		
10	D VH-	W5-F41A,B		
11	D VH+	W5-F42A,B		

VJP1511T

	CN13	FROM / TO		
1	C M2	W5-F26A,B		
2	C H2-	W5-F27A		
3	C H1+	W5-F27B		
4	C H2+	W5-F29A		
5	C M3	W5-F28A,B		
6	C H3-	W5-F29B		
7	C VH-	W5-F30A,B		
8	C H3+	W5-F32A		
9	C VH+	W5-F31A,B		
10	C M1	W5-F33A,B		
11	C H1-	W5-F32B		

VJP1511T

	CN14	FROM / TO		
1	T M1	W5-F17A,B		
2	T H1-	W5-F18A		
3	T H1+	W5-F18B		
4	T M2	W5-F19A,B		
5	T VH+	W5-F20A,B		
6	T H2-	W5-F21A		
7	T H2+	W5-F21B		
8	T M3	W5-F22A,B		
9	T H3-	W5-F24A		
10	T VH-	W5-F23A,B		
11	T H3+	W5-F24B		

VJP1932T

	CN15	FROM / TO		
1	TENSION VCC	W5-F7A		
2	S TENSION	W5-F6A		
3	T TENSION	W5-F6B		
4	TENSION GND	W5-F7B		
5	S M1	W5-F9A,B		
6	S H1-	W5-F10A		
7	S H1+	W5-F10B		
8	S M2	W5-F11A,B		
9	S VH+	W5-F12A,B		
10	S H2-	W5-F13A		
11	S H2+	W5-F13B		
12	S M3	W5-F14A,B		
13	S H3-	W5-F16A		
14	S VH-	W5-F15A,B		
15	S H3+	W5-F16B		

VJP1235T

	CN17	FROM / TO		
1	DRUM FG	W5-R28B		
2	GND	W5-R29B		
3	DRUM PG+	W5-R30B		
4	DRUM PG-	W5-R31B		
5	CAP V FG+	W5-R30A		
6	CAP FG 1	W5-R31A		
7	GND	W5-R32A		
8	CAP FG 2	W5-R33A		

REAR

VJP1232T

	CN22	FROM / TO			
1	(EXT TC IN)	W6-F10B			AU-65/665/760 ONLY
2	(TC GND)	W6-F11B			AU-65/665/760 ONLY
3	EXT TC OUT	W6-F10A			
4	TC GND	W6-F11A			
5	FAN TRBL	CN20-2B			

VJP1237T

	CN25	FROM / TO		
1	-14.5V	W6-R5A,B		
2	UNREG GND	W6-R6A,B		
3	+24V	W6-R7A,B		
4	CH2 LINE	W6-R35B	CN23-1	
5	GND	W6-R35A	CN23-2	
6	AUDIO MUT	W6-R36A	CN23-3	
7	CH1 LINE	W6-R44B	CN23-4	
8	GND	W6-R44A	CN23-5	
9	+14.5V	W6-R46A,B	CN303-1	
10	GND	W6-R50A,B	CN303-3	

VJP1231T

	CN28	FROM / TO		
1	CH3 LINE	W6-F36B	CN26-11	
2	GND	W6-F36A	CN26-12	
3	CH4 LINE	W6-F40B	CN26-13	
4	GND	W6-F40A	CN26-14	

VJP1239T

	CN36	FROM / TO			
1	(LINE)	W4-F13A			AU-65/665/760 ONLY
2	(GND)	W4-F12A			AU-65/665/760 ONLY
3	(4P Y)	W4-F38A			AU-65/665/760 ONLY
4	(GND)	W4-F39A			AU-65/665/760 ONLY
5	(4P C)	W4-F40A			AU-65/665/760 ONLY
6	(GND)	W4-F41A			AU-65/665/760 ONLY
7	(Y RF)	W3-F36B			AU-665/760 ONLY
8	(GND)	W3-F37B			AU-665/760 ONLY
9	(C RF)	W3-F47B	W6-F44B		AU-665/760 ONLY
10	(GND)	W3-F48B			AU-665/760 ONLY
11	(REF VIDEO)	W1-R45B	CN41-15		AU-65/63/62 ONLY
12	(GND)	W1-R44B	CN41-14		AU-65/63/62 ONLY

VJP1234T (AU-665 ONLY)

	CN37	FROM / TO		
1	Y/C	W4-F22A,B	CN20-17B	
2	LINE	W4-F21A,B	CN20-12B	W1-R31B
3	12P LINE	CN46-10		
4	DUB IN /H1 SPEED ATT 1	W6-R12A	CN20-19A	
5	INCOME FRAMING	W1-R18B		
6	GND	W4-R43A		
7	DUB CTCM	W4-R42A		

VJP1932T

	CN42	FROM / TO		
1	Y/C C	W2-R23A		
2	GND	W2-R24A		
3	VIDEO 3	W2-R25A		
4	GND	W2-R26A		
5	VIDEO 2	W2-R27A		
6	GND	W2-R28A		
7	VIDEO 1	W2-R29A		
8	GND	W2-R30A		
9	Y	W2-R31A		
10	GND	W2-R32A		
11	PB	W2-R33A		
12	GND	W2-R34A		
13	PR	W2-R35A		
14	GND	W2-R36A		
15	+11.5V	W2-R46A		

VJP1237T

	CN48	FROM / TO			
1	+7.5V	W4-R2A,B			
2	-7.5V	W4-R3A,B			
3	-11.5V	W4-R4A,B			
4	GND	W4-R6A,B			
5	(BNC Y)	W4-R7A			AU-65/665/760 ONLY
6	(GND)	W4-R8A			AU-65/665/760 ONLY
7	(BNC PB)	W4-R9A			AU-65/665/760 ONLY
8	(GND)	W4-R10A			AU-65/665/760 ONLY
9	(BNC PR)	W4-R11A			AU-65/665/760 ONLY
10	(GND)	W4-R12A			AU-65/665/760 ONLY

VJP1233T (PAL ONLY)

	CN400	FROM / TO		
1	CH2 DECODE IN	W6-R29B		
2	GND	W6-R29A		
3	CH2 DECODE OUT	W6-R30B		
4	CH2 ENCODE IN	W6-R31B		
5	GND	W6-R31A		
6	CH2 ENCODE OUT	W6-R32B		

VJP1236T (PAL ONLY)

	CN401	FROM / TO		
1	CH2 EE	W6-R36B		
2	CH1 EE	W6-R37B		
3	EXT NR OUT	W6-R37A		
4	CH1 DECODE IN	W6-R38B		
5	GND	W6-R39A		
6	CH1 DECODE OUT	W6-R39B		
7	CH1 ENCODE IN	W6-R40B		
8	GND	W6-R40A		
9	CH1 ENCODE OUT	W6-R41B		

VJP1232T (PAL ONLY)

	CN402	FROM / TO		
1	CUE REC	W6-F7A		
2	CUE	W6-F7B		
3	+5V	W6-F2A,B		
4	GND	W6-F1A,B		
5	CUE SW	CN46-11		

VJP1231T (SPARE)

	CN500	FROM / TO		
1	Y PB 1	W3-F7A,B	W2-F7A	
2	GND	W3-F9A,B	W2-F8A,B	CN30-14
3	C PB	W3-F10A,B	W2-F9A	
4	GND	W3-F11A,B	W2-F10A,B	

PCM

VJP1230T (PCM ONLY)

	CN301	FROM / TO		
1	PCM H SW	W5-R25B		
2	PCM GATE	W5-R26B		
3	GND	W5-R29A		

VJP1230T

	CN303	FROM / TO		
1	+14.5V	W6-R46A,B		
2	+11.5V	W6-R47A,B		
3	GND	W6-R50A,B		

VJP1233T

	CN304	FROM / TO		
1	C PCM AT RF	W3-F43B		
2	GND	W3-F44B		
3	Y PCM AT RF	W3-F49B		
4	GND	W3-F50B		
5	HD	W1-R18A		
6	GND	W1-R19A		

AT H.A

VJP1511T (AU-665/760 ONLY)

	CN302	FROM / TO		
1	Y AT CH1 RF	W3-R10A,B		
2	GND	W3-R12A,B		
3	GND	W3-R12A,B		
4	Y AT CH2 RF	W3-R11A,B		
5	+14.5V	W4-W46A,B		
6	+11.5V	W4-R47A,B		
7	GND	W4-R50A,B		
8	C AT CH1 RF	W3-R16A,B		
9	GND	W3-R18A,B		
10	GND	W3-R18A,B		
11	C AT CH2 RF	W3-R17A,B		

AT POWER

VJP1251T (AU-63/665/760 ONLY)

	CN35	FROM / TO		
1	HV MONI	W5-R43A		
2	HV ON	W5-R43B		
3	AT PATTERN A	W5-R44A		
4	GND	W5-R45A		
5	AT PATTERN B	W5-R44B		
6	GND	W5-R45B		
7	+14.5V	W5-R46A		
8	-11.5V	W5-R4A,B		
9	+11.5V	W5-R47A,B		
10	UNREG GND	W5-R6A,B		
11	UNREG GND	W5-R6A,B		

RA.HA.RE

VJP1932T

	CN31	FROM / TO		
1	+14.5V	W5-R46A	CN35-7	
2	+11.5V	W5-R47A	CN35-9	
3	+7.5V	W5-R2A,B	CN30-5	
4	GND	W5-R1A,B	CN30-4	
5	-14.5V	W5-R5A,B		
6	-7.5V	W5-R3A,B	CN30-6	
7	REC RELAY	W5-R19B	W6-F46A	
8	RE START	W5-R19A	CN20-24B	
9	RE CH1 SW	W5-R20A		
10	RE CH2 SW	W5-R20B		
11	GND			
12	Y CH1 REC SW	W5-R21A		
13	Y CH2 REC SW	W5-R22A		
14	C CH1 REC SW	W5-R21B		
15	C CH2 REC SW	W5-R22B		

VJP1239T

	CN39	FROM / TO		
1	Y FM	W3-R33A,B		
2	GND	W3-R34A,B		
3	Y R/P CH1 RF	W3-R7A,B		
4	GND	W3-R9A,B		
5	GND	W3-R9A,B		
6	Y R/P CH2 RF	W3-R8A,B		
7	C FM	W3-R36A,B		
8	GND	W3-R35A,B		
9	C R/P CH1 RF	W3-R13A,B		
10	GND	W3-R15A,B		
11	GND	W3-R15A,B		
12	C R/P CH2 RF	W3-R14A,B		

VJP1233T (PCM ONLY)

	CN300	FROM / TO		
1	Y CH1 PCM GATE	W5-R23A		
2	Y CH2 PCM GATE	W5-R24A		
3	GND	W5-R29A		
4	C CH1 PCM GATE	W5-R23B		
5	C CH2 PCM GATE	W5-R24B		
6	GND	W5-R29A		

POWER BOX

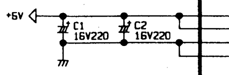

VJP1709

	POWER1	FROM / TO		
1	+14.5V			
2	+11.5V			
3	+5V			
4	+5V			
5	GND			
6	GND			

VJP1627

	POWER2	FROM / TO		
1	GND			
2	GND			
3	+7.5V			
4	-7.5V			
5	-11.5V			
6	-14.5V			
7	UNREG GND			
8	+24V			

W0 (W,MOTHER) SCHEMATIC DIAGRAM 2/4

B MOTHWER

VJP1232T

	CN21	FROM / TO			
1	(TCR EXT)	W6-F8B			AU-65/665/760 ONLY
2	(TC GND)	W6-F9A			AU-65/665/760 ONLY
3	TCR PB	W6-F8A			
4	TCG/TCR	W6-F9B			
5	TC GND	W6-F9A			
6	TC EE	W6-F13B			

VJP1932T

	CN30	FROM / TO			
1	CAP MAIN CLK	W5-R8A			
2	GND	W5-R1A,B	CN31-4	CN30-4	
3	CAP OSC	W5-R8B			
4	GND	W5-R1A,B	CN31-4	CN30-2	
5	+7.5V	W5-R2A,B			
6	-7.5V	W5-R3A,B			
7	TR FG 1	W6-R14A			
8	(GND)	W5-R24A,B			AU-65/665/760 ONLY
9	(REC VITC)	W5-R25A,B			AU-65/665/760 ONLY
10	(VIGE)	W5-R26A,B			AU-65/665/760 ONLY
11	(GND)	W3-R27A,B	W4-R33A	W4-R28A	AU-65/665/760 ONLY
12	(COMP SYNC)	W1-R14B	W4-R27A	W3-R28A,B	AU-65/665/760 ONLY
13	(VP REC)	W4-R37A			AU-65/665/760 ONLY
14	GND	W3-F9A,B	CN500-2		
15	Y PB 2	W3-F8A,B			

VJP1234T (AU-665/635 ONLY)

	CN34	FROM / TO		
1	STILL POS F	W5-R35B		
2	STILL POS R	W5-R36B		
3	AT AK	W5-R37B		
4	AT ON	W5-R39B		
5	NORMAL	W5-R40B		
6	AT EJECT	W5-R41B		

VJP1932T

	CN41	FROM / TO			
1	R SYNC	W2-R14B	W1-R23B		
2	R VP	W1-R22A			
3	GND				
4	Y PB SYNC	W1-F15B	W2-F18A	W5-F49A	
5	TAPE V	W1-F15A			
6	GND	W1-F14B			
7	TC CF	W1-F16A			
8	R HD	W1-R24B	CN602-2A		
9	GND	W1-R19B	W1-R25A,B		
10	CHARACTOR	W2-R16A			
11	CHARACTOR GATE	W2-R15B			
12	GND	W2-R17A,B	W2-R16B		
13	(DUB CF)	W1-R17B	CN47-3		AU-665/760 ONLY
14	(REF VIDEO)	W1-R45B	CN36-11		AU-665/760 ONLY
15	(GND)	W1-R44B	CN36-12		AU-665/760 ONLY

VJP1230T (SPARE)

	CN600	FROM / TO		
1	T REEL PULSE 1	W5-R13B		
2	S REEL PULSE 1	W5-R13A		
3	CAP OVERRIDE	W5-R28A		

VJP2893A064

CN20

FROM / TO				A	NO	B	FROM / TO			
W1-R21A	CN602-3A			R FRAMING	1	AUTO OFF LED	CN46-6			
W1-R35A				ADV 1	2	FAN TRBL	CN22-5			
W1-F11B				SEARCH	3	AT MODE	W1-F8A			
W1-R34B				TAPE R/P	4	ADV 2	W1-R34A			
W1-F19A				EJECT TAPE	5	INT	W1-R32A			
W1-R33A				EXT	6	ADV CONT	W1-F20B			
W1-R30A				CF SELECT 2	7	CF SELECT 3	W1-R30B			
W1-R26B				(DUB CF ON)	8	CF SELECT 1	W1-R31A			
W1-F18A	W2-F15A	W3-F14A,B		C OFF	9	FRM ON	W1-R10B			
W1-F27B				REF SCH	10	V PHASE 1	W1-R29A	W2-R18A		
W1-R32B	W4-R38A			(DUB)	11	REF DET	W1-R27A			
W1-R28B	W4-R35B			STD	12	LINE	W1-R31B	W4-F21A,B	CN37-2	
W2-F14A				V PHASE CF	13	PHASE INH	W2-F13A			
W3-F38A,B				PCM DET	14	ID OFF	W2-R15A	CN602-1B		
W3-F12A,B	W2-F12B			HI SPEED	15	LOW RF	W3-F22A,B			
W3-R29A,B	W1-F18B	W4-R38B	W6-F32A	VIDEO IN /FM MUT	16	VISC ON	W4-F20A,B			
W4-R34B				N-STD AUTO	17	Y/C	W4-F22A,B	CN37-1		
W4-R34A				IN SCH	18	CPNT CFON /HI SPEED ATT 2	W4-R35A	W6-R13A		
W6-R12A	CN37-4			DUB IN /HI SPEED ATT 1	19	SERVO LOCK	W2-F14B			
W3-F13A,B	W2-F13B			TAPE FWD	20	EJECT LED	CN46-7			
				-14.5V	21	TR FG 2	W5-R14B			
				-11.5V	22	PLAY /LOADING MUT	W6-R13B			
W5-R17B				CAP FWD	23	TC DETECT	W6-F6B			
W5-R12A				SERIAL DATA TIM	24	RE START	W5-R19A	CN31-8		
W5-R10A				SERIAL DATA REL	25	SERIAL DATA FRT	CN46-3			
W5-R11A				SERIAL DATA DRM	26	SERIAL DATA AUD/FM ATT	W6-F48B			
W5-R9A				SERIAL DATA CAP	27	AERIAL DATA SRV	W5-R12B			
W5-R10B	W6-F49A	CN46-5		STRB CLK 16	28	STRB CLK 8	W5-R11B			
W5-R16B				FRAMING /4	29	SERIAL CLK	W5-R9B	W6-F48A	CN46-4	
W5-R7A				S FRAMING	30	FRMING /2	W5-R16A			
W5-R18B				CTL PULSE	31	R/P HEAD	W5-R42B	W1-R33B	W3-F25A,B	
W6-F6A				TCG/TCR ON	32	PINCH ON	W5-R38B			

DIGITAL INTERFACE

(AU-665/760 OPTION)

CN601

FROM / TO				A	NO	B	FROM / TO			
W1-50B				GND	1	PB 1	W1-F49A			
W1-F49B				PB 2	2	PB 3	W1-F48A			
W1-F48B				PB 4	3	PB 5	W1-F47A			
W1-F47B				PB 6	4	PB 7	W1-F46A			
W1-F46B				PB 8	5	PR 1	W1-F44A			
W1-F44B				PR 2	6	PR 3	W1-F43A			
W1-F43B				PR 4	7	PR 5	W1-F42A			
W1-F42B				PR 6	8	PR 7	W1-F41A			
W1-F41B				PR 8	9	GND	W1-F40A,B			
W1-F39B				Y 1	10	Y 2	W1-F38A			
W1-F38B				Y 3	11	Y 4	W1-F37A			
W1-F37B				Y 5	12	Y 6	W1-F36A			
W1-F36B				Y 7	13	Y 8	W1-F35A			

CN602

FROM / TO				A	NO	B	FROM / TO			
W1-F18A	W2-F15A	W3-F14A,B	CN20-9A	C OFF	1	ID OFF	W2-R15A	CN20-14B		
W1-R24B	CN41-8			R HD	2	Y RCLK	W1-F39A			
W1-R21A	CN20-1A			R FRAMING	3	-7.5V	POWER2-4			
				+5V	4	←	POWER1-3,4			
				GND	5	←	POWER1-5,6			
W1-R16B	W2-R12B	W5-R15A		REF CF	6	+11.5V	POWER1-2			
					7					

TYPE \ MODEL	AU-665	AU-65	AU-63	AU-62
NTSC	VEP80548B	VEP80548A	VEP80548D	VEP80548C
PAL	VEP80548E	VEP80548A	VEP80548D	VEP80548C

WO (W,MOTHER) SCHEMATIC DIAGRAM 3/4

WO (W,MOT

1 | 2 | 3 | 4 | 5 | 6 | 7 | 8 | 9 | 10 | 11 | 12 | 13 | 14 | 15 | 16 | 1 | 2

W1-F
VJS2898A100

< W1 > TBC & SYNC GEN (FRONT)

FROM / TO				A	NO	B	FROM / TO			
				GND	1	←				
				+5V	2	←				
				+5V	3	←				
				+11.5V	4	←				
				+11.5V	5	←				
W2-F20A				Y BST	6	GND				
				GND	7	C BST	W2-F20B			
CN20-3B				$\overline{\text{AT MODE}}$	8	Y/C DELAY	CN40-11			
W5-R40A				H CONT 3	9	H CONT 4	W5-R39A			
W5-R42A				H CONT 1	10	H CONT 2	W5-R41A			
W5-F46A	W3-F27A,B			Y HEAD SW	11	$\overline{\text{SEARCH}}$	CN20-3A			
W2-F12A				$\overline{\text{SEARCH ON}}$	12	PB FRAMING 2	W5-R35A			
W5-R36A	W3-F19A,B			$\overline{\text{Y DOP}}$	13	GND				
W5-R38A	W3-F20A,B	W6-F44A		$\overline{\text{C DOP}}$	14	GND	CN41-6			
CN41-5				$\overline{\text{TAPE V}}$	15	$\overline{\text{Y PB SYNC}}$	W5-F49A	CN41-4	W2-F18A	
W2-F17A				$\overline{\text{Y CP}}$	16	$\overline{\text{C PB SYNC}}$	W5-F49B	W2-F18B		
W2-F17B	W3-F17A,B			$\overline{\text{C CP}}$	17	$\overline{\text{AGC CP}}$	W3-F16A,B			
CN20-9A	W2-F15A	W3-F14A,B	CN602-1A	$\overline{\text{C OFF}}$	18	$\overline{\text{VIDEO IN}}$	W3-R29A,B	W4-R38B	CN20-16A	W6-F32A
CN20-6A				$\overline{\text{EJECT TAPE}}$	19	$\overline{\text{E E}}$	W2-F15B	W3-F15A,B	W5-R27B	W6-F46B
				$\overline{\text{Y SH}}$	20	ADV CONT	CN20-6B			
					21					
W2-F22A				GND	22	←	W2-F22B			
W2-F23A				C DATA 7	23	C DATA 8	W2-F23B			
W2-F24A				C DATA 5	24	C DATA 6	W2-F24B			
W2-F25A				C DATA 3	25	C DATA 4	W2-F25B			
W2-F26A				C DATA 1	26	C DATA 2	W2-F26B			
W2-F27A				C WCK	27	GND	W2-F27B			
W2-F28A				GND	28	←	W2-F28B			
W2-F29A				Y DATA 8	29	Y DATA 9	W2-F29B			
W2-F30A				Y DATA 6	30	Y DATA 7	W2-F30B			
W2-F31A				Y DATA 4	31	Y DATA 5	W2-F31B			
W2-F32A				Y DATA 2	32	Y DATA 3	W2-F32B			
W2-F33A				Y WCK	33	Y DATA 1	W2-F33B			
W2-F34A				GND	34	←	W2-F34B			
CN601-13B				Y 8	35	Y 9	—			
CN601-12B				Y 6	36	Y 7	CN601-13A			
CN601-11B				Y 4	37	Y 5	CN601-12A			
CN601-10B				Y 2	38	Y 3	CN601-11A			
CN602-2B				Y RCLK	39	Y 1	CN601-10A			
				GND	40	←	CN601-9B			
CN601-8B				PR 7	41	PR 8	CN601-9A			
CN601-7B				PR 5	42	PR 6	CN601-8A			
CN601-6B				PR 3	43	PR 4	CN601-7A			
CN601-5B				PR 1	44	PR 2	CN601-6A			
				GND	45	GND				
CN601-4B				PB 7	46	PB 8	CN601-5A			
CN601-3B				PB 5	47	PB 6	CN601-4A			
CN601-2B				PB 3	48	PB 4	CN601-3A			
CN601-1B				PB 1	49	PB 2	CN601-2A			
				GND	50	←	CN601-1A			

W2-F
VJS2898A100

< W2 > ENCODER (FRONT)

FROM / TO				A	NO	B	FROM / TO			
				GND	1	←				
				+5V	2	←				
				+5V	3	←				
				+11.5V	4	←				
				+11.5V	5	←				
				GND	6	←				
CN500-1	W3-F7A,B			Y PB 1	7	GND				
CN500-2				GND	8	←				
CN500-3	W3-F10A,B			C PB	9	GND				
CN500-4				GND	10	←				
					11					
W1-F12A				$\overline{\text{SEARCH ON}}$	12	$\overline{\text{HI SPEED}}$	W3-F12A,B	CN20-15A		
CN20-13B				$\overline{\text{PHASE INH}}$	13	$\overline{\text{TAPE FWD}}$	W3-F13A,B	CN20-20A		
CN20-13A				$\overline{\text{V PHASE CF}}$	14	$\overline{\text{SERVO LOCK}}$	CN20-19B			
CN20-9A	W1-F18A	W3-F14A,B	CN602-1A	$\overline{\text{C OFF}}$	15	$\overline{\text{E E}}$	W5-R27B	W1-F19B	W3-F15A,B	W6-F46B
				GND	16	←				
W1-F16A				$\overline{\text{Y CP}}$	17	$\overline{\text{C CP}}$	W1-F17A	W3-F17A,B		
W1-F15B	W5-F49A	CN41-4		$\overline{\text{Y PB SYNC}}$	18	$\overline{\text{C PB SYNC}}$	W1-F16B	W5-F49B		
					19					
W1-F6A				Y BST	20	C BST	W1-F7B			
					21					
W1-F22A				GND	22	←	W1-F22B			
W1-F23A				C DATA 7	23	C DATA 8	W1-F23B			
W1-F24A				C DATA 5	24	C DATA 6	W1-F24B			
W1-F25A				C DATA 3	25	C DATA 4	W1-F25B			
W1-F26A				C DATA 1	26	C DATA 2	W1-F26B			
W1-F27A				C WCK	27	GND	W1-F27B			
W1-F28A				GND	28	←	W1-F28B			
W1-F29A				Y DATA 8	29	Y DATA 9	W1-F29B			
W1-F30A				Y DATA 6	30	Y DATA 7	W1-F30B			
W1-F31A				Y DATA 4	31	Y DATA 5	W1-F31B			
W1-F32A				Y DATA 2	32	Y DATA 3	W1-F32B			
W1-F33A				Y WCK	33	Y DATA 1	W1-F33B			
W1-F34A				GND	34	←	W1-F34B			
					35					
					36					
					37					
					38					
					39					
				GND	40	←				
					41					
					42					
					43					
					44					
W1-R7A				R4SC	45	GND				
					46					
					47					
					48					
					49					
				GND	50	←				

W3-F
VJS2898A100

< W3 > MOD & DEMOD (FRONT)

FROM / TO				A	NO	B	FROM / TO			
				GND	1	←				
				+5V	2	←				
				+5V	3	←				
				+11.5V	4	←				
				+11.5V	5	←				
				GND	6	←				
W2-F7A	CN500-1			Y PB 1	7	←				
CN30-15				Y PB 2	8	←				
CN30-14	CN500-2			GND	9	←				
W2-F9A	CN500-3			C PB	10	←				
CN500-4				GND	11	←				
CN20-15A	W2-F12B			$\overline{\text{HI SPEED}}$	12	←				
CN20-20A	W2-F13B			$\overline{\text{TAPE FWD}}$	13	←				
CN20-9A	W2-F15A	W1-F18A	CN602-1A	$\overline{\text{C OFF}}$	14	←				
W1-F19B	W2-F15B	W5-R27B	W6-F46B	$\overline{\text{E E}}$	15	←				
W1-F17B				$\overline{\text{AGC CP}}$	16	←				
W1-F17A	W2-F17B			$\overline{\text{C CP}}$	17	←				
				GND	18	←				
W5-R36A	W1-F13A			$\overline{\text{Y DOP}}$	19	←				
W5-R38A	W1-F14A	W6-F44A		$\overline{\text{C DOP}}$	20	←				
				GND	21	←				
CN20-15B				$\overline{\text{LOW RF}}$	22	←				
					23					
					24					
				→	25	$\overline{\text{R/P HEAD}}$	W1-R33B	W5-R42B	CN20-31B	
				→	26	GND				
				→	27	Y HEAD SW	W1-F11A	W5-F46A		
				→	28	Y AT HSW	W5-F46B			
				→	29	Y R/P HSW	W5-F47A			
				→	30	GND				
				→	31	C HEAD SW	W5-F47B	W6-F47B		
				→	32	C AT HSW	W5-F48A			
				→	33	C R/P HSW	W5-F48B			
				→	34	GND				
					35					
				→	36	Y RF	CN36-7			
				→	37	GND	CN36-8			
				→	38	$\overline{\text{PCM DET}}$	CN20-14A			
				→	39	GND				
				→	40	Y R/P PB SYNC	W5-F44B			
				→	41	Y R/P RF DET	W5-F45B			
				GND	42	GND				
				GND	43	(C PCM AT RF)	CN304-1			
				GND	44	(GND)	CN304-2			
				GND	45	C AT RF	W5-F44A			
				GND	46	GND	W5-F45A			
				GND	47	C RF	CN36-9	W6-F44B		
				GND	48	GND	CN36-10			
				GND	49	(Y PCM AT RF)	CN304-3			
				GND	50	(GND)	CN304-4			

< W4 >

FROM / TO			
CN36-2			
CN36-1			
CN24-1			
CN20-16B			
CN20-12B	CN37-2	W1-R31B	
CN20-17B	CN37-1		
CN36-3			
CN36-4			
CN36-5			
CN36-6			

W1-R
VJS2898A100

< W1 > TBC & SYCN GEN (REAR)

FROM / TO				A	NO	B	FROM / TO			
				GND	1	←				
				+7.5V	2	←				
				-7.5V	3	←				
				-11.5V	4	←				
				-11.5V	5	←				
W2-R6A				RSC	6	GND				
W2-F46A				R4SC	7	GND				
W2-R8A				$\overline{\text{LAG LP}}$	8	$\overline{\text{Y DOP 2}}$	W2-R8B			
CN40-3	W2-R9A			VIDEO G	9	$\overline{\text{LEAD LP}}$	W2-R9B			
CN40-6	W2-R10A			C G	10	$\overline{\text{FRM ON}}$	CN20-9B			
CN40-14				PR GAIN	11	PB GAIN	CN40-13			
				INRCK 2	12					
					13					
W3-R21A,B				INCOME FH	14	$\overline{\text{COMP SYNC}}$	W4-R27A	W3-R28A,B	CN30-12	
W4-R36A				LINE CF	15	COMPNT CF	W4-R36B			
CN41-7				T/C CF	16	REF CF	W2-R12B	W5-R15A	CN602-6A	
				(EXT CF)	17	(DUB CF)	CN41-13			
CN304-5				($\overline{\text{HD}}$)	18	(INCOME FRAMING)	CN37-5			
CN304-6				GND	19	GND	CN41-9			
W5-R15B				FRAMING	20					
CN20-1A	CN602-3A			R FRAMING	21	$\overline{\text{PAL SW}}$	W2-R12A			
CN41-2				$\overline{\text{R VP}}$	22	$\overline{\text{RST}}$	W2-R13B			
W2-R13A				$\overline{\text{R BLK}}$	23	$\overline{\text{R SYNC}}$	W2-R14B	CN41-1		
W2-R14A				$\overline{\text{R BF}}$	24	$\overline{\text{R HD}}$	CN41-8	CN602-2A		
				GND	25	←	CN41-9	CN601-25AB		
				($\overline{\text{S SER}}$)	26	($\overline{\text{DUB CF ON}}$)	CN20-8A			
CN20-11B				$\overline{\text{REF DET}}$	27	$\overline{\text{REF SCH}}$	CN20-10A			
W2-R19A				VSC CONT	28	$\overline{\text{STD}}$	W4-R35B	CN20-12A		
W2-R18A	CN20-10B			V PHASE 1	29	V PHASE 2	W2-R18B			
CN20-7A				CF SELECT 2	30	CF SELECT 3	CN20-7B			
CN20-8B				CF SELECT 1	31	$\overline{\text{LINE}}$	W4-F21A,B	CN20-12B	CN37-2	
CN20-5B				$\overline{\text{INT}}$	32	($\overline{\text{DUB}}$)	CN20-11A	W4-R38A		
CN20-6A				$\overline{\text{EXT}}$	33	$\overline{\text{R/P HEAD}}$	CN20-31B	W5-R42B	W3-F25A,B	
CN20-4B				$\overline{\text{ADV 2}}$	34	$\overline{\text{TAPE R/P}}$	CN20-4A			
CN20-2A				$\overline{\text{ADV 1}}$	35	SYS H PHASE	CN40-7			
CN40-8				SYS SC PHASE	36	SYS SC COARSE 2	CN40-10			
				(SCH COARSE 2)	37	SYS SC COARSE 1	CN40-9			
				(SCH COARSE 1)	38	SCH PHASE	CN40-12			
W2-R39A				D/A PR	39	GND				
				GND	40	D/A PB	W2-R41A			
				GND	41	←				
W2-R43A				D/A Y	42	GND				
				GND	43	←				
					44	GND	CN36-12	CN41-15		
				GND	45	REF VIDEO	CN36-11	CN41-14		
				+11.5V	46	←				
				+11.5V	47	←				
				+5V	48	←				
				+5V	49	←				
				GND	50	←				

W2-R
VJS2898A100

< W2 > ENCODER (REAR)

FROM / TO				A	NO	B	FROM / TO			
				GND	1	←				
				+7.5V	2	←				
				-7.5V	3	←				
				-11.5V	4	←				
				-11.5V	5	←				
W1-R6A				RSC	6	GND				
				GND	7	←				
W1-R8A				$\overline{\text{LAG LP}}$	8	$\overline{\text{Y DOP 2}}$	W1-R8B			
CN40-3	W1-R9A			VIDEO G	9	$\overline{\text{LEAD LP}}$	W1-R9B			
CN40-5	W1-R10A			C G	10					
CN49-1				SYNC G	11	BURST G	CN49-3			
W1-R21B				$\overline{\text{PAL SW}}$	12	REF CF	W1-R16B	W5-R15A	CN602-6A	
W1-R23A				$\overline{\text{R BLK}}$	13	$\overline{\text{RST}}$	W1-R22B			
W1-R24A				$\overline{\text{R BF}}$	14	$\overline{\text{R SYNC}}$	W1-R23B	CN41-1		
CN602-1B				$\overline{\text{ID OFF}}$	15	$\overline{\text{CHARACTOR GATE}}$	CN41-11			
CN41-10				$\overline{\text{CHARACTOR}}$	16	GND	CN41-12			
CN41-12				GND	17	←				
W1-R29A	CN20-10B			V PHASE 1	18	V PHASE 2	W1-R29B			
W1-R28A				VSC CONT	19					
CN40-6				HUE	20	SET UP	CN40-4			
					21					
					22					
CN42-1				Y/C C	23	GND				
CN42-2				GND	24	GND				
CN42-3				VIDEO 3	25	GND				
CN42-4				GND	26	GND				
CN42-5				VIDEO 2	27	GND				
CN42-6				GND	28	GND				
CN42-7				VIDEO 1	29	GND				
CN42-8				GND	30	GND				
CN42-9				Y	31	GND				
CN42-10				GND	32	GND				
CN42-11				PB	33	GND				
CN42-12				GND	34	GND				
CN42-13				PR	35	GND				
CN42-14				GND	36	GND				
				GND	37	GND				
				GND	38	GND				
W1-R39A				D/A PR	39	GND				
				GND	40	GND				
W1-R40B				D/A PB	41	GND				
				GND	42	GND				
W1-R42A				D/A Y	43	GND				
				GND	44	GND				
				GND	45	GND				
CN42-15				+11.5V	46	←				
				+11.5V	47	←				
				+5V	48	←				
				+5V	49	←				
				GND	50	←				

W3-R
VJS2898A100

< W3 > MOD & DEMOD (REAR)

FROM / TO				A	NO	B	FROM / TO			
				GND	1	←				
				+7.5V	2	←				
				-7.5V	3	←				
				-11.5V	4	←				
				-11.5V	5	←				
				GND	6	←				
CN39-3				Y R/P CH1 RF	7	←				
CN39-6				Y R/P CH2 RF	8	←				
CN39-4,5				GND	9	←				
CN302-1				(Y AT CH1 RF)	10	←				
CN302-4				(Y AT CH2 RF)	11	←				
CN302-2,3				(GND)	12	←				
CN39-9				C R/P CH1 RF	13	←				
CN39-12				C R/P CH2 RF	14	←				
CN39-10,11				GND	15	←				
CN302-8				(C AT CH1 RF)	16	←				
CN302-11				(C AT CH2 RF)	17	←				
CN302-9,10				(GND)	18	←				
					19					
					20					
W1-R14A				INCOME FH	21	←				
				GND	22	←				
W4-R23A				Y	23	←				
CN30-8				GND	24	←				
CN30-9				$\overline{\text{REC VITC}}$	25	←				
CN30-10				$\overline{\text{VITC}}$	26	←				
CN30-11				GND	27	←				
CN30-12	W1-R14B	W4-R27A		$\overline{\text{COMP SYNC}}$	28	←				
CN20-16A	W1-F18B	W4-R38B	W6-F32A	$\overline{\text{VIDEO IN}}$	29	←				
CN24-2				METER	30	←				
W5-R27A				$\overline{\text{MOD}}$	31	←				
				GND	32	←				
CN39-1				Y FM	33	←				
CN39-2				GND	34	←				
CN39-8				GND	35	←				
CN39-7				C FM	36	←				
				GND	37	←				
W6-F42B				FM AUDIO	38	←				
				GND	39	←				
					40					
				GND	41	←				
W4-F37B				C CLAMP	42	←				
				GND	43	←				
W4-R44A				CTCM	44	←				
				GND	45	←				
				+11.5V	46	←				
				+11.5V	47	←				
				+5V	48	←				
				+5V	49	←				
				GND	50	←				

< W4 >

FROM / TO			
CN48-1			
CN48-2			
CN48-3			
CN48-4			
CN48-5			
CN48-6			
CN48-7			
CN48-8			
CN48-9			
CN48-10			
W3-R23A,B			
CN30-12	W1-R14B	W3-R28A,B	
CN30-11			
W5-R25A			
W5-R26A			
CN30-11			
CN20-18A			
CN20-18B	W5-R13A		
W1-R15A			
CN30-13			
CN20-11A	W1-R32B		
CN37-7			
CN37-6			
W3-R44A,B			
CN302-5			
CN302-6			
CN302-7			

W0 (W,MOTHER) SCHEMATIC DIAGRAM 4/4

16 | 1 | 2 | 3 | 4 | 5 | 6 | 7 | 8 | 9 | 10 | 11 | 12 | 13 | 14 | 15 | 16

FROM / TO	
W5-R42B	CN20-31B
W5-F46A	
W6-F47B	
W6-F44B	

W4-F
VJS2898A100 (AU-65/665 ONLY)

< W4 > DEC & CTCM (FRONT)

FROM / TO				A	NO	B	FROM / TO			
				GND	1	←				
				+5V	2	←				
				+5V	3	←				
				+11.5V	4	←				
				+11.5V	5	←				
				GND	6	←				
				GND	7	←				
				GND	8	←				
				GND	9	←				
				GND	10	←				
					11					
CN36-2				GND	12	GND				
CN36-1				LINE	13	GND				
				LINE	14	GND				
					15					
					16					
					17					
				GND	18	←				
CN24-1				LEVEL CONT	19	←				
CN20-16B				VISC ON	20	←				
CN20-12B	CN37-2	W1-R31B		LINE	21	←				
CN20-17B	CN37-1			Y/C	22	←				
				GND	23	←				
					24					
					25					
					26					
					27					
					28					
					29					
					30					
					31					
					32					
					33					
					34					
					35					
					36					
				GND	37	GND				
CN36-3				4P Y	38	GND				
CN36-4				GND	39	GND				
CN36-5				4P C	40	GND				
CN36-6				GND	41	GND				
				GND	42	GND				
				GND	43	GND				
				GND	44	GND				
				GND	45	GND				
				GND	46	GND				
				GND	47	GND				
				GND	48	GND				
				GND	49	GND				
				GND	50	GND				

W5-F
VJS2898A100

< W5 > SERVO & DRIVE & AT (FRONT)

FROM / TO				A	NO	B	FROM / TO			
				GND	1	←				
				+5V	2	←				
				+5V	3	←				
				+11.5V	4	←				
				+11.5V	5	←				
CN15-2				S TENSION	6	T TENSION	CN15-3			
CN15-1				TENSION VCC	7	TENSION GND	CN15-4			
				UNREG GND	8	←				
CN15-5				S M1	9	←				
CN15-6				S H1-	10	S H1+	CN15-7			
CN15-8				S M2	11	←				
CN15-9				S VH+	12	←				
CN15-10				S H2-	13	S H2+	CN15-11			
CN15-12				S M3	14	←				
CN15-14				S VH-	15	←				
CN15-13				S H3-	16	S H3+	CN15-15			
CN14-1				T M1	17	←				
CN14-2				T H1-	18	T H1+	CN14-3			
CN14-4				T M2	19	←				
CN14-5				T VH+	20	←				
CN14-6				T H2-	21	T H2+	CN14-7			
CN14-8				T M3	22	←				
CN14-10				T VH-	23	←				
CN14-9				T H3-	24	T H3+	CN14-11			
				UNREG GND	25	←				
CN13-1				C M2	26	←				
CN13-2				C H2-	27	C H1+	CN13-3			
CN13-5				C M3	28	←				
CN13-4				C H2+	29	C H3-	CN13-6			
CN13-7				C VH-	30	←				
CN13-9				C VH+	31	←				
CN13-8				C H3+	32	C H1-	CN13-11			
CN13-10				C M1	33	←				
				UNREG GND	34	←				
CN12-1				D H1+	35	D H1-	CN12-2			
CN12-3				D H2+	36	D H2-	CN12-4			
CN12-5				D H3-	37	D H3+	CN12-6			
CN12-7				D M2	38	←				
CN12-8				D M1	39	←				
CN12-9				D M3	40	←				
CN12-10				D VH-	41	←				
CN12-11				D VH+	42	←				
				UNREG GND	43	←				
W3-F45B				C AT RF	44	Y R/P PB SYNC	W3-F40A,B			
W3-F46B				GND	45	Y R/P RF DET	W3-F41A,B			
W3-F27A,B	W1-F11A			Y HEAD SW	46	Y AT HSW	W3-F28A,B			
W3-F29A,B				Y R/P HSW	47	C HEAD SW	W3-F31A,B	W6-F47B		
W3-F32A,B				C AT HSW	48	C R/P HSW	W3-F33A,B			
W1-F15B	CN41-4	W2-F18A		Y PB SYNC	49	C PB SYNC	W1-F16B	W2-F18B		
				GND	50	←				

W6-F
VJS2898A100

< W6 > AUDIO (FRONT)

FROM / TO				A	NO	B	FROM / TO			
CN402-4				GND	1	←				
CN402-3				+5V	2	←				
				+5V	3	←				
				+11.5V	4	←				
				+11.5V	5	←				
CN20-32A				TCG/TCR ON	6	TC DETECT	CN20-23B			
CN402-1				CUE REC	7	CUE	CN402-2			
CN21-3				TCR PB	8	TCR EXT	CN21-1			
CN21-2,5				TC GND	9	TCG/TCR	CN21-4			
CN22-3				EXT TC OUT	10	EXT TC IN	CN22-1			
CN22-4				TC GND	11	TC GND	CN22-2			
				GND	12	GND				
					13	TC EE	CN21-6			
					14					
					15					
					16					
					17					
					18					
					19					
					20					
					21					
					22					
					23					
					24					
					25					
					26					
					27					
					28					
					29					
					30					
				GND	31	GND				
W1-F18B	W3-R29A,B	W4-R38B	CN20-16A	FM MUT	32					
				GND	33	GND				
CN26-2,5				GND	34	CH3 REC VR ⊖	CN26-1			
CN26-4				CH3 PB VR ⊕	35	CH3 PB VR ⊖	CN26-3			
CN26-12	CN28-2			GND	36	CH3 LINE	CN26-11	CN28-1		
				GND	37	GND				
CN26-7,10				GND	38	CH4 REC VR ⊖	CN26-6			
CN26-9				CH4 PB VR ⊕	39	CH4 PB VR ⊖	CN26-8			
CN26-14	CN28-4			GND	40	CH4 LINE	CN26-13	CN28-3		
				GND	41	GND				
				GND	42	FM AUDIO	W3-R38A,			
				GND	43	GND				
W1-F14A	W3-F20A,B	W5-R38A		C DOP	44	C RF	W3-F47B	CN36-9		
				GND	45	GND				
W5-R19B	CN31-7			REC RELAY	46	E E	W1-F19B	W2-F15B	W3-F15A,B	W5-R27
				GND	47	C HEAD SW	W5-F47B	W3-F31A,B		
W5-R9B	CN20-29B	CN46-4		SERIAL CLK	48	SERIAL DATA AUD/FM ATT	CN20-26B			
W5-R10B	CN20-28A	CN46-5		STRB CLK 16	49					
				GND	50	←				

W4-R
VJS2898A100 (AU-65/665 ONLY)

< W4 > DEC & CTCM (REAR)

FROM / TO				A	NO	B	FROM / TO			
				GND	1	←				
CN48-1				+7.5V	2	←				
CN48-2				-7.5V	3	←				
CN48-3				-11.5V	4	←				
				-11.5V	5	←				
CN48-4				GND	6	GND				
CN48-5				BNC Y	7	GND				
CN48-6				GND	8	GND				
CN48-7				BNC PB	9	GND				
CN48-8				GND	10	GND				
CN48-9				BNC PR	11	GND				
CN48-10				GND	12	GND				
					13	GND				
				GND	14	GND				
					15	GND				
				GND	16	GND				
					17	GND				
				GND	18	GND				
					19	GND				
					20					
					21	GND				
				GND	22	GND				
W3-R23A,B				Y	23	GND				
				GND	24	GND				
					25	GND				
					26	GND				
CN30-12	W1-R14B	W3-R28A,B		COMP SYNC	27	GND				
CN30-11				GND	28	GND				
W5-R25A				(DUB Y DOP)	29	GND				
W5-R26A				(DUB C DOP)	30	GND				
					31					
					32					
CN30-11				GND	33	GND				
CN20-18A				IN SCH	34	N-STD AUTO	CN20-17A			
CN20-18B	W6-R13A			CPNT CF ON	35	STD	CN20-12A	W1-R28B		
W1-R15A				LINE CF	36	COMPNT CF	W1-R15B			
CN30-13				VP REC	37	C CLAMP	W3-R42A,B			
CN20-11A	W1-R32B			(DUB)	38	VIDEO IN	W3-R29A,B	CN20-16A	W1-F18B	W6-F32A
					39					
					40					
				GND	41	GND				
CN37-7				(DUB CTCM)	42	GND				
CN37-6				GND	43	GND				
W3-R44A,B				CTCM	44	GND				
				GND	45	GND				
CN302-5				+14.5V	46	←				
CN302-6				+11.5V	47	←				
				+5V	48	←				
				+5V	49	←				
CN302-7				GND	50	←				

W5-R
VJS2898A100

< W5 > SERVO & DRIVE & AT (REAR)

FROM / TO				A	NO	B	FROM / TO			
CN30-2	CN31-4			GND	1	←	CN30-4			
CN31-3	CN30-5			+7.5V	2	←				
CN31-6	CN30-6	CN46-2		-7.5V	3	←				
CN35-8				-11.5V	4	←				
CN31-5	CN40-2			-14.5V	5	←				
CN35-10,11				UNREG GND	6	←				
CN20-30A				S FRAMING	7	+24V				
CN30-1				CAP MAIN CLK	8	CAP OSC	CN30-3			
CN20-27A				SERIAL DATA CAP	9	SERIAL CLK	CN20-29B	W6-F48A	CN46-4	
CN20-25A				SERIAL DATA REL	10	STRB CLK 16	CN20-28A	W6-F49A	CN46-5	
CN20-26A				SERIAL DATA DRM	11	STRB CLK 8	CN20-28B			
CN20-24A				SERIAL DATA TIM	12	SERIAL DATA SRV	CN20-27B			
CN600-3				S REEL PULSE 1	13	T REEL PULSE 1	CN600-1			
CN30-7				TR FG 1	14	TR FG 2	CN20-21B			
W1-R16B	W2-R12B	CN602-6A		REF CF	15	FRAMING	W1-R20A			
CN20-30B				FRAMING /2	16	FRAMING /4	CN20-29A			
CN24-4				TRACKING +	17	CAP FWD	CN20-23A			
CN24-3				TRACKING -	18	CTL PULSE	CN20-31A			
CN31-8	CN20-24B			RE START	19	REC RELAY	CN31-7	W6-F46A		
CN31-9				RE CH1 SW	20	RE CH2 SW	CN31-10			
CN31-12				Y CH1 REC SW	21	C CH1 REC SW	CN31-14			
CN31-13				Y CH2 REC SW	22	C CH2 REC SW	CN31-15			
CN300-1				(Y CH1 PCM GATE)	23	(C CH1 PCM GATE)	CN300-4			
CN300-2				(Y CH2 PCM GATE)	24	(C CH2 PCM GATE)	CN300-5			
W4-29A				(DUB Y DOP)	25	(PCM HSW)	CN301-1			
W4-30A				(DUB C DOP)	26	(PCM GATE)	CN301-2			
W3-R31A,B				MOD	27	E E	W6-F46B	W2-F15B	W1-F19B	W3-F15A,B
CN600-3				CAP OVERRIDE	28	DRUM FG	CN17-1			
CN300-3,6	CN301-3			GND	29	GND	CN17-2			
CN17-5				CAP V FG +	30	DRUM PG +	CN17-3			
CN17-6				CAP FG 1	31	DRUM PG -	CN17-4			
CN17-7				GND	32	CTL GND	CN8-2			
CN17-8				CAP FG 2	33	CTL HEAD	CN8-1			
				GND	34	CTL GND	CN8-2			
W1-F12B				PB FRAMING 2	35	(STILL POS F)	CN34-1			
W1-F13A	W3-F19A,B			Y DOP	36	(STILL POS R)	CN34-2			
				GND	37	(AT AK)	CN34-3			
W1-F14A	W3-F20A,B	W6-F44A		C DOP	38	PINCH ON	CN20-32B			
W1-F9B				H CONT 4	39	(AT ON)	CN34-4			
W1-F9A				H CONT 3	40	(NORMAL)	CN34-5			
W1-F10B				H CONT 2	41	(AT EJECT)	CN34-6			
W1-F10A				H CONT 1	42	R/P HAED	W1-R33B	W3-F25A,B	CN20-31B	
CN35-1				(HV MONI)	43	(HV ON)	CN35-2			
CN35-3				(AT PATTERN A)	44	(AT PATTERN B)	CN35-5			
CN35-4				GND	45	←	CN35-6			
CN31-1	CN35-7	CN40-1		+14.5V	46	←				
CN31-2	CN35-9			+11.5V	47	←				
				+5V	48	←				
				+5V	49	←				
				GND	50	←				

W6-R
VJS2898A100

< W6 > AUDIO (REAR)

FROM / TO				A	NO	B	FROM / TO			
				GND	1	←				
				+7.5V	2	←				
				-7.5V	3	←				
				-11.5V	4	←				
CN25-1				-14.5V	5	←				
CN25-2				UNREG GND	6	←				
CN25-3				+24V	7	←				
				GND	8	GND				
CN9-1				F/E HEAD ⊕	9	F/E HEAD ⊖	CN9-2			
CN9-3				F/E HEAD GND	10	←				
				GND	11	GND				
CN20-19A	CN37-4			HI SPEED ATT 1	12	DOLBY SW	CN46-8			
CN20-18B	W4-R35A			HI SPEED ATT 2	13	LOADING MUT	CN20-22B			
				GND	14	GND				
					15					
					16					
					17					
					18					
					19					
					20					
					21					
					22					
					23					
					24					
					25					
					26					
					27					
				GND	28	GND				
CN400-2				GND	29	CH2 DECODE IN	CN400-1			
				GND	30	CH2 DECODE OUT	CN400-3			
CN400-5				GND	31	CH2 ENCODE IN	CN400-4			
				GND	32	CH2 ENCODE OUT	CN400-6			
CN24-6,9				GND	33	CH2 REC VR ⊖	CN24-5			
CN24-8				CH2 PB VR ⊕	34	CH2 PB VR ⊖	CN24-7			
CN23-2	CN25-5			GND	35	CH2 LINE	CN25-4	CN23-1		
CN23-3	CN25-6			AUDIO MUT	36	CH2 E-E	CN401-1			
CN401-3				EXT NR OUT	37	CH1 E-E	CN401-2			
CN46-12				EXT NR ON	38	CH1 DECODE IN	CN401-4			
CN401-5				GND	39	CH1 DECODE OUT	CN401-6			
CN401-8				GND	40	CH1 ENCODE IN	CN401-7			
				GND	41	CH1 ENCODE OUT	CN401-9			
CN24-11,14				GND	42	CH1 REC VR ⊖	CN24-10			
CN24-13				CH1 PB VR ⊕	43	CH1 PB VR ⊖	CN24-12			
CN23-5	CN25-8			GND	44	CH1 LINE	CN25-7	CN23-4		
				GND	45	←				
CN303-1	CN25-9			+14.5V	46	←	CN25-9			
CN303-2				+11.5V	47	←				
				+5V	48	←				
				+5V	49	←				
CN303-3				GND	50	←	CN25-10			

MODEL TYPE	AU-665	AU-65	AU-63	AU-62
NTSC	See Page 5-2-9	VEP88062A	VEP88062A	VEP88062A
PAL	———	VEP88062C	VEP88062C	VEP88062C

W1 (TBC & SYNC GEN) SCHEMATIC DIAGRAM 1/6 [FOR AU-65, AU-63, AU-62]

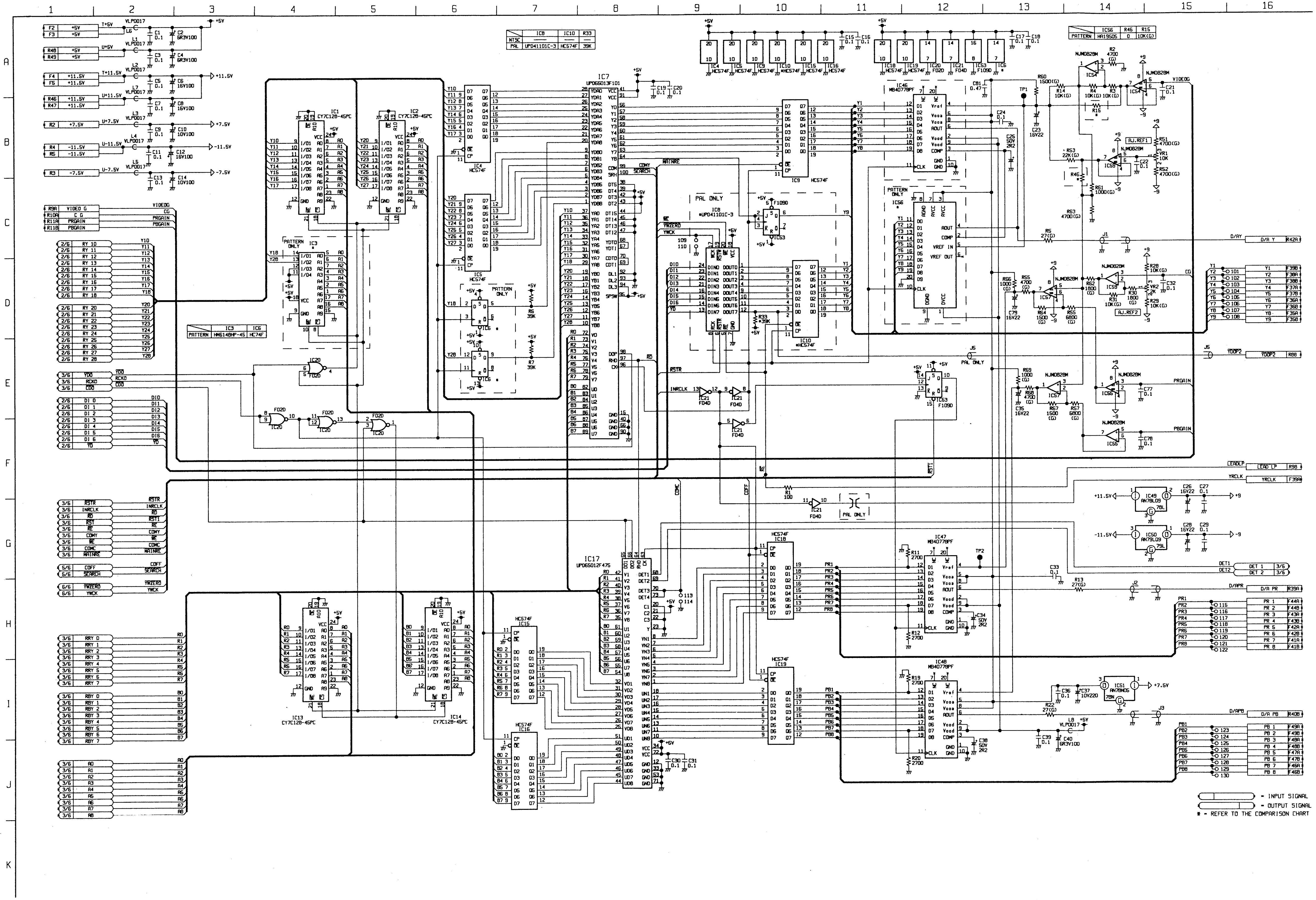

1
2
3
4
5
6
7
8
9
10
11
12
13
14
15
16
A
B
C
D
E
F
G
H
I
J
K
IC1 CY7C128-45PC
IC2 CY7C128-45PC
IC3
IC4 HC574F
IC5 HC574F
IC6
IC7 UPD66013F101
IC8 ＊UPD41101C-3
IC9 HC574F
IC10 ＊HC574F
IC13 CY7C128-45PC
IC14 CY7C128-45PC
IC15 HC574F
IC16 HC574F
IC17 UPD65012F475
IC18 HC574F
IC19 HC574F
IC20 F020
IC21 F040
IC46 MB40778PF
IC47 MB40778PF
IC48 MB40778PF
IC49 AN78L09
IC50 AN79L09
IC51 AN78M05
IC53 F1090
IC54 NJM082BM
IC55 NJM082BM
IC56 HA19505
IC57 NJM082BM
PATTERN ONLY
PAL ONLY
VIDEOG
PRGAIN
PBGAIN
D/A Y
D/A PR
D/A PB
TOOP2
LEAD LP
YRCLK
DET 1
DET 2
+11.5V
-11.5V
+7.5V
-7.5V
+5V
+9
-9
TP1
TP2
J1
J2
J3
J5
= INPUT SIGNAL
= OUTPUT SIGNAL
＊ = REFER TO THE COMPARISON CHART

REVERSE SIDE **W. MOTHER SCHEMATIC DIAGRAM**

W1 (TBC & SYNC GEN) SCHEMATIC DIAGRAM 2/6 [FOR AU-65, AU-63, AU-62]

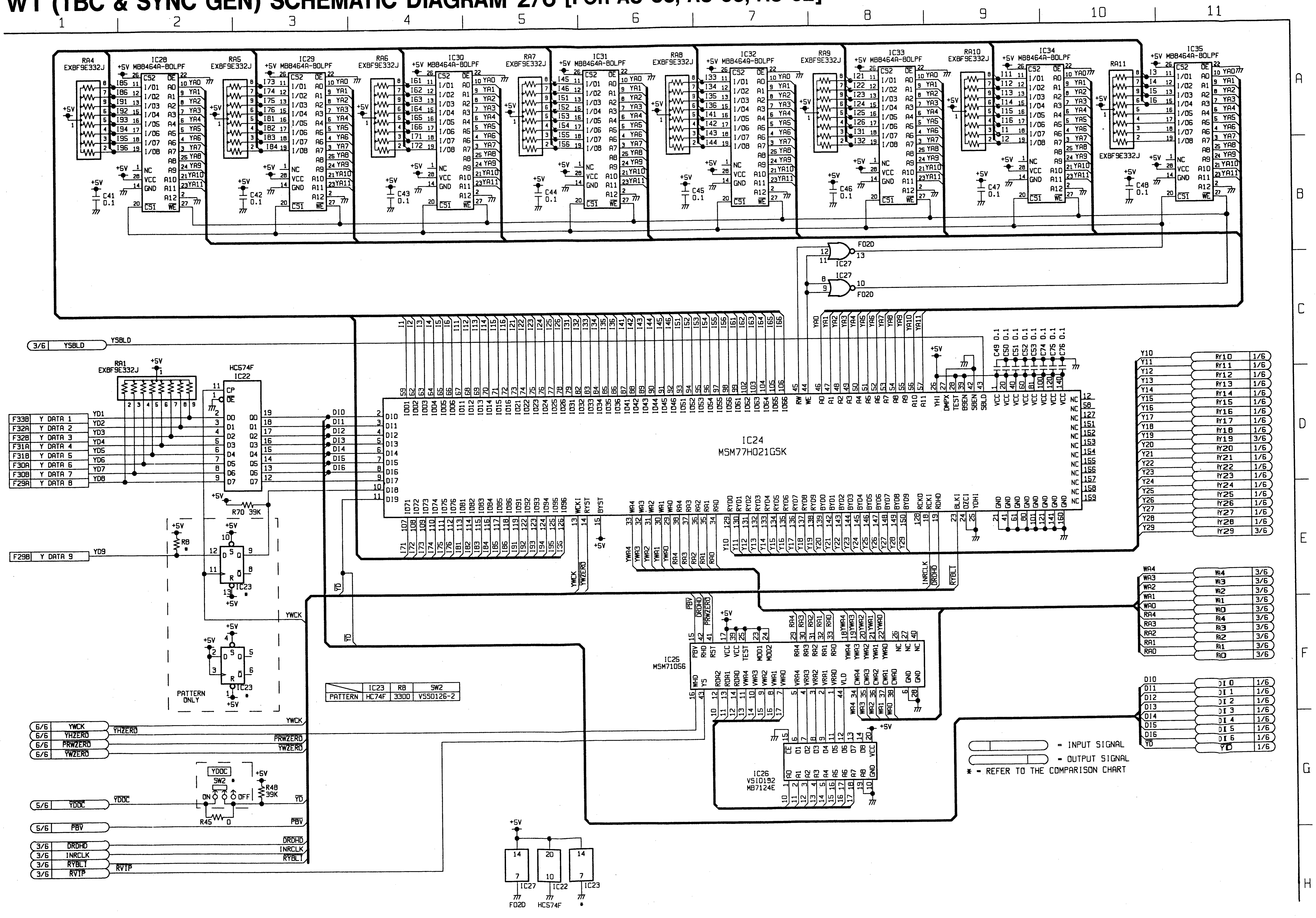

1
2
3
4
5
6
7
8
9
10
11
A
B
C
D
E
F
G
H
RA4 EXBF9E332J
IC28 MB8464A-80LPF
RA5 EXBF9E332J
IC29 MB8464A-80LPF
RA6 EXBF9E332J
IC30 MB8464A-80LPF
RA7 EXBF9E332J
IC31 MB8464A-80LPF
RA8 EXBF9E332J
IC32 MB8464A-80LPF
RA9 EXBF9E332J
IC33 MB8464A-80LPF
RA10 EXBF9E332J
IC34 MB8464A-80LPF
RA11 EXBF9E332J
IC35 MB8464A-80LPF
C41 0.1
C42 0.1
C43 0.1
C44 0.1
C45 0.1
C46 0.1
C47 0.1
C48 0.1
+5V
IC27 F02D
3/6 YSBLD
RA1 EXBF9E332J
HC574F IC22
F33B Y DATA 1
F32A Y DATA 2
F32B Y DATA 3
F31A Y DATA 4
F31B Y DATA 5
F30A Y DATA 6
F30B Y DATA 7
F29A Y DATA 8
F29B Y DATA 9
R70 39K
R8 *
IC23 *
PATTERN ONLY
IC24 MSM77H021GSK
C49 0.1
C50 0.1
C51 0.1
C52 0.1
C53 0.1
C74 0.1
C75 0.1
C76 0.1
IC25 MSM71056
IC26 VS10192 MB7124E
YWCK
YWZERO
INRCLK
DRDHD
RYBLT
6/6 YWCK
6/6 YHZERO
6/6 PRWZERO
6/6 YWZERO
YDOC
SW2 *
ON
OFF
R48 39K
R45 0
5/6 YDOC
5/6 PBV
3/6 DRDHD
3/6 INRCLK
3/6 RYBLT
3/6 RVIP
IC27 F02D
IC22 HC574F
IC23 *
RY10 1/6
RY11 1/6
RY12 1/6
RY13 1/6
RY14 1/6
RY15 1/6
RY16 1/6
RY17 1/6
RY18 1/6
RY19 3/6
RY20 1/6
RY21 1/6
RY22 1/6
RY23 1/6
RY24 1/6
RY25 1/6
RY26 1/6
RY27 1/6
RY28 1/6
RY29 3/6
WA4 3/6
WA3 3/6
WA2 3/6
WA1 3/6
WA0 3/6
RA4 3/6
RA3 3/6
RA2 3/6
RA1 3/6
RA0 3/6
DI 0 1/6
DI 1 1/6
DI 2 1/6
DI 3 1/6
DI 4 1/6
DI 5 1/6
DI 6 1/6
YD 1/6
= INPUT SIGNAL
= OUTPUT SIGNAL
* = REFER TO THE COMPARISON CHART

	IC23	R8	SW2
PATTERN	HC74F	3300	VS50126-2

MODEL TYPE	AU-665	AU-65	AU-63	AU-62
NTSC	See Page 5-2-9	VEP88062A	VEP88062A	VEP88062A
PAL	———	VEP88062C	VEP88062C	VEP88062C

W1 (TBC & SYNC GEN) SCHEMATIC DIAGRAM 3/6 [FOR AU-65, AU-63, AU-62]

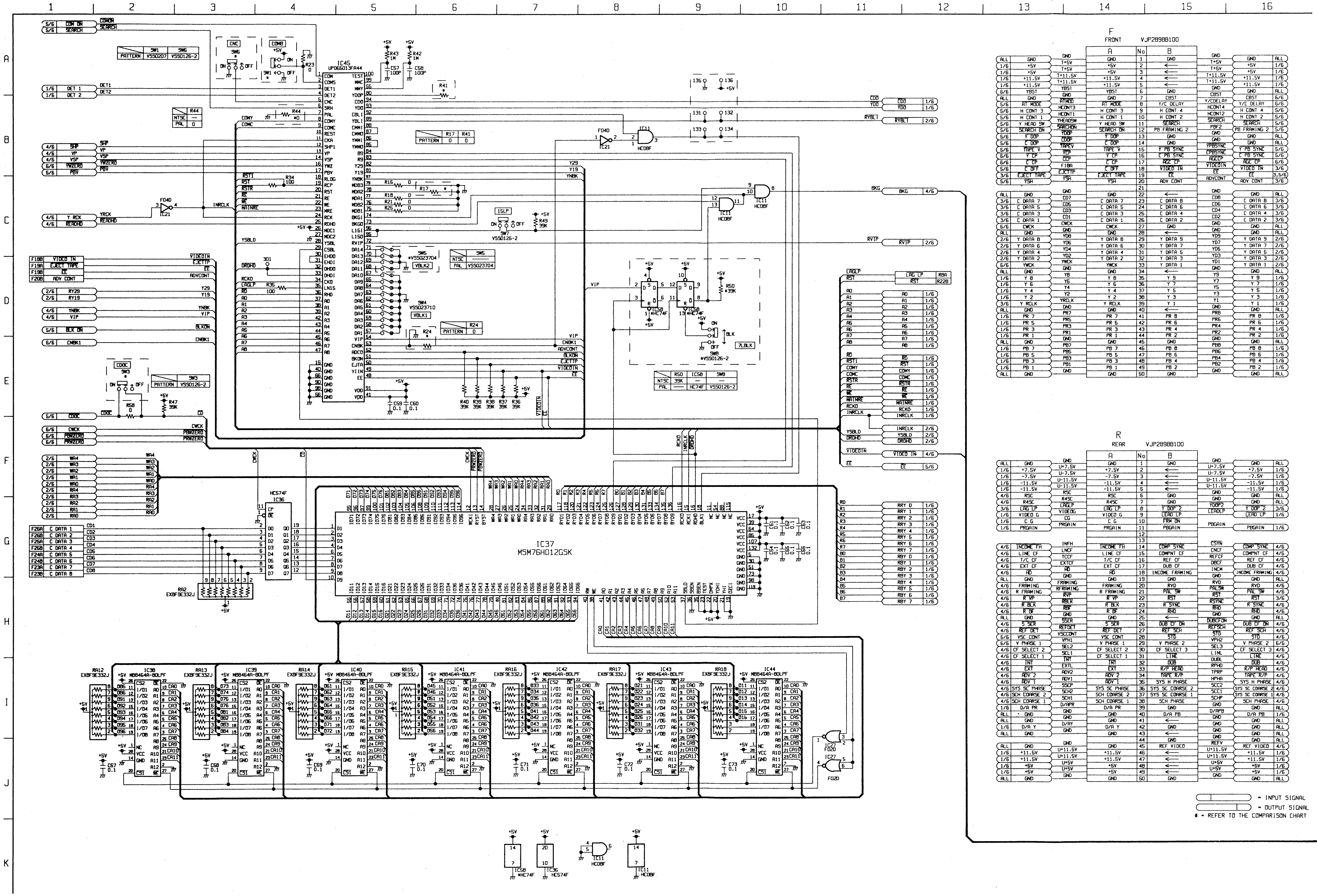

IC45
UPD6013FR44
IC37
MSM76HD12GSK
HC574F
IC36
IC38 MB8464A-80LPF
IC39 MB8464A-80LPF
IC40 MB8464A-80LPF
IC41 MB8464A-80LPF
IC42 MB8464A-80LPF
IC43 MB8464A-80LPF
IC44 MB8464A-80LPF
RA12 EXBF9E332J
RA13 EXBF9E332J
RA14 EXBF9E332J
RA15 EXBF9E332J
RA16 EXBF9E332J
RA17 EXBF9E332J
RA18 EXBF9E332J
RA2 EXBF9E332J
IC11 HC08F
IC21
IC58 *HC74F
IC27
F FRONT VJP28988100
R REAR VJP28988100
SW1 SW6 PATTERN VSS0207 VSS0126-2
SW3 PATTERN VSS0126-2
SW5 NTSC *VSS023704 PAL VSS023704
SW4 VSS023710
SW7 VSS0126-2
SW8 *VSS0126-2
R50 C58 SW8 NTSC PAL HC74F VSS0126-2
= INPUT SIGNAL
= OUTPUT SIGNAL
* = REFER TO THE COMPARISON CHART

W1 (TBC & SYNC GEN) SCHEMATIC DIAGRAM 4/6 [FOR AU-65, AU-63, AU-62]

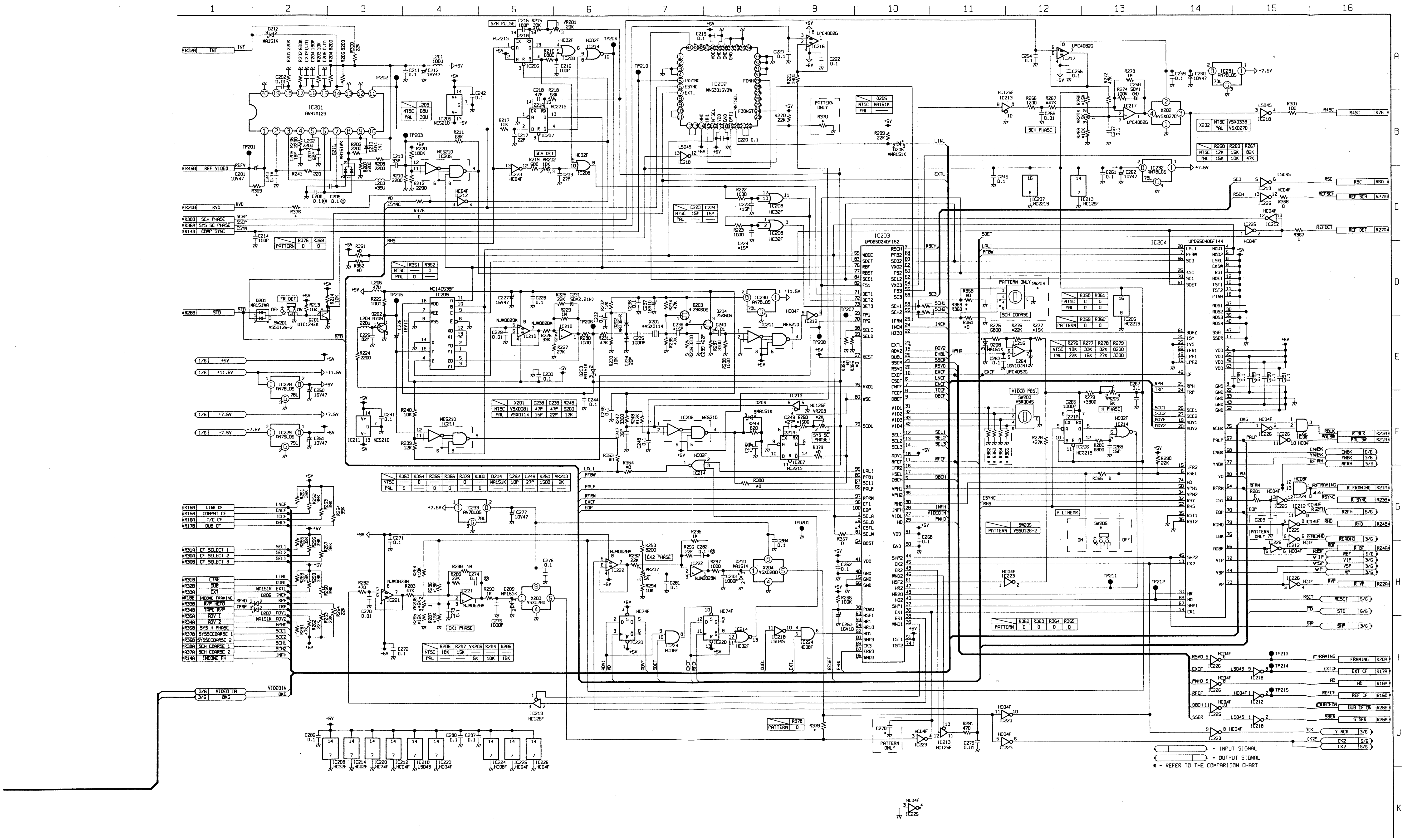
IC201 AN91A125
IC202 MN53015VZW
IC203 UPD65024GF152
IC204 UPD65040GF144
IC209 MC14053BF
IC216 UPC4082G
IC217 UPC4082G
IC231 AN78L05
IC232 AN78L05
IC228 AN78L09
IC229 AN79L05
IC233 AN78L09
SW201 VSS0126-2
SW204 PATTERN ONLY
SW205
X201
X202
X203 VSX0280
X204 VSX0280
INT
REF VIDEO
RVD
5CH PHASE
SYS SC PHASE
COMP SYNC
STD
+5V
+11.5V
+9V
+7.5V
-7.5V
LINE CF
COMPNT CF
TC CF
DUB CF
CF SELECT 1
CF SELECT 2
CF SELECT 3
LINE
DUB
EXT
INCOME FRAMING
R/P HEAD
TAPE R/P
ADV 1
ADV 2
SYS H PHASE
SYSSCCOARSE 1
SYSSCCOARSE 2
SCH COARSE 1
SCH COARSE 2
INCOME FH
VIDEO IN
BKG
R4SC
RSC
REF SCH
REF DET
R BLK
PAL SW
CNBK
YNBK
RFRM
R FRAMING
R SYNC
R2FH
RHD
READHD
RBF
VIP
VSP
VP
R VP
RESET
STD
SHP
FRAMING
EXT CF
RD
REF CF
DUB CF ON
S SER
Y RCK
CK2
PATTERN ONLY
H LINEAR
VIDEO POS.
SCH COARSE
SCH PHASE
SCH DET
CK1 PHASE
CK2 PHASE
FR DET
SYS SC PHASE
H PHASE
1 2 3 4 5 6 7 8 9 10 11 12 13 14 15 16
A B C D E F G H I J K

▭ = INPUT SIGNAL
▭ = OUTPUT SIGNAL
* = REFER TO THE COMPARISON CHART

MODEL / TYPE	AU-665	AU-65	AU-63	AU-62
NTSC	See Page 5-2-9	VEP88062A	VEP88062A	VEP88062A
PAL	———	VEP88062C	VEP88062C	VEP88062C

W1 (TBC & SYNC GEN) SCHEMATIC DIAGRAM 5/6 [FOR AU-65, AU-63, AU-62]

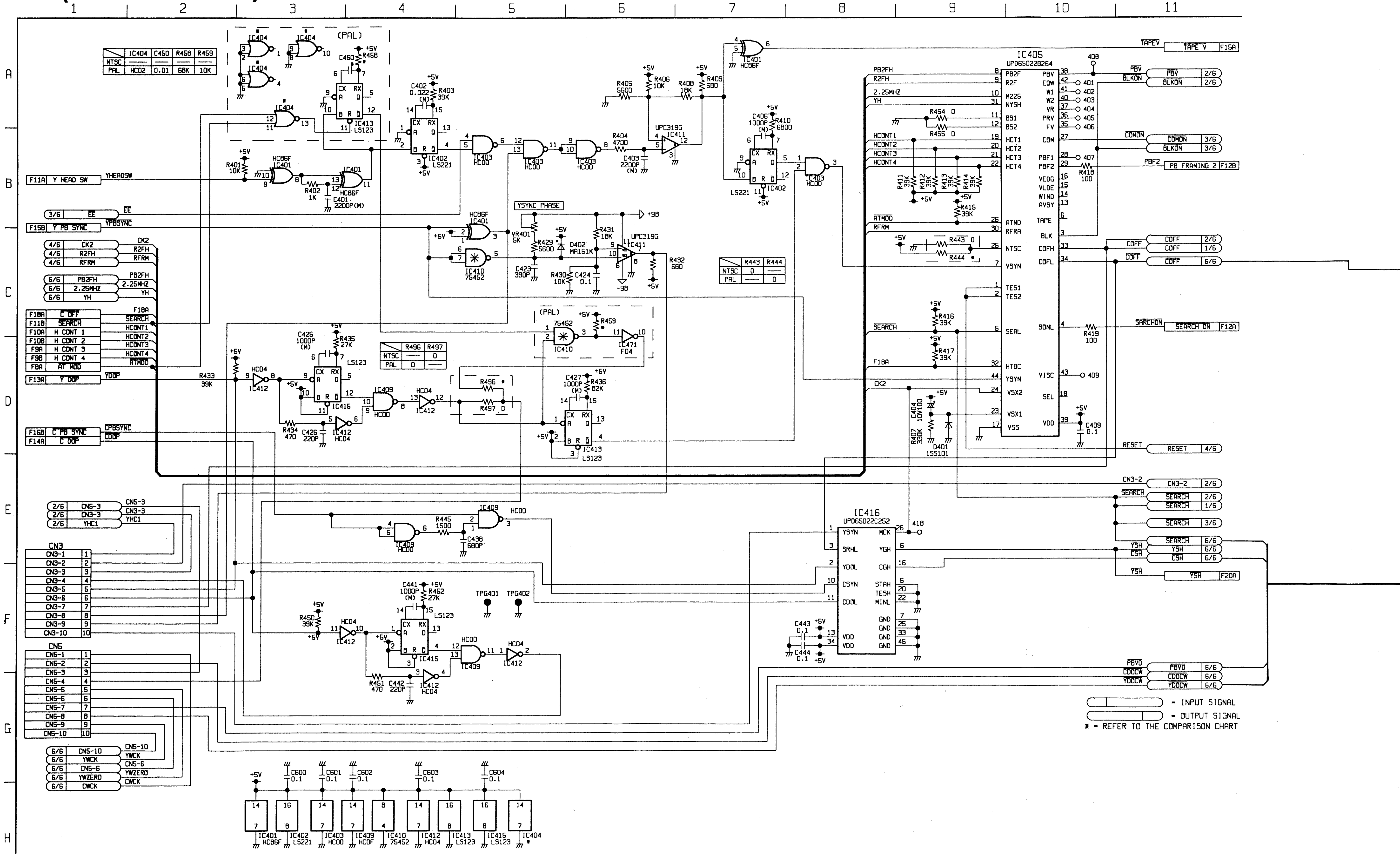

1
2
3
4
5
6
7
8
9
10
11
A
B
C
D
E
F
G
H
(PAL)
IC404
IC401 HC86F
IC402 LS221
IC403 HC00
IC405 UPD65022B264
IC409 HC00
IC410 75452
IC411 UPC319G
IC412 HC04
IC413 LS123
IC415 LS123
IC416 UPD65022C252
IC471 F04
D401 1SS101
D402 MA151K
YSYNC PHASE
VR401 5K
F11A Y HEAD SW
YHEADSW
3/6 EE
F15B Y PB SYNC
YPBSYNC
4/6 CK2
4/6 R2FH
4/6 RFRM
6/6 PB2FH
6/6 2.25MHZ
6/6 YH
F18A C OFF
F11B SEARCH
F10A H CONT 1
F10B H CONT 2
F9A H CONT 3
F9B H CONT 4
F8A AT MOD
F13A Y DOP
F16B C PB SYNC
F14A C DOP
CPBSYNC
CDOP
2/6 CN5-3
2/6 CN3-3
2/6 YHC1
CN3
CN5
6/6 CN5-10
6/6 YWCK
6/6 CN5-6
6/6 YWZERO
6/6 CWCK
TPG401
TPG402
TAPE V F15A
PBV 2/6
BLKON 2/6
COMON 3/6
BLKON 3/6
PB FRAMING 2 F12B
COFF 2/6
COFF 1/6
COFF 6/6
SEARCH ON F12A
RESET 4/6
CN3-2 2/6
SEARCH 2/6
SEARCH 1/6
SEARCH 3/6
SEARCH 6/6
YSH 6/6
CSH 6/6
YSH F20A
PBVD 6/6
CDDCW 6/6
YDDCW 6/6
+5V
+9B
-9B
IC401 HC86F
IC402 LS221
IC403 HC00
IC409 HC0F
IC410 75452
IC412 HC04
IC413 LS123
IC415 LS123
IC404 *

	IC404	C450	R458	R459
NTSC	———	———	———	———
PAL	HC02	0.01	68K	10K

	R443	R444
NTSC	0	———
PAL	———	0

	R496	R497
NTSC	———	0
PAL	0	———

- INPUT SIGNAL
- OUTPUT SIGNAL
* - REFER TO THE COMPARISON CHART

REVERSE SIDE TBC & SYNC GEN SCHEMATIC DIAGRAM

W1 (TBC & SYNC GEN) SCHEMATIC DIAGRAM 6/6 [FOR AU-65, AU-63, AU-62]

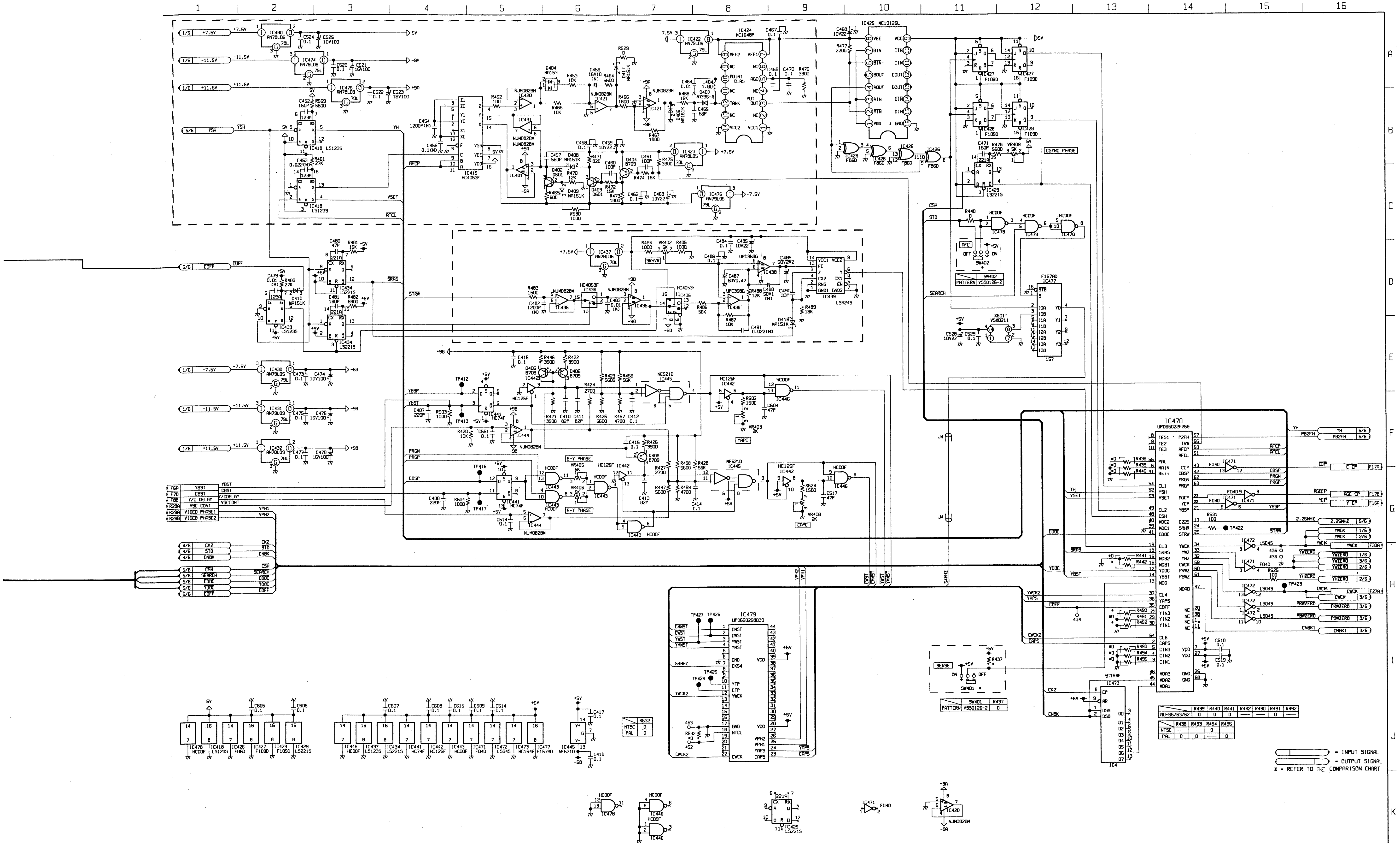
1
2
3
4
5
6
7
8
9
10
11
12
13
14
15
16
A
B
C
D
E
F
G
H
I
J
K
IC480 AN78L05
IC474 AN79L09
IC475 AN78L09
IC418 LS123S
IC419 HC4053F
IC420 NJM082BM
IC421
IC422 AN79L05
IC423 AN78L05
IC424 MC1648P
IC425 MC10125L
IC426 F860
IC427 F1090
IC428 F1090
IC429 LS221S
IC430 AN79L05
IC431 AN79L09
IC432 AN78L09
IC433 LS123S
IC434 LS221S
IC435 NJM082BM
IC436 HC4053F
IC437 AN78L05
IC438 UPC358G
IC439 LS6245
IC441 HC74F
IC442 HC125F
IC443 HCOOF
IC444 NJM082BM
IC445 NE521D
IC446 HCOOF
IC470 UPD65022F258
IC471 FO4D
IC472 LS045
IC473 HC164F
IC476 AN79L05
IC477 F157AD
IC478 HCOOF
IC479 UPD65025BO30
X501 VSX0211
SW401
SW402
SENSE
AFC
ON
OFF
B-Y PHASE
R-Y PHASE
TAPC
CAPC
SRHVR
CSYNC PHASE
YSH
COFF
SRAS
STRW
AFCP
VSET
AFCL
YBSP
YBST
PRGN
PRGP
CBSP
CK2
STD
CNBK
CSH
SEARCH
CDOC
YDOC
YBST
CBST
Y/C DELAY
YSC CONT
VIDEO PHASE1
VIDEO PHASE2
VPH1
VPH2
YH
PB2FH
CP
ACC CP
Y CP
2.25MHZ
YWCK
YWZERO
CWCK
CWZERO
PBWZERO
CNBK1
CWCK2
YWCK2
54MHZ
YAPS
CAPS
1/6
4/6
5/6
F6A
F7B
F8B
R28A
R29A
R29B
F17A
F17B
F16A
F33A
F27A
1/6
2/6
3/6

	R439	R440	R441	R442	R490	R491	R492
AU-65/63/62	0	0	0	——	——	0	——

	R438	R493	R494	R495
NTSC	——	——	0	——
PAL	0	0	——	0

	R532
NTSC	0
PAL	0

	SW401	R437
PATTERN	VSS0126-2	0

	SW402
PATTERN	VSS0126-2

= INPUT SIGNAL

= OUTPUT SIGNAL

* = REFER TO THE COMPARISON CHART

MODEL TYPE	AU-665	AU-65	AU-63	AU-62
NTSC	VEP80666A	Not Used	Not Used	Not Used
PAL	——	Not Used	Not Used	Not Used

W1 SUB SCHEMATIC DIAGRAM [FOR AU-665 NTSC]

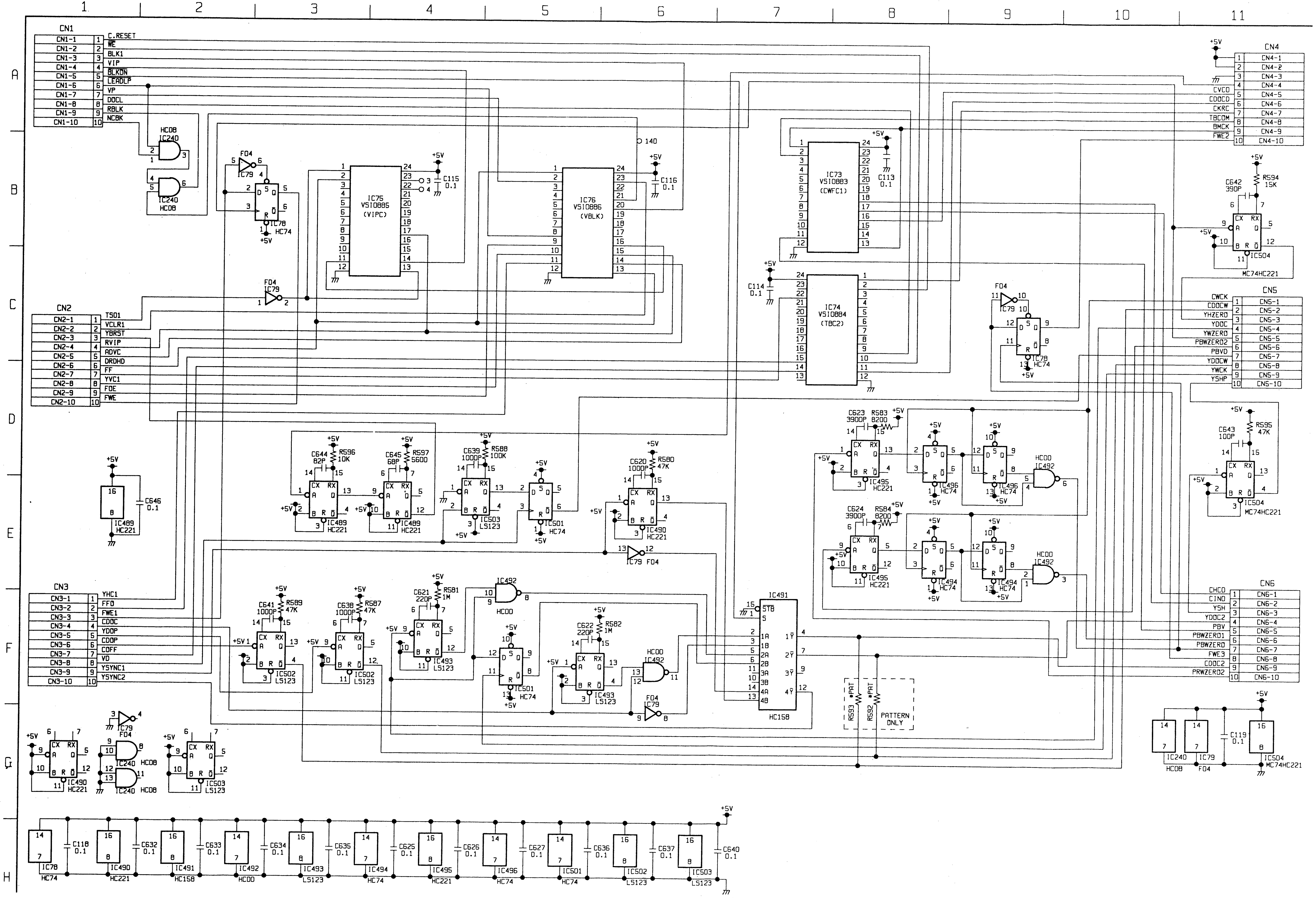

1
2
3
4
5
6
7
8
9
10
11
A
B
C
D
E
F
G
H
CN1
CN1-1 C.RESET
CN1-2 WE
CN1-3 BLK1
CN1-4 VIP
CN1-5 BLKON
CN1-6 LEADLP
CN1-7 VP
CN1-8 DOCL
CN1-9 RBLK
CN1-10 NCBK
CN2
CN2-1 TS01
CN2-2 VCLR1
CN2-3 YBRST
CN2-4 RVIP
CN2-5 ADVC
CN2-6 DRDHD
CN2-7 FF
CN2-8 YVC1
CN2-9 FOE
CN2-10 FWE
CN3
CN3-1 YHC1
CN3-2 FFO
CN3-3 FWE1
CN3-4 CDOC
CN3-5 YDOP
CN3-6 COOP
CN3-7 COFF
CN3-8 VD
CN3-9 YSYNC1
CN3-10 YSYNC2
CN4
CN4-1
CN4-2
CN4-3
CN4-4 CVCO
CN4-5 COOCO
CN4-6 CKRC
CN4-7 TBCOM
CN4-8 BMCK
CN4-9 FWE2
CN4-10
CN5
CN5-1 CWCK
CN5-2 COOCW
CN5-3 YHZERO
CN5-4 YOOC
CN5-5 YWZERO
CN5-6 PBWZERO2
CN5-7 PBVD
CN5-8 YOOCW
CN5-9 YWCK
CN5-10 YSHP
CN6
CN6-1 CHCO
CN6-2 CINO
CN6-3 YSH
CN6-4 YDOC2
CN6-5 PBV
CN6-6 PBWZERO1
CN6-7 PBWZERO
CN6-8 FWE3
CN6-9 COOC2
CN6-10 PRWZERO2
IC75 VS10885 (VIPC)
IC76 VS10886 (VBLK)
IC73 VS10883 (CWFC1)
IC74 VS10884 (TBC2)
IC240 HC08
IC79 F04
IC78 HC74
IC489 HC221
IC490 HC221
IC495 HC221
IC504 MC74HC221
IC503 LS123
IC502 LS123
IC493 LS123
IC501 HC74
IC496 HC74
IC494 HC74
IC492 HC00
IC491 HC158
C115 0.1
C116 0.1
C113 0.1
C114 0.1
140
C642 390P
R594 15K
C643 100P
R595 47K
C623 3900P
R583 8200
C624 3900P
R584 8200
C644 82P
R596 10K
C645 68P
R597 5600
C639 1000P
R588 100K
C620 1000P
R580 47K
C641 1000P
R589 47K
C638 1000P
R587 47K
C621 220P
R581 1M
C622 220P
R582 1M
C646 0.1
C119 0.1
R593 *PAT
R592 *PAT
PATTERN ONLY
C118 0.1
C632 0.1
C633 0.1
C634 0.1
C635 0.1
C625 0.1
C626 0.1
C627 0.1
C636 0.1
C637 0.1
C640 0.1
+5V

W1 (TBC & SYNC GEN) SCHEMATIC DIAGRAM 1/6 [FOR AU-665 NTSC]

MODEL TYPE	AU-665	AU-65	AU-63	AU-62
NTSC	VEP88077A	See Pages 5-2-6~5-2-8		
PAL	——			

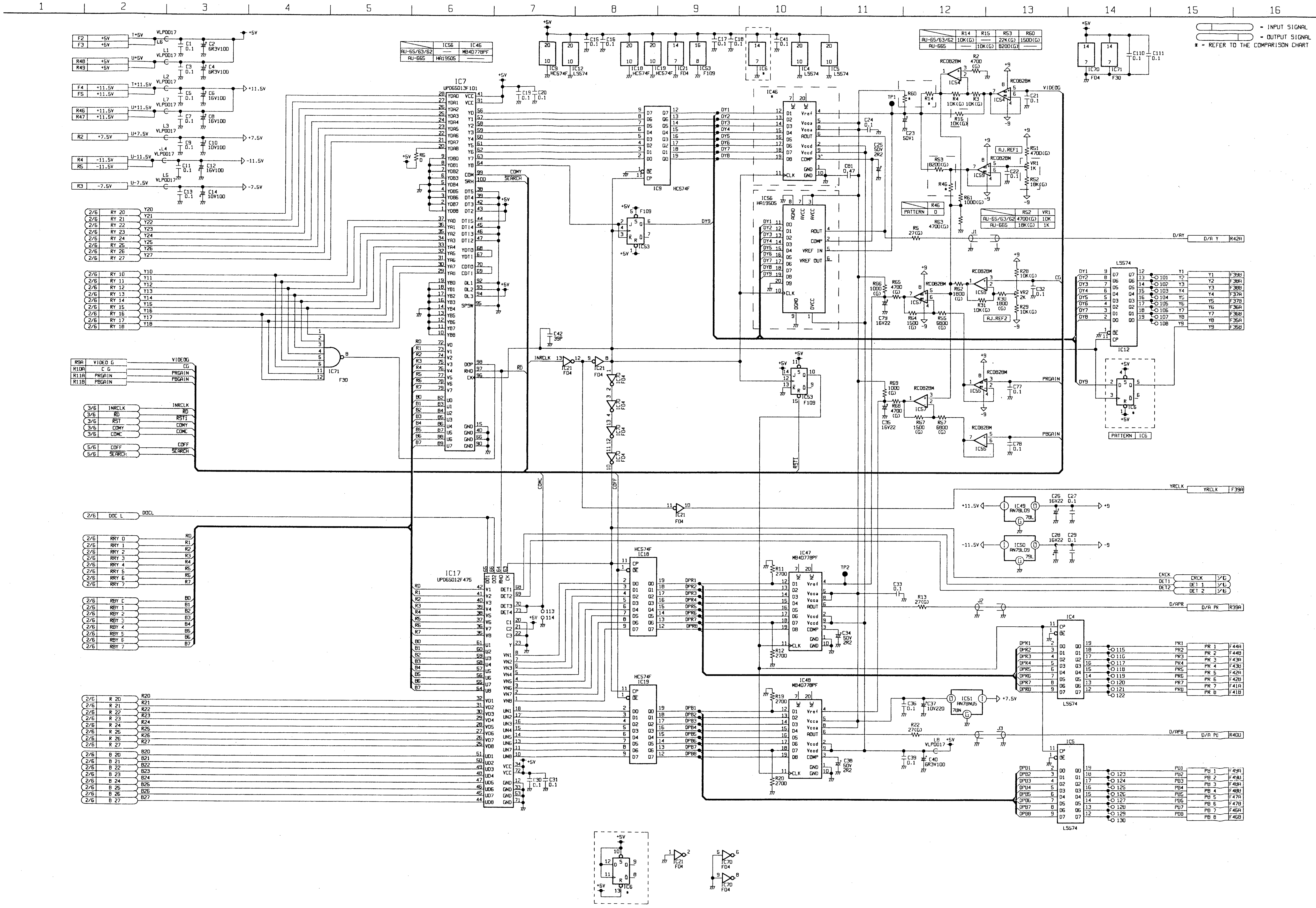

1 2 3 4 5 6 7 8 9 10 11 12 13 14 15 16
= INPUT SIGNAL
= OUTPUT SIGNAL
* = REFER TO THE COMPARISON CHART
	IC56	IC46
AU-65/63/62	——	MB40778PF
AU-665	HA19505	——
	R14	R15	RS3	RS0
AU-65/63/62	10K(G)	——	22K(G)	1500(G)
AU-665	——	10K(G)	8200(G)	——
	RS2	VR1
AU-65/63/62	4700(G)	10K
AU-665	18K(G)	1K
PATTERN	R46
PATTERN	IC6
IC7 UPD6013F101
IC17 UPD65012F475
IC9 HC574F
IC18 HC574F
IC19 HC574F
IC12 LS574
IC4 LS574
IC5 LS574
IC46
IC47 MB40778PF
IC48 MB40778PF
IC56 HA19505
IC49 AN78L09
IC50 AN79L09
IC51 AN78N05
IC53 F109
IC54 RC082BM
IC55 RC082BM
IC57 RC082BM
IC59 RC082BM
IC21 F04
IC70 F04
IC71 F30
IC30 F30
+5V +11.5V -11.5V +7.5V -7.5V +9 -9
VLP0017
VIDEOG
CG
PRGAIN
PBGAIN
INRCLK
RD
RST
COMY
COMC
COFF
SEARCH
DOCL
D/A Y R42A
D/A PR R39A
D/A PB R40A
YRCLK F39A
CRCK
DET 1
DET 2
TP1 TP2
J1 J2 J3
RJ.REF1
RJ.REF2
2/6 RY 20 … RY 27
2/6 RY 10 … RY 18
2/6 RRY 0 … RRY 7
2/6 RBY 0 … RBY 7
2/6 R 20 … R 27
2/6 B 20 … B 27
3/6 INRCLK
3/6 RD
3/6 RST
3/6 COMY
3/6 COMC
5/6 COFF
5/6 SEARCH
2/6 DOC L
R9A VIDEO G
R10A C G
R11A PRGAIN
R11B PBGAIN
Y1 … Y9 F39B F38A F38B F37A F37B F36A F36B F35A F35B
PR 1 … PR 8 F44A F44B F43A F43B F42A F42B F41A F41B
PB 1 … PB 8 F49A F49B F48A F48B F47A F47B F46A F46B

MODEL / TYPE	AU-665	AU-65	AU-63	AU-62
NTSC	VEP88077A	See Pages 5-2-6~5-2-8		
PAL	———			

W1 (TBC & SYNC GEN) SCHEMATIC DIAGRAM 2/6 [FOR AU-665 NTSC]

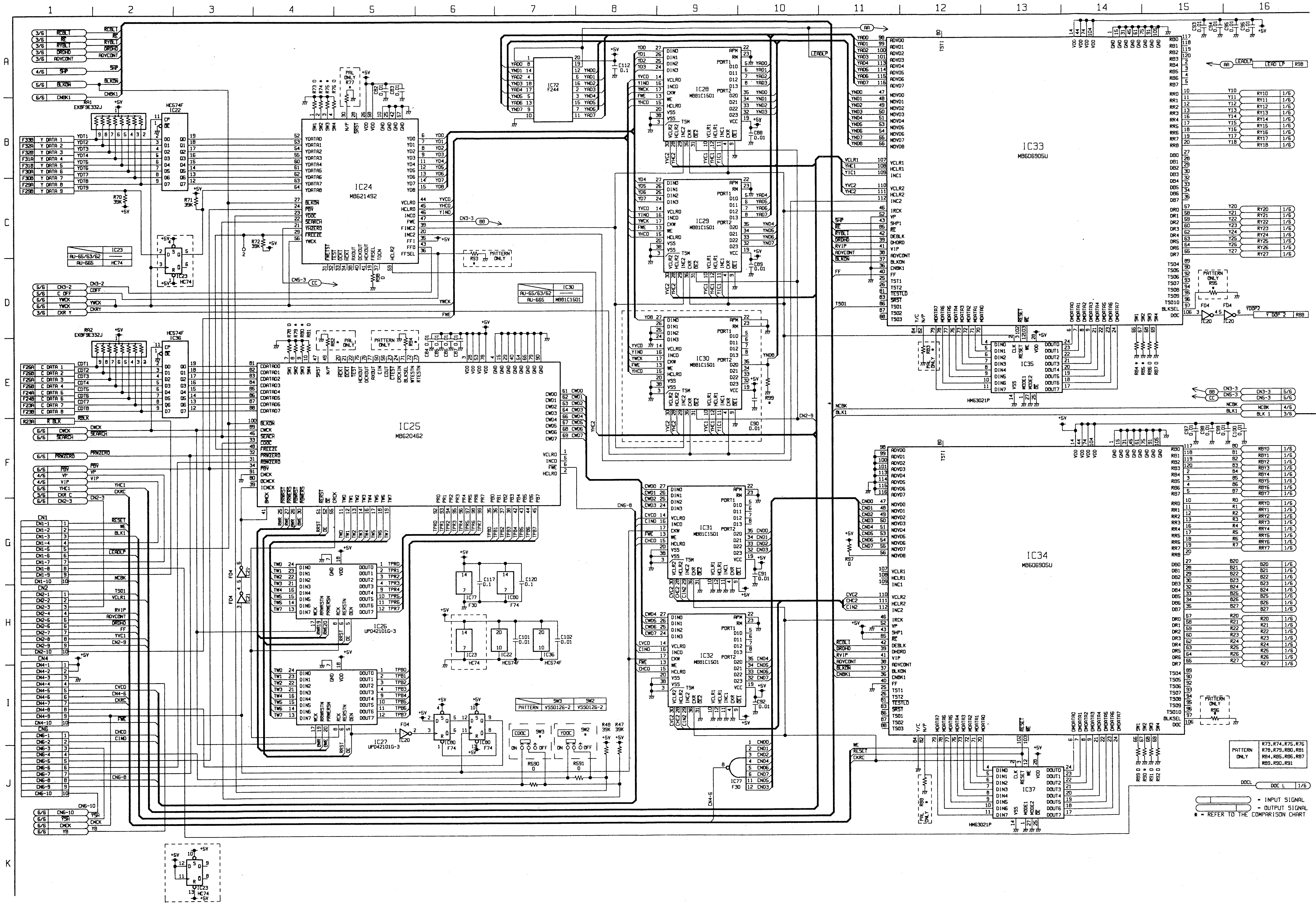
IC22 HC574F
IC23 HC74
IC24 MB621492
IC25 MB620462
IC26 UPD42101G-3
IC27 UPD42101G-3
IC28 MB81C1501
IC29 MB81C1501
IC30 MB81C1501
IC31 MB81C1501
IC32 MB81C1501
IC33 MB60690SU
IC34 MB60690SU
IC35 HM63021P
IC36 HC574F
IC37 HM63021P
IC72 F244
RA1 EXBF9E332J
RA2 EXBF9E332J
PATTERN ONLY
PAL ONLY
PATTERN ONLY R73,R74,R75,R76 R78,R79,R80,R81 R84,R85,R86,R87 R89,R90,R91
= INPUT SIGNAL
= OUTPUT SIGNAL
* = REFER TO THE COMPARISON CHART

REVERSE SIDE TBC & SYNC GEN SCHEMATIC DIAGRAM

W1 (TBC & SYNC GEN) SCHEMATIC DIAGRAM 3/6 [FOR AU-665 NTSC]

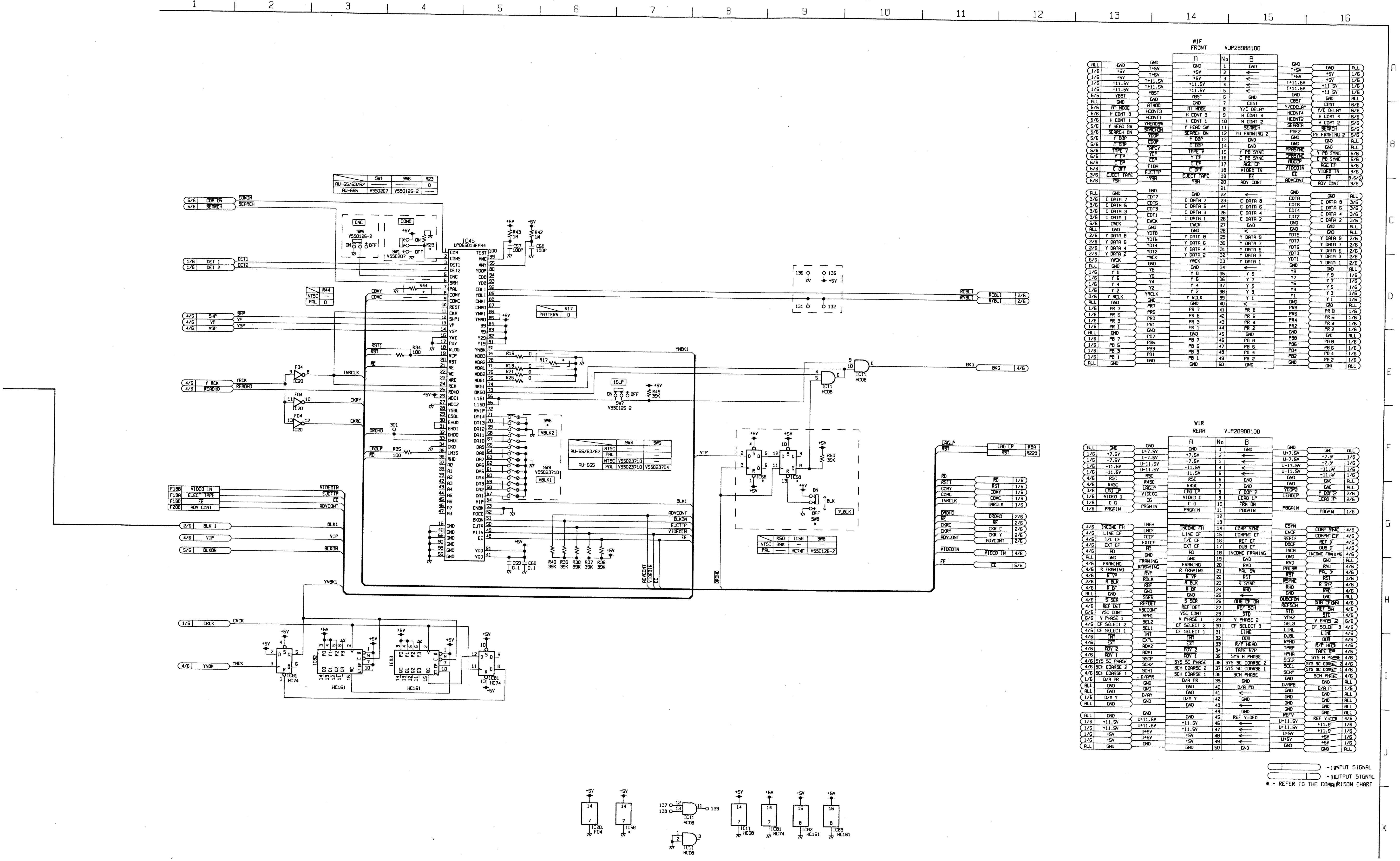
IC45
UPD6501
IC20 F04
IC11 HC08
IC58 HC74F
IC81 HC74
IC82 HC161
IC83 HC161
W1F FRONT VJP2898B100
W1R REAR VJP2898B100
SW1
SW6
SW4
SW5
SW7
SW8
R44
R17 PATTERN
VBLK2
VBLK1
ZLBLK
1SLP
RCBLT
RYBLT
BKG
LAG LP
RST
VIP
BLK1
BLKON
YNBK1
CRCK
YNBK
-: INPUT SIGNAL
-: OUTPUT SIGNAL
* = REFER TO THE COMPARISON CHART

MODEL TYPE	AU-665	AU-65	AU-63	AU-62
NTSC	VEP88077A	See Pages 5-2-6~5-2-8		
PAL	——			

W1 (TBC & SYNC GEN) SCHEMATIC DIAGRAM 4/6 [FOR AU-665 NTSC]

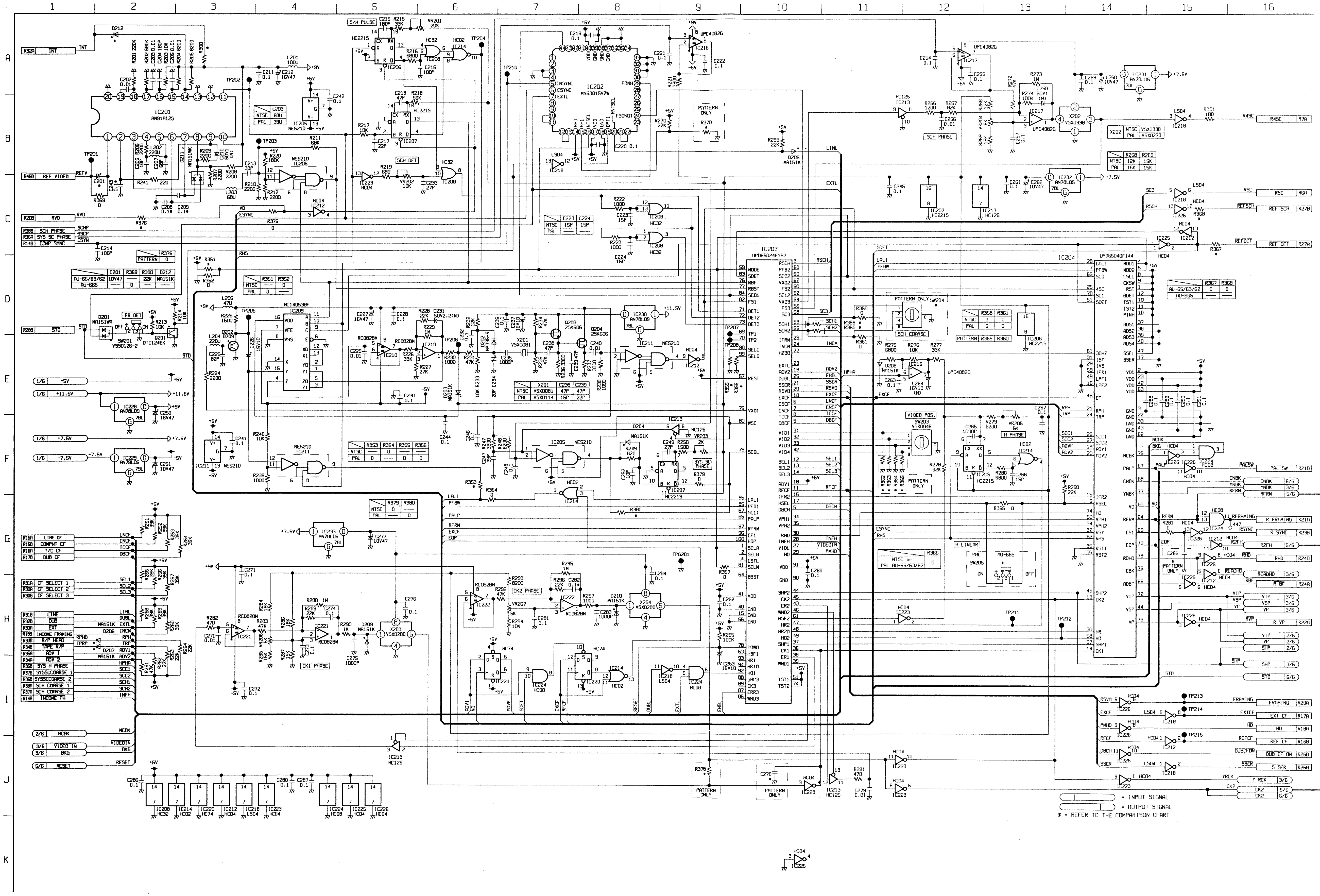
1
2
3
4
5
6
7
8
9
10
11
12
13
14
15
16
A
B
C
D
E
F
G
H
I
J
K
IC201 AN51A125
IC202 MN53015VZW
IC203 UPD65024F152
IC204 UPD65040F144
IC209 MC14053BF
IC216 UPC4082G
IC217 UPC4082G
IC228 AN78L09
IC229 AN79L06
IC230 AN78L09
IC231 AN78L05
IC232 AN78L05
IC233 AN78L05
X201 VSX0081
X202 VSX0338
X203 VSX0280
X204 VSX0280
R32A INT
R45B REF VIDEO
R20B RVD
R38B SCH PHASE
R36A SYS SC PHASE
R14B COMP SYNC
R28B STD
R15A LINE CF
R15B COMPNT CF
R16A T/C CF
R17B DUB CF
R31A CF SELECT 1
R30A CF SELECT 2
R30B CF SELECT 3
R31B LINE
R32B DUB
R33A EXT
R18B INCOME FRAMING
R33B R/P HEAD
R34B TAPE R/P
R35A ADV 1
R34A ADV 2
R35B SYS H PHASE
R37B SYSSCCOARSE 1
R36B SYSSCCOARSE 2
R39A SCH COARSE 1
R37A SCH COARSE 2
R14A INCOME FH
1/6 +5V
1/6 +11.5V
1/6 +7.5V
1/6 -7.5V
2/6 NCBK
3/6 VIDEO IN
3/6 BKG
6/6 RESET
R45C R7A
RSC R6A
REF SCH R27B
REF DET R27A
PAL SW R21B
CNBK 6/6
YNBK 3/6
RFRM 5/6
R FRAMING R21A
R SYNC R23B
R2FH 5/6
RHD R24B
R BF R24A
R VP R22A
SHP 3/6
STD 6/6
FRAMING R20A
EXT CF R17A
HD R18A
REF CF R16B
DUB CF ON R26B
S SER R26A
Y RCK 3/6
CK2 5/6
CK2 6/6
S/H PULSE
SCH DET
SCH PHASE
CK1 PHASE
CK2 PHASE
SYS SC PHASE
H PHASE
VIDEO POS.
SCH COARSE
PATTERN ONLY
H LINEAR
= INPUT SIGNAL
= OUTPUT SIGNAL
* = REFER TO THE COMPARISON CHART

W1 (TBC & SYNC GEN) SCHEMATIC DIAGRAM 5/6 [FOR AU-665 NTSC]

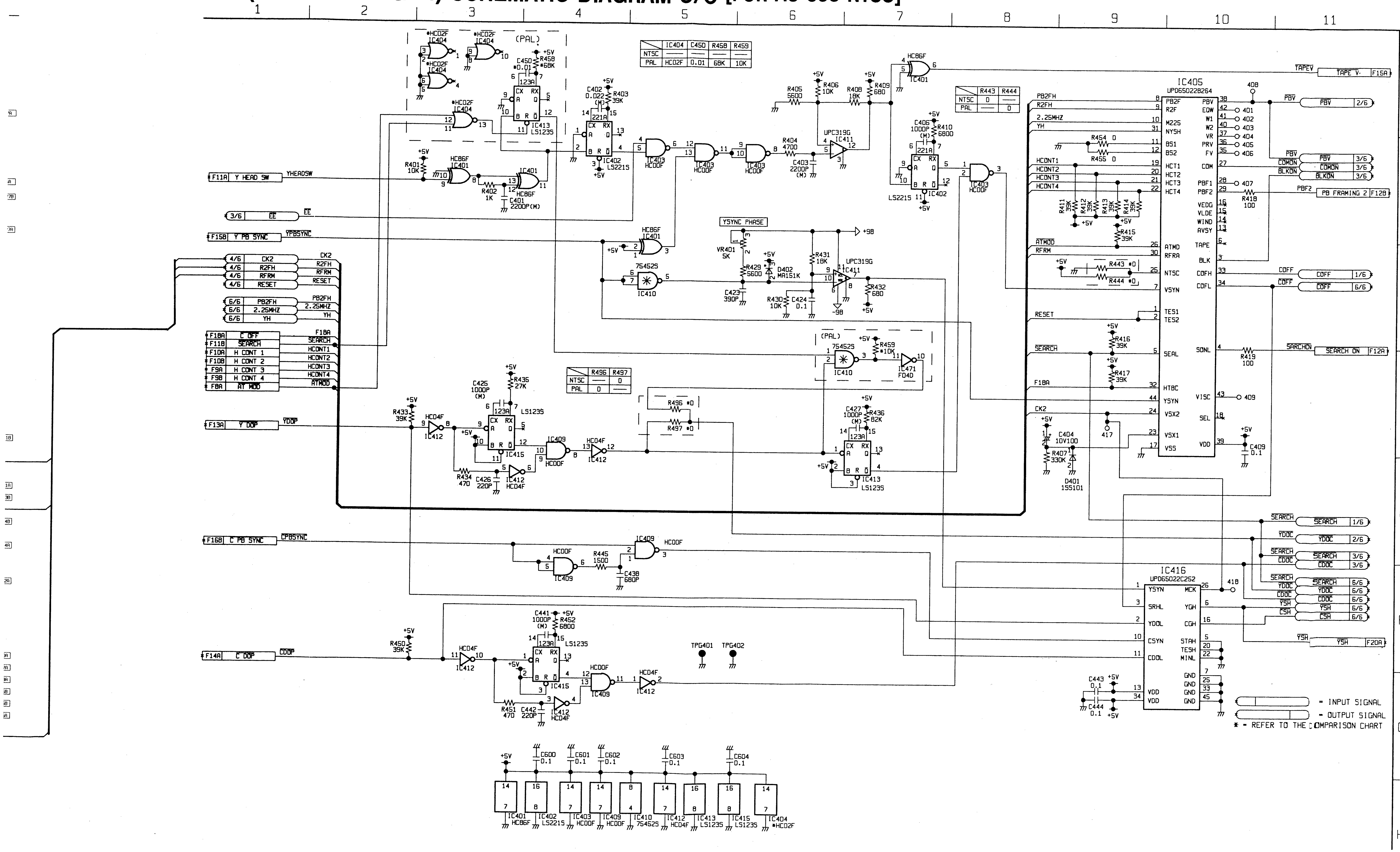

1
2
3
4
5
6
7
8
9
10
11
(PAL)
*HC02F IC404
C450 *0.01
R458 *68K
IC413 LS123S
IC404 | C450 | R458 | R459
NTSC | — | — | —
PAL | HC02F | 0.01 | 68K | 10K
R443 | R444
NTSC | 0 | —
PAL | — | 0
R496 | R497
NTSC | — | 0
PAL | 0 | —
C402 0.022 (M)
R403 39K
IC402 LS221S
IC403 HC00F
R405 5600
R406 10K
R408 18K
R409 680
R404 4700
C403 2200P (M)
UPC319G IC411
HC86F IC401
C406 1000P (M)
R410 6800
IC405 UPD65022B264
PB2FH
R2FH
2.25MHZ
YH
HCONT1
HCONT2
HCONT3
HCONT4
R454 0
R455 0
R411 39K
R412 39K
R413 39K
R414 39K
R415 39K
ATMOD
RFRM
RESET
SEARCH
F18A
CK2
TAPEV
TAPE V F15A
PBV 2/6
PBV 3/6
COMON 3/6
BLKON 3/6
PB FRAMING 2 F12B
R418 100
COFF 1/6
COFF 6/6
SARCHON
SEARCH ON F12A
R419 100
F11A Y HEAD SW
YHEADSW
R401 10K
R402 1K
C401 2200P (M)
3/6 EE
F15B Y PB SYNC
YPBSYNC
4/6 CK2
4/6 R2FH
4/6 RFRM
4/6 RESET
6/6 PB2FH
6/6 2.25MHZ
6/6 YH
F18A C OFF
F11B SEARCH
F10A H CONT 1
F10B H CONT 2
F9A H CONT 3
F9B H CONT 4
F8A AT MOD
YSYNC PHASE
VR401 5K
R429 5600
D402 MA151K
R431 18K
R432 680
C423 390P
R430 10K
C424 0.1
754525 IC410
R459 *10K
IC471 F04D
R416 39K
R417 39K
C404 10V100
R407 330K
D401 1SS101
C409 0.1
C425 1000P (M)
R435 27K
R433 39K
HC04F IC412
IC415 LS123S
IC409 HC00F
R434 470
C426 220P
F13A Y DOP
YDOP
C427 1000P (M)
R436 82K
F16B C PB SYNC
CPBSYNC
R445 1500
C438 680P
IC416 UPD65022C252
SEARCH 1/6
YDOC 2/6
SEARCH 3/6
CDOC 3/6
SEARCH 6/6
YDOC 6/6
CDOC 6/6
YSH 6/6
CSH 6/6
YSH F20A
F14A C DOP
CDOP
R450 39K
C441 1000P (M)
R452 6800
R451 470
C442 220P
TPG401
TPG402
C443 0.1
C444 0.1
C600 0.1
C601 0.1
C602 0.1
C603 0.1
C604 0.1
IC401 HC86F
IC402 LS221S
IC403 HC00F
IC409 HC00F
IC410 754525
IC412 HC04F
IC413 LS123S
IC415 LS123S
IC404 *HC02F

= INPUT SIGNAL
= OUTPUT SIGNAL
* = REFER TO THE COMPARISON CHART

W1 (TBC & SYNC GEN) SCHEMATIC DIAGRAM 6/6 [FOR AU-665 NTS

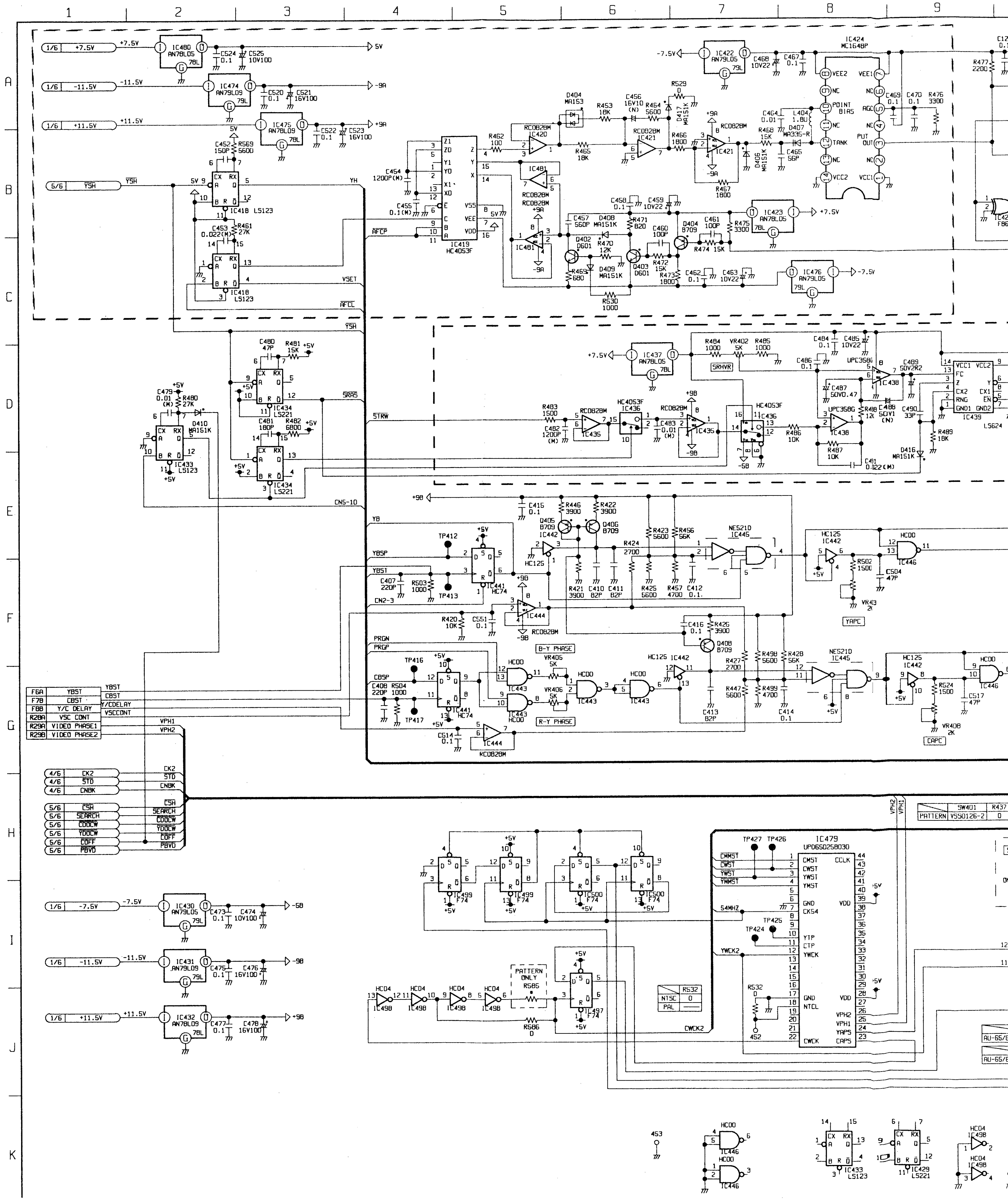
1
2
3
4
5
6
7
8
9
A
B
C
D
E
F
G
H
I
J
K
IC480 AN78L05
IC474 AN79L09
IC475 AN78L09
IC418 LS123
IC419 HC4053F
IC420 RC0828M
IC421 RC0828M
IC422 AN79L05
IC423 AN78L05
IC424 MC1648P
IC476 AN79L05
IC481
IC433 LS123
IC434 LS221
IC435
IC436 HC4053F
IC437 AN78L05
IC438 UPC358G
IC439 LS624
IC441 HC74
IC442 HC125
IC443 HC00
IC444 RC0828M
IC445 NE521D
IC446 HC00
IC430 AN79L05
IC431 AN79L09
IC432 AN78L09
IC479 UPD65025B030
IC497 F74
IC498 HC04
IC499 F74
IC500 F74
YSH
AFCP
VSET
AFCL
SRRS
STRW
CNS-10
YB
YBSP
YBST
CN2-3
PRGN
PRGP
CBSP
B-Y PHASE
R-Y PHASE
YAPC
CAPC
F6A YBST
F7B CBST
F8B Y/C DELAY
R28A VSC CONT
R29A VIDEO PHASE1
R29B VIDEO PHASE2
1/6 +7.5V
1/6 -11.5V
1/6 +11.5V
5/6 YSH
4/6 CK2
4/6 STD
4/6 CNBK
5/6 CSH
5/6 SEARCH
5/6 CDOCW
5/6 YDOCW
5/6 COFF
5/6 PBVD
1/6 -7.5V
1/6 -11.5V
1/6 +11.5V
PATTERN ONLY
NTSC 0
PAL
SW401
PATTERN VSS0126-2
TP412
TP413
TP416
TP417
TP424
TP425
TP426
TP427

MODEL / TYPE	AU-665	AU-65	AU-63	AU-62
NTSC	VEP88077A	See Pages 5-2-6~5-2-8		
PAL	——			

AU-665 NTSC]

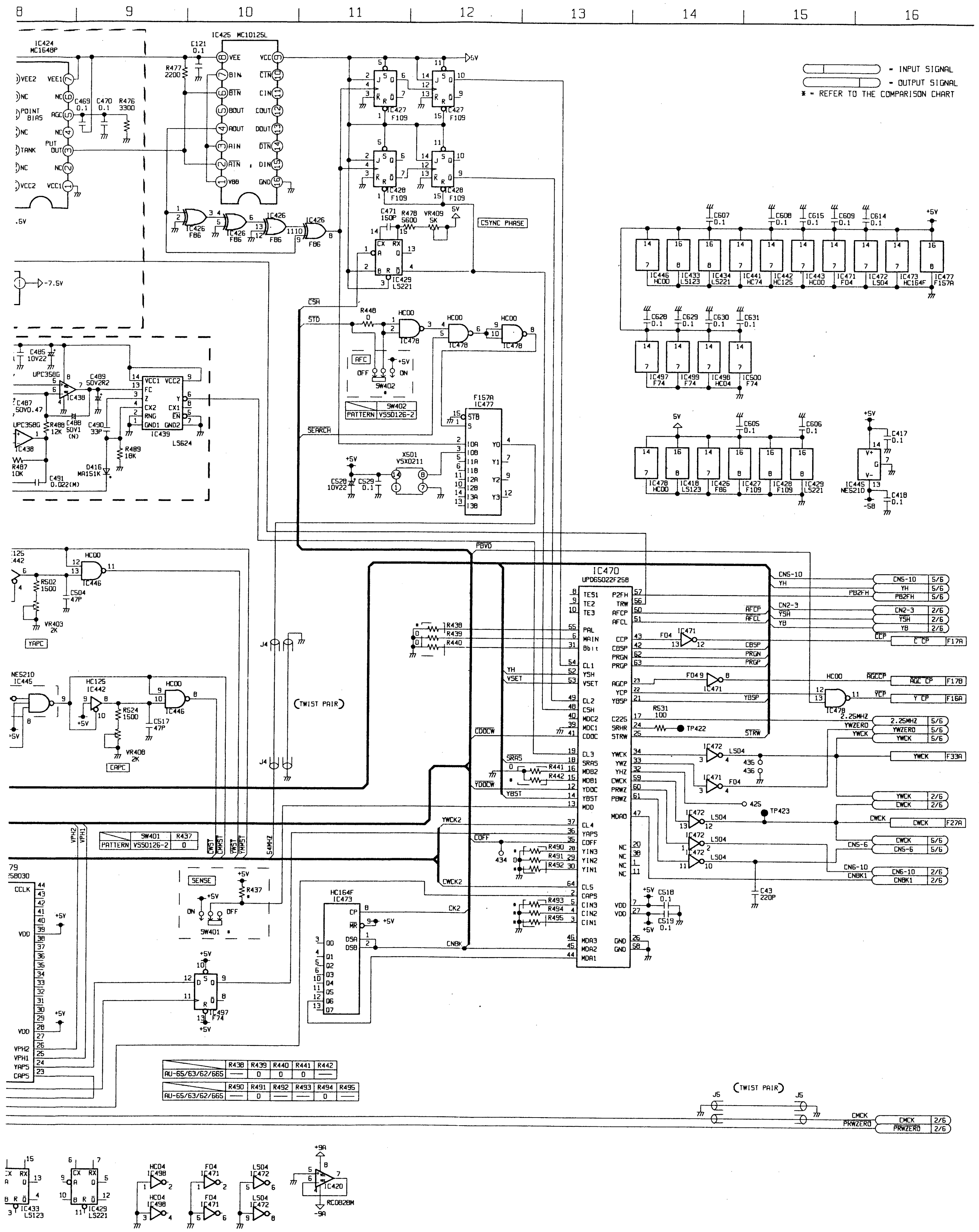

8
9
10
11
12
13
14
15
16
= INPUT SIGNAL
= OUTPUT SIGNAL
* = REFER TO THE COMPARISON CHART
IC424 MC1648P
IC425 MC10125L
IC427 F109
IC428 F109
IC426 F86
IC429 LS221
CSYNC PHASE
IC478 HC00
AFC
SW402
PATTERN VSS0126-2
F157A IC477
X501 VSX0211
SEARCH
IC438 UPC358G
IC439 LS624
D416 MA151K
IC446 HC00
IC442 HC125
NE5210 IC445
YAPC
CAPC
VR403 2K
VR408 2K
(TWIST PAIR)
J4
IC470 UPD65022F258
PBVD
CDOCW
SRRS
YDOCW
YBST
YWCK2
COFF
CWCK2
CK2
CNBK
HC164F IC473
SW401
PATTERN VSS0126-2
SENSE
IC497 F74
TP422
TP423
CN5-10
CN2-3
CN6-10
CNBK1
AGCCP
YCP
2.25MHZ
YWZERO
YWCK
CWCK
CN5-6
C CP F17A
AGC CP F17B
Y CP F16A
YWCK F33A
CWCK F22A
CMCK
PRWZERO
J5
IC433 LS123
IC429 LS221
HC04 IC498
F04 IC471
LS04 IC472
IC420 RC0828M
+9A
-9A
+5V
-7.5V

	R438	R439	R440	R441	R442
AU-65/63/62/665	——	0	0	0	——

	R490	R491	R492	R493	R494	R495
AU-65/63/62/665	——	0	——	——	0	——

W2 SUB (9BIT A/D) SCHEMATIC DIAGRAM [FOR AU-665 NTSC]

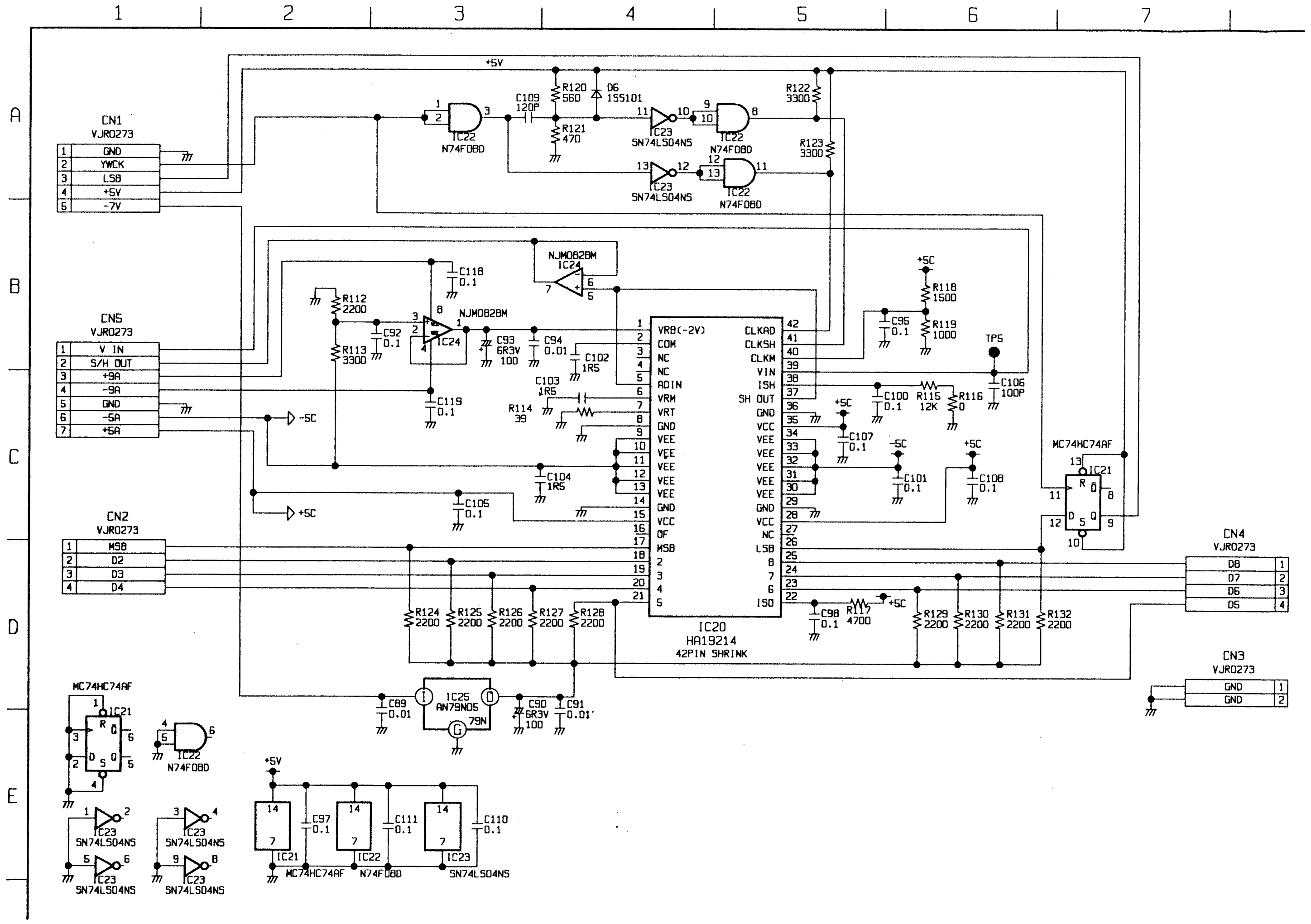
1
2
3
4
5
6
7
A
B
C
D
E
CN1
VJR0273
GND
YWCK
LSB
+5V
-7V
CN5
VJR0273
V IN
S/H OUT
+9A
-9A
GND
-5A
+5A
CN2
VJR0273
MSB
D2
D3
D4
CN4
VJR0273
D8
D7
D6
D5
CN3
VJR0273
GND
GND
IC20
HA19214
42PIN SHRINK
IC22
N74F08D
IC23
SN74LS04NS
IC21
MC74HC74AF
IC24
NJM082BM
IC25
AN79N05
D6
1SS101
TP5
+5V
+5C
-5C

MODEL TYPE	AU-665	AU-65	AU-63	AU-62
NTSC	VEP80569A	Not Used	Not Used	Not Used
PAL	Not Used	Not Used	Not Used	Not Used

MODEL TYPE	AU-665
NTSC	VEP88063E
PAL	VEP88063E

W2 (ENCODER) SCHEMATIC DIAGRAM 1/4

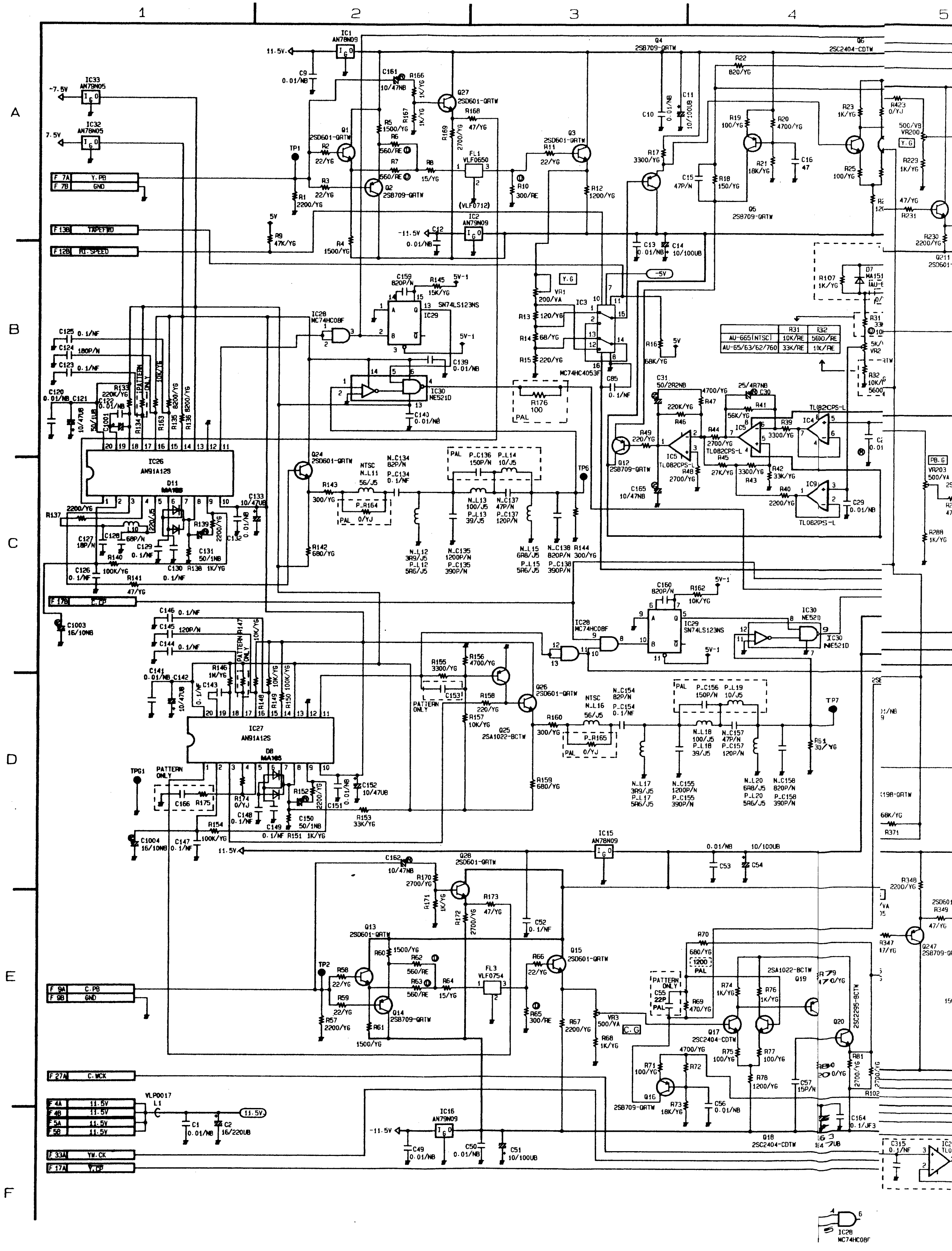
1
2
3
4
5
A
B
C
D
E
F
IC1
AN78N09
IC33
AN79N05
IC32
AN78N05
IC2
AN79N09
IC26
AN91A12S
IC27
AN91A12S
IC28
MC74HC08F
IC29
SN74LS123NS
IC30
NE521D
IC3
MC74HC4053F
IC5
TL082CPS-L
IC9
TL082CPS-L
IC15
AN78N09
IC16
AN79N09
Y.PB
GND
TAPE FWD
RF SPEED
C.PB
GND
C.WCK
11.5V
YW.CK
V.DP
VLP0017
L1
FL1
VLF0650
FL3
VLF0754
TP1
TP2
TP6
TP7
TPG1
PATTERN ONLY
PAL
NTSC
AU-665(NTSC)
AU-65/63/62/760

MODEL TYPE	AU-665	AU-65	AU-63	AU-62
NTSC	VEP88063B	VEP88063A	VEP88063A	VEP88063A
PAL	VEP88063E	VEP88063C	VEP88063C	VEP88063C

W2 (ENCODER) SCHEMATIC DIAGRAM 2/4

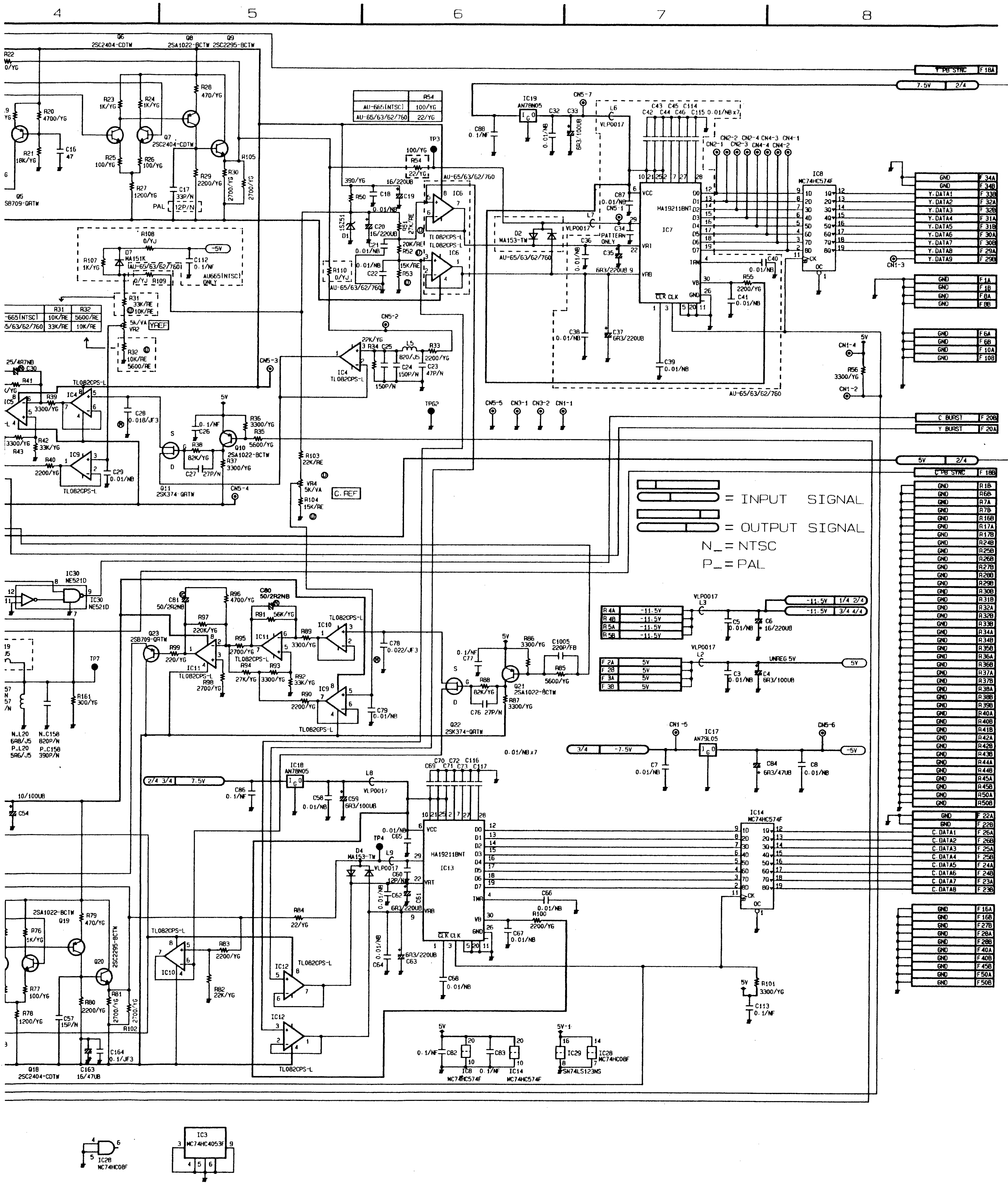
4
5
6
7
8
= INPUT SIGNAL
= OUTPUT SIGNAL
N_= NTSC
P_= PAL
IC7 HA19211BNT
IC8 MC74HC574F
IC13 HA19211BNT
IC14 MC74HC574F
IC3 MC74HC4053F
IC28 MC74HC08F

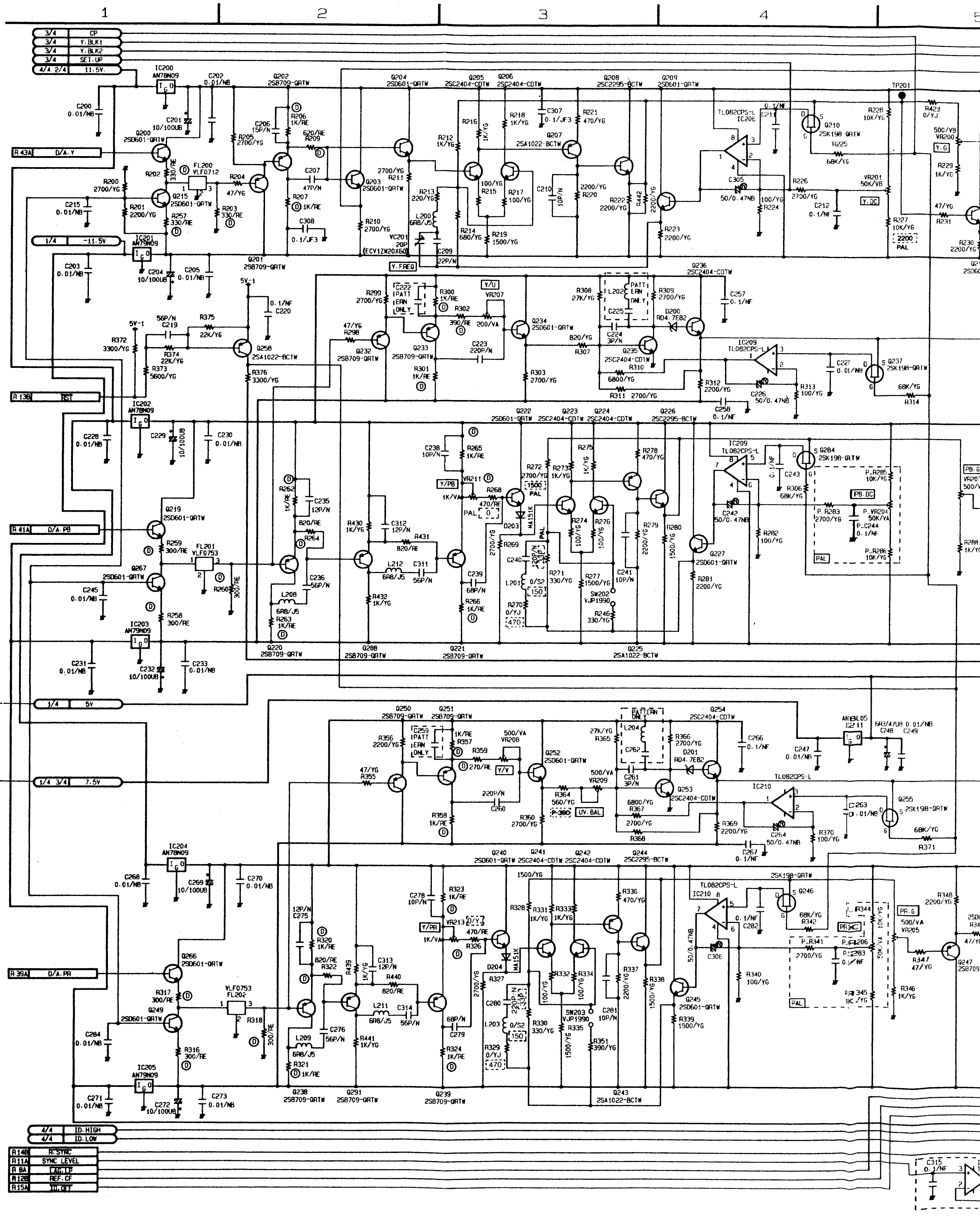
1
2
3
4
D/A.Y
D/A.PB
D/A.PR
IC200 AN78N09
IC201 AN79N09
IC202 AN78N09
IC203 AN79N09
IC204 AN78N09
IC205 AN79N09

W2 (ENCODER) SCHEMATIC DIAGRAM 2/4

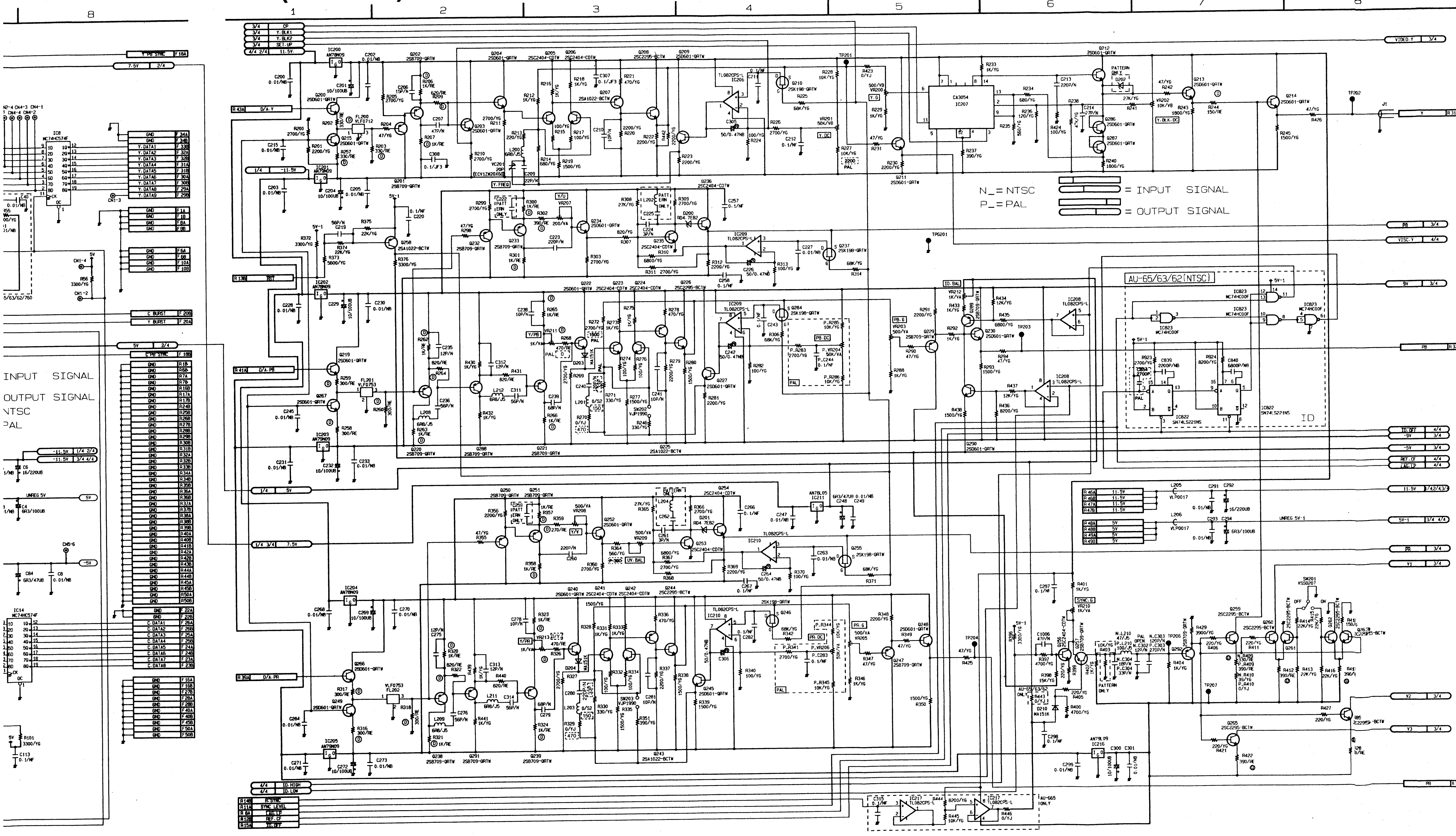
8
1
2
3
4
5
6
7
8
N_=NTSC
P_=PAL
= INPUT SIGNAL
= OUTPUT SIGNAL
INPUT SIGNAL
OUTPUT SIGNAL
NTSC
PAL
CP
Y.BLK1
Y.BLK2
SET.UP
11.5V
7.5V
-11.5V
5V
-5V
UNREG 5V
UNREG 5V-1
D/A.Y
D/A.PB
D/A.PR
BST
IC200 AN78N09
IC201 AN79N09
IC202 AN78N09
IC203 AN79N09
IC204 AN78N09
IC205 AN79N09
IC206 TL082CPS-L
IC207 CA3054
IC208 TL082CPS-L
IC209 TL082CPS-L
IC210 TL082CPS-L
IC211 AN78L05
IC216 AN79L09
IC217 TL082CPS-L
IC8 MC74HC574F
IC14 MC74HC574F
IC822 SN74LS221NS
IC823 MC74HC00F
AU-65/63/62[NTSC]
AU-65/63/62 ONLY
AU-665 ONLY
ID
PATTERN ONLY
PAL
Y.FREQ
Y.BLK.DC
Y.DC
PB.DC
PR.DC
UV.BAL
ID.BAL
SYNC.G
PB.G
PR.G
VIDEO Y
PB
PR
VISC Y
9V
Y
Y1
Y2
Y3
ID.OFF
-9V
REF.CF
LAG.FP
ID.HIGH
ID.LOW
H.SYNC
SYNC LEVEL
REF.CF
ID.OFF
Y.DATA1
Y.DATA2
Y.DATA3
Y.DATA4
Y.DATA5
Y.DATA6
Y.DATA7
Y.DATA8
Y.DATA9
C.DATA1
C.DATA2
C.DATA3
C.DATA4
C.DATA5
C.DATA6
C.DATA7
C.DATA8
GND
C BURST
Y BURST
Y PB SYNC
C PB SYNC
TP201
TP202
TP203
TP204
TP207
TPG201
SW201 VSS0207
SW202 VJP1990
SW203 VJP1990
J1
FL200 VLF0712
FL201 VLF0753
FL202 VLF0753
L205 VLP0017
L206 VLP0017

MODEL TYPE	AU-665	AU-65	AU-63	AU-62
NTSC	VEP88063B	VEP88063A	VEP88063A	VEP88063A
PAL	VEP88063E	VEP88063C	VEP88063C	VEP88063C

W2 (ENCODER) SCHEMATIC DIAGRAM 3/4

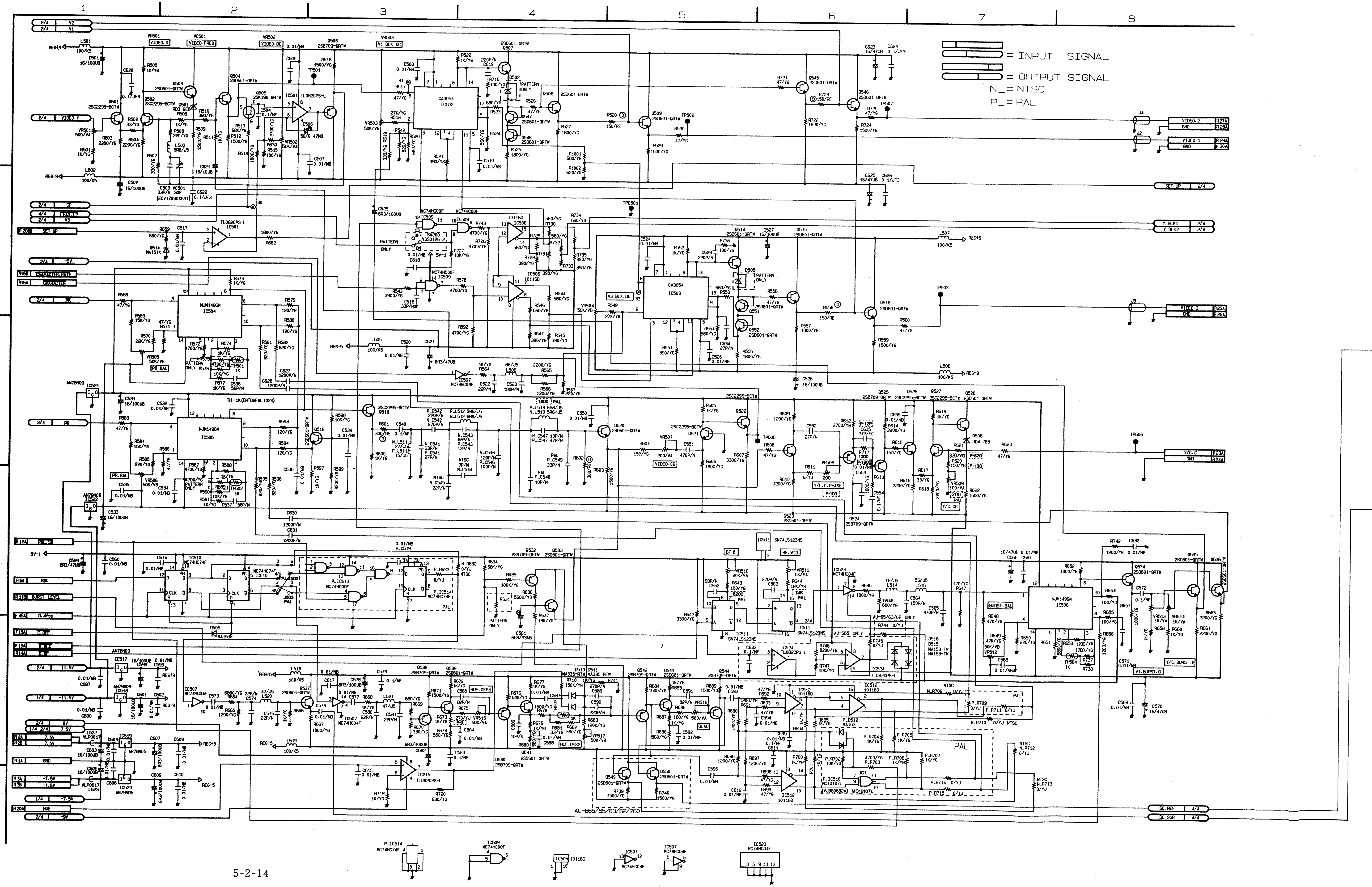

1
2
3
4
5
6
7
8
A
B
C
D
E
F
= INPUT SIGNAL
= OUTPUT SIGNAL
N_ = NTSC
P_ = PAL
VIDEO.Y
VIDEO.2
VIDEO.1
VIDEO.3
SET.UP
Y.BLK1
Y.BLK2
Y/C.C
Y/C.BURST.G
SC.REF
SC.SUB
IC502 CA3054
IC503 CA3054
IC504 NJM1496M
IC505 NJM1496M
IC508 NJM1496M
IC501 TL082CPS-L
IC510 MC74HC74F
IC511 SN74LS123NS
IC512 10116O
IC215 TL082CPS-L
PATTERN ONLY
AU-665/65/63/62/760

W2 (ENCODER) SCHEMATIC DIAGRAM 4/4[FOR AU-665]

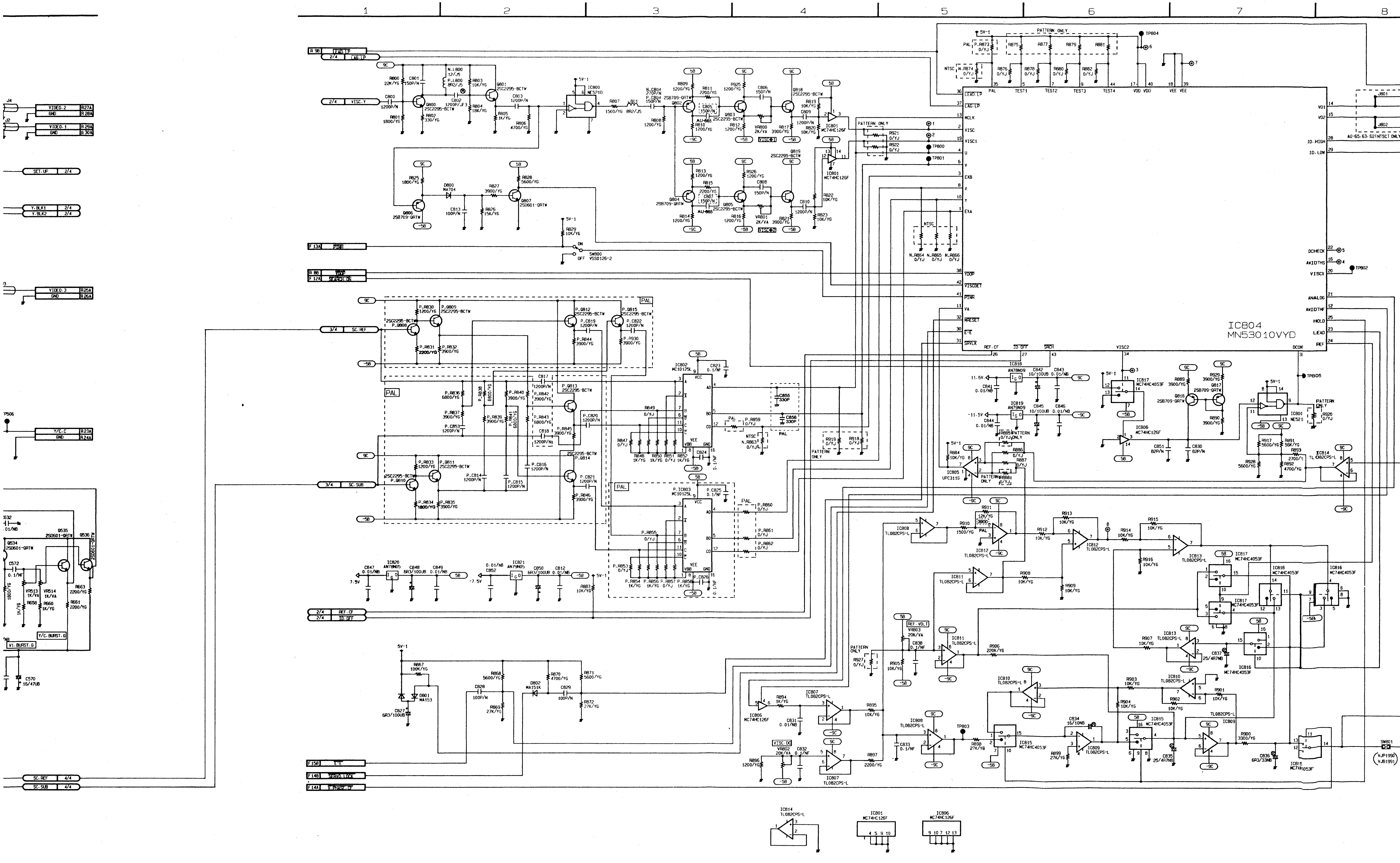
1
2
3
4
5
6
7
8
IC804
MN53010VYD
LEAD.LP
LAG.LP
MCLK
VISC
VISC1
EXB
EXA
VDOP
VISCDET
PINH
RESET
E-E
SAVLK
DCHECK
AWIDTHS
VISCX
ANALOG
AWIDTHF
HOLD
LEAD
REF
ID.HIGH
ID.LOW
VD1
VD2
VIDEO-2
VIDEO-1
VIDEO-3
GND
SET.UP
Y.BLK1
Y.BLK2
Y/C-C
SC.REF
SC.SUB
VISC.Y
PTNR
VDOP
SEARCH ON
REF.CF
ID OFF
SERVO.LOCK
V.PULSE.CF
E-E
PATTERN ONLY
PAL
NTSC
IC800 NE521D
IC801 MC74HC126F
IC802 MC10125L
IC803 MC10125L
IC805 UPC311G
IC806 MC74HC126F
IC807 TL082CPS-L
IC808 TL082CPS-L
IC809 TL082CPS-L
IC810 TL082CPS-L
IC811 TL082CPS-L
IC812 TL082CPS-L
IC813 TL082CPS-L
IC814 TL082CPS-L
IC815 MC74HC4053F
IC816 MC74HC4053F
IC817 MC74HC4053F
IC818 AN78N09
IC819 AN79N09
IC820 AN78N05
IC821 AN79N05
SW800 VSS0126-2
SW801
TP800
TP801
TP802
TP803
TP804
TP805
REF VOLT
VISC DC
AU-65.63.62(NTSC) ONLY
V.JP1990
V.JB1991

GRAM 4/4[FOR AU-665]

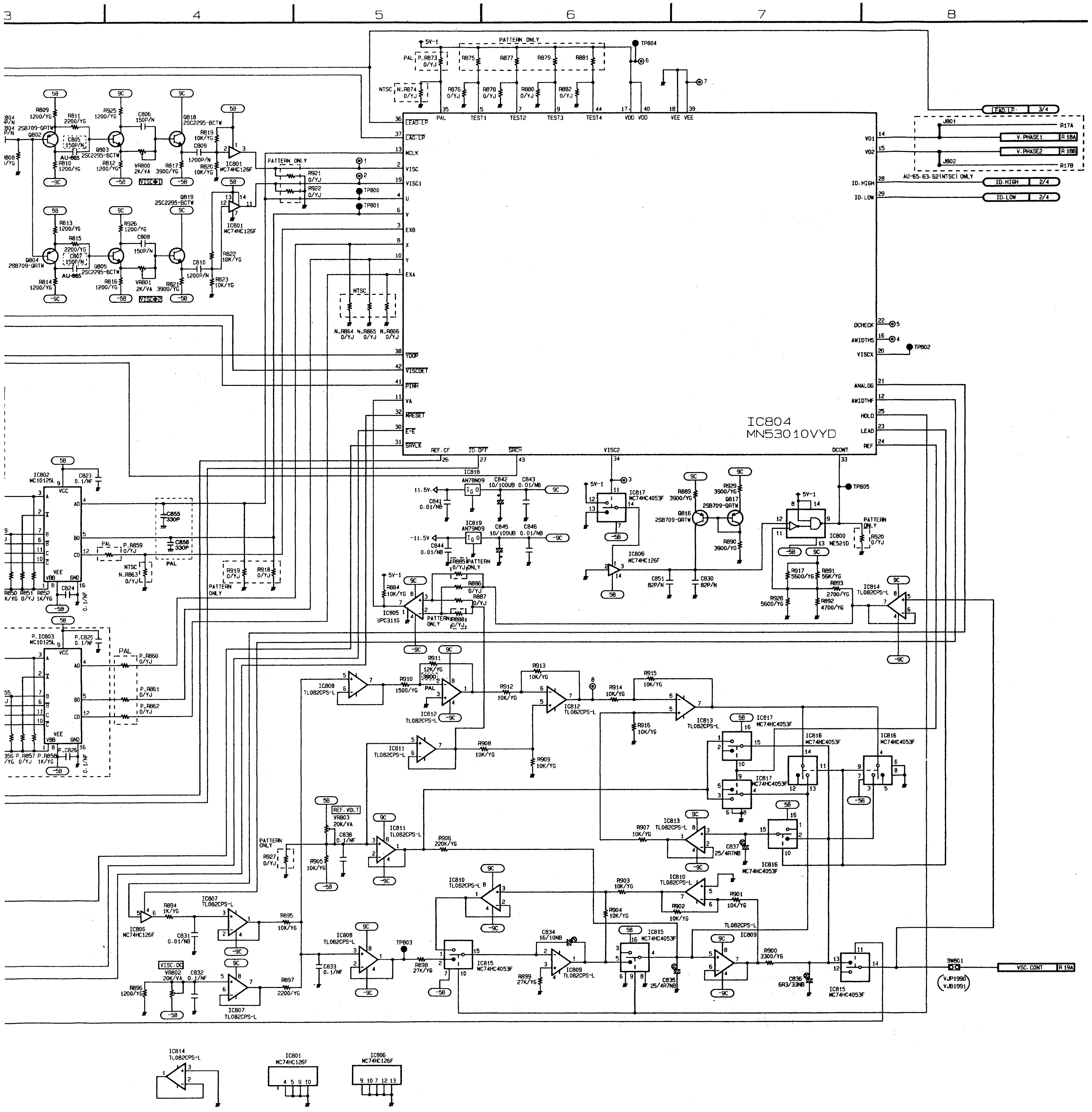

3
4
5
6
7
8
IC804
MN53010VYD
PATTERN ONLY
TP804
TP800
TP801
TP802
TP803
TP805
LEAD-LP
LAG-LP
MCLK
VISC
VISC1
U
V
EXB
X
Y
EXA
VDOP
VISCDET
PINH
VA
MRESET
E-E
SHVLK
REF.CF
ID.OFF
SMCH
VISC2
DCONT
PAL
TEST1
TEST2
TEST3
TEST4
VDD VDD
VEE VEE
VO1
VO2
ID.HIGH
ID.LOW
DCHECK
AWIDTHS
VISCX
ANALOG
AWIDTHF
HOLD
LEAD
REF
LEAD-LP 3/4
V.PHASE1 R 18A
V.PHASE2 R 18B
ID.HIGH 2/4
ID.LOW 2/4
J801
J802
R17A
R17B
AU-65·63·62(NTSC) ONLY
NTSC
N.R864 N.R865 N.R866
Q802 2SB709-QRTW
Q803 2SC2295-BCTW
Q804 2SB709-QRTW
Q805 2SC2295-BCTW
Q818 2SC2295-BCTW
Q819 2SC2295-BCTW
AU-665
VR800 2K/VA
VR801 2K/VA
VISC-1
VISC-2
IC801 MC74HC126F
IC802 MC10125L
P.IC803 MC10125L
IC805 UPC311G
IC806 MC74HC126F
IC807 TL082CPS-L
IC808 TL082CPS-L
IC809 TL082CPS-L
IC810 TL082CPS-L
IC811 TL082CPS-L
IC812 TL082CPS-L
IC813 TL082CPS-L
IC814 TL082CPS-L
IC815 MC74HC4053F
IC816 MC74HC4053F
IC817 MC74HC4053F
IC818 AN78N09
IC819 AN79N09
IC800 NE521D
Q816 2SB709-QRTW
Q817 2SB709-QRTW
REF.VOLT
VR803 20K/VA
VISC.DC
VR802 20K/VA
11.5V
-11.5V
5V-1
5B
9C
-9C
-5B
SW801
VJP1990
VJB1991
VSC.CONT R 19A

5-2-14

W3 (MODULATION & DEMODULATION) SCHEMATIC DIAGRAM 1/5

MODEL / TYPE	AU-665	AU-65	AU-63	AU-62
NTSC	VEP83098B	VEP83098A	VEP83098D	VEP83098C
PAL	VEP83098H	VEP83098E	VEP83098F	VEP83098G

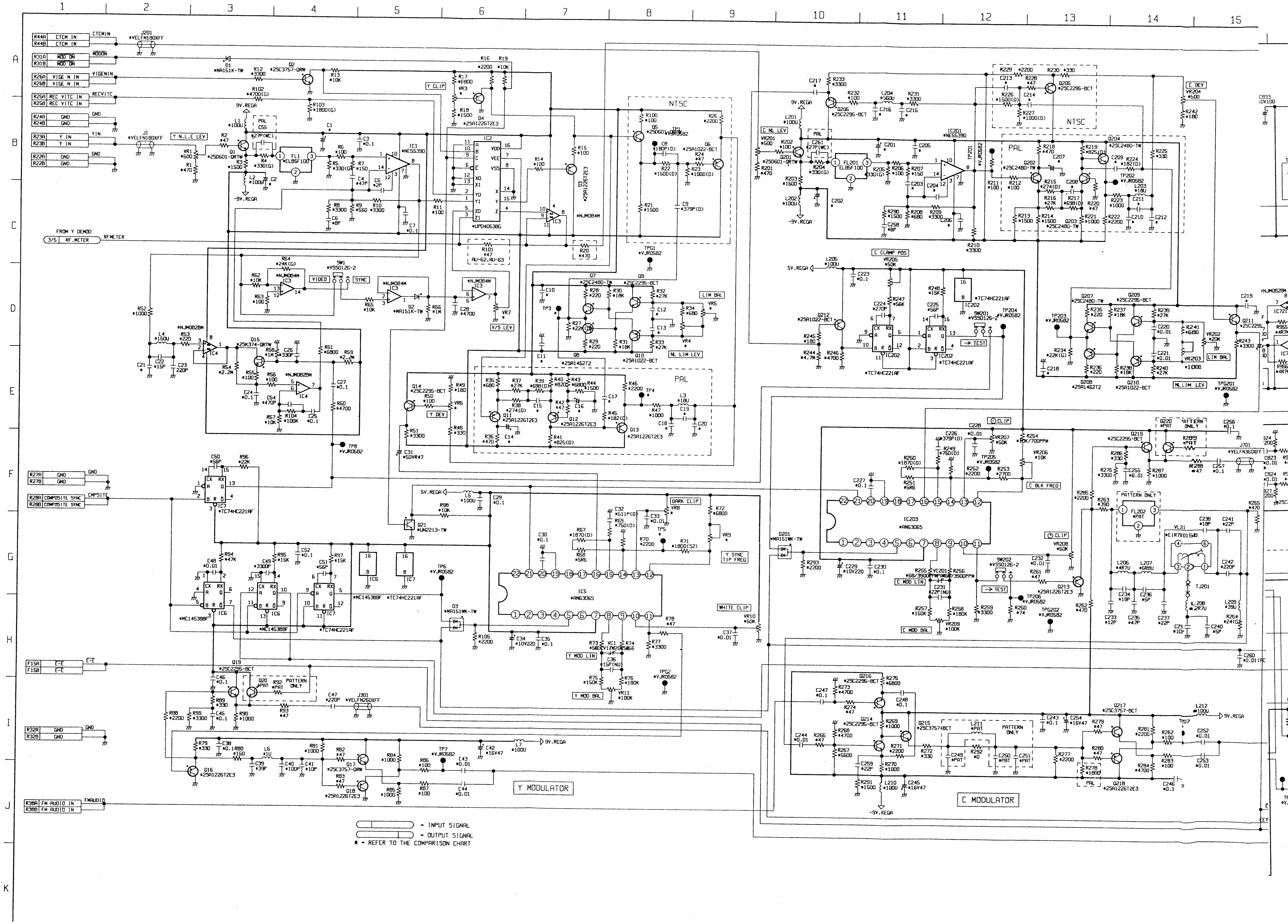
1
2
3
4
5
6
7
8
9
10
11
12
13
14
15
A
B
C
D
E
F
G
H
I
J
K
CTCM IN
MOD ON
VIGE N IN
REC VITC IN
GND
Y IN
FROM Y DEMOD
3/5 RF.METER
COMPOSITE SYNC
E-E
FM AUDIO IN
Y N.L.E LEV
Y CLIP
NTSC
PAL
VIDEO
SYNC
V/S LEV
LIM BAL
NL LIM LEV
Y DEV
DARK CLIP
WHITE CLIP
Y SYNC TIP FREQ
Y MOD LIN
Y MOD BAL
PATTERN ONLY
Y MODULATOR
C DEV
C NL LEV
C CLAMP POS
TEST
LIM BAL
NL LIM LEV
C CLIP
C BLK FREQ
C MOD LIN
C MOD BAL
C MODULATOR
9V.REGA
-9V.REGA
5V.REGA
IC1 NE5539O
IC2 UPD4053BG
IC5 AN63065
IC203 AN63065
IC201 NE5539O

= INPUT SIGNAL
= OUTPUT SIGNAL
* = REFER TO THE COMPARISON CHART

W3 (MODULATION & DEMODULATION) SCHEMATIC DIAGRAM 2/5

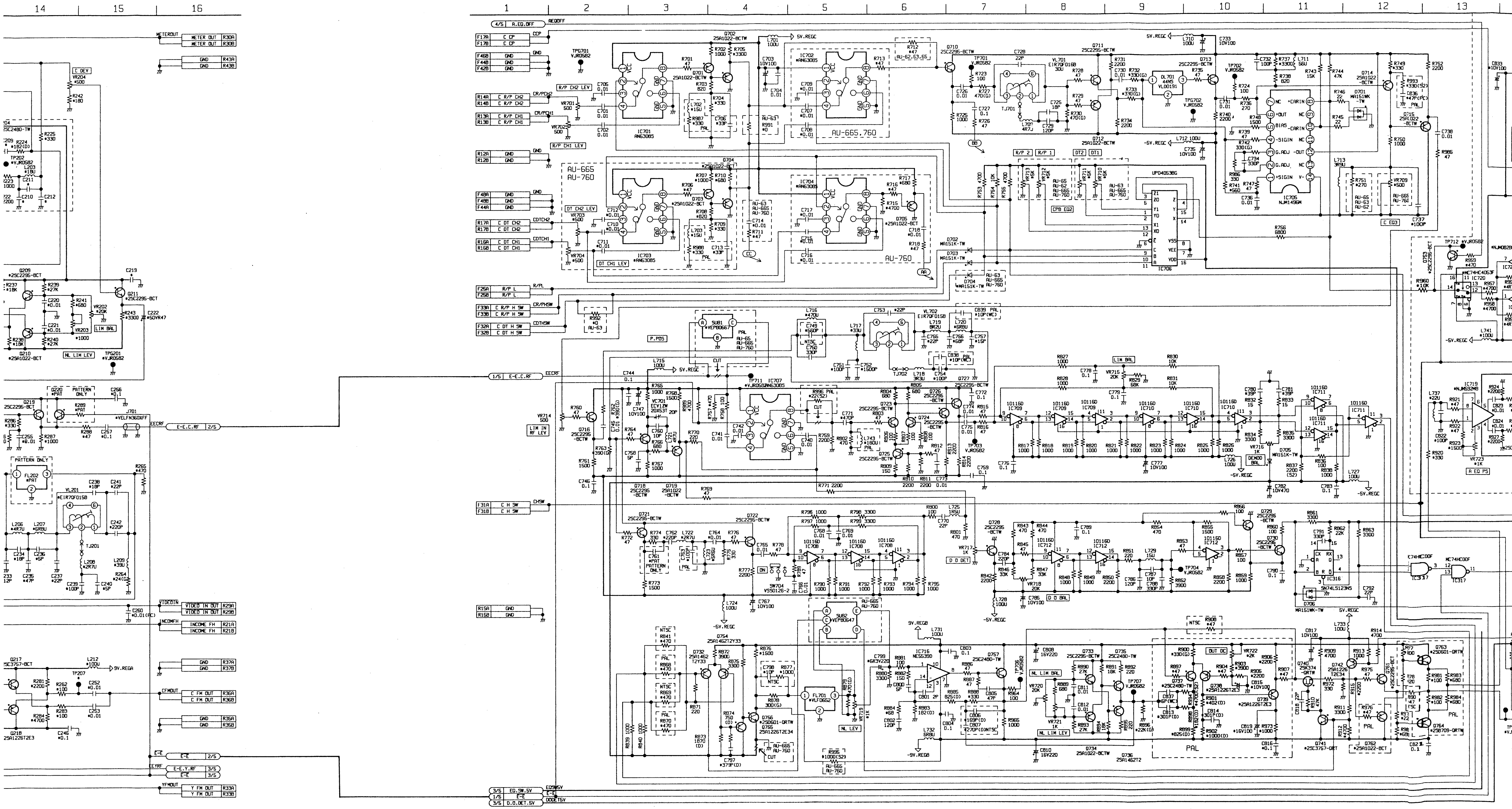

14
15
16
1
2
3
4
5
6
7
8
9
10
11
12
13
METEROUT
METER OUT R30A
METER OUT R30B
GND R43A
GND R43B
C DEV
VR204 *500
R242 *180
Q209 *2SC2295-BCT
Q211 *2SC2295-BCT
Q210 *2SA1022-BCT
TP201 *VJR0582
TPG201 *VJR0582
LIM BAL
NL LIM LEV
PATTERN ONLY
Q219 2SC2295-BCT
J701 *VELFN360XFF
EECRF
E-E.C.RF 2/5
FL202 *PAT
VL201 *EIR7QF015B
TJ201
VIDEOIN
VIDEO IN OUT R29A
VIDEO IN OUT R29B
INCOMFM
INCOME FM R21A
INCOME FM R21B
GND R37A
GND R37B
CFMOUT
C FM OUT R36A
C FM OUT R36B
GND R35A
GND R35B
TP207
L212 *100U
5V.REGA
Q217 2SC3757-BCT
Q218 2SA1226T2E3
E-E 2/5
EEYRF
E-E.Y.RF 3/5
E-E 3/5
YFMOUT
Y FM OUT R33A
Y FM OUT R33B
4/5 A.EQ.OFF AEQOFF
F17A C CP
F17B C CP
CCP
F46B GND
F44B GND
F42B GND
R14A C R/P CH2
R14B C R/P CH2
R13A C R/P CH1
R13B C R/P CH1
CR/PCH2
CR/PCH1
R/P CH2 LEV
R/P CH1 LEV
TPG701 VJR0582
VR701 500
VR702 500
IC701 AN6308S
IC702 *AN6308S
IC703 *AN6308S
IC704 *AN6308S
Q702 2SA1022-BCTW
Q701 2SA1022-BCTW
Q703 *2SA1022-BCT
Q704 *2SA1022-BCT
Q705 *2SA1022-BCT
AU-665.760
AU-665
AU-760
AU-63
AU-62.63.65
DT CH2 LEV
DT CH1 LEV
R12A GND
R12B GND
F48A GND
F48B GND
F44A GND
R17A C DT CH2
R17B C DT CH2
R16A C DT CH1
R16B C DT CH1
CDTCH2
CDTCH1
VR703 *500
VR704 *500
F25A R/P L
F25B R/P L
R/PL
F33A C R/P H SW
F33B C R/P H SW
CR/PHSW
F32A C DT H SW
F32B C DT H SW
CDTHSW
P.POS
5V.REGC
Q710 2SC2295-BCTW
Q711 2SC2295-BCTW
Q712 2SA1022-BCTW
Q713 2SC2295-BCTW
Q714 2SA1022-BCTW
Q715 2SA1022-BCTW
TP701 VJR0582
TP702 VJR0582
TPG702 VJR0582
VL701 EIR7QF016B
TJ701
DL701 44NS VLD0191
IC705 NJM1496M
IC706 UPD4053BG
D701 MA151WK-TW
D702 MA151K-TW
D703 MA151K-TW
D704 *MA151K-TW
-5V.REGC
R/P 2
R/P 1
DT2
DT1
CPB EQ2
C EQ3
+CARIN
-CARIN
+OUT
-OUT
BIAS
+SIGIN
-SIGIN
G.ADJ
Y+
Y-
SUB1 *VEP80667
SUB2 *VEP80647
PAL
NTSC
CUT
E-E.C.RF
TP711 *VJR0582
IC707 *AN6308S
VC701 ECV1ZW 20X53T
VR714 500
LIM IN RF LEV
Q716 2SC2295-BCTW
Q718 2SC2295-BCTW
Q719 2SA1022-BCTW
Q723 2SC2295-BCTW
Q724 2SC2295-BCTW
Q725 2SC2295-BCTW
Q726 2SC2295-BCTW
Q727 2SA1022-BCTW
VL702 EIR7QF016B
TJ702
TP703 VJR0582
IC708 10116D
IC709 10116D
IC710 10116D
IC711 10116D
IC712 10116D
LIN BAL
VR715 20K
VR716 1K
D705 MA151K-TW
DEMOD BAL
A EQ PS
F31A C H SW
F31B C H SW
CHSW
Q721 2SC2295-BCTW
Q722 2SC2295-BCTW
Q728 2SC2295 -BCTW
Q729 2SC2295 -BCTW
Q730 2SC2295 -BCTW
VR717 1K
VR718 20K
D O DET
D O BAL
DN
SW704 VSS0126-2
TP704 VJR0582
IC316 SN74LS123NS
IC317 MC74HC00F
D706 MA151WK-TW
R15A GND
R15B GND
-5V.REGC
IC716 NE5539
FL701 *VLF0652
Q732 2SA1462 T2Y33
Q754 2SA1462T2Y33
Q756 *2SD601-QRTW
Q765 2SA1226T2E34
Q757 2SC2480-TW
Q733 2SC2295-BCTW
Q735 2SC2480-TW
Q734 2SA1022-BCTW
Q736 2SA1462T2
Q737 *2SC2480-TW
Q738 *2SA1226T2E3
Q739 *2SA1226T2E3
Q740 2SK374 -QRTW
Q741 *2SC3757-QRT
Q742 2SA1226 T2E34
Q762 *2SA1022-BCT
Q763 *2SD601-QRTW
Q764 *2SB709-QRTW
TP706 VJR0582
TP707 VJR0582
VR720 20K
VR721 1K
VR722 *2K
NL LIM BAL
NL LIM LEV
NL LEV
OUT DC
9V.REGB
-9V.REGB
5V.REGC
3/5 ED.SW.5V ED9W5V
3/5 E-E E-E
3/5 D.O.DET.5V DODET5V
IC719 *NJM4558M
IC720 *MC74HC4053F
VR723 *1K
TP712 *VJR0582
-5V.REGC

ATION & DEMODULATION) SCHEMATIC DIAGRAM 2/5

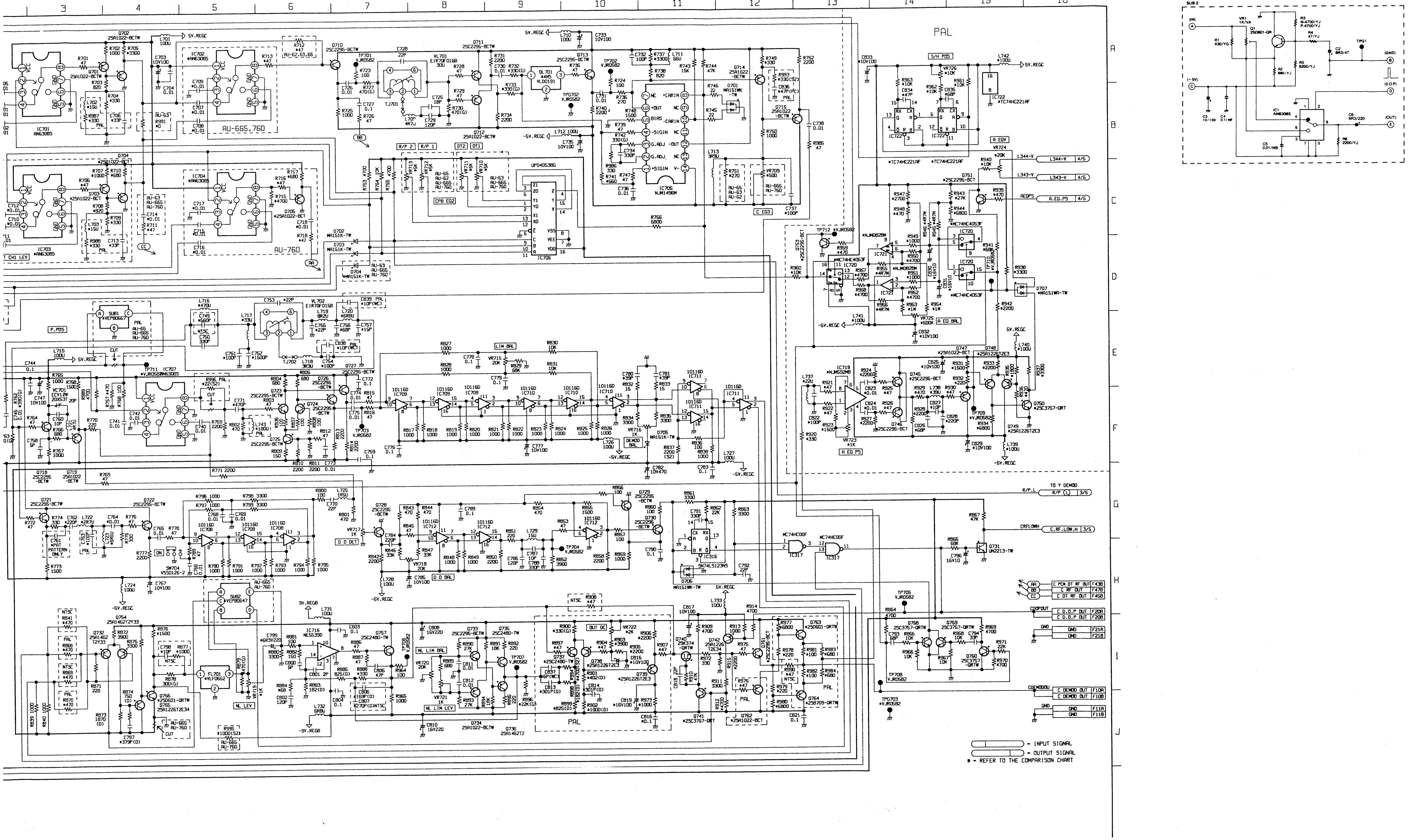

3
4
5
6
7
8
9
10
11
12
13
14
15
16
A
B
C
D
E
F
G
H
I
J
PAL
SUB-2
IC701 AN6308S
IC702 *AN6308S
IC703 *AN6308S
IC704 *AN6308S
AU-665.760
AU-760
5V.REGC
-5V.REGC
DL701 44NS YLD0191
IC705 NJM1496M
IC706 UPD4053BG
IC707 *VJR0563AN6305
IC708
IC709
IC710
IC711
IC712
IC716 NE5539D
IC719 *NJM592M8
IC720 *MC74HC4053F
IC721 *NJM082BM
IC722 *TC74HC221AF
IC316 SN74LS123NS
IC317 MC74HC00F
FL701 *VLF0652
SUB1 *YEP80667
SUB2 *YEP80647
S/H POS
R EQV
R EQ PS
R/P 2
R/P 1
DT2
DT1
CPB EQ2
C EQ3
LIM BAL
NL LIM BAL
NL LIM LEV
NL LEV
DUT DC
D O DET
D O BAL
CH1 LEV
P.POS
TO Y DEMOD
R/P.L
R/P (L) 3/5
CRFLOWH
C.RF.LOW.H 3/5
L344-V 4/5
L343-V 4/5
REQPS
R.EQ.PS 4/5
C PCM DT RF OUT F43B
C RF OUT F47B
C DT RF OUT F45B
CDOPOUT
C.D.O.P OUT F20A
C.D.O.P OUT F20B
GND F21A
GND F21B
CDEMODOU
C DEMOD OUT F10A
C DEMOD OUT F10B
GND F11A
GND F11B
NTSC

= INPUT SIGNAL
= OUTPUT SIGNAL
* = REFER TO THE COMPARISON CHART

W3 (MODULATION & DEMODULATION) SCHEMATIC DIAGRAM 3/5

MODEL / TYPE	AU-665	AU-65	AU-63	AU-62
NTSC	VEP83098B	VEP83098A	VEP83098D	VEP83098C
PAL	VEP83098H	VEP83098E	VEP83098F	VEP83098G

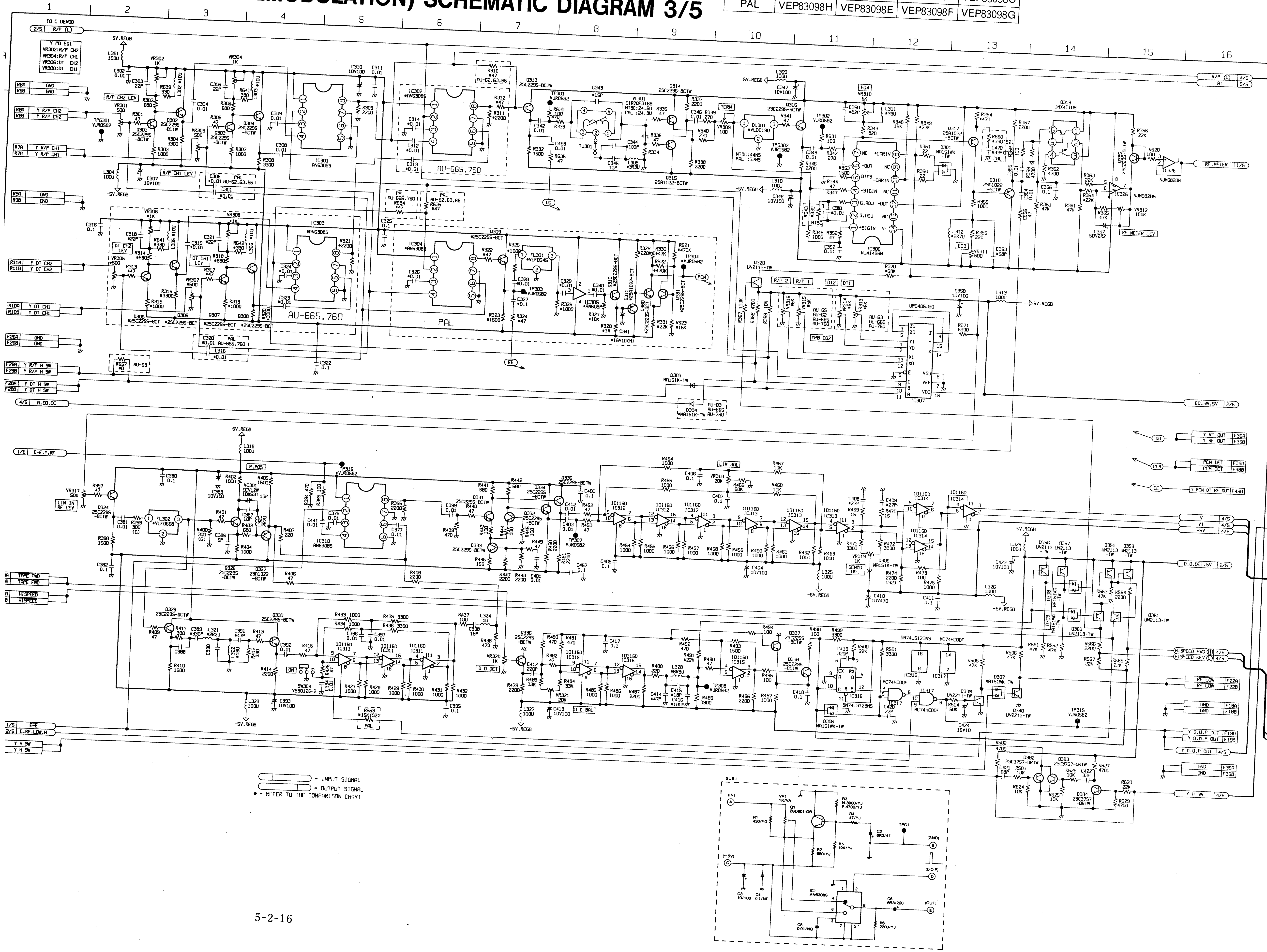

1
2
3
4
5
6
7
8
9
10
11
12
13
14
15
16
TO C DEMOD
2/5 R/P (L)
Y PB EQ1
VR302:R/P CH2
VR304:R/P CH1
VR306:DT CH2
VR308:DT CH1
5V.REG8
R/P CH2 LEV
R/P CH1 LEV
DT CH2 LEV
DT CH1 LEV
IC301 AN63085
IC302 *AN63085
IC303 *AN63085
IC304 *AN63085
AU-665,760
PAL
IC305 *AN6608P
IC306 NJM1496M
IC307 UPD4053BG
IC326 NJM082BM
IC310 AN63085
IC311 10116D
IC312 10116D
IC313 10116D
IC314 10116D
IC315 10116D
IC316 SN74LS123NS
IC317 MC74HC00F
FL301 *VLF0545
FL302 *VLF0668
DL301 *VLD0190
Q319 IMX4T109
RF.METER 1/5
RF METER LEV
R/P (L) 4/5
AT 5/5
E-E.Y.RF
LIM IN RF LEV
LIM BAL
P.POS
DEMOD BAL
D.O.DET
D O BAL
D.O.DET.5V 2/5
EQ.SW.5V 2/5
4/5 A.EQ.DC
Y RF OUT F36A
Y RF OUT F36B
PCM DET F38A
PCM DET F38B
Y PCM DT RF OUT F49B
V 4/5
V1 4/5
-5V 4/5
HISPEED FWD (H) 4/5
HISPEED REV (C) 4/5
RF LOW F22A
RF LOW F22B
GND F18A
GND F18B
Y D.O.P OUT F19A
Y D.O.P OUT F19B
Y D.O.P OUT 4/5
GND F39A
GND F39B
Y H SW 4/5
TAPE FWD
HISPEED
1/5 E-E
2/5 C.RF.LOW.H
Y H SW
-5V.REG8
SUB-1
(IN) A
(GND) B
(-5V) C
(D.O.P) D
(OUT) E
IC1 AN6308S
Q1 2SD601-QR
TPG1

▭ = INPUT SIGNAL
▭ = OUTPUT SIGNAL
* - REFER TO THE COMPARISON CHART

W3 (MODULATION

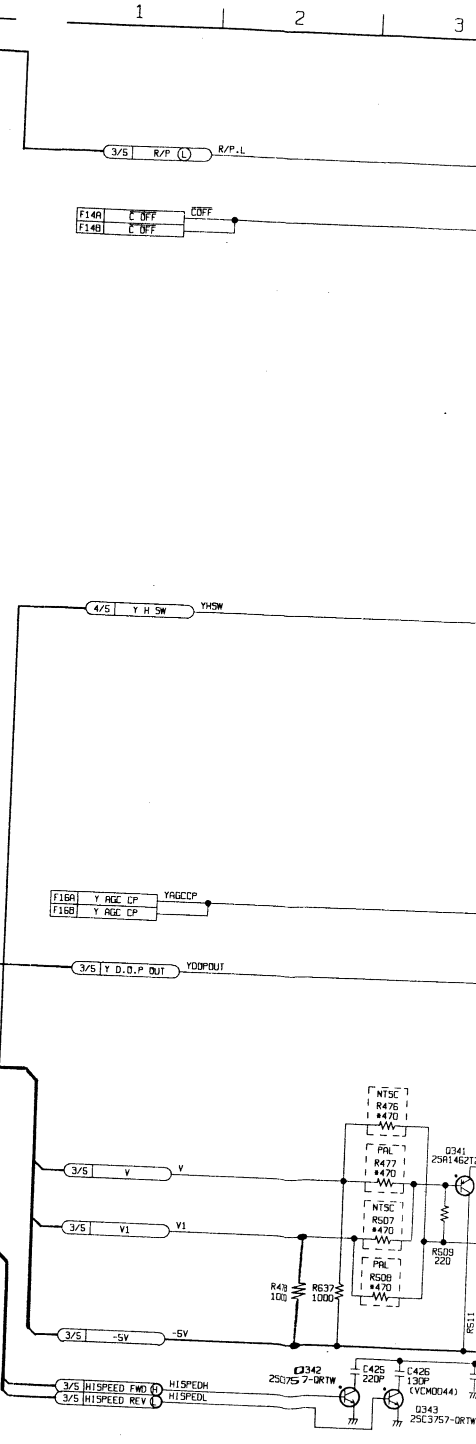

1
2
3
3/5 R/P (L)
F14A C OFF
F14B C OFF
4/5 Y H SW
F16A Y AGC CP
F16B Y AGC CP
3/5 Y D.O.P OUT
3/5 V
3/5 V1
3/5 -5V
3/5 HISPEED FWD
3/5 HISPEED REV

W3 (MODULATION & DEMODULATION) SCHEMATIC DIAGRAM 4/5

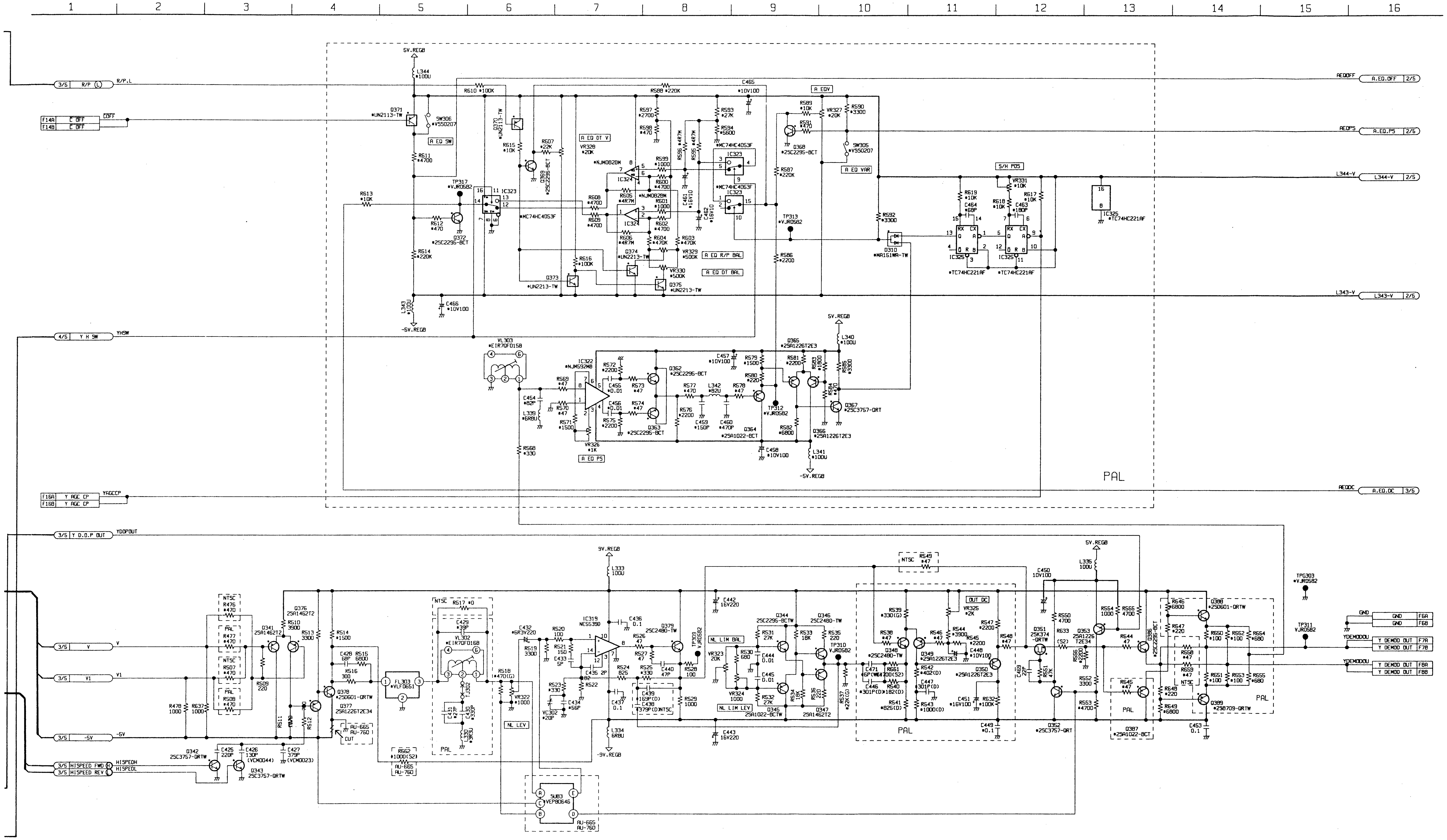
1
2
3
4
5
6
7
8
9
10
11
12
13
14
15
16
3/5 R/P (L)
R/P.L
F14A C OFF
F14B C OFF
COFF
4/5 Y H SW
YHSW
F16A Y AGC CP
F16B Y AGC CP
YAGCCP
3/5 Y D.O.P OUT
YDOPOUT
3/5 V
3/5 V1
3/5 -5V
3/5 HISPEED FWD
3/5 HISPEED REV
HISPEDH
HISPEDL
5V.REG8
-5V.REG8
A EQ SW
A EQ DT V
A EQV
A EQ VAR
S/H POS
A EQ R/P BAL
A EQ DT BAL
A EQ PS
AEQOFF
A.EQ.OFF 2/5
AEQPS
A.EQ.PS 2/5
L344-V
L344-V 2/5
L343-V
L343-V 2/5
AEQDC
A.EQ.DC 3/5
PAL
NTSC
OUT DC
NL LIM BAL
NL LIM LEV
NL LEV
CUT
AU-665
AU-760
GND
GND F6A
GND F6B
YDEMODOU
Y DEMOD OUT F7A
Y DEMOD OUT F7B
Y DEMOD OUT F8A
Y DEMOD OUT F8B
TP303 VJR0582
TP311 VJR0582

= INPUT SIGNAL
= OUTPUT SIGNAL
* = REFER TO THE COMPARISON CHART

W3 (MODULATION

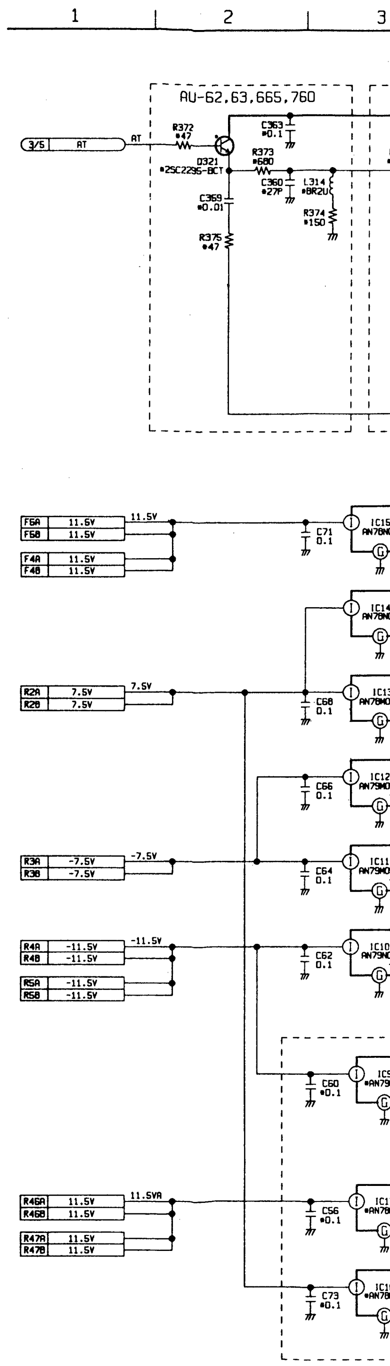
1
2
3
AU-62,63,665,760
3/5 AT
F6A 11.5V
F6B 11.5V
F4A 11.5V
F4B 11.5V
R2A 7.5V
R2B 7.5V
R3A -7.5V
R3B -7.5V
R4A -11.5V
R4B -11.5V
R5A -11.5V
R5B -11.5V
R46A 11.5V
R46B 11.5V
R47A 11.5V
R47B 11.5V

AM 4/5

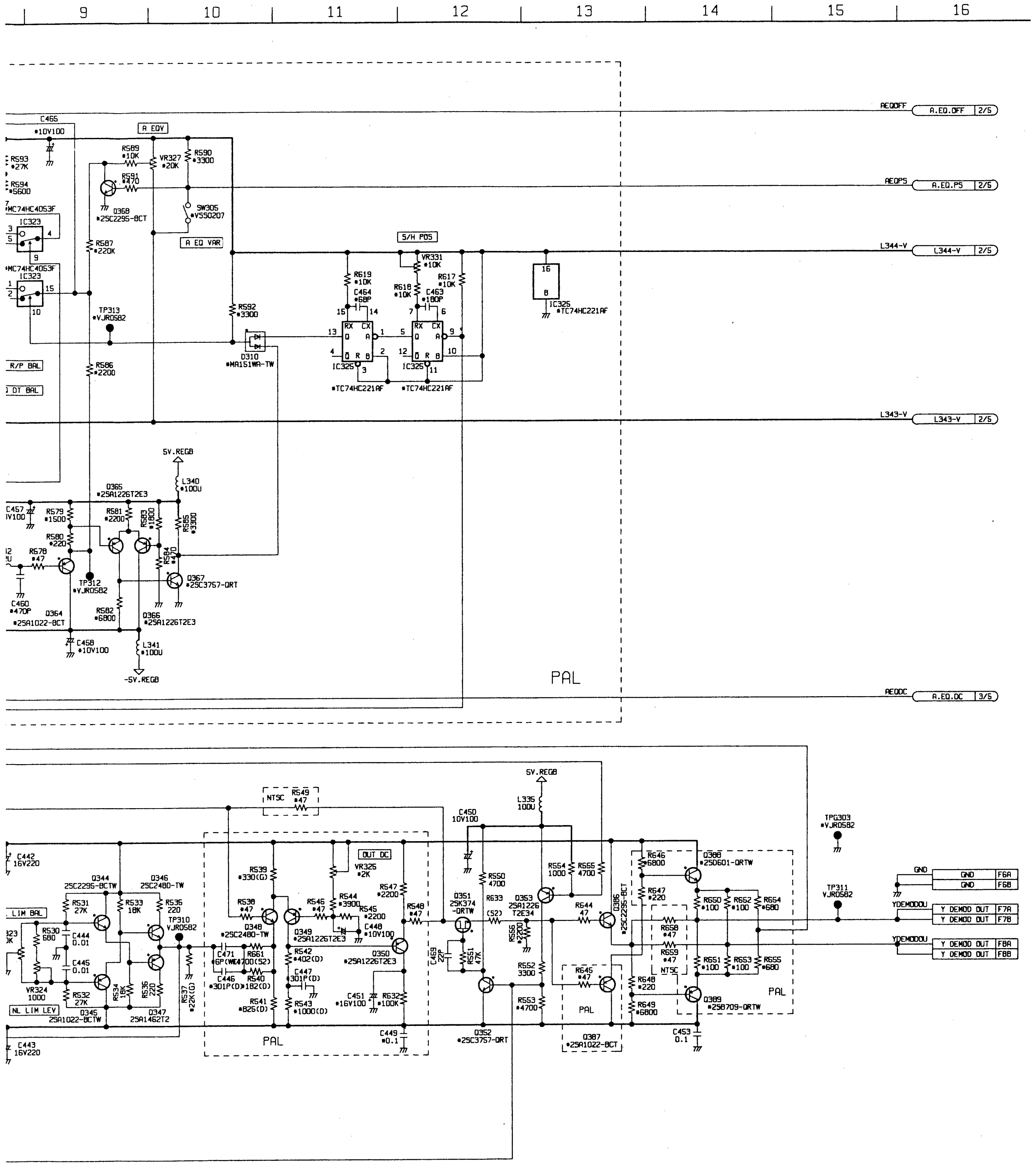

- INPUT SIGNAL
- OUTPUT SIGNAL

* - REFER TO THE COMPARISON CHART

W3 (MODULATION & DEMODULATION) SCHEMATIC DIAGRAM 5/5

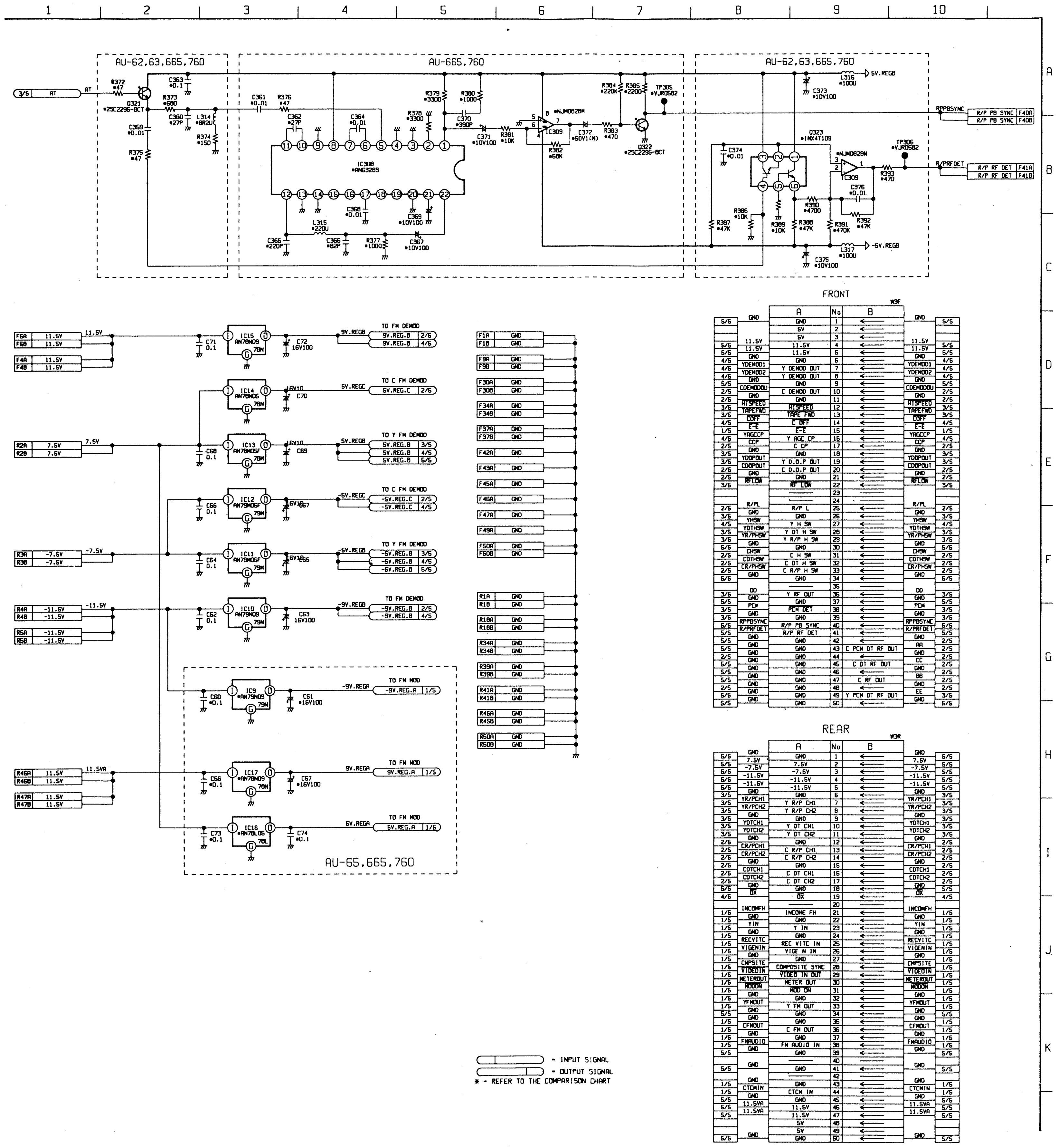

- INPUT SIGNAL
- OUTPUT SIGNAL

* - REFER TO THE COMPARISON CHART

MODEL / TYPE	AU-665	AU-65	AU-63	AU-62
NTSC	VEP83099A	VEP83099A	Not Used	Not Used
PAL	——	VEP83099B	Not Used	Not Used

W4 (DECODER & CTCM) SCHEMATIC DIAGRAM 1/4 [FOR AU-665 NTSC, AU-65]

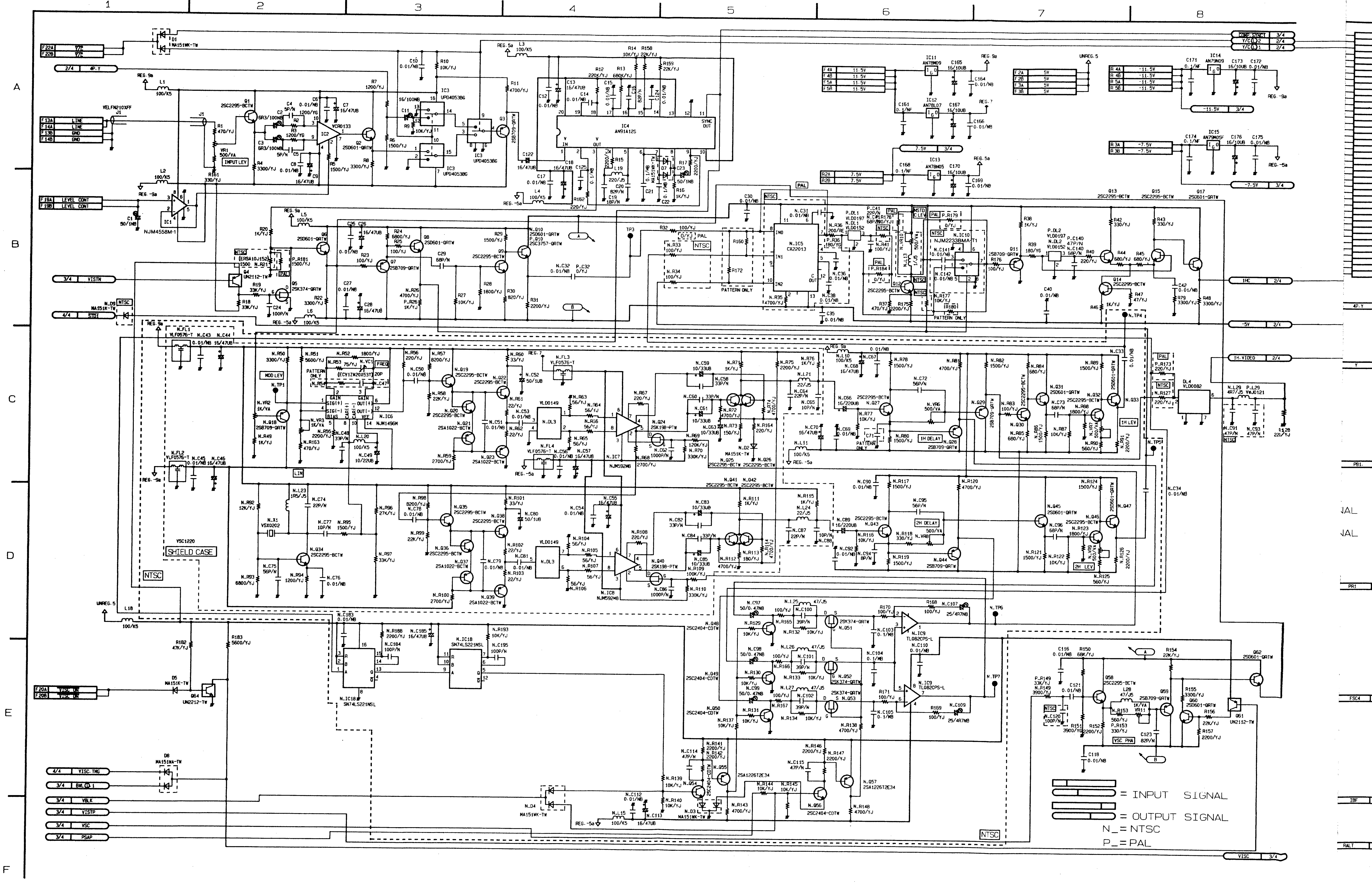

1
2
3
4
5
6
7
8
A
B
C
D
E
F
F22A
F22B
2/4
4P.Y
F13A LINE
F14A LINE
F13B GND
F14B GND
F19A LEVEL CONT
F19B LEVEL CONT
YELFN210XFF J1
INPUT LEV
VR1 500/VA
IC1 NJM4558M-1
IC2 VCR0133
IC3 UPD4053BG
IC4 AN9112S
SYNC OUT
3/4 VISTN
4/4 STDI
N.IC5 CX22013
PATTERN ONLY
N.IC10 NJM2233BMAT1
IC11 AN78M09
IC12 AN78L07
IC13 AN78N05
IC14 AN79M09
IC15 AN79M05F
F4A 11.5V
F4B 11.5V
F5A 11.5V
F5B 11.5V
F2A 5V
F2B 5V
F3A 5V
F3B 5V
R4A -11.5V
R4B -11.5V
R5A -11.5V
R5B -11.5V
R3A -7.5V
R3B -7.5V
R2A 7.5V
R2B 7.5V
-11.5V 3/4
7.5V 3/4
-7.5V 3/4
REG.9a
REG.5a
REG.-5a
REG.-9a
REG.7
UNREG.5
COMP SYNC 3/4
Y/C② 2/4
Y/C① 2/4
1HC 2/4
-5V 2/4
1H.VIDEO 2/4
MOD LEV
N.IC6 NJM1496M
N.DL3
N.IC7 NJM592M8
N.IC8 NJM592M8
1H DELAY
1H LEV
2H DELAY
2H LEV
DL4 VLD0082
VSC1220
SHIELD CASE
NTSC
PAL
LIM
FREQ
N.IC9 TL082CPS-L
N.IC18 SN74LS221NSL
F20A VISC ON
F20B VISC ON
4/4 VISC-TMG
3/4 BWL①1
3/4 VBLK
3/4 VISTP
3/4 VSC
3/4 PSAP
VSC PHA
VISC 3/4
TP3
N.TP1
N.TP4
N.TP5
N.TP6
N.TP7
═══ = INPUT SIGNAL
═══ = OUTPUT SIGNAL
N_= NTSC
P_= PAL

W4 (DECODER & CTCM) SCHEMATIC DIAGRAM 2/4 [FOR AU-665 NTSC, AU-65]

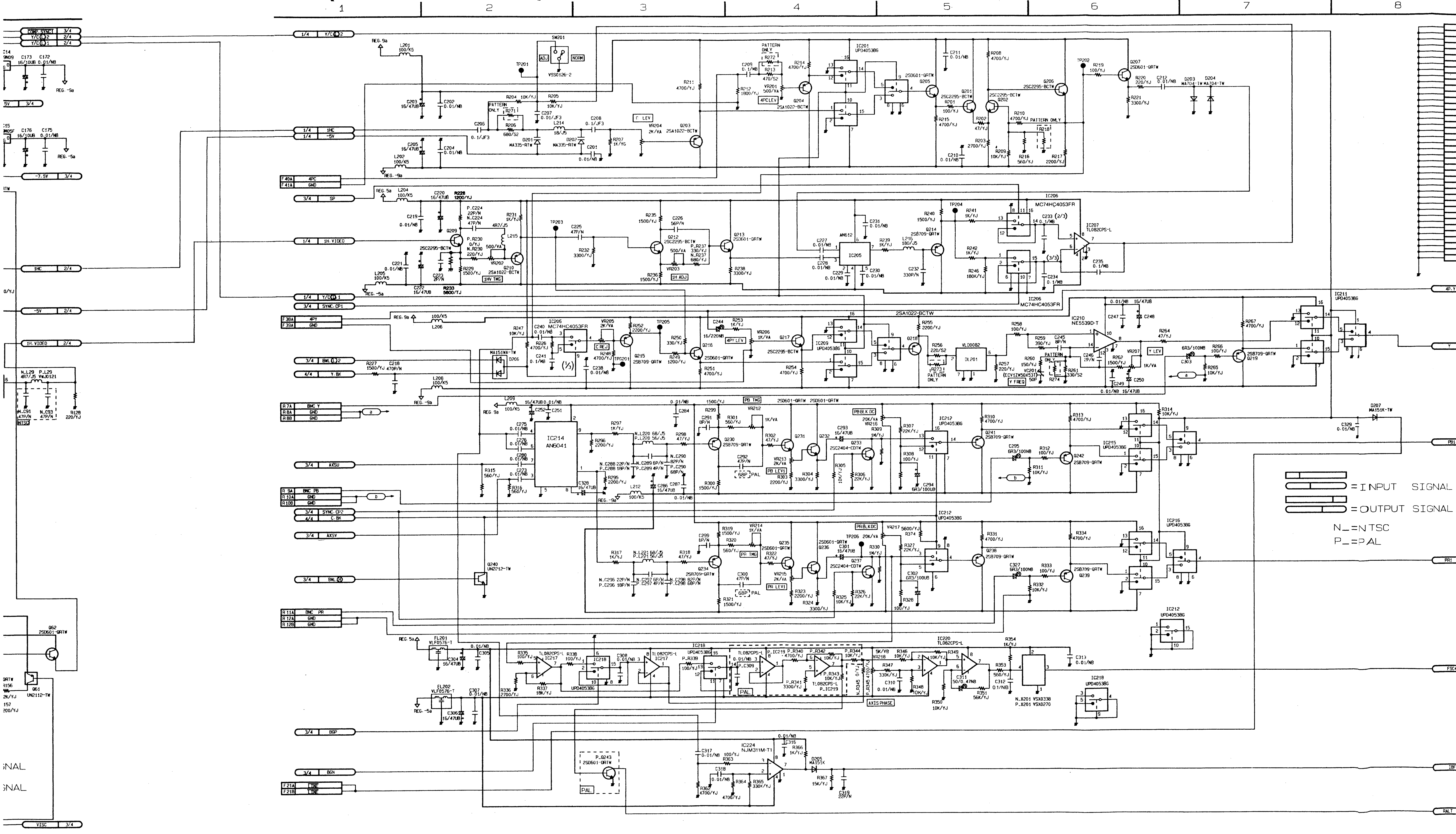

1
2
3
4
5
6
7
8
=INPUT SIGNAL
=OUTPUT SIGNAL
N_=NTSC
P_=PAL
1/4 Y/C(2)
1/4 1HC
1/4 -5V
F40A 4PC
F41A GND
3/4 SP
1/4 1H.VIDEO
1HC 2/4
1/4 Y/C(1)
3/4 SYNC.CP1
-5V 2/4
F38A 4PY
F39A GND
1H.VIDEO 2/4
3/4 BWL(2)
4/4 Y.BK
R7A BNC Y
R8A GND
R8B GND
3/4 AXSU
R9A BNC PB
R10A GND
R10B GND
3/4 SYNC.CP2
4/4 C.BK
3/4 AXSV
3/4 BWL(1)
R11A BNC PR
R12A GND
R12B GND
3/4 BGP
3/4 BGN
F21A LINE
F21B LINE
VISC 3/4
-7.5V 3/4
SW201
ADJ
NORM
YSS0126-2
TP201
TP202
TP203
TP204
TP205
TP206
IC201 UPD4053BG
IC205 AN612
IC206 MC74HC4053FR
IC207 TL082CPS-L
IC209 UPD4053BG
IC210 NE5539D-T
IC211 UPD4053BG
IC212 UPD4053BG
IC214 AN5041
IC215 UPD4053BG
IC216 UPD4053BG
IC217 TL082CPS-L
IC218 UPD4053BG
IC219 TL082CPS-L
IC220 TL082CPS-L
IC224 NJM311M-T1
DL201
VLD0082
FL201 VLF0576-T
FL202 VLF0576-T
PATTERN ONLY
C LEV
4PC LEV
4PY LEV
1H V TMG
1H ADJ
C REJ
Y LEV
Y FREQ
PB TMG
PR TMG
PB LEVEL
PR LEV
PB BLK DC
PR BLK DC
AXIS PHASE
PAL
REG.9a
REG.-9a
REG.5a
REG.-5a
N.X201 VSX0338
P.X201 VSX0270
Q240 UN2212-TW
Q61 UN2112-TW
Q62 2SD601-QRTW
P.Q243 2SD601-QRTW
D207 MA151K-TW
D205 MA151K
4P.Y
Y
PB1
PR1
FSC
RALT

HEMATIC DIAGRAM 2/4 [FOR AU-665 NTSC, AU-65]

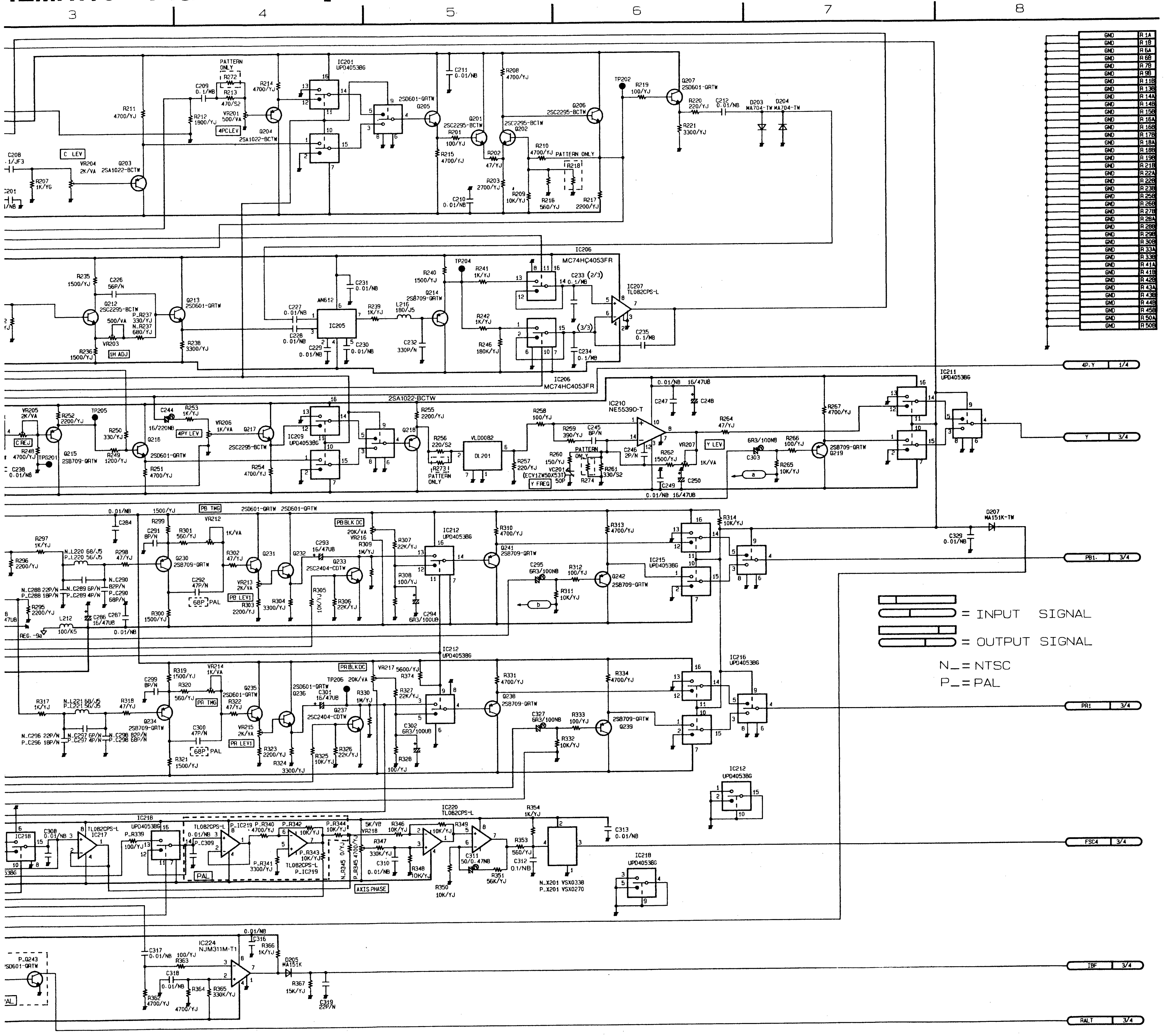
3
4
5
6
7
8
IC201 UPD4053BG
IC205 AN612
IC206 MC74HC4053FR
IC207 TL082CPS-L
IC209 UPD4053BG
IC210 NE5539D-T
IC211 UPD4053BG
IC212 UPD4053BG
IC215 UPD4053BG
IC216 UPD4053BG
IC217 TL082CPS-L
IC218 UPD4053BG
IC219 TL082CPS-L
IC220 TL082CPS-L
IC224 NJM311M-T1
DL201 VLD0082
PATTERN ONLY
4PCLEV
C LEV
1H ADJ
4PY LEV
C REJ
Y LEV
Y FREQ
PB TMG
PB LEV
PB BLK DC
PR TMG
PR LEV
PR BLK DC
AXIS PHASE
PAL
N.X201 VSX0338
P.X201 VSX0270
4P.Y 1/4
Y 3/4
PB1 3/4
PR1 3/4
FSC4 3/4
IBF 3/4
RALT 3/4
= INPUT SIGNAL
= OUTPUT SIGNAL
N_ = NTSC
P_ = PAL

FRONT

VJP2898B100

A		B
GND	1	←
5V	2	←
5V	3	←
11.5V	4	←
11.5V	5	←
GND	6	←
GND	7	←
GND	8	←
GND	9	←
GND	10	←
	11	GND
GND	12	GND
LINE	13	GND
LINE	14	GND
	15	
	16	
	17	
GND	18	←
LEVEL CONT	19	←
$\overline{\text{VISC ON}}$	20	←
$\overline{\text{LINE}}$	21	←
$\overline{\text{Y/C}}$	22	←
GND	23	←
	24	
	25	
	26	
	27	
	28	
	29	
	30	
	31	
	32	
	33	
	34	
	35	
	36	
GND	37	←
4P Y	38	GND
GND	39	←
4P C	40	GND
GND	41	←
GND	42	←
GND	43	←
GND	44	←
GND	45	←
GND	46	←
GND	47	←
GND	48	←
GND	49	←
GND	50	←

REAR

VJP2898B100

A		B
GND	1	←
7.5V	2	←
-7.5V	3	←
-11.5V	4	←
-11.5V	5	←
GND	6	←
BNC Y	7	GND
GND	8	←
BNC PB	9	GND
GND	10	←
BNC PR	11	GND
GND	12	←
	13	GND
GND	14	←
	15	GND
GND	16	←
	17	GND
GND	18	←
	19	GND
	20	
	21	GND
GND	22	←
Y	23	GND
GND	24	←
$\overline{\text{VIGE}}$	25	GND
VIGE N	26	GND
$\overline{\text{COMP SYNC}}$	27	GND
GND	28	GND
$\overline{\text{DUB Y DOP}}$	29	GND
$\overline{\text{DUB C DOP}}$	30	GND
	31	
	32	
GND	33	GND
$\overline{\text{IN SCH}}$	34	$\overline{\text{N-STD AUTO}}$
$\overline{\text{CPNT CF ON}}$	35	$\overline{\text{STD}}$
LINE CF	36	COPNT CF
$\overline{\text{VP REC}}$	37	C CLAMP
$\overline{\text{DUB}}$	38	$\overline{\text{VIDEO IN}}$
	39	
	40	
GND	41	←
DUB CTCM	42	GND
GND	43	←
CTCM	44	GND
GND	45	←
14.5V	46	←
11.5V	47	←
5V	48	←
5V	49	←
GND	50	←

MODEL TYPE	AU-665	AU-65	AU-63	AU-62
NTSC	VEP83099A	VEP83099A	Not Used	Not Used
PAL	———	VEP83099B	Not Used	Not Used

W4 (DECODER & CTCM) SCHEMATIC DIAGRAM 3/4 [FOR AU-665 NTSC, AU-65]

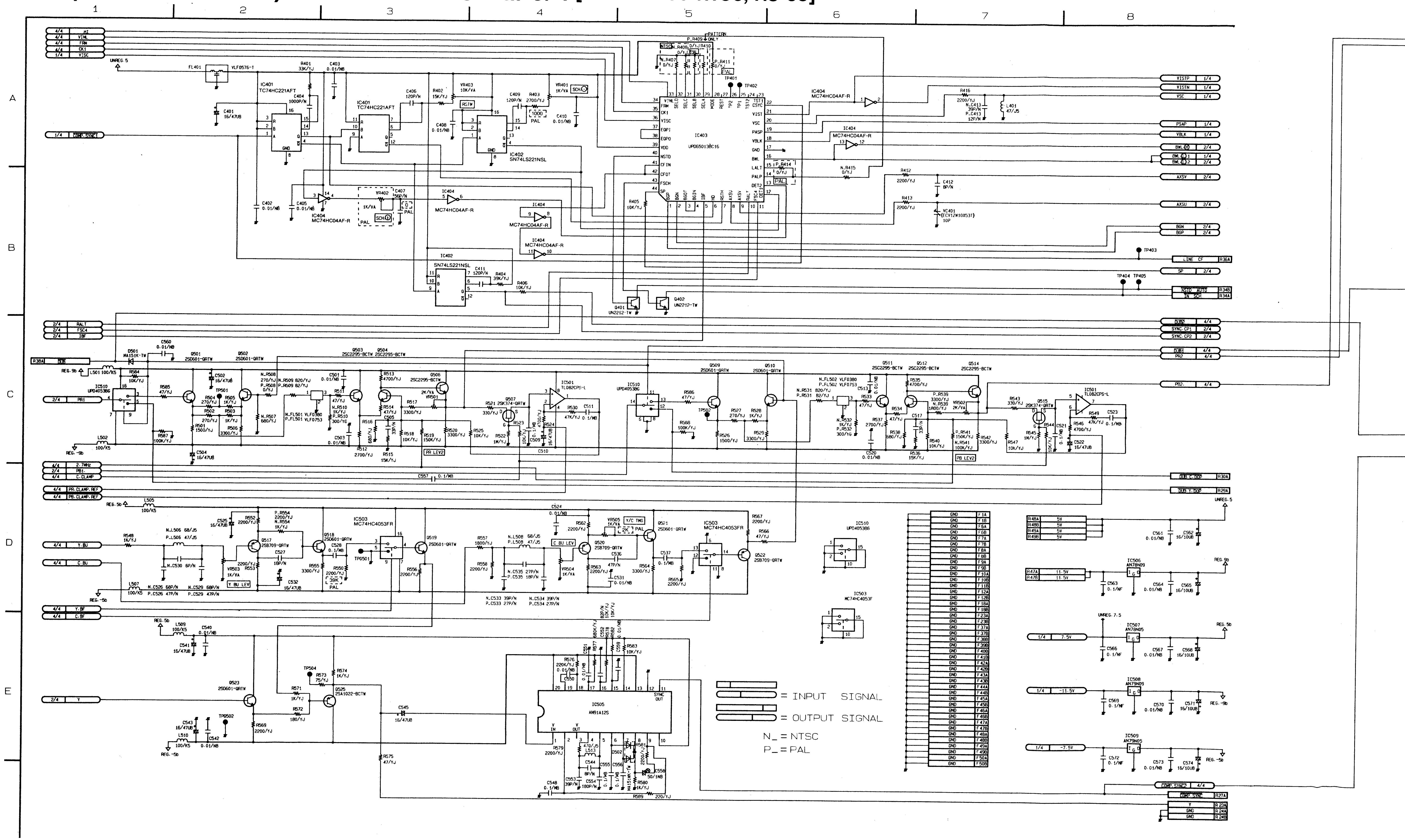
1
2
3
4
5
6
7
8
A
B
C
D
E
IC401 TC74HC221AFT
IC402 SN74LS221NSL
IC403 UPD6501 3GC16
IC404 MC74HC04AF-R
IC501 TL082CPS-L
IC503 MC74HC4053FR
IC505 AN91A12S
IC506 AN78N09
IC507 AN78N05
IC508 AN79N09
IC509 AN79N05
IC510 UPD4053BG
Q401 UN2212-TW
Q402 UN2212-TW
Q501 2SD601-QRTW
Q502 2SD601-QRTW
Q503 2SC2295-BCTW
Q504 2SC2295-BCTW
Q506 2SC2295-BCTW
Q507 2SK374-QRTW
Q509 2SD601-QRTW
Q510 2SD601-QRTW
Q511 2SC2295-BCTW
Q512 2SC2295-BCTW
Q514 2SC2295-BCTW
Q515 2SK374-QRTW
Q517 2SB709-QRTW
Q518 2SD601-QRTW
Q519 2SD601-QRTW
Q520 2SB709-QRTW
Q521 2SD601-QRTW
Q522 2SB709-QRTW
Q523 2SD601-QRTW
Q525 2SA1022-BCTW
D501 MA151K-TW
FL401 VLF0576-T
UNREG. 5
REG. 9b
REG. -9b
REG. 5b
REG. -5b
UNREG. 7.5
COMP. SYNC1
COMP. SYNC2
VISTP
VISTN
VSC
PSAP
VBLK
BWL
AXSV
AXSU
BGN
BGP
LINE CF
SP
NSTD AUTO
IN SCH
PR1
PB1
PR2
PB2
Y. BU
C. BU
Y. BF
C. BF
Y
2.7MHz
C. CLAMP
PR. CLAMP. REF
PB. CLAMP. REF
DUB C. TOP
DUB Y. TOP
PR LEV2
PB LEV2
Y BU LEV
C BU LEV
Y/C TMG
PATTERN ONLY
TP401
TP402
TP403
TP404
TP405
TP501
TP502
TP504
TP5501
TP5502
= INPUT SIGNAL
= OUTPUT SIGNAL
N_ = NTSC
P_ = PAL

W4 (DECODER & CTCM) SCHEMATIC DIAGRAM 4/4 [FOR AU-665 NTSC, AU-65]

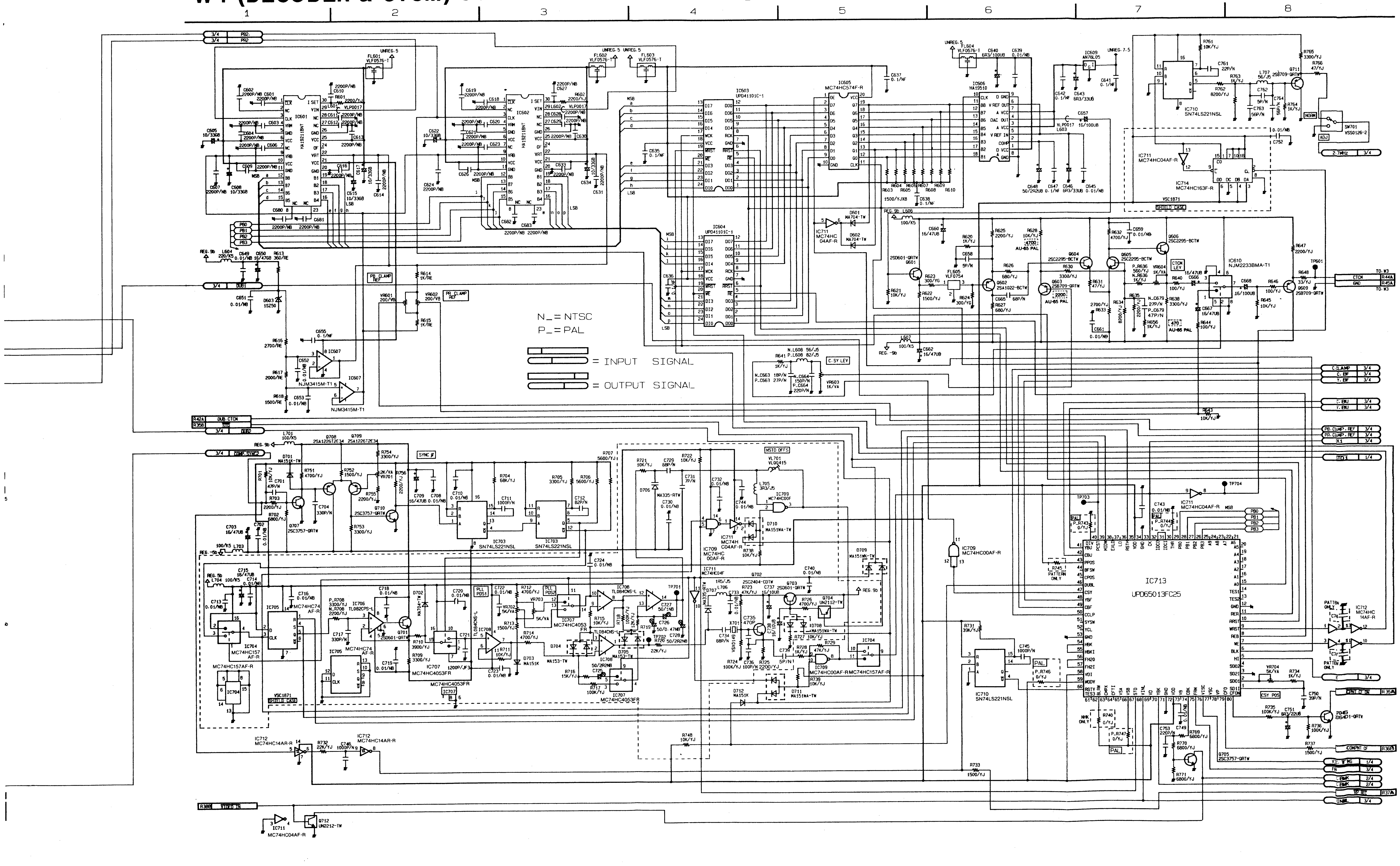
1
2
3
4
5
6
7
8
N_=NTSC
P_=PAL
= INPUT SIGNAL
= OUTPUT SIGNAL
3/4 PB2
3/4 PR2
PB0
PB1
PB2
PB3
3/4 DUB1
R42A DUB. CTCM
R35B STD
3/4 DUB2
3/4 COMP. SYNC2
UNREG. 5
FL601 VLF0576-T
FL602 VLF0576-T
FL603 VLF0576-T
FL604 VLF0576-T
FL605 VLF0754
IC601 HA19218NT
IC602 HA19218NT
IC603 UPD41101C-1
IC604 UPD41101C-1
IC605 MC74HC574F-R
IC506 HA19510
IC609 AN78L05
IC607 NJM3415M-T1
IC610 NJM2233BMA-T1
IC703 SN74LS221NSL
IC704 MC74HC157AF-R
IC705 MC74HC74AF-R
IC706 TL082CPS-L
IC707 MC74HC4053FR
IC708 TL084CNS-L
IC709 MC74HC00AF-R
IC710 SN74LS221NSL
IC711 MC74HC04AF-R
IC712 MC74HC14AR-R
IC713 UPD65013FC25
IC714 MC74HC163F-R
VSC1871
SHIELD CASE
PB CLAMP REF
VR601 200/VB
VR602 200/VB
VR603 1K/VA
VR701
VR702 5K/VA
VR703 5K/VA
VR704 5K/VA
VL701 VL00415
NSTD OFFS
SYNC
PLL POS1
PLL POS2
C.SY LEV
CTCM LEV
AU-65 PAL
PATTERN ONLY
NORM
ADJ
SW701 VSS0126-2
2.7MHz 3/4
CTCM R44A
GND R45A
TO: W3
C.CLAMP 3/4
C.EBF 3/4
Y.EBF 3/4
C.BU 3/4
Y.BU 3/4
PB.CLAMP.REF 3/4
PR.CLAMP.REF 3/4
X1 3/4
TD1 1/4
CSY POS
COMPNT CF IN R35A
COMPNT CF R36B
V.SYNC 1/4
FR 3/4
C.EMR 2/4
L.EMR 2/4
VD SEL R37A
INHB 3/4
R38B VIDEO IN
REG. 9b
REG. 5b
TP601
TP701
TP702
TP703
TP704
Q601 2SD601-QRTW
Q602 2SA1022-BCTW
Q603 2SB709-QRTW
Q604 2SC2295-BCTW
Q605 2SC2295-BCTW
Q606 2SC2295-BCTW
Q609 2SB709-QRTW
Q701 2SD601-QRTW
Q702 2SC2404-CDTW
Q703 2SD601-QRTW
Q704 UN2112-TW
Q705 2SC3757-QRTW
Q707 2SC3757-QRTW
Q708 2SA1226TE34
Q709 2SA1226TE34
Q710 2SC3757-QRTW
Q711 2SB709-QRTW
Q712 UN2212-TW
D601 MA704-TW
D602 MA704-TW
D603 1SZ50
D701 MA151K-TW
D703 MA151K
D705 MA153-TW
D706 MA335-RTW
D709 MA151WK-TW
D710 MA151WA-TW
D711 MA151WA-TW
D712 MA151K
X701 VSX0149
MSB
LSB

C DIAGRAM 4/4 [FOR AU-665 NTSC, AU-65]

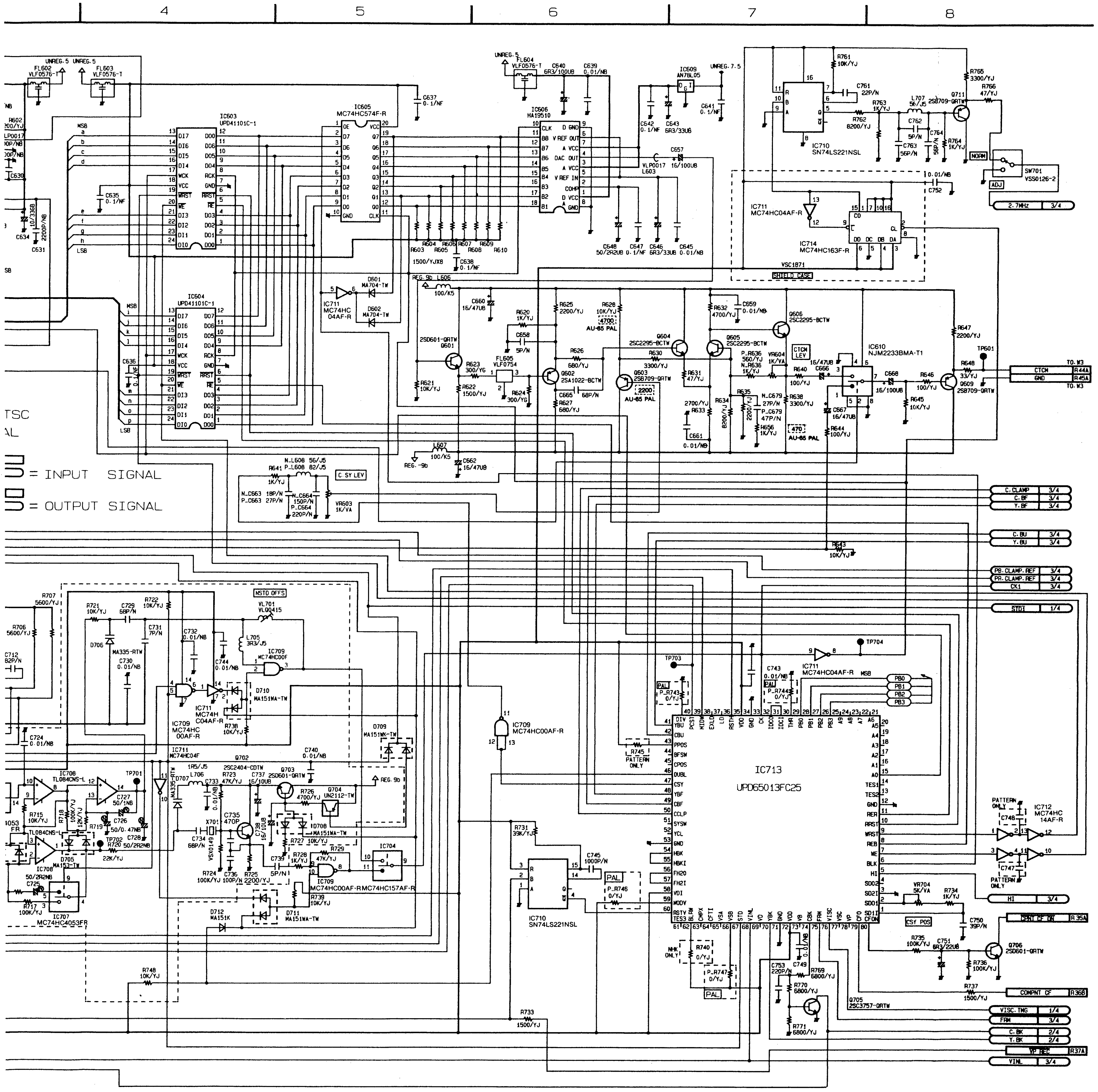

4
5
6
7
8
= INPUT SIGNAL
= OUTPUT SIGNAL
IC503 UPD41101C-1
IC504 UPD41101C-1
IC505 MC74HC574F-R
IC506 HA19510
IC609 AN78L05
IC710 SN74LS221NSL
IC711 MC74HC04AF-R
IC714 MC74HC163F-R
IC610 NJM2233BMA-T1
IC713 UPD65013FC25
IC709 MC74HC00AF-R
IC712 MC74HC 14AF-R
IC708 TL084CNS-L
IC707 MC74HC4053FR
IC704
SW701 VSS0126-2
SHIELD CASE
VSC1871
2.7MHz 3/4
C.CLAMP 3/4
C.BF 3/4
Y.BF 3/4
C.BU 3/4
Y.BU 3/4
PB.CLAMP.REF 3/4
PR.CLAMP.REF 3/4
CK1 3/4
STD1 1/4
HI 3/4
CPNT CF ON R35A
COMPNT CF R36B
VISC.TNG 1/4
FRM 3/4
C.BK 2/4
Y.BK 2/4
VP REC R37A
YINL 3/4
CTCM R44A
GND R45A
TO.W3
NSTD OFFS
C SY LEV
CSY POS
PATTERN ONLY
AU-65 PAL
NHK ONLY

FRONT A	VJP2898B100	B
GND	1	←
5V	2	←
5V	3	←
11.5V	4	←
11.5V	5	←
GND	6	←
GND	7	←
GND	8	←
GND	9	←
GND	10	←
	11	GND
GND	12	GND
LINE	13	GND
LINE	14	GND
	15	
	16	
	17	
GND	18	←
LEVEL CONT	19	←
$\overline{\text{VISC ON}}$	20	←
$\overline{\text{LINE}}$	21	←
$\overline{\text{Y/C}}$	22	←
GND	23	←
	24	
	25	
	26	
	27	
	28	
	29	
	30	
	31	
	32	
	33	
	34	
	35	
	36	
GND	37	←
4P Y	38	GND
GND	39	←
4P C	40	GND
GND	41	←
GND	42	←
GND	43	←
GND	44	←
GND	45	←
GND	46	←
GND	47	←
GND	48	←
GND	49	←
GND	50	←

REAR A	VJP2898B100	B
GND	1	←
7.5V	2	←
-7.5V	3	←
-11.5V	4	←
-11.5V	5	←
GND	6	←
BNC Y	7	GND
GND	8	←
BNC PB	9	GND
GND	10	←
BNC PR	11	GND
GND	12	←
	13	GND
GND	14	←
	15	GND
GND	16	←
	17	GND
GND	18	←
	19	GND
	20	
	21	GND
GND	22	←
Y	23	GND
GND	24	←
$\overline{\text{VIGE}}$	25	GND
VIGE N	26	GND
$\overline{\text{COMP SYNC}}$	27	GND
GND	28	GND
$\overline{\text{DUB Y DOP}}$	29	GND
$\overline{\text{DUB C DOP}}$	30	GND
	31	
	32	
GND	33	GND
$\overline{\text{IN SCH}}$	34	$\overline{\text{N-STD AUTO}}$
$\overline{\text{CPNT CF ON}}$	35	$\overline{\text{STD}}$
LINE CF	36	COPNT CF
$\overline{\text{VP REC}}$	37	C CLAMP
$\overline{\text{DUB}}$	38	$\overline{\text{VIDEO IN}}$
	39	
	40	
GND	41	←
DUB CTCM	42	GND
GND	43	←
CTCM	44	GND
GND	45	←
14.5V	46	←
11.5V	47	←
5V	48	←
5V	49	←
GND	50	←

MODEL / TYPE	AU-665	AU-65	AU-63	AU-62
NTSC	VEP82061B	VEP82061A	VEP82061D	VEP82061C
PAL	VEP82061G	VEP82061E	VEP82061F	VEP82061E

W5 (SERVO) SCHEMATIC DIAGRAM 1/8 (DRUM SERVO)

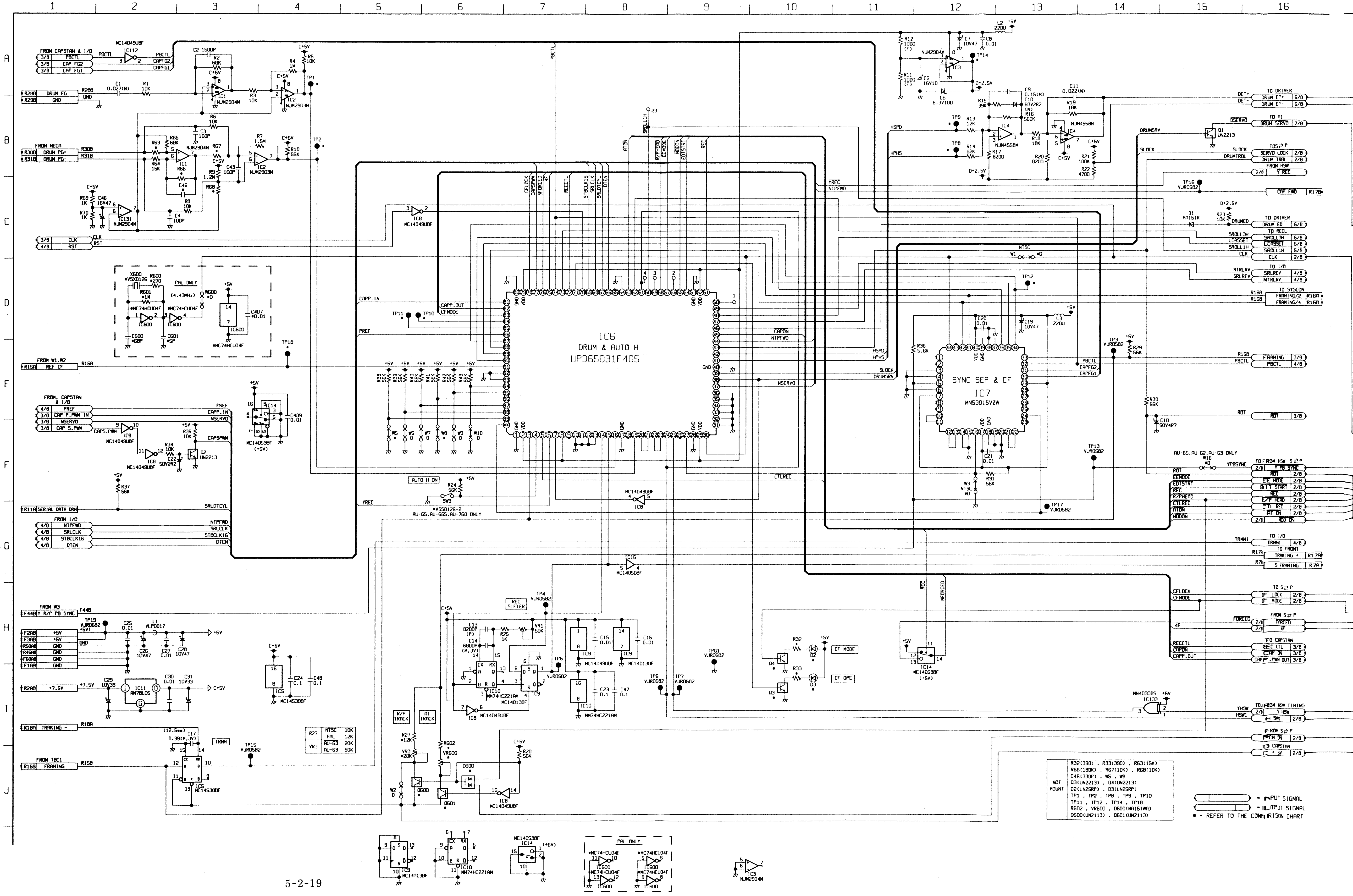

1 2 3 4 5 6 7 8 9 10 11 12 13 14 15 16
A B C D E F G H I J
FROM CAPSTAN & I/O
PBCTL
CAP FG2
CAP FG1
DRUM FG
FROM MECA
DRUM PG+
DRUM PG-
CLK
RST
FROM W1.W2
REF CF
FROM CAPSTAN & I/O
PREF
CAP P.PWM IN
NSERVO
CAP S.PWM
SERIAL DATA DRM
FROM I/O
NTPFWD
SRLCLK
STBCLK16
DTEN
FROM W3
Y R/P PB SYNC
+5V
GND
+7.5V
TRAKING -
FROM TBC1
FRAMING
PAL ONLY
IC6
DRUM & AUTO H
UPD65031F405
SYNC SEP & CF
IC7
MN53015VZW
AUTO H ON
REC SIFTER
R/P TRACK
AT TRACK
TRKM
CF MODE
CF OPE
TO DRIVER
DRUM E1+
DRUM E1-
TO A1
DRUM SERVO
TO S⇄P
SERVO LOCK
DRUM TRBL
FROM HSW
Y REC
CAP FWD
DRUM ED
TO REEL
SRLLL3H
LCRSSET
SRLLL1H
CLK
TO I/O
SRLREV
NTRLRV
TO SYSCON
FRAMING/2
FRAMING/4
FRAMING
PBCTL
RDT
TO/FROM HSW S⇄P
Y PB SYNC
EE MODE
DIT START
REC
R/P HEAD
CTL REC
AT ON
MOD ON
TO I/O
TRMN1
TO FRONT
TRAKING +
S FRAMING
TO S⇄P
CF LOCK
CF MODE
FROM S⇄P
FORCED
4F
TO CAPSTAN
REC CTL
CAP ON
CAP P.PWM OUT
TO/FROM HSW TIMING
Y HSW
H SW1
FROM S⇄P
PCM ON
TO CAPSTAN
+5V

R27	NTSC	10K
	PAL	12K
VR3	$\overline{\text{AU-63}}$	20K
	AU-63	50K

NOT MOUNT	
	R32(390) , R33(390) , R63(15K)
	R66(180K) , R67(10K) , R68(10K)
	C45(330P) , W5 , W8
	Q3(UN2213) , Q4(UN2213)
	D2(LN25RP) , D3(LN25RP)
	TP1 , TP2 , TP8 , TP9 , TP10
	TP11 , TP12 , TP14 , TP18
	R602 , VR600 , D600(MA151WA)
	Q600(UN2113) , Q601(UN2113)

= INPUT SIGNAL

= OUTPUT SIGNAL

* = REFER TO THE COMPARISON CHART

W5 (SERVO) SCHEMATIC DIAGRAM 2/8 (HSW, S/P)

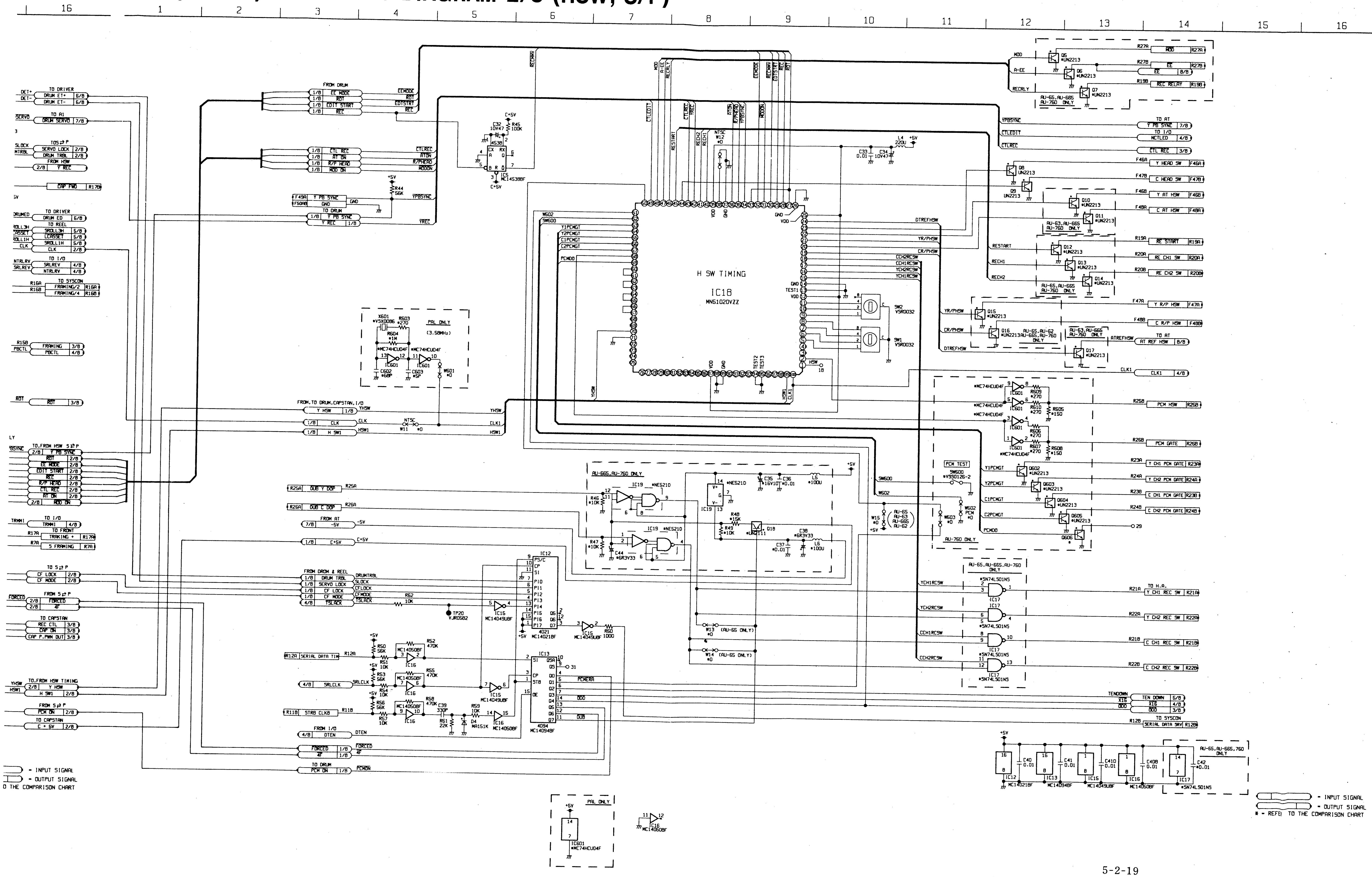
16
1
2
3
4
5
6
7
8
9
10
11
12
13
14
15
16
TO DRIVER
DRUM ET+ 6/8
DRUM ET- 6/8
TO AI
DRUM SERVO 7/8
TO S⇄P
SERVO LOCK 2/8
DRUM TRBL 2/8
FROM HSW
Y REC 2/8
CAP FWD R17B
TO DRIVER
DRUM ED 6/8
TO REEL
SROLL3H 5/8
CASSET 5/8
SROLL1H 5/8
CLK 2/8
TO I/O
SRLREV 4/8
NTRLRV 4/8
TO SYSCON
FRAMING/2 R16A
FRAMING/4 R16B
FRAMING 3/8
PBCTL 4/8
RDT 3/8
TO.FROM HSW S⇄P
Y PB SYNC 2/8
RDT 2/8
EE MODE 2/8
EDIT START 2/8
REC 2/8
R/P HEAD 2/8
CTL REC 2/8
AT ON 2/8
MOD ON 2/8
TO I/O
TRMM1 4/8
TO FRONT
TRAKING + R17A
S FRAMING R7A
TO S⇄P
CF LOCK 2/8
CF MODE 2/8
FROM S⇄P
FORCED 2/8
4F 2/8
TO CAPSTAN
REC CTL 3/8
CAP ON 3/8
CAP F.PWM OUT 3/8
TO.FROM HSW TIMING
Y HSW 2/8
H SW1 2/8
FROM S⇄P
PCM ON 2/8
TO CAPSTAN
C + 6V 2/8
FROM DRUM
EE MODE 1/8
RDT 1/8
EDIT START 1/8
REC 1/8
CTL REC 1/8
AT ON 1/8
R/P HEAD 1/8
MOD ON 1/8
Y PB SYNC
GND
TO DRUM
Y PB SYNC 1/8
Y REC 1/8
IC5 MC14538BF
C32 10V47
R45 100K
R44 56K
X601 *VSX0086
R603 *270
R604 *1M
PAL ONLY
(3.58MHz)
*MC74HCU04F
IC601
C602 *68P
C603 *5P
W601 *0
FROM.TO DRUM.CAPSTAN.I/O
Y HSW 1/8
CLK 1/8
H SW1 1/8
NTSC
W11 *0
H SW TIMING
IC18
MN51020VZZ
L4 220U +5V
C33 0.01
C34 10V47
SW2 VSR0032
SW1 VSR0032
HSW 18
AU-665,AU-760 ONLY
IC19 *NE5210
R46 *10K
R47 *10K
C44 *6R3V33
C35 16V10
C36 *0.01
L5 *100U
R48 *15K
R49 *10K
D18 *UN2111
C38 *6R3V33
C37 *0.01
L6 *100U
DUB Y DOP R25A
DUB C DOP R26A
FROM AT
-5V 7/8
C+5V 1/8
W15 *0
AU-65 AU-63 AU-665 AU-62
W603 *0
W602 *0
PCM TEST
SW600 *VSS0126-2
IC12 4021 MC14021BF
FROM DRUM & REEL
DRUM TRBL 1/8
SERVO LOCK 1/8
CF LOCK 1/8
CF MODE 1/8
TSLACK 4/8
R62 10K
TP20 YJR0SB2
IC15 MC14049UBF
R60 1000
W13 *0 (AU-65 ONLY)
W14 *0 (AU-65 ONLY)
SERIAL DATA TX R12A
SRLCLK 4/8
STRB CLKB R11B
R50 56K
R51 10K
R52 470K
R53 56K
R54 10K
R55 470K
R56 56K
R57 10K
R58 470K
C39 330P
R59 10K
R61 22K
D4 MA151K
IC16 MC14050BF
IC13 4094 MC14094BF
FROM I/O
DTEN 4/8
FORCED 1/8
4F 1/8
TO DRUM
PCM ON 1/8
Q5 *UN2213
Q6 *UN2213
Q7 *UN2213
MOD R27A
EE R27B 8/8
REC RELAY R19B
AU-65,AU-665 AU-760 ONLY
TO AT
Y PB SYNC 7/8
TO I/O
NCTLED 4/8
CTL REC 3/8
Y HEAD SW F46A
C HEAD SW F47B
Y AT HSW F46B
C AT HSW F48A
Q8 UN2213
Q9 UN2213
Q10 *UN2213
Q11 *UN2213
AU-63,AU-665 AU-760 ONLY
RE START R19A
RE CH1 SW R20A
RE CH2 SW R20B
Q12 *UN2213
Q13 *UN2213
Q14 *UN2213
AU-65,AU-665 AU-760 ONLY
Y R/P HSW F47A
C R/P HSW F48B
Q15 *UN2213
Q16 *UN2213
AU-65,AU-62 AU-665,AU-760 ONLY
Q17 *UN2213
TO AT
AT REF HSW 8/8
CLK1 4/8
R609 *270
R610 *270
R605 *150
R606 *270
R607 *270
R608 *150
PCM HSW R25B
PCM GATE R26B
Q602 *UN2213
Q603 *UN2213
Q604 *UN2213
Q605 *UN2213
Q606
Y CH1 PCM GATE R23A
Y CH2 PCM GATE R24A
C CH1 PCM GATE R23B
C CH2 PCM GATE R24B
29
AU-760 ONLY
AU-65,AU-665,AU-760 ONLY
*SN74LS01NS
IC17
TO H.A.
Y CH1 REC SW R21A
Y CH2 REC SW R22A
C CH1 REC SW R21B
C CH2 REC SW R22B
TEN DOWN 6/8
X16 4/8
ODD 3/8
TO SYSCON
SERIAL DATA RX R12B
C40 0.01
C41 0.01
C410 0.01
C408 0.01
C42 *0.01
MC14021BF
MC14094BF
MC14049UBF
MC14050BF
*SN74LS01NS
AU-65,AU-665,760 ONLY
PAL ONLY
IC601 *MC74HCU04F
IC16 MC14050BF

= INPUT SIGNAL

= OUTPUT SIGNAL

D THE COMPARISON CHART

= INPUT SIGNAL

= OUTPUT SIGNAL

* = REFER TO THE COMPARISON CHART

SERVO
SCHEMATIC DIAGRAM

MODEL / TYPE	AU-665	AU-65	AU-63	AU-62
NTSC	VEP82061B	VEP82061A	VEP82061D	VEP82061C
PAL	VEP82061G	VEP82061E	VEP82061F	VEP82061E

W5 (SERVO) SCHEMATIC DIAGRAM 3/8 (CAPSTAN SERVO)

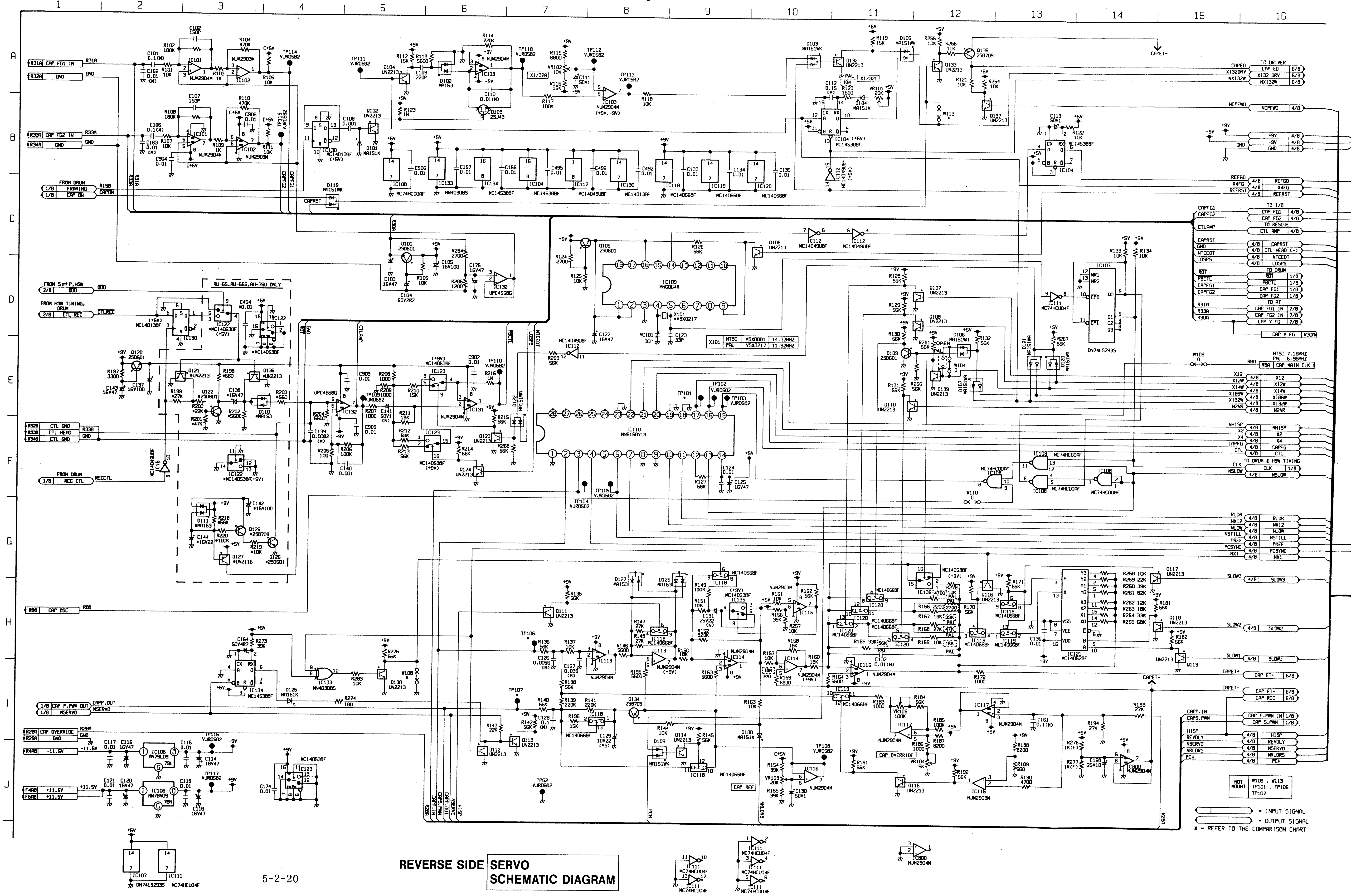

1
2
3
4
5
6
7
8
9
10
11
12
13
14
15
16
A
B
C
D
E
F
G
H
I
J
R31A CAP FG1 IN
R32A GND
R33A CAP FG2 IN
R34A GND
1/8 FRAMING
1/8 CAP ON
FROM S ⇄ P, HSW
2/8 DDD
FROM HSW TIMING, DRUM
2/8 CTL REC
AU-65, AU-665, AU-760 ONLY
R32B CTL GND
R33B CTL HEAD
R34B CTL GND
FROM DRUM
1/8 REC CTL
R8B CAP OSC
1/8 CAP P.PWM OUT
1/8 NSERVO
R28A CAP OVERRIDE
R29A GND
R4AB -11.6V
F4AB +11.5V
F5AB +11.5V
IC105 AN79L09
IC106 AN78M09
IC101 NJM2904M
IC102 NJM2903M
IC103 NJM2904M
IC104 MC14538BF
IC107 DN74LS2935
IC108 MC74HC00AF
IC109 MN6064R
IC110 MN6168V1A
IC111 MC74HCU04F
IC112 MC14049UBF
IC113 NJM2904M
IC114 NJM2904M
IC115 NJM2904M
IC116 NJM2904M
IC117 NJM2904M
IC118 MC14066BF
IC119 MC14066BF
IC120 MC14066BF
IC121 MC14052BF
IC122 MC14053BF
IC123 MC14053BF
IC130 MC14013BF
IC131 NJM2904M
IC132 UPC4558G
IC133 MN4030BS
IC134 MC14538BF
IC135 MC14053BF
IC800 NJM2904M
X101 NTSC VSX0081 14.32MHZ
X101 PAL VSX0217 11.92MHZ
X1/32A
X1/32C
TO DRIVER
CAPED 6/8 CAP ED
X132DRV 6/8 X132 DRV
NX132W 6/8 NX132W
NCPFWD 4/8 NCPFWD
+9V 4/8 +9V
-9V 4/8 -9V
GND 4/8 GND
REF60 4/8 REF60
X4FG 4/8 X4FG
REFRST 4/8 REFRST
TO I/O
CAPFG1 4/8 CAP FG1
CAPFG2 4/8 CAP FG2
TO RESCUE
CTLAMP 4/8 CTL AMP
CAPRST 4/8 CAPRST
GND 4/8 CTL HEAD (-)
NTCEDT 4/8 NTCEDT
LOSPS 4/8 LOSPS
TO DRUM
RDT 1/8 RDT
PBCTL 1/8 PBCTL
CAPFG1 1/8 CAP FG1
CAPFG2 1/8 CAP FG2
TO AT
R31A 7/8 CAP FG1 IN
R33A 7/8 CAP FG2 IN
R30A 7/8 CAP V FG
CAP V FG R30A
NTSC 7.16MHZ PAL 5.96MHZ
R8A CAP MAIN CLK
X12 4/8 X12
X12W 4/8 X12W
X14W 4/8 X14W
X186W 4/8 X186W
X132W 4/8 X132W
N2NR 4/8 N2NR
NHISP 4/8 NHISP
X2 4/8 X2
X4 4/8 X4
CAPFG 4/8 CAPFG
CTL 4/8 CTL
TO DRUM & HSW TIMING
CLK 1/8 CLK
NSLOW 1/8 NSLOW
RLDR 4/8 RLDR
NX12 4/8 NX12
NLOW 4/8 NLOW
NSTILL 4/8 NSTILL
PREF 4/8 PREF
PCSYNC 4/8 PCSYNC
NX1 4/8 NX1
SLOW3 4/8 SLOW3
SLOW2 4/8 SLOW2
SLOW1 4/8 SLOW1
CAPET+ 6/8 CAP ET+
CAPET- 6/8 CAP ET-
6/8 CAP RCC
CAPP.IN 1/8 CAP P.PWM IN
CAPS.PWM 1/8 CAP S.PWM
HISP 4/8 HISP
REVDLY 4/8 REVDLY
NSERVO 4/8 NSERVO
NRLDRS 4/8 NRLDRS
PCH 4/8 PCH
CAP OVERRIDE
CAP REF
NOT MOUNT
W108 , W113
TP101 , TP106
TP107
= INPUT SIGNAL
= OUTPUT SIGNAL
* = REFER TO THE COMPARISON CHART

REVERSE SIDE **SERVO SCHEMATIC DIAGRAM**

5-2-20

W5 (

W5 (SERVO) SCHEMATIC DIAGRAM 4/8 (I/O, CTL CMP)

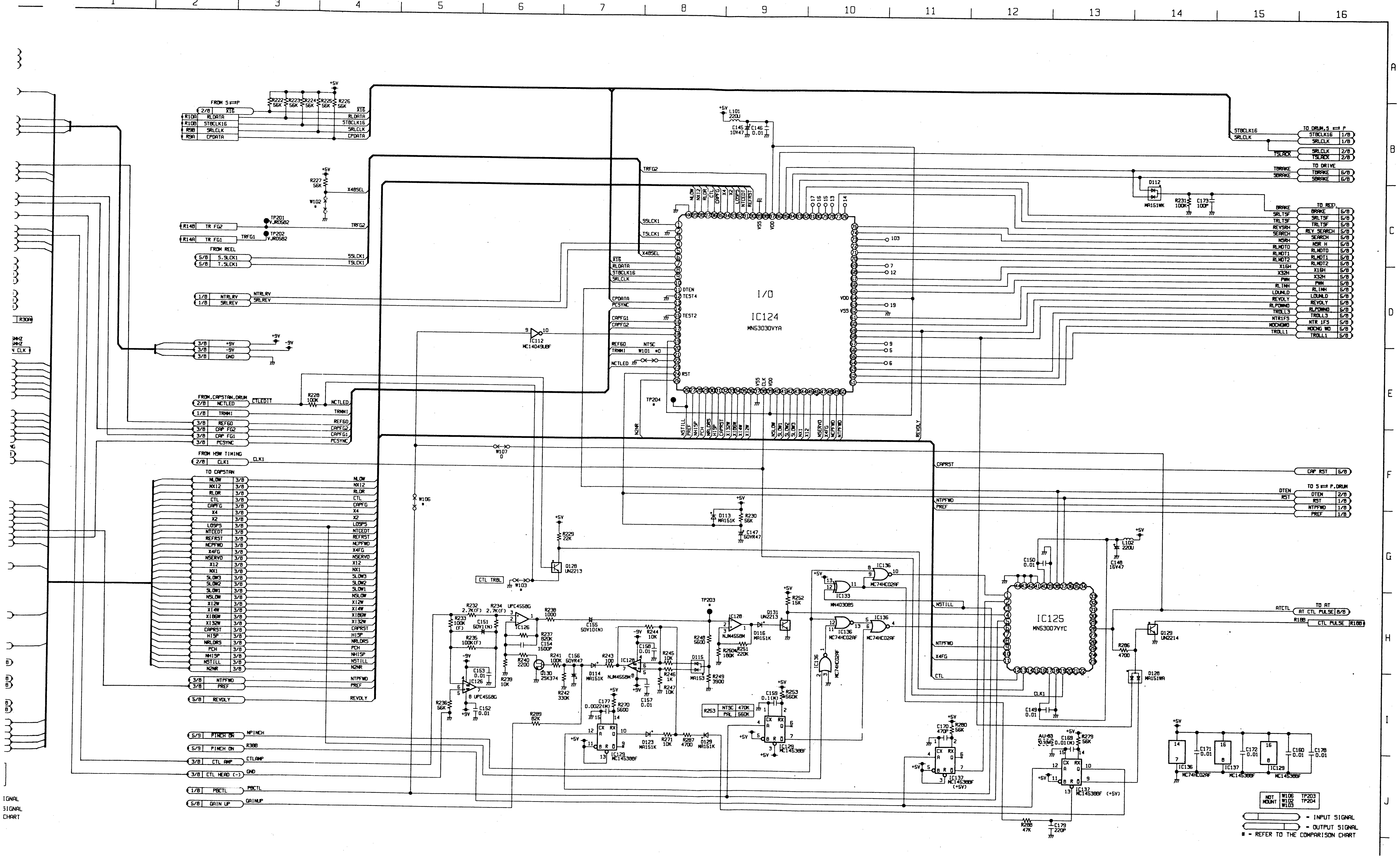

1
2
3
4
5
6
7
8
9
10
11
12
13
14
15
16
A
B
C
D
E
F
G
H
I
J
FROM S⇒P
X16
RLDATA
STBCLK16
SRLCLK
CPDATA
R222 56K
R223 56K
R224 56K
R225 56K
R226 56K
R227 56K
W102
X485EL
TP201
TP202
TR FG2
TR FG1
TRFG1
TRFG2
FROM REEL
S.SLCK1
T.SLCK1
SSLCK1
TSLCK1
NTRLRV
SRLREV
+9V
-9V
GND
FROM.CAPSTAN.DRUM
NCTLED
CTLEDIT
R228 100K
TRMMI
REFGO
CAP FG2
CAP FG1
PCSYNC
FROM HSW TIMING
CLK1
TO CAPSTAN
NLOW
NX12
RLDR
CTL
CAPFG
X4
X2
LOSPS
NTCEDT
REFRST
NCPFWD
X4FG
NSERVO
X12
NX1
SLOW3
SLOW2
SLOW1
NSLOW
X12W
X14W
X18GW
X132W
CAPRST
H15P
NRLDRS
PCH
NH15P
NSTILL
N2NR
NTPFWD
PREF
REVOLY
PINCH ON
CTL AMP
CTL HEAD (-)
PBCTL
GAIN UP
NPINCH
R388
CTLAMP
GND
GAINUP
I/O
IC124
MN53030VYA
DTEN
TEST4
TEST2
RST
VDD
VSS
TP204
IC112
MC14049UBF
W101
W107
W106
W103
NTSC
L101 220U
C145 10V47
C146 0.01
TO DRUM.S ⇒ P
STBCLK16
SRLCLK
TSLACK
TO DRIVE
TBRAKE
SBRAKE
D112 MA151WK
R231 100K
C173 100P
TO REEL
BRAKE
SRLTSF
TRLTSF
REVSRH
SEARCH
NSRH
RLMDTO
RLMDT1
RLMDT2
X16H
X32H
PWM
RLINH
LDUNLD
REVOLY
RLPDWND
TROLL3
NTR1FS
NDCNGWD
TROLL1
CAPRST
CAP RST
TO S ⇒ P.DRUM
DTEN
RST
NTPFWD
PREF
D113 MA151K
R230 56K
C147 50V47
R229 22K
Q128 UN2213
CTL TRBL
L102 220U
C148 16V47
C150 0.01
IC136
IC133
MN4030BS
MC74HC02AF
IC125
MN53007VYC
NSTILL
X4FG
CTL
CLK1
C149 0.01
ATCTL
TO AT
AT CTL PULSE
R188
CTL PULSE
Q129 UN2214
D128 MA151WA
R286 4700
R232 2.7K(F)
R234 2.7K(F)
UPC4558G
R238 1000
R233 100K (F)
C151 50V1(N)
R235 100K(F)
IC126
R237 820K
C154 1500P
C155 50V10(N)
R240 2200
Q130 2SK374
R241 100K
C156 50V47
R242 330K
D114 MA151K
R243 100
IC128
NJM4558M
R244 10K
C158 0.01
R245 10K
R246 1K
R247 10K
D115 MA153
R249 3900
TP203
R248 5600
D116 MA151K
R250 180K
R251 220K
Q131 UN2213
R252 15K
C153 0.01
R236 56K
C152 0.01
R239 10K
R289 82K
C177 0.0022(M)
R270 5600
C157 0.01
IC129 MC14538BF
D123 MA151K
R271 10K
R287 4700
D129 MA151K
R253
NTSC 470K
PAL 560K
C159 0.1(M)
R253 560K
C170 470P
R280 56K
IC137 MC14538BF (+5V)
AU-83
C169 0.01(M)
R279 56K
R288 47K
C179 220P
C171 0.01
C172 0.01
C160 0.01
C178 0.01
MC74HC02AF
MC14538BF
NOT MOUNT
W106 W102 W103
TP203 TP204
= INPUT SIGNAL
= OUTPUT SIGNAL
* = REFER TO THE COMPARISON CHART

MODEL / TYPE	AU-665	AU-65	AU-63	AU-62
NTSC	VEP82061B	VEP82061A	VEP82061D	VEP82061C
PAL	VEP82061G	VEP82061E	VEP82061F	VEP82061E

W5 (SERVO) SCHEMATIC DIAGRAM 5/8 (REEL SERVO)

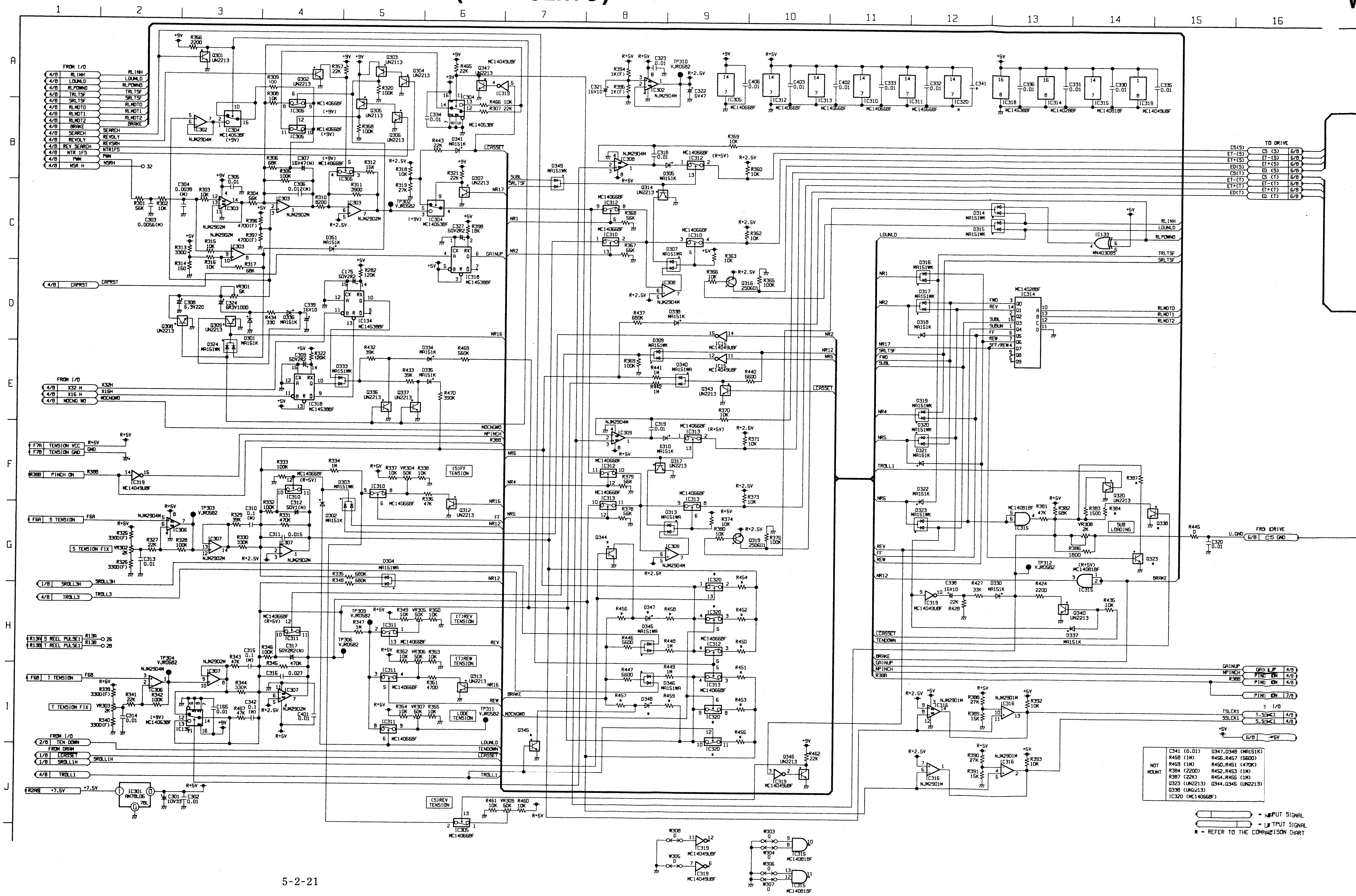
1
2
3
4
5
6
7
8
9
10
11
12
13
14
15
16
A
B
C
D
E
F
G
H
I
J
FROM I/O
4/8 RLINH
4/8 LDUNLD
4/8 RLPDWND
4/8 TRLTSF
4/8 SRLTSF
4/8 RLMDTO
4/8 RLMDT1
4/8 RLMDT2
4/8 BRAKE
4/8 SEARCH
4/8 REVDLY
4/8 REV SEARCH
4/8 NTR 1FS
4/8 PWM
4/8 NSR H
4/8 CAPRST
FROM I/O
4/8 X32 H
4/8 X16 H
4/8 MDCNG MD
F7A TENSION VCC
F7B TENSION GND
R38B PINCH ON
F6A S TENSION
S TENSION FIX
1/8 SROLL3H
4/8 TROLL3
R13A S REEL PULSE1
R13B T REEL PULSE1
F6B T TENSION
T TENSION FIX
FROM I/O
2/8 TEN DOWN
FROM DRAM
1/8 LCASSET
1/8 SROLL1H
4/8 TROLL1
R28B +7.5V
IC301 AN78L06
(5)FF TENSION
(T)REV TENSION
(T)REW TENSION
LODE TENSION
(S)REV TENSION
SUB LOADING
TO DRIVE
CS (S) 6/8
ET-(S) 6/8
ET+(S) 6/8
ED (S) 6/8
CS (T) 6/8
ET-(T) 6/8
ET+(T) 6/8
ED (T) 6/8
FRO DRIVE
6/8 CS GND
GAIN UP 4/8
PINC ON 4/8
PINC ON 4/8
PINC ON 7/8
TO I/O
T.SLCK1 4/8
S.SLCK1 4/8
6/8 +5V
IC314 MC14028BF
IC133 MN4030BS
IC315 MC14081BF
IC316 NJM2901M
IC319 MC14049UBF
IC320 MC14066BF

NOT MOUNT	C341 (0.01) R458 (1M) R459 (1M) R384 (2200) R387 (22K) Q323 (UN2213) Q338 (UN2213) IC320 (MC14066BF)	D347,D348 (MA151K) R456,R457 (5600) R450,R451 (470K) R452,R453 (1M) R454,R455 (1M) Q344,Q345 (UN2213)

= INPUT SIGNAL
= OUTPUT SIGNAL
* = REFER TO THE COMPARISON CHART

W5 (SERVO) SCHEMATIC DIAGRAM 6/8 (SERVO DRIVE)

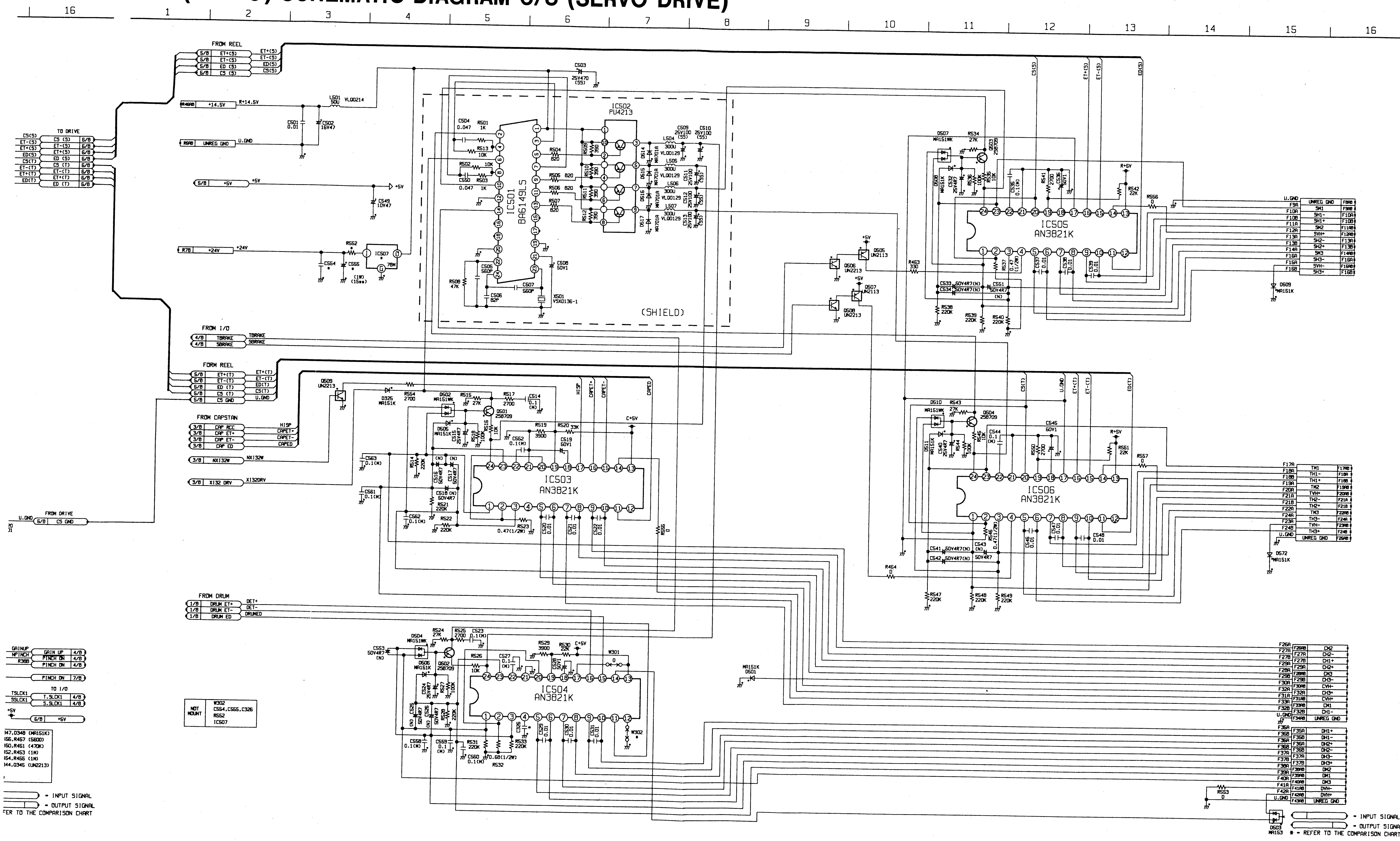
16
1
2
3
4
5
6
7
8
9
10
11
12
13
14
15
16
FROM REEL
ET+(S)
ET-(S)
ED(S)
CS(S)
TO DRIVE
CS (T)
ET-(T)
ET+(T)
ED (T)
R+14.5V
U.GND
UNREG GND
+5V
+24V
L501 50U VL00214
C501 0.01
C502 16V47
C503 25V470 (SS)
C549 10V47
IC501 BA6149LS
IC502 PU4213
IC507 78M
(SHIELD)
X501 VSX0136-1
C504 0.047
R501 1K
R513 10K
R502 10K
R503 1K
C550 0.047
C505 560P
C506 82P
C507 560P
R508 47K
C508 50V1
L504 300U VL00129
L505 300U VL00129
L506 300U VL00129
L507 300U VL00129
C509 25V100 (SS)
C510 25V100 (SS)
D514
D515
D516
D517
MA701A
FROM I/O
TBRAKE
SBRAKE
FORM REEL
CS GND
FROM CAPSTAN
HISP
CAP RCC
CAPET+
CAPET-
CAPED
NX132W
X132 DRV
FROM DRIVE
IC503 AN3821K
IC504 AN3821K
IC505 AN3821K
IC506 AN3821K
D509 UN2213
D325 MA151K
R564 2700
D502 MA151WK
R515 27K
R517 2700
C514 0.1 (M)
D501 2SB709
R519 3900
R520 33K
C519 50V1
C+5V
C552 0.1(M)
C563 0.1(M)
C561 0.1(M)
C562 0.1(M)
R521 220K
R522 220K
R523 0.47(1/2W)
C520 0.01
C521 0.01
C522 0.01
R555 0
D505 UN2113
D506 UN2213
D507 UN2113
D508 UN2213
R463 330
R464 0
D507 MA151WK
R534 27K
D503 2SB709
R+5V
R542 22K
R556 0
C533 50V4R7(N)
C534 50V4R7(N)
C551 50V4R7
R538 220K
R539 220K
R540 220K
D509 MA151K
D510 MA151WK
R543 27K
D504 2SB709
C545 50V1
C544 0.1 (M)
R561 22K
R557 0
C541 50V4R7(N)
C542 50V4R7(N)
C543 50V4R7
C548 0.01
R547 220K
R548 220K
R549 220K
D572 MA151K
FROM DRUM
DET+
DET-
DRUMED
DRUM ET+
DRUM ET-
DRUM ED
D504 MA151WK
R524 27K
R525 2700
C523 0.1(M)
C553 50V4R7 (N)
D506 MA151K
D502 2SB709
R526 10K
C527 0.1 (M)
R529 3900
R530 22K
W301 0
W302 0
C558 0.1(M)
C559 0.1 (M)
R531 220K
R533 220K
C560 0.1(M)
R532 0.68(1/2W)
C529 0.01
C530 0.01
C531 0.01
MA151K D501
R553 0
D503 MA153
GAINUP
NPINCH
R388
GAIN UP
PINCH ON
TO I/O
TSLCK1
SSLCK1
T.SLCK1
S.SLCK1
NOT MOUNT
W302
C554,C555,C326
R552
IC507
47,D348 (MA151K)
I56,R467 (5600)
I50,R461 (470K)
I52,R453 (1M)
I54,R455 (1M)
344,D345 (UN2213)
- INPUT SIGNAL
- OUTPUT SIGNAL
ER TO THE COMPARISON CHART
* - REFER TO THE COMPARISON CHART
UNREG GND
SH1
SH1-
SH1+
SH2
SVH+
SH2-
SH2+
SH3
SH3-
SVH-
SH3+
TH1
TH1-
TH1+
TH2
TVH+
TH2-
TH2+
TH3
TH3-
TVH-
TH3+
CH2
CH2-
CH1+
CH2+
CH3
CH3-
CH3+
CVH+
CH1
CH1-
DH1+
DH1-
DH2+
DH2-
DH3+
DH2
DH1
DH3
DVH-
DVH+

MODEL / TYPE	AU-665	AU-65	AU-63	AU-62
NTSC	VEP82061B	AT is not	VEP82061D	AT is not
PAL	VEP82061G	Provided	VEP82061F	Provided

W5 (SERVO) SCHEMATIC DIAGRAM 7/8 (AUTO TRACKING1)[FOR AU-665,AU-63]

W5 (S

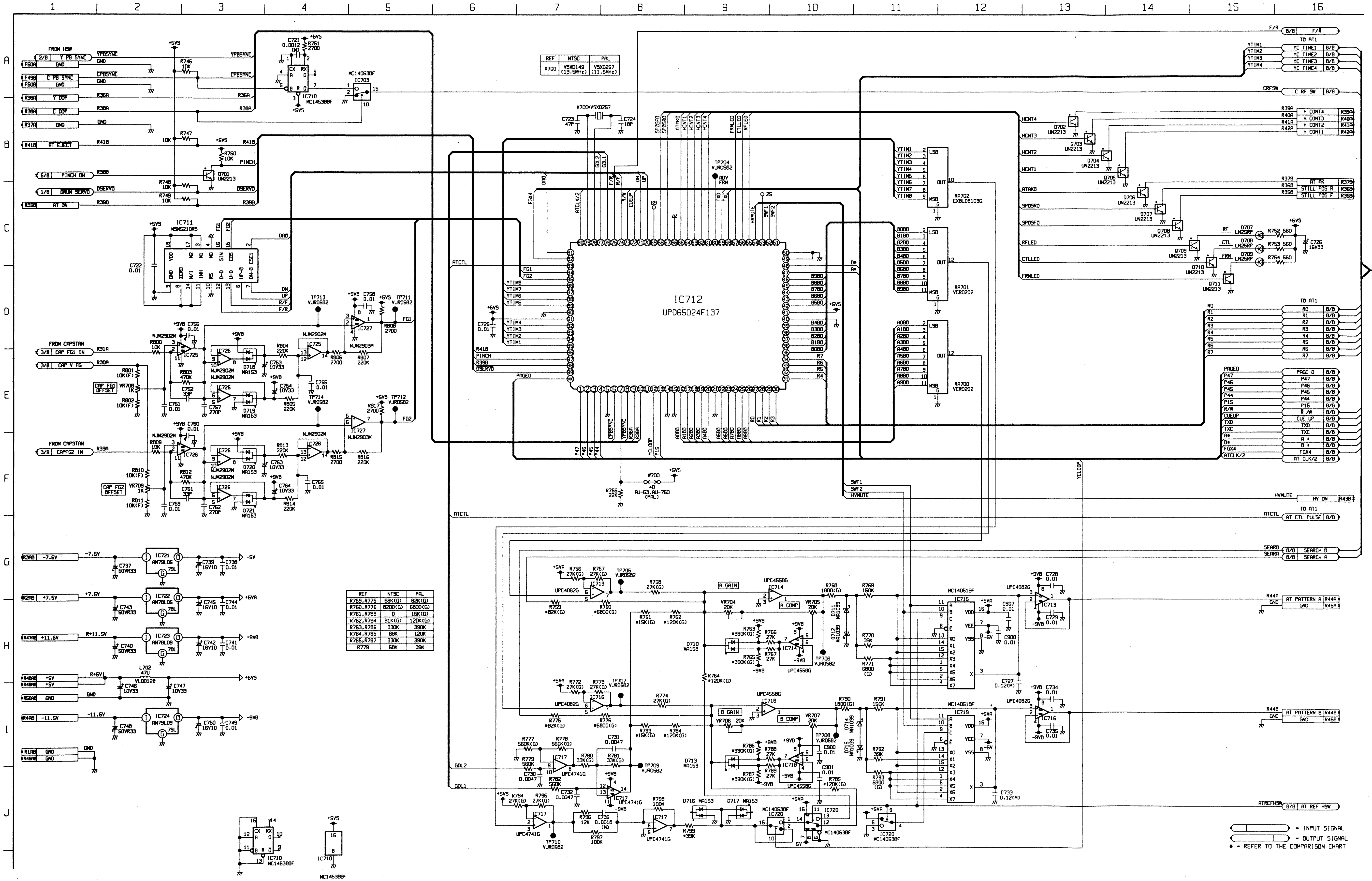
1
2
3
4
5
6
7
8
9
10
11
12
13
14
15
16
A
B
C
D
E
F
G
H
I
J
IC712
UPD65024F137
IC711
MSM6210RS
IC703
MC14538BF
IC710
MC14538BF
IC715
MC14051BF
IC719
MC14051BF
IC720
MC14053BF
IC721
AN79L05
IC722
AN78L05
IC723
AN78L09
IC724
AN79L09
RA702
EXBL08103G
RA701
VCR0202
RA700
VCR0202
X700*VSX0257
FROM HSW
FROM CAPSTAN
TO AT1
F/R
YC TIME1
YC TIME2
YC TIME3
YC TIME4
C RF SW
H CONT4
H CONT3
H CONT2
H CONT1
AT AK
STILL POS R
STILL POS F
HV ON
AT CTL PULSE
SEARCH B
SEARCH A
AT PATTERN A
AT PATTERN B
AT REF HSW
A GAIN
A COMP
B GAIN
B COMP
CAP FG1 OFFSET
CAP FG2 OFFSET
W700
AU-63,AU-760 (PAL)
= INPUT SIGNAL
= OUTPUT SIGNAL
* = REFER TO THE COMPARISON CHART

REF	NTSC	PAL
X700	VSX0149 (13.5MHz)	VSX0257 (11.5MHz)

REF	NTSC	PAL
R759,R775	68K(G)	82K(G)
R760,R776	8200(G)	6800(G)
R761,R783	0	15K(G)
R762,R784	91K(G)	120K(G)
R763,R786	330K	390K
R764,R785	68K	120K
R765,R787	330K	390K
R779	68K	39K

REVERSE SIDE SERVO SCHEMATIC DIAGRAM

W5 (SERVO) SCHEMATIC DIAGRAM 8/8 (AUTO TRACKING 2)[FOR AU-665,AU-65]

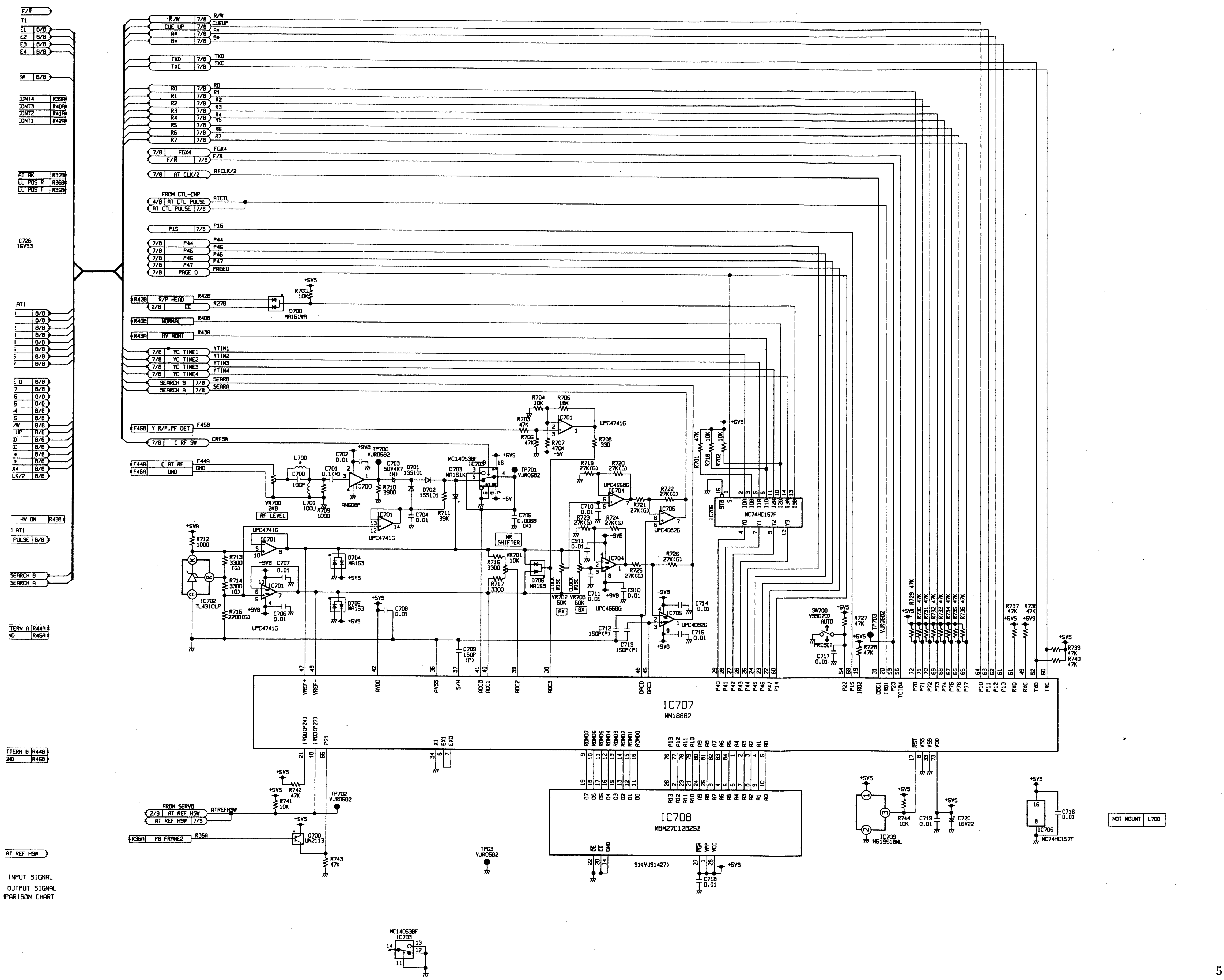

IC707
MN18882
IC708
MBM27C12825Z
IC700
AN608P
IC701
UPC4741G
IC702
TL431CLP
IC703
MC14053BF
IC704
UPC4558G
IC705
UPC4082G
IC706
MC74HC157F
IC709
MS1961BML
VR700 2K8
RF LEVEL
MR SHIFTER
VR702 50K
VR703 50K
RX
BX
SW700 VSS0207 AUTO PRESET
TP700 VJR0582
TP701 VJR0582
TP702 VJR0582
TP703 VJR0582
D700 MA151WA
D701 1SS101
D702 1SS101
D703 MA151K
D704 MA153
D705 MA153
D706 MA153
D707 UN2113
L700
L701 100U
+5VS
+9VB
-9VB
FROM CTL-CMP
FROM SERVO
R/W
CUE UP
TXD
TXC
FGX4
F/R
AT CLK/2
AT CTL PULSE
P15
P44
P45
P46
P47
PAGE 0
R/P HEAD
EE
NORMAL
HV MONI
YC TIME1
YC TIME2
YC TIME3
YC TIME4
SEARCH B
SEARCH A
Y R/P,PF DET
C RF SW
C AT RF
GND
AT REF HSW
PB FRAME2
51(VJS1427)
NOT MOUNT L700
INPUT SIGNAL
OUTPUT SIGNAL
PARISON CHART

FRONT
SERVO & DRIVE & AT

		A	No	B		
1/8	GND	GND	1	←	GND	1/8
1/8	+5VI	+5V	2	←	+5VI	1/8
1/8	+5VI	+5V	3	←	+5VI	1/8
3/8	+11.5V	+11.5V	4	←	+11.5V	3/8
3/8	+11.5V	+11.5V	5	←	+11.5V	3/8
5/8	F6A	S TENSION	6	T TENSION	F6B	5/8
5/8	R+5V	TENSION VCC	7	TENSION GND	GND	5/8
6/8	U.GND	UNREG GND	8	←	U.GND	6/8
6/8	F9A	SM1	9	←	F9A	6/8
6/8	F10A	SH1-	10	SH1+	F10B	6/8
6/8	F11A	SM2	11	←	F11A	6/8
6/8	F12A	SVH+	12	←	F12A	6/8
6/8	F13A	SH2-	13	SH2+	F13B	6/8
6/8	F14A	SM3	14	←	F14A	6/8
6/8	F15A	SVH-	15	←	F15A	6/8
6/8	F16A	SH3-	16	SH3+	F16B	6/8
6/8	F17A	TM1	17	←	F17A	6/8
6/8	F18A	TH1-	18	TH1+	F18B	6/8
6/8	F19A	TM2	19	←	F19A	6/8
6/8	F20A	TVH+	20	←	F20A	6/8
6/8	F21A	TH2-	21	TH2+	F21B	6/8
6/8	F22A	TM3	22	←	F22A	6/8
6/8	F23A	TVH-	23	←	F23A	6/8
6/8	F24A	TH3-	24	TH3+	F24B	6/8
6/8	U.GND	UNREG GND	25	←	U.GND	6/8
6/8	F26A	CM2	26	←	F26A	6/8
6/8	F27A	CH2-	27	CH1+	F27B	6/8
6/8	F28A	CM3	28	←	F28A	6/8
6/8	F29A	CH2+	29	CH3-	F29B	6/8
6/8	F30A	CVH-	30	←	F30A	6/8
6/8	F31A	CVH+	31	←	F31A	6/8
6/8	F32A	CH3+	32	CH1-	F32B	6/8
6/8	F33A	CM1	33	←	F33A	6/8
6/8	U.GND	UNREG GND	34	←	U.GND	6/8
6/8	F36A	DH1+	35	DH1-	F36B	6/8
6/8	F36A	DH2+	36	DH2-	F36B	6/8
6/8	F37A	DH3-	37	DH3+	F37B	6/8
6/8	F38A	DM2	38	←	F38A	6/8
6/8	F39A	DM1	39	←	F39A	6/8
6/8	F40A	DM3	40	←	F40A	6/8
6/8	F41A	DVH-	41	←	F41A	6/8
6/8	F42A	DVH+	42	←	F42A	6/8
6/8	U.GND	UNREG GND	43	←	U.GND	6/8
8/8	F44A	C AT RF	44	Y R/P PB SYNC	F44B	1/8
8/8	GND	GND	45	Y R/P . RF DET	F45B	8/8
2/8	F46A	Y HEAD SW	46	Y AT HSW	F46B	2/8
2/8	F47A	Y R/P HSW	47	C HEAD SW	F47B	2/8
2/8	F48A	C AT HSW	48	C R/P HSW	F48B	2/8
2,7/8	YPBSYNC	Y PB SYNC	49	C PB SYNC	CPBSYNC	7/8
1,2,7/8	GND	GND	50	←	GND	1,2,7/8

REAR
SERVO & DRIVE & AT

		A	No	B		
7/8	GND	GND	1	←	GND	7/8
1,6,7/8	+7.5V	+7.5V	2	←	+7.5V	1,6,7/8
7/8	-7.5V	-7.5V	3	←	-7.5V	7/8
3,7/8	-11.5V	-11.5V	4	←	-11.5V	3,7/8
3/8	*	-14.5V	5	←	*	
6/8	U.GND	UNREG GND	6	←	U.GND	6/8
1/8	R7A	S FRAMING	7	+24V	+24V	6/8
3/8	R8A	CAP MAIN CLK	8	CAP OSC	R8B	3/8
4/8	CPDATA	CPDATA	9	SRLCLK	SRLCLK	4/8
4/8	RLDATA	RLDATA	10	STBCLK16	STBCLK16	4/8
1/8	SRLDTCYL	SERIAL DATA DRM	11	STRB CLK8	R11B	2/8
2/8	R12A	SERIAL DATA TIM	12	SERIAL DATA SRV	R12B	2/8
5/8	R13A	S REEL PULSE1	13	T REEL PULSE1	R13B	5/8
4/8	TRFG1	TR FG1	14	TR FG2	TRFG2	4/8
1/8	R16A	REF CF	15	FRAMING	R16B	1/8
1/8	R16A	FRAMING /2	16	FRAMING /4	R16B	1/8
1/8	R17A	TRAKING +	17	CAP FWD	NTPFWD	1/8
1/8	R18A	TRAKING -	18	CTL PULSE	R18B	4/8
2/8	R19A	RE START	19	REC RELAY	R19B	2/8
2/8	R20A	RE CH1 SW	20	RE CH2 SW	R20B	2/8
2/8	R21A	Y CH1 REC SW	21	C CH1 REC SW	R21B	2/8
2/8	R22A	Y CH2 REC SW	22	C CH2 REC SW	R22B	2/8
2/8	R23A	(Y CH1 PCM GATE)	23	(C CH1 PCM GATE)	R23B	2/8
2/8	R24A	(Y CH2 PCM GATE)	24	(C CH2 PCM GATE)	R24B	2/8
2/8	R25A	(DUB Y DOP)	25	(PCM HSW)	R25B	2/8
2/8	R26A	(DUB C DOP)	26	(PCM GATE)	R26B	2/8
2/8	R27A	ADD	27	EE	R27B	2/8
3/8	R28A	CAP OVERRIDE	28	DRUM FG	R28B	1/8
3/8	GND	GND	29	GND	GND	1/8
3/8	R30A	CAP V FG	30	DRUM PG+	R30B	1/8
3/8	R31A	CAP FG1 IN	31	DRUM PG-	R31B	1/8
3/8	GND	GND	32	CTL GND	GND	3/8
3/8	R33A	CAP FG2 IN	33	CTL HEAD	R33B	3/8
3/8	GND	GND	34	CTL GND	GND	3/8
8/8	R35A	PB FRAME2	35	(STILL POS F)	R35B	7/8
7/8	R36A	Y DOP	36	(STILL POS R)	R36B	7/8
7/8	GND	GND	37	(AT AK)	R37B	7/8
7/8	R38A	C DOP	38	PINCH ON	R38B	5/8
7/8	R39A	H CONT4	39	(AT ON)	R39B	7/8
7/8	R40A	H CONT3	40	(NORMAL)	R40B	8/8
7/8	R41A	H CONT2	41	(AT EJECT)	R41B	7/8
7/8	R42A	H CONT1	42	R/P HEAD	R42B	8/8
8/8	R43A	(HV MONI)	43	(HV ON)	HVMUTE	7/8
7/8	R44A	(AT PATTERN A)	44	(AT PATTERN B)	R44B	7/8
1,7/8	GND	GND	45	←	GND	1,7/8
6/8	R+14.5V	+14.5V	46	←	R+14.5V	6/8
7/8	R+11.5V	+11.5V	47	←	R+11.5V	7/8
7/8	R+5VI	+5V	48	←	R+5VI	7/8
7/8	R+5VI	+5V	49	←	R+5VI	7/8
1,7/8	GND	GND	50	←	GND	1,7/8

= INPUT SIGNAL
= OUTPUT SIGNAL
* = REFER TO THE COMPARISON CHART

W6 (AUDIO) SCHEMATIC DIAGRAM 1/5 (LINEAR AUDIO)

TYPE \ MODEL	AU-665	AU-65	AU-63	AU-62
NTSC	VEP84095B	VEP84095A	VEP84095C	VEP84095C
PAL	VEP84095F	VEP84095D	VEP84095E	VEP84095E

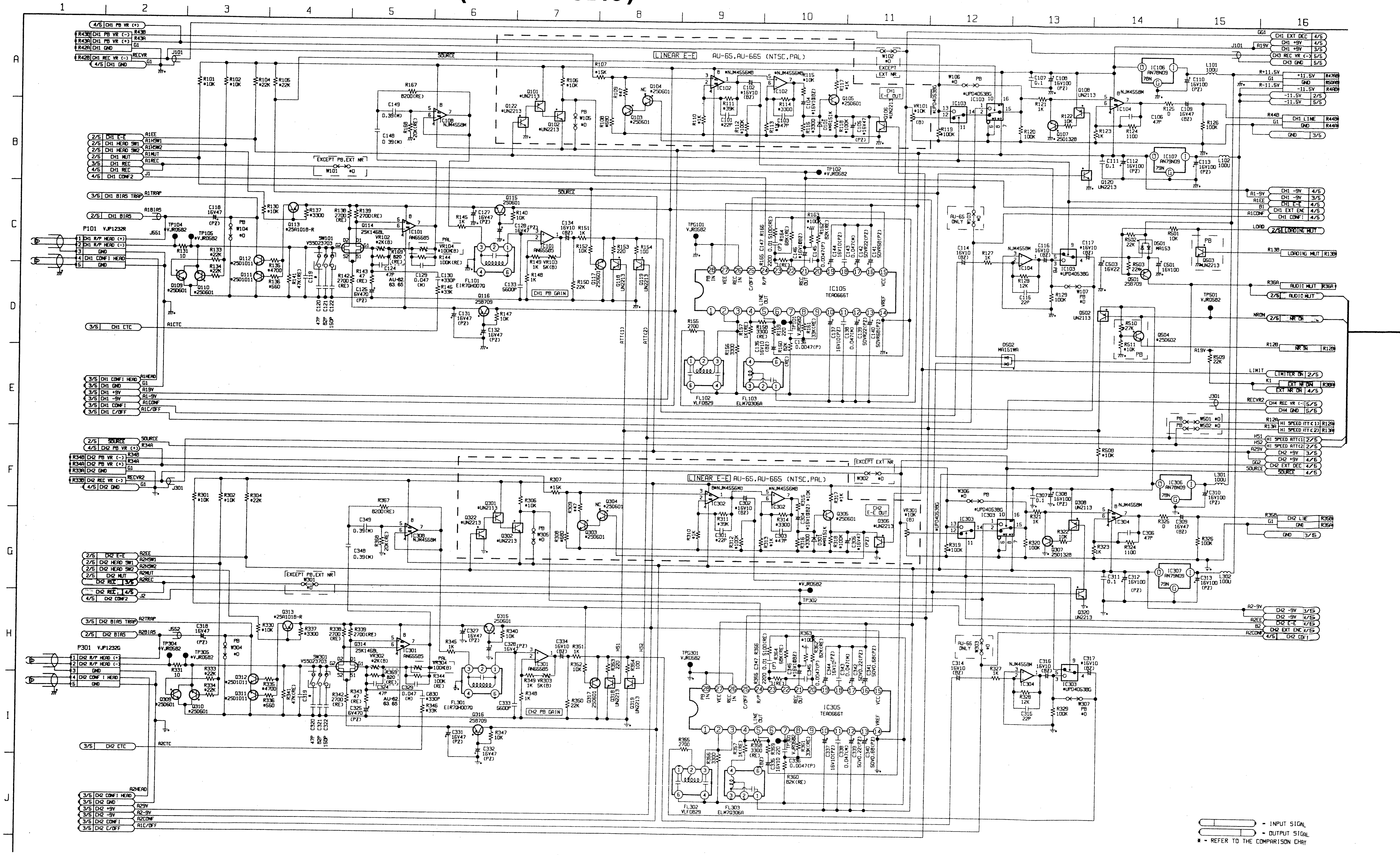
1
2
3
4
5
6
7
8
9
10
11
12
13
14
15
16
A
B
C
D
E
F
G
H
I
J
LINEAR E-E AU-65,AU-665 (NTSC,PAL)
EXCEPT PB,EXT NR
EXCEPT EXT NR
AU-65 ONLY
SOURCE
P101 VJP1232R
P301 VJP1232G
IC101 AN6558S
IC102 NJM4556MB
IC103 uPD4053BG
IC104 NJM4558M
IC105 TEA0666T
IC106 AN78N09
IC107 AN79N09
IC108 NJM4558M
IC301 AN6558S
IC302 NJM4556MB
IC303 uPD4053BG
IC304 NJM4558M
IC305 TEA0666T
IC306 AN78N09
IC307 AN79N09
IC308 NJM4558M
FL101 EIR70H007Q
FL102 VLF0829
FL103 ELM70306A
FL301 EIR70H007Q
FL302 VLF0829
FL303 ELM70306A
CH1 PB GAIN
CH2 PB GAIN
CH1 E-E
CH2 E-E
LOADING MUT
AUDIO MUT
LIMITER ON
EXT NR ON
HI SPEED ATT

= INPUT SIGNAL
= OUTPUT SIGNAL
* - REFER TO THE COMPARISON CHART

W6 (AUDIO) SCHEMATIC DIAGRAM 2/5 (REC, TC)

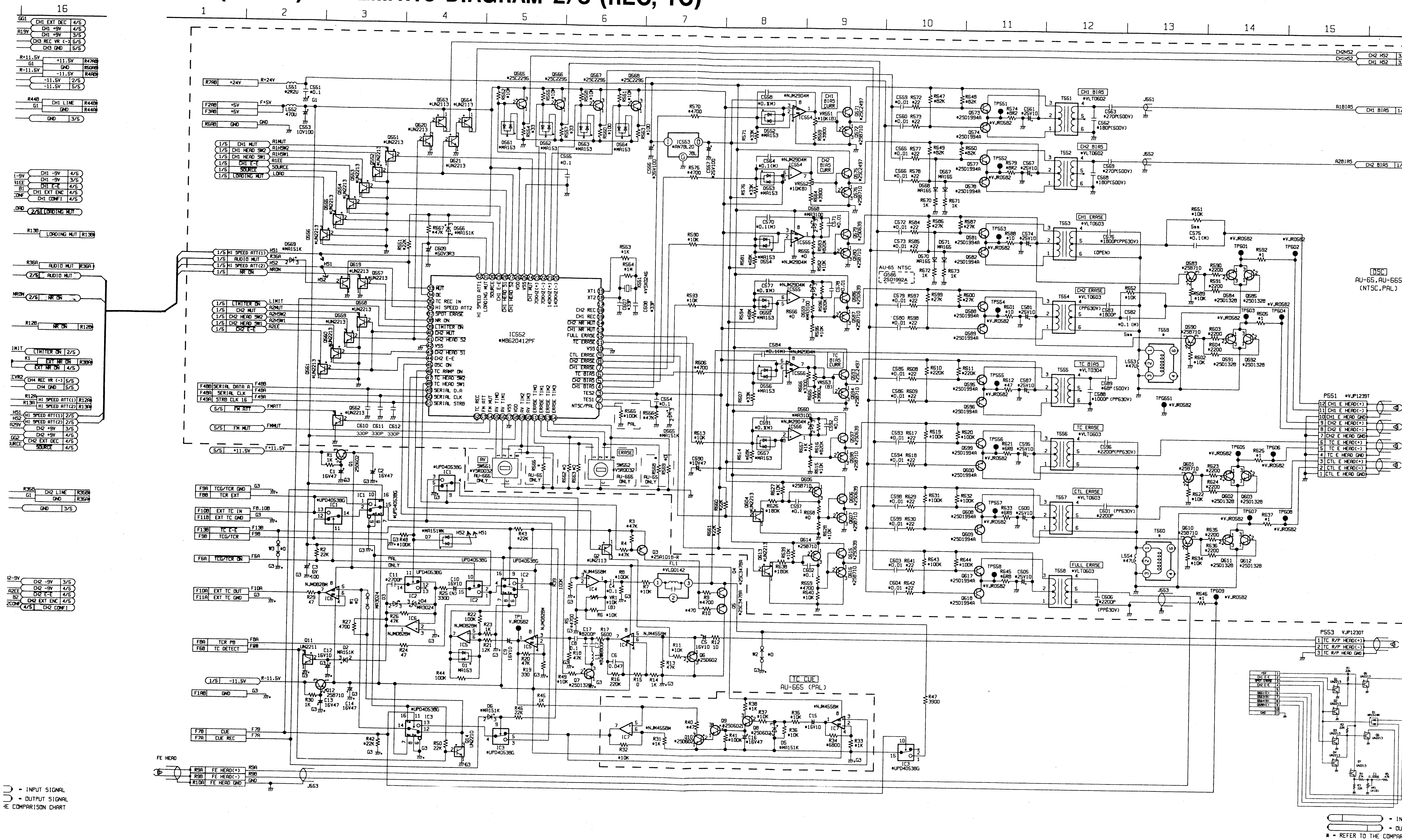
16
1
2
3
4
5
6
7
8
9
10
11
12
13
14
15
IC552
MB620412PF
IC553
AN78L20
CH1 BIAS
CH2 BIAS
CH1 ERASE
CH2 ERASE
TC BIAS
TC ERASE
CTL ERASE
FULL ERASE
CH1 BIAS CURR
CH2 BIAS CURR
TC BIAS CURR
TS551 VLT0602
TS552 VLT0602
TS553 VLT0603
TS554 VLT0603
TS555 VLT0304
TS556 VLT0603
TS557 VLT0603
TS558 VLT0603
OSC
AU-65, AU-665 (NTSC, PAL)
AU-65 NTSC
Q566 2SD1992A
PS551 VJP1239T
PS553 VJP1230T
CH1 E HEAD(+)
CH1 E HEAD(-)
CH1 E HEAD GND
CH2 E HEAD(+)
CH2 E HEAD(-)
CH2 E HEAD GND
TC E HEAD(+)
TC E HEAD(-)
TC E HEAD GND
CTL E HEAD(+)
CTL E HEAD(-)
CTL E HEAD GND
TC R/P HEAD(+)
TC R/P HEAD(-)
TC R/P HEAD GND
FE HEAD
FE HEAD(+)
FE HEAD(-)
FE HEAD GND
TC CUE
AU-665 (PAL)
RV
SW551 VSR0032
AU-665 ONLY
ERASE
SW552 VSR0032
AU-65 ONLY
FL1 VLQ0142
HI SPEED ATT(1)
AUDIO MUT
HI SPEED ATT(2)
NR ON
LIMITER ON
CH2 MUT
CH2 HEAD SW2
CH2 HEAD SW1
CH2 E-E
CH1 MUT
CH1 HEAD SW2
CH1 HEAD SW1
CH1 E-E
SOURCE
LOADING MUT
SERIAL DATA A
SERIAL CLK
STRB CLK 16
FM ATT
FM MUT
TCG/TCR GND
TCR EXT
EXT TC IN
EXT TC GND
TC E-E
TCG/TCR
TCG/TCR ON
EXT TC OUT
TC DETECT
CUE
CUE REC
⊃ = INPUT SIGNAL
⊃ = OUTPUT SIGNAL
HE COMPARISON CHART
= IN
= OU
* = REFER TO THE COMPAR

MODEL / TYPE	AU-665	AU-65	AU-63	AU-62
NTSC	VEP84095B	VEP84095A	VEP84095C	VEP84095C
PAL	VEP84095F	VEP84095D	VEP84095E	VEP84095E

W6 (AUDIO) SCHEMATIC DIAGRAM 3/5 (CONFI)

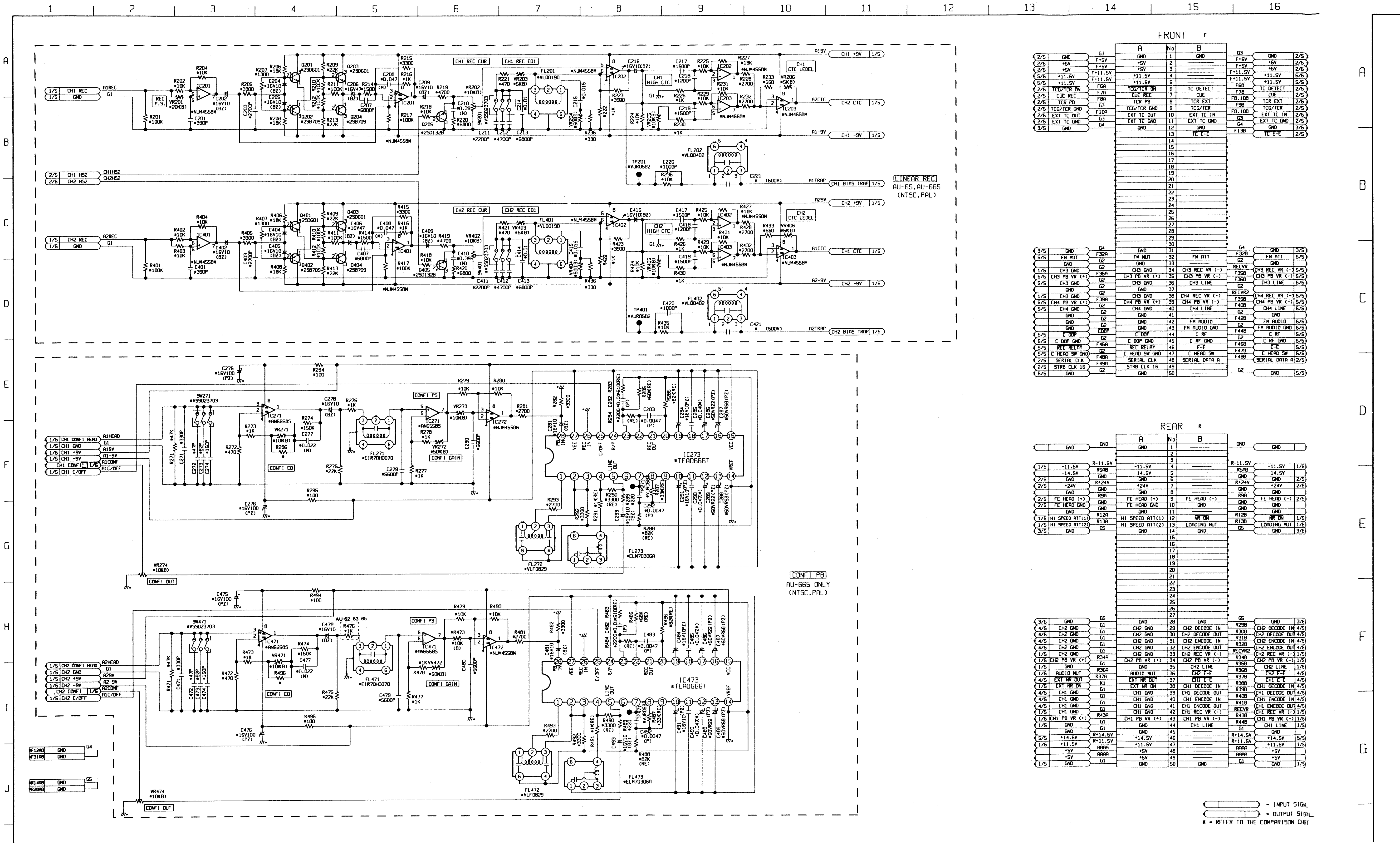
CH1 REC CUR
CH1 REC EQ1
CH2 REC CUR
CH2 REC EQ1
CH1 CTC LEDEL
CH2 CTC LEDEL
CH1 HIGH CTC
CH2 HIGH CTC
LINEAR REC
AU-65, AU-665 (NTSC, PAL)
CH1 +9V
CH2 CTC
CH1 -9V
CH1 BIAS TRAP
CH2 +9V
CH1 CTC
CH2 -9V
CH2 BIAS TRAP
CH1 REC
CH2 REC
CH1 HS2
CH2 HS2
CONFI EQ
CONFI PS
CONFI GAIN
CONFI OUT
IC273 TEA0666T
IC473 TEA0666T
CONFI PB
AU-665 ONLY (NTSC, PAL)
CH1 CONFI HEAD
CH2 CONFI HEAD
CH1 C/OFF
CH2 C/OFF
FRONT
REAR
- INPUT SIGNAL
- OUTPUT SIGNAL
* = REFER TO THE COMPARISON CHART

W6 (AUDIO) SCHEMATIC DIAGRAM 4/5 (EXT NR) [FOR AU-665 PAL]

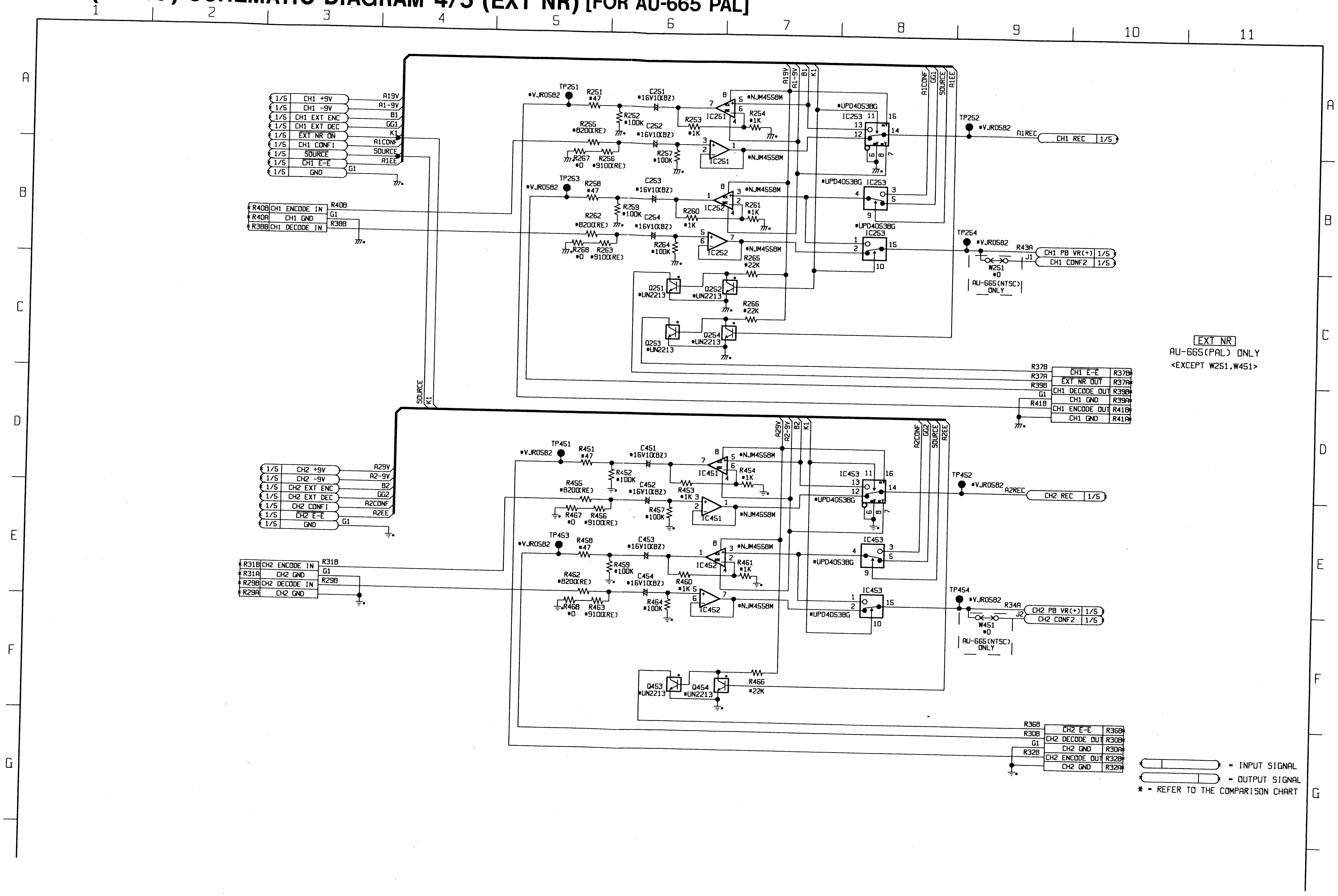
1
2
3
4
5
6
7
8
9
10
11
A
B
C
D
E
F
G
1/5 CH1 +9V A19V
1/5 CH1 -9V A1-9V
1/5 CH1 EXT ENC B1
1/5 CH1 EXT DEC GG1
1/5 EXT NR ON K1
1/5 CH1 CONF1 A1CONF
1/5 SOURCE SOURCE
1/5 CH1 E-E A1EE
1/5 GND G1
R40B CH1 ENCODE IN R40B
R40A CH1 GND G1
R38B CH1 DECODE IN R38B
TP251 *VJR0582
R251 *47
C251 *16V1(BZ)
R252 *100K
R253 *1K
R254 *1K
R255 *820(RE)
C252 *16V1(BZ)
R257 *100K
R267 *0
R256 *9100(RE)
IC251 *NJM4558M
*UPD4053BG IC253
TP252 *VJR0582
A1REC
CH1 REC 1/5
TP253 *VJR0582
R258 *47
C253 *16V1(BZ)
R259 *100K
R260 *1K
R261 *1K
R262 *820(RE)
C254 *16V1(BZ)
R264 *100K
R268 *0
R263 *9100(RE)
IC252 *NJM4558M
R265 *22K
TP254 *VJR0582
R43A
J1
W251 *0
CH1 PB VR(+) 1/5
CH1 CONF2 1/5
AU-665(NTSC) ONLY
Q251 *UN2213
Q252 *UN2213
R266 *22K
Q253 *UN2213
Q254 *UN2213
SOURCE
K1
A1CONF
GG1
SOURCE
A1EE
R37B CH1 E-E R37B
R37A EXT NR OUT R37A
R39B CH1 DECODE OUT R39B
G1 CH1 GND R39A
R41B CH1 ENCODE OUT R41B
CH1 GND R41A
1/5 CH2 +9V A29V
1/5 CH2 -9V A2-9V
1/5 CH2 EXT ENC B2
1/5 CH2 EXT DEC GG2
1/5 CH2 CONF1 A2CONF
1/5 CH2 E-E A2EE
1/5 GND G1
R31B CH2 ENCODE IN R31B
R31A CH2 GND G1
R29B CH2 DECODE IN R29B
R29A CH2 GND
TP451 *VJR0582
R451 *47
C451 *16V1(BZ)
R452 *100K
R453 *1K
R454 *1K
R455 *820(RE)
C452 *16V1(BZ)
R457 *100K
R467 *0
R456 *9100(RE)
IC451 *NJM4558M
IC453 *UPD4053BG
TP452 *VJR0582
A2REC
CH2 REC 1/5
TP453 *VJR0582
R458 *47
C453 *16V1(BZ)
R459 *100K
R460 *1K
R461 *1K
R462 *820(RE)
C454 *16V1(BZ)
R464 *100K
R468 *0
R463 *9100(RE)
IC452 *NJM4558M
TP454 *VJR0582
R34A
J2
W451 *0
CH2 PB VR(+) 1/5
CH2 CONF2 1/5
AU-665(NTSC) ONLY
Q453 *UN2213
Q454 *UN2213
R466 *22K
A2CONF
GG2
SOURCE
A2EE
R36B CH2 E-E R36B
R30B CH2 DECODE OUT R30B
G1 CH2 GND R30A
R32B CH2 ENCODE OUT R32B
CH2 GND R32A

EXT NR
AU-665(PAL) ONLY
<EXCEPT W251,W451>

= INPUT SIGNAL
= OUTPUT SIGNAL
* - REFER TO THE COMPARISON CHART

MODEL / TYPE	AU-665	AU-65	AU-63	AU-62
NTSC	VEP84095B	VEP84095A	VEP84095C	VEP84095C
PAL	VEP84095F	VEP84095D	VEP84095E	VEP84095E

W6 (AUDIO) SCHEMATIC DIAGRAM 5/5 (FM AUDIO)

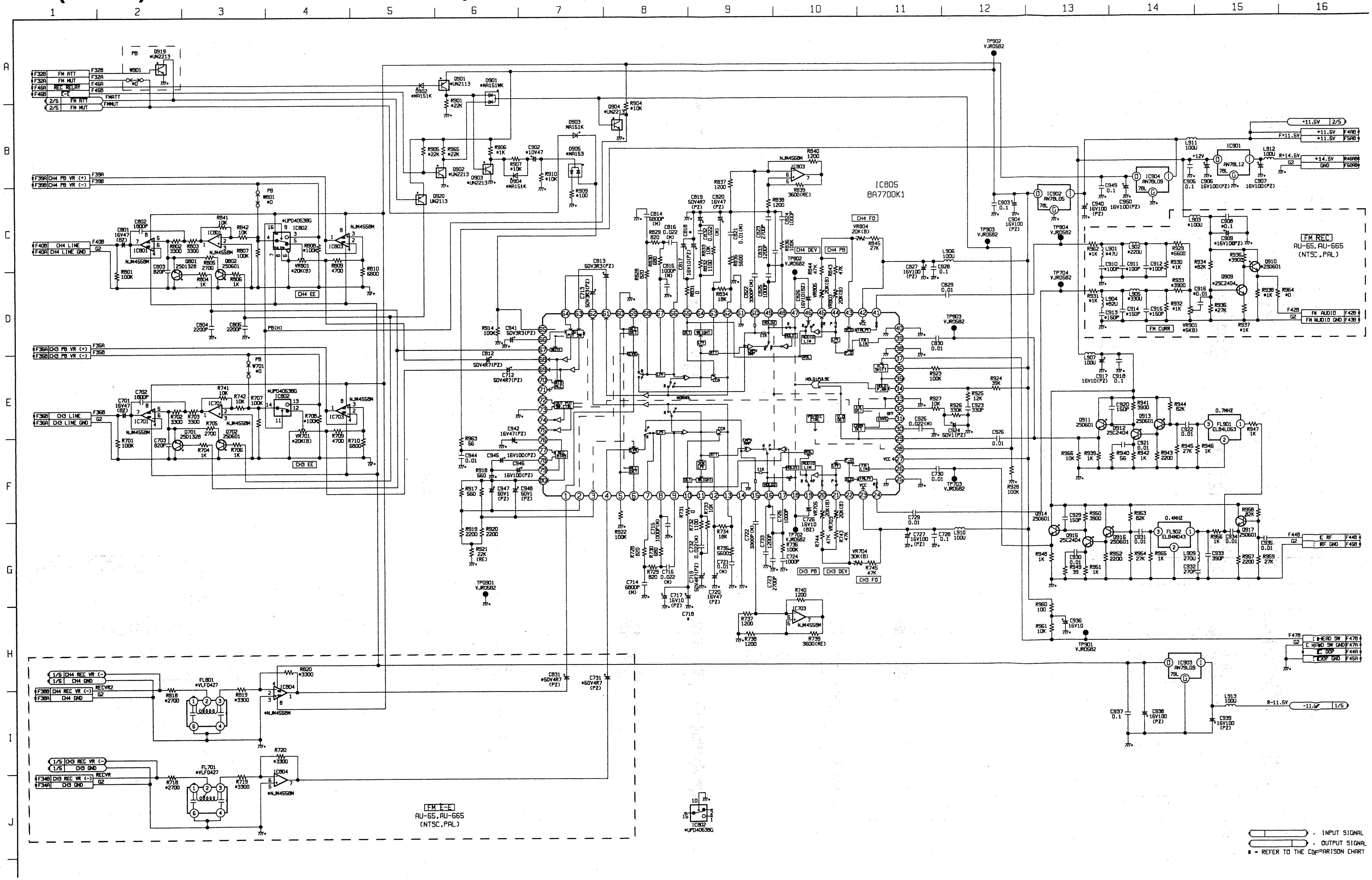
1
2
3
4
5
6
7
8
9
10
11
12
13
14
15
16
A
B
C
D
E
F
G
H
I
J
IC805
BA7700K1
FM REC
AU-65, AU-665
(NTSC, PAL)
FM E-E
AU-65, AU-665
(NTSC, PAL)
CH4 LINE
CH4 LINE GND
CH3 LINE
CH3 LINE GND
CH4 PB VR (+)
CH4 PB VR (-)
CH3 PB VR (+)
CH3 PB VR (-)
FM ATT
FM MUT
REC RELAY
E-E
CH4 REC VR (-)
CH4 GND
CH3 REC VR (-)
CH3 GND
FM AUDIO
FM AUDIO GND
E RF
RF GND
HEAD SW
HEAD SW GND
DOP
DOP GND
+11.5V
+14.5V
GND
-11.5V
IC901 AN78L12
IC902 AN78L05
IC903 AN79L09
IC904 AN78L09
IC801 NJM4558M
IC802 *UPD4053BG
IC803 NJM4558M
IC701 NJM4558M
IC702 *UPD4053BG
IC703 NJM4558M
IC804 *NJM4558M
FL801 *VLF0427
FL701 *VLF0427
FL901 ELB4L053
FL902 ELB4N043
0.7MHZ
0.4MHZ
TP901 VJR0582
TP902 VJR0582
TP903 VJR0582
TP904 VJR0582
TP704 VJR0582
TP801 VJR0582
TP803 VJR0582
TP702 VJR0582
TP703 VJR0582
TPD901 VJR0582
CH4 FO
CH4 DEV
CH4 PB
CH4 EE
CH3 EE
CH3 PB
CH3 DEV
CH3 FO
FM CURR
INPUT SIGNAL
OUTPUT SIGNAL
* = REFER TO THE COMPARISON CHART

B. MOTHER
SCHEMATIC DIAGRAM

MODEL / TYPE	AU-665	AU-65	AU-63	AU-62
NTSC	VEP80549B	VEP80549A	VEP80549B	VEP80549A
PAL	VEP80549C	VEP80549A	VEP80549B	VEP80549A

B0 (B,MOTHER) SCHEMATIC DIAGRAM 1/2

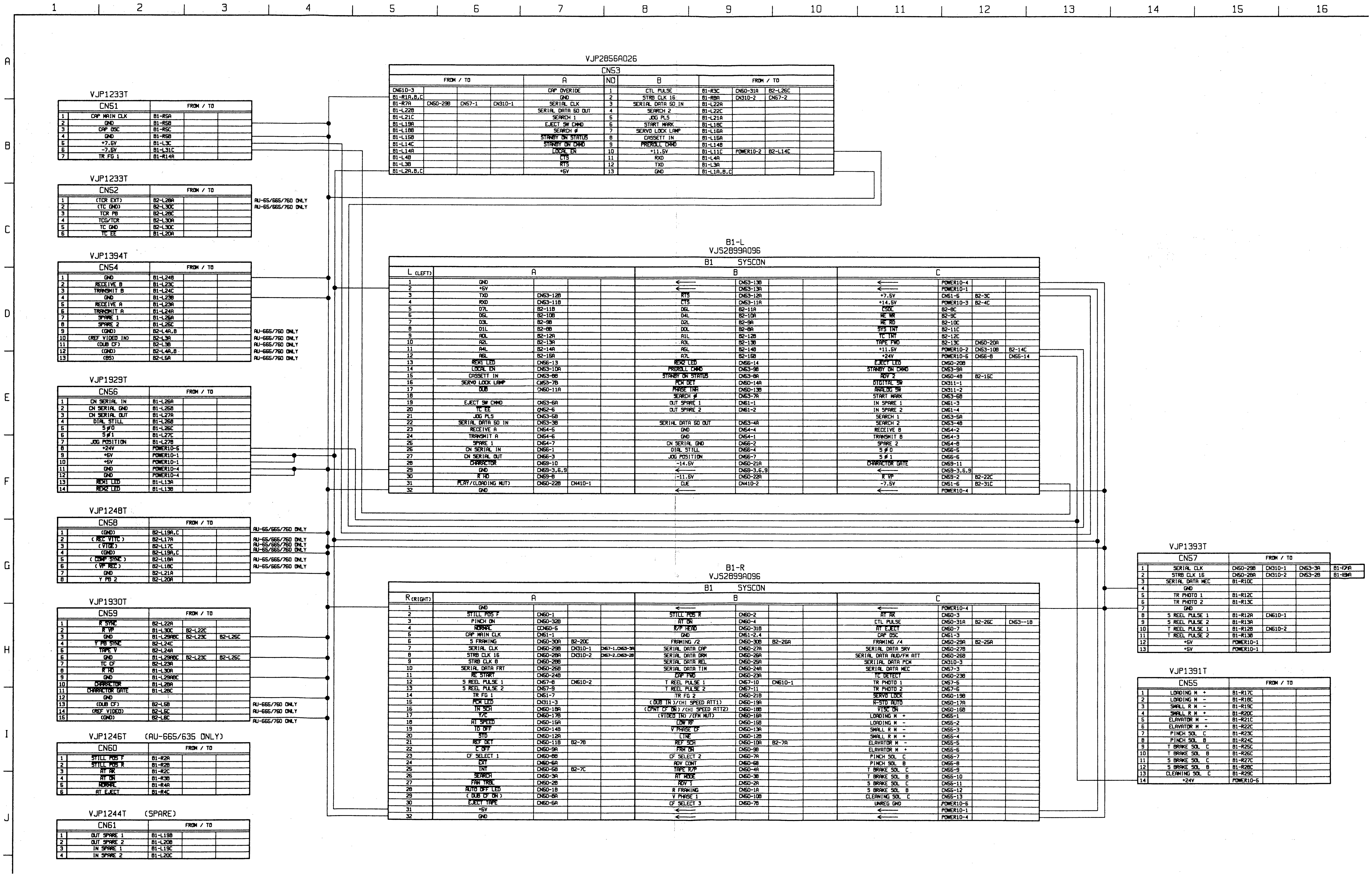

VJP1233T

	CN51	FROM / TO		
1	CAP MAIN CLK	B1-R5A		
2	GND	B1-R5B		
3	CAP OSC	B1-R5C		
4	GND	B1-R5B		
5	+7.5V	B1-L3C		
6	-7.5V	B1-L31C		
7	TR FG 1	B1-R14A		

VJP1233T

	CN52	FROM / TO			
1	(TCR EXT)	B2-L28A			AU-65/665/760 ONLY
2	(TC GND)	B2-L30C			AU-65/665/760 ONLY
3	TCR PB	B2-L28C			
4	TCG/TCR	B2-L30A			
5	TC GND	B2-L30C			
6	TC EE	B1-L20A			

VJP1394T

	CN54	FROM / TO			
1	GND	B1-L24B			
2	RECEIVE B	B1-L23C			
3	TRANSMIT B	B1-L24C			
4	GND	B1-L23B			
5	RECEIVE A	B1-L23A			
6	TRANSMIT A	B1-L24A			
7	SPARE 1	B1-L25A			
8	SPARE 2	B1-L25C			
9	(GND)	B2-L4A,B			AU-665/760 ONLY
10	(REF VIDEO IN)	B2-L3A			AU-665/760 ONLY
11	(DUB CF)	B2-L3B			AU-665/760 ONLY
12	(GND)	B2-L4A,B			AU-665/760 ONLY
13	(BS)	B2-L5A			AU-665/760 ONLY

VJP1929T

	CN56	FROM / TO		
1	CN SERIAL IN	B1-L26A		
2	CN SERIAL GND	B1-L26B		
3	CN SERIAL OUT	B1-L27A		
4	DIAL STILL	B1-L26B		
5	S ø 0	B1-L26C		
6	S ø 1	B1-L27C		
7	JOG POSITION	B1-L27B		
8	+24V	POWER10-5		
9	+5V	POWER10-1		
10	+5V	POWER10-1		
11	GND	POWER10-4		
12	GND	POWER10-4		
13	REM1 LED	B1-L13A		
14	REM2 LED	B1-L13B		

VJP1248T

	CN58	FROM / TO			
1	(GND)	B2-L19A,C			AU-65/665/760 ONLY
2	(REC VITC)	B2-L17A			AU-65/665/760 ONLY
3	(VITC)	B2-L17C			AU-65/665/760 ONLY
4	(GND)	B2-L19A,C			AU-65/665/760 ONLY
5	(COMP SYNC)	B2-L18A			AU-65/665/760 ONLY
6	(VP REC)	B2-L18C			AU-65/665/760 ONLY
7	GND	B2-L21A			
8	Y PB 2	B2-L20A			

VJP1930T

	CN59	FROM / TO			
1	R SYNC	B2-L22A			
2	R VP	B1-L30C	B2-L22C		
3	GND	B1-L29ABC	B2-L23C	B2-L25C	
4	Y PB SYNC	B2-L24C			
5	TAPE V	B2-L24A			
6	GND	B1-L29ABC	B2-L23C	B2-L25C	
7	TC CF	B2-L23A			
8	R HD	B1-L30A			
9	GND	B1-L29ABC			
10	CHARACTOR	B1-L28A			
11	CHARACTOR GATE	B1-L28C			
12	GND				
13	(DUB CF)	B2-L5B			AU-665/760 ONLY
14	(REF VIDEO)	B2-L5C			AU-665/760 ONLY
15	(GND)	B2-L6C			AU-665/760 ONLY

VJP1246T (AU-665/635 ONLY)

	CN60	FROM / TO		
1	STILL POS F	B1-R2A		
2	STILL POS R	B1-R2B		
3	AT AK	B1-R2C		
4	AT ON	B1-R3B		
5	NORMAL	B1-R4A		
6	AT EJECT	B1-R4C		

VJP1244T (SPARE)

	CN61	FROM / TO		
1	OUT SPARE 1	B1-L19B		
2	OUT SPARE 2	B1-L20B		
3	IN SPARE 1	B1-L19C		
4	IN SPARE 2	B1-L20C		

VJP2856A026

CN53

FROM / TO				A	NO	B	FROM / TO			
CN610-3				CAP OVERIDE	1	CTL PULSE	B1-R3C	CN50-31A	B2-L26C	
B1-R1A,B,C				GND	2	STRB CLK 16	B1-R8A	CN310-2	CN57-2	
B1-R7A	CN50-29B	CN57-1	CN310-1	SERIAL CLK	3	SERIAL DATA 50 IN	B1-L22A			
B1-L22B				SERIAL DATA 50 OUT	4	SEARCH 2	B1-L22C			
B1-L21C				SEARCH 1	5	JOG PLS	B1-L21A			
B1-L19A				EJECT SW CMMD	6	START MARK	B1-L18C			
B1-L18B				SEARCH ø	7	SERVO LOCK LAMP	B1-L16A			
B1-L15B				STANBY ON STATUS	8	CASSETT IN	B1-L15A			
B1-L14C				STANBY ON CMMD	9	PREROLL CMMD	B1-L14B			
B1-L14A				LOCAL EN	10	+11.5V	B1-L11C	POWER10-2	B2-L14C	
B1-L4B				CTS	11	RXD	B1-L4A			
B1-L3B				RTS	12	TXD	B1-L3A			
B1-L2A,B,C				+5V	13	GND	B1-L1A,B,C			

B1-L
VJS2899A096

B1 SYSCON

L (LEFT)	A				B				C			
1	GND				←	CN53-13B			←	POWER10-4		
2	+5V				←	CN53-13A			←	POWER10-1		
3	TXD	CN53-12B			RTS	CN53-12A			+7.5V	CN51-5	B2-3C	
4	RXD	CN53-11B			CTS	CN53-11A			+14.5V	POWER10-3	B2-4C	
5	D7L	B2-11B			D6L	B2-11A			CSDL	B2-8C		
6	D5L	B2-10B			D4L	B2-10A			ME WR	B2-9C		
7	D3L	B2-9B			D2L	B2-9A			ME RD	B2-10C		
8	D1L	B2-8B			D0L	B2-8A			SYS INT	B2-11C		
9	A0L	B2-12A			A1L	B2-12B			TC INT	B2-12C		
10	A2L	B2-13A			A3L	B2-13B			TAPE FWD	B2-13C	CN50-20A	
11	A4L	B2-14A			A5L	B2-14B			+11.5V	POWER10-2	CN53-10B	B2-14C
12	A6L	B2-15A			A7L	B2-15B			+24V	POWER10-5	CN56-8	CN55-14
13	REM1 LED	CN56-13			REM2 LED	CN56-14			EJECT LED	CN50-20B		
14	LOCAL EN	CN53-10A			PREROLL CMMD	CN53-9B			STANBY ON CMMD	CN53-9A		
15	CASSETT IN	CN53-8B			STANBY ON STATUS	CN53-8A			ADV 2	CN50-4B	B2-15C	
16	SERVO LOCK LAMP	CN53-7B			PCM DET	CN50-14A			DIGITAL SW	CN311-1		
17	DUB	CN50-11A			PHASE INA	CN50-13B			ANALOG SW	CN311-2		
18					SEARCH ø	CN53-7A			START MARK	CN53-6B		
19	EJECT SW CMMD	CN53-6A			OUT SPARE 1	CN61-1			IN SPARE 1	CN61-3		
20	TC EE	CN52-6			OUT SPARE 2	CN61-2			IN SPARE 2	CN61-4		
21	JOG PLS	CN53-5B							SEARCH 1	CN53-5A		
22	SERIAL DATA 50 IN	CN53-3B			SERIAL DATA 50 OUT	CN53-4A			SEARCH 2	CN53-4B		
23	RECEIVE A	CN54-5			GND	CN54-4			RECEIVE B	CN54-2		
24	TRANSMIT A	CN54-6			GND	CN54-1			TRANSMIT B	CN54-3		
25	SPARE 1	CN54-7			CN SERIAL GND	CN56-2			SPARE 2	CN54-8		
26	CN SERIAL IN	CN56-1			DIAL STILL	CN56-4			S ø 0	CN56-5		
27	CN SERIAL OUT	CN56-3			JOG POSITION	CN56-7			S ø 1	CN56-6		
28	CHARACTOR	CN59-10			-14.5V	CN50-21A			CHARACTOR GATE	CN59-11		
29	GND	CN59-3,6,9			←	CN59-3,6,9			←	CN59-3,6,9		
30	R HD	CN59-8			-11.5V	CN50-22A			R VP	CN59-2	B2-22C	
31	PLAY/(LOADING MUT)	CN50-22B	CN410-1		CUE	CN410-2			-7.5V	CN51-6	B2-31C	
32	GND				←				←	POWER10-4		

B1-R
VJS2899A096

B1 SYSCON

R (RIGHT)	A				B				C			
1	GND				←				←	POWER10-4		
2	STILL POS F	CN60-1			STILL POS R	CN60-2			AT AK	CN60-3		
3	PINCH ON	CN50-32B			AT ON	CN60-4			CTL PULSE	CN50-31A	B2-26C	CN53--1B
4	NORMAL	CCN60-5			R/P HEAD	CN50-31B			AT EJECT	CN60-7		
5	CAP MAIN CLK	CN51-1			GND	CN51-2,4			CAP OSC	CN51-3		
6	S FRAMING	CN50-30A	B2-20C		FRAMING /2	CN50-30B	B2-26A		FRAMING /4	CN50-29A	B2-25A	
7	SERIAL CLK	CN50-29B	CN310-1	CN57-1,CN53-3A	SERIAL DATA CAP	CN50-27A			SERIAL DATA SRV	CN50-27B		
8	STRB CLK 16	CN50-28A	CN310-2	CN57-2,CN53-2B	SERIAL DATA DRM	CN50-26A			SERIAL DATA AUD/FM ATT	CN50-26B		
9	STRB CLK 8	CN50-28B			SERIAL DATA REL	CN50-25A			SERIIAL DATA PCM	CN310-3		
10	SERIAL DATA FRT	CN50-25B			SERIAL DATA TIM	CN50-24A			SERIAL DATA MEC	CN57-3		
11	RE START	CN50-24B			CAP FWD	CN50-23A			TC DETECT	CN50-23B		
12	S REEL PULSE 1	CN57-8	CN610-2		T REEL PULSE 1	CN57-10	CN610-1		TR PHOTO 1	CN57-5		
13	S REEL PULSE 2	CN57-9			T REEL PULSE 2	CN57-11			TR PHOTO 2	CN57-6		
14	TR FG 1	CN51-7			TR FG 2	CN50-21B			SERVO LOCK	CN50-19B		
15	PCM LED	CN311-3			(DUB IN)/(HI SPEED ATT1)	CN50-19A			N-STD AUTO	CN50-17A		
16	IN SCH	CN50-18A			(CPNT CF ON) /(HI SPEED ATT2)	CN50-18B			VISC ON	CN50-16B		
17	Y/C	CN50-17B			(VIDEO IN) /(FM MUT)	CN50-16A			LOADING M +	CN55-1		
18	HI SPEED	CN50-15A			LOW RF	CN50-15B			LOADING M -	CN55-2		
19	ID OFF	CN50-14B			V PHASE CF	CN50-13A			SMALL R M -	CN55-3		
20	STD	CN50-12A			LINE	CN50-12B			SMALL R M +	CN55-4		
21	REF DET	CN50-11B	B2-7B		REF SCH	CN50-10A	B2-7A		ELAVATOR M -	CN55-5		
22	C OFF	CN50-9A			FRM ON	CN50-9B			ELAVATOR M +	CN55-6		
23	CF SELECT 1	CN50-8B			CF SELECT 2	CN50-7A			PINCH SOL C	CN55-7		
24	EXT	CN50-6A			ADV CONT	CN50-6B			PINCH SOL B	CN55-8		
25	INT	CN50-5B	B2-7C		TAPE R/P	CN50-4A			T BRAKE SOL C	CN55-9		
26	SEARCH	CN50-3A			AT MODE	CN50-3B			T BRAKE SOL B	CN55-10		
27	FAN TRBL	CN50-2B			ADV 1	CN50-2A			S BRAKE SOL C	CN55-11		
28	AUTO OFF LED	CN50-1B			R FRAMING	CN50-1A			S BRAKE SOL B	CN55-12		
29	(DUB CF ON)	CN50-8A			V PHASE 1	CN50-10B			CLEANING SOL C	CN55-13		
30	EJECT TAPE	CN50-5A			CF SELECT 3	CN50-7B			UNREG GND	POWER10-6		
31	+5V				←				←	POWER10-1		
32	GND				←				←	POWER10-4		

VJP1393T

	CN57	FROM / TO			
1	SERIAL CLK	CN50-29B	CN310-1	CN53-3A	B1-R7A
2	STRB CLK 16	CN50-28A	CN310-2	CN53-2B	B1-R8A
3	SERIAL DATA MEC	B1-R10C			
4	GND				
5	TR PHOTO 1	B1-R12C			
6	TR PHOTO 2	B1-R13C			
7	GND				
8	S REEL PULSE 1	B1-R12A	CN610-1		
9	S REEL PULSE 2	B1-R13A			
10	T REEL PULSE 1	B1-R12B	CN610-2		
11	T REEL PULSE 2	B1-R13B			
12	+5V	POWER10-1			
13	+5V	POWER10-1			

VJP1391T

	CN55	FROM / TO		
1	LOADING M +	B1-R17C		
2	LOADING M -	B1-R18C		
3	SMALL R M -	B1-R19C		
4	SMALL R M +	B1-R20C		
5	ELAVATOR M -	B1-R21C		
6	ELAVATOR M +	B1-R22C		
7	PINCH SOL C	B1-R23C		
8	PINCH SOL B	B1-R24C		
9	T BRAKE SOL C	B1-R25C		
10	T BRAKE SOL B	B1-R26C		
11	S BRAKE SOL C	B1-R27C		
12	S BRAKE SOL B	B1-R28C		
13	CLEANING SOL C	B1-R29C		
14	+24V	POWER10-5		

REVERSE SIDE **AUDIO SCHEMATIC DIAGRAM**

TYPE \ MODEL	AU-665	AU-65	AU-63	AU-62
NTSC	VEP80549B	VEP80549A	VEP80549B	VEP80549A
PAL	VEP80549C	VEP80549A	VEP80549B	VEP80549A

B0 (B,MOTHER) SCHEMATIC DIAGRAM 2/2

VJP1230T (PCM ONLY)

CN310		FROM / TO			
1	SERIAL CLK	CN50-29B	CN57-1	CN53-3A	B1-R7A
2	STRB CLK 16	CN50-28A	CN57-2	CN53-2B	B1-R8A
3	SERIAL DATA PCM	B1-R9C			

VJP1230T (PCM ONLY)

CN311		FROM / TO		
1	DIGITAL SW	B1-L16C		
2	ANALOG SW	B1-L17C		
3	PCM LED	B1-R15A		

VJP1229T (PAL ONLY)

CN410		FROM / TO		
1	PLAY /(LOADING MUT)	CN50-22B	B1-L31A	
2	CUE	B1-L31B		

VJP1230T (SPARE)

CN610		FROM / TO		
1	T REEL PULSE 1	CN57-10	B1-R12B	
2	S REEL PULSE 1	CN57-8	B1-R12A	
3	CAP OVERIDE	CN53-1A		

VJP1709

POWER10		FROM / TO		
1	+6V			
2	+11.5V			
3	+14.5V			
4	GND			
5	+24V			
6	UNREG GND			

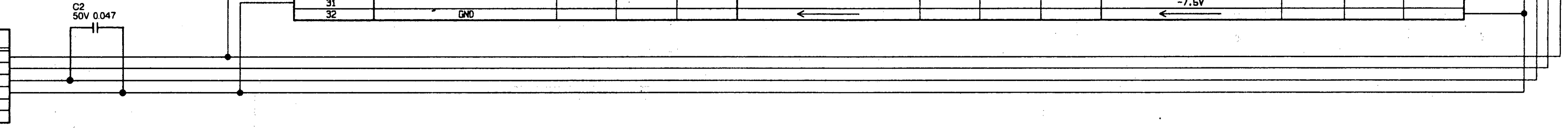

B2
VJS2899A096

B2 TCG/TCR (OPTION)

L (LEFT)	A				B				C			
1	GND				←				←			
2	+5V				←				←			
3	REF VIDEO IN	CN54-10			DUB CF IN	CN54-11			+7.5V	B1-L3C	CN51-5	
4	GND	CN54-9,12			GND	CN54-9,12			+14.5V	B1-L4C		
5	BS	CN54-13			DUB CF	CN59-13			REF VIDEO	CN59-14		
6	GND				GND				GND	CN59-15		
7	REF SCH	B1-R21B	CN50-10A		REF DET	B1-R21A	CN50-11B		INT	B1-R25A	CN50-5B	
8	D0L	B1-L8B			D1L	B1-L8A			CS DL	B1-L5C		
9	D2L	B1-L7B			D3L	B1-L7A			ME WR	B1-L6C		
10	D4L	B1-L6B			D5L	B1-L6A			ME RD	B1-L7C		
11	D6L	B1-L5B			D7L	B1-L5A			SYS INT	B1-L8C		
12	A0L	B1-L9A			A1L	B1-L9B			TC INT	B1-L9C		
13	A2L	B1-L10A			A3L	B1-L10B			TAPE FWD	B1-L10C	CN50-20A	
14	A4L	B1-L11A			A5L	B1-L11B			+11.5V	B1-L11C	CN53-10B	POWER10-2
15	A6L	B1-L12A			A7L	B1-L12B			ADV 2	B1-L15C	CN50-4B	
16	GND				GND				GND			
17	REC VITC	CN58-2							VIGE	CN58-3		
18	COMP SYNC	CN58-5							VP REC	CN58-6		
19	GND	CN58-1,4							GND	CN58-1,4		
20	Y PB 2	CN58-8							S FRAMING	B1-R6A	CN50-30A	
21	GND	CN58-7							GND			
22	R SYNC	CN59-1							RVP	CN59-2	B1-L30C	
23	TC CF	CN59-7							GND	CN59-3,6		
24	TAPE V	CN59-5							Y PB SYNC	CN59-4		
25	FRAMING /4	B1-R6C	CN50-29A						GND	CN59-3,6		
26	FRAMING /2	B1-R6B	CN50-30B						CTL PULSE	B1-R3C	CN50-31A	CN53-1B
27	TCG/TCR ON	CN50-32A							GND			
28	TCR EXT	CN52-1							TCR PB	CN52-3		
29	GND								GND			
30	TCG/TCR	CN52-4							TCG/TCR GND	CN52-2,5		
31									-7.5V			
32	GND				←				←			

VJP2893A064

CN50

FROM / TO				A	NO	B	FROM / TO			
B1-R28B				R FRAMING	1	AUTO OFF LED	B1-R28A			
B1-R27B				ADV 1	2	FAN TRBL	B1-R27A			
B1-R26A				SEARCH	3	AT MODE	B1-R26B			
B1-R25B				TAPE R/P	4	ADV2	B1-L15C	B2-L15C		
B1-R30A				EJECT TAPE	5	INT	B1-R25A	B2-L7C		
B1-R24A				EXT	6	ADV CONT	B1-R24B			
B1-R23B				CF SELECT 2	7	CF SELECT 3	B1-R30B			
B1-R29A				(DUB CF ON)	8	CF SELECT 1	B1-R23A			
B1-R22A				C OFF	9	FRM ON	B1-R22B			
B1-R21B	B2-L7A			REF SCH	10	V PHASE 1	B1-R29B			
B1-L17A				(DUB)	11	REF DET	B1-R21A	B2-L7B		
B1-R20A				STD	12	LINE	B1-R20B			
B1-R19B				V PHASE CF	13	PHASE INH	B1-L17B			
B1-L16B				PCM DET	14	ID OFF	B1-R19A			
B1-R18A				HI SPEED	15	LOW RF	B1-R18B			
B1-R17B				(VIDEO IN)/(FM MOT)	16	VISC ON	B1-R16C			
B1-R15C				N-STD AUTO	17	Y/C	B1-R17A			
B1-R16A				IN SCH	18	(CPNT CF ON)/(HI SPEED ATT2)	B1-R16B			
B1-R15B				(DUB IN)/(HI SPEED ATT1)	19	SERVO LOCK	B1-R14C			
B1-L10C	B2-L13C			TAPE TWD	20	EJECT LED	B1-L13C			
B1-L28B				-14.5V	21	TR FG2	B1-R14B			
B1-L30B				-11.5V	22	PLAY/(LOADING MUT)	B1-L31A	CN410-1		
B1-R11B				CAP FWD	23	TC DETECT	B1-R11C			
B1-R10B				SERIAL DATA TIM	24	RE START	B1-R11A			
B1-R9B				SERIAL DATA REL	25	SERIAL DATA FRT	B1-R10A			
B1-R8B				SERIAL DATA DRM	26	SERIAL DATA AUD/FM ATT	B1-R8C			
B1-R7B				SERIAL DATA CAP	27	SERIAL DATA SRV	B1-R7C			
B1-R8A	CN310-2	CN53-2B	CN57-2	STRB CLK 16	28	STRB CLK 8	B1-R9A			
B1-R6C	B2-L25A			FRAMING /4	29	SERIAL CLK	B1-R7A	CN310-1	CN53-3A	CN57-1
B1-R6A	B2-L20C			S FRAMING	30	FRAMING /2	B1-R6B	B2-26A		
B1-R3C	B2-L26C	CN53-1B		CLT PULSE	31	R/P HEAD	B1-R4B			
B2-27A				TCG/TCR ON	32	PINCH ON	B1-R3A			

TYPE \ MODEL	AU-665	AU-65	AU-63	AU-62
NTSC	VEP86088B	VEP86088A	VEP86088D	VEP86088C
PAL	VEP86088N	VEP86088E	VEP86088F	VEP86088M

B1 (SYSTEM CONTROL) SCHEMATIC DIAGRAM 1/6

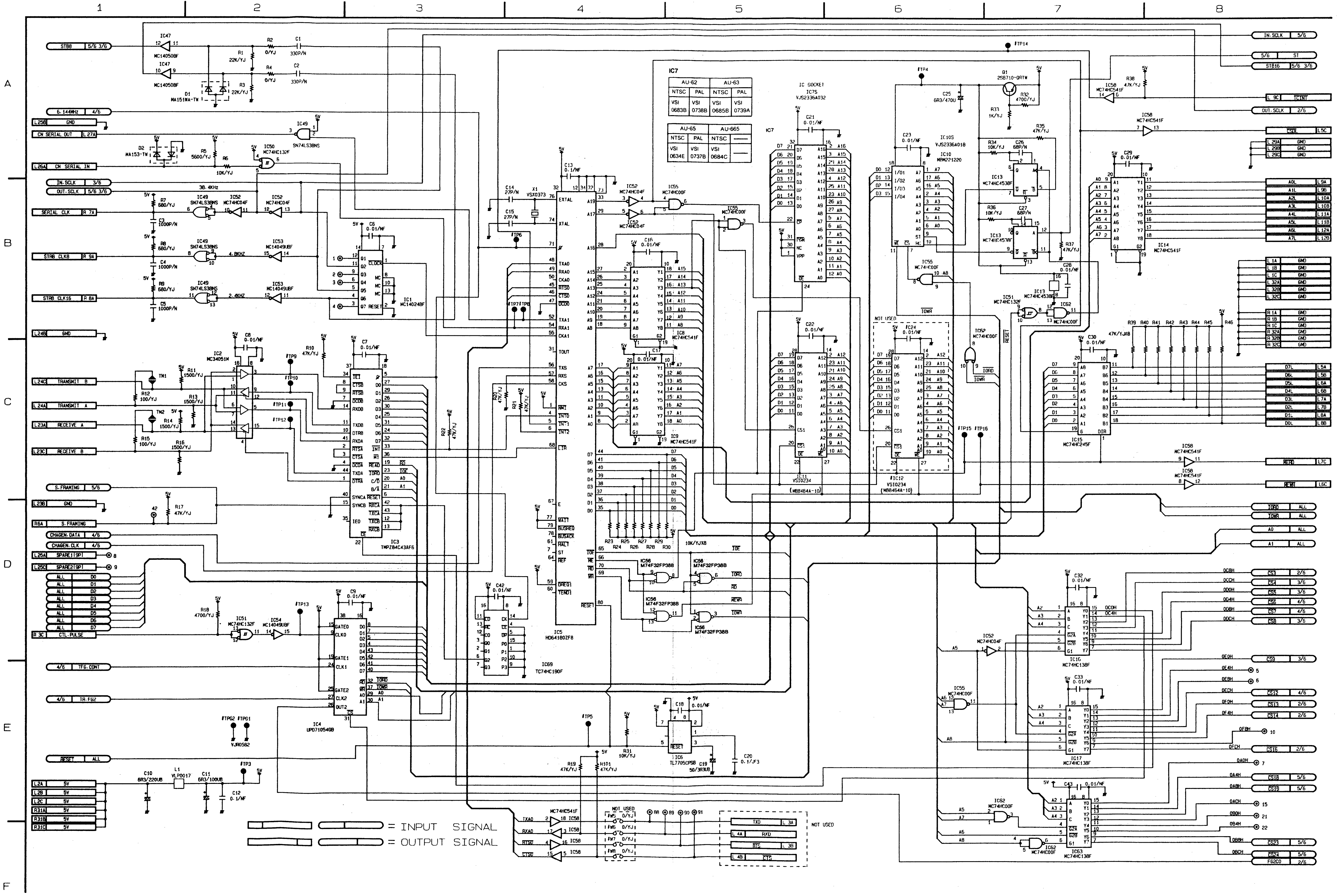
1
2
3
4
5
6
7
8
A
B
C
D
E
F
STB8
6.144MHz
GND
CN SERIAL OUT
CN SERIAL IN
IN.SCLK
OUT.SCLK
SERIAL CLK
STRB CLK8
STRB CLK16
TRANSMIT B
TRANSMIT A
RECEIVE A
RECEIVE B
S.FRAMING
CHAGEN.DATA
CHAGEN.CLK
SPARE1(9P)
SPARE2(9P)
CTL.PULSE
TFG.CONT
TR.FG2
RESET
ALL
5V
IC1 MC14024BF
IC2 MC34051M
IC3 TMPZ84C43AF6
IC4 UPD71054GB
IC5 HD64180ZF8
IC6 TL7705CPSB
IC7
IC8 MC74HC541F
IC9 MC74HC541F
IC10 MB8221220
IC11 VSI0234
IC12 VSI0234
IC13 MC74HC4538F
IC14 MC74HC541F
IC15 MC74HC245F
IC16 MC74HC138F
IC17 MC74HC138F
IC47 MC14050BF
IC49 SN74LS38NS
IC50 MC74HC132F
IC51 MC74HC132F
IC52 MC74HC04F
IC53 MC14049UBF
IC54 MC14049UBF
IC55 MC74HC00F
IC56 M74F32FP38B
IC58 MC74HC541F
IC62 MC74HC00F
IC63 MC74HC138F
IC69 TC74HC190F
Q1 2SB710-QRTW
X1 VSX0373
D1 MA151WA-TW
D2 MA153-TW
L1 VLP0017
IC75 VJS2336A032
IC105 VJS2336A018
IN.SCLK 5/6
5/6 ST
STB16 5/6 3/6
L 9C TCINT
OUT.SCLK 2/6
CSDL
IORD ALL
IOWR ALL
A0 ALL
A1 ALL
CS3 2/6
CS4 3/6
CS5 3/6
CS6 4/6
CS7 4/6
CS8 3/6
CS9 3/6
CS12 4/6
CS13 2/6
CS14 2/6
CS16 2/6
CS18 5/6
CS19 5/6
CS23 5/6
CS24 5/6
FG2CO 2/6
NOT USED
TXD
RXD
RTS
CTS
= INPUT SIGNAL
= OUTPUT SIGNAL

REVERSE SIDE **B. MOTHER SCHEMATIC DIAGRAM**

MODEL TYPE	AU-665	AU-65	AU-63	AU-62
NTSC	VEP86088B	VEP86088A	VEP86088D	VEP86088C
PAL	VEP86088N	VEP86088E	VEP86088F	VEP86088M

B1 (SYSTEM CONTROL) SCHEMATIC DIAGRAM 2/6

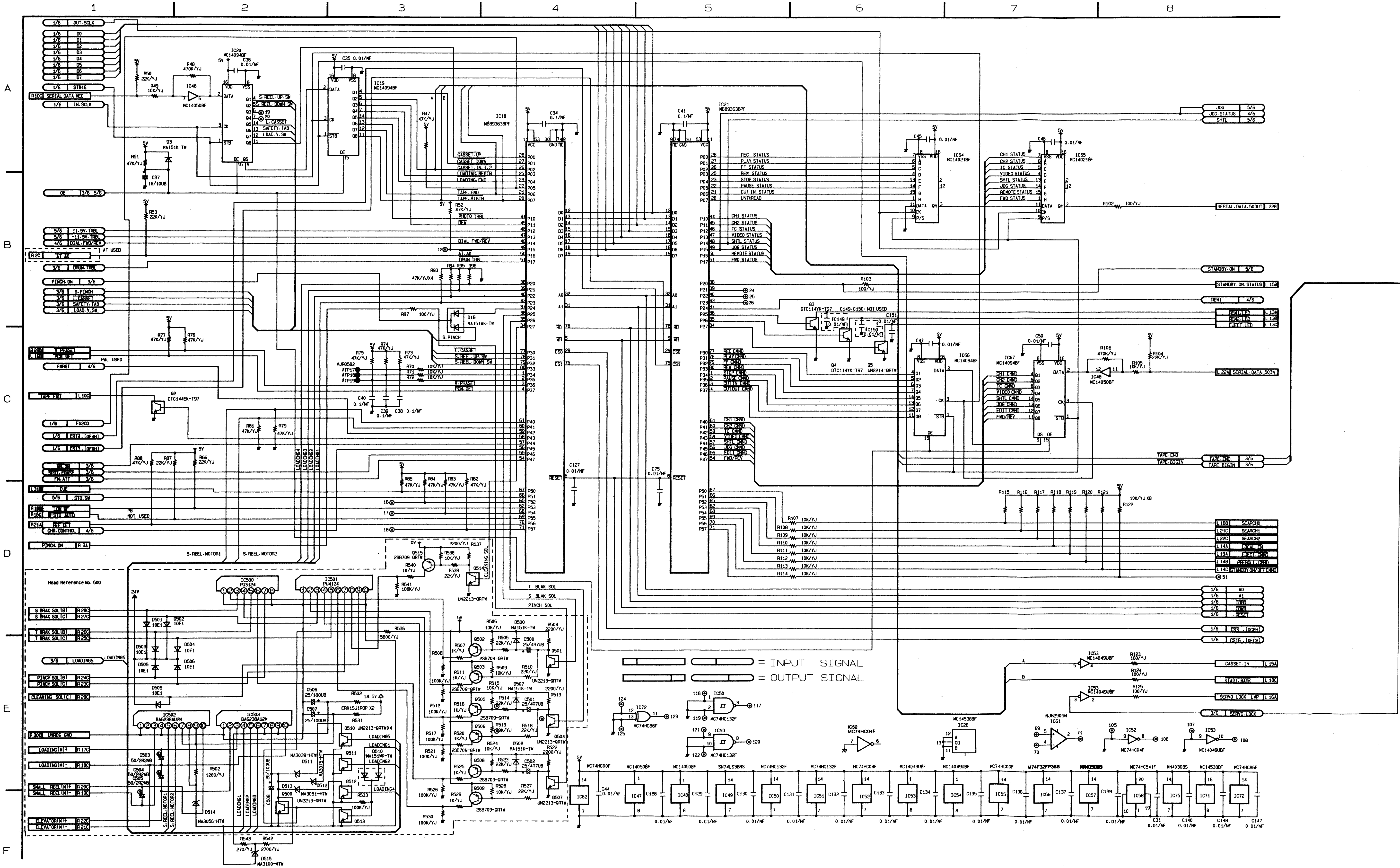
1
2
3
4
5
6
7
8
A
B
C
D
E
F
OUT.SCLK
D0
D1
D2
D3
D4
D5
D6
D7
STB16
SERIAL.DATA.MEC
IN.SCLK
IC20 MC14094BF
IC19 MC14094BF
IC18 MB89363BPF
IC21 MB89363BPF
IC48 MC14050BF
IC64 MC14021BF
IC65 MC14021BF
IC56 MC14094BF
IC67 MC14094BF
S.REEL.UP.SW
S.REEL.DOWN.SW
L.CASSET
SAFETY.TAB
LOAD.Y.SW
CASSET.UP
CASSET.DOWN
CASSET.IN.1.2
LOADING.BEGIN
LOADING.END
TAPE.END
TAPE.BIGIN
PHOTO.TRBL
DEW
DIAL.FWD/REV
AT.AK
DRUM.TRBL
11.5V.TRBL
-11.5V.TRBL
AT USED
S.PINCH
PINCH.ON
T.PHASE1
PCM.DET
PAL USED
FGRST
TAPE.FWD
Q2 DTC144EK-T97
CUE
STD.SW
PB NOT USED
REF.DET
CHR.CONTROL
S.REEL.MOTOR1
S.REEL.MOTOR2
REC.STATUS
PLAY.STATUS
FF.STATUS
REW.STATUS
STOP.STATUS
PAUSE.STATUS
CUT.IN.STATUS
UNTHREAD
CH1.STATUS
CH2.STATUS
TC.STATUS
VIDEO.STATUS
SHTL.STATUS
JOG.STATUS
REMOTE.STATUS
FWD.STATUS
REC.CMND
PLAY.CMND
FF.CMND
REW.CMND
STOP.CMND
PAUSE.CMND
CUT.IN.CMND
CUT.OUT.CMND
CH1.CMND
CH2.CMND
TC.CMND
VIDEO.CMND
SHTL.CMND
JOG.CMND
EDIT.CMND
FWD/REV
JOG
JOG.STATUS
SHTL
SERIAL.DATA.50OUT
STANDBY.ON
STANDBY.ON.STATUS
REM1
REM1.LED
REM2.LED
EJECT.LED
SERIAL.DATA.50IN
TAPE.END
TAPE.BIGIN
SEARCH0
SEARCH1
SEARCH2
LOCAL.FR
EJECT.CMND
PREROLL.CMND
STANDBY.ON/OFF.CMND
A0
A1
IORD
IOWR
RESET
CS3.(0C8H)
CS16.(0FCH)
CASSET.IN
START.MARK
SERVO.LOCK.LMP
SERVO.LOCK
Head Reference No. 500
IC500 PU3124
IC501 PU4124
IC502 BA6238AU2M
IC503 BA6238AU2M
S.BRAK.SOL(B)
S.BRAK.SOL(C)
T.BRAK.SOL(B)
T.BRAK.SOL(C)
LOADING5
PINCH.SOL(B)
PINCH.SOL(C)
CLEANING.SOL(C)
UNREG.GND
LOADING(M)+
LOADING(M)-
SMALL.REEL(M)+
SMALL.REEL(M)-
ELEVATOR(M)+
ELEVATOR(M)-
T.BLAK.SOL
S.BLAK.SOL
PINCH.SOL
24V
14.5V
= INPUT SIGNAL
= OUTPUT SIGNAL

B1 (SYSTEM CONTROL) SCHEMATIC DIAGRAM 3/6

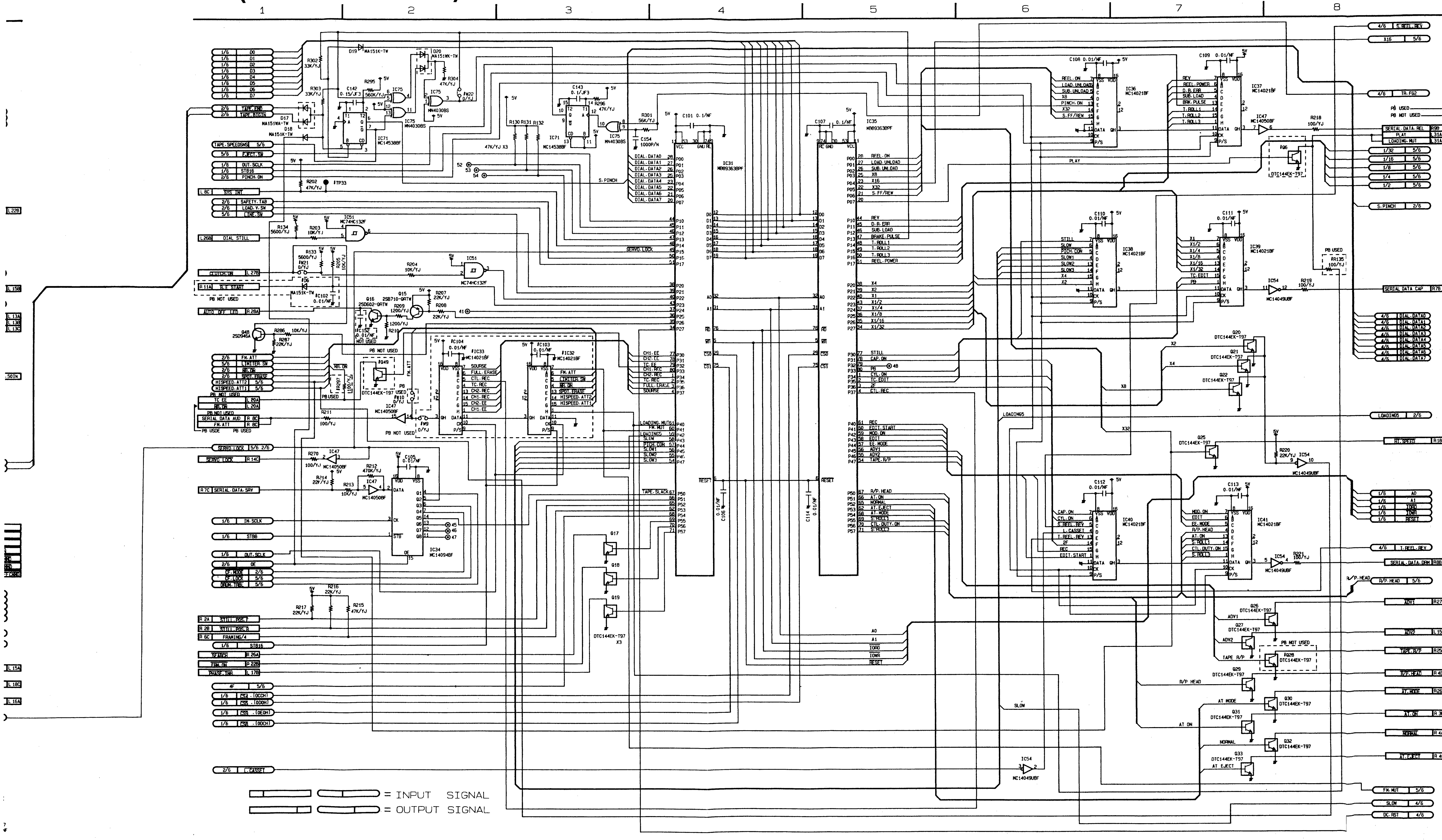
1
2
3
4
5
6
7
8
IC31 MB89363BPF
IC35 MB89363BPF
IC32 MC14021BF
IC33 MC14021BF
IC34 MC14094BF
IC36 MC14021BF
IC37 MC14021BF
IC38 MC14021BF
IC39 MC14021BF
IC40 MC14021BF
IC41 MC14021BF
IC47 MC14050BF
IC51 MC74HC132F
IC54 MC14049UBF
IC71 MC14538BF
IC75 MN4030BS
Q15 2SB710-QRTW
Q16 2SD602-QRTW
Q48 2SD946A
DTC144EK-T97
PB NOT USED
PB USED
SERIAL DATA CAP
SERIAL.DATA.SRV
SERVO.LOCK
S.PINCH
PLAY
RESET
5V

▭▭ ⊂▭⊃ = INPUT SIGNAL

▭▭ ⊂▭⊃ = OUTPUT SIGNAL

MODEL TYPE	AU-665	AU-65	AU-63	AU-62
NTSC	VEP86088B	VEP86088A	VEP86088D	VEP86088C
PAL	VEP86088N	VEP86088E	VEP86088F	VEP86088M

B1 (SYSTEM CONTROL) SCHEMATIC DIAGRAM 4/6

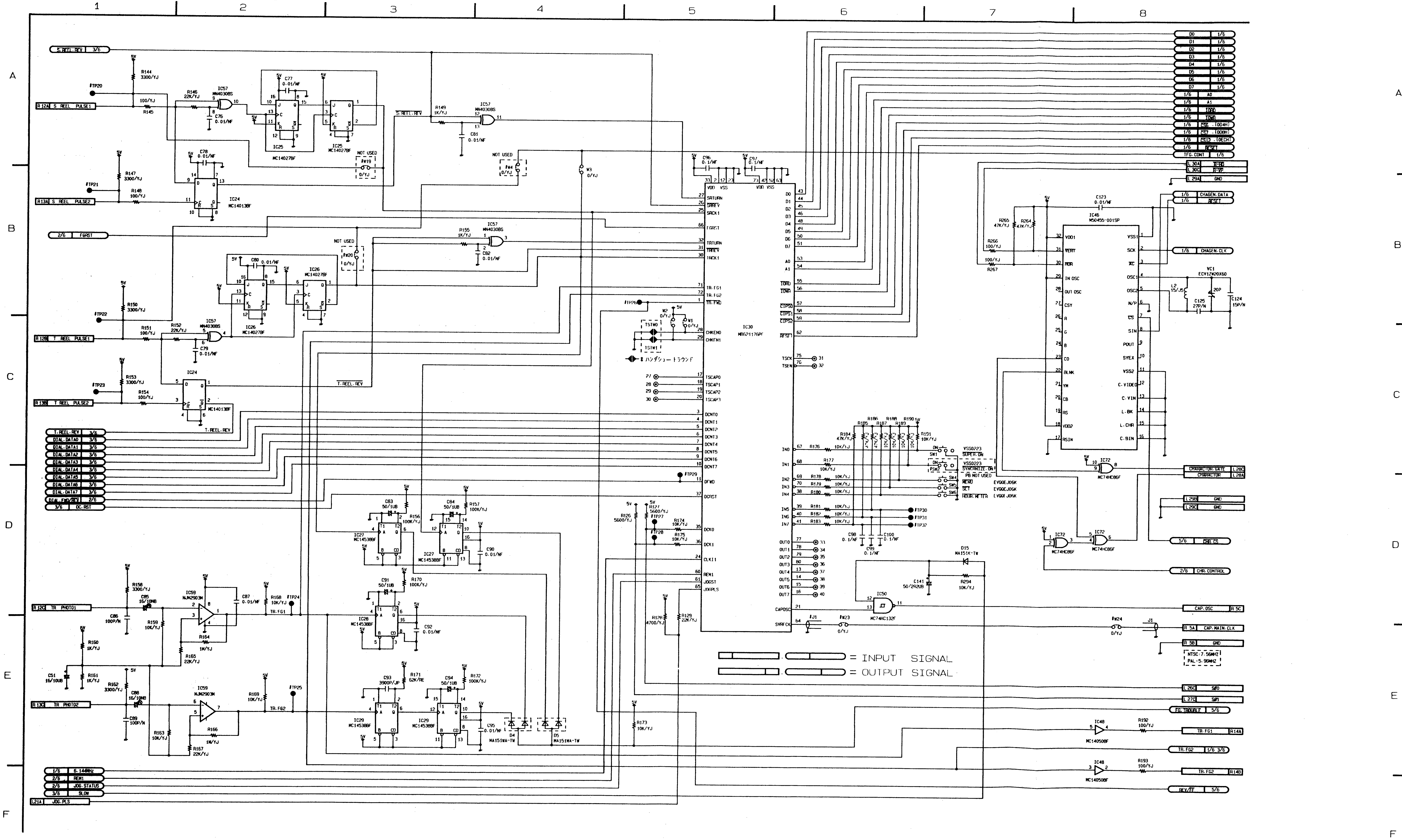
1
2
3
4
5
6
7
8
A
B
C
D
E
F
S.REEL.REV 3/6
R12A S REEL PULSE1
R13A S REEL PULSE2
2/6 FGRST
R12B T REEL PULSE1
R13B T REEL PULSE2
T.REEL.REV 3/6
DIAL.DATA0 3/6
DIAL.DATA1 3/6
DIAL.DATA2 3/6
DIAL.DATA3 3/6
DIAL.DATA4 3/6
DIAL.DATA5 3/6
DIAL.DATA6 3/6
DIAL.DATA7 3/6
DIAL.FWD/REV 2/6
3/6 DC.RST
R12C TR PHOTO1
R13C TR PHOTO2
1/6 6.144MHz
2/6 REM1
2/6 JOG.STATUS
3/6 SLOW
L21A JOG.PLS
IC24 MC14013BF
IC25 MC14027BF
IC26 MC14027BF
IC57 MN4030BS
IC27 MC14538BF
IC28 MC14538BF
IC29 MC14538BF
IC59 NJM2903M
IC30 MB621176PF
IC45 M50455-001SP
IC50 MC74HC132F
IC72 MC74HC86F
IC48 MC14050BF
NOT USED
S.REEL.REV
T.REEL.REV
TR.FG1
TR.FG2
D4 MA151WA-TW
D5 MA151WA-TW
D15 MA151K-TW
VC1 ECV1ZW20X60
TSTW0
TSTW1
ハンダショートラウンド
D0 1/6
D1 1/6
D2 1/6
D3 1/6
D4 1/6
D5 1/6
D6 1/6
D7 1/6
1/6 A0
1/6 A1
1/6 TORD
1/6 TOWR
1/6 FS6 (004H)
1/6 FS7 (008H)
1/6 FS12 (0ECH)
1/6 RESET
TFG.CONT 1/6
L30A R-RD
L30C R-WR
L29A GND
1/6 CHAGEN.DATA
1/6 RESET
1/6 CHAGEN.CLK
CHARACTOR.GATE L28C
CHARACTOR L28A
L29B GND
L29C GND
5/6 CHR.CS
2/6 CHR.CONTROL
CAP.OSC R5C
R5A CAP.MAIN.CLK
R5B GND
NTSC: 7.56MHz
PAL: 5.96MHz
L26C SWD
L27C SWI
FG.TROUBLE 5/6
TR.FG1 R14A
TR.FG2 1/6 3/6
TR.FG2 R14B
REV/FF 5/6
SUPER.ON
SYNCHRONIZE.ON
PB NOT USED
REMO
SET
HOUR METER
= INPUT SIGNAL
= OUTPUT SIGNAL

REVERSE SIDE SYSTEM CONTROL SCHEMATIC DIAGRAM

B1 (SYSTEM CONTROL) SCHEMATIC DIAGRAM 5/6

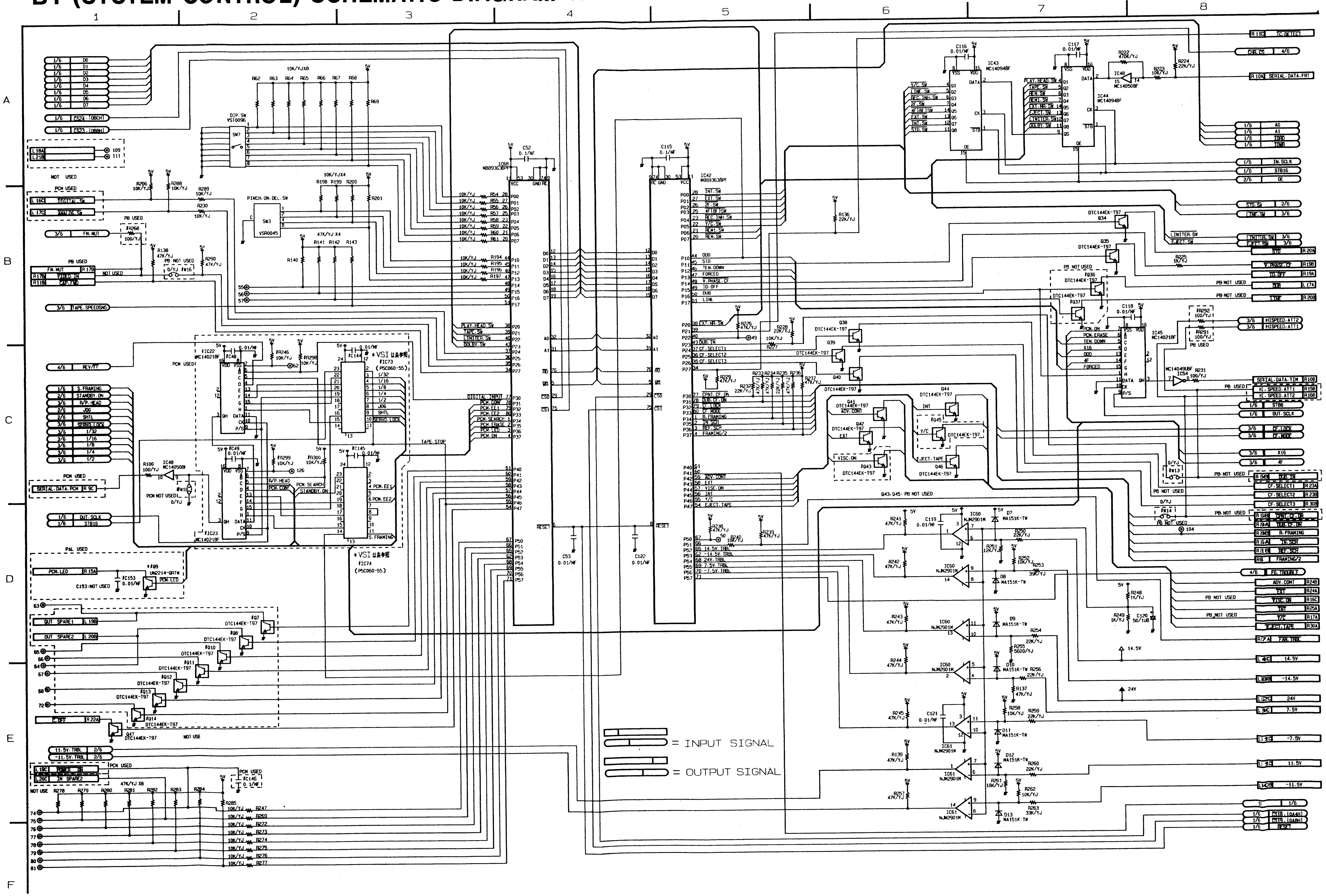

1
2
3
4
5
6
7
8
A
B
C
D
E
F
IC58 MB89363BPF
IC42 MB89363BPF
IC43 MC14094BF
IC44 MC14094BF
IC48 MC14050BF
IC45 MC14021BF
IC22 MC14021BF
IC23 MC14021BF
IC73 (P5C060-55)
IC74 (P5C060-55)
IC50 NJM2901M
IC51 NJM2901M
IC54 MC14049UBF
DIP.SW VS10096
PINCH.ON.DEL.SW
SW3 VSR0045
10K/YJX8
10K/YJX4
47K/YJ X4
47K/YJ X8
DTC144EK-T97
MA151K-TW
UN2214-QRTW
NOT USED
PCM USED
PB USED
PAL USED
PB NOT USED
*VSI は未参照
RESET
TAPE.STOP
PLAY.HEAD.SW
TAPE.SW
LIMITER.SW
DOLBY.SW
DIGITAL.INPUT
PCM.CONF
PCM.EE1
PCM.EE2
PCM.SEARCH
PCM.ERASE
PCM.LED
PCM.ON
INT.SW
EXT.SW
CF.SW
4F10.TSW
REC.INH.SW
Y/C.SW
RCM1.SW
RCM.SW
TEN.DOWN
FORCED
V.PHASE.CF
ID OFF
DUB
LINL
DUB.TR
CF.SELECT1
CF.SELECT2
CF.SELECT3
CPNT.CF.ON
CF.LOCK
CF.MODE
R.FRAMING
IN.SCH
REF.SCH
FRAMING/2
ADV.CONT
EXT
VISC.ON
INT
Y/C
EJECT.TAPE
14.5V.TRBL
-14.5V.TRBL
24V.TRBL
7.5V.TRBL
-7.5V.TRBL
TC.DETECT
CHR.CS
SERIAL.DATA.FRT
IN.SCLK
STB16
OE
STD.SW
TNE.SW
LIMITER.SW
EJECT.SW
HISPEED.ATT2
HISPEED.ATT1
SERIAL.DATA.TIM
H.SPEED.ATT1
H.SPEED.ATT2
OUT.SCLK
X16
4F
FG.TROUBLE
FAN.TRBL
14.5V
-14.5V
24V
7.5V
-7.5V
11.5V
-11.5V
CSTB.(0A4H)
CSTB.(0A0H)
RESET
S.FRAMING
STANDBY.ON
R/P.HEAD
JOG
SHTL
SERVO.LOCK
1/32
1/16
1/8
1/4
1/2
SERIAL.DATA.PCM
OUT.SCLK
STB16
PCM.LED
OUT SPARE1
OUT SPARE2
C.OFF
11.5V.TRBL
-11.5V.TRBL
POWER.ON
IN SPARE2
FM.MUT
TAPE.SPEEDSNS
REV/FF
DIGITAL.SW
ANALOG.SW
VIDEO.IN
CAP.FWD
C524 (0BCH)
C523 (0B8H)
= INPUT SIGNAL
= OUTPUT SIGNAL
Q43-Q45: PB NOT USED

TYPE \ MODEL	AU-665	AU-65	AU-63	AU-62
NTSC	VEP86088B	VEP86088A	VEP86088D	VEP86088C
PAL	VEP86088N	VEP86088E	VEP86088F	VEP86088M

B1 (SYSTEM CONTROL) SCHEMATIC DIAGRAM 6/6

	AU-65		AU-62		AU-665		AU-63		AU-760	
REF NO	NTSC	PAL	NTSC	PAL	NTSC	PAL	NTSC	PAL	NTSC	PAL
C24(0.01/NF)	—	—	—	—	—		—	—		—
C48	—	—	—	—	—		—	—		0.01/NF
C49	—	—	—	—	—		—	—		0.01/NF
C102	0.01/NF	0.01/NF	—	—	0.01/NF		—	—		0.01/NF
C103	0.01/NF	0.01/NF	—	—	0.01/NF		—	—		0.01/NF
C104	0.01/NF	0.01/NF	—	—	0.01/NF		—	—		0.01/NF
C144	—	—	—	—	—		—	—		0.01/NF
C145	—	—	—	—	—		—	—		0.01/NF
C146	—	—	—	—	—		—	—		0.1/NF
C149(0.01/NF)	—	—	—	—	—		—	—		—
C150(0.01/NF)	—	—	—	—	—		—	—		—
C152(0.01/NF)	—	—	—	—	—		—	—		—
C153(0.01/NF)	—	—	—	—	—		—	—		—
D6	MA151K-TW	MA151K-TW	—	—	MA151K-TW		—	—		MA151K-TW
IC12(VSI0234)	—	—	—	—	—		—	—		—
IC22	—	—	—	—	—		—	—		MC14021BF
IC23	—	—	—	—	—		—	—		MC14021BF
IC32	MC14021BF	MC14021BF	—	—	MC14021BF		—	—		MC14021BF
IC33	MC14021BF	MC14021BF	—	—	MC14021BF		—	—		MC14021BF
IC73	—	—	—	—	—		—	—		(P5C060-55)
IC74	—	—	—	—	—		—	—		(P5C060-55)
J1	—	—	—	—	—		—	—		—
Q6	—	DTC144EK-T97	—	—	—		—	—		DTC144EK-T97
Q7(DTC144EK-T97)	—	—	—	—	—		—	—		—
Q8(DTC144EK-T97)	—	—	—	—	—		—	—		—
Q9	—	UN2214-QRTW	—	UN2214-QRTW	—		—	UN2214-QRTW		UN2214-QRTW
Q10(DTC144EK-T97	—	—	—	—	—		—	—		—
Q11(DTC144EK-T97	—	—	—	—	—		—	—		—
Q12(DTC144EK-T97	—	—	—	—	—		—	—		—
Q13(DTC144EK-T97	—	—	—	—	—		—	—		—
Q14(DTC144EK-T97	—	—	—	—	—		—	—		—
Q28	DTC144EK-T97	DTC144EK-T97	—	—	DTC144EK-T97		—	—		DTC144EK-T97
Q36	DTC144EK-T97	DTC144EK-T97	—	—	DTC144EK-T97		—	—		DTC144EK-T97
Q37	DTC144EK-T97	DTC144EK-T97	—	—	DTC144EK-T97		—	—		DTC144EK-T97
Q43	DTC144EK-T97	DTC144EK-T97	—	—	DTC144EK-T97		—	—		DTC144EK-T97
Q45	DTC144EK-T97	DTC144EK-T97	—	—	DTC144EK-T97		—	—		DTC144EK-T97
Q49	DTC144EK-T97	DTC144EK-T97	—	—	DTC144EK-T97		—	—		DTC144EK-T97
R135	—	—	100/YJ	100/YJ	—		100/YJ	100/YJ		—
R246	—	—	—	—	—		—	—		10K/YJ
R268	—	—	100/YJ	100/YJ	—		100/YJ	100/YJ		—
R291	—	—	100/YJ	100/YJ	—		100/YJ	100/YJ		—
R297	—	—	100/YJ	100/YJ	—		100/YJ	100/YJ		—
R298	—	—	—	—	—		—	—		10K/YJ
R299	—	—	—	—	—		—	—		10K/YJ
R300	—	—	—	—	—		—	—		10K/YJ

VSI [illegible]

	AU-65		AU-62		AU-665		AU-63		AU-760	
REF NO	NTSC	PAL	NTSC	PAL	NTSC	PAL	NTSC	PAL	NTSC	PAL
W4(0/YJ)	—	—	—	—	—		—	—		—
W5(0/YJ)	—	—	—	—	—		—	—		—
W6(0/YJ)	—	—	—	—	—		—	—		—
W7(0/YJ)	—	—	—	—	—		—	—		—
W8(0/YJ)	—	—	—	—	—		—	—		—
W9	0/YJ	0/YJ	—	—	0/YJ		—	—		0/YJ
W10	—	—	0/YJ	0/YJ	—		0/YJ	0/YJ		—
W13	0/YJ	0/YJ	—	—	0/YJ		—	—		0/YJ
W14	0/YJ	0/YJ	—	—	0/YJ		—	—		0/YJ
W16	0/YJ	0/YJ	—	—	0/YJ		—	—		0/YJ
W18	0/YJ	0/YJ	0/YJ	0/YJ	0/YJ		0/YJ	0/YJ		—
W19(0/YJ)	—	—	—	—	—		—	—		—
W20(0/YJ)	—	—	—	—	—		—	—		—
W21(0/YJ)	—	—	—	—	—		—	—		—
W22(0/YJ)	—	—	—	—	—		—	—		—
W23	0/YJ	0/YJ	0/YJ	0/YJ	0/YJ		0/YJ	0/YJ		0/YJ
W24	0/YJ	0/YJ	0/YJ	0/YJ	0/YJ		0/YJ	0/YJ		0/YJ
TPG1	VJR0582	VJR0582	VJR0582	VJR0582	VJR0582		VJR0582	VJR0582		VJR0582
TPG2	VJR0582	VJR0582	VJR0582	VJR0582	VJR0582		VJR0582	VJR0582		VJR0582
TP3(VJR0582)	—	—	—	—	—		—	—		—
TP4(VJR0582)	—	—	—	—	—		—	—		—
TP5(VJR0582)	—	—	—	—	—		—	—		—
TP6(VJR0582)	—	—	—	—	—		—	—		—
TP7(VJR0582)	—	—	—	—	—		—	—		—
TP8(VJR0582)	—	—	—	—	—		—	—		—
TP9(VJR0582)	—	—	—	—	—		—	—		—
TP10(VJR0582)	—	—	—	—	—		—	—		—
TP11(VJR0582)	—	—	—	—	—		—	—		—
TP12(VJR0582)	—	—	—	—	—		—	—		—
TP13(VJR0582)	—	—	—	—	—		—	—		—
TP14(VJR0582)	—	—	—	—	—		—	—		—
TP15(VJR0582)	—	—	—	—	—		—	—		—
TP16(VJR0582)	—	—	—	—	—		—	—		—
TP17	VJR0582	VJR0582	VJR0582	VJR0582	VJR0582		VJR0582	VJR0582		VJR0582
TP18	VJR0582	VJR0582	VJR0582	VJR0582	VJR0582		VJR0582	VJR0582		VJR0582
TP19	VJR0582	VJR0582	VJR0582	VJR0582	VJR0582		VJR0582	VJR0582		VJR0582
TP20(VJR0582)	—	—	—	—	—		—	—		—
TP21(VJR0582)	—	—	—	—	—		—	—		—
TP22(VJR0582)	—	—	—	—	—		—	—		—
TP23(VJR0582)	—	—	—	—	—		—	—		—
TP24(VJR0582)	—	—	—	—	—		—	—		—
TP25(VJR0582)	—	—	—	—	—		—	—		—
TP26(VJR0582)	—	—	—	—	—		—	—		—
TP27(VJR0582)	—	—	—	—	—		—	—		—
TP28(VJR0582)	—	—	—	—	—		—	—		—
TP29(VJR0582)	—	—	—	—	—		—	—		—
TP30(VJR0582)	—	—	—	—	—		—	—		—
TP31(VJR0582)	—	—	—	—	—		—	—		—
TP32(VJR0582)	—	—	—	—	—		—	—		—
TP33(VJR0582)	—	—	—	—	—		—	—		—
SW2	VSS0223	VSS0223	—	—	VSS0223		—	—		VSS0223

	LAST NO	NOT USED
SW	7	
IC	75	70
Q	49	23, 24
D	20	14
R	304	78, 80, 89, 90, 91, 92, 98, 99, 293
C	154	54~74 126 139
L	2	
X	1	
J	1	
VC	1	
TP	33	1, 2
TPG	2	
W	24	11, 12, 15, 17
THROU HOLE	126	11, 13, 14, 23, 42, 43, 58, 59, 60, 61, 73, 82, 83, 84, 85, 86 87, 110, 92~103, 112, 113 44, 114, 115, 116

Ref. No. 500~

R	543	500, 501, 503, 534, 535
Q	515	
D	515	
C	508	
IC	503	

TYPE \ MODEL	AU-665	AU-65	AU-63	AU-62
NTSC	VEP86089B	Refer to AU-F65 Section		
PAL	VEP86089F			

B2 (TC & BB) SCHEMATIC DIAGRAM 1/3[FOR AU-665]

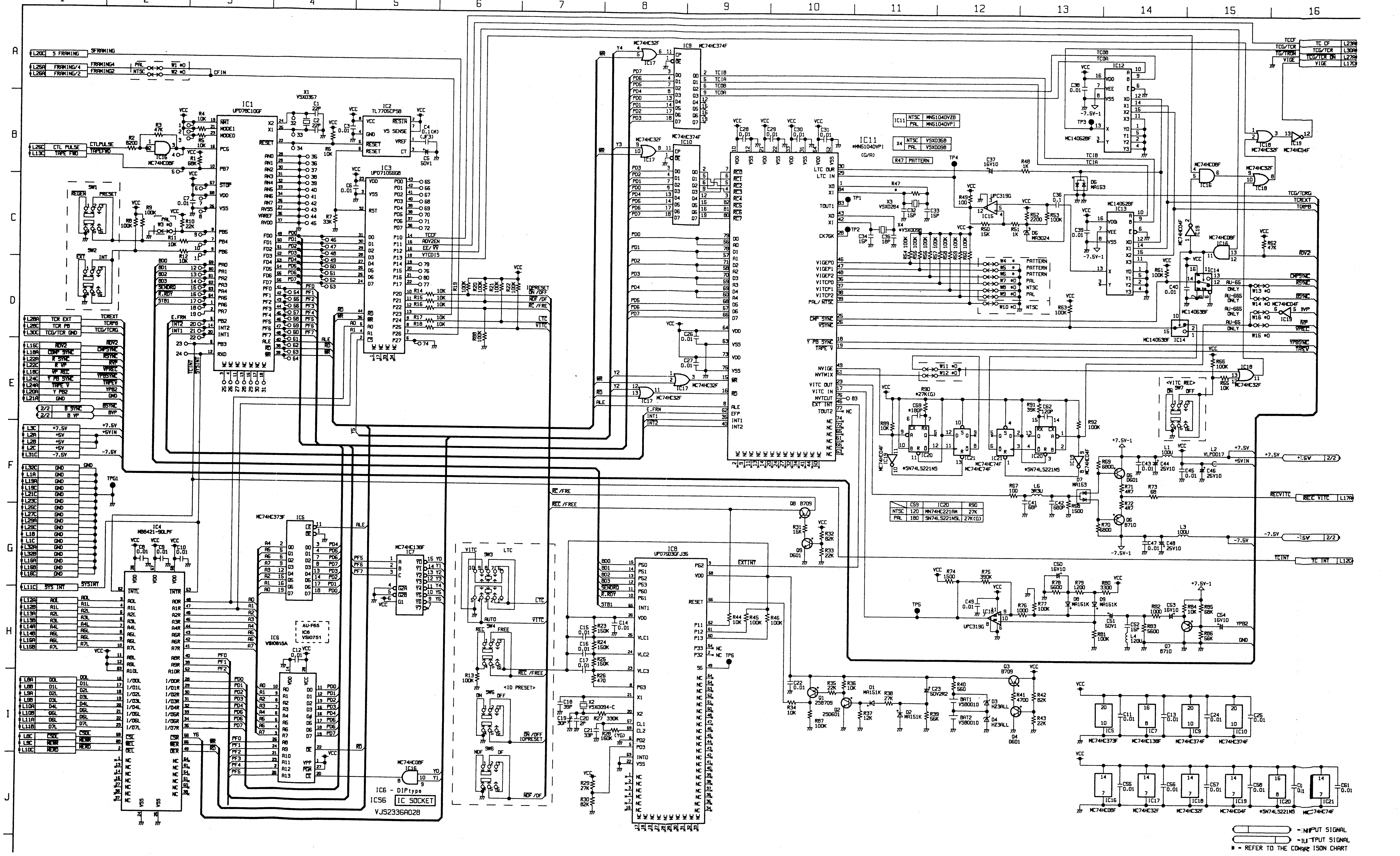
IC1 UPD78C10GF
IC2 TL7705CPSB
IC3 UPD71055GB
IC4 MB8421-90LPF
IC5 MC74HC373F
IC6 VS10815A
AU-F65 IC6 VS10751
IC7 MC74HC138F
IC8 UPD7503GF-J3S
IC9 MC74HC374F
IC10 MC74HC374F
IC11 MN51040VPI
IC12 MC14052BF
IC13 MC14052BF
IC14 MC14053BF
IC15 UPC319G
IC16 MC74HC08F
IC17 MC74HC32F
IC18 MC74HC32F
IC19 MC74HC04F
IC20 SN74LS221NS
IC21 MC74HC74F
X1 VSX0357
X2 VSX0094-C
X3 VSX0284
SW1 REGEN PRESET
SW2 EXT INT
SW3 VITC LTC
SW4 REC FREE
SW5 ON OFF
SW6 NDF DF
SW7 <VITC REC> ON OFF
<ID PRESET>
IC56 IC SOCKET
IC6 - DIPtype
VJS2336A028
TC CF
TCG/TCR
TCG/TCR ON
VIGE
REC VITC
TC INT
+7.5V
-7.5V
+5V
GND
= INPUT SIGNAL
= OUTPUT SIGNAL
* = REFER TO THE COMPARISON CHART

REVERSE SIDE SYSTEM CONTROL
SCHEMATIC DIAGRAM

MODEL TYPE	AU-665	AU-65	AU-63	AU-62
NTSC	VEP86089B	Refer to AU-F65 Section		
PAL	VEP86089F			

B2 (TC & BB) SCHEMATIC DIAGRAM 2/3 [FOR AU-665]

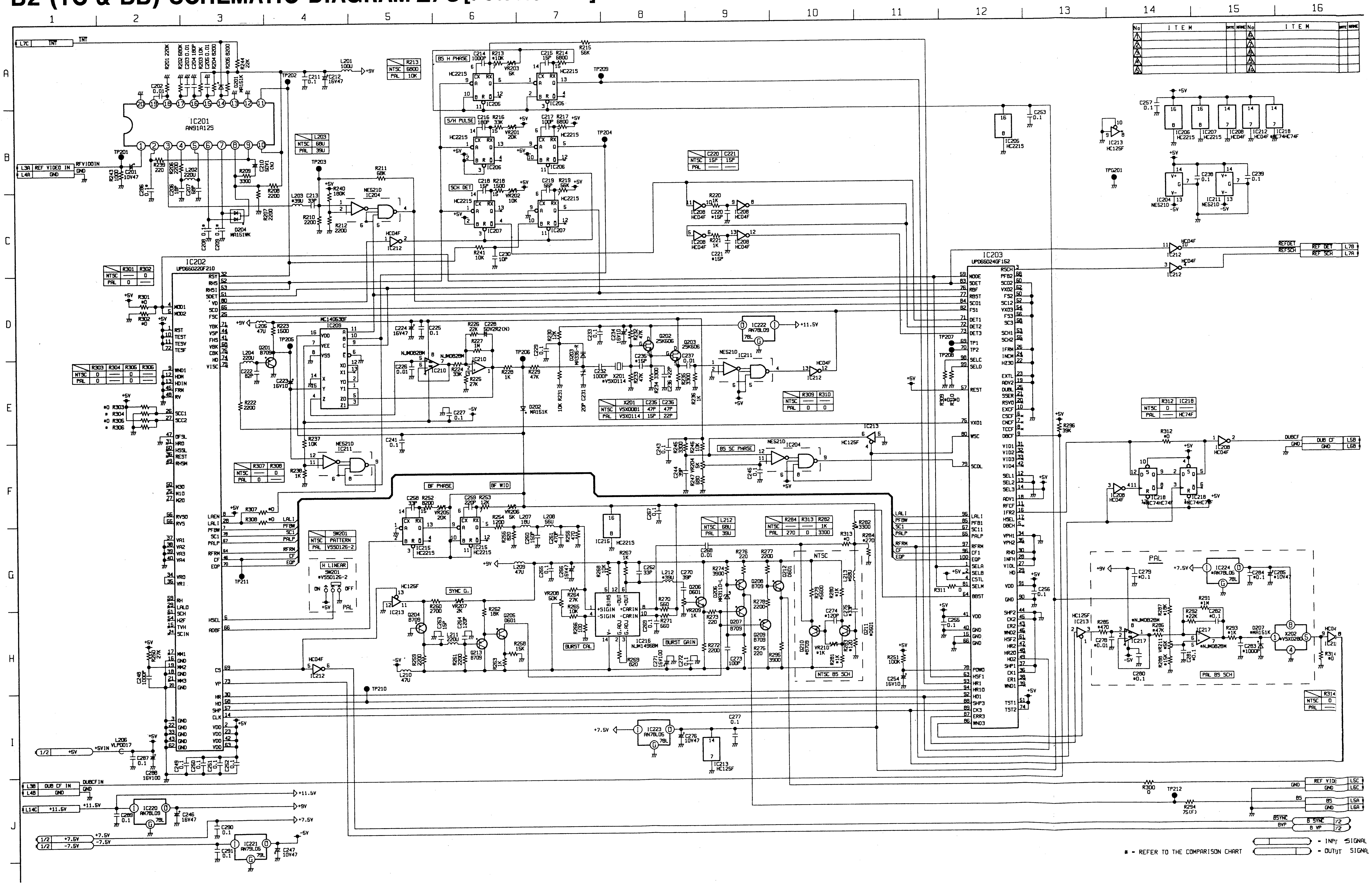
1
2
3
4
5
6
7
8
9
10
11
12
13
14
15
16
A
B
C
D
E
F
G
H
I
J
IC201
AN91A12S
IC202
UPD6602ZGF210
IC203
UPD65024GF1S2
IC209
MC14053BF
IC205
HC2215
IC206
IC207
IC204
NE521D
IC211
IC212
HC04F
IC213
HC125F
IC215
HC221S
IC216
NJM1496BM
IC217
NJM082BM
IC218
HC74HC74F
IC220
AN78L09
IC221
AN79L05
IC222
AN78L09
IC223
AN78L05
IC224
AN78L06
BS H PHASE
S/H PULSE
SCH DET
BS SC PHASE
BF PHASE
BF WID
SYNC G.
BURST CAL
BURST GAIN
H LINEAR
NTSC BS SCH
PAL BS SCH
PAL
NTSC
REF VIDEO IN
DUB CF IN
DUB CF
REF DET
REF SCH
REF VIDE
B SYNC
B VP
+11.5V
+9V
+7.5V
-5V
+5V
TP201
TP202
TP203
TP204
TP205
TP206
TP207
TP208
TP209
TP210
TP211
TP212
TPG201
X201
X202
SW201
I T E M
No

* = REFER TO THE COMPARISON CHART

- INPUT SIGNAL

- OUTPUT SIGNAL

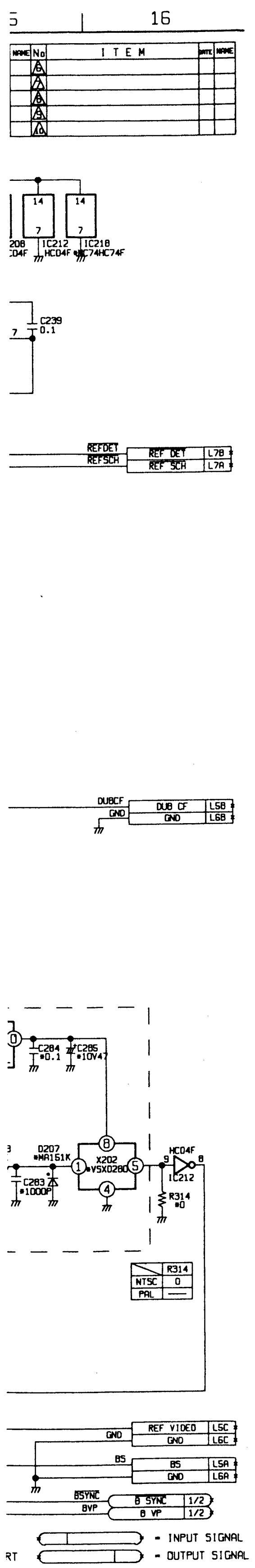
16
I T E M
IC212
IC218
HC04F
74HC74F
C239
0.1
REFDET
REFSCH
REF DET L7B
REF SCH L7A
DUBCF
GND
DUB CF L5B
GND L6B
C284 0.1
C285 10V47
D207 MA151K
X202 VSX0280
HC04F
IC212
R314 0
C283 1000P
R314
NTSC 0
PAL —
GND
REF VIDEO L5C
GND L6C
BS
BS L5A
GND L6A
BSYNC
BVP
B SYNC 1/2
B VP 1/2
= INPUT SIGNAL
= OUTPUT SIGNAL

B2 (TC & BB) SCHEMATIC DIAGRAM 3/3[FOR AU-665]

B2L
VJP2868

B2	TCG/TCR (OPTION)											
L (LEFT)	A				B				C			
1	GND				←				←			
2	+5V				←				←			
3	REF VIDEO IN	CN54-10			DUB CF IN	CN54-11			+7.5V			
4	GND	CN54-9,12			GND	CN54-9,12			+14.5V			
5	BS	CN54-13			DUB CF	CN60-13			REF VIDEO	CN60-14		
6	GND				GND				GND	CN60-15		
7	$\overline{\text{REF SCH}}$	B1-R21B	CN50-10A		$\overline{\text{REF DET}}$	B1-R21A	CN50-11B		$\overline{\text{INT}}$	B1-R25A	CN50-5B	
8	D0L	B1-L5A			D1L	B1-L5B			$\overline{\text{CS DL}}$	B1-L5C		
9	D2L	B1-L6A			D3L	B1-L6B			$\overline{\text{ME WR}}$	B1-L6C		
10	D4L	B1-L7A			D5L	B1-L7B			$\overline{\text{ME RD}}$	B1-L7C		
11	D6L	B1-L8A			D7L	B1-L8B			$\overline{\text{SYS INT}}$	B1-L8C		
12	A0L	B1-L9A			A1L	B1-L9B			$\overline{\text{TC INT}}$	B1-L9C		
13	A2L	B1-L10S			A3L	B1-L10B			$\overline{\text{TAPE FWD}}$	B1-L10C		
14	A4L	B1-L11A			A5L	B1-L11B			+11.5V	B1-L11C		
15	A6L	B1-L12A			A7L	B1-L12B			$\overline{\text{ADV 2}}$	B1-L15A	CN50-4B	
16	GND				GND				GND			
17	$\overline{\text{REC VITC}}$	CN62-1						x	VIGE	CN62-5		
18	$\overline{\text{COMP SYNC}}$	CN62-3						x	$\overline{\text{VP REC}}$	CN62-7		
19	GND	CN62-2,4						x	GND	CN62-6,8		
20	Y PB 2	CN62-9						x	S FRAMING	B1-R6A	CN50-30A	
21	GND	CN62-10						x	GND			
22	$\overline{\text{R SYNC}}$	CN60-1						x	$\overline{\text{RVP}}$	CN60-3	CN50-30A	
23	TC CF	CN60-9						x	GND			
24	$\overline{\text{TAPE V}}$	CN60-7						x	$\overline{\text{Y PB SYNC}}$	CN60-5		
25	FRAMING/4	B1-R6C	CN50-29A					x	GND			
26	FRAMING/2	B1-R6B	CN50-30B					x	CTL PULSE	B1-R3C	CN50-31A	CN53-1B
27	$\overline{\text{TCG/TCR ON}}$	CN50-32A						x	GND			
28	TCR EXT	CN61-1						x	TCR PB	CN61-3		
29	GND							x	GND			
30	TCG/TCR	CN61-4						x	TCG/TCR GND	CN61-2,5		
31				x				x	-7.5V			
32	GND				←				←			

TYPE \ MODEL	AU-665	AU-65	AU-63	AU-62
NTSC	VEP85018A	Not Used	Not Used	Not Used
PAL	VEP85018B	Not Used	Not Used	Not Used

A.T H.A SCHEMATIC DIAGRAM[FOR AU-665]

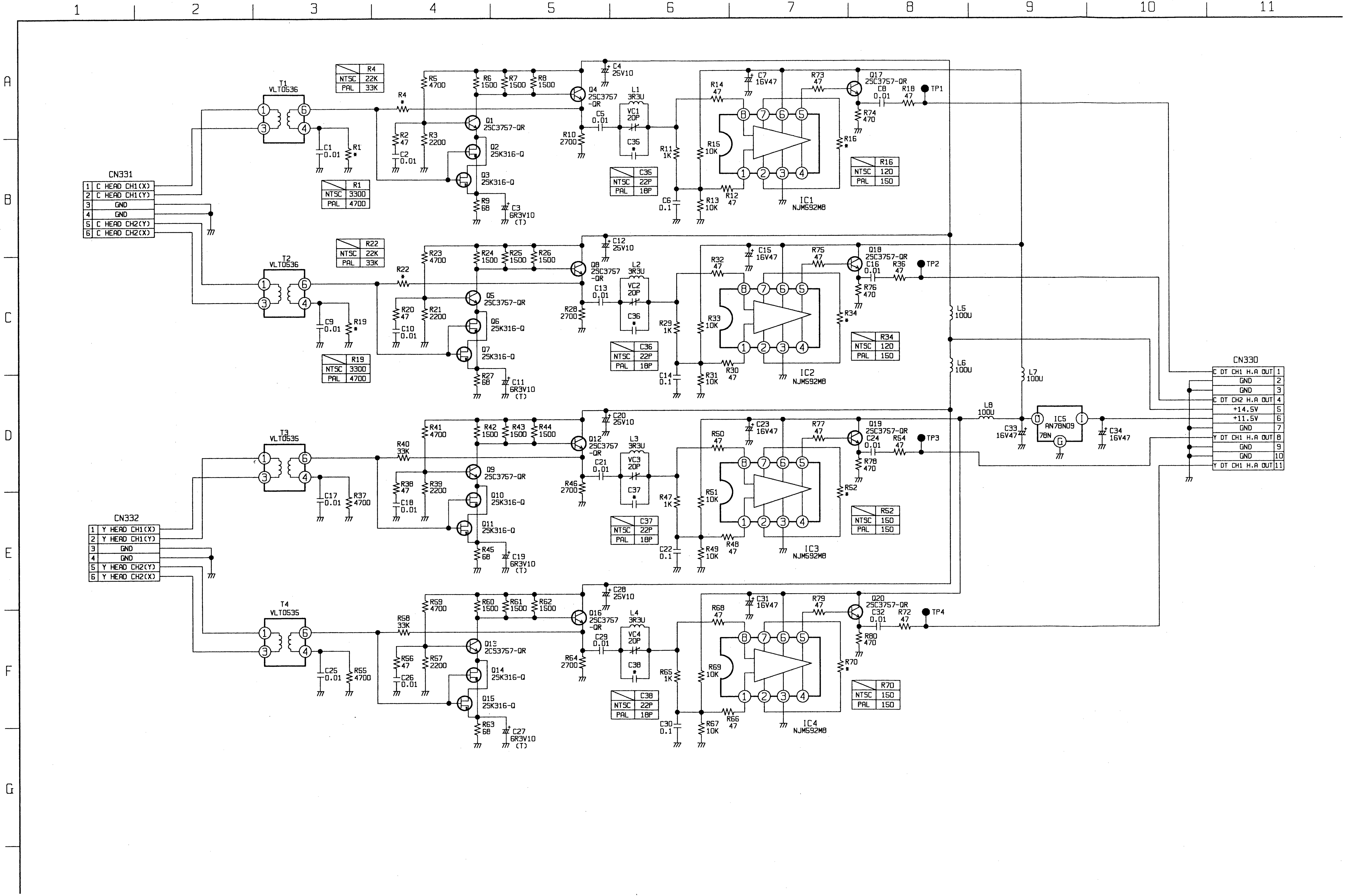
1
2
3
4
5
6
7
8
9
10
11
A
B
C
D
E
F
G
CN331
1 C HEAD CH1(X)
2 C HEAD CH1(Y)
3 GND
4 GND
5 C HEAD CH2(Y)
6 C HEAD CH2(X)
CN332
1 Y HEAD CH1(X)
2 Y HEAD CH1(Y)
3 GND
4 GND
5 Y HEAD CH2(Y)
6 Y HEAD CH2(X)
T1 VLT0536
T2 VLT0536
T3 VLT0535
T4 VLT0535
R4: NTSC 22K, PAL 33K
R22: NTSC 22K, PAL 33K
R1: NTSC 3300, PAL 4700
R19: NTSC 3300, PAL 4700
C35: NTSC 22P, PAL 18P
C36: NTSC 22P, PAL 18P
C37: NTSC 22P, PAL 18P
C38: NTSC 22P, PAL 18P
R16: NTSC 120, PAL 150
R34: NTSC 120, PAL 150
R52: NTSC 150, PAL 150
R70: NTSC 150, PAL 150
Q1 2SC3757-QR
Q2 2SK316-Q
Q3 2SK316-Q
Q4 2SC3757-QR
Q5 2SC3757-QR
Q6 2SK316-Q
Q7 2SK316-Q
Q8 2SC3757-QR
Q9 2SC3757-QR
Q10 2SK316-Q
Q11 2SK316-Q
Q12 2SC3757-QR
Q13 2SC3757-QR
Q14 2SK316-Q
Q15 2SK316-Q
Q16 2SC3757-QR
Q17 2SC3757-QR
Q18 2SC3757-QR
Q19 2SC3757-QR
Q20 2SC3757-QR
IC1 NJM592M8
IC2 NJM592M8
IC3 NJM592M8
IC4 NJM592M8
IC5 AN78N09
L1 3R3U
L2 3R3U
L3 3R3U
L4 3R3U
L5 100U
L6 100U
L7 100U
L8 100U
VC1 20P
VC2 20P
VC3 20P
VC4 20P
C4 25V10
C12 25V10
C20 25V10
C28 25V10
C7 16V47
C15 16V47
C23 16V47
C31 16V47
C33 16V47
C34 16V47
C3 6R3V10 (T)
C11 6R3V10 (T)
C19 6R3V10 (T)
C27 6R3V10 (T)
R5 4700
R6 1500
R7 1500
R8 1500
R2 47
R3 2200
C2 0.01
C1 0.01
R9 68
C5 0.01
R10 2700
R11 1K
R15 10K
R13 10K
R12 47
C6 0.1
R14 47
R73 47
C8 0.01
R18 47
R74 470
TP1
TP2
TP3
TP4
R40 33K
R58 33K
R37 4700
R55 4700
R41 4700
R59 4700
R23 4700
R45 68
R63 68
R27 68
R64 2700
R46 2700
R28 2700
CN330
1 C DT CH1 H.A OUT
2 GND
3 GND
4 C DT CH2 H.A OUT
5 +14.5V
6 +11.5V
7 GND
8 Y DT CH1 H.A OUT
9 GND
10 GND
11 Y DT CH1 H.A OUT

REVERSE SIDE **TC & BB SCHEMATIC DIAGRAM**

MODEL TYPE	AU-665	AU-65	AU-63	AU-62
NTSC	VEP82062A	Not Used	VEP82062A	Not Used
PAL	VEP82062A	Not Used	VEP82062A	Not Used

AT POWER SCHEMATIC DIAGRAM[FOR AU-665,AU-63]

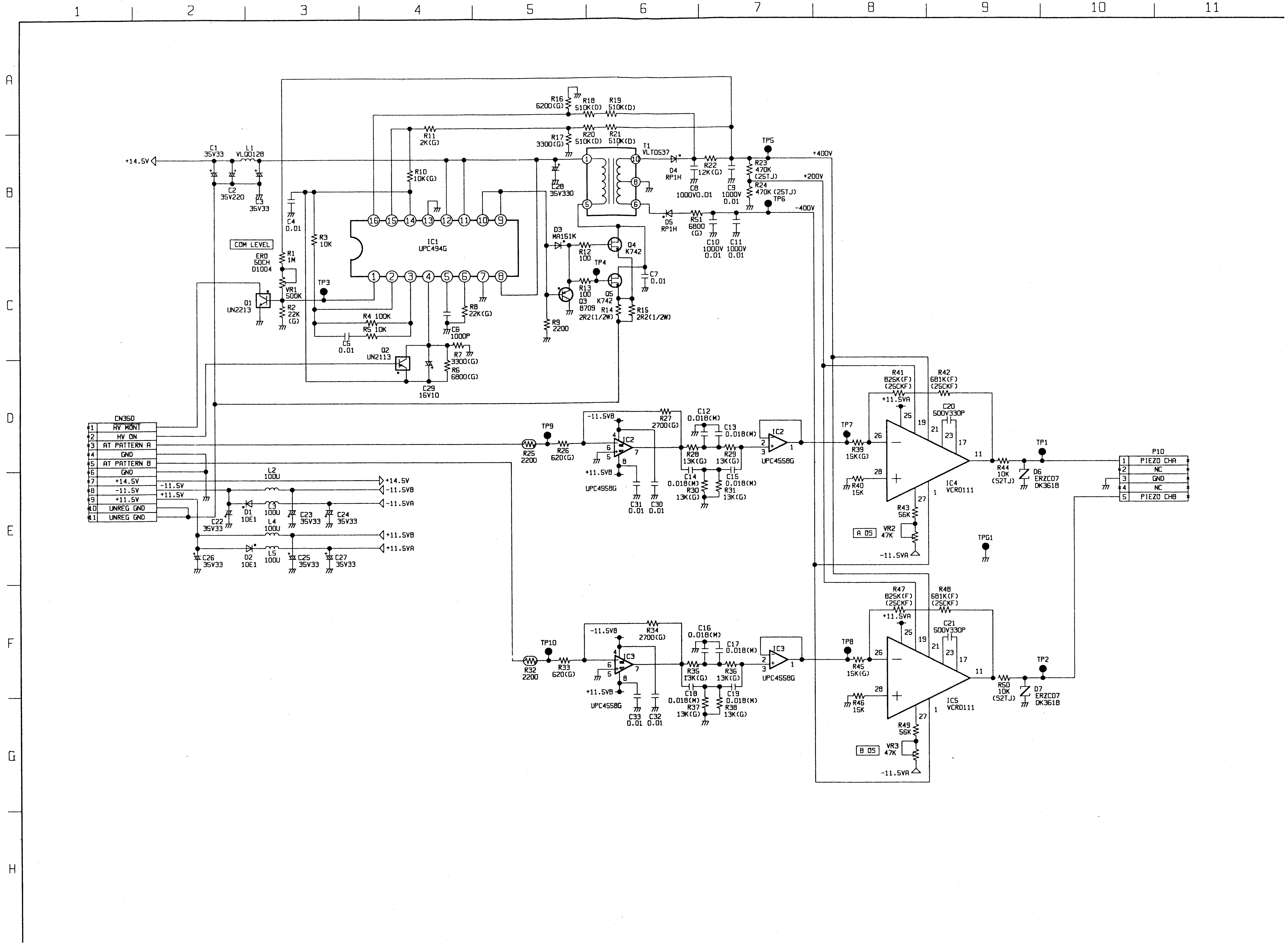
1
2
3
4
5
6
7
8
9
10
11
A
B
C
D
E
F
G
H
+14.5V
C1 35V33
L1 VLQ0128
C2 35V220
C3 35V33
C4 0.01
R3 10K
COM LEVEL
ER0 50CH D1004
R1 1M
VR1 500K
R2 22K (G)
TP3
Q1 UN2213
IC1 UPC494G
R4 100K
R5 10K
C5 0.01
C6 1000P
R8 22K(G)
Q2 UN2113
R7 3300(G)
R6 6800(G)
C29 16V10
R10 10K(G)
R11 2K(G)
R16 6200(G)
R18 510K(D)
R19 510K(D)
R17 3300(G)
R20 510K(D)
R21 510K(D)
T1 VLT0537
C28 35V330
D3 MA151K
R12 100
Q4 K742
TP4
R13 100
Q3 B709
Q5 K742
R14 2R2(1/2W)
R15 2R2(1/2W)
C7 0.01
R9 2200
D4 RP1H
R22 12K(G)
C8 1000V0.01
C9 1000V 0.01
TP5
R23 470K (25TJ)
R24 470K (25TJ)
TP6
+400V
+200V
-400V
D5 RP1H
R51 6800 (G)
C10 1000V 0.01
C11 1000V 0.01
CN350
1 HV MONT
2 HV ON
3 AT PATTERN A
4 GND
5 AT PATTERN B
6 GND
7 +14.5V
8 -11.5V
9 +11.5V
10 UNREG GND
11 UNREG GND
-11.5V
+11.5V
L2 100U
+14.5V
-11.5VB
-11.5VA
D1 10E1
L3 100U
L4 100U
C22 35V33
C23 35V33
C24 35V33
+11.5VB
+11.5VA
C26 35V33
D2 10E1
L5 100U
C25 35V33
C27 35V33
TP9
R25 2200
R26 620(G)
-11.5VB
IC2
R27 2700(G)
+11.5VB
UPC4558G
C31 0.01
C30 0.01
C12 0.018(M)
C13 0.018(M)
R28 13K(G)
R29 13K(G)
C14 0.018(M)
C15 0.018(M)
R30 13K(G)
R31 13K(G)
UPC4558G
TP7
R39 15K(G)
R40 15K
R41 825K(F) (25CKF)
R42 681K(F) (25CKF)
+11.5VA
C20 500V330P
IC4 VCR0111
R43 56K
A 0S
VR2 47K
-11.5VA
R44 10K (52TJ)
D6 ERZC07 DK361B
TP1
TPG1
P10
1 PIEZO CHA
2 NC
3 GND
4 NC
5 PIEZO CHB
TP10
R32 2200
R33 620(G)
IC3
R34 2700(G)
C33 0.01
C32 0.01
C16 0.018(M)
C17 0.018(M)
R35 13K(G)
R36 13K(G)
C18 0.018(M)
C19 0.018(M)
R37 13K(G)
R38 13K(G)
TP8
R45 15K(G)
R46 15K
R47 825K(F) (25CKF)
R48 681K(F) (25CKF)
C21 500V330P
IC5 VCR0111
R49 56K
B 0S
VR3 47K
R50 10K (52TJ)
D7 ERZC07 DK361B
TP2

MODEL / TYPE	AU-665	AU-65	AU-63	AU-62
NTSC	VEP84094B	VEP84094A	VEP84094C	VEP84094C
PAL	VEP84094D	VEP84094A	VEP84094C	VEP84094C

AUDIO I/O SCHEMATIC DIAGRAM 1/2

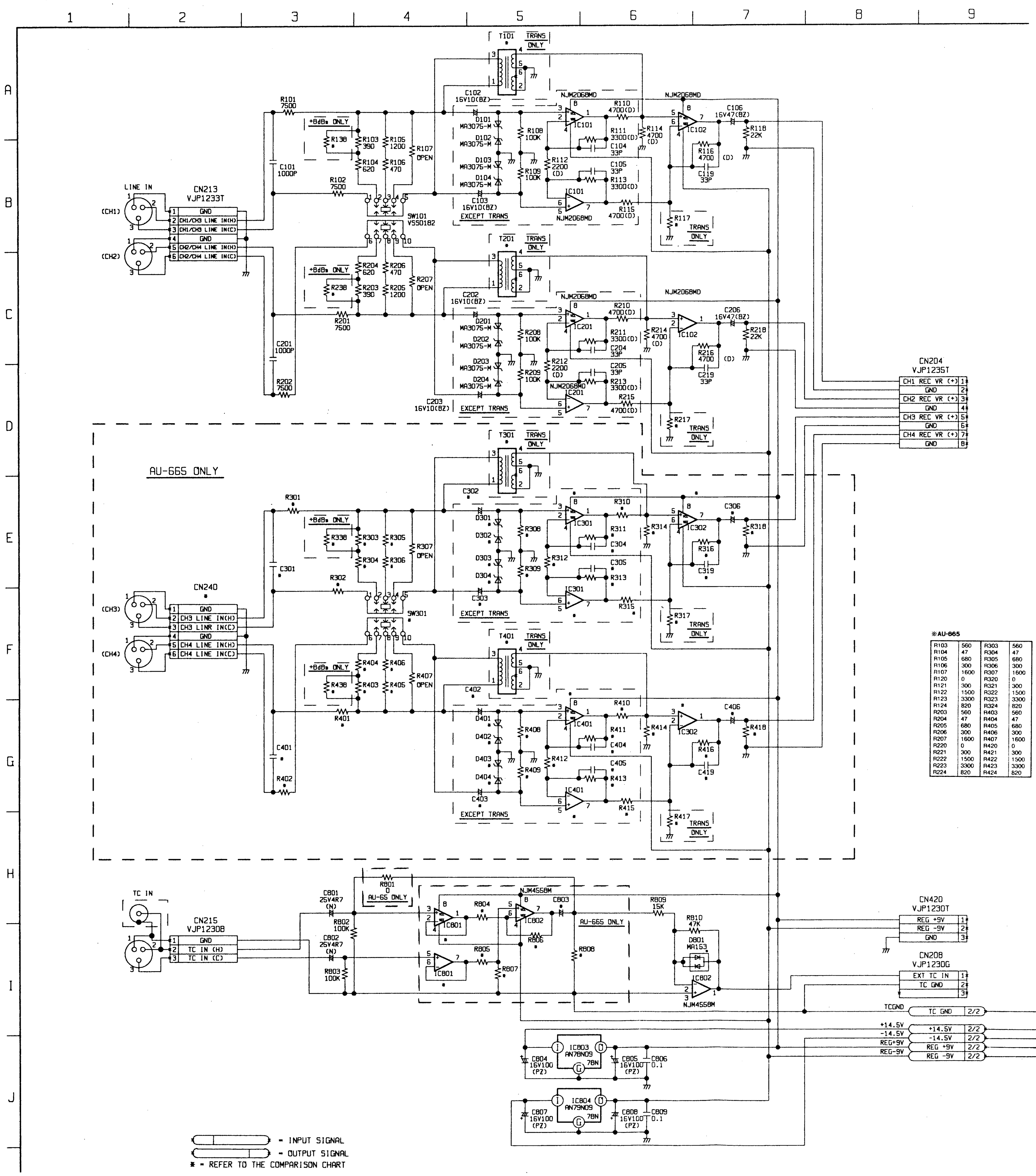
1
2
3
4
5
6
7
8
9
A
B
C
D
E
F
G
H
I
J
LINE IN
(CH1)
(CH2)
CN213
VJP1233T
GND
CH1/CH3 LINE IN(H)
CH1/CH3 LINE IN(C)
GND
CH2/CH4 LINE IN(H)
CH2/CH4 LINE IN(C)
T101 TRANS ONLY
+8dBm ONLY
R101 7500
C101 1000P
R102 7500
SW101 VSS0182
C102 16V10(BZ)
D101 MA3075-M
NJM2068MD
IC101
IC102
C106 16V47(BZ)
R118 22K
C103 16V10(BZ)
EXCEPT TRANS
R117 TRANS ONLY
T201 TRANS ONLY
C201 1000P
R202 7500
IC201
C206 16V47(BZ)
R218 22K
C203 16V10(BZ)
CN204
VJP1235T
CH1 REC VR (+)
GND
CH2 REC VR (+)
GND
CH3 REC VR (+)
GND
CH4 REC VR (+)
GND
AU-665 ONLY
T301 TRANS ONLY
CN240
(CH3)
(CH4)
CH3 LINE IN(H)
CH3 LINR IN(C)
CH4 LINE IN(H)
CH4 LINE IN(C)
SW301
IC301
IC302
T401 TRANS ONLY
IC401
TC IN
CN215
VJP1230B
GND
TC IN (H)
TC IN (C)
C801 25V4R7 (N)
R802 100K
C802 25V4R7 (N)
R803 100K
R801 0
AU-65 ONLY
NJM4558M
IC801
IC802
AU-665 ONLY
R809 15K
R810 47K
D801 MA153
CN420
VJP1230T
REG +9V
REG -9V
GND
CN208
VJP1230G
EXT TC IN
TC GND
TCGND
TC GND
+14.5V
-14.5V
REG+9V
REG-9V
REG +9V
REG -9V
2/2
IC803 AN78N09
IC804 AN79N09
C804 16V100 (PZ)
C805 16V100 (PZ)
C806 0.1
C807 16V100 (PZ)
C808 16V100 (PZ)
C809 0.1

※AU-665

R103	560	R303	560
R104	47	R304	47
R105	680	R305	680
R106	300	R306	300
R107	1600	R307	1600
R120	0	R320	0
R121	300	R321	300
R122	1500	R322	1500
R123	3300	R323	3300
R124	820	R324	820
R203	560	R403	560
R204	47	R404	47
R205	680	R405	680
R206	300	R406	300
R207	1600	R407	1600
R220	0	R420	0
R221	300	R421	300
R222	1500	R422	1500
R223	3300	R423	3300
R224	820	R424	820

- INPUT SIGNAL

- OUTPUT SIGNAL

※ - REFER TO THE COMPARISON CHART

AUDIO I/O SCHEMATIC DIAGRA

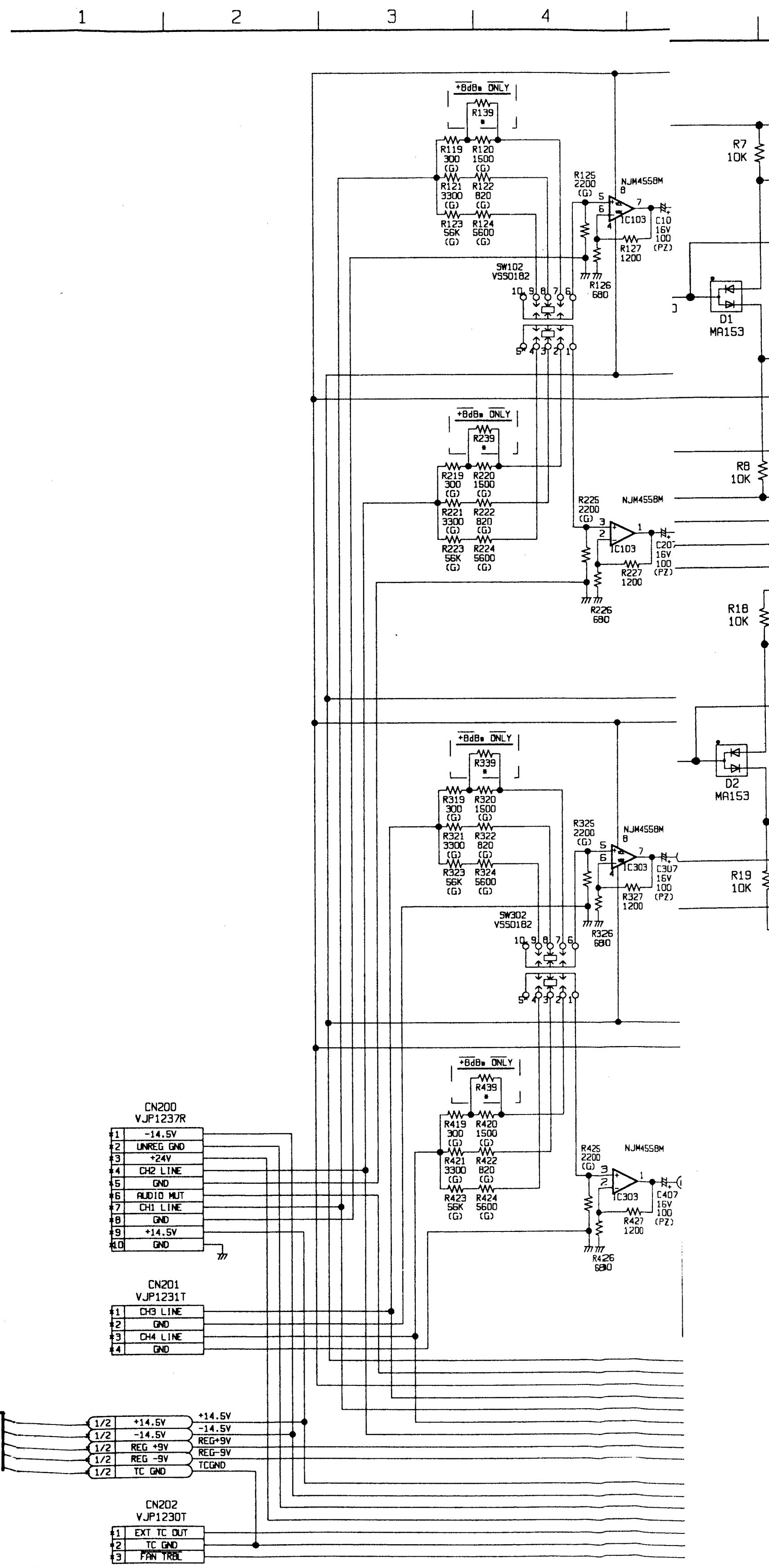
ATIC
1
2
3
4
+8dBm ONLY
R139
NJM4558M
IC103
SW102 VSS0182
R7 10K
D1 MA153
R8 10K
R18 10K
D2 MA153
SW302 VSS0182
IC303
R19 10K
CN200
VJP1237R
-14.5V
UNREG GND
+24V
CH2 LINE
GND
AUDIO MUT
CH1 LINE
GND
+14.5V
GND
CN201
VJP1231T
CH3 LINE
GND
CH4 LINE
GND
1/2
+14.5V
-14.5V
REG +9V
REG -9V
TC GND
REG+9V
REG-9V
TCGND
CN202
VJP1230T
EXT TC OUT
TC GND
FAN TRBL

C DIAGRAM 2/2

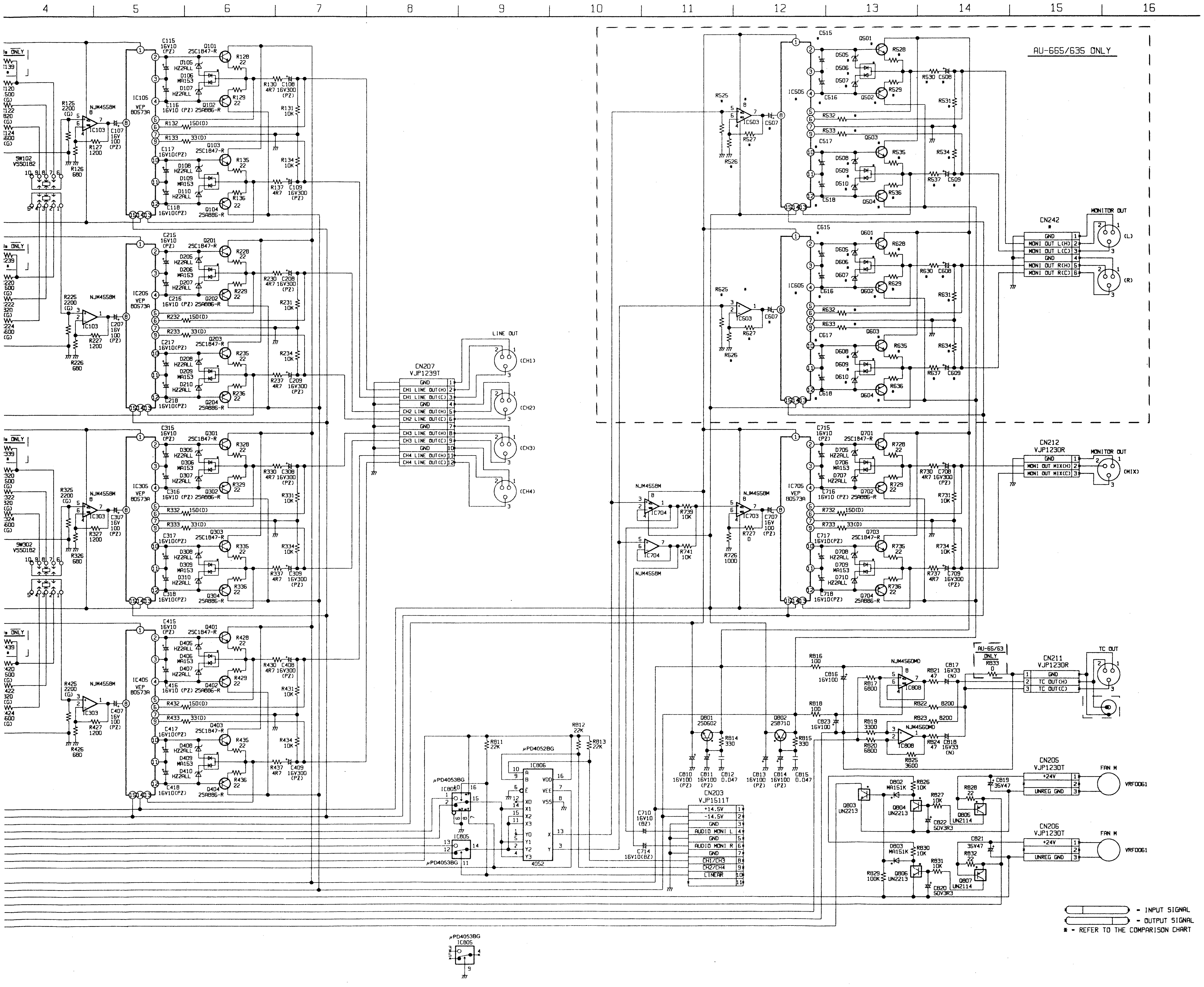

4
5
6
7
8
9
10
11
12
13
14
15
16
AU-665/635 ONLY
IC105 VEP 80573A
IC205 VEP 80573A
IC305 VEP 80573A
IC405 VEP 80573A
IC505
IC605
IC705 VEP 80573A
NJM4558M
IC103
IC303
IC503
IC703
IC704
SW102 VSS0182
SW302 VSS0182
CN207 VJP1239T
GND
CH1 LINE OUT(H)
CH1 LINE OUT(C)
CH2 LINE OUT(H)
CH2 LINE OUT(C)
CH3 LINE OUT(H)
CH3 LINE OUT(C)
CH4 LINE OUT(H)
CH4 LINE OUT(C)
LINE OUT
(CH1)
(CH2)
(CH3)
(CH4)
CN242
MONI OUT L(H)
MONI OUT L(C)
MONI OUT R(H)
MONI OUT R(C)
MONITOR OUT
(L)
(R)
CN212 VJP1230R
MONI OUT MIX(H)
MONI OUT MIX(C)
(MIX)
CN211 VJP1230R
TC OUT(H)
TC OUT(C)
TC OUT
AU-65/63 ONLY
NJM4560MD
IC808
CN203 VJP1511T
+14.5V
-14.5V
AUDIO MONI L
AUDIO MONI R
CH1/CH3
CH2/CH4
LINEAR
μPD4053BG
IC805
μPD4052BG
IC806
4052
CN205 VJP1230T
+24V
UNREG GND
FAN M
VRF0061
CN206 VJP1230T
Q801 2SD602
Q802 2SB710
Q803 UN2213
Q804 UN2213
Q805 UN2114
Q806 UN2213
Q807 UN2114
= INPUT SIGNAL
= OUTPUT SIGNAL
* = REFER TO THE COMPARISON CHART

AUDIO I/O (SUB) SCHEMATI

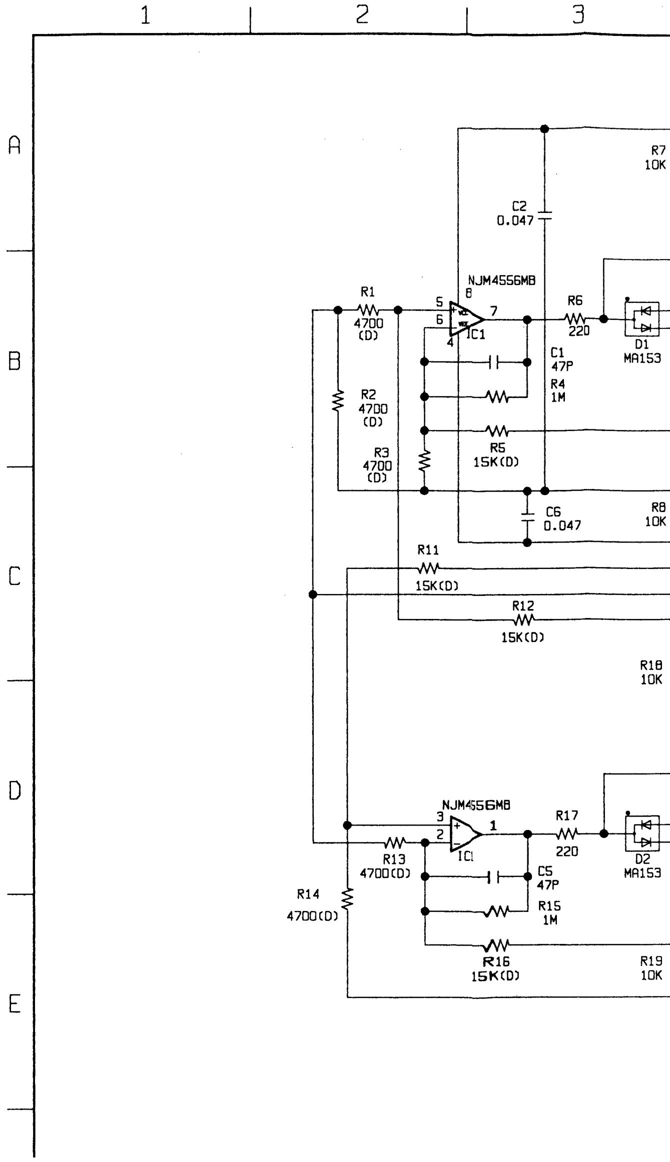

1
2
3
A
B
C
D
E
NJM4556MB
IC1
R1 4700 (D)
R2 4700 (D)
R3 4700 (D)
R4 1M
R5 15K(D)
R6 220
C1 47P
C2 0.047
C5 47P
C6 0.047
D1 MA153
D2 MA153
R11 15K(D)
R12 15K(D)
R13 4700(D)
R14 4700(D)
R15 1M
R16 15K(D)
R17 220

MODEL TYPE	AU-665	AU-65	AU-63	AU-62
NTSC	VEP80573A	VEP80573A	VEP80573A	VEP80573A
PAL	VEP80573A	VEP80573A	VEP80573A	VEP80573A

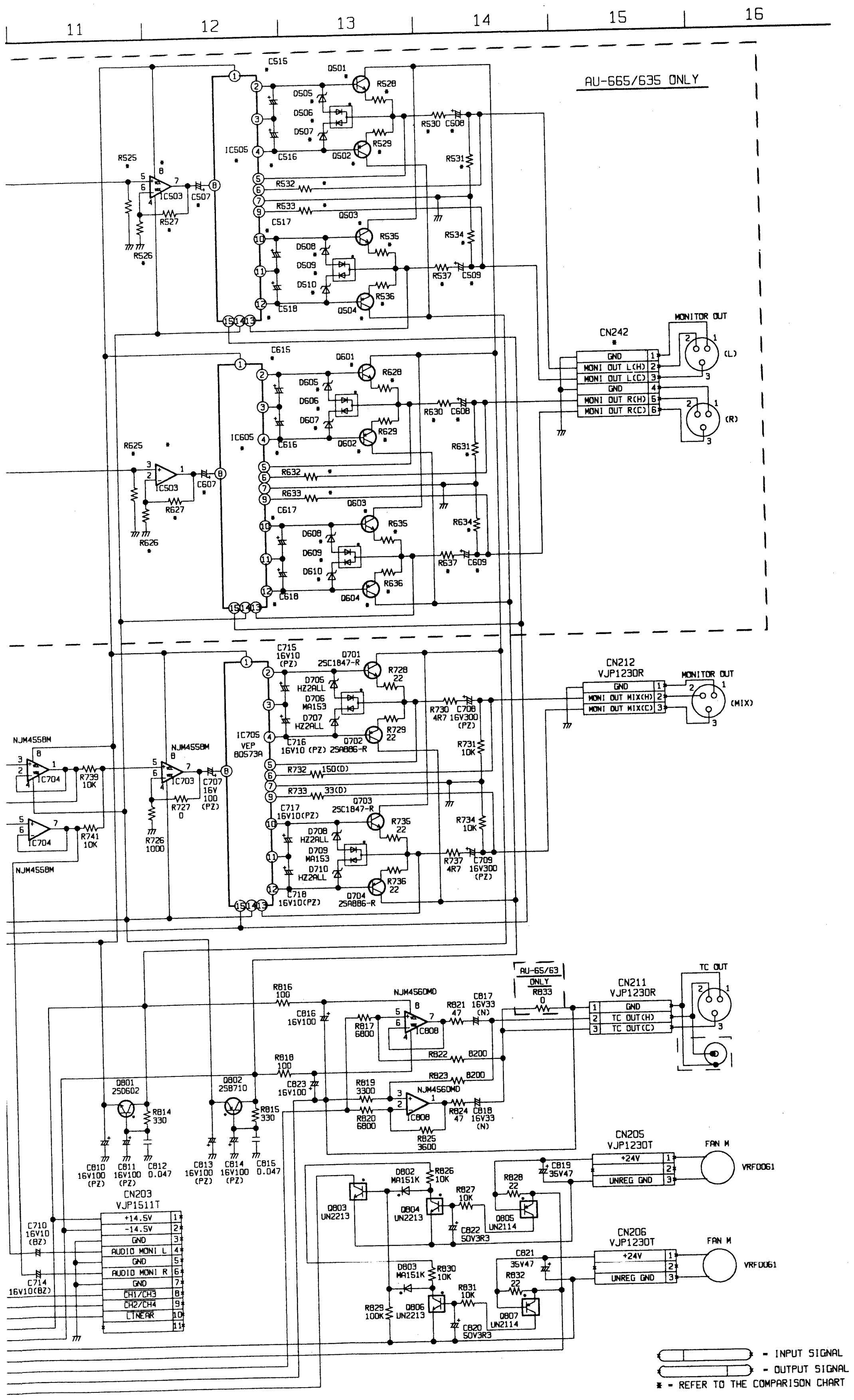
11
12
13
14
15
16
AU-665/635 ONLY
IC505
IC503
IC605
IC705 VEP 80573A
IC703
IC704
NJM4558M
CN242
GND
MONI OUT L(H)
MONI OUT L(C)
GND
MONI OUT R(H)
MONI OUT R(C)
MONITOR OUT
(L)
(R)
CN212 VJP1230R
MONI OUT MIX(H)
MONI OUT MIX(C)
MONITOR OUT
(MIX)
Q801 2SD602
Q802 2SB710
NJM4560MD
IC808
AU-65/63 ONLY
CN211 VJP1230R
GND
TC OUT(H)
TC OUT(C)
TC OUT
CN203 VJP1511T
+14.5V
-14.5V
GND
AUDIO MONI L
GND
AUDIO MONI R
GND
CH1/CH3
CH2/CH4
LINEAR
CN205 VJP1230T
+24V
UNREG GND
FAN M
VRF0061
CN206 VJP1230T
+24V
UNREG GND
FAN M
VRF0061
= INPUT SIGNAL
= OUTPUT SIGNAL
* = REFER TO THE COMPARISON CHART

AUDIO I/O (SUB) SCHEMATIC DIAGRAM

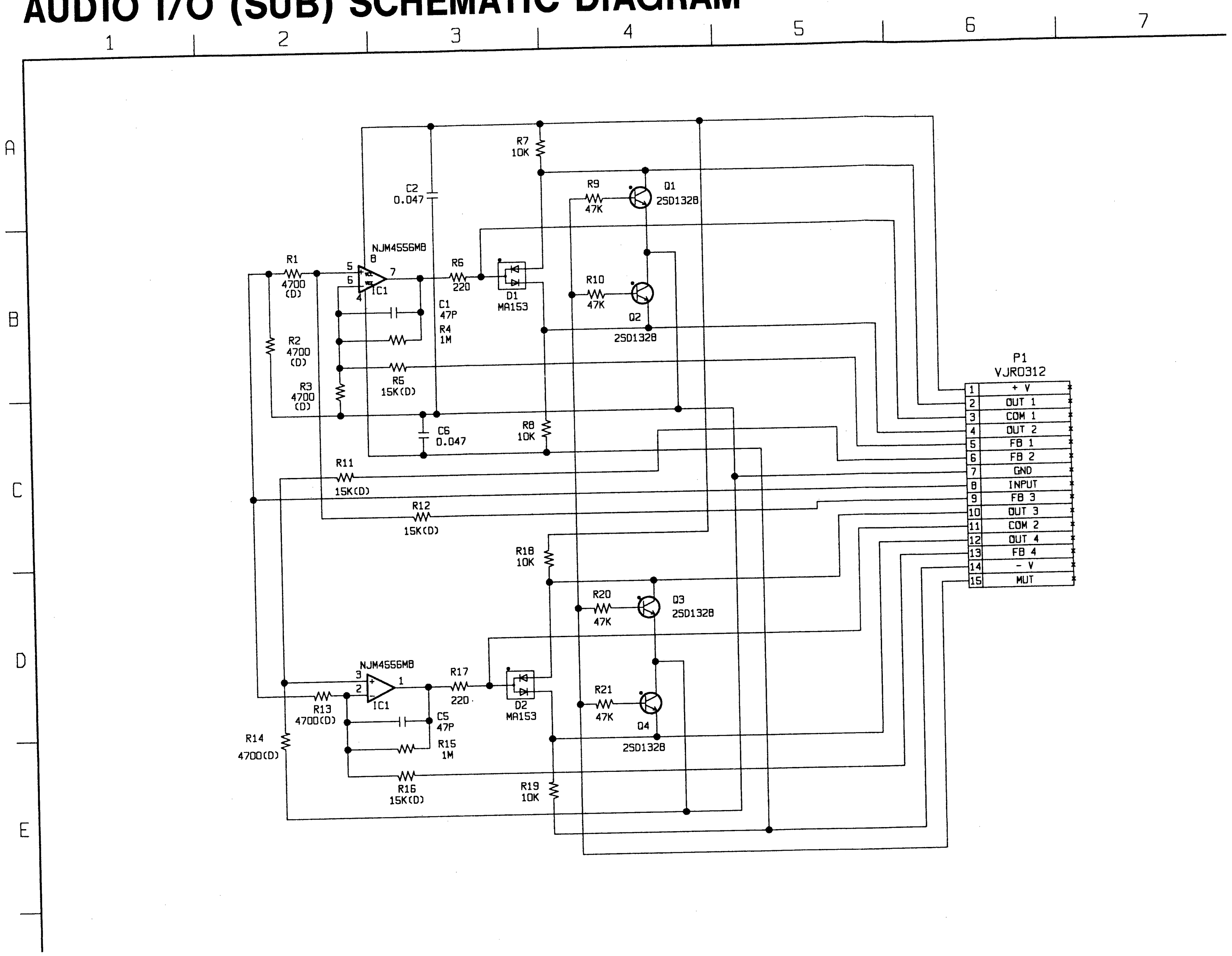
1
2
3
4
5
6
7
A
B
C
D
E
NJM4556MB
IC1
R1 4700 (D)
R2 4700 (D)
R3 4700 (D)
C2 0.047
R7 10K
R9 47K
Q1 2SD1328
R6 220
D1 MA153
C1 47P
R4 1M
R5 15K(D)
R10 47K
Q2 2SD1328
C6 0.047
R8 10K
R11 15K(D)
R12 15K(D)
R18 10K
R20 47K
Q3 2SD1328
R17 220
D2 MA153
R13 4700(D)
R14 4700(D)
C5 47P
R15 1M
R16 15K(D)
R21 47K
Q4 2SD1328
R19 10K
P1 VJR0312
1 + V
2 OUT 1
3 COM 1
4 OUT 2
5 FB 1
6 FB 2
7 GND
8 INPUT
9 FB 3
10 OUT 3
11 COM 2
12 OUT 4
13 FB 4
14 - V
15 MUT

REVERSE SIDE AUDIO VR
SCHEMATIC DIAGRA

TYPE \ MODEL	AU-665	AU-65	AU-63	AU-62
NTSC	VEP84103B	Not Used	Not Used	Not Used
PAL	VEP84103A	Not Used	Not Used	Not Used

AUDIO INPUT SW SCHEMATIC DIAGRAM[FOR AU-665]

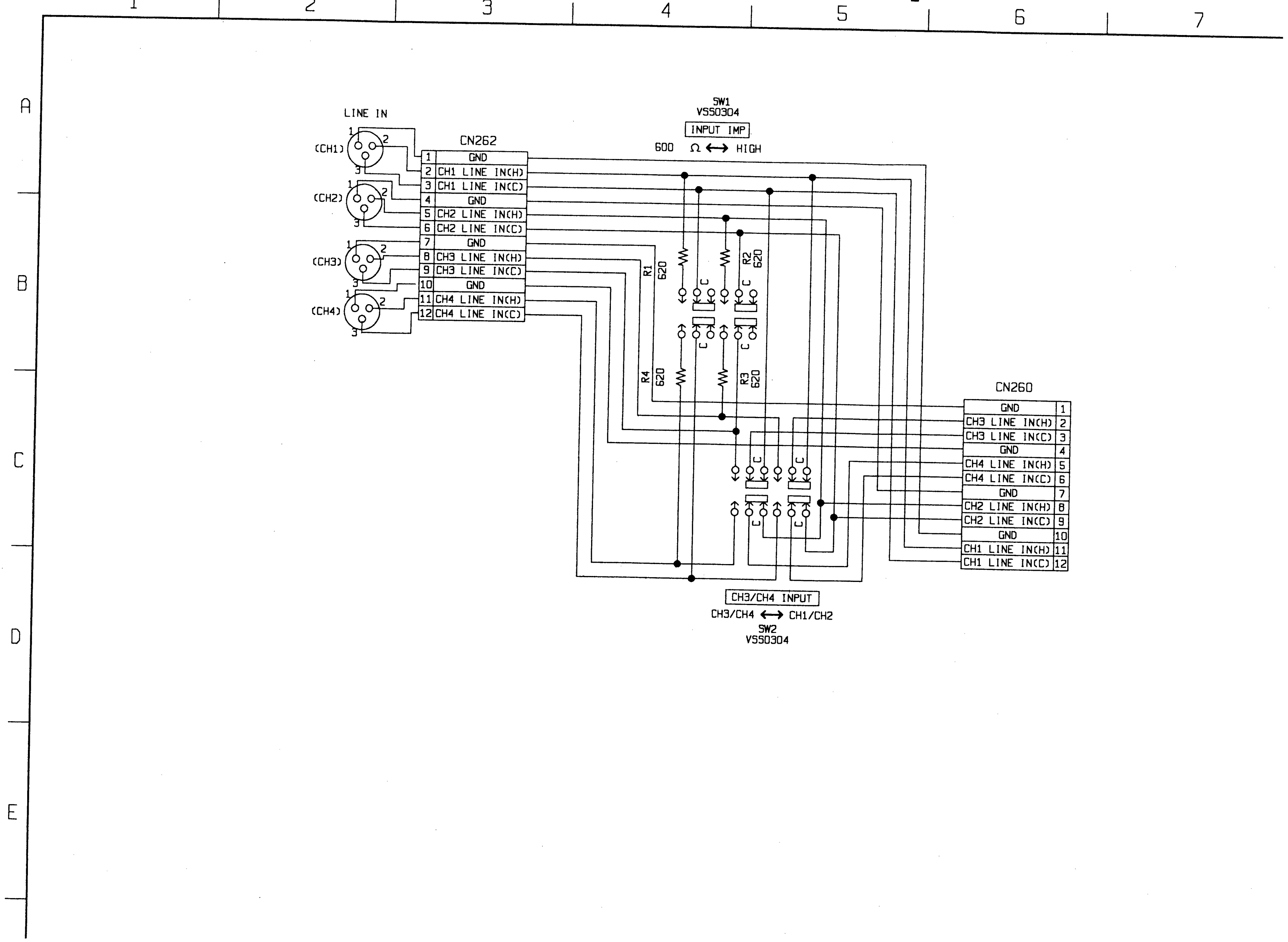
1
2
3
4
5
6
7
A
B
C
D
E
LINE IN
(CH1)
(CH2)
(CH3)
(CH4)
CN262
1 GND
2 CH1 LINE IN(H)
3 CH1 LINE IN(C)
4 GND
5 CH2 LINE IN(H)
6 CH2 LINE IN(C)
7 GND
8 CH3 LINE IN(H)
9 CH3 LINE IN(C)
10 GND
11 CH4 LINE IN(H)
12 CH4 LINE IN(C)
SW1
VSS0304
INPUT IMP
600 Ω ⟷ HIGH
R1 620
R2 620
R3 620
R4 620
CN260
GND 1
CH3 LINE IN(H) 2
CH3 LINE IN(C) 3
GND 4
CH4 LINE IN(H) 5
CH4 LINE IN(C) 6
GND 7
CH2 LINE IN(H) 8
CH2 LINE IN(C) 9
GND 10
CH1 LINE IN(H) 11
CH1 LINE IN(C) 12
CH3/CH4 INPUT
CH3/CH4 ⟷ CH1/CH2
SW2
VSS0304

AUDIO VR SCHEMATIC DIAGRAM[FOR AU-66

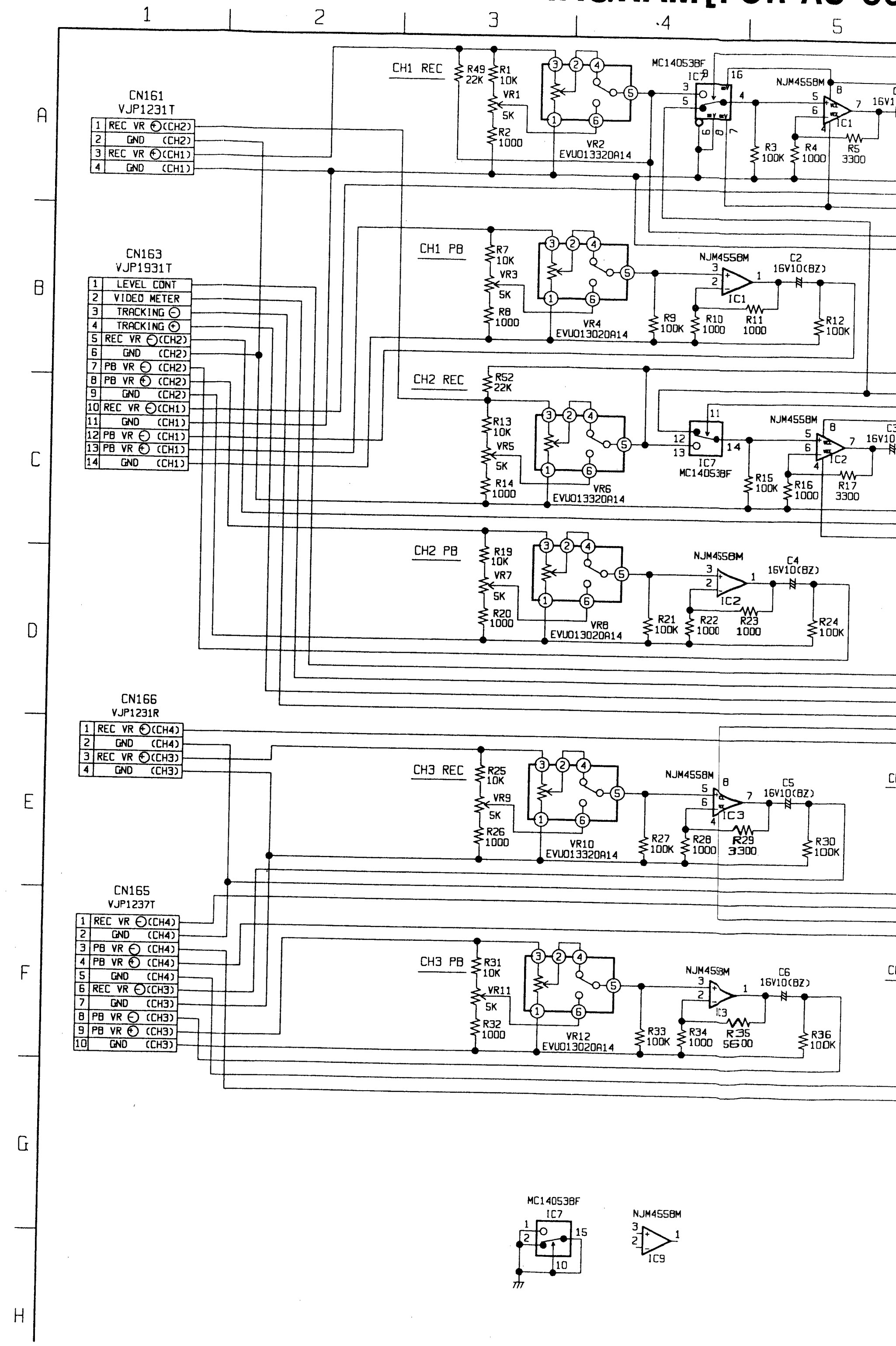
1
2
3
4
5
A
B
C
D
E
F
G
H
CN161
VJP1231T
1 REC VR ⊕(CH2)
2 GND (CH2)
3 REC VR ⊕(CH1)
4 GND (CH1)
CN163
VJP1931T
1 LEVEL CONT
2 VIDEO METER
3 TRACKING ⊖
4 TRACKING ⊕
5 REC VR ⊖(CH2)
6 GND (CH2)
7 PB VR ⊖ (CH2)
8 PB VR ⊕ (CH2)
9 GND (CH2)
10 REC VR ⊖(CH1)
11 GND (CH1)
12 PB VR ⊖ (CH1)
13 PB VR ⊕ (CH1)
14 GND (CH1)
CN166
VJP1231R
1 REC VR ⊕(CH4)
2 GND (CH4)
3 REC VR ⊕(CH3)
4 GND (CH3)
CN165
VJP1237T
1 REC VR ⊖(CH4)
2 GND (CH4)
3 PB VR ⊖ (CH4)
4 PB VR ⊕ (CH4)
5 GND (CH4)
6 REC VR ⊖(CH3)
7 GND (CH3)
8 PB VR ⊖ (CH3)
9 PB VR ⊕ (CH3)
10 GND (CH3)
CH1 REC
R49 22K
R1 10K
VR1 5K
R2 1000
VR2 EVU01332OA14
MC14053BF
IC7
NJM4558M
IC1
R3 100K
R4 1000
R5 3300
16V1
CH1 PB
R7 10K
VR3 5K
R8 1000
VR4 EVU01302OA14
R9 100K
R10 1000
R11 1000
C2 16V10(BZ)
R12 100K
CH2 REC
R52 22K
R13 10K
VR5 5K
R14 1000
VR6 EVU01332OA14
IC7 MC14053BF
R15 100K
R16 1000
R17 3300
IC2
16V10
CH2 PB
R19 10K
VR7 5K
R20 1000
VR8 EVU01302OA14
R21 100K
R22 1000
R23 1000
C4 16V10(BZ)
R24 100K
CH3 REC
R25 10K
VR9 5K
R26 1000
VR10 EVU01332OA14
IC3
R27 100K
R28 1000
R29 3300
C5 16V10(BZ)
R30 100K
CH3 PB
R31 10K
VR11 5K
R32 1000
VR12 EVU01302OA14
R33 100K
R34 1000
R35 5600
C6 16V10(BZ)
R36 100K
MC14053BF
IC7
NJM4558M
IC9

MODEL / TYPE	AU-665	AU-65	AU-63	AU-62
NTSC	VEP84102A	See Next Page		
PAL	VEP84102A			

O VR SCHEMATIC DIAGRAM[FOR AU-665]

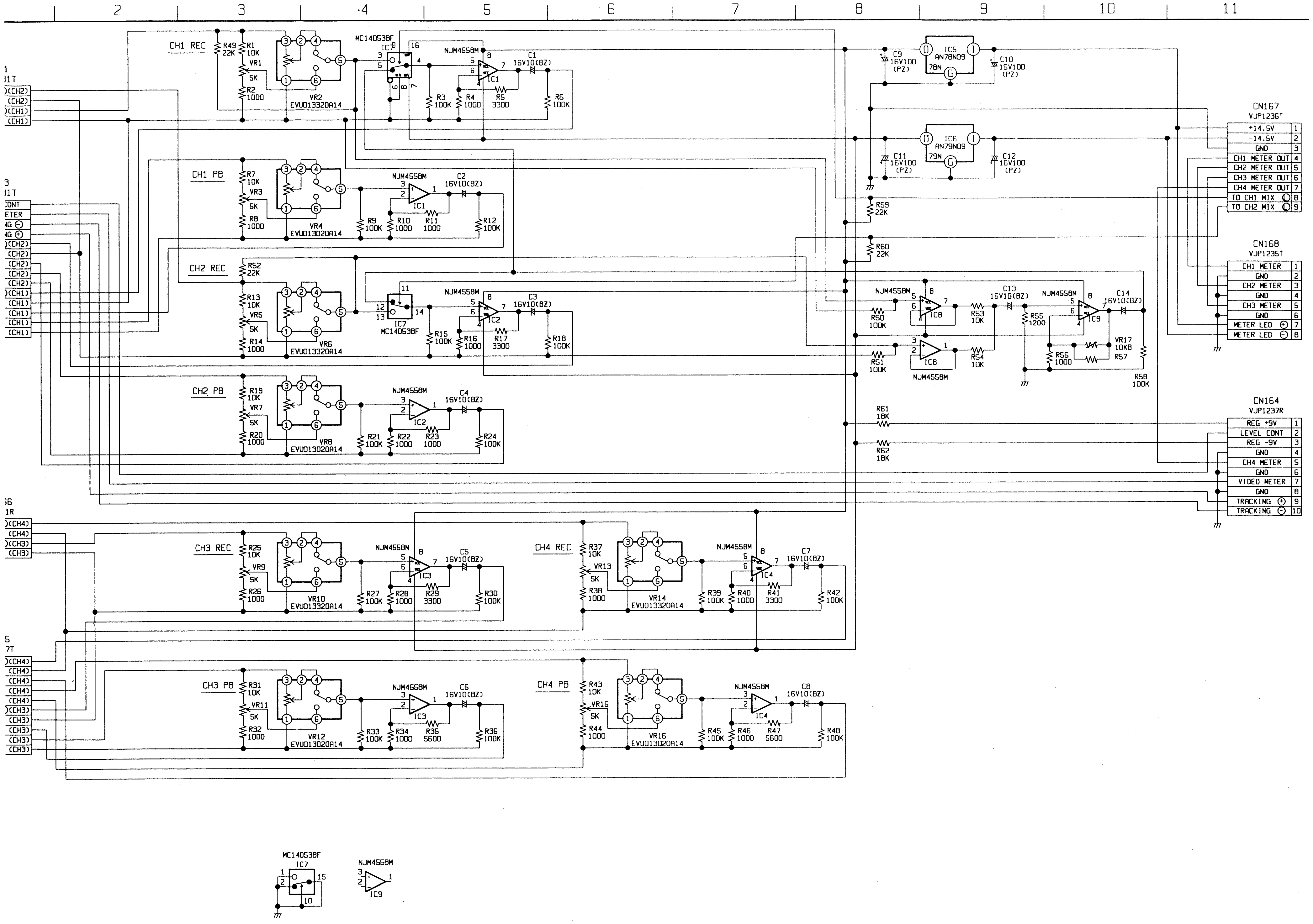

2
3
4
5
6
7
8
9
10
11
CH1 REC
R49 22K
R1 10K
VR1 5K
R2 1000
VR2 EVU01332OA14
MC14053BF
IC7
16
NJM4558M
IC1
C1 16V10(BZ)
R3 100K
R4 1000
R5 3300
R6 100K
CH1 PB
R7 10K
VR3 5K
R8 1000
VR4 EVU01302OA14
C2 16V10(BZ)
R9 100K
R10 1000
R11 1000
R12 100K
CH2 REC
R52 22K
R13 10K
VR5 5K
R14 1000
VR6 EVU01332OA14
MC14053BF
C3 16V10(BZ)
IC2
R15 100K
R16 1000
R17 3300
R18 100K
CH2 PB
R19 10K
VR7 5K
R20 1000
VR8 EVU01302OA14
C4 16V10(BZ)
R21 100K
R22 1000
R23 1000
R24 100K
CH3 REC
R25 10K
VR9 5K
R26 1000
VR10 EVU01332OA14
C5 16V10(BZ)
IC3
R27 100K
R28 1000
R29 3300
R30 100K
CH4 REC
R37 10K
VR13 5K
R38 1000
VR14 EVU01332OA14
C7 16V10(BZ)
IC4
R39 100K
R40 1000
R41 3300
R42 100K
CH3 PB
R31 10K
VR11 5K
R32 1000
VR12 EVU01302OA14
C6 16V10(BZ)
R33 100K
R34 1000
R35 5600
R36 100K
CH4 PB
R43 10K
VR15 5K
R44 1000
VR16 EVU01302OA14
C8 16V10(BZ)
R45 100K
R46 1000
R47 5600
R48 100K
IC5 AN78N09
78N
C9 16V100 (PZ)
C10 16V100 (PZ)
IC6 AN79N09
79N
C11 16V100 (PZ)
C12 16V100 (PZ)
R59 22K
R60 22K
NJM4558M
IC8
R50 100K
R51 100K
R53 10K
R54 10K
C13 16V10(BZ)
R55 1200
IC9
C14 16V10(BZ)
R56 1000
VR17 10KB
R57
R58 100K
R61 18K
R62 18K
CN167 VJP1236T
+14.5V 1
-14.5V 2
GND 3
CH1 METER OUT 4
CH2 METER OUT 5
CH3 METER OUT 6
CH4 METER OUT 7
TO CH1 MIX 8
TO CH2 MIX 9
CN168 VJP1235T
CH1 METER 1
GND 2
CH2 METER 3
GND 4
CH3 METER 5
GND 6
METER LED ⊕ 7
METER LED ⊖ 8
CN164 VJP1237R
REG +9V 1
LEVEL CONT 2
REG -9V 3
GND 4
CH4 METER 5
GND 6
VIDEO METER 7
GND 8
TRACKING ⊕ 9
TRACKING ⊖ 10
1T
(CH2)
(CH2)
(CH1)
(CH1)
1T
ONT
ETER
(CH2)
(CH2)
(CH2)
(CH2)
(CH1)
(CH1)
(CH1)
(CH1)
1R
(CH4)
(CH4)
(CH3)
(CH3)
7T
(CH4)
(CH4)
(CH4)
(CH4)
(CH4)
(CH3)
(CH3)
(CH3)
(CH3)
(CH3)
MC14053BF
IC7
15
10
NJM4558M
IC9

AUDIO VR SCHEMATIC DIAGRAM

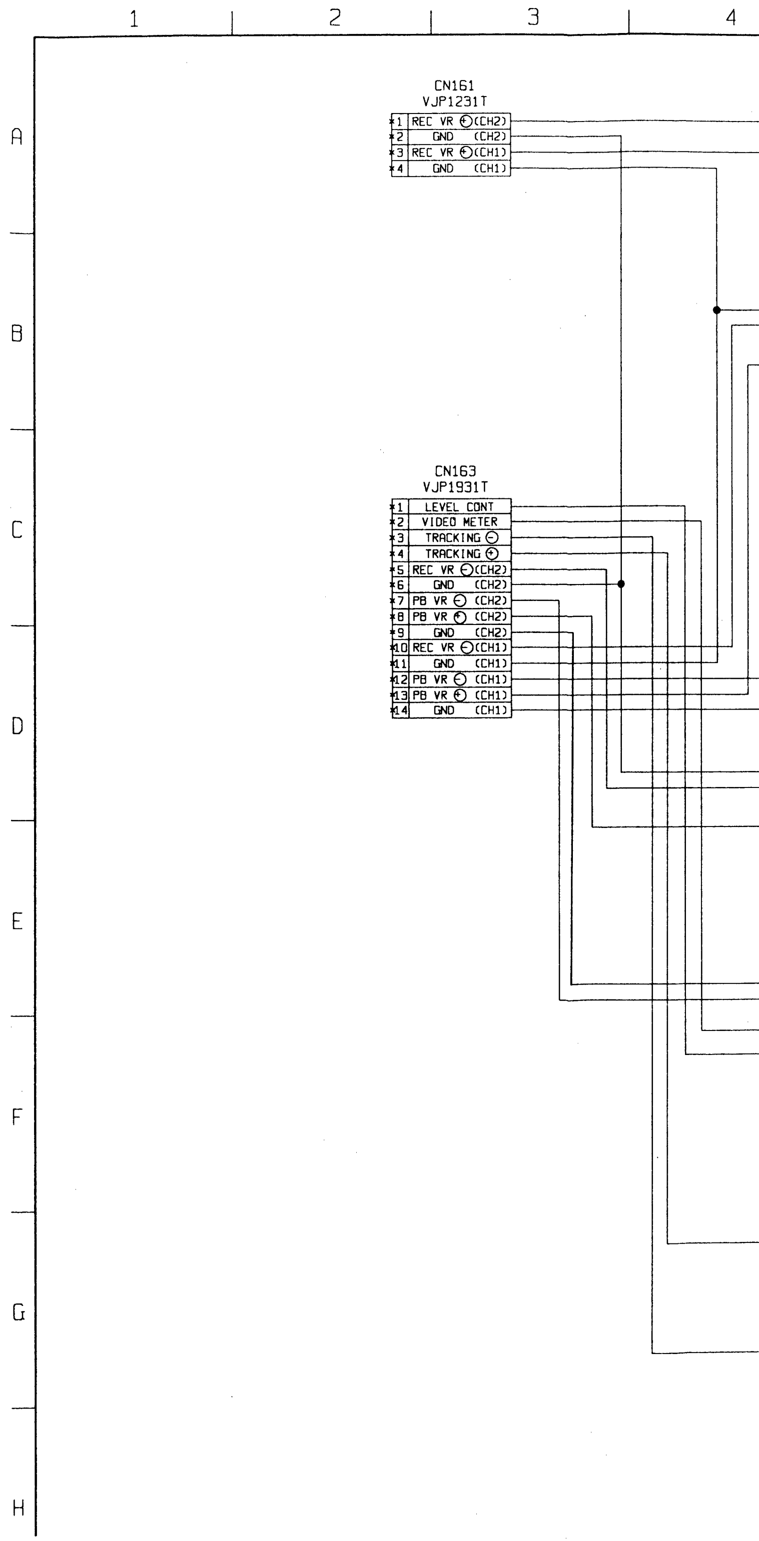

1
2
3
4
A
B
C
D
E
F
G
H
CN161 VJP1231T
1 REC VR ⊕(CH2)
2 GND (CH2)
3 REC VR ⊕(CH1)
4 GND (CH1)
CN163 VJP1931T
1 LEVEL CONT
2 VIDEO METER
3 TRACKING ⊖
4 TRACKING ⊕
5 REC VR ⊖(CH2)
6 GND (CH2)
7 PB VR ⊖ (CH2)
8 PB VR ⊕ (CH2)
9 GND (CH2)
10 REC VR ⊖(CH1)
11 GND (CH1)
12 PB VR ⊖ (CH1)
13 PB VR ⊕ (CH1)
14 GND (CH1)

MODEL / TYPE	AU-665	AU-65	AU-63	AU-62
NTSC	See Front Page	VEP84101A	VEP84101C	VEP84101B
PAL	See Front Page	VEP84101A	VEP84101C	VEP84101B

AUDIO VR SCHEMATIC DIAGRAM[FOR AU-65,AU-63,AU-62]

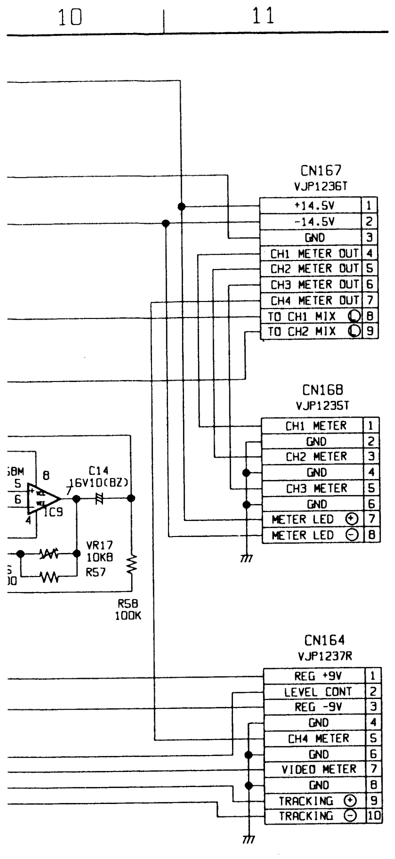

10
11
CN167
VJP1236T
+14.5V 1
-14.5V 2
GND 3
CH1 METER OUT 4
CH2 METER OUT 5
CH3 METER OUT 6
CH4 METER OUT 7
TO CH1 MIX 8
TO CH2 MIX 9
CN168
VJP1235T
CH1 METER 1
GND 2
CH2 METER 3
GND 4
CH3 METER 5
GND 6
METER LED ⊕ 7
METER LED ⊖ 8
C14
16V10(BZ)
IC9
VR17
10KB
R57
R58
100K
CN164
VJP1237R
REG +9V 1
LEVEL CONT 2
REG -9V 3
GND 4
CH4 METER 5
GND 6
VIDEO METER 7
GND 8
TRACKING ⊕ 9
TRACKING ⊖ 10

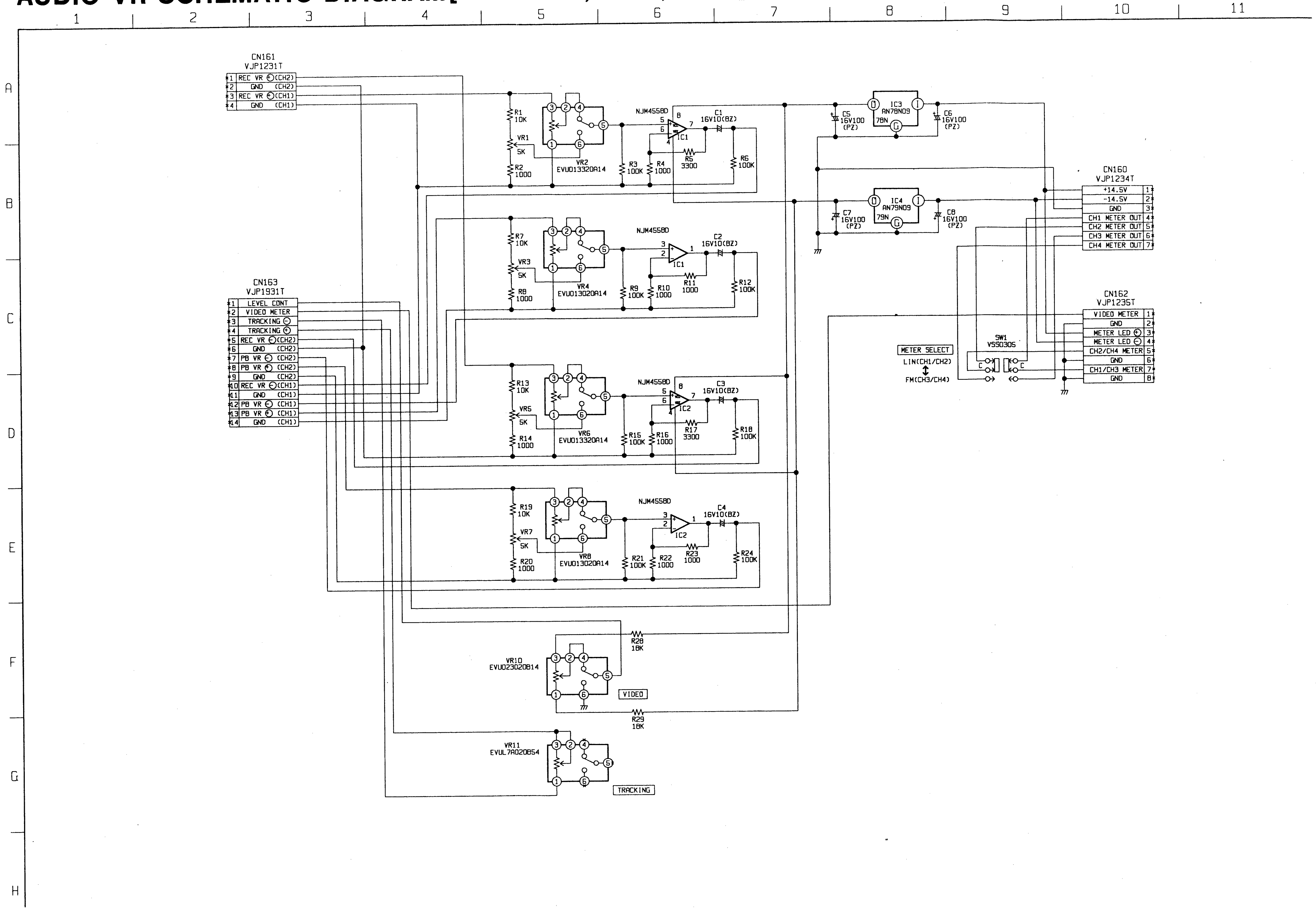

1
2
3
4
5
6
7
8
9
10
11
A
B
C
D
E
F
G
H
CN161
VJP1231T
1 REC VR ⊕(CH2)
2 GND (CH2)
3 REC VR ⊕(CH1)
4 GND (CH1)
CN163
VJP1931T
1 LEVEL CONT
2 VIDEO METER
3 TRACKING ⊖
4 TRACKING ⊕
5 REC VR ⊖(CH2)
6 GND (CH2)
7 PB VR ⊖ (CH2)
8 PB VR ⊕ (CH2)
9 GND (CH2)
10 REC VR ⊖(CH1)
11 GND (CH1)
12 PB VR ⊖ (CH1)
13 PB VR ⊕ (CH1)
14 GND (CH1)
R1 10K
VR1 5K
R2 1000
VR2 EVU013320A14
NJM4558D
IC1
C1 16V10(BZ)
R3 100K
R4 1000
R5 3300
R6 100K
R7 10K
VR3 5K
R8 1000
VR4 EVU013020A14
NJM4558D
C2 16V10(BZ)
R9 100K
R10 1000
R11 1000
R12 100K
R13 10K
VR5 5K
R14 1000
VR6 EVU013320A14
NJM4558D
IC2
C3 16V10(BZ)
R15 100K
R16 1000
R17 3300
R18 100K
R19 10K
VR7 5K
R20 1000
VR8 EVU013020A14
NJM4558D
C4 16V10(BZ)
R21 100K
R22 1000
R23 1000
R24 100K
R28 18K
VR10 EVU023020B14
VIDEO
R29 18K
VR11 EVUL7A020B54
TRACKING
IC3 AN78N09
78N
C5 16V100 (PZ)
C6 16V100 (PZ)
IC4 AN79N09
79N
C7 16V100 (PZ)
C8 16V100 (PZ)
CN160
VJP1234T
+14.5V 1
-14.5V 2
GND 3
CH1 METER OUT 4
CH2 METER OUT 5
CH3 METER OUT 6
CH4 METER OUT 7
CN162
VJP1235T
VIDEO METER 1
GND 2
METER LED ⊕ 3
METER LED ⊖ 4
CH2/CH4 METER 5
GND 6
CH1/CH3 METER 7
GND 8
SW1
VSS030S
METER SELECT
LIN(CH1/CH2)
FM(CH3/CH4)

MODEL TYPE	AU-665	AU-65	AU-63	AU-62
NTSC	VEP80612A	See Next Page		
PAL	———			

FRONT INTERFACE SCHEMATIC DIAGRAM[FOR AU-665]

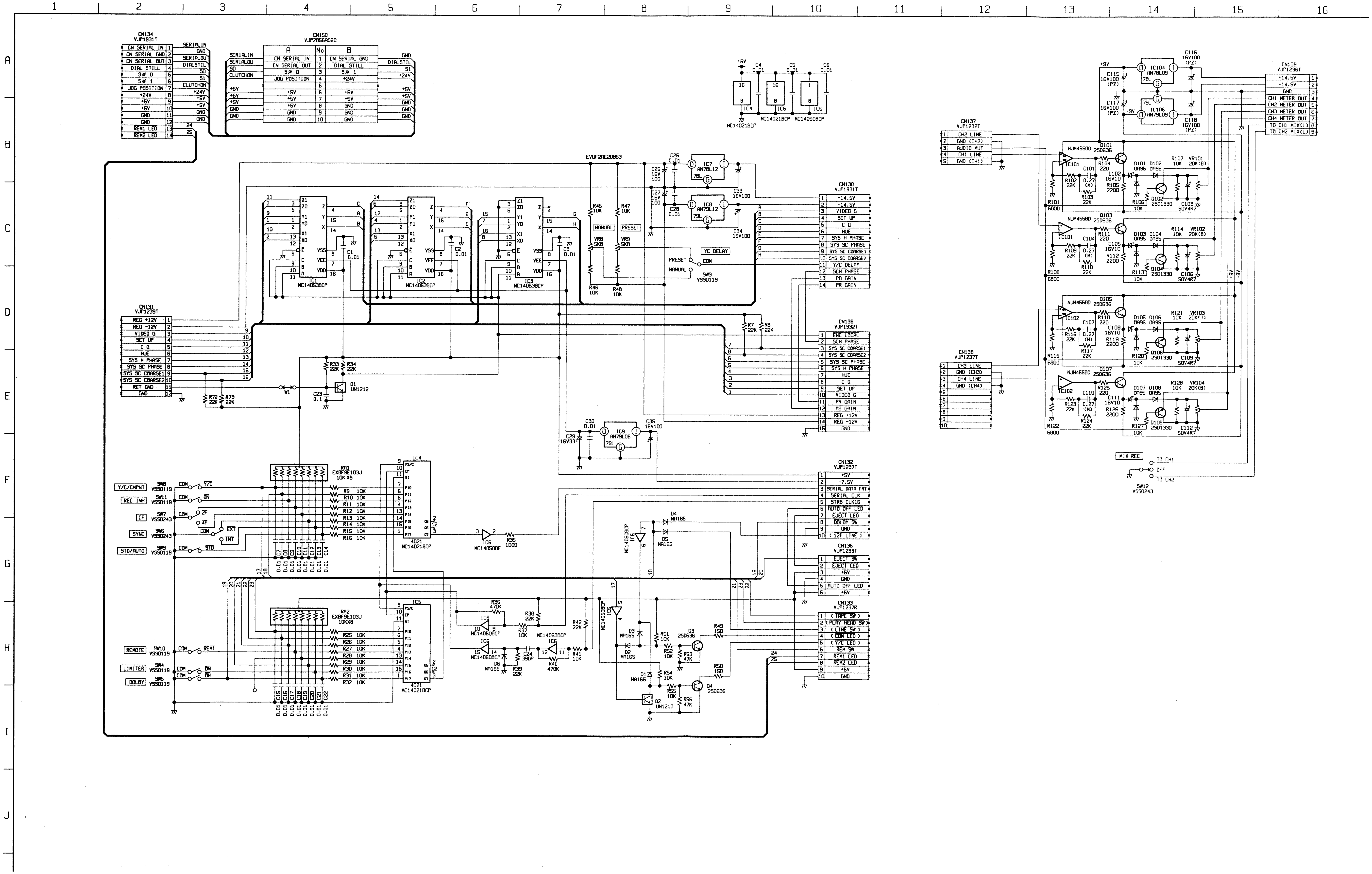

1
2
3
4
5
6
7
8
9
10
11
12
13
14
15
16
A
B
C
D
E
F
G
H
I
J
CN134
VJP1931T
CN SERIAL IN
CN SERIAL GND
CN SERIAL OUT
DIAL STILL
5# 0
5# 1
JOG POSITION
+24V
+5V
GND
REM1 LED
REM2 LED
CN150
VJP2856A020
SERIAL IN
SERIAL OUT
CLUTCHON
DIALSTIL
IC1
MC14053BCP
IC2
MC14053BCP
IC3
MC14053BCP
EVUF2AE20B53
MANUAL
PRESET
VR8
5KB
VR9
5KB
YC DELAY
SW3
VSS0119
IC7
AN78L12
IC8
AN79L12
CN130
VJP1931T
+14.5V
-14.5V
VIDEO G
SET UP
C G
HUE
SYS H PHASE
SYS SC PHASE
SYS SC COARSE1
SYS SC COARSE2
Y/C DELAY
SCH PHASE
PB GAIN
PR GAIN
CN131
VJP1239T
REG +12V
REG -12V
RET GND
GND
CN136
VJP1932T
ENC LOCAL
REG +12V
REG -12V
D1
UN1212
IC9
AN79L05
IC4
MC14021BCP
IC5
MC14050BCP
IC6
MC14050BCP
RA1
EXBF9E103J
10K X8
RA2
EXBF9E103J
10KX8
Y/C/CMPNT
REC INH
CF
SYNC
STD/AUTO
REMOTE
LIMITER
DOLBY
SW8
SW11
SW7
SW6
SW9
SW10
SW4
SW5
VSS0119
VSS0243
EXT
INT
STD
4021
MC14021BCP
R35
1000
CN132
VJP1237T
+5V
-7.5V
SERIAL DATA FRT
SERIAL CLK
STRB CLK16
AUTO OFF LED
EJECT LED
DOLBY SW
GND
(I2P LINE)
CN135
VJP1233T
EJECT SW
EJECT LED
AUTO OFF LED
CN133
VJP1237R
(TAPE SW)
(PLAY HEAD SW)
(LINE SW)
(CDR LED)
(Y/C LED)
REM SW
REM1 LED
REM2 LED
D4
MA165
D5
MA165
Q3
2SD636
Q4
2SD636
D2
UN1213
MC14053BCP
CN137
VJP1232T
CH2 LINE
GND (CH2)
AUDIO MUT
CH1 LINE
GND (CH1)
CN138
VJP1237T
CH3 LINE
GND (CH3)
CH4 LINE
GND (CH4)
IC101
IC102
NJM4558D
Q101
Q103
Q105
Q107
2SD636
2SD1330
IC104
AN78L09
IC105
AN79L09
CN139
VJP1236T
+14.5V
-14.5V
GND
CH1 METER OUT
CH2 METER OUT
CH3 METER OUT
CH4 METER OUT
TO CH1 MIX(L)
TO CH2 MIX(L)
MIX REC
TO CH1
OFF
TO CH2
SW12
VSS0243
+5V
-5V
+9V
-9V

TYPE \ MODEL	AU-665	AU-65	AU-63	AU-62
NTSC	See Front Page	VEP80553A	VEP80553C	VEP80553B
PAL	———	VEP80631A	VEP80631B	VEP80631C

FRONT INTERFACE SCHEMATIC DIAGRAM[FOR AU-65,AU-63,AU-62]

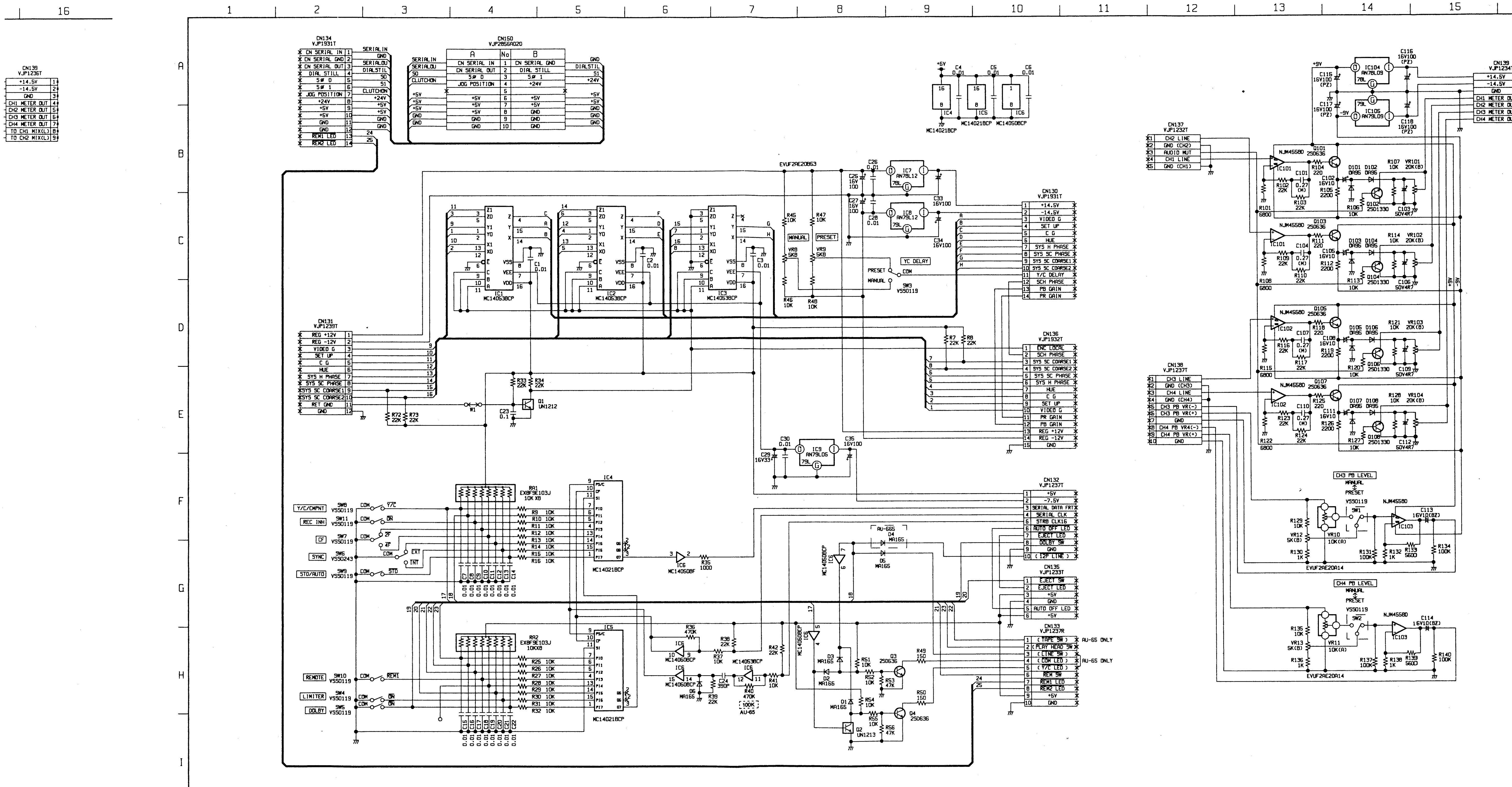

16
1
2
3
4
5
6
7
8
9
10
11
12
13
14
15
A
B
C
D
E
F
G
H
I
J
CN139
VJP1236T
+14.5V
-14.5V
GND
CH1 METER OUT
CH2 METER OUT
CH3 METER OUT
CH4 METER OUT
TO CH1 MIX(L)
TO CH2 MIX(L)
CN134
VJP1931T
CN SERIAL IN
CN SERIAL GND
CN SERIAL OUT
DIAL STILL
5# 0
5# 1
JOG POSITION
+24V
+5V
GND
REM1 LED
REM2 LED
CN150
VJP2856A020
SERIAL IN
SERIAL OUT
CLUTCHON
DIALSTIL
IC1
MC14053BCP
IC2
MC14053BCP
IC3
MC14053BCP
EVUF2AE20B53
IC7
AN78L12
IC8
AN79L12
MANUAL
PRESET
YC DELAY
SW3
VS50119
IC4
MC14021BCP
IC5
MC14021BCP
IC6
MC14050BCP
CN130
VJP1931T
+14.5V
-14.5V
VIDEO G
SET UP
C G
HUE
SYS H PHASE
SYS SC PHASE
SYS SC COARSE1
SYS SC COARSE2
Y/C DELAY
SCH PHASE
PB GAIN
PR GAIN
CN131
VJP1239T
REG +12V
REG -12V
RET GND
CN136
VJP1932T
ENC LOCAL
REG +12V
REG -12V
Q1
UN1212
IC9
AN79L05
RA1
EXBF9E103J
10K X8
RA2
EXBF9E103J
10KX8
Y/C/CMPNT
REC INH
CF
SYNC
STD/AUTO
REMOTE
LIMITER
DOLBY
CN132
VJP1237T
SERIAL DATA FRT
SERIAL CLK
STRB CLK16
AUTO OFF LED
EJECT LED
DOLBY SW
(12P LINE)
CN135
VJP1233T
EJECT SW
CN133
VJP1237R
(TAPE SW)
(PLAY HEAD SW)
(LINE SW)
(COM LED)
(Y/C LED)
REM SW
REM1 LED
REM2 LED
AU-65 ONLY
D4
MA165
D5
MA165
Q3
2SD636
Q4
2SD636
Q2
UN1213
CN137
VJP1232T
CH2 LINE
GND (CH2)
AUDIO MUT
CH1 LINE
GND (CH1)
CN138
VJP1237T
CH3 LINE
GND (CH3)
CH4 LINE
GND (CH4)
CH3 PB VR(-)
CH3 PB VR(+)
CH4 PB VR(-)
CH4 PB VR(+)
IC104
AN78L09
IC105
AN79L09
NJM4558D
IC101
IC102
IC103
2SD1330
CH3 PB LEVEL
CH4 PB LEVEL
EVUF2AE20A14

	AU-65	AU-63	AU-62
C12	0.01	0	0
C15	0.01	0	0.01
C16	0.01	0	0
D5	MA165	MA165	———

MODEL / TYPE	AU-665	AU-65	AU-63	AU-62
NTSC	VEP80559B	VEP80559A	VEP80559D	VEP80559C
PAL	VEP80559B	VEP80559A	VEP80559D	VEP80559C

FRONT MODE SELECT SCHEMATIC DIAGRAM

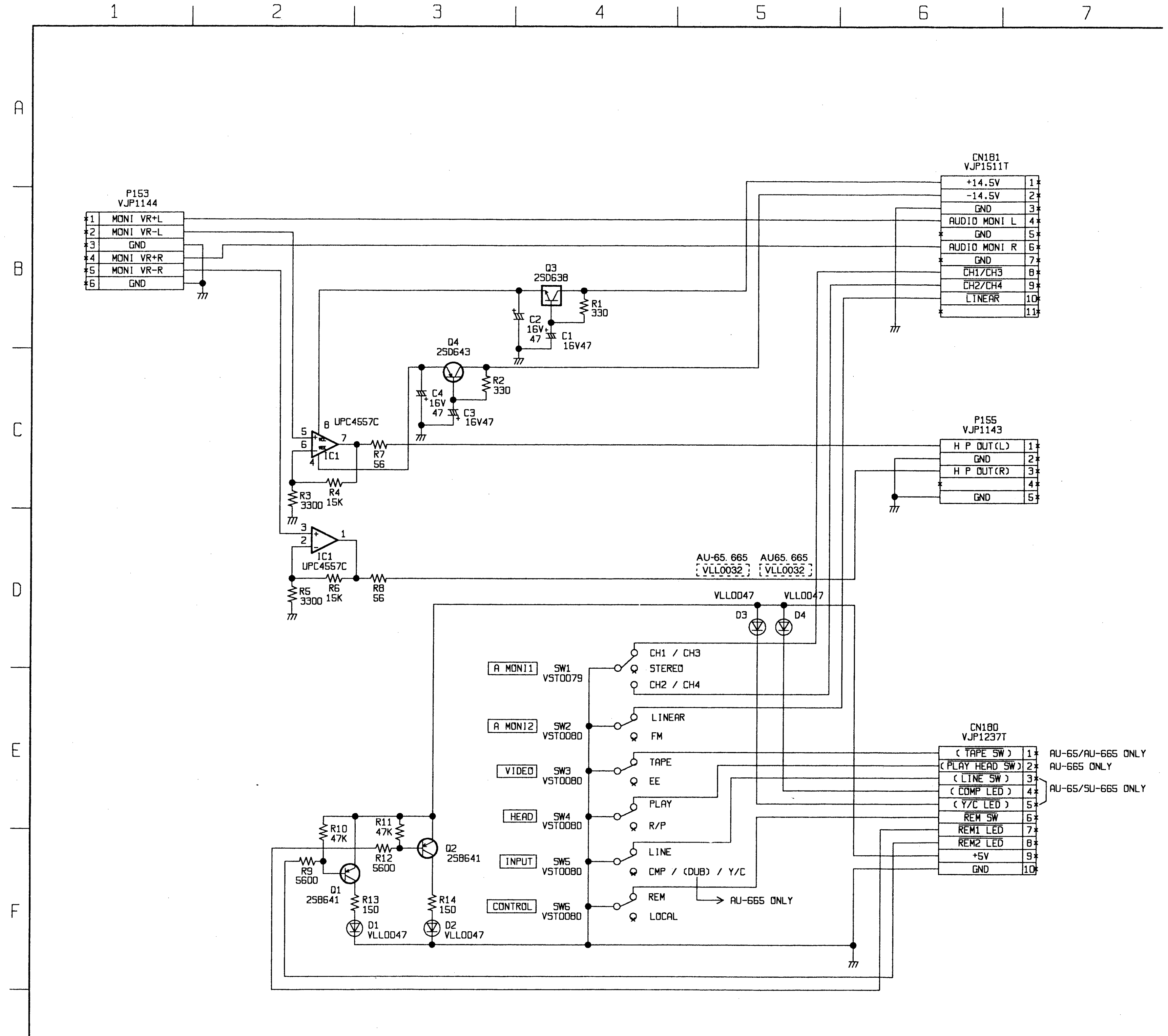
1
2
3
4
5
6
7
A
B
C
D
E
F
G
P153
VJP1144
1 MONI VR+L
2 MONI VR-L
3 GND
4 MONI VR+R
5 MONI VR-R
6 GND
CN181
VJP1511T
+14.5V
-14.5V
GND
AUDIO MONI L
GND
AUDIO MONI R
GND
CH1/CH3
CH2/CH4
LINEAR
Q3
2SD638
R1
330
C2
16V
47
C1
16V47
D4
2SD643
R2
330
C4
16V
47
C3
16V47
UPC4557C
IC1
R7
56
R3
3300
R4
15K
R5
3300
R6
15K
R8
56
P155
VJP1143
H P OUT(L)
GND
H P OUT(R)
GND
AU-65. 665
VLL0032
AU65. 665
VLL0032
VLL0047
D3
D4
A MONI1
SW1
VST0079
CH1 / CH3
STEREO
CH2 / CH4
A MONI2
SW2
VST0080
LINEAR
FM
VIDEO
SW3
VST0080
TAPE
EE
HEAD
SW4
VST0080
PLAY
R/P
INPUT
SW5
VST0080
LINE
CMP / (DUB) / Y/C
CONTROL
SW6
VST0080
REM
LOCAL
AU-665 ONLY
R10
47K
R11
47K
R12
5600
R9
5600
Q1
2SB641
Q2
2SB641
R13
150
R14
150
D1
VLL0047
D2
VLL0047
CN180
VJP1237T
(TAPE SW)
(PLAY HEAD SW)
(LINE SW)
(COMP LED)
(Y/C LED)
REM SW
REM1 LED
REM2 LED
+5V
GND
AU-65/AU-665 ONLY
AU-665 ONLY
AU-65/SU-665 ONLY

	AU-65	AU-63	AU-665	AU-635
SW3	○	×	○	×
SW4	×	×	○	×
D3	○	×	○	×
D4	○	×	○	×

FRONT PANEL A SCHEMATIC D

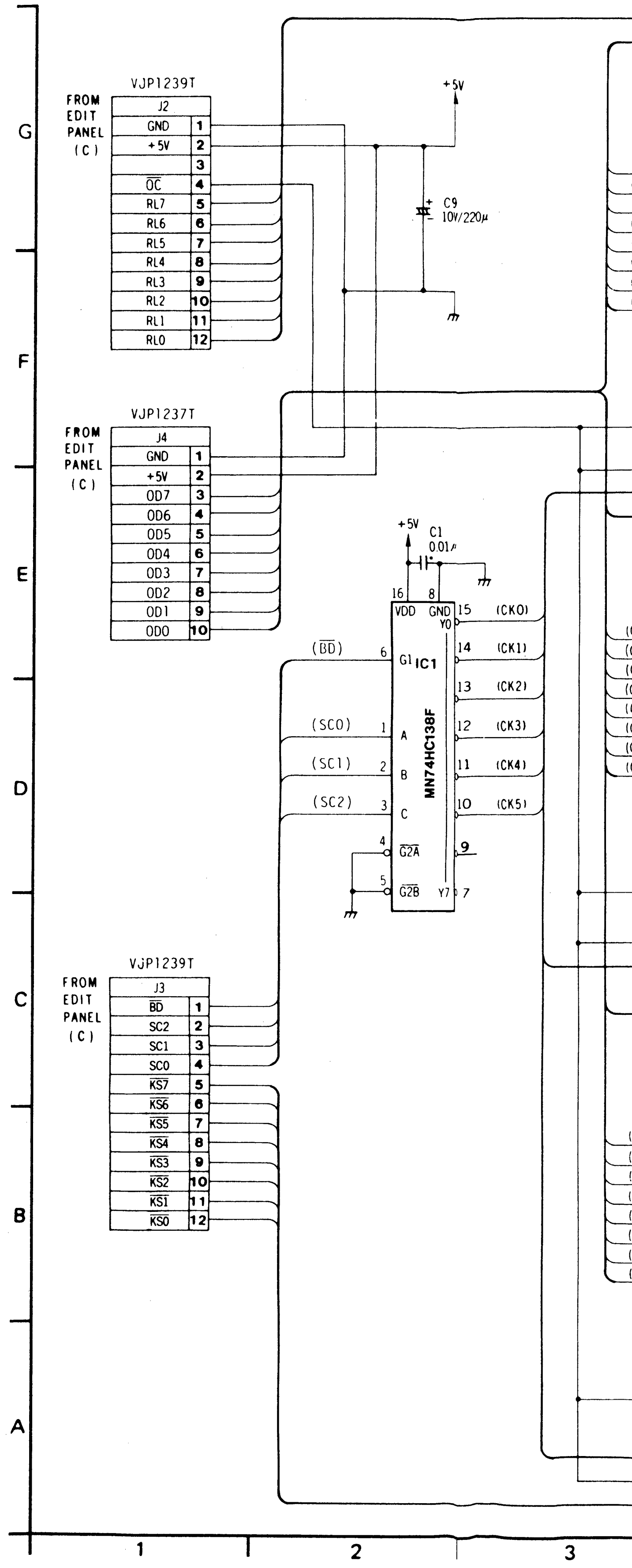
G
F
E
D
C
B
A
1
2
3
FROM EDIT PANEL (C)
VJP1239T
J2
GND
+5V
OC
RL7
RL6
RL5
RL4
RL3
RL2
RL1
RL0
+5V
C9
10V/220µ
VJP1237T
J4
GND
+5V
OD7
OD6
OD5
OD4
OD3
OD2
OD1
OD0
+5V
C1
0.01µ
VDD
GND
IC1
MN74HC138F
(BD)
(SC0)
(SC1)
(SC2)
(CK0)
(CK1)
(CK2)
(CK3)
(CK4)
(CK5)
G1
A
B
C
G2A
G2B
Y0
Y7
VJP1239T
J3
BD
SC2
SC1
SC0
KS7
KS6
KS5
KS4
KS3
KS2
KS1
KS0

REVERSE SIDE **FRONT INTERFACE SCHEMATIC DIAGRAM**

HEMATIC DIAGRAM [FOR AU-665 NTSC]

MODEL TYPE	AU-665／PE	AU-665	AU-65	AU-63	AU-62
NTSC	VEP66052C	See Next Page			
PAL	——				

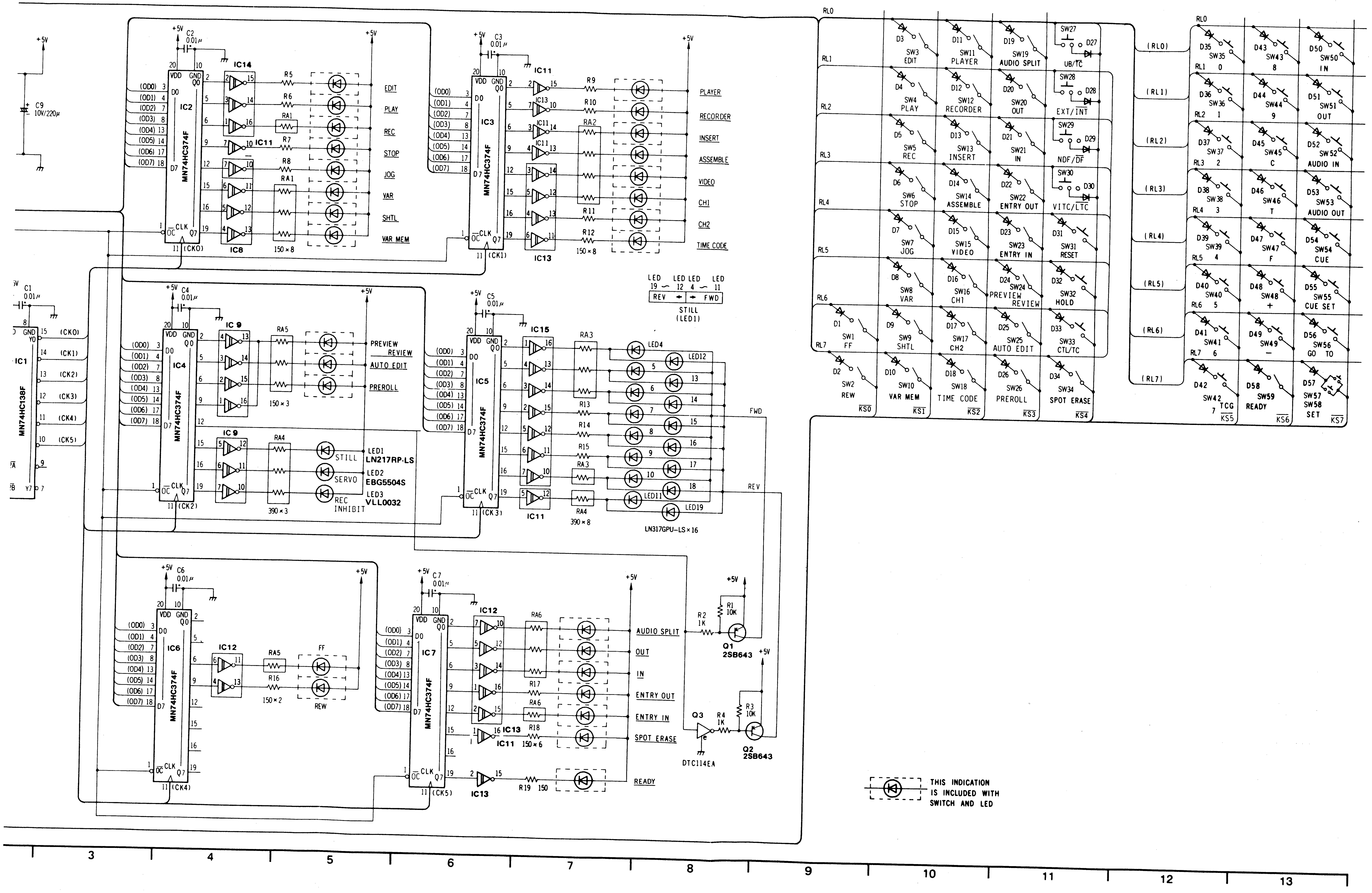

IC1 MN74HC138F
IC2 MN74HC374F
IC3 MN74HC374F
IC4 MN74HC374F
IC5 MN74HC374F
IC6 MN74HC374F
IC7 MN74HC374F
IC8
IC9
IC11
IC12
IC13
IC14
IC15
C1 0.01μ
C2 0.01μ
C3 0.01μ
C4 0.01μ
C5 0.01μ
C6 0.01μ
C7 0.01μ
C9 10V/220μ
+5V
(OD0)
(OD1)
(OD2)
(OD3)
(OD4)
(OD5)
(OD6)
(OD7)
(CK0)
(CK1)
(CK2)
(CK3)
(CK4)
(CK5)
VDD
GND
D0
D7
Q0
Q7
CLK
OC
EDIT
PLAY
REC
STOP
JOG
VAR
SHTL
VAR MEM
PLAYER
RECORDER
INSERT
ASSEMBLE
VIDEO
CH1
CH2
TIME CODE
PREVIEW
REVIEW
AUTO EDIT
PREROLL
LED1 STILL LN217RP-LS
LED2 SERVO EBG5504S
LED3 REC INHIBIT VLL0032
FF
REW
AUDIO SPLIT
OUT
IN
ENTRY OUT
ENTRY IN
SPOT ERASE
READY
LED 19 ~ 12
LED 4 ~ 11
REV ← → FWD
STILL (LED1)
FWD
REV
LED4
LED11
LED12
LED19
LN317GPU-LS×16
150×8
390×3
150×3
150×2
390×8
150×6
R1 10K
R2 1K
R3 10K
R4 1K
Q1 2SB643
Q2 2SB643
Q3 DTC114EA
R19 150
RL0
RL1
RL2
RL3
RL4
RL5
RL6
RL7
(RL0)
(RL1)
(RL2)
(RL3)
(RL4)
(RL5)
(RL6)
(RL7)
SW1 FF
SW2 REW
SW3 EDIT
SW4 PLAY
SW5 REC
SW6 STOP
SW7 JOG
SW8 VAR
SW9 SHTL
SW10 VAR MEM
SW11 PLAYER
SW12 RECORDER
SW13 INSERT
SW14 ASSEMBLE
SW15 VIDEO
SW16 CH1
SW17 CH2
SW18 TIME CODE
SW19 AUDIO SPLIT
SW20 OUT
SW21 IN
SW22 ENTRY OUT
SW23 ENTRY IN
SW24 PREVIEW REVIEW
SW25 AUTO EDIT
SW26 PREROLL
SW27 UB/TC
SW28 EXT/INT
SW29 NDF/DF
SW30 VITC/LTC
SW31 RESET
SW32 HOLD
SW33 CTL/TC
SW34 SPOT ERASE
SW35 0
SW36 1
SW37 2
SW38 3
SW39 4
SW40 5
SW41 6
SW42 7
SW43 8
SW44 9
SW45 C
SW46 T
SW47 F
SW48 +
SW49 −
SW50 IN
SW51 OUT
SW52 AUDIO IN
SW53 AUDIO OUT
SW54 CUE
SW55 CUE SET
SW56 GO TO
SW57 SW58 SET
TCG
SW59 READY
KS0
KS1
KS2
KS3
KS4
KS5
KS6
KS7
THIS INDICATION IS INCLUDED WITH SWITCH AND LED
3
4
5
6
7
8
9
10
11
12
13

TYPE \ MODEL	AU-665／PE	AU-665	AU-65	AU-63	AU-62
NTSC	See Front Page	VEP86050C	VEP86050C	See Next Page	
PAL	———	———	VEP86050D		

FRONT PANEL A SCHEMATIC DIAGRAM[FOR AU-65]

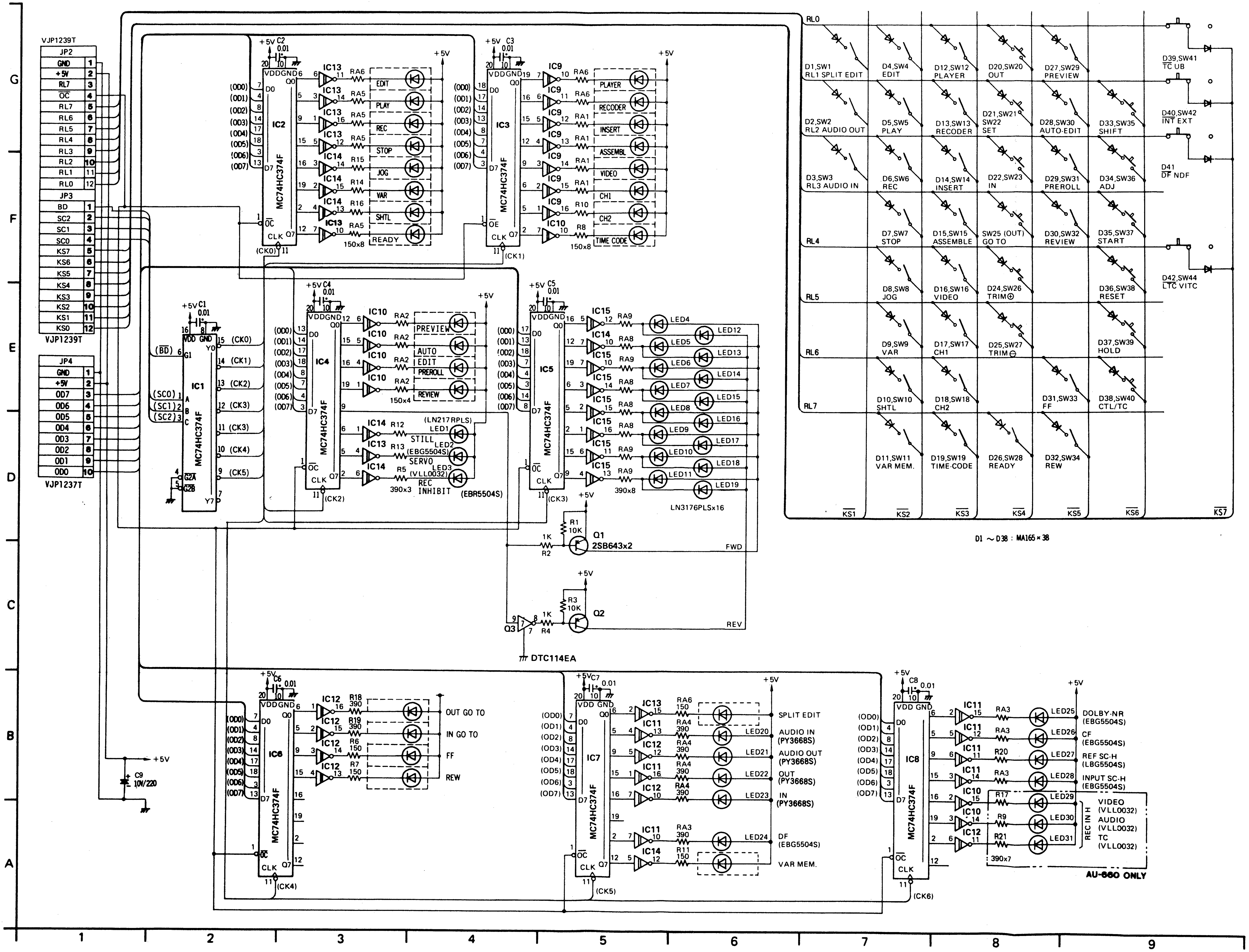

VJP1239T
JP2
GND
+5V
RL7
OC
RL6
RL5
RL4
RL3
RL2
RL1
RL0
JP3
BD
SC2
SC1
SC0
KS7
KS6
KS5
KS4
KS3
KS2
KS1
KS0
JP4
OD7
OD6
OD5
OD4
OD3
OD2
OD1
OD0
VJP1237T
IC1
IC2
IC3
IC4
IC5
IC6
IC7
IC8
MC74HC374F
IC9
IC10
IC11
IC12
IC13
IC14
IC15
EDIT
PLAY
REC
STOP
JOG
VAR
SHTL
READY
150x8
PLAYER
RECODER
INSERT
ASSEMBL
VIDEO
CH1
CH2
TIME CODE
PREVIEW
AUTO EDIT
PREROLL
REVIEW
150x4
(LN217RPLS)
LED1
STILL
LED2
(EBG5504S)
SERVO
(VLL0032)
LED3
REC INHIBIT
390x3
(EBR5504S)
LED4
LED5
LED6
LED7
LED8
LED9
LED10
LED11
LED12
LED13
LED14
LED15
LED16
LED17
LED18
LED19
390x8
LN3176PLSx16
Q1
2SB643x2
FWD
Q2
Q3
DTC114EA
REV
C9
10V/220
OUT GO TO
IN GO TO
FF
REW
SPLIT EDIT
AUDIO IN (PY3668S)
LED20
AUDIO OUT (PY3668S)
LED21
OUT (PY3668S)
LED22
IN (PY3668S)
LED23
DF (EBG5504S)
LED24
VAR MEM.
DOLBY-NR (EBG5504S)
LED25
CF (EBG5504S)
LED26
REF SC-H (LBG5504S)
LED27
INPUT SC-H (EBG5504S)
LED28
REC IN H
VIDEO (VLL0032)
LED29
AUDIO (VLL0032)
LED30
TC (VLL0032)
LED31
390x7
AU-660 ONLY
(CK0)
(CK1)
(CK2)
(CK3)
(CK4)
(CK5)
(CK6)
D1,SW1
RL1 SPLIT EDIT
D2,SW2
RL2 AUDIO OUT
D3,SW3
RL3 AUDIO IN
D4,SW4 EDIT
D5,SW5 PLAY
D6,SW6 REC
D7,SW7 STOP
D8,SW8 JOG
D9,SW9 VAR
D10,SW10 SHTL
D11,SW11 VAR MEM.
D12,SW12 PLAYER
D13,SW13 RECODER
D14,SW14 INSERT
D15,SW15 ASSEMBLE
D16,SW16 VIDEO
D17,SW17 CH1
D18,SW18 CH2
D19,SW19 TIME-CODE
D20,SW20 OUT
D21,SW21 SW22 SET
D22,SW23 IN
SW25 (OUT) GO TO
D24,SW26 TRIM⊕
D25,SW27 TRIM⊖
D26,SW28 READY
D27,SW29 PREVIEW
D28,SW30 AUTO-EDIT
D29,SW31 PREROLL
D30,SW32 REVIEW
D31,SW33 FF
D32,SW34 REW
D33,SW35 SHIFT
D34,SW36 ADJ
D35,SW37 START
D36,SW38 RESET
D37,SW39 HOLD
D38,SW40 CTL/TC
D39,SW41 TC UB
D40,SW42 INT EXT
D41 DF NDF
D42,SW44 LTC VITC
RL0
RL4
RL5
RL6
RL7
KS1
KS2
KS3
KS4
KS5
KS6
KS7
D1 ～ D38 : MA165×38
G
F
E
D
C
B
A
1
2
3
4
5
6
7
8
9

MODEL / TYPE	AU-665	AU-65	AU-63	AU-62
NTSC	See Page5-2-38	See Front Page	VEP86086A	VEP86086A
PAL	———	See Front Page	VEP86086A	VEP86086A

FRONT PANEL A SCHEMATIC DIAGRAM[FOR AU-62,AU-63]

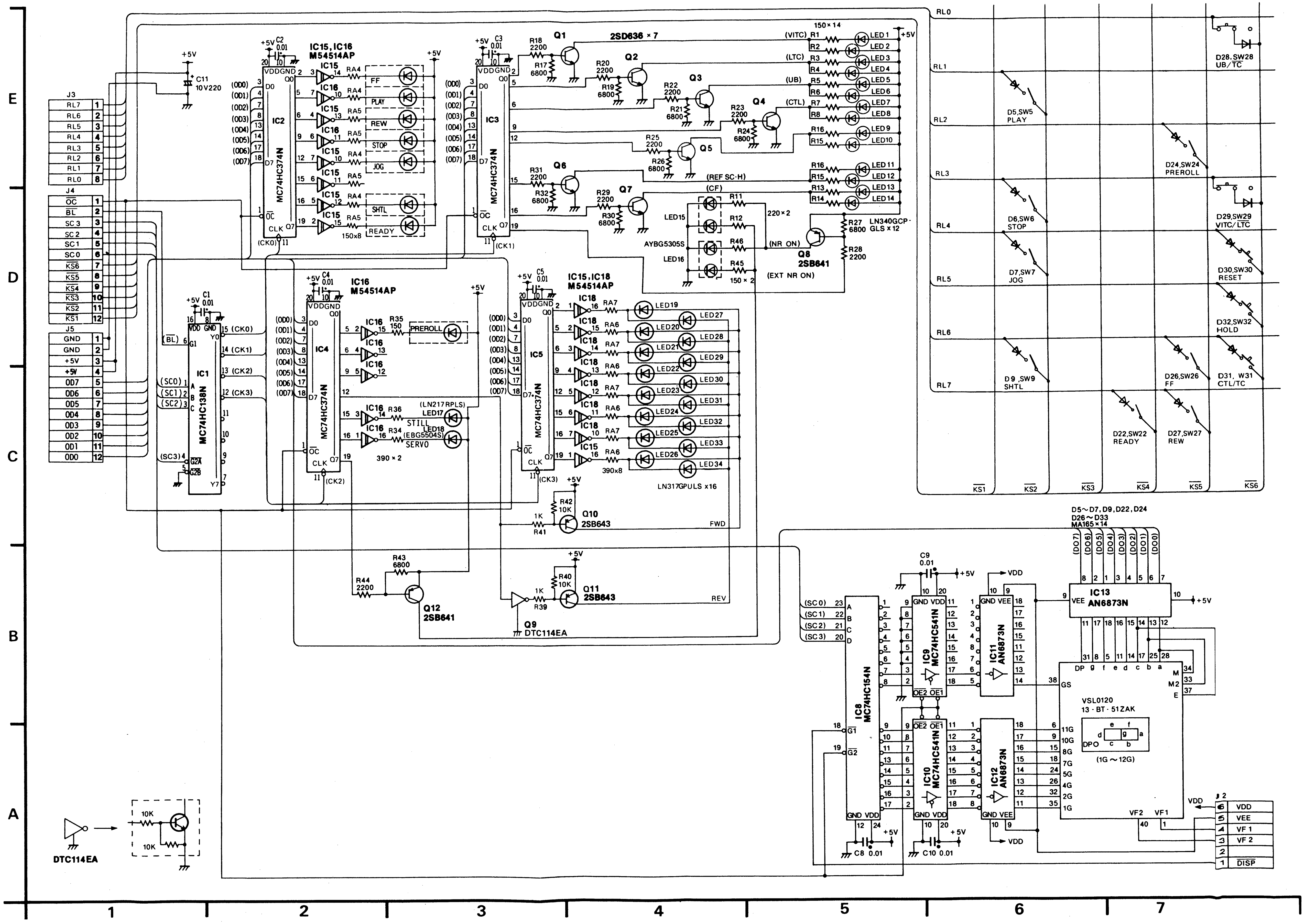

E
D
C
B
A
1
2
3
4
5
6
7
J3
RL7
RL6
RL5
RL4
RL3
RL2
RL1
RL0
J4
OC
BL
SC3
SC2
SC1
SC0
KS6
KS5
KS4
KS3
KS2
KS1
J5
GND
+5V
OD7
OD6
OD5
OD4
OD3
OD2
OD1
OD0
C11 10V220
IC1 MC74HC138N
IC2 MC74HC374N
IC3 MC74HC374N
IC4 MC74HC374N
IC5 MC74HC374N
IC15, IC16 M54514AP
IC16 M54514AP
IC15, IC18 M54514AP
FF
PLAY
REW
STOP
JOG
SHTL
READY
150x8
PREROLL
STILL
SERVO
LED17 (LN217RPLS)
LED18 (EBG5504S)
390 × 2
390x8
LN317GPULS x16
LED19
LED20
LED21
LED22
LED23
LED24
LED25
LED26
LED27
LED28
LED29
LED30
LED31
LED32
LED33
LED34
2SD636 × 7
Q1
Q2
Q3
Q4
Q5
Q6
Q7
150×14
(VITC)
(LTC)
(UB)
(CTL)
LED1
LED2
LED3
LED4
LED5
LED6
LED7
LED8
LED9
LED10
LED11
LED12
LED13
LED14
LN340GCP· GLS x 12
(REF SC-H)
(CF)
LED15
LED16
AYBG5305S
220×2
150 × 2
(NR ON)
(EXT NR ON)
Q8 2SB641
Q10 2SB643
FWD
Q11 2SB643
REV
Q9 DTC114EA
Q12 2SB641
DTC114EA
10K
IC8 MC74HC154N
IC9 MC74HC541N
IC10 MC74HC541N
IC11 AN6873N
IC12 AN6873N
IC13 AN6873N
C8 0.01
C9 0.01
C10 0.01
VSL0120 13-BT-51ZAK
(1G ~ 12G)
J2
VDD
VEE
VF1
VF2
DISP
D5~D7, D9, D22, D24 D26~D33 MA165×14
D5,SW5 PLAY
D6,SW6 STOP
D7,SW7 JOG
D9,SW9 SHTL
D22,SW22 READY
D24,SW24 PREROLL
D26,SW26 FF
D27,SW27 REW
D28,SW28 UB/TC
D29,SW29 VITC/LTC
D30,SW30 RESET
D32,SW32 HOLD
D31, W31 CTL/TC

FRONT PANEL B,C
SCHEMATIC DIAGRAM

TYPE \ MODEL	AU-665	AU-65	AU-63	AU-62
NTSC	VEP66022A	VEP66022A	VEP86076C	VEP86076C
PAL	VEP66022A	VEP66022A	VEP86076D	VEP86076D

FRONT PANEL B SCHEMATIC DIAGRAM[FOR AU-665,AU-65]

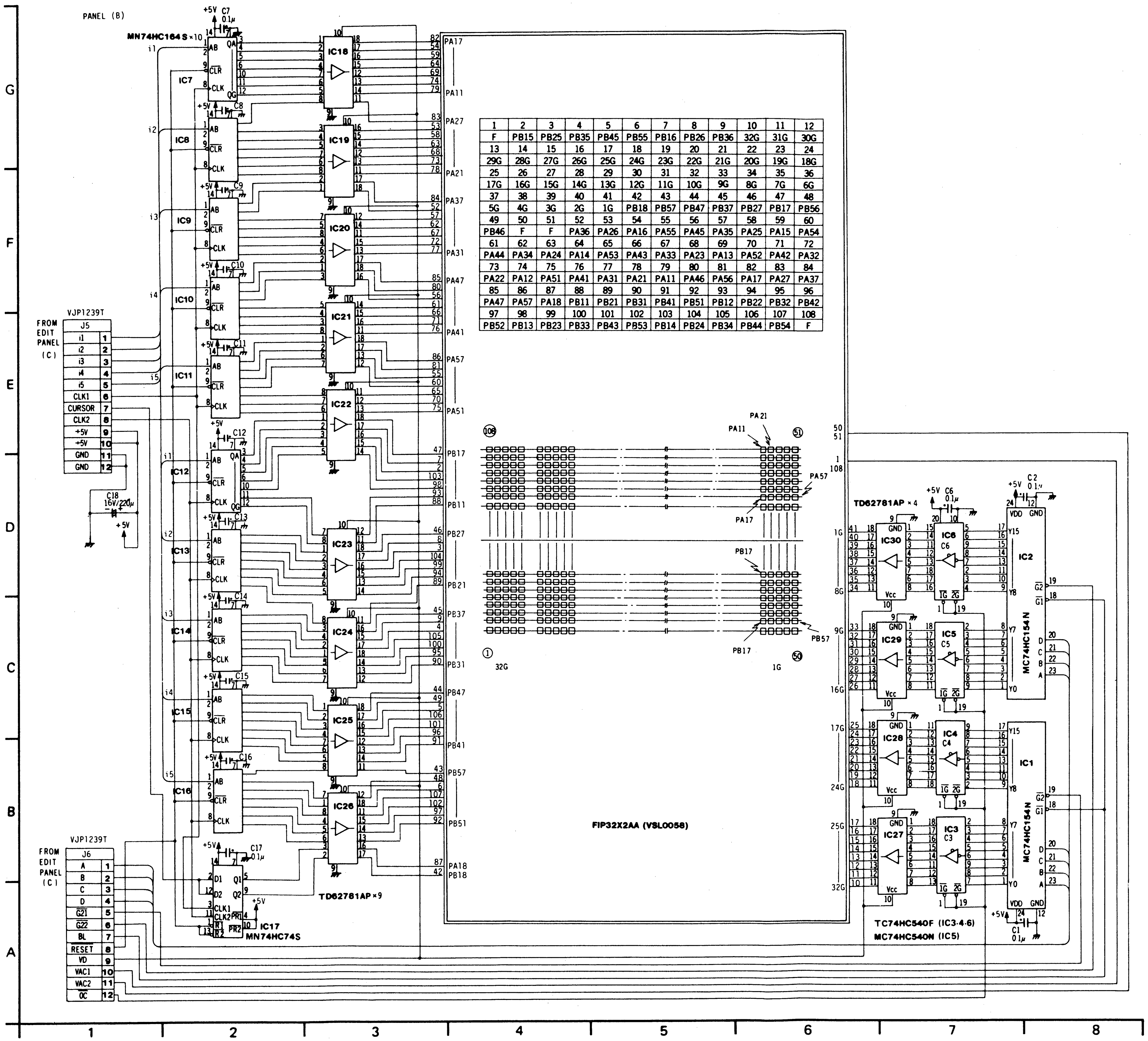

PANEL (B)
MN74HC164S×10
IC7
IC8
IC9
IC10
IC11
IC12
IC13
IC14
IC15
IC16
IC17
MN74HC74S
IC18
IC19
IC20
IC21
IC22
IC23
IC24
IC25
IC26
TD62781AP×9
TD62781AP×4
IC27
IC28
IC29
IC30
IC3
IC4
IC5
IC6
IC1
IC2
MC74HC154N
TC74HC540F (IC3·4·6)
MC74HC540N (IC5)
FIP32X2AA (VSL0058)
VJP1239T
J5
FROM EDIT PANEL (C)
i1
i2
i3
i4
i5
CLK1
CURSOR
CLK2
+5V
GND
C18 16V/220μ
J6
A
B
C
D
G21
G22
BL
RESET
VD
VAC1
VAC2
OC
PA11
PA17
PA21
PA27
PA31
PA37
PA41
PA47
PA51
PA57
PA18
PB11
PB17
PB18
PB21
PB27
PB31
PB37
PB41
PB47
PB51
PB57
1G
8G
9G
16G
17G
24G
25G
32G
G
F
E
D
C
B
A
1
2
3
4
5
6
7
8

1	2	3	4	5	6	7	8	9	10	11	12
F	PB15	PB25	PB35	PB45	PB55	PB16	PB26	PB36	32G	31G	30G
13	14	15	16	17	18	19	20	21	22	23	24
29G	28G	27G	26G	25G	24G	23G	22G	21G	20G	19G	18G
25	26	27	28	29	30	31	32	33	34	35	36
17G	16G	15G	14G	13G	12G	11G	10G	9G	8G	7G	6G
37	38	39	40	41	42	43	44	45	46	47	48
5G	4G	3G	2G	1G	PB18	PB57	PB47	PB37	PB27	PB17	PB56
49	50	51	52	53	54	55	56	57	58	59	60
PB46	F	F	PA36	PA26	PA16	PA55	PA45	PA35	PA25	PA15	PA54
61	62	63	64	65	66	67	68	69	70	71	72
PA44	PA34	PA24	PA14	PA53	PA43	PA33	PA23	PA13	PA52	PA42	PA32
73	74	75	76	77	78	79	80	81	82	83	84
PA22	PA12	PA51	PA41	PA31	PA21	PA11	PA46	PA56	PA17	PA27	PA37
85	86	87	88	89	90	91	92	93	94	95	96
PA47	PA57	PA18	PB11	PB21	PB31	PB41	PB51	PB12	PB22	PB32	PB42
97	98	99	100	101	102	103	104	105	106	107	108
PB52	PB13	PB23	PB33	PB43	PB53	PB14	PB24	PB34	PB44	PB54	F

REVERSE SIDE **FRONT PANEL A SCHEMATIC DIAGRAM**

FRONT PANEL C SCHEMAT

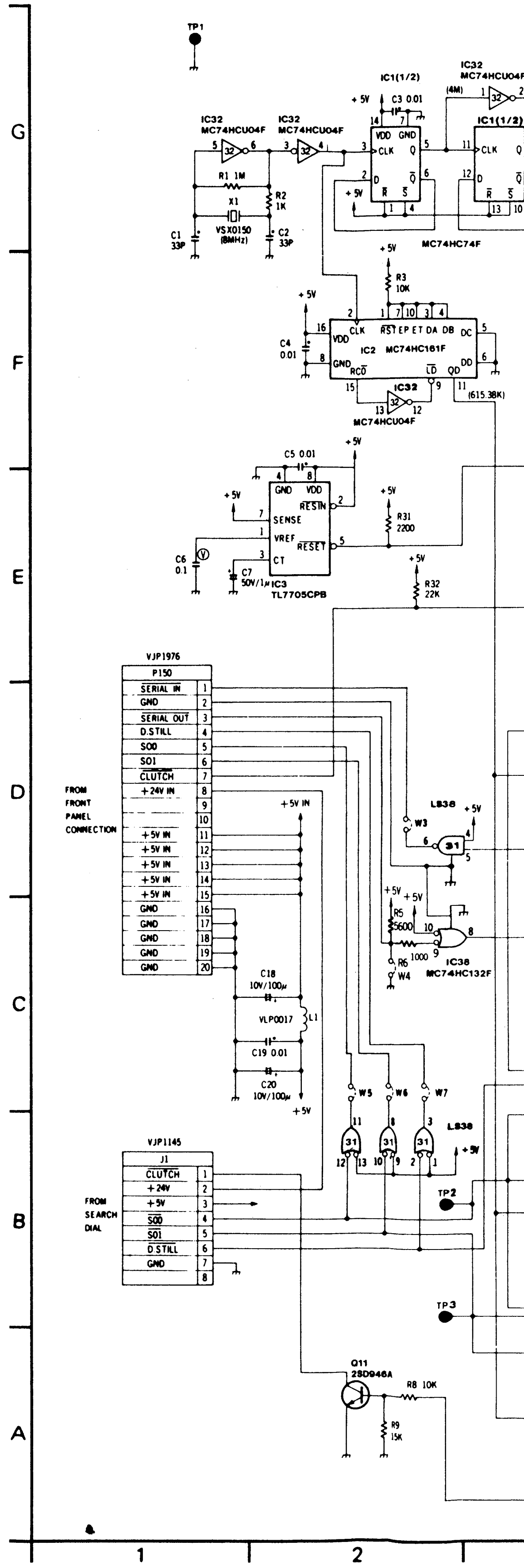

TP1
IC32 MC74HCU04F
IC1(1/2)
C3 0.001
MC74HC74F
R1 1M
X1 VSX0150 (8MHz)
C1 33P
C2 33P
R2 1K
R3 10K
IC2 MC74HC161F
C4 0.01
MC74HCU04F
C5 0.01
IC3 TL7705CPB
C6 0.1
C7 50V/1μ
R31 2200
R32 22K
VJP1976
P150
SERIAL IN
GND
SERIAL OUT
D.STILL
S00
S01
CLUTCH
+24V IN
+5V IN
FROM FRONT PANEL CONNECTION
C18 10V/100μ
VLP0017
L1
C19 0.01
C20 10V/100μ
IC38 MC74HC132F
LS36
LS38
VJP1145
J1
FROM SEARCH DIAL
TP2
TP3
Q11 2SD946A
R8 10K
R9 15K
G
F
E
D
C
B
A
1
2

MODEL TYPE	AU-665	AU-65	AU-63	AU-62
NTSC	VEP66053E	See Next Page	Not Used	Not Used
PAL	———	See Next Page	Not Used	Not Used

SCHEMATIC DIAGRAM [FOR AU-665]

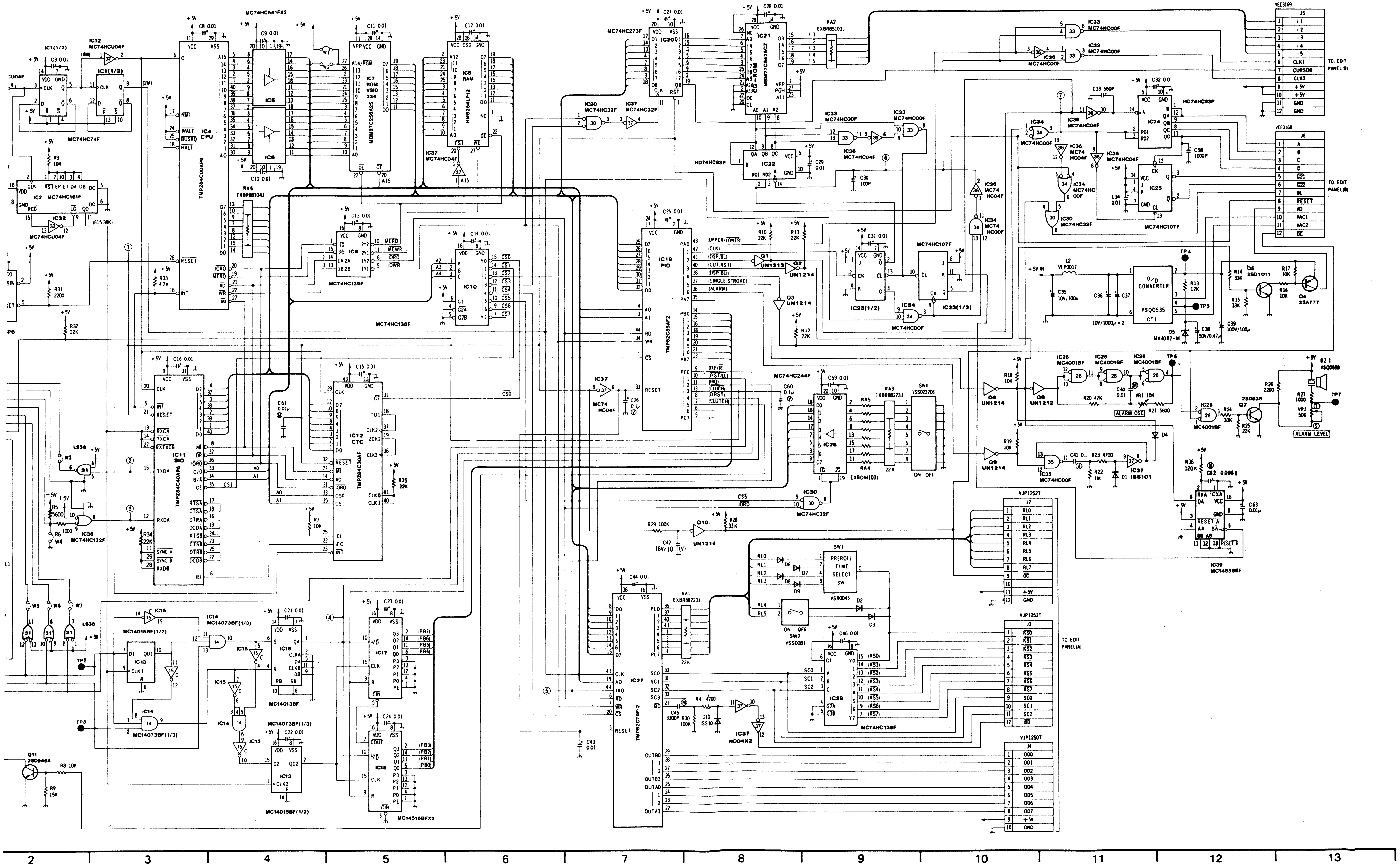

IC1(1/2)
MC74HC74F
IC32 MC74HCU04F
IC2 MC74HC161F
IC4 CPU TMPZ84C00AP6
MC74HC541FX2
IC5
IC6
IC7 ROM VSIO 334
MBM27C256A25
IC8 RAM
HM6264LP12
IC37 MC74HC04F
RA6 EXBR8B104J
IC9 MC74HC139F
IC10 MC74HC138F
MC74HC273F
IC20
IC21
MBM27C64-25CZ
RA2 EXBR8S103J
IC30 MC74HC32F
IC22 HD74HC93P
IC33 MC74HC00F
IC36 MC74HC04F
IC19 PIO TMP82C55AF2
Q1 UN1213
Q2 UN1214
Q3 UN1214
IC23(1/2) MC74HC107F
IC34 MC74HC00F
IC11 SIO TMPZ84C40AP6
IC12 CTC TMPZ84C30AF
IC28 MC74HC244F
RA3 EXBR8B223J
RA4 EXC44103J
SW4 VSS023708
ON OFF
IC24 HD74HC93P
IC25 MC74HC107F
J5 VEE3169
CLK1
CURSOR
CLK2
+5V
GND
TO EDIT PANEL(B)
J6 VEE3168
A B C D G21 G22 BL RESET VD VAC1 VAC2 DC
L2 VLP0017
D/D CONVERTER VSQ0535 CT1
TP4 TP5 TP6 TP7
Q5 2SD1011
Q4 2SA777
D5 MA4082-M
IC26 MC4001BF
Q6 UN1214
Q8 UN1212
Q9 UN1214
ALARM OSC
ALARM LEVEL
BZ1 VSQ0598
Q7 2SD636
IC35 MC74HC00F
IC37 1SS101
IC39 MC14538BF
J2 VJP1252T
RL0 RL1 RL2 RL3 RL4 RL5 RL6 RL7
J3 VJP1252T
TO EDIT PANEL(A)
J4 VJP1250T
Q10 UN1214
SW1 PREROLL TIME SELECT SW VSR0045
SW2 VSS0081
IC27 TMP82C79F-2
RA1 EXBR8B223J
IC29 MC74HC138F
IC37 HC04X2
IC15
IC14 MC14073BF(1/3)
IC13 MC14015BF(1/2)
IC16 MC14013BF
IC17
IC18 MC14516BFX2
Q11 2SD946A
TP2 TP3
LS38
IC38 MC74HC132F
W1 W2 W3 W4 W5 W6 W7
2 3 4 5 6 7 8 9 10 11 12 13

MODEL / TYPE	AU-665	AU-65	AU-63	AU-62
NTSC	See Front Page	VEP86048F	Not Used	Not Used
PAL	———	VEP86048G	Not Used	Not Used

FRONT PANEL C SCHEMATIC DIAGRAM[FOR AU-65]

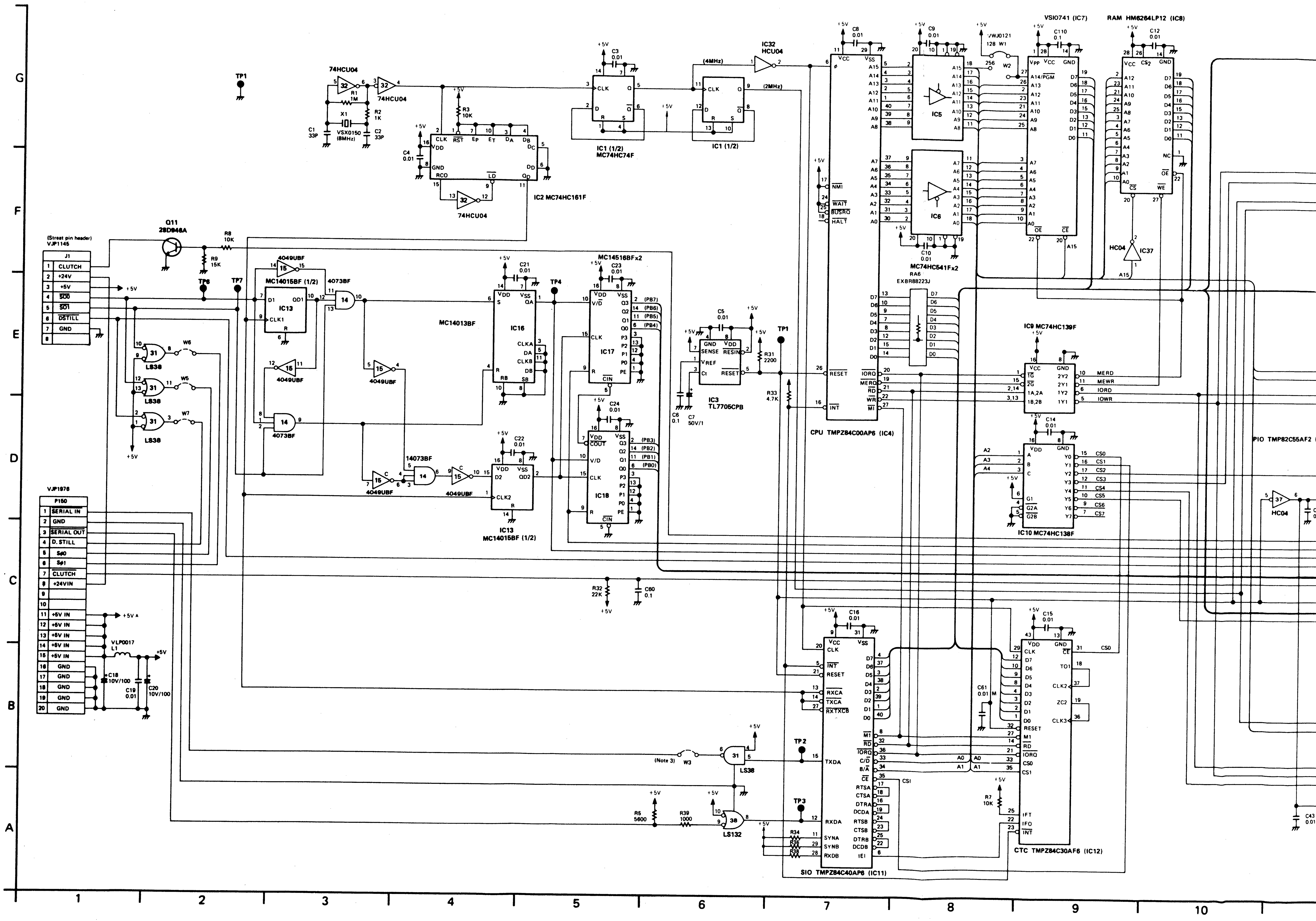

G
F
E
D
C
B
A
1
2
3
4
5
6
7
8
9
10
TP1
74HCU04
X1 VSX0150 (8MHz)
IC2 MC74HC161F
IC1 (1/2) MC74HC74F
IC32 HCU04
(4MHz)
(2MHz)
IC5
IC6
MC74HC541Fx2
RA6 EXBR8823J
VWJ0121 128 W1
256 W2
VSI0741 (IC7)
RAM HM6264LP12 (IC8)
HC04 IC37
Q11 2SD948A
(Street pin header) VJP1145
J1
CLUTCH
+24V
+5V
S00
S01
DSTILL
GND
4049UBF
MC14015BF (1/2)
IC13
4073BF
LS38
W5
W6
W7
TP6
TP7
MC14013BF
IC16
MC14516BFx2
IC17
IC18
TP4
IC13 MC14015BF (1/2)
14073BF
IC3 TL7705CPB
TP1
CPU TMPZ84C00AP6 (IC4)
IC9 MC74HC139F
IC10 MC74HC138F
MERD
MEWR
IORD
IOWR
CS0
CS1
CS2
CS3
CS4
CS5
CS6
CS7
PIO TMP82C55AF2
HC04
VJP1976
P150
SERIAL IN
GND
SERIAL OUT
D. STILL
S00
S01
CLUTCH
+24VIN
+5V IN
VLP0017 L1
C18 10V/100
C19 0.01
C20 10V/100
R32 22K
C60 0.1
(Note 3) W3
LS38
TP2
TP3
LS132
SIO TMPZ84C40AP6 (IC11)
CTC TMPZ84C30AF6 (IC12)

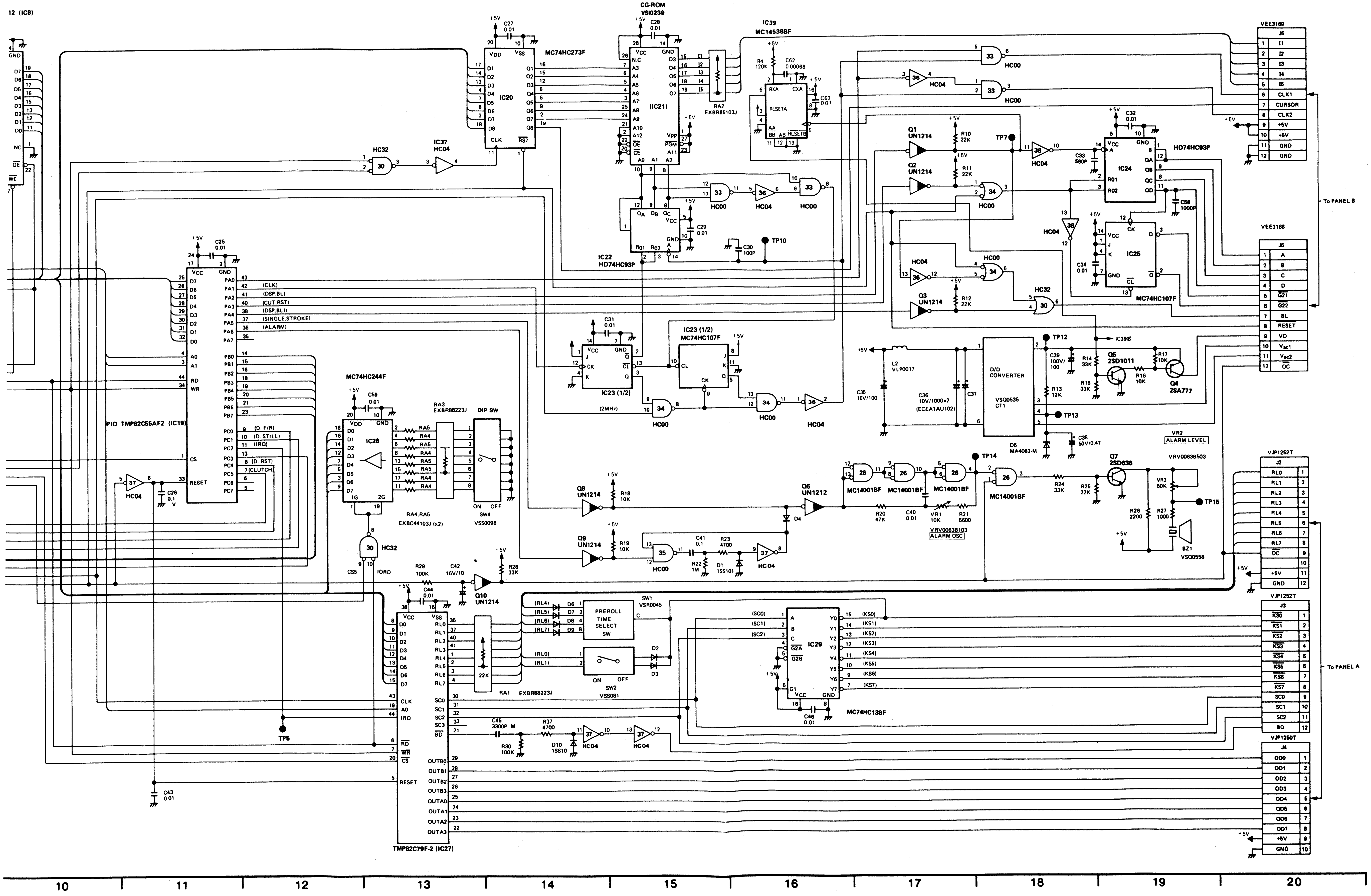

12 (IC8)
MC74HC273F
IC20
CG-ROM
VSI0239
(IC21)
EXBR85103J
IC39
MC14538BF
VEE3169
J5
CLK1
CURSOR
CLK2
+5V
GND
To PANEL B
HC00
HC04
HC32
HC37
IC22
HD74HC93P
TP10
TP7
Q1 UN1214
Q2 UN1214
Q3 UN1214
IC24
HD74HC93P
IC25
MC74HC107F
VEE3168
J6
RESET
VD
BL
PIO TMP82C55AF2 (IC19)
(CLK)
(DSP.BL)
(CUT.RST)
(DSP.BLI)
(SINGLE STROKE)
(ALARM)
(D. F/R)
(D. STILL)
(IRQ)
(D. RST)
(CLUTCH)
IC23 (1/2)
MC74HC107F
(2MHz)
MC74HC244F
IC28
RA3 EXBR88223J
DIP SW
SW4 VSS0098
RA4,RA5 EXBC44103J (x2)
D/D CONVERTER
VSS0535 CT1
L2 VLP0017
TP12
TP13
TP14
TP15
TP5
Q5 2SD1011
Q4 2SA777
Q7 2SD636
Q6 UN1212
Q8 UN1214
Q9 UN1214
Q10 UN1214
D5 MA4082-M
VR2 ALARM LEVEL
VRV00638503
VR1
VRV00638103 ALARM OSC
MC14001BF
BZ1 VSQ0558
VJP1252T
J2
VJP1252T
J3
To PANEL A
VJP1250T
J4
PRESET TIME SELECT SW
SW1 VSR0045
SW2 VSS081
RA1 EXBR88223J
IC29
MC74HC138F
TMP82C79F-2 (IC27)
10
11
12
13
14
15
16
17
18
19
20

FRONT PANEL C SCHEMATIC DIAGRAM[FOR AU-63,AU-62]

MODEL / TYPE	AU-665	AU-65	AU-63	AU-62
NTSC	VEP66053E	VEP86048F	Not Used	Not Used
PAL	VEP86048H	VEP86048G	Not Used	Not Used

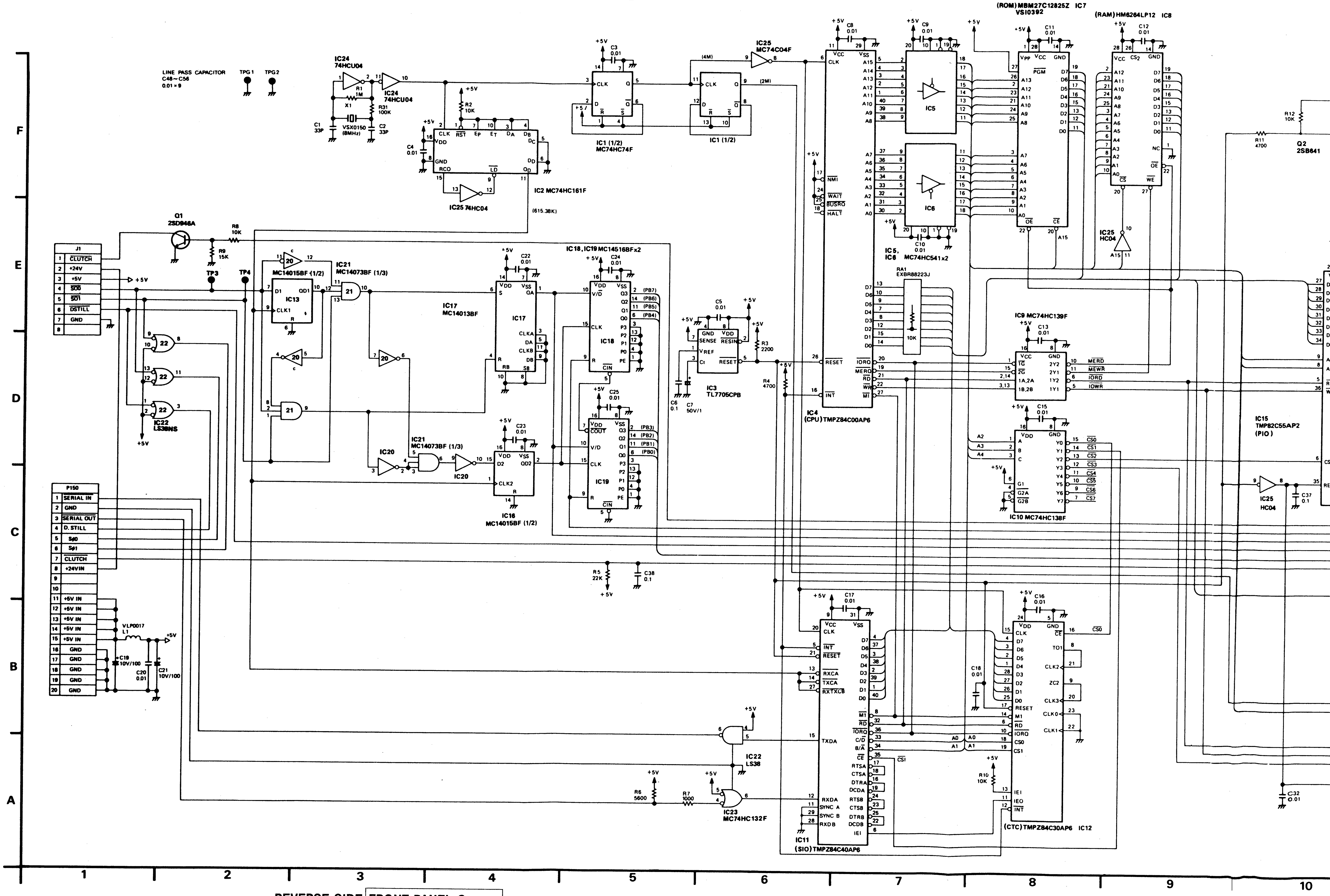
LINE PASS CAPACITOR C48~C56 0.01×9
TPG1
TPG2
IC24 74HCU04
R1 1M
X1
VSX0150 (8MHz)
R31 100K
C1 33P
C2 33P
IC2 MC74HC161F
(615.38K)
IC25 74HC04
IC1 (1/2) MC74HC74F
IC1 (1/2)
(4M)
(2M)
IC25 MC74C04F
(ROM) MBM27C12825Z IC7 VS10392
(RAM) HM6264LP12 IC8
IC5
IC6
IC5, IC6 MC74HC541×2
C10 0.01
RA1 EXBR88223J
10K
IC25 HC04
A15
Q1 2SD946A
R8 10K
R9 15K
J1
CLUTCH
+24V
+5V
SØ0
SØ1
DSTILL
GND
TP3
TP4
IC20 MC14015BF (1/2)
IC13
IC21 MC14073BF (1/3)
IC17 MC14013BF
IC18, IC19 MC14516BF×2
IC18
IC19
(PB7) (PB6) (PB5) (PB4)
(PB3) (PB2) (PB1) (PB0)
IC16 MC14015BF (1/2)
IC22 LS38NS
IC3 TL7705CPB
R3 2200
R4 4700
C6 0.1
C7 50V/1
C5 0.01
IC4 (CPU) TMPZ84C00AP6
NMI
WAIT
BUSRQ
HALT
RESET
INT
IORQ
MERQ
RD
WR
M1
IC9 MC74HC139F
MERD
MEWR
IORD
IOWR
IC10 MC74HC138F
CS0 CS1 CS2 CS3 CS4 CS5 CS6 CS7
R12 10K
R11 4700
Q2 2SB641
IC15 TMP82C55AP2 (PIO)
IC25 HC04
C37 0.1
C32 0.01
P150
SERIAL IN
GND
SERIAL OUT
D. STILL
SØ0
SØ1
CLUTCH
+24VIN
+5V IN
VLP0017 L1
C19 10V/100
C20 0.01
C21 10V/100
R5 22K
C38 0.1
C17 0.01
IC11 (SIO) TMPZ84C40AP6
RXCA
TXCA
RXTXCB
TXDA
RXDA
SYNC A
SYNC B
RXDB
C16 0.01
C18 0.01
IC12 (CTC) TMPZ84C30AP6
TO1
CLK2
ZC2
CLK3
CLK0
CLK1
IEI
IEO
R10 10K
IC22 LS38
IC23 MC74HC132F
R6 5600
R7 1000
F
E
D
C
B
A
1 2 3 4 5 6 7 8 9 10

REVERSE SIDE FRONT PANEL C SCHEMATIC DIAGRAM

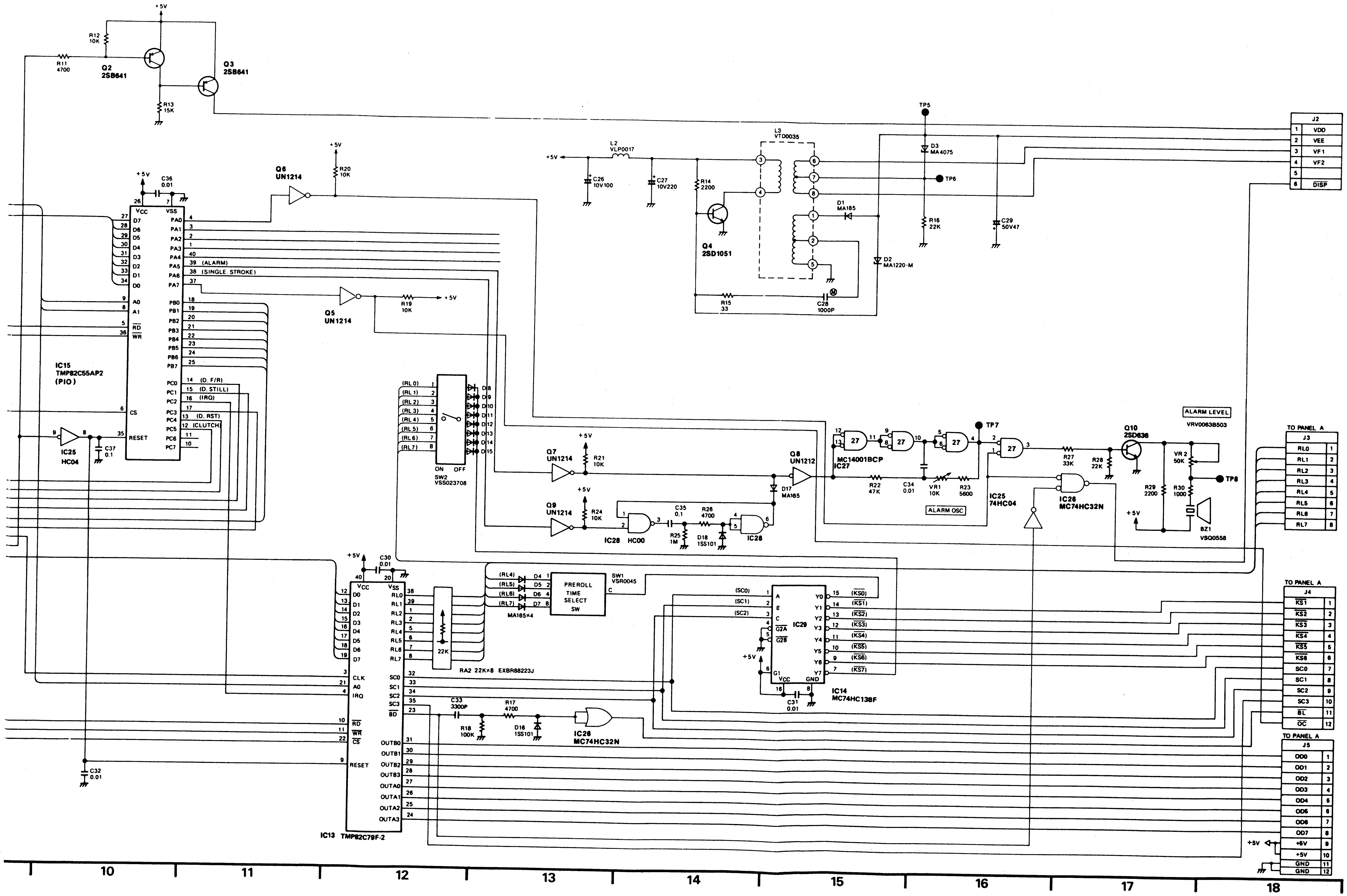
+5V
R12 10K
R11 4700
Q2 2SB641
Q3 2SB641
R13 15K
TP5
J2
VDD
VEE
VF1
VF2
DISP
L3 VT00035
L2 VLP0017
C26 10V100
C27 10V220
R14 2200
Q4 2SD1051
D3 MA4075
TP6
D1 MA185
R16 22K
C29 50V47
D2 MA1220-M
R19 10K
R15 33
C28 1000P
Q6 UN1214
R20 10K
Q5 UN1214
C36 0.01
IC15 TMP82C55AP2 (PIO)
(ALARM)
(SINGLE STROKE)
(D. F/R)
(D. STILL)
(IRQ)
(D. RST)
(CLUTCH)
RESET
IC25 HC04
C37 0.1
SW2 VSS023708
ON OFF
TP7
MC14001BCP IC27
Q7 UN1214
R21 10K
Q8 UN1212
D17 MA165
Q9 UN1214
R24 10K
IC28 HC00
C35 0.1
R26 4700
R25 1M
D18 1SS101
R22 47K
C34 0.01
VR1 10K
R23 5600
ALARM OSC
IC25 74HC04
IC26 MC74HC32N
R27 33K
R28 22K
Q10 2SD636
ALARM LEVEL
VRV0063B503
VR2 50K
TP8
R29 2200
R30 1000
BZ1 VSQ0558
TO PANEL A
J3
RL0
RL1
RL2
RL3
RL4
RL5
RL6
RL7
C30 0.01
IC13 TMP82C79F-2
RA2 22K×8 EXBR88223J
22K
D4 D5 D6 D7
MA165×4
PREROLL TIME SELECT SW
SW1 VSR0045
IC29
IC14 MC74HC138F
C31 0.01
(KS0) (KS1) (KS2) (KS3) (KS4) (KS5) (KS6) (KS7)
(SC0) (SC1) (SC2)
C33 3300P
R17 4700
R18 100K
D16 1SS101
IC26 MC74HC32N
C32 0.01
J4
KS1 KS2 KS3 KS4 KS5 KS6 SC0 SC1 SC2 SC3 BL OC
J5
OD0 OD1 OD2 OD3 OD4 OD5 OD6 OD7 +5V +5V GND GND
10 11 12 13 14 15 16 17 18

MODEL / TYPE	AU-665	AU-65	AU-63	AU-62
NTSC	VEP80613A	See Next Page		
PAL	VEP80613B			

FRONT SW & VR SCHEMATIC DIAGRAM[FOR AU-665]

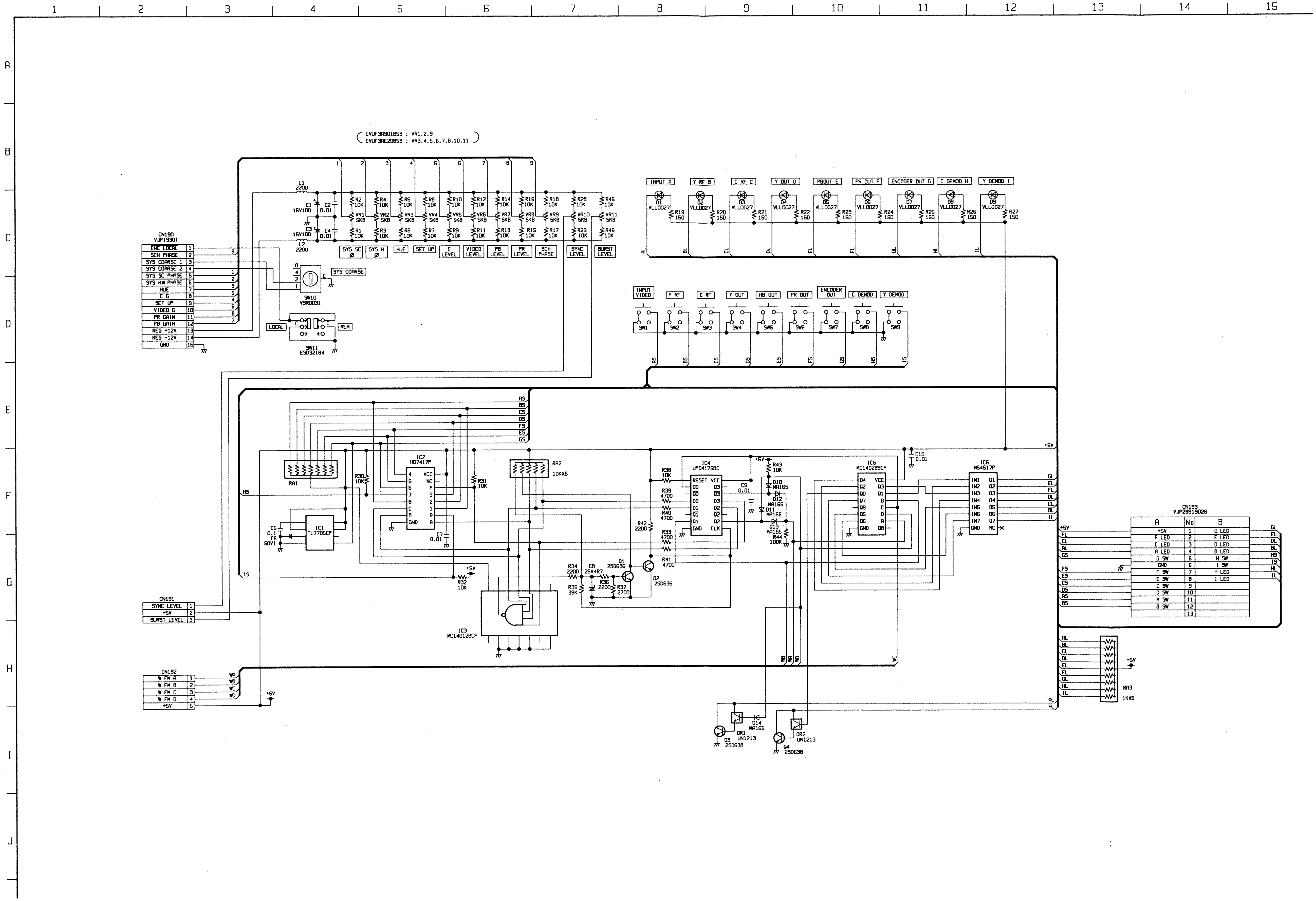

1
2
3
4
5
6
7
8
9
10
11
12
13
14
15
A
B
C
D
E
F
G
H
I
J
EVUF3AS01B53 : VR1,2,9
EVUF3AE20B53 : VR3,4,5,6,7,8,10,11
CN190
VJP1930T
ENC LOCAL 1
SCH PHASE 2
SYS COARSE 1 3
SYS COARSE 2 4
SYS SC PHASE 5
SYS HØ PHASE 6
HUE 7
C G 8
SET UP 9
VIDEO G 10
PR GAIN 11
PB GAIN 12
REG +12V 13
REG -12V 14
GND 15
L1 220U
L2 220U
C1 16V100
C2 0.01
C3 16V100
C4 0.01
R2 10K
VR1 5KB
R1 10K
R4 10K
VR2 5KB
R3 10K
R6 10K
VR3 5KB
R5 10K
R8 10K
VR4 5KB
R7 10K
R10 10K
VR5 5KB
R9 10K
R12 10K
VR6 5KB
R11 10K
R14 10K
VR7 5KB
R13 10K
R16 10K
VR8 5KB
R15 10K
R18 10K
VR9 5KB
R17 10K
R28 10K
VR10 5KB
R29 10K
R45 10K
VR11 5KB
R46 10K
SYS SC Ø
SYS H Ø
HUE
SET UP
C LEVEL
VIDEO LEVEL
PB LEVEL
PR LEVEL
SCH PHASE
SYNC LEVEL
BURST LEVEL
SYS COARSE
SW10
VSR0031
LOCAL
REM
SW11
ESD32184
INPUT A
Y RF B
C RF C
Y OUT D
PBOUT E
PR OUT F
ENCODER OUT G
C DEMOD H
Y DEMOD I
D1 VLL0027
D2 VLL0027
D3 VLL0027
D4 VLL0027
D5 VLL0027
D6 VLL0027
D7 VLL0027
D8 VLL0027
D9 VLL0027
R19 150
R20 150
R21 150
R22 150
R23 150
R24 150
R25 150
R26 150
R27 150
INPUT VIDEO
Y RF
C RF
Y OUT
HB OUT
PR OUT
ENCODER OUT
C DEMOD
Y DEMOD
SW1
SW2
SW3
SW4
SW5
SW6
SW7
SW8
SW9
AS
BS
CS
DS
ES
FS
GS
HS
IS
RA1
R30 10K
IC2
HD7417P
R31 10K
IC1
TL7705CP
C5 0.1
C6 50V1
C7 0.01
+5V
R32 10K
RA2
10KX5
IC3
MC14012BCP
IC4
UPD4175BC
RESET VCC
R38 10K
R39 4700
R40 4700
R42 2200
R33 4700
R41 4700
C9 0.01
+5V
R43 10K
D10 MA165
D12 MA165
D11 MA165
D13 MA165
R44 100K
R34 2200
C8 25V4R7
R35 39K
R36 2200
R37 2700
Q1 2SD636
Q2 2SD636
IC5
MC14028BCP
C10 0.01
IC6
MS4517P
CN191
SYNC LEVEL 1
+5V 2
BURST LEVEL 3
CN192
W FM A 1
W FM B 2
W FM C 3
W FM D 4
+5V 5
WA
WB
WC
WD
QR1 UN1213
D14 MA165
Q3 2SD638
QR2 UN1213
Q4 2SD638
CN193
VJP28918026
A
No
B
+5V 1 G LED
F LED 2 E LED
C LED 3 D LED
A LED 4 B LED
G SW 5 H SW
GND 6 I SW
F SW 7 H LED
E SW 8 I LED
C SW 9
D SW 10
A SW 11
B SW 12
13
AL
BL
CL
DL
EL
FL
GL
HL
IL
RA3
1KX9

FRONT SW

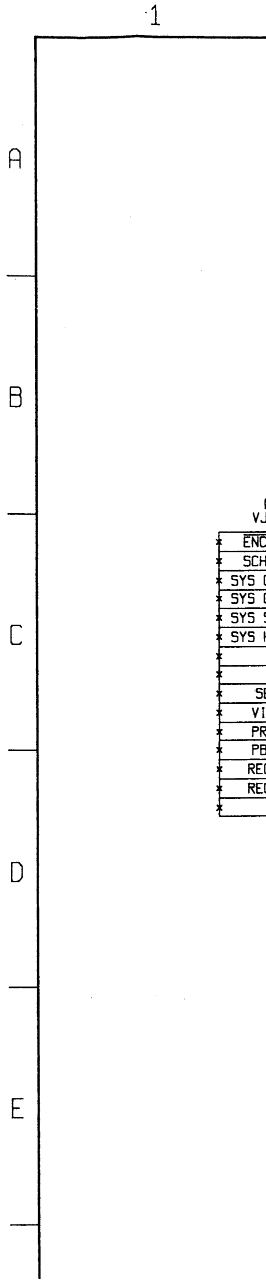

MODEL / TYPE	AU-665	AU-65	AU-63	AU-62
NTSC	VEP80613A	See Next Page		
PAL	VEP80613B			

65]

7 8 9 10 11 12 13 14 15

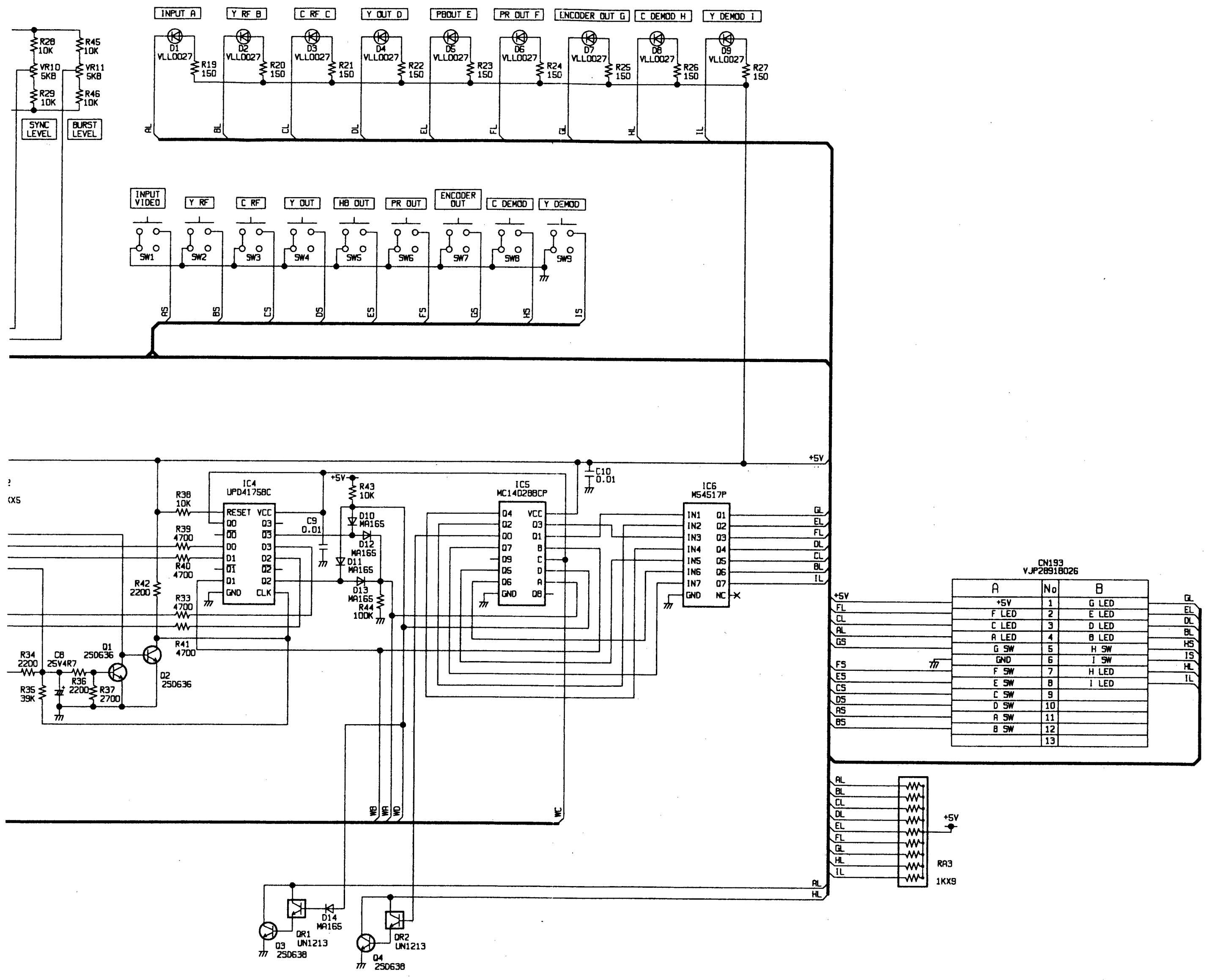

R28 10K
R45 10K
VR10 5KB
VR11 5KB
R29 10K
R46 10K
SYNC LEVEL
BURST LEVEL
INPUT A
Y RF B
C RF C
Y OUT D
PBOUT E
PR OUT F
ENCODER OUT G
C DEMOD H
Y DEMOD I
D1 VLL0027
D2 VLL0027
D3 VLL0027
D4 VLL0027
D5 VLL0027
D6 VLL0027
D7 VLL0027
D8 VLL0027
D9 VLL0027
R19 150
R20 150
R21 150
R22 150
R23 150
R24 150
R25 150
R26 150
R27 150
AL
BL
CL
DL
EL
FL
GL
HL
IL
INPUT VIDEO
Y RF
C RF
Y OUT
HB OUT
PR OUT
ENCODER OUT
C DEMOD
Y DEMOD
SW1
SW2
SW3
SW4
SW5
SW6
SW7
SW8
SW9
AS
BS
CS
DS
ES
FS
GS
HS
IS
+5V
IC4 UPD4175BC
RESET VCC
Q0 Q3
D0 D3
D1 D2
GND CLK
R38 10K
R39 4700
R40 4700
R42 2200
R33 4700
R41 4700
C9 0.01
R43 10K
D10 MA165
D12 MA165
D11
D13 MA165
R44 100K
IC5 MC14028BCP
D4 VCC
IC6 M54517P
IN1 O1
IN2 O2
IN3 O3
IN4 O4
IN5 O5
IN6 O6
IN7 O7
GND NC
C10 0.01
R34 2200
C8 25V4R7
R36 2200
R37 2700
R35 39K
Q1 2SD636
Q2 2SD636
CN193 VJP28918026
RA3 1KX9
D14 MA165
QR1 UN1213
QR2 UN1213
Q3 2SD638
Q4 2SD638

CN193 VJP28918026

A	No	B
+5V	1	G LED
F LED	2	E LED
C LED	3	D LED
A LED	4	B LED
G SW	5	H SW
GND	6	I SW
F SW	7	H LED
E SW	8	I LED
C SW	9	
D SW	10	
A SW	11	
B SW	12	
	13	

FRONT
SCHEM

FRONT SW & VR SCHEMATIC DIAGRAM [FOR AU-65,AU-63,AU-

1 2 3 4 5

A
B
C
D
E

MODEL / TYPE	AU-665	AU-65	AU-63
NTSC	See Front Page	VEP80552A	VEP80552A
PAL	See Front Page	VEP80552A	VEP80552A

(EVUF3AS01B53 ; VR1,2,9
EVUF3AE20B53 ; VR3,4,5,6,7,8)

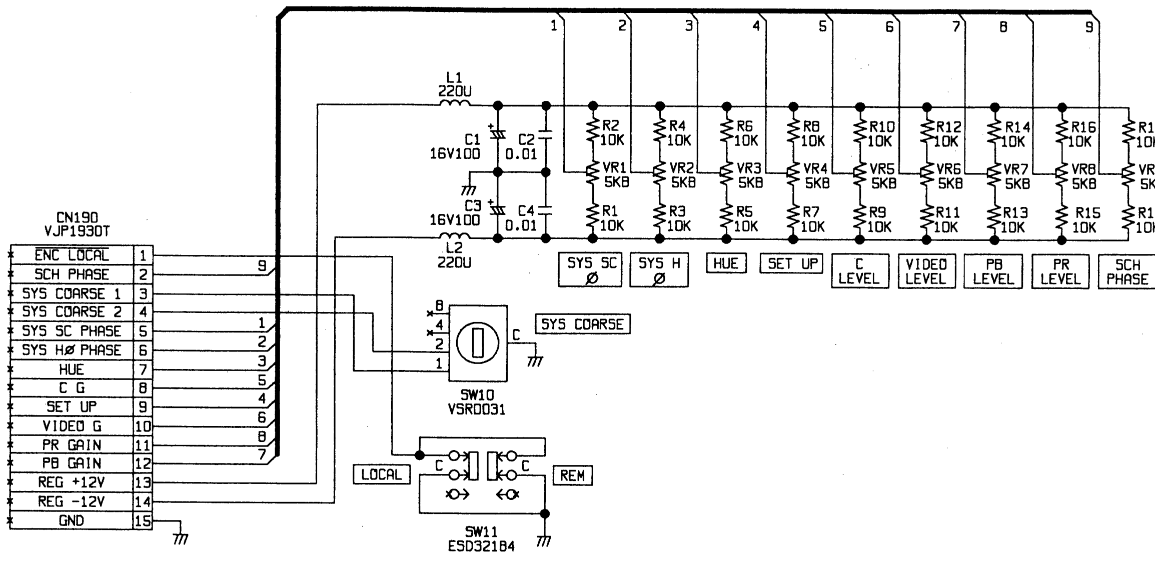

L1 220U
C1 16V100
C2 0.01
C3 16V100
C4 0.01
L2 220U
R2 10K
R4 10K
R6 10K
R8 10K
R10 10K
R12 10K
R14 10K
R16 10K
VR1 5KB
VR2 5KB
VR3 5KB
VR4 5KB
VR5 5KB
VR6 5KB
VR7 5KB
VR8 5KB
R1 10K
R3 10K
R5 10K
R7 10K
R9 10K
R11 10K
R13 10K
R15 10K
SYS SC Ø
SYS H Ø
HUE
SET UP
C LEVEL
VIDEO LEVEL
PB LEVEL
PR LEVEL
SCH PHASE
CN190 VJP1930T
ENC LOCAL
SCH PHASE
SYS COARSE 1
SYS COARSE 2
SYS SC PHASE
SYS HØ PHASE
HUE
C G
SET UP
VIDEO G
PR GAIN
PB GAIN
REG +12V
REG -12V
GND
SYS COARSE
SW10 VSR0031
LOCAL
REM
SW11 ESD32184

REVERSE SIDE | MECHA INTERFACE SCHEMATI
POWER FILTER SCHEMATIC D

MODEL / TYPE	AU-665	AU-65	AU-63	AU-62
NTSC	VEP80550A	VEP80550A	VEP80550A	VEP80550A
PAL	VEP80550A	VEP80550A	VEP80550A	VEP80550A

MECHA INTERFACE SCHEMATIC DIAGRAM

POWE

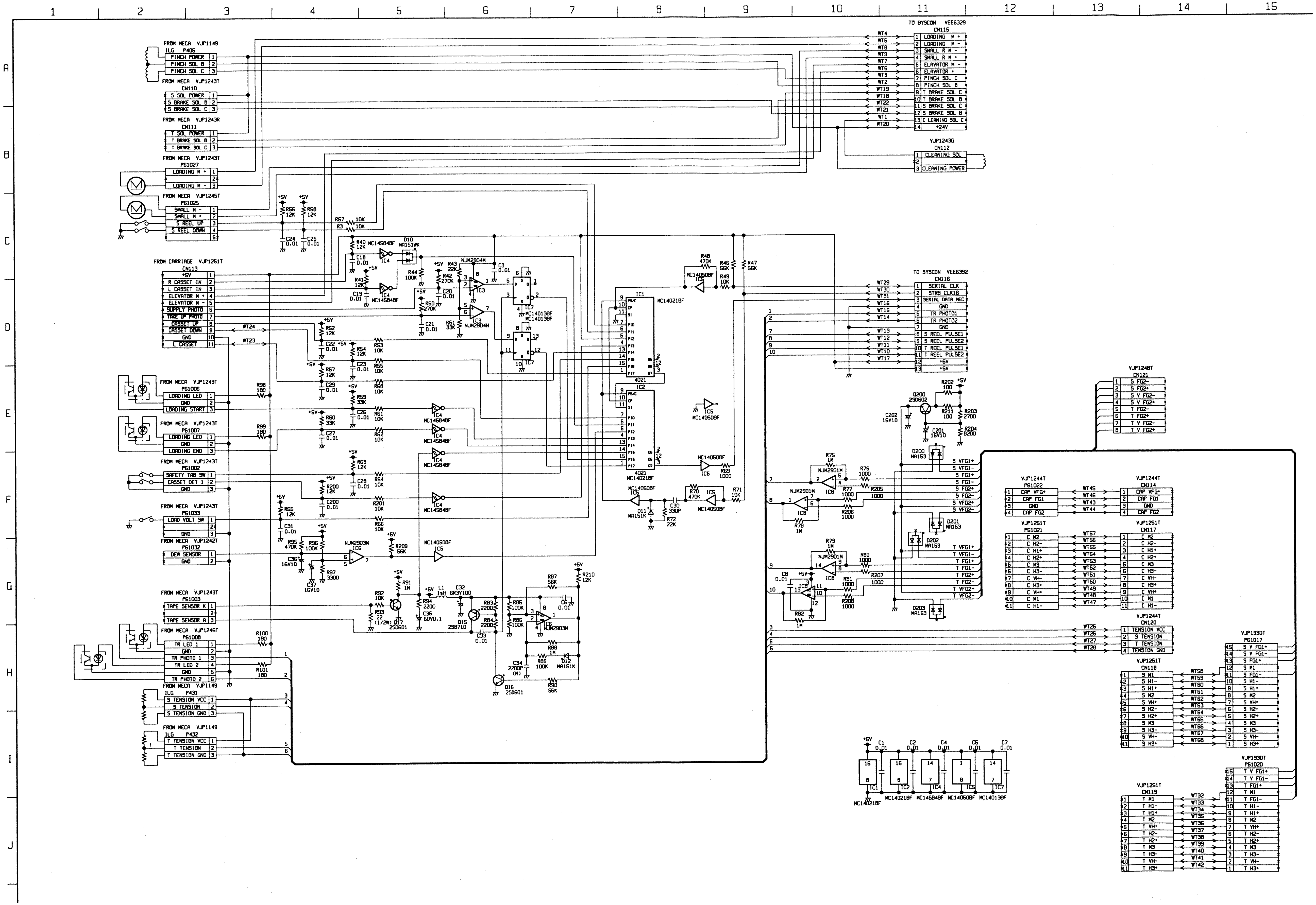

1
2
3
4
5
6
7
8
9
10
11
12
13
14
15
A
B
C
D
E
F
G
H
I
J
FROM MECA VJP1149
ILG P405
PINCH POWER
PINCH SOL B
PINCH SOL C
FROM MECA VJP1243T
CN110
S SOL POWER
S BRAKE SOL B
S BRAKE SOL C
FROM MECA VJP1243R
CN111
T SOL POWER
T BRAKE SOL B
T BRAKE SOL C
FROM MECA VJP1243T
P61027
LOADING M +
LOADING M -
FROM MECA VJP1245T
P61025
SMALL M -
SMALL M +
S REEL UP
S REEL DOWN
FROM CARRIAGE VJP1251T
CN113
+5V
R CASSET IN
L CASSET IN
ELEVATOR M +
ELEVATOR M -
SUPPLY PHOTO
TAKE UP PHOTO
CASSET UP
CASSET DOWN
GND
L CASSET
FROM MECA VJP1243T
P61006
LOADING LED
GND
LOADING START
FROM MECA VJP1243T
P61007
LOADING LED
GND
LOADING END
FROM MECA VJP1243T
P61002
SAFETY TAB SW
CASSET DET 1
GND
FROM MECA VJP1243T
P61033
LOAD VOLT SW
GND
FROM MECA VJP1242T
P61032
DEW SENSOR
GND
FROM MECA VJP1243T
P61003
TAPE SENSOR K
TAPE SENSOR R
FROM MECA VJP1246T
P61008
TR LED 1
GND
TR PHOTO 1
TR LED 2
GND
TR PHOTO 2
FROM MECA VJP1149
ILG P431
S TENSION VCC
S TENSION
S TENSION GND
FROM MECA VJP1149
ILG P432
T TENSION VCC
T TENSION
T TENSION GND
TO SYSCON VEE6329
CN115
LOADING M +
LOADING M -
SMALL R M -
SMALL R M +
ELEVATOR M -
ELEVATOR +
PINCH SOL C
PINCH SOL B
T BRAKE SOL C
T BRAKE SOL B
S BRAKE SOL C
S BRAKE SOL B
CLEANING SOL C
+24V
VJP1243G
CN112
CLEANING SOL
CLEANING POWER
TO SYSCON VEE6392
CN116
SERIAL CLK
STRB CLK16
SERIAL DATA MEC
GND
TR PHOTO1
TR PHOTO2
GND
S REEL PULSE1
S REEL PULSE2
T REEL PULSE1
T REEL PULSE2
+5V
+5V
WT1
WT2
WT3
WT4
WT5
WT6
WT7
WT8
WT9
WT10
WT11
WT12
WT13
WT14
WT15
WT16
WT17
WT18
WT19
WT20
WT21
WT22
WT23
WT24
WT29
WT30
WT31
IC1
MC14021BF
4021
IC2
MC14021BF
IC3
NJM2904M
IC4
MC14584BF
IC5
MC14050BF
IC6
NJM2903M
IC7
MC14013BF
IC8
NJM2901M
D10
MA151WK
D11
MA151K
D12
MA151K
D15
2SB710
D16
2SD601
D17
2SD601
Q200
2SD602
D200
MA153
D201
MA153
D202
MA153
D203
MA153
L1
1mH
R3 10K
R40 12K
R41 12K
R42 270K
R43 22K
R44 100K
R46 56K
R47 56K
R48 470K
R49 10K
R50 270K
R51 33K
R52 12K
R53 10K
R54 12K
R55 10K
R56 12K
R57 10K
R58 12K
R59 33K
R60 33K
R61 10K
R62 10K
R63 12K
R64 10K
R65 12K
R66 10K
R67 12K
R68 10K
R69 1000
R70 470K
R71 10K
R72 22K
R75 1M
R76 1000
R77 1000
R78 1M
R79 1M
R80 1000
R81 1000
R82 1M
R83 2200
R84 2200
R85 100K
R86 100K
R87 56K
R88 1M
R89 100K
R90 56K
R91 1M
R92 10K
R93 22 (1/2W)
R94 2200
R95 470K
R96 100K
R97 3300
R98 180
R99 180
R100 180
R101 180
R200 12K
R201 10K
R202 100
R203 2700
R204 8200
R205 1000
R206 1000
R207 1000
R208 1000
R209 56K
R210 12K
R211 100
C1 0.01
C2 0.01
C3 0.01
C4 0.01
C5 0.01
C6 0.01
C7 0.01
C8 0.01
C18 0.01
C19 0.01
C20 0.01
C21 0.01
C22 0.01
C23 0.01
C24 0.01
C25 0.01
C26 0.01
C27 0.01
C28 0.01
C29 0.01
C30 330P
C31 0.01
C32 6R3V100
C33 0.01
C34 2200P (M)
C35 50V0.1
C36 16V10
C37 16V10
C200 0.01
C201 16V10
C202 16V10
+5V
VJP1248T
CN121
S FG2-
S FG2+
S V FG2-
S V FG2+
T FG2-
T FG2+
T V FG2-
T V FG2+
S VFG1+
S VFG1-
S FG1+
S FG1-
S FG2+
S FG2-
S VFG2+
S VFG2-
T VFG1+
T VFG1-
T FG1+
T FG1-
T FG2+
T FG2-
T VFG2+
T VFG2-
VJP1244T
P61022
CAP VFG+
CAP FG1
GND
CAP FG2
VJP1244T
CN114
CAP VFG+
CAP FG1
GND
CAP FG2
WT43
WT44
WT45
WT46
VJP1251T
P61021
VJP1251T
CN117
C H2
C H2-
C H1+
C H2+
C H3
C H3-
C VH-
C H3+
C VH+
C H1
C H1-
WT47
WT48
WT49
WT50
WT51
WT52
WT53
WT54
WT55
WT56
WT57
VJP1244T
CN120
TENSION VCC
S TENSION
T TENSION
TENSION GND
WT25
WT26
WT27
WT28
VJP1251T
CN118
S H1
S H1-
S H1+
S H2
S VH+
S H2-
S H2+
S H3
S H3-
S VH-
S H3+
WT58
WT59
WT60
WT61
WT62
WT63
WT64
WT65
WT66
WT67
WT68
VJP1930T
P61017
S V FG1+
S V FG1-
S FG1+
S H1
S FG1-
VJP1930T
P61020
T V FG1+
T V FG1-
T FG1+
T H1
T FG1-
VJP1251T
CN119
T H1
T H1-
T H1+
T H2
T VH+
T H2-
T H2+
T H3
T H3-
T VH-
T H3+
WT32
WT33
WT34
WT35
WT36
WT37
WT38
WT39
WT40
WT41
WT42
MC14021BF
MC14021BF
MC14584BF
MC14050BF
MC14013BF

AU-65	AU-63	AU-62
VEP80550A	VEP80550A	VEP80550A
VEP80550A	VEP80550A	VEP80550A

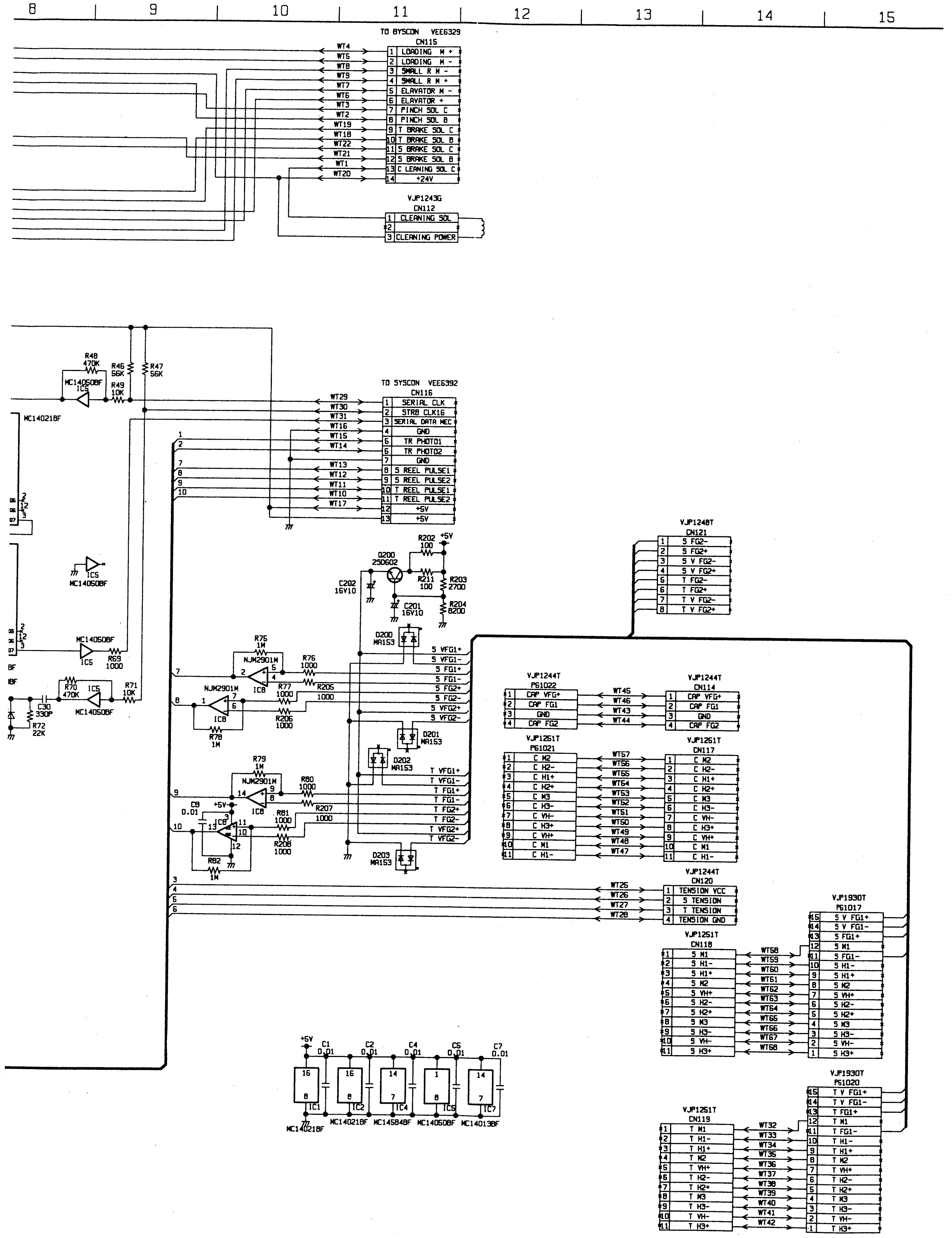

8
9
10
11
12
13
14
15
TO SYSCON VEE6329
CN115
LOADING M +
LOADING M -
SMALL R M -
SMALL R M +
ELAVATOR M -
ELAVATOR +
PINCH SOL C
PINCH SOL B
T BRAKE SOL C
T BRAKE SOL B
S BRAKE SOL C
S BRAKE SOL B
C LEANING SOL C
+24V
VJP1243G
CN112
CLEANING SOL
CLEANING POWER
TO SYSCON VEE6392
CN116
SERIAL CLK
STRB CLK16
SERIAL DATA MEC
GND
TR PHOTO1
TR PHOTO2
S REEL PULSE1
S REEL PULSE2
T REEL PULSE1
T REEL PULSE2
+5V
MC14021BF
MC14050BF
NJM2901M
VJP1248T
CN121
S FG2-
S FG2+
S V FG2-
S V FG2+
T FG2-
T FG2+
T V FG2-
T V FG2+
VJP1244T
PG1022
CN114
CAP VFG+
CAP FG1
CAP FG2
VJP1251T
PG1021
CN117
C H2
C H2-
C H1+
C H2+
C H3
C H3-
C VH-
C H3+
C VH+
C H1
C H1-
VJP1244T
CN120
TENSION VCC
S TENSION
T TENSION
TENSION GND
VJP1930T
PG1017
CN118
S V FG1+
S V FG1-
S FG1+
S H1
S FG1-
S H1-
S H1+
S H2
S VH+
S H2-
S H2+
S H3
S H3-
S VH-
S H3+
VJP1930T
PG1020
CN119
T V FG1+
T V FG1-
T FG1+
T H1
T FG1-
T H1-
T H1+
T H2
T VH+
T H2-
T H2+
T H3
T H3-
T VH-
T H3+
MC14021BF
MC14584BF
MC14050BF
MC14013BF

POWER FILTER SCHEMATIC DIAGRAM

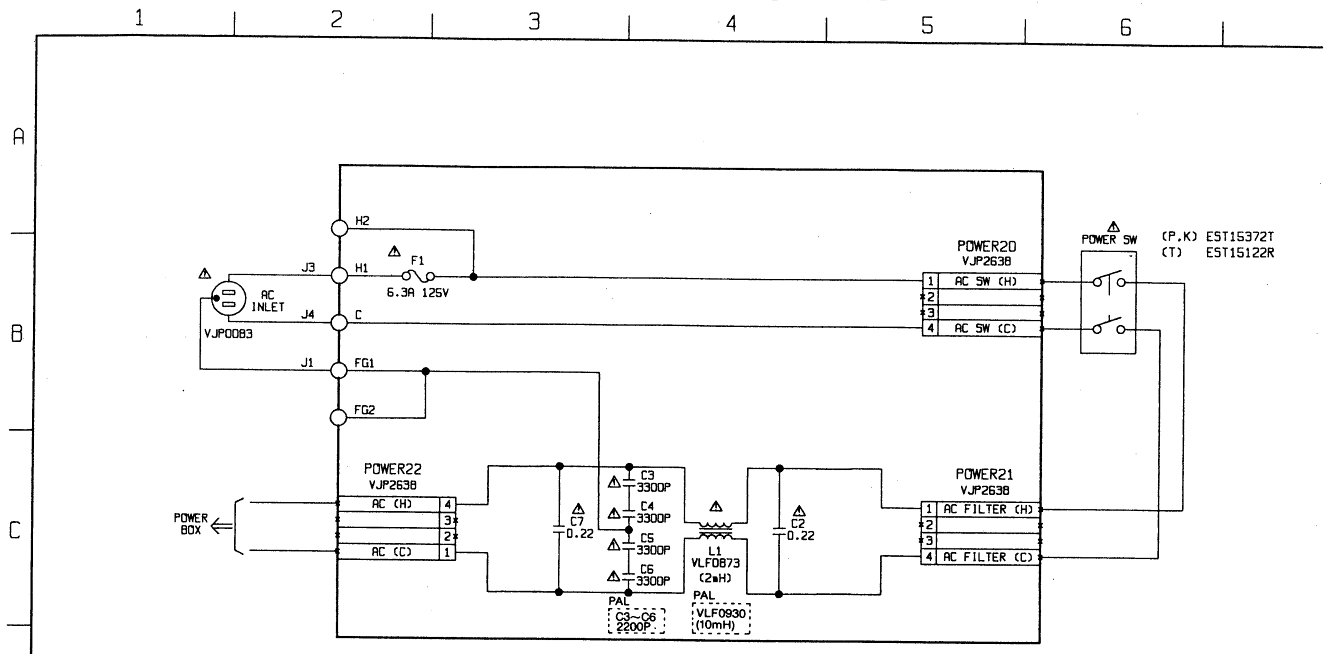

1
2
3
4
5
6
A
B
C
D
E
AC INLET
VJP0083
J3
J4
J1
H1
H2
C
FG1
FG2
F1
6.3A 125V
POWER20
VJP2638
AC SW (H)
AC SW (C)
POWER SW
(P,K) ESTI5372T
(T) ESTI5122R
POWER BOX
POWER22
VJP2638
AC (H)
AC (C)
C7
0.22
C3
3300P
C4
3300P
C5
3300P
C6
3300P
L1
VLF0873
(2mH)
C2
0.22
PAL
C3~C6
2200P
PAL
VLF0930
(10mH)
POWER21
VJP2638
AC FILTER (H)
AC FILTER (C)

⚠ F1 (P,K) XBA1C63NU100
(T) XBA1C63NS1

⚠ FUSE HOLDER VJF0318

⚠ CAPACITOR COVER (C2,C7) VMZ1305

⚠ CAPACITOR COVER (C3,C4,C5,C6) VMZ0730

* = PATTERN ONLY

IMPORTANT SAFETY NOTICE:
COMPONENTS IDENTIFIED WITH THE MARK ⚠ HAVE THE SPECIAL CHARACTERISTICS FOR SAFETY. WHEN REPLACING ANY OF THESE COMPONENTS, USE ONLY THE SAME TYPE.

MODEL / TYPE	AU-665	AU-65	AU-63	AU-62
NTSC	VEP81042A	VEP81042A	VEP81042A	VEP81042A
PAL	VEP81058A	VEP81058A	VEP81058A	VEP81058A

MODEL / TYPE	AU-665	AU-65	AU-63	AU-62
NTSC	VYK3004	VYK3004	VYK3004	VYK3004
PAL	VYK3637	VYK3637	VYK3637	VYK3637

POWER SCHEMATIC DIAGRAM

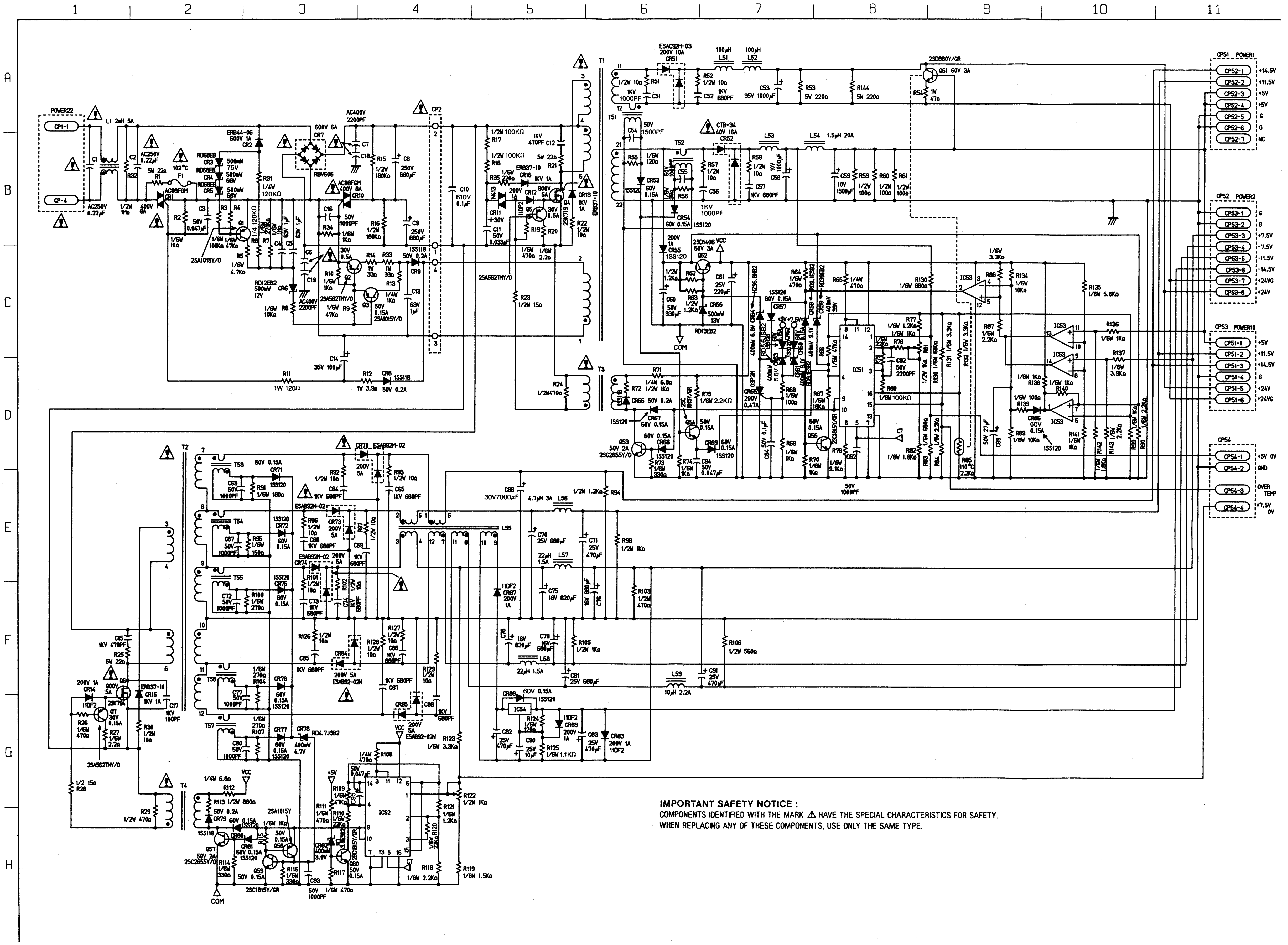
1
2
3
4
5
6
7
8
9
10
11
A
B
C
D
E
F
G
H
POWER22
CP1-1
CP-4
L1 2mH 5A
F1
CR1
CR2
CR7
RBV606
AC400V 2200PF
CP2
T1
T51
T52
T2
T3
T4
T53
T54
T55
T56
T57
L51
L52
L53
L54 1.5μH 20A
L55
L56
L57
L58
L59
Q51 2SD880Y/GR 60V 3A
IC51
IC52
IC53
IC54
COM
VCC
CP51 POWER1
CP52-1 +14.5V
CP52-2 +11.5V
CP52-3 +5V
CP52-4 +5V
CP52-5 G
CP52-6 G
CP52-7 NC
CP52 POWER2
CP53-1 G
CP53-2 G
CP53-3 +7.5V
CP53-4 -7.5V
CP53-5 -11.5V
CP53-6 -14.5V
CP53-7 +24VG
CP53-8 +24V
CP53 POWER10
CP51-1 +5V
CP51-2 +11.5V
CP51-3 +14.5V
CP51-4 G
CP51-5 +24V
CP51-6 +24VG
CP54
CP54-1 +5V 0V
CP54-2 GND
CP54-3 OVER TEMP
CP54-4 +7.5V 0V

IMPORTANT SAFETY NOTICE :
COMPONENTS IDENTIFIED WITH THE MARK ⚠ HAVE THE SPECIAL CHARACTERISTICS FOR SAFETY.
WHEN REPLACING ANY OF THESE COMPONENTS, USE ONLY THE SAME TYPE.

MODEL TYPE	AU-665	AU-65	AU-63	AU-62
NTSC	VEP85015A	VEP85015A	VEP85015C	VEP85015B
PAL	VEP85015D	VEP85015D	VEP85015F	VEP85015E

RA/HA SCHEMATIC DIAGRAM

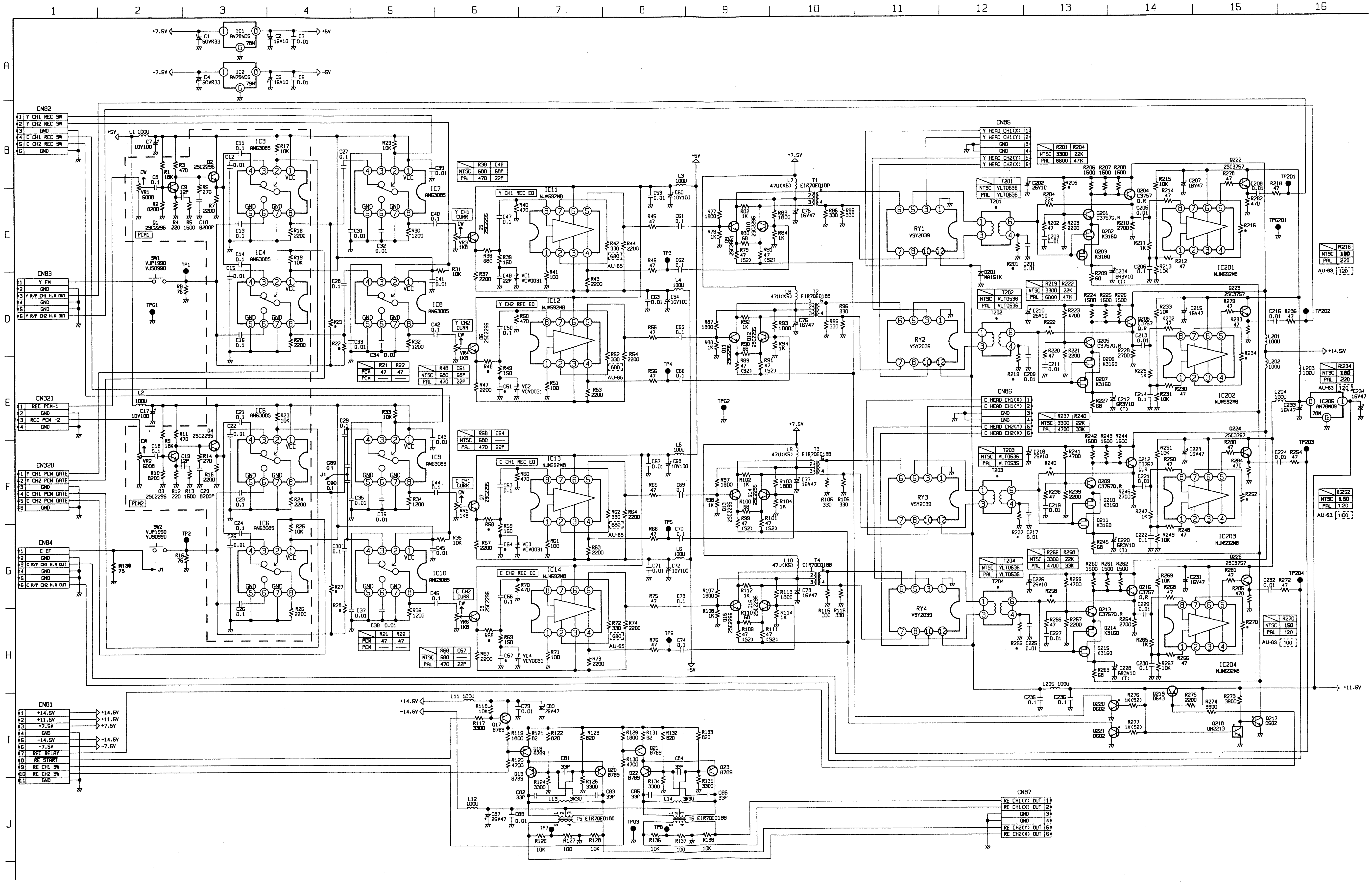
1
2
3
4
5
6
7
8
9
10
11
12
13
14
15
16
A
B
C
D
E
F
G
H
I
J
IC1 AN78N05
IC2 AN79N05
+7.5V
-7.5V
+5V
-5V
CN82
Y CH1 REC SW
Y CH2 REC SW
GND
C CH1 REC SW
C CH2 REC SW
GND
CN83
Y FM
GND
Y R/P CH1 H.A OUT
GND
GND
Y R/P CH2 H.A OUT
CN321
REC PCM-1
GND
REC PCM-2
GND
CN320
Y CH1 PCM GATE
Y CH2 PCM GATE
GND
C CH1 PCM GATE
C CH2 PCM GATE
GND
CN84
C CF
GND
C R/P CH1 H.A OUT
GND
GND
C R/P CH2 H.A OUT
CN81
+14.5V
+11.5V
+7.5V
GND
-14.5V
-7.5V
REC RELAY
RE START
RE CH1 SW
RE CH2 SW
GND
PCM1
PCM2
SW1 VJP1990 VJ50990
SW2 VJP1990 VJ50990
IC3 AN63085
IC4 AN63085
IC5 AN63085
IC6 AN63085
IC7 AN63085
IC8 AN63085
IC9 AN63085
IC10 AN63085
Y CH1 REC EQ
Y CH2 REC EQ
C CH1 REC EQ
C CH2 REC EQ
IC11 NJM592M8
IC12 NJM592M8
IC13 NJM592M8
IC14 NJM592M8
Y CH1 CURR
Y CH2 CURR
C CH1 CURR
C CH2 CURR
AU-65
T1 EIR70E0188
T2 EIR70E0188
T3 EIR70E0188
T4 EIR70E0188
T5 EIR70E0188
T6 EIR70E0188
RY1 VSY2039
RY2 VSY2039
RY3 VSY2039
RY4 VSY2039
CN85
Y HEAD CH1(X)
Y HEAD CH1(Y)
GND
GND
Y HEAD CH2(Y)
Y HEAD CH2(X)
CN86
C HEAD CH1(X)
C HEAD CH1(Y)
GND
GND
C HEAD CH2(Y)
C HEAD CH2(X)
CN87
RE CH1(Y) OUT
RE CH1(X) OUT
GND
GND
RE CH2(Y) OUT
RE CH2(X) OUT
IC201 NJM592M8
IC202 NJM592M8
IC203 NJM592M8
IC204 NJM592M8
IC205 AN78N09
T201 T202 T203 T204
NTSC VLT0536
PAL VLT0535
TP1 TP2 TP3 TP4 TP5 TP6 TP7 TP8
TPG1 TPG2 TPG3
TP201 TP202 TP203 TP204 TPG201
+14.5V
+11.5V
-14.5V
AU-63
NTSC R38 680 C48 68P
PAL R38 470 C48 22P
NTSC R216 180
PAL R216 220
NTSC R234 180
PAL R234 220
NTSC R252 150
PAL R252 120
NTSC R270 150
PAL R270 120
NTSC R201 3300 R204 22K
PAL R201 6800 R204 47K
NTSC R219 3300 R222 22K
PAL R219 6800 R222 47K
NTSC R237 3300 R240 22K
PAL R237 4700 R240 33K
NTSC R255 3300 R258 22K
PAL R255 4700 R258 33K
PCM R21 47 R22 47

REVERSE SIDE **POWER SCHEMATIC DIAGRAM**

MODEL TYPE	AU-665	AU-65	AU-63	AU-62
NTSC	VEP83104A	VEP83097A	VEP83097B	VEP83097B
PAL	VEP83104B	VEP83097A	VEP83097B	VEP83097B

VIDEO I/O SCHEMATIC DIAGRAM[FOR AU-665]

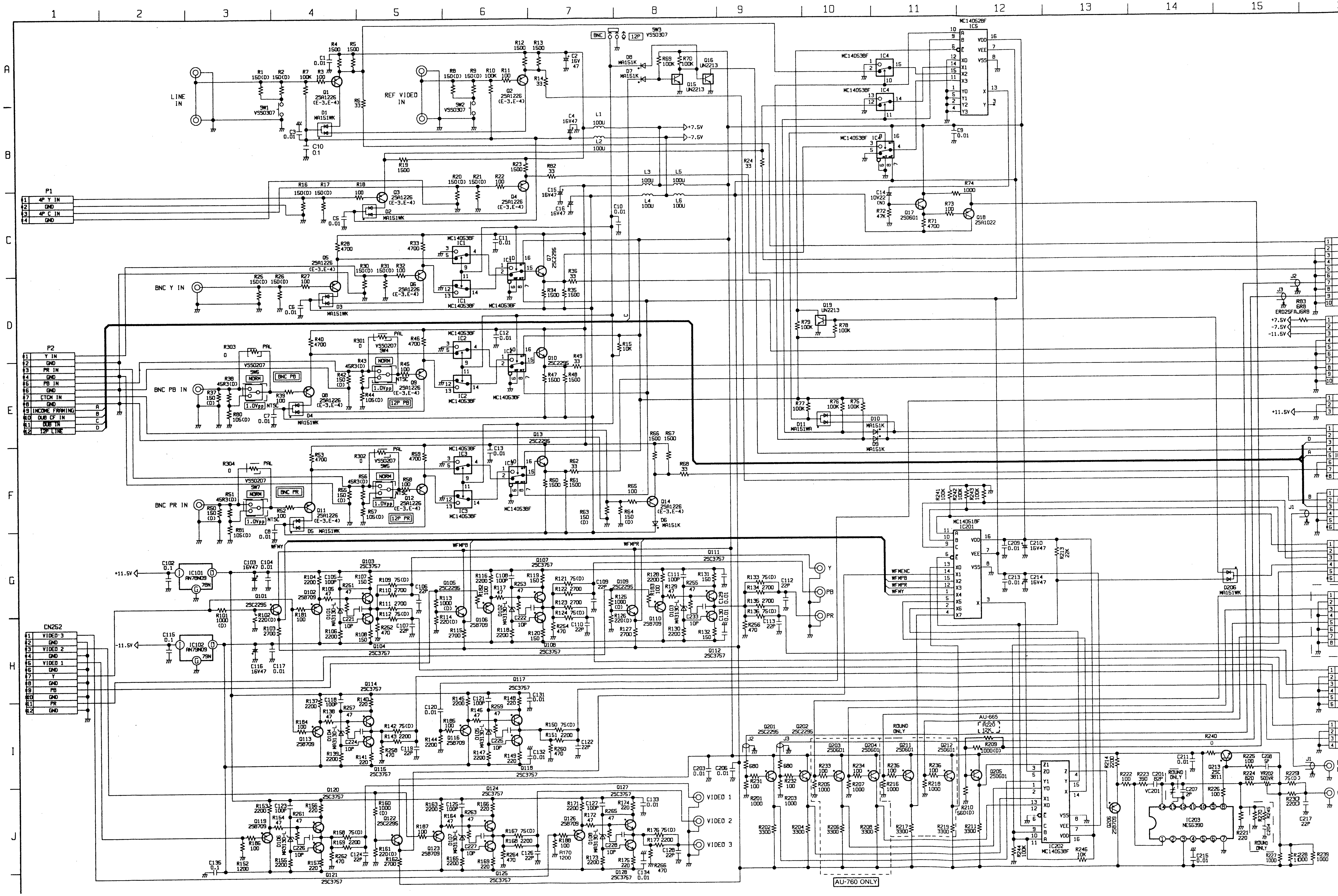
1
2
3
4
5
6
7
8
9
10
11
12
13
14
15
A
B
C
D
E
F
G
H
I
J
LINE IN
REF VIDEO IN
BNC
12P
SW3 VSS0307
P1
4P Y IN
GND
4P C IN
GND
BNC Y IN
P2
Y IN
GND
PR IN
GND
PB IN
GND
CTCM IN
GND
INCOME FRAMING
DUB CF IN
DUB TR
12P LINE
BNC PB IN
BNC PR IN
CN2S2
VIDEO 3
GND
VIDEO 2
GND
VIDEO 1
GND
Y
GND
PB
GND
PR
GND
+7.5V
-7.5V
+11.5V
-11.5V
Y
PB
PR
VIDEO 1
VIDEO 2
VIDEO 3
AU-665
ROUND ONLY
AU-760 ONLY
J1
J2
J3

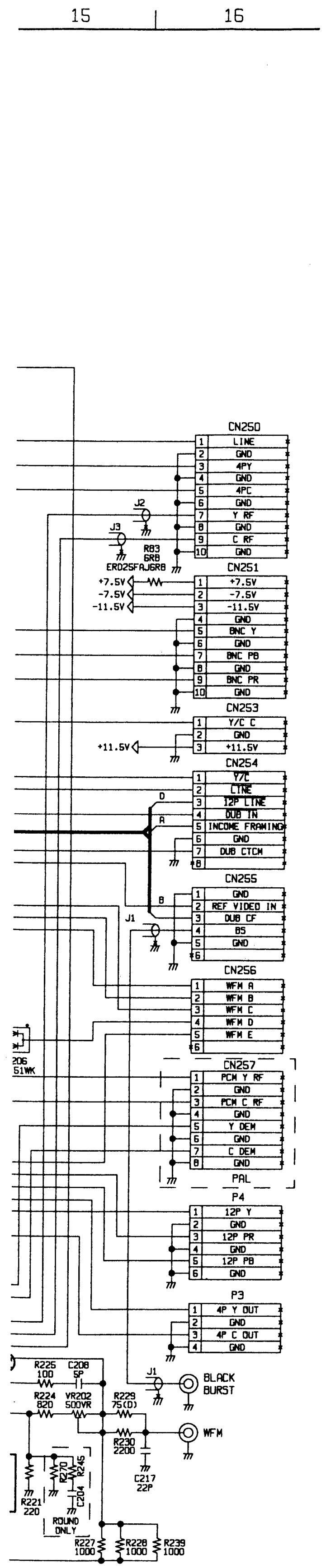
15
16
CN250
LINE
GND
4PY
GND
4PC
GND
Y RF
GND
C RF
GND
J2
J3
R83
6R8
ERD25FAJ6R8
CN251
+7.5V
-7.5V
-11.5V
GND
BNC Y
GND
BNC PB
GND
BNC PR
GND
CN253
Y/C C
GND
+11.5V
CN254
Y/C
LINE
12P LINE
DUB IN
INCOME FRAMING
GND
DUB CTCM
CN255
GND
REF VIDEO IN
DUB CF
BS
GND
J1
CN256
WFM A
WFM B
WFM C
WFM D
WFM E
CN257
PCM Y RF
GND
PCM C RF
GND
Y DEM
GND
C DEM
GND
PAL
P4
12P Y
GND
12P PR
GND
12P PB
GND
P3
4P Y OUT
GND
4P C OUT
GND
R225 100
C208 5P
R224 820
VR202 500VR
R229 75(D)
R230 2200
C217 22P
R221 220
ROUND ONLY
R227 1000
R228 1000
R239 1000
BLACK BURST
WFM
S1WK

VIDEO I/O SCHEMATIC DIAGRAM[FOR AU-65,AU-63,AU-62]

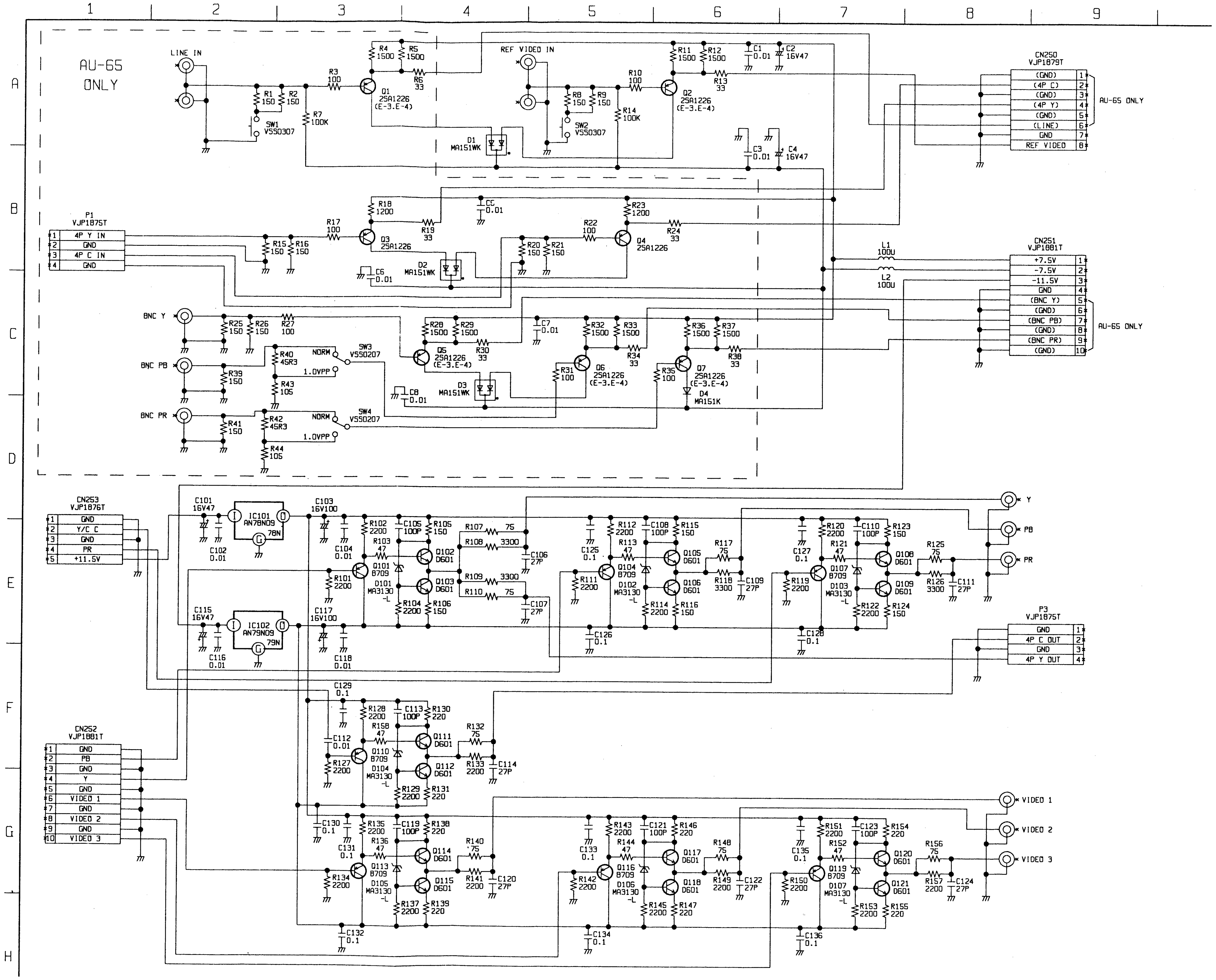
1
2
3
4
5
6
7
8
9
A
B
C
D
E
F
G
H
AU-65 ONLY
LINE IN
REF VIDEO IN
R1 150
R2 150
R3 100
R4 1500
R5 1500
R6 33
R7 100K
Q1 2SA1226 (E-3.E-4)
SW1 VS50307
D1 MA151WK
R8 150
R9 150
R10 100
R11 1500
R12 1500
R13 33
R14 100K
Q2 2SA1226 (E-3.E-4)
SW2 VS50307
C1 0.01
C2 16V47
C3 0.01
C4 16V47
CN250 VJP1879T
(GND)
(4P C)
(GND)
(4P Y)
(GND)
(LINE)
GND
REF VIDEO
AU-65 ONLY
P1 VJP1875T
4P Y IN
GND
4P C IN
GND
R15 150
R16 150
R17 100
R18 1200
R19 33
Q3 2SA1226
D2 MA151WK
C6 0.01
CC 0.01
R20 150
R21 150
R22 100
R23 1200
R24 33
Q4 2SA1226
L1 100U
L2 100U
CN251 VJP1881T
+7.5V
-7.5V
-11.5V
GND
(BNC Y)
(GND)
(BNC PB)
(GND)
(BNC PR)
(GND)
AU-65 ONLY
BNC Y
BNC PB
BNC PR
R25 150
R26 150
R27 100
R39 150
R40 4SR3
R43 105
R41 150
R42 4SR3
R44 105
NORM
1.0VPP
SW3 VS50207
SW4 VS50207
C8 0.01
D3 MA151WK
R28 1500
R29 1500
R30 33
Q5 2SA1226 (E-3.E-4)
C7 0.01
R31 100
R32 1500
R33 1500
R34 33
Q6 2SA1226 (E-3.E-4)
R35 100
R36 1500
R37 1500
R38 33
Q7 2SA1226 (E-3.E-4)
D4 MA151K
CN253 VJP1876T
GND
Y/C C
GND
PR
+11.5V
C101 16V47
IC101 AN78N09
78N
C102 0.01
C103 16V100
C104 0.01
C115 16V47
IC102 AN79N09
79N
C116 0.01
C117 16V100
C118 0.01
R101 2200
R102 2200
R103 47
Q101 B709
D101 MA3130 -L
C105 100P
R104 2200
R105 150
R106 150
Q102 D601
Q103 D601
R107 75
R108 3300
R109 3300
R110 75
C106 27P
C107 27P
C125 0.1
R111 2200
R112 2200
R113 47
Q104 B709
D102 MA3130 -L
C108 100P
R114 2200
R115 150
R116 150
Q105 D601
Q106 D601
R117 75
R118 3300
C109 27P
C126 0.1
C127 0.1
R119 2200
R120 2200
R121 47
Q107 B709
D103 MA3130 -L
C110 100P
R122 2200
R123 150
R124 150
Q108 D601
Q109 D601
R125 75
R126 3300
C111 27P
C128 0.1
Y
PB
PR
P3 VJP1875T
GND
4P C OUT
GND
4P Y OUT
C129 0.1
C112 0.01
R127 2200
R128 2200
R158 47
Q110 B709
D104 MA3130 -L
C113 100P
R129 2200
R130 220
R131 220
Q111 D601
Q112 D601
R132 75
R133 2200
C114 27P
CN252 VJP1881T
GND
PB
GND
Y
GND
VIDEO 1
GND
VIDEO 2
GND
VIDEO 3
C130 0.1
C131 0.1
R134 2200
R135 2200
R136 47
Q113 B709
D105 MA3130 -L
C119 100P
R137 2200
R138 220
R139 220
Q114 D601
Q115 D601
R140 75
R141 2200
C120 27P
C132 0.1
C133 0.1
R142 2200
R143 2200
R144 47
Q116 B709
D106 MA3130 -L
C121 100P
R145 2200
R146 220
R147 220
Q117 D601
Q118 D601
R148 75
R149 2200
C122 27P
C134 0.1
C135 0.1
R150 2200
R151 2200
R152 47
Q119 B709
D107 MA3130 -L
C123 100P
R153 2200
R154 220
R155 220
Q120 D601
Q121 D601
R156 75
R157 2200
C124 27P
C136 0.1
VIDEO 1
VIDEO 2
VIDEO 3

VIDEO VR SCHEMATIC DIAGRAM [FOR AU-665]

MODEL / TYPE	AU-665	AU-65	AU-63	AU-62
NTSC	VEP80621A	Not Used	Not Used	Not Used
PAL	VEP80621A	Not Used	Not Used	Not Used

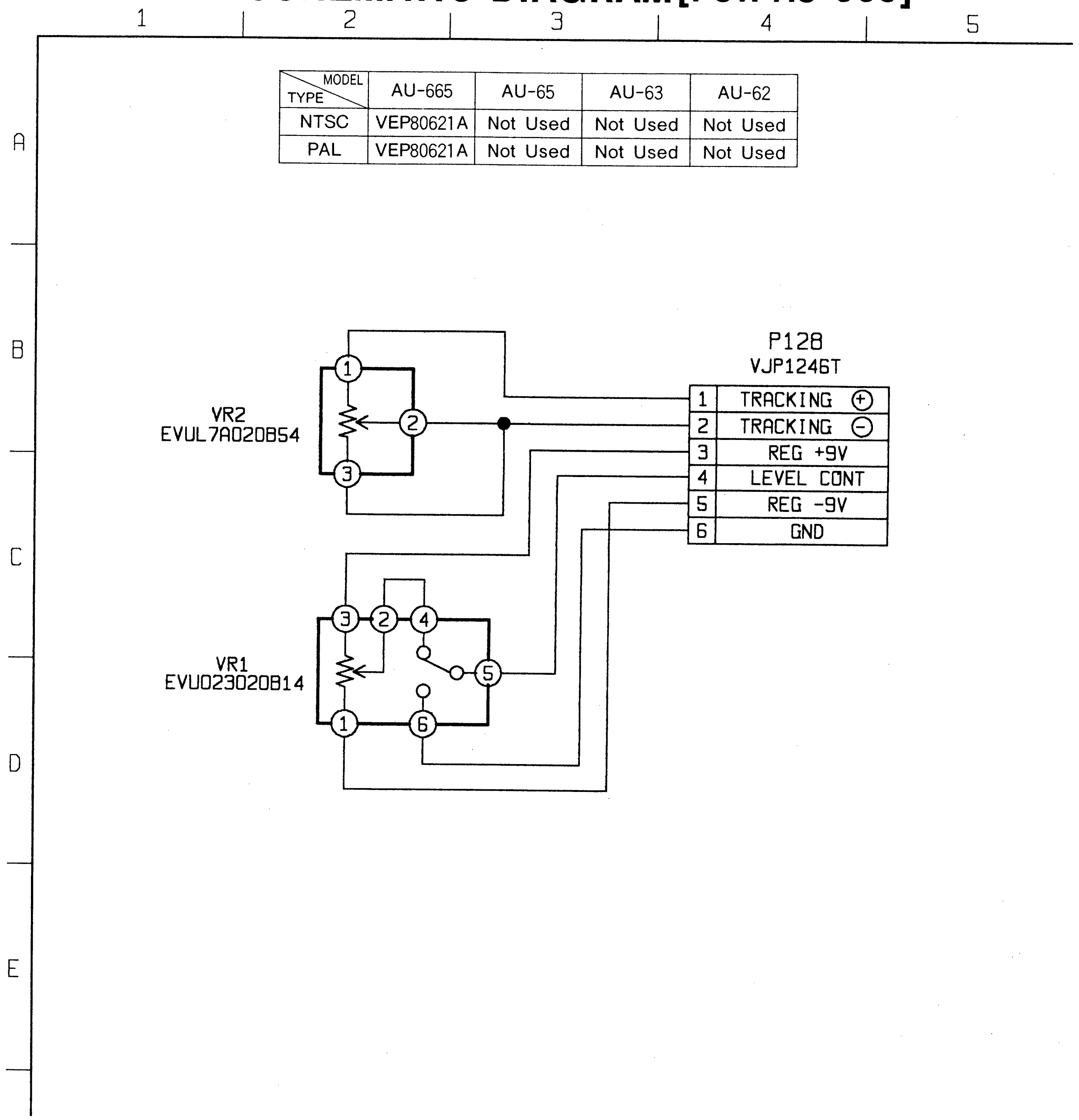
1
2
3
4
5
A
B
C
D
E
P128
VJP1246T
1 TRACKING ⊕
2 TRACKING ⊖
3 REG +9V
4 LEVEL CONT
5 REG -9V
6 GND
VR2
EVUL7A020B54
VR1
EVU023020B14

50P REMOTE SCHEMATIC DIAGRAM [FOR AU-665]

MODEL / TYPE	AU-665
NTSC	VEP80558A
PAL	VEP80558A

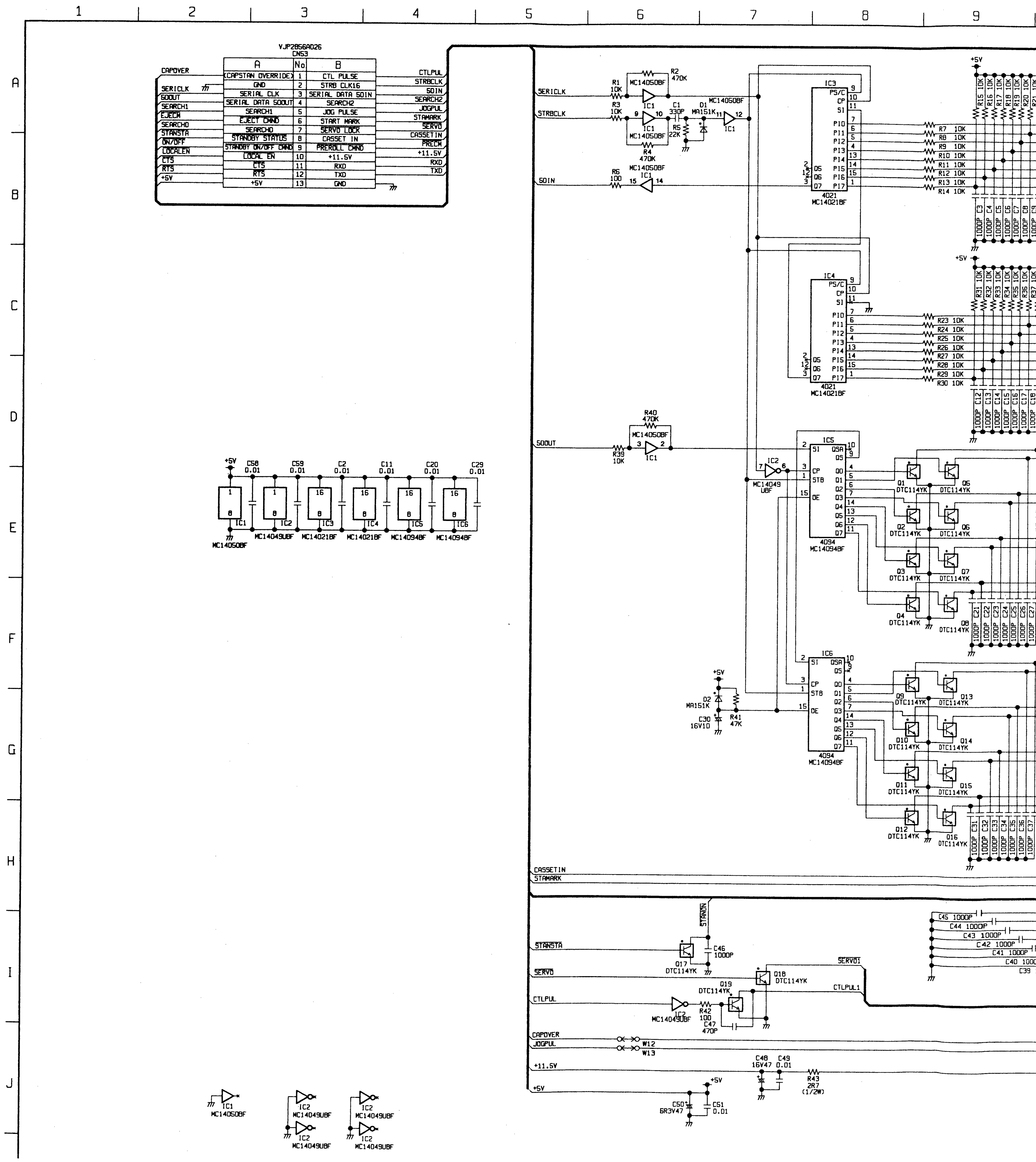
1
2
3
4
5
6
7
8
9
A
B
C
D
E
F
G
H
I
J
VJP2856A026
CN53
A | No | B
(CAPSTAN OVERRIDE) | 1 | CTL PULSE
GND | 2 | STRB CLK16
SERIAL CLK | 3 | SERIAL DATA SOIN
SERIAL DATA SOOUT | 4 | SEARCH2
SEARCH1 | 5 | JOG PULSE
EJECT CMND | 6 | START MARK
SEARCH0 | 7 | SERVO LOCK
STANDBY STATUS | 8 | CASSET IN
STANDBY ON/OFF CMND | 9 | PREROLL CMND
LOCAL EN | 10 | +11.5V
CTS | 11 | RXD
RTS | 12 | TXD
+5V | 13 | GND
CAPOVER
SERICLK
SOOUT
SEARCH1
EJECM
SEARCH0
STANSTA
ON/OFF
LOCALEN
CTS
RTS
+5V
CTLPUL
STRBCLK
SOIN
SEARCH2
JOGPUL
STAMARK
SERVO
CASSETIN
PRECM
+11.5V
RXD
TXD
MC14050BF
MC14049UBF
MC14021BF
MC14094BF
IC1
IC2
IC3
IC4
IC5
IC6
4021
4094
DTC114YK
MA151K
CASSETIN
STAMARK
STANSTA
SERVO
CTLPUL
CAPOVER
JOGPUL
+11.5V
+5V
SERVOI
CTLPUL1

REVERSE SIDE VIDEO I/O SCHEMATIC DIAGRAM

ODEL	AU-665	AU-65	AU-63	AU-62
C	VEP80558A	Refer To AU-MK25 Section		
L	VEP80558A			

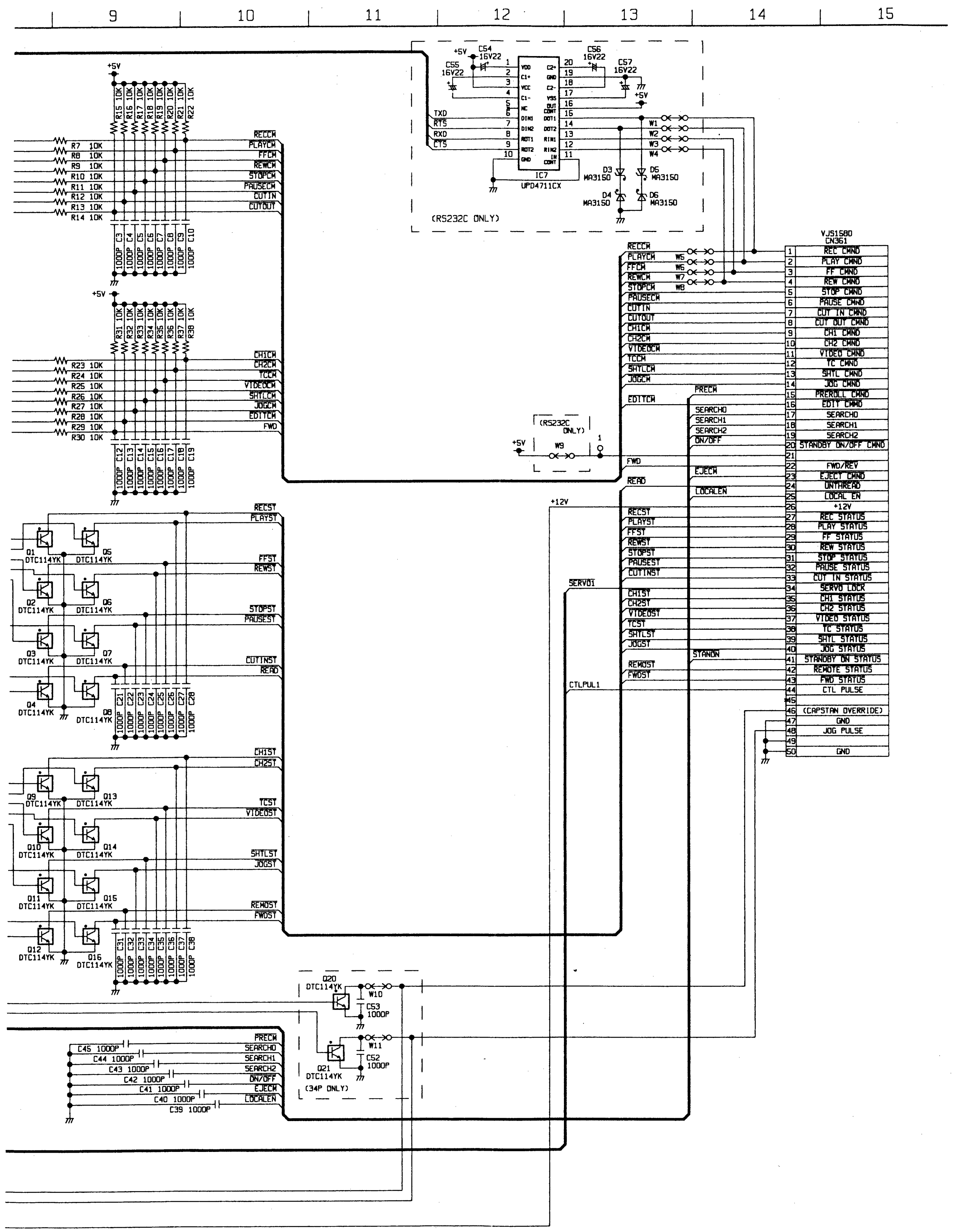

9
10
11
12
13
14
15
+5V
R7 10K
R8 10K
R9 10K
R10 10K
R11 10K
R12 10K
R13 10K
R14 10K
R23 10K
R24 10K
R25 10K
R26 10K
R27 10K
R28 10K
R29 10K
R30 10K
TXD
RTS
RXD
CTS
C54 16V22
C55 16V22
C56 16V22
C57 16V22
IC7
UPD4711CX
D3 MA3150
D4 MA3150
D5 MA3150
D6 MA3150
(RS232C ONLY)
W1
W2
W3
W4
W5
W6
W7
W8
W9
W10
W11
RECCH
PLAYCH
FFCH
REWCH
STOPCH
PAUSECH
CUTIN
CUTOUT
CH1CH
CH2CH
TCCH
VIDEOCH
SHTLCH
JOGCH
EDITCH
FWD
REVD
PRECH
SEARCH0
SEARCH1
SEARCH2
ON/OFF
EJECH
LOCALEN
+12V
SERVO1
CTLPUL1
STANDN
RECST
PLAYST
FFST
REWST
STOPST
PAUSEST
CUTINST
CH1ST
CH2ST
VIDEOST
TCST
SHTLST
JOGST
REMOST
FWDST
Q1 DTC114YK
Q2 DTC114YK
Q3 DTC114YK
Q4 DTC114YK
Q5 DTC114YK
Q6 DTC114YK
Q7 DTC114YK
Q8 DTC114YK
Q9 DTC114YK
Q10 DTC114YK
Q11 DTC114YK
Q12 DTC114YK
Q13 DTC114YK
Q14 DTC114YK
Q15 DTC114YK
Q16 DTC114YK
Q20 DTC114YK
Q21 DTC114YK
C53 1000P
C52 1000P
(34P ONLY)
C45 1000P
C44 1000P
C43 1000P
C42 1000P
C41 1000P
C40 1000P
C39 1000P
VJS1580
CN361
1 REC CMND
2 PLAY CMND
3 FF CMND
4 REW CMND
5 STOP CMND
6 PAUSE CMND
7 CUT IN CMND
8 CUT OUT CMND
9 CH1 CMND
10 CH2 CMND
11 VIDEO CMND
12 TC CMND
13 SHTL CMND
14 JOG CMND
15 PREROLL CMND
16 EDIT CMND
17 SEARCH0
18 SEARCH1
19 SEARCH2
20 STANDBY ON/OFF CMND
21
22 FWD/REV
23 EJECT CMND
24 UNTHREAD
25 LOCAL EN
26 +12V
27 REC STATUS
28 PLAY STATUS
29 FF STATUS
30 REW STATUS
31 STOP STATUS
32 PAUSE STATUS
33 CUT IN STATUS
34 SERVO LOCK
35 CH1 STATUS
36 CH2 STATUS
37 VIDEO STATUS
38 TC STATUS
39 SHTL STATUS
40 JOG STATUS
41 STANDBY ON STATUS
42 REMOTE STATUS
43 FWD STATUS
44 CTL PULSE
45
46 (CAPSTAN OVERRIDE)
47 GND
48 JOG PULSE
49
50 GND

9P REMOTE SCHEMATIC DIAGRAM

MODEL / TYPE	AU-665	AU-65	AU-63	AU-62
NTSC	VEP80551B	VEP80551A	VEP80551A	VEP80551A
PAL	VEP80551B	VEP80551A	VEP80551A	VEP80551A

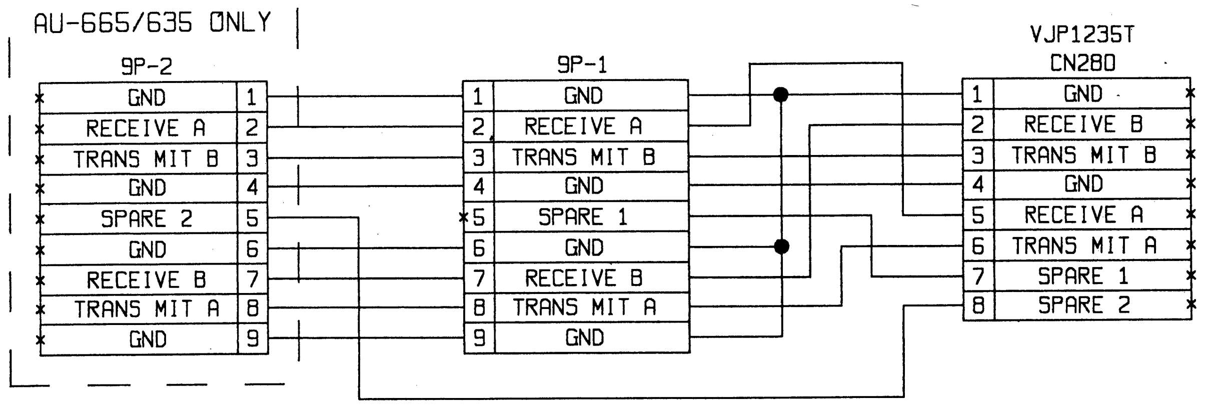

AU-665/635 ONLY
9P-2
1 GND
2 RECEIVE A
3 TRANS MIT B
4 GND
5 SPARE 2
6 GND
7 RECEIVE B
8 TRANS MIT A
9 GND
9P-1
1 GND
2 RECEIVE A
3 TRANS MIT B
4 GND
5 SPARE 1
6 GND
7 RECEIVE B
8 TRANS MIT A
9 GND
VJP1235T
CN280
1 GND
2 RECEIVE B
3 TRANS MIT B
4 GND
5 RECEIVE A
6 TRANS MIT A
7 SPARE 1
8 SPARE 2

Y/C IN/OUT SCHEMATIC DIAGRAM

MODEL / TYPE	AU-665	AU-65	AU-63	AU-62
NTSC	VEP80574A	VEP80574A	VEP80574A	VEP80574A
PAL	VEP80574A	VEP80574A	VEP80574A	VEP80574A

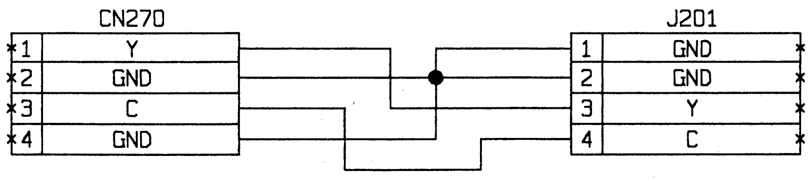

CN270
1 Y
2 GND
3 C
4 GND
J201
1 GND
2 GND
3 Y
4 C

W0(MOTHER 1)P.C.BOARD

MODEL TYPE	AU-665	AU-65	AU-63	AU-62
NTSC	VEP80548B	VEP80548A	VEP80548D	VEP80548C
PAL	VEP80548E	VEP80548A	VEP80548D	VEP80548C

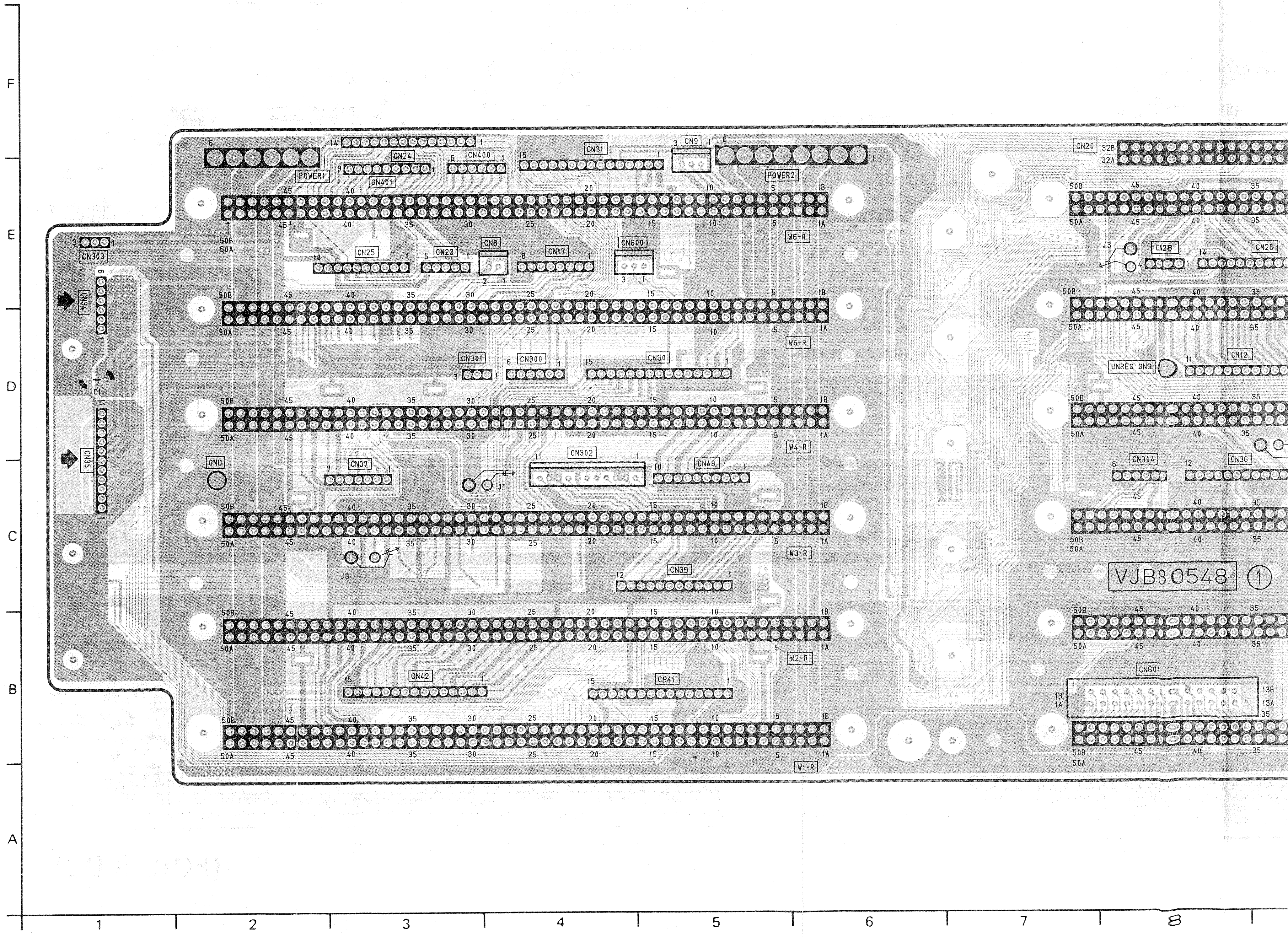

F
E
D
C
B
A
1
2
3
4
5
6
7
8
POWER1
POWER2
CN24
CN400
CN401
CN31
CN9
CN303
CN34
CN25
CN23
CN8
CN17
CN600
W6-R
CN301
CN300
CN30
W5-R
CN35
GND
CN37
J1
CN302
CN48
W4-R
J3
CN39
W3-R
CN42
CN41
W2-R
W1-R
CN20
CN28
CN26
UNREG GND
CN12
CN304
CN36
CN601
VJB80548 ①
50B
50A
1B
1A

P.C. Board Location

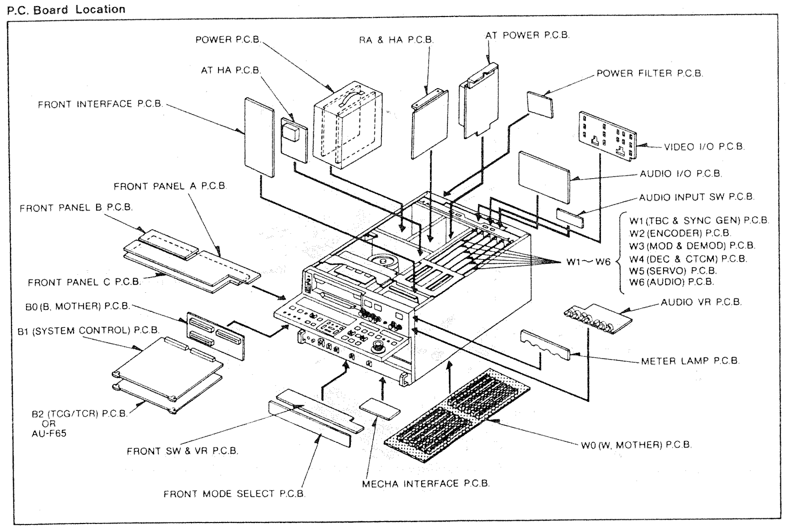

POWER P.C.B.
RA & HA P.C.B.
AT POWER P.C.B.
AT HA P.C.B.
POWER FILTER P.C.B.
FRONT INTERFACE P.C.B.
VIDEO I/O P.C.B.
AUDIO I/O P.C.B.
FRONT PANEL A P.C.B.
AUDIO INPUT SW P.C.B.
FRONT PANEL B P.C.B.
W1 (TBC & SYNC GEN) P.C.B.
W2 (ENCODER) P.C.B.
W3 (MOD & DEMOD) P.C.B.
W4 (DEC & CTCM) P.C.B.
W5 (SERVO) P.C.B.
W6 (AUDIO) P.C.B.
W1～W6
FRONT PANEL C P.C.B.
B0 (B. MOTHER) P.C.B.
AUDIO VR P.C.B.
B1 (SYSTEM CONTROL) P.C.B.
METER LAMP P.C.B.
B2 (TCG/TCR) P.C.B.
OR
AU-F65
FRONT SW & VR P.C.B.
W0 (W. MOTHER) P.C.B.
FRONT MODE SELECT P.C.B.
MECHA INTERFACE P.C.B.

CHIP PART INFORMATION

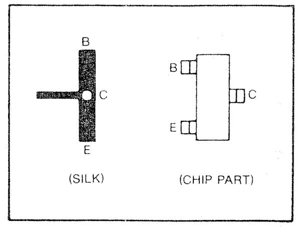
B
C
E
(SILK)
B
C
E
(CHIP PART)

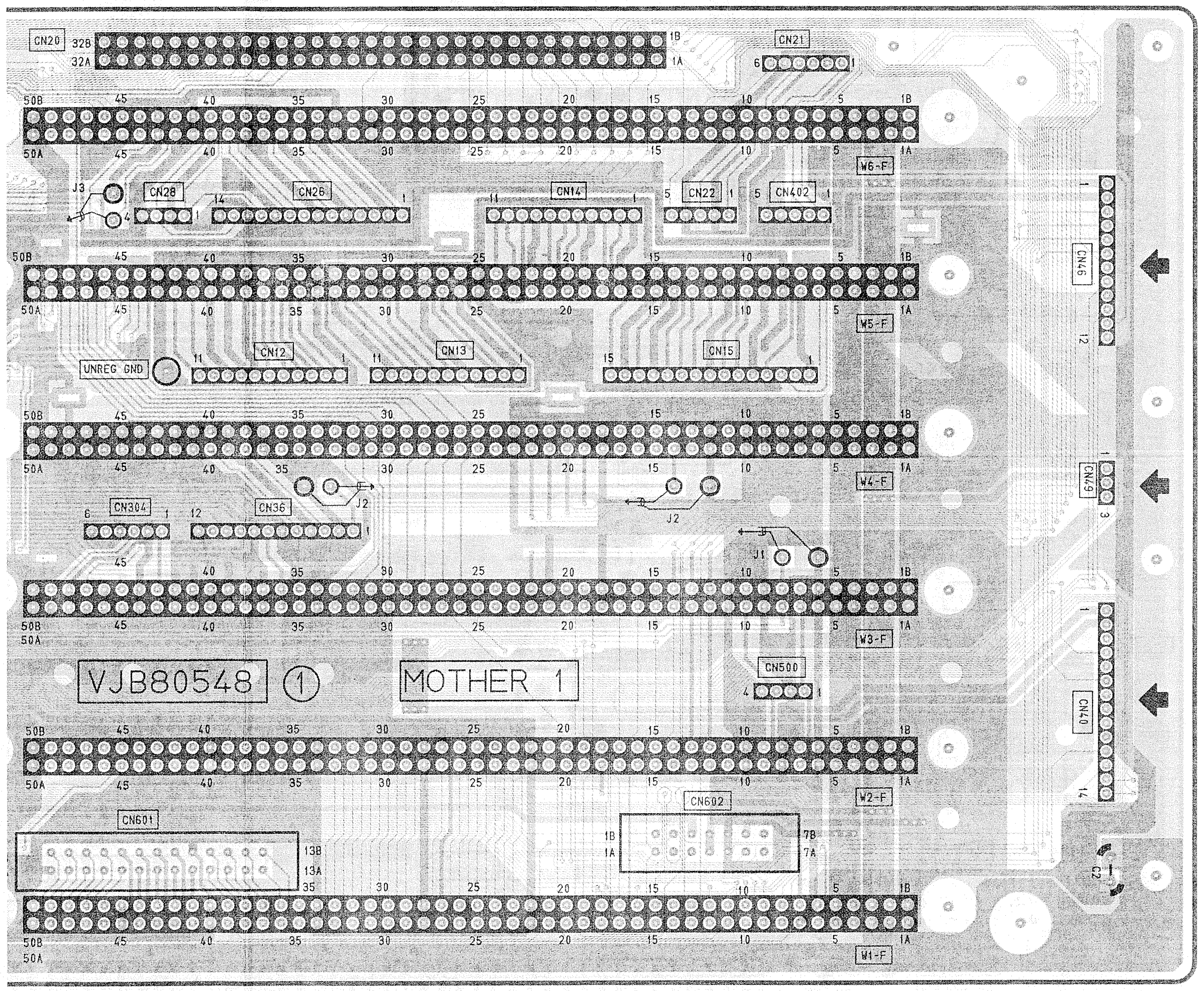
CN20
CN21
CN28
CN26
CN14
CN22
CN402
J3
CN12
CN13
CN15
UNREG GND
CN304
CN36
J1
J2
CN46
CN49
CN40
CN500
CN601
CN602
W6-F
W5-F
W4-F
W3-F
W2-F
W1-F
VJB80548 ①
MOTHER 1
C2

(FOIL SIDE)

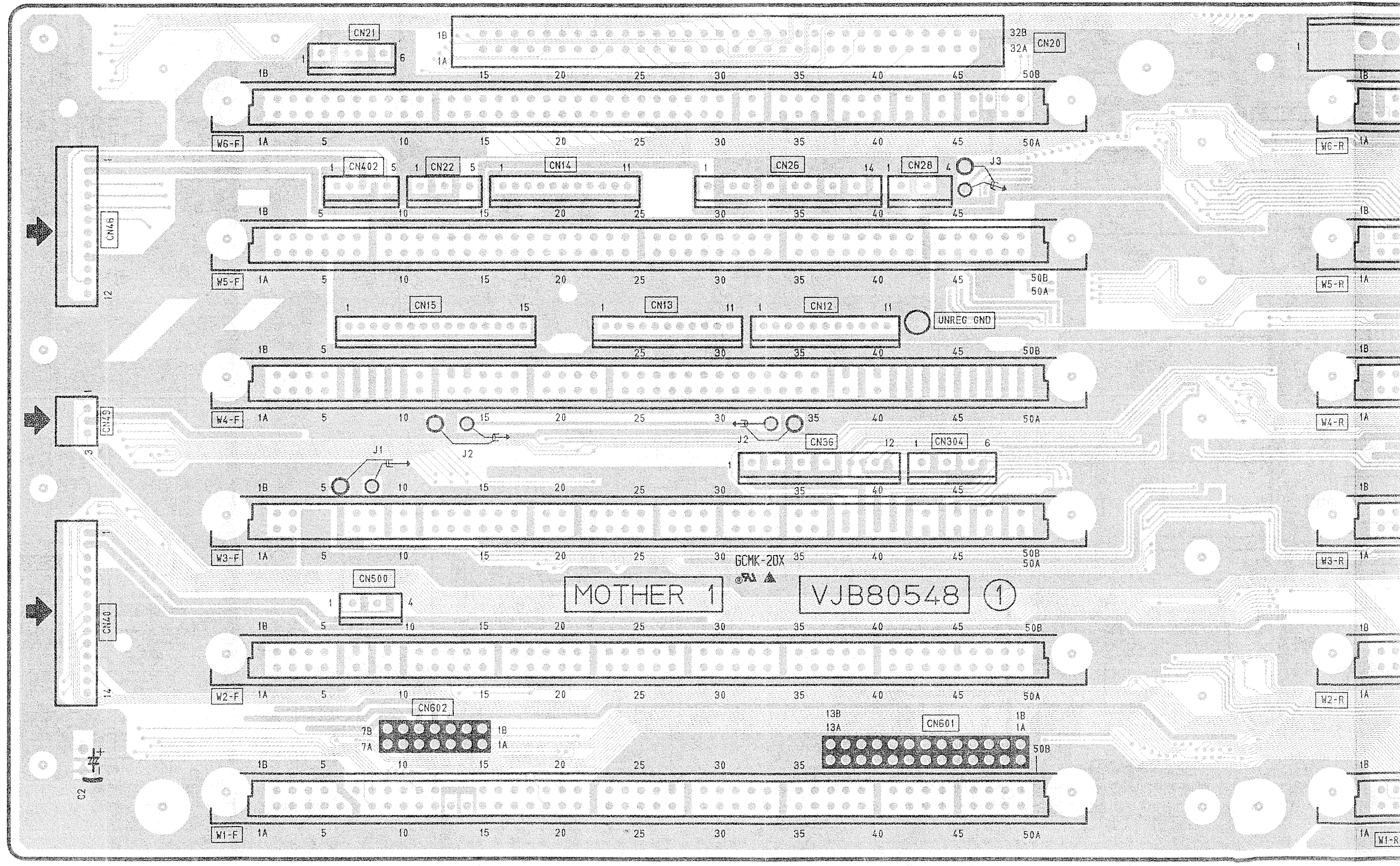
CN21
CN20
CN402
CN22
CN14
CN26
CN28
J3
CN46
CN15
CN13
CN12
UNREG GND
CN49
J1
J2
CN36
CN304
CN40
CN500
GCMK-20X
MOTHER 1
VJB80548 ①
CN602
CN601
C2
W6-F
W5-F
W4-F
W3-F
W2-F
W1-F
W6-R
W5-R
W4-R
W3-R
W2-R
W1-R

8 9 10 11 12 13 14 15 16 17 18 19

W0 MOTHER 1 P.C.BO

CHIP PART INFORMATION

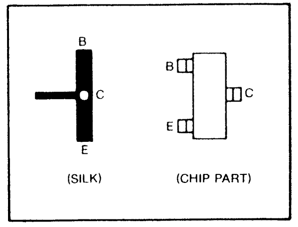
B
C
E
(SILK)
B
C
E
(CHIP PART)

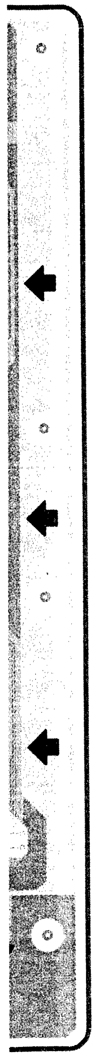

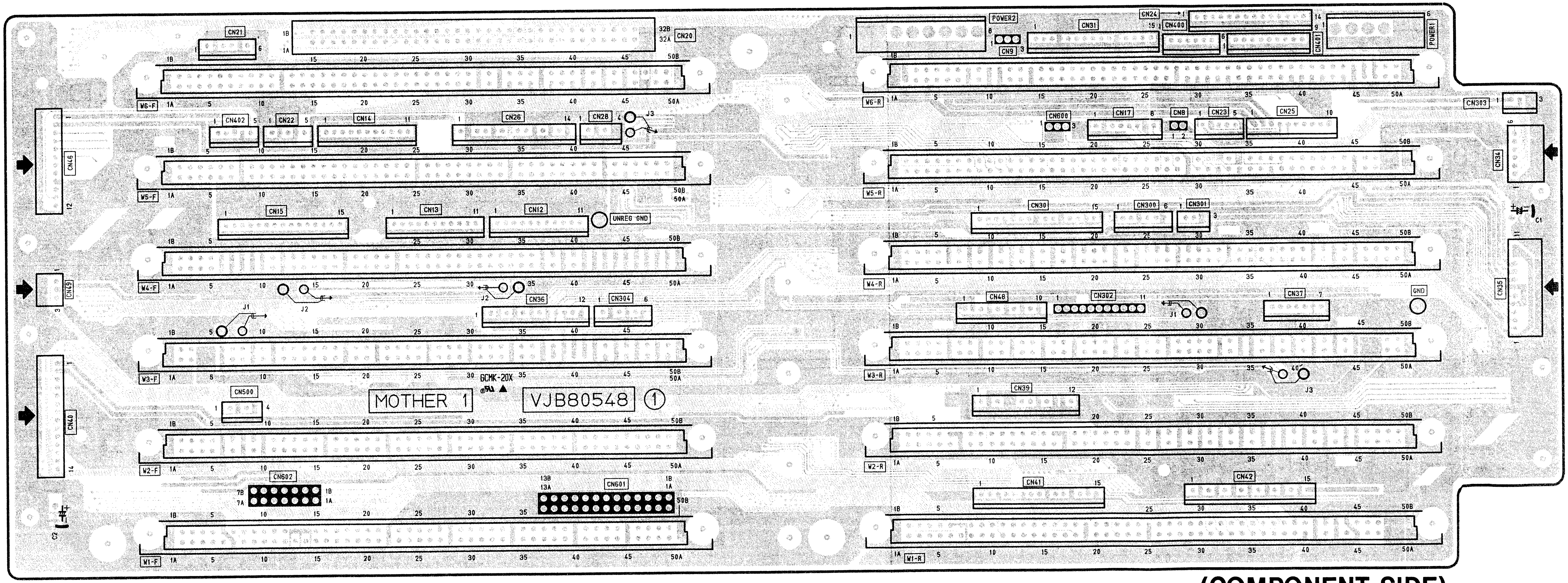
MOTHER 1
VJB80548 ①
GCMK-20X
W6-F
W5-F
W4-F
W3-F
W2-F
W1-F
W6-R
W5-R
W4-R
W3-R
W2-R
W1-R
CN20
CN21
CN402
CN22
CN14
CN26
CN28
CN15
CN13
CN12
UNREG GND
CN36
CN304
CN500
CN602
CN601
CN46
CN49
CN40
POWER2
CN9
CN31
CN24
CN400
CN401
POWER1
CN600
CN17
CN8
CN23
CN25
CN303
CN34
CN30
CN300
CN301
CN48
CN302
CN37
GND
CN35
CN39
CN41
CN42
J1
J2
J3
C1
C2
1A
1B
50A
50B

(COMPONENT SIDE)

DE)

13 14 15 16 17 18 19 20 21 22 23 24

REVERSE SIDE

W1 TBC & SYNC GEN P.C.BOAR

W1(TBC & SYNC GEN)P.C.BOARD

MODEL TYPE	AU-665	AU-65	AU-63	AU-62
NTSC	See 5-3-5	VEP88062A	VEP88062A	VEP88062A
PAL	———	VEP88062C	VEP88062C	VEP88062C

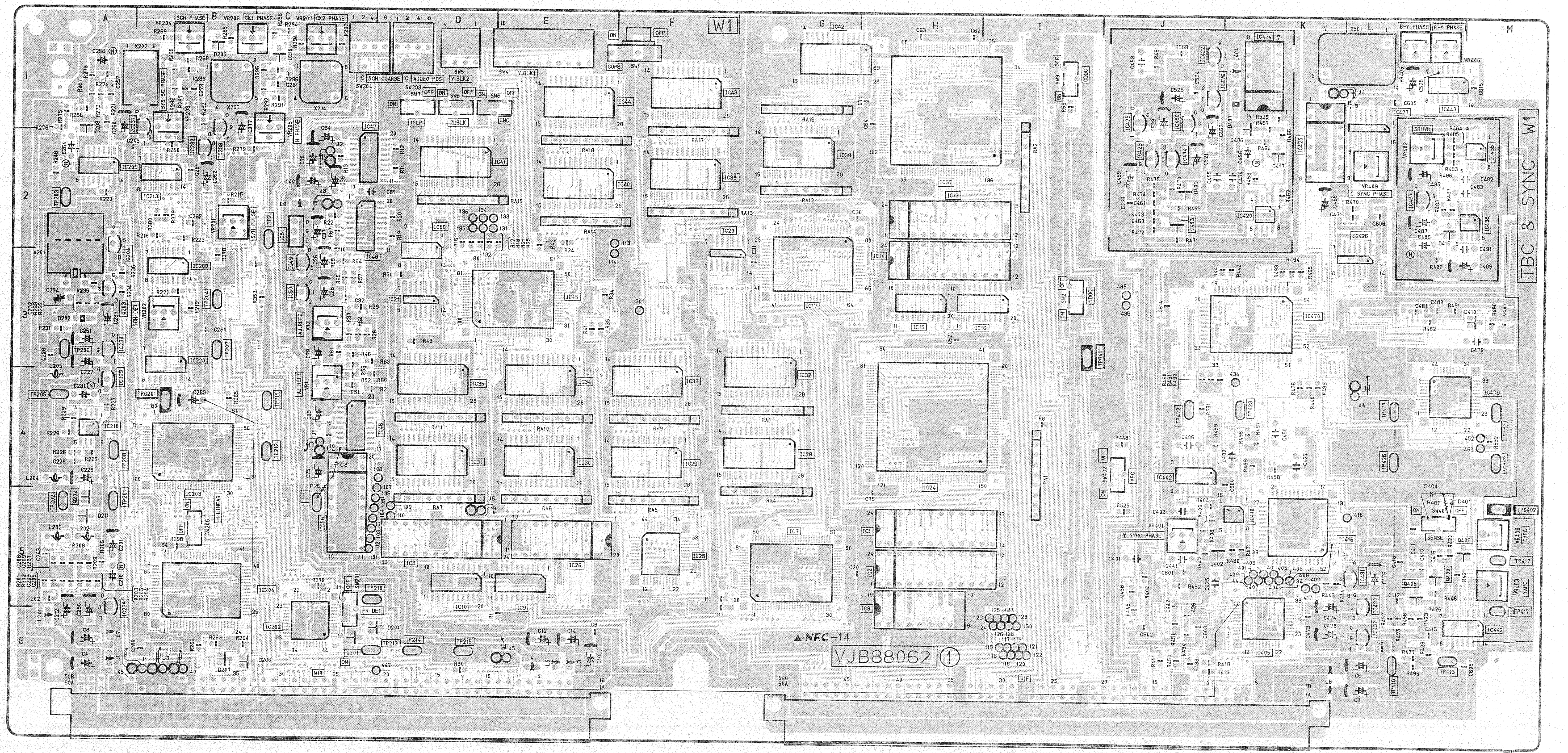
W1
TBC & SYNC W1
VJB88062 ①
▲NEC-14
A
B
C
D
E
F
G
H
I
J
K
L
M
1
2
3
4
5
6
5CH PHASE
CK1 PHASE
CK2 PHASE
5CH COARSE
VIDEO POS
Y.BLK2
V.BLK1
15LP
7LBLK
CNC
COMB
SW1
H PHASE
S/H PULSE
H LINEAR
FR DET
WIR
WIF
B-Y PHASE
R-Y PHASE
C SYNC PHASE
Y SYNC PHASE
SRHVR
SENSE
VDOC
CDOC
AFC
X501
X201
X202
X203
X204

(COMPONENT SIDE)

CHIP PART INFORMATION

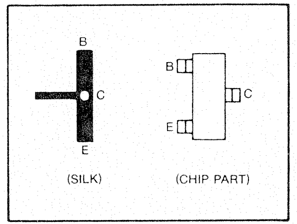
B
C
E
(SILK)
B
C
E
(CHIP PART)

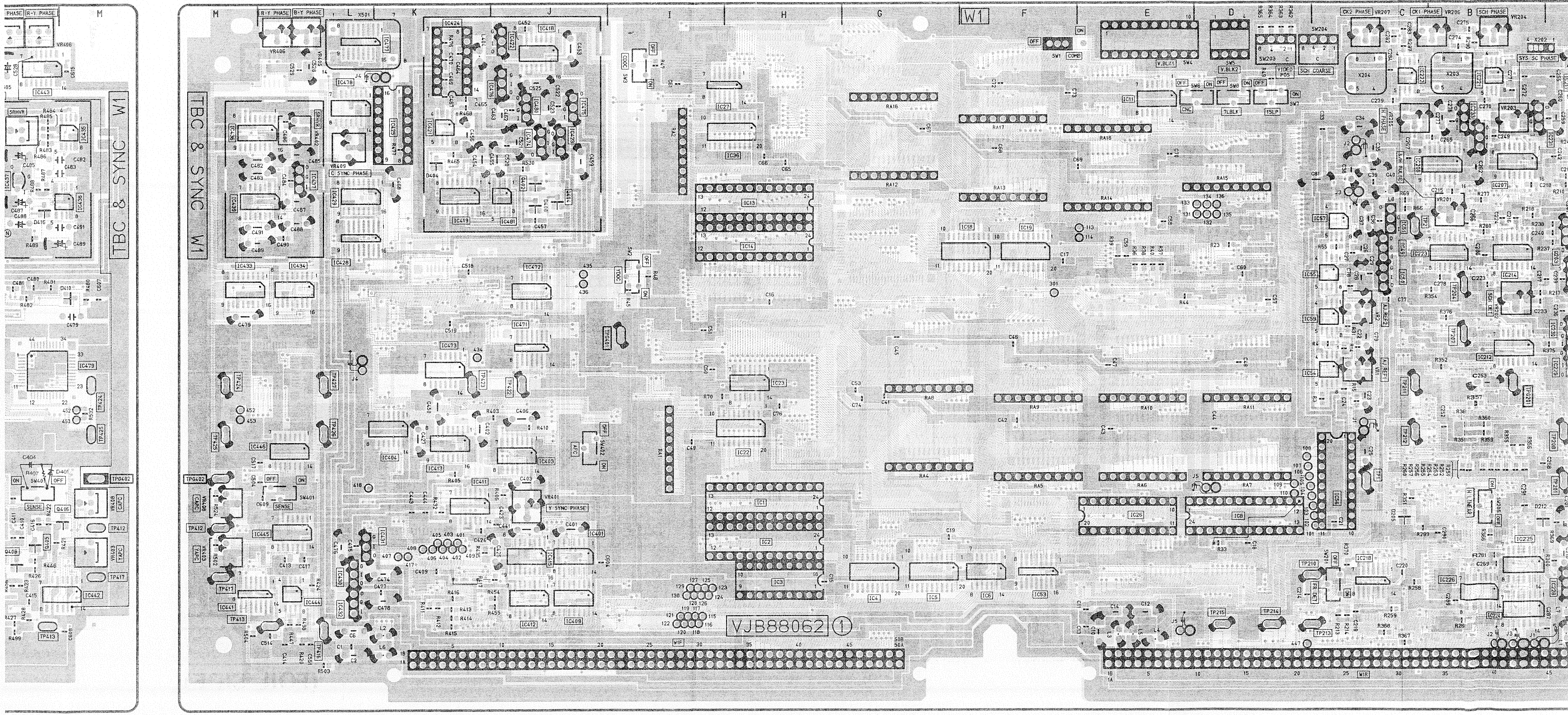
TBC & SYNC W1
TBC & SYNC W1
W1
VJB88062 ①
M
L
K
J
I
H
G
F
E
D
C
B
R-Y PHASE
B-Y PHASE
C SYNC PHASE
Y SYNC PHASE
CK2 PHASE
CK1 PHASE
SCH PHASE
SYS SC PHASE
SCH COARSE
VIDEO POS
V.BLK1
V.BLK2
SENSE
COMB
ON
OFF

IENT SIDE)

(FOI

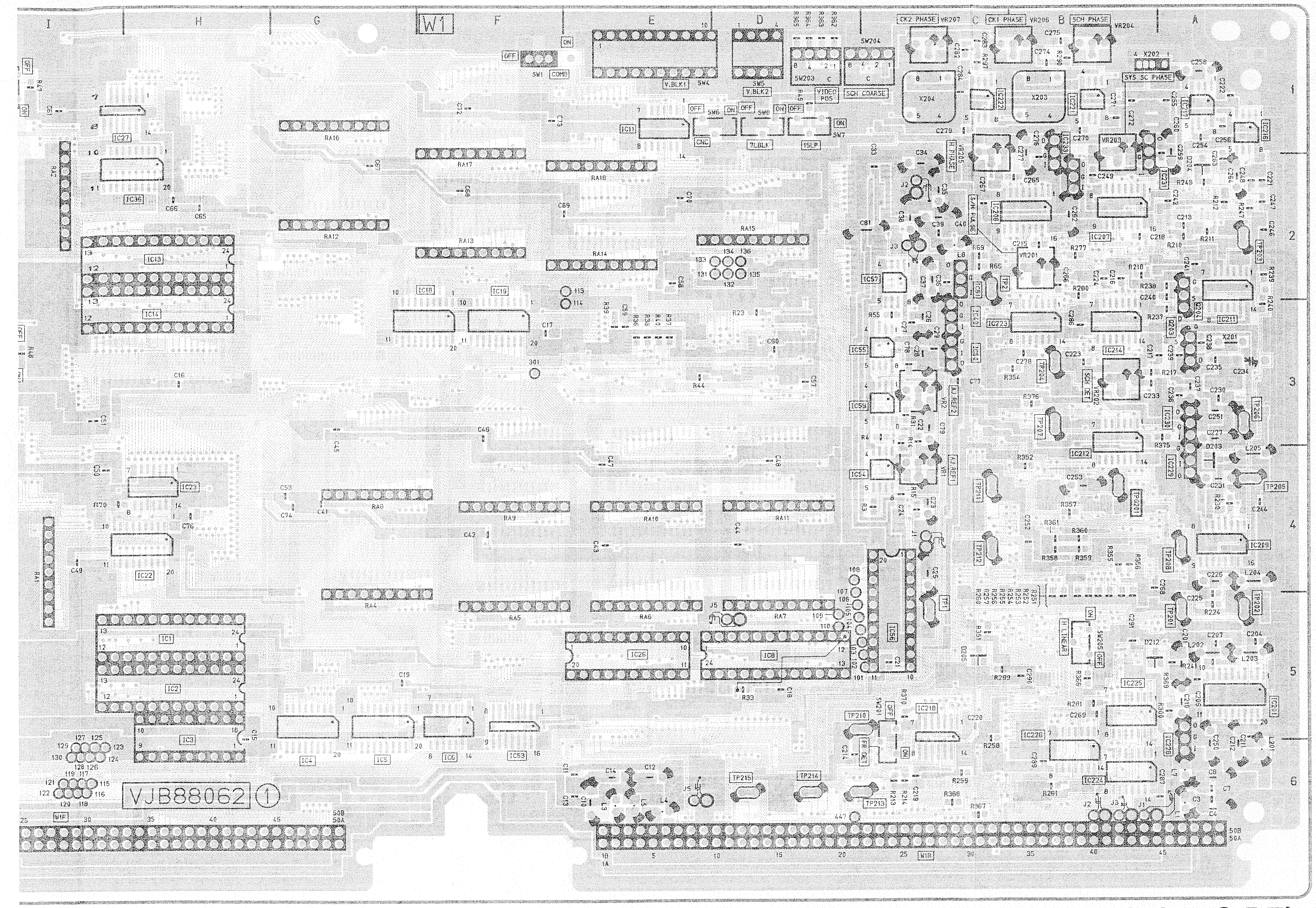
W1
VJB88062 ①
A
B
C
D
E
F
G
H
I
1
2
3
4
5
6
CK2 PHASE
VR207
CK1 PHASE
VR206
SCH PHASE
VR204
SYS SC PHASE
SCH COARSE
VIDEO POS
V.BLK1
V.BLK2
TLBLK
15LP
H PHASE
SAM PULSE
AJ.REF1
AJ.REF2
SCH DET
H LINEAR
X202
X203
X204
SW1
SW4
SW5
SW203
SW204
50B
50A
M1F
W1R

(FOIL SIDE)

P.C. Board Location

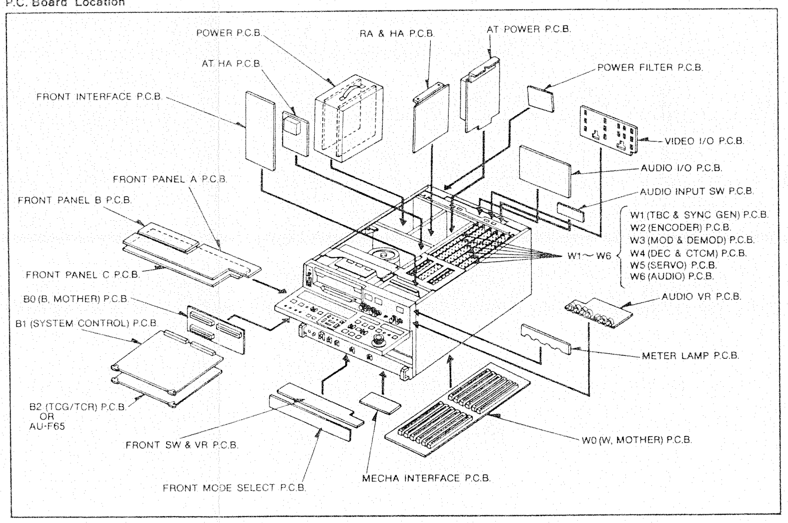
POWER P.C.B.
RA & HA P.C.B.
AT POWER P.C.B.
AT HA P.C.B.
POWER FILTER P.C.B.
FRONT INTERFACE P.C.B.
VIDEO I/O P.C.B.
AUDIO I/O P.C.B.
FRONT PANEL A P.C.B.
AUDIO INPUT SW P.C.B.
FRONT PANEL B P.C.B.
W1 (TBC & SYNC GEN) P.C.B.
W2 (ENCODER) P.C.B.
W3 (MOD & DEMOD) P.C.B.
W4 (DEC & CTCM) P.C.B.
W5 (SERVO) P.C.B.
W6 (AUDIO) P.C.B.
W1～W6
FRONT PANEL C P.C.B.
AUDIO VR P.C.B.
B0 (B, MOTHER) P.C.B.
B1 (SYSTEM CONTROL) P.C.B.
METER LAMP P.C.B.
B2 (TCG/TCR) P.C.B.
OR
AU-F65
FRONT SW & VR P.C.B.
W0 (W, MOTHER) P.C.B.
MECHA INTERFACE P.C.B.
FRONT MODE SELECT P.C.B.

W1 (TBC & SYNCGEN)

COMPONENT SIDE

Transistors	
Q201	C-6
Q202	A-5
Q203	A-3
Q204	A-2
Q403	J-2
Q405	L-5
Q406	M-5
Q408	L-5

Integrated Circuits	
IC1	H-5
IC2	H-5
IC3	H-5
IC7	G-5
IC8	D-5
IC9	E-5
IC10	D-5
IC13	H-2
IC14	H-3
IC15	H-3
IC16	I-3
IC17	G-3
IC20	F-3
IC21	D-3
IC24	H-4
IC25	F-5
IC26	E-5
IC28	G-4
IC29	F-4
IC30	E-4
IC31	D-4
IC32	G-4
IC33	F-4
IC34	E-4
IC35	D-4
IC37	H-1
IC38	G-2
IC39	F-2
IC40	E-2
IC41	D-2
IC42	G-1
IC43	F-1
IC44	E-1
IC45	E-3
IC46	C-4
IC47	C-2
IC48	C-2
IC49	C-3
IC50	C-3
IC51	C-2
IC56	C-5
IC58	D-3
IC202	C-6
IC203	B-4
IC204	B-5
IC205	A-2
IC208	B-3
IC210	A-4
IC213	B-2
IC220	B-3
IC228	A-6
IC229	A-4
IC230	A-3
IC231	B-1
IC232	B-2
IC233	B-1
IC402	J-4
IC405	K-6
IC410	K-5
IC416	K-5
IC420	K-2
IC422	J-1
IC423	J-2
IC424	K-1
IC425	K-2
IC426	L-3
IC427	L-1
IC430	L-5
IC431	L-5
IC432	L-6
IC435	M-2
IC437	L-2
IC438	M-2
IC442	M-6
IC443	L-1
IC470	K-3
IC474	J-2
IC475	J-1
IC476	J-1
IC479	L-4
IC480	J-1

Test Point	
TP1	C-5
TP2	C-2
TP201	A-5
TP202	A-5
TP203	A-2
TP204	B-3
TP205	A-4
TP206	A-3
TP207	B-3
TP208	A-4
TP210	C-5
TP211	C-4
TP212	C-4
TP213	C-6
TP214	D-6
TP215	D-6
TP412	M-5
TP413	L-6
TP413	L-6
TP416	L-6
TP417	M-5
TP422	J-4
TP423	K-4
TP424	M-4
TP425	M-4
TP426	L-4
TP427	L-4

TP GND	
TPG201	B-4
TPG401	I-3
TPG402	M-5

Adjustments	
VR1	C-4
VR2	C-3
VR201	B-2
VR202	B-3
VR203	B-1
VR204	B-1
VR205	C-2
VR206	B-1
VR207	C-1
VR401	J-5
VR402	L-2
VR403	M-5
VR405	L-1
VR406	L-1
VR408	M-5
VR409	L-2

FOIL SIDE

Transistor	
Q402	J-2
Q404	J-2

Integrated Circuits	
IC4	G-5
IC5	G-5
IC6	F-5
IC11	E-1
IC18	F-3
IC19	F-3
IC22	H-4
IC23	H-4
IC27	H-1
IC36	H-2
IC53	F-5
IC54	C-4
IC55	C-3
IC57	C-2
IC59	C-3
IC201	A-5
IC206	B-2
IC207	B-2
IC209	A-4
IC211	A-3
IC212	B-3
IC214	B-3
IC216	A-1
IC217	A-1
IC218	C-5
IC221	B-1
IC222	C-1
IC223	B-3
IC224	B-6
IC225	B-5
IC226	B-6
IC401	J-5
IC403	J-4
IC404	K-4
IC409	J-6
IC411	K-5
IC412	J-6
IC413	K-4
IC415	J-5
IC418	J-1
IC419	K-2
IC421	K-2
IC428	L-3
IC429	L-2
IC433	M-3
IC434	L-3
IC436	L-2
IC439	L-2
IC441	M-6
IC444	L-6
IC445	L-5
IC446	L-4
IC471	J-3
IC472	J-3
IC473	K-4
IC477	L-1
IC478	L-1
IC481	J-2

W1 (TBC & SYNC GEN) FOR AU-665/PE-P

COMPONENT SIDE

Transistors

Q201	C-6
Q202	A-5
Q203	A-3
Q204	A-2
Q400	L-5
Q403	J-2
Q405	L-5
Q406	L-5

Integrated Circuits

IC4	D-5
IC5	D-5
IC6	E-5
IC7	E-4
IC9	E-5
IC11	D-2
IC12	E-5
IC17	E-3
IC20	G-3
IC21	F-3
IC24	H-5
IC25	H-2
IC26	H-1
IC27	H-1
IC28	G-4
IC29	G-5
IC30	H-4
IC31	G-1
IC32	H-2
IC33	F-4
IC34	F-2
IC35	F-5
IC37	F-1
IC45	E-2
IC46	D-4
IC47	D-2
IC48	D-2
IC49	C-3
IC50	C-3
IC51	C-2
IC53	E-5
IC56	C-5
IC58	D-2
IC81	F-3
IC83	G-3
IC202	C-6
IC203	B-4
IC204	B-5
IC205	A-2
IC208	B-3
IC210	A-4
IC213	B-2
IC220	B-3
IC228	A-6
IC229	A-4
IC230	A-3
IC231	B-1
IC232	B-2
IC233	B-1
IC402	J-4
IC405	K-6
IC410	K-5
IC416	K-5
IC420	K-2
IC422	J-1
IC423	J-2
IC424	K-1
IC425	K-2
IC426	L-3
IC427	L-1
IC430	L-5
IC431	L-5
IC432	L-6
IC435	M-2
IC437	L-2
IC438	M-2
IC442	M-6
IC443	L-1
IC470	K-3
IC474	J-2
IC475	J-1
IC476	J-1
IC479	L-4
IC480	J-1
IC500	K-4

Test Point

TP1	C-5
TP2	C-2
TP201	A-5
TP202	A-5
TP203	A-2
TP204	B-3
TP205	A-4
TP206	A-3
TP207	B-3
TP208	A-4
TP210	C-5
TP211	C-4
TP212	C-4
TP213	C-6
TP214	D-6
TP215	D-6
TP412	M-5
TP413	L-6
TP416	L-6
TP417	M-5
TP422	J-4
TP423	K-4
TP424	M-4
TP425	M-4
TP426	L-4
TP427	L-4

TP GND

TPG201	B-4
TPG401	J-3
TPG402	M-5

Adjustments

VR1	C-4
VR2	C-3
VR201	B-2
VR202	B-3
VR203	B-2
VR204	B-1
VR205	C-2
VR206	B-1
VR207	C-1
VR401	J-5
VR402	L-2
VR403	M-5
VR405	L-1
VR406	L-1
VR409	L-2

S W

SW1	F-1
SW2	I-3
SW3	I-1
SW4	E-1
SW5	D-1
SW6	D-1
SW7	D-1
SW8	D-1
SW201	C-5
SW203	D-1
SW204	C-1
SW205	B-5
SW401	L-5
SW402	J-4

FOIL SIDE

Transistor

Q203	A-3
Q204	A-2
Q402	J-2
Q404	J-2

Integrated Circuits

IC18	D-3
IC19	E-4
IC22	H-5
IC23	H-5
IC35	F-5
IC36	H-3
IC37	F-1
IC49	C-3
IC50	C-3
IC51	C-2
IC54	D-4
IC55	D-3
IC56	C-5
IC57	C-2
IC59	D-3
IC70	D-4
IC71	E-4
IC72	F-4
IC77	H-2
IC80	G-1
IC82	G-3
IC201	A-5
IC206	B-2
IC207	B-2
IC209	A-4
IC211	A-2
IC212	B-3
IC214	B-3
IC216	A-1
IC217	A-1
IC218	C-5
IC221	B-1
IC222	C-1
IC223	B-3
IC224	B-6
IC225	B-5
IC226	B-6
IC228	A-6
IC229	A-4
IC230	A-3
IC231	B-2
IC232	B-2
IC233	B-1
IC401	J-5
IC403	J-4
IC404	K-4
IC409	J-6
IC411	K-5
IC412	J-6
IC413	K-4
IC415	J-5
IC418	J-1
IC419	K-2
IC421	K-2
IC422	J-1
IC423	J-2
IC424	K-1
IC425	K-2
IC428	L-2
IC429	L-2
IC430	L-5
IC431	L-5
IC432	L-6
IC433	M-3
IC434	L-3
IC436	L-2
IC437	L-2
IC439	M-2
IC441	L-6
IC444	L-6
IC445	L-5
IC446	L-4
IC471	J-3
IC472	J-3
IC473	K-4
IC474	J-2
IC475	J-1
IC476	J-1
IC477	L-2
IC478	L-1
IC480	J-1
IC481	J-2
IC497	M-4
IC498	M-3
IC499	K-4

Test Point

TP1	C-5
TP2	C-2
TP201	A-5
TP202	A-5
TP203	A-2
TP204	B-3
TP205	A-4
TP206	A-3
TP207	B-3
TP208	A-4
TP210	D-5
TP211	C-4
TP212	C-4
TP213	D-6
TP214	D-6
TP215	D-6
TP412	M-5
TP413	L-6
TP416	L-6
TP417	M-5
TP422	J-4
TP423	K-4
TP424	M-4
TP425	M-4
TP426	L-4
TP427	L-4

TP GND

TPG201	B-4
TPG401	J-3
TPG402	M-5

Adjustments

VR1	C-4
VR2	C-3
VR201	B-2
VR202	B-3
VR203	B-2
VR204	B-1
VR205	C-2
VR206	B-1
VR207	C-1
VR401	J-5
VR402	L-2
VR403	M-5
VR405	L-1
VR406	L-1
VR408	M-5
VR409	L-2

S W

SW1	F-1
SW2	I-3
SW3	I-1
SW4	E-1
SW5	D-1
SW6	D-1
SW7	D-1
SW8	D-1
SW201	C-5
SW203	D-1
SW204	C-1
SW205	B-5
SW401	L-5
SW402	J-4

W1 (TBC & SYNC GEN) P.C.BOARD

MODEL / TYPE	AU-665	AU-65	AU-63	AU-62
NTSC	VEP88077A	See Page 5-3-2		
PAL	——			

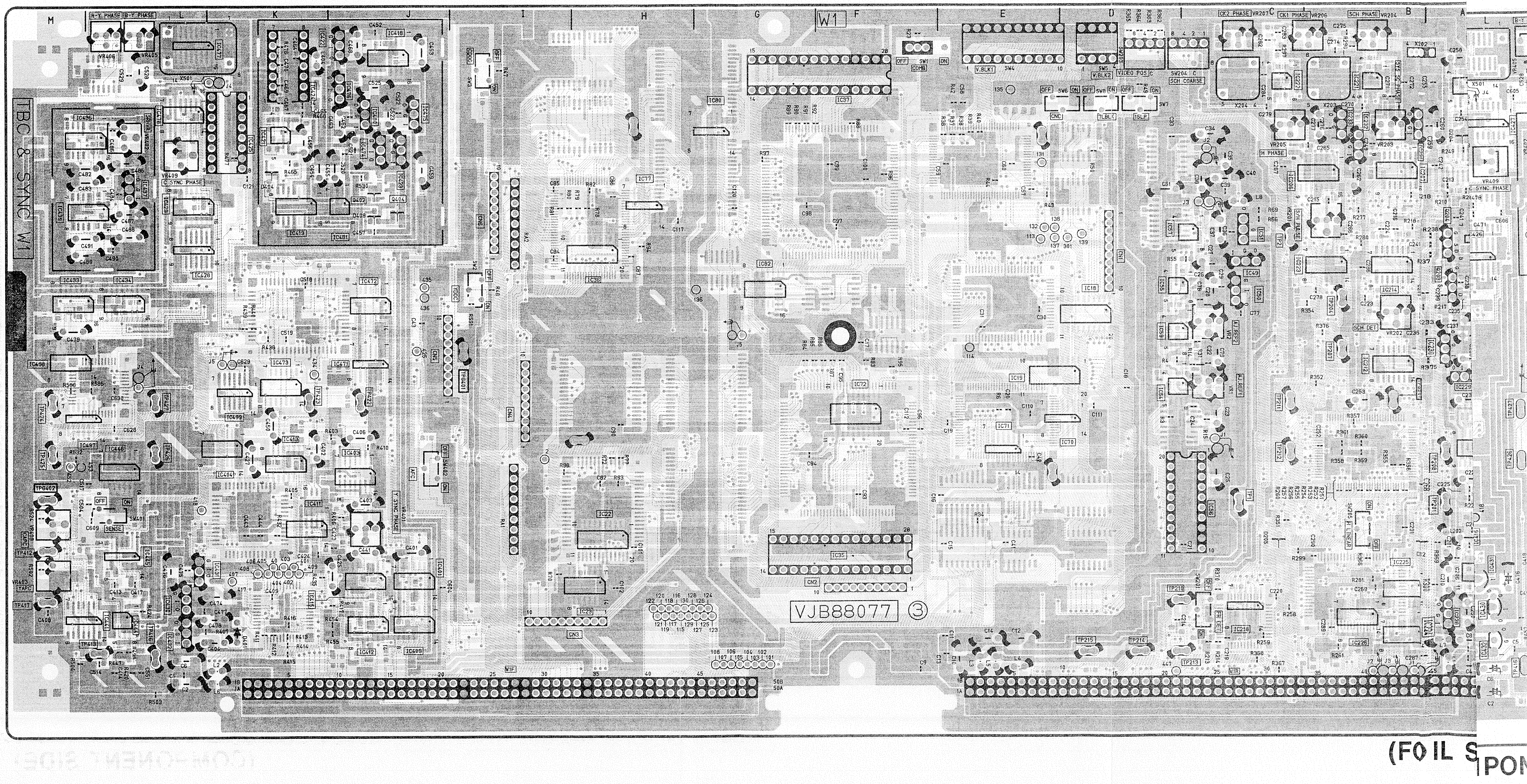
TBC & SYNC W1
W1
VJB88077 ③
(FOIL S
PON

CHIP PART INFORMATION

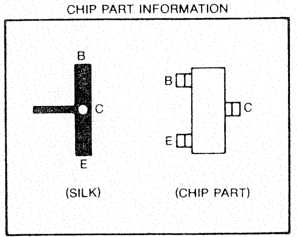
B
C
E
B
C
E
(SILK)
(CHIP PART)

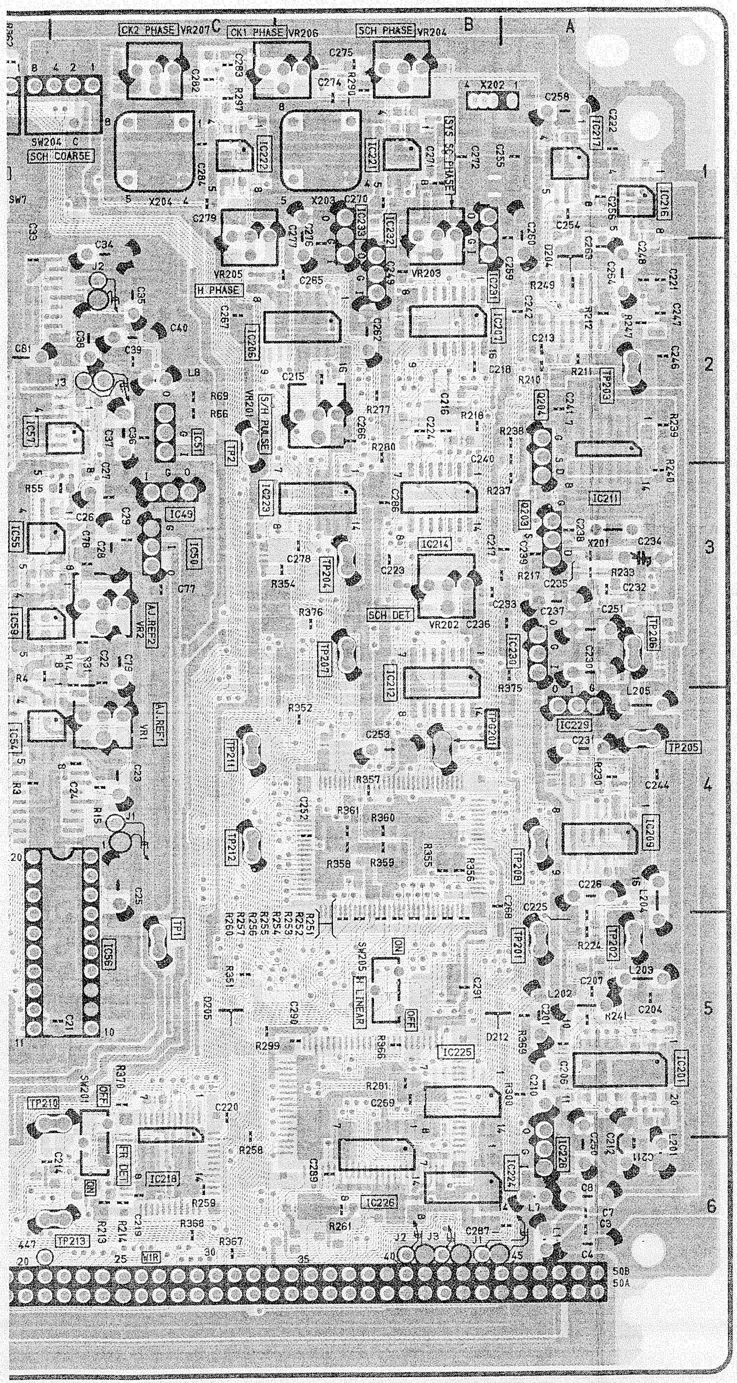
CK2 PHASE
CK1 PHASE
SCH PHASE
SW204 C
SCH COARSE
H PHASE
S/H PULSE
SCH DET
H.LINEAR
FR.DET
A
B
C
1
2
3
4
5
6

(FOIL SIDE)

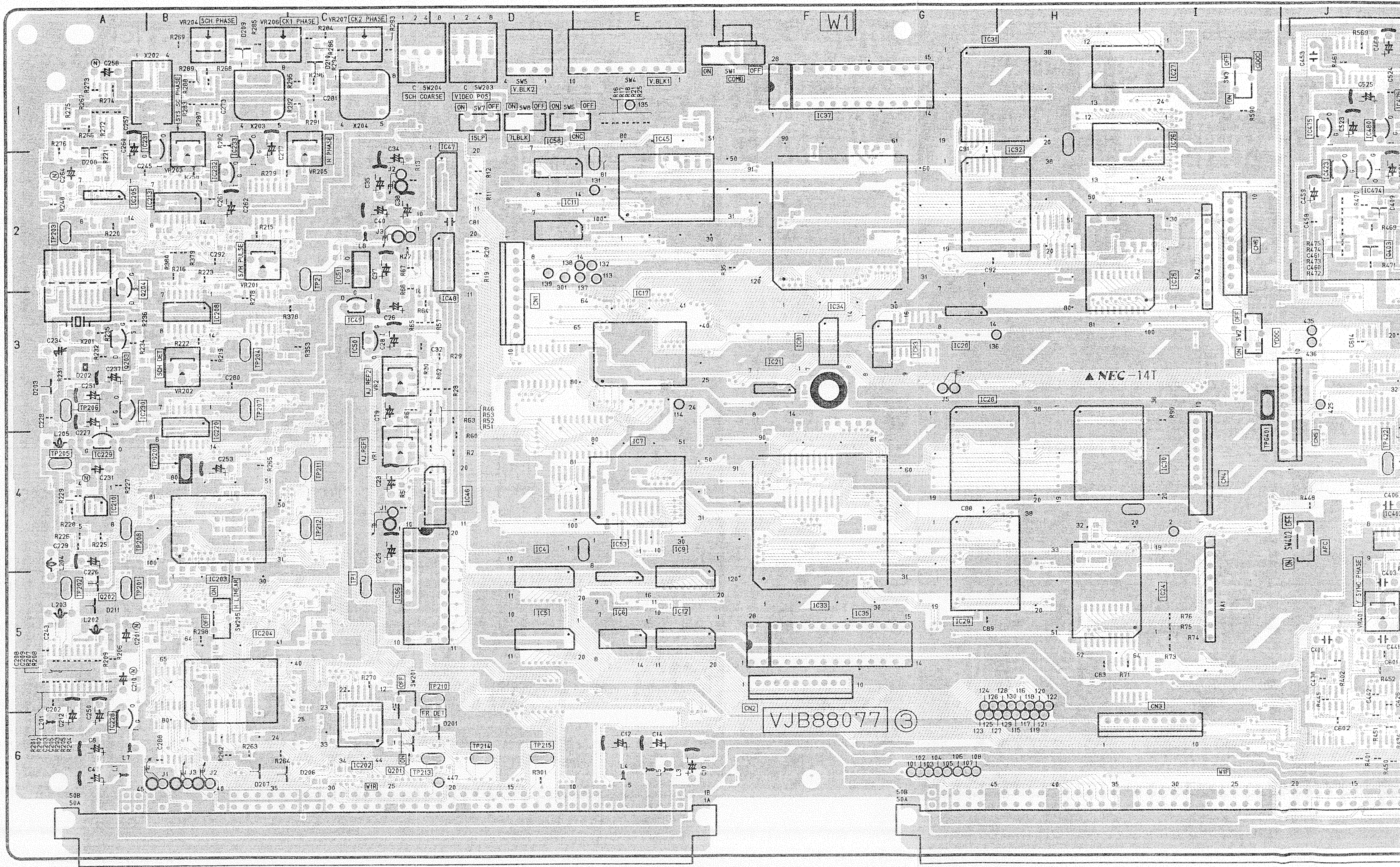
A
B
C
D
E
F
G
H
I
J
W1
SCH PHASE
CK1 PHASE
CK2 PHASE
SCH COARSE
VIDEO POS
V.BLK2
V.BLK1
COMB
S/H PULSE
SCH DET
H.LINEAR
FR.DET
▲NEC-14T
VJB88077 ③
1
2
3
4
5
6

W1 SUB P.C.BOARD

MODEL / TYPE	AU-665	AU-65	AU-63	AU-62
NTSC	VEP80666A	Not Used	Not Used	Not Used
PAL	———	Not Used	Not Used	Not Used

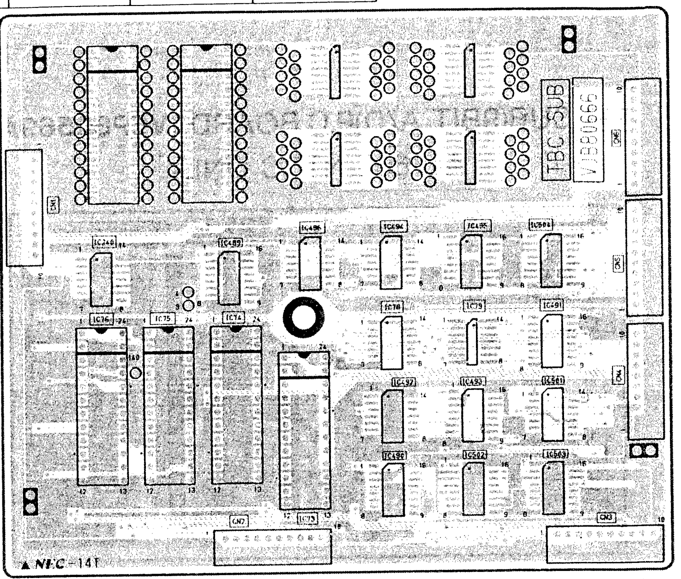
TBC SUB
VJB0666
▲NEC-14T

(FOIL SIDE)

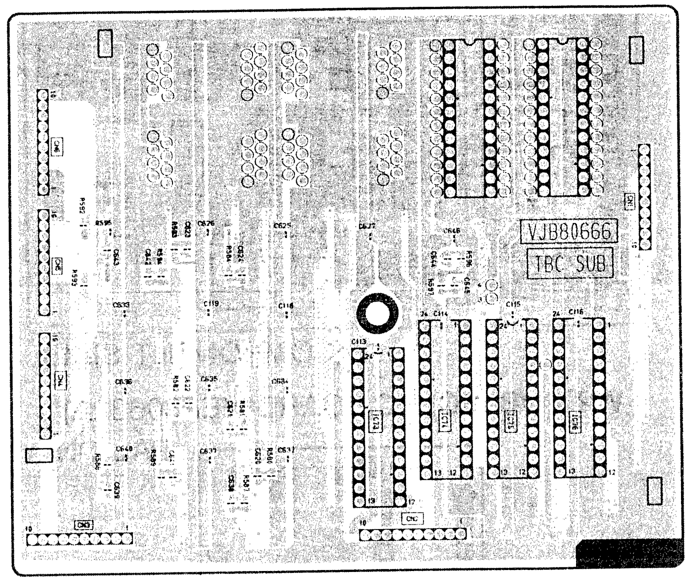
VJB80666
TBC SUB

(COMPONENT SIDE)

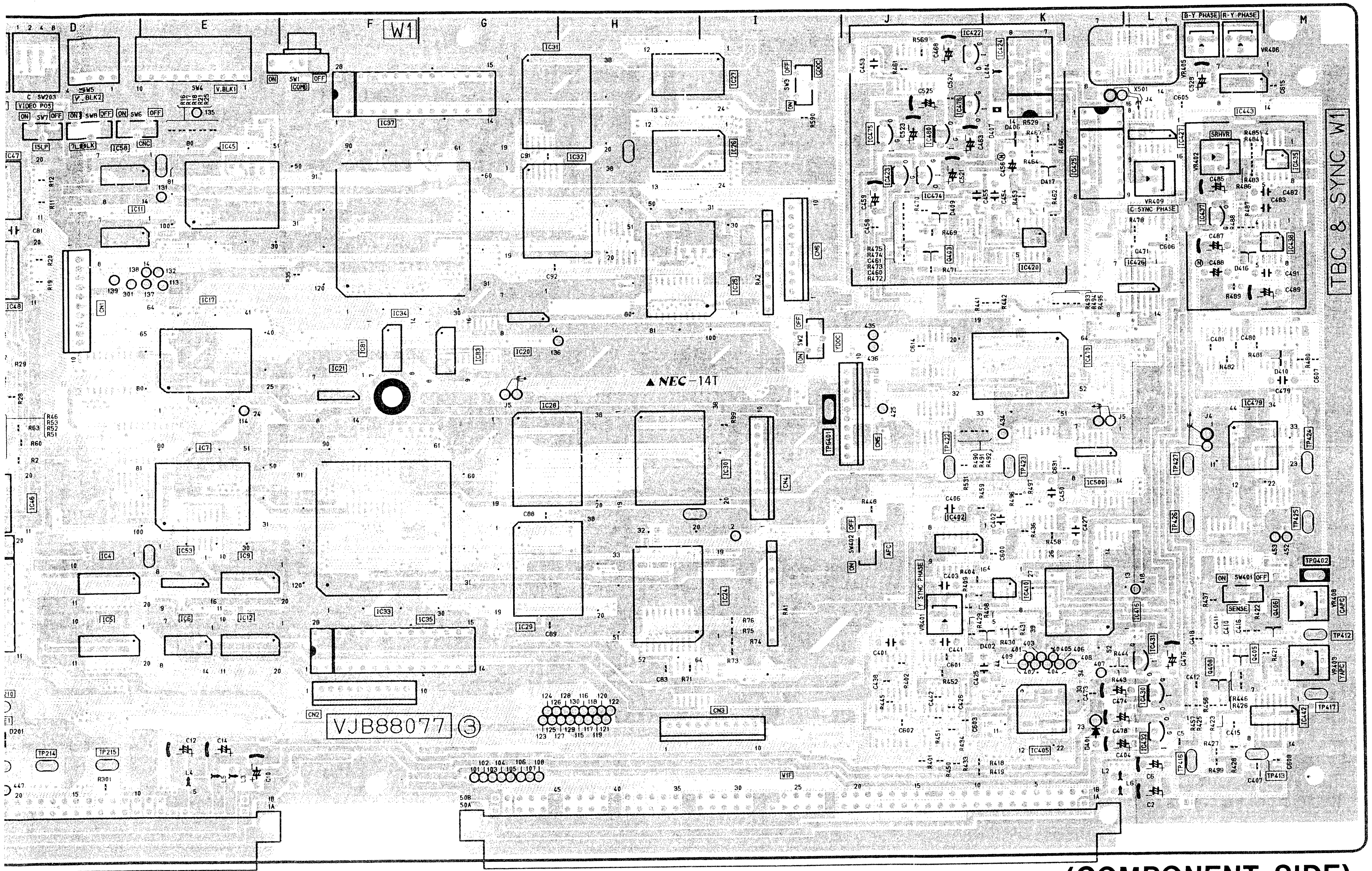
TBC & SYNC W1
W1
VJB88077 ③
▲NEC-14T
D
E
F
G
H
I
J
K
L
M
B-Y PHASE
R-Y PHASE
C-SYNC PHASE
Y SYNC PHASE
SENSE
SRHVR
VIDEO POS
V.BLK1
V.BLK2
COMB
SW1
SW4
SW5
SW203

(COMPONENT SIDE)

P.C. Board Location

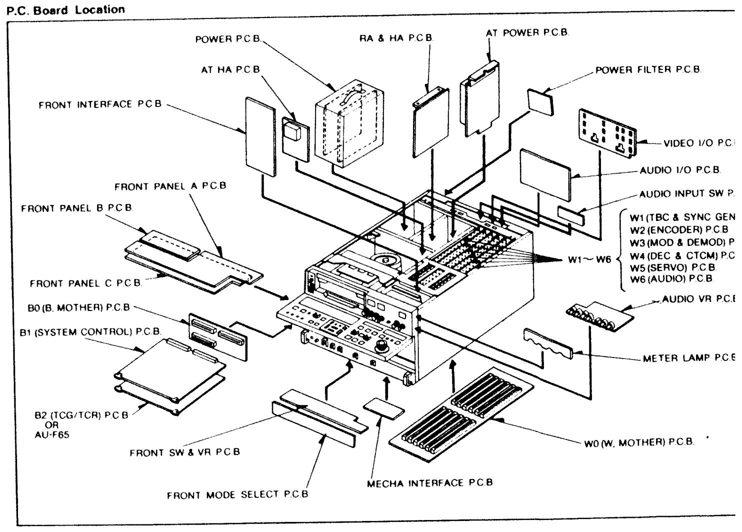
POWER P.C.B.
RA & HA P.C.B.
AT POWER P.C.B.
AT HA P.C.B.
POWER FILTER P.C.B.
FRONT INTERFACE P.C.B.
VIDEO I/O P.C.
AUDIO I/O P.C.B.
AUDIO INPUT SW P.
FRONT PANEL A P.C.B.
FRONT PANEL B P.C.B.
W1 (TBC & SYNC GEN
W2 (ENCODER) P.C.B
W3 (MOD & DEMOD) P
W4 (DEC & CTCM) P.C
W5 (SERVO) P.C.B.
W6 (AUDIO) P.C.B.
W1～W6
FRONT PANEL C P.C.B.
AUDIO VR P.C.
B0 (B. MOTHER) P.C.B.
B1 (SYSTEM CONTROL) P.C.B.
METER LAMP P.C.
B2 (TCG/TCR) P.C.B
OR
AU-F65
FRONT SW & VR P.C.B
WO (W. MOTHER) P.C.B.
MECHA INTERFACE P.C.B
FRONT MODE SELECT P.C.B

W2(ENCODER)P.C.BOARD

MODEL TYPE	AU-665	AU-65	AU-63	AU-62
NTSC	VEP88063B	VEP88063A	VEP88063A	VEP88063A
PAL	VEP88063E	VEP88063C	VEP88063C	VEP88063C

W2 SUB(9BIT A/D)P.C.BOARD **(VEP80569A)**

AU-665 NTSC ONLY

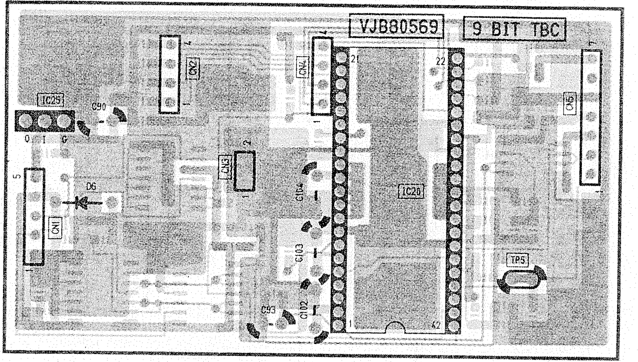
VJB80569
9 BIT TBC
IC25
IC26
TP5

(FOIL SIDE)

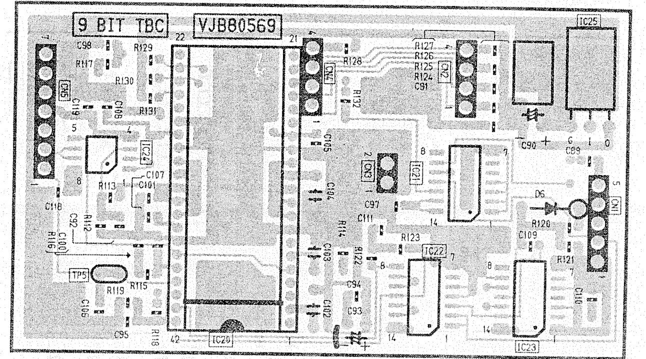
9 BIT TBC
VJB80569
IC25
IC22
IC23
TP5

(COMPONENT SIDE)

W2 SUB (SC) P.C.BOARD (VEP80632A)

PAL ONLY

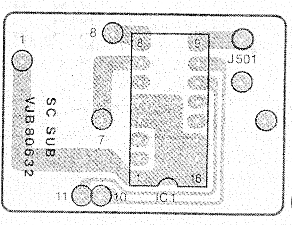
SC SUB
VJB80632
JS01
IC1

(FOIL SIDE)

P.C. Board Location

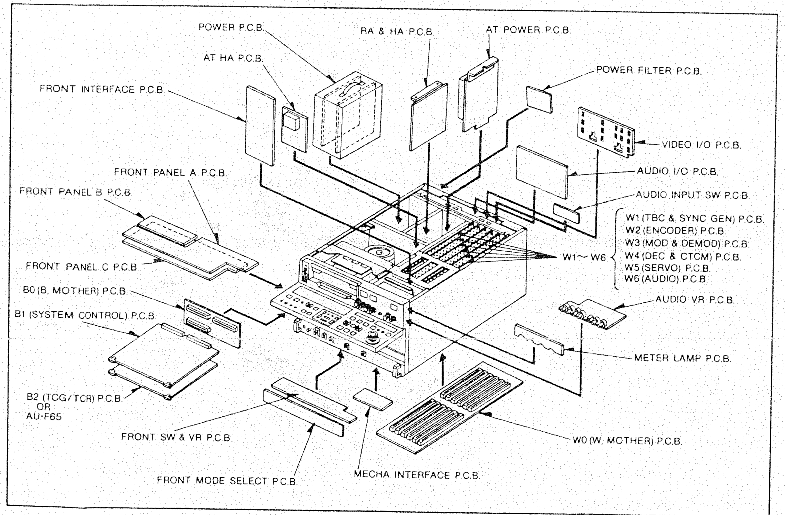
POWER P.C.B.
RA & HA P.C.B.
AT POWER P.C.B.
AT HA P.C.B.
POWER FILTER P.C.B.
FRONT INTERFACE P.C.B.
VIDEO I/O P.C.B.
FRONT PANEL A P.C.B.
AUDIO I/O P.C.B.
FRONT PANEL B P.C.B.
AUDIO INPUT SW P.C.B.
W1 (TBC & SYNC GEN) P.C.B.
W2 (ENCODER) P.C.B.
W3 (MOD & DEMOD) P.C.B.
W4 (DEC & CTCM) P.C.B.
W5 (SERVO) P.C.B.
W6 (AUDIO) P.C.B.
W1~W6
FRONT PANEL C P.C.B.
B0 (B. MOTHER) P.C.B.
B1 (SYSTEM CONTROL) P.C.B.
AUDIO VR P.C.B.
METER LAMP P.C.B.
B2 (TCG/TCR) P.C.B. OR AU-F65
FRONT SW & VR P.C.B.
W0 (W. MOTHER) P.C.B.
MECHA INTERFACE P.C.B.
FRONT MODE SELECT P.C.B.

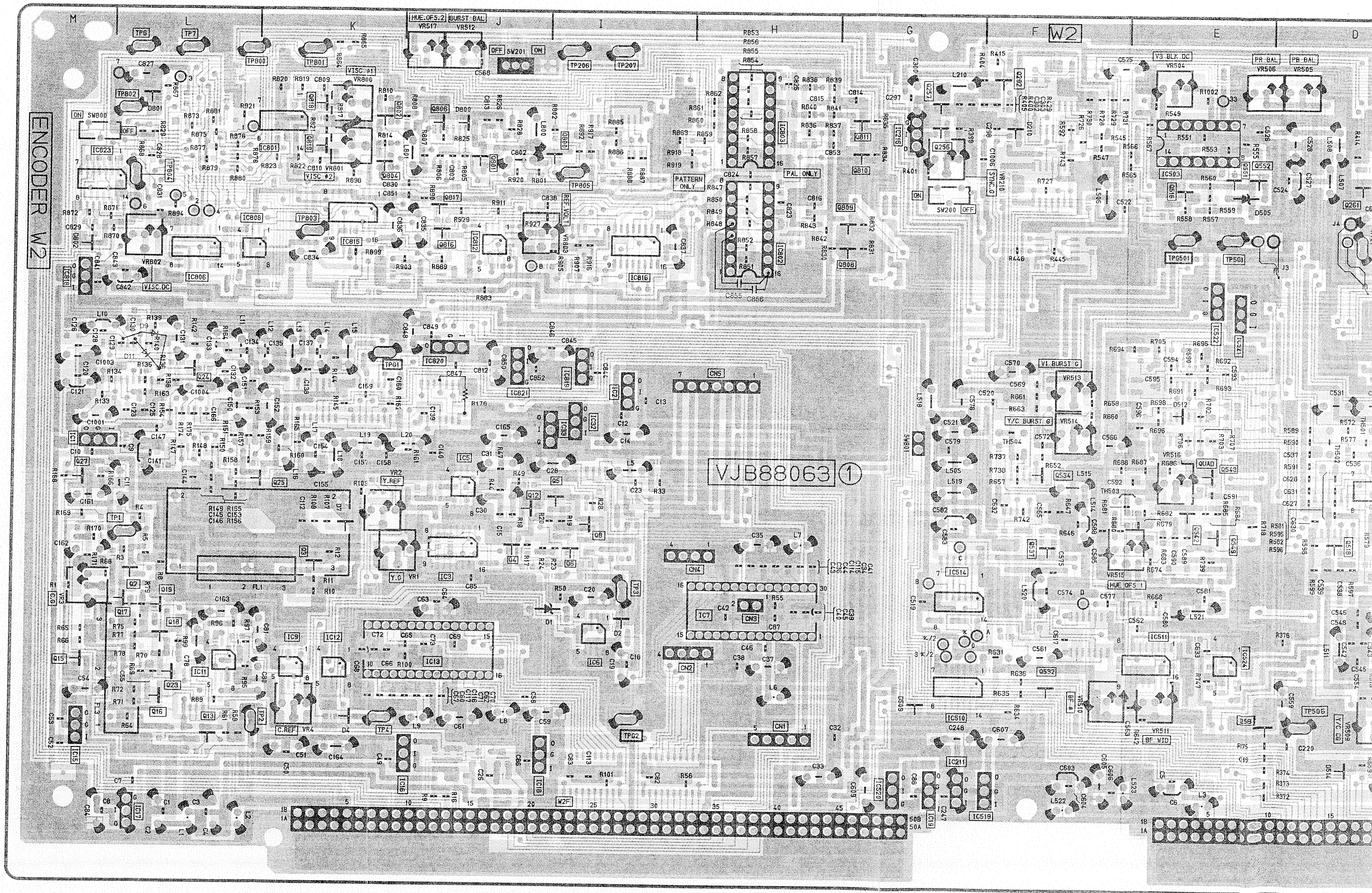
M
L
K
J
I
H
G
F
E
D
W2
ENCODER W2
HUE.OFS.2
BURST BAL
VR517
VR512
V3 BLK DC
VR504
PR BAL
VR506
PB BAL
VR505
PAL ONLY
PATTERN ONLY
VI BURST G
VR513
Y/C BURST Φ
VR514
HUE OFS 1
VR515
VJB88063 ①
CN1
CN2
CN3
CN4
CN5

CHIP PART INFORMATION

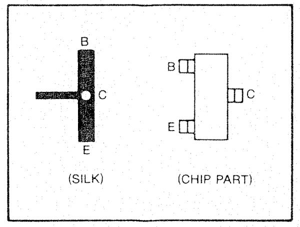
B
C
E
(SILK)
B
C
E
(CHIP PART)

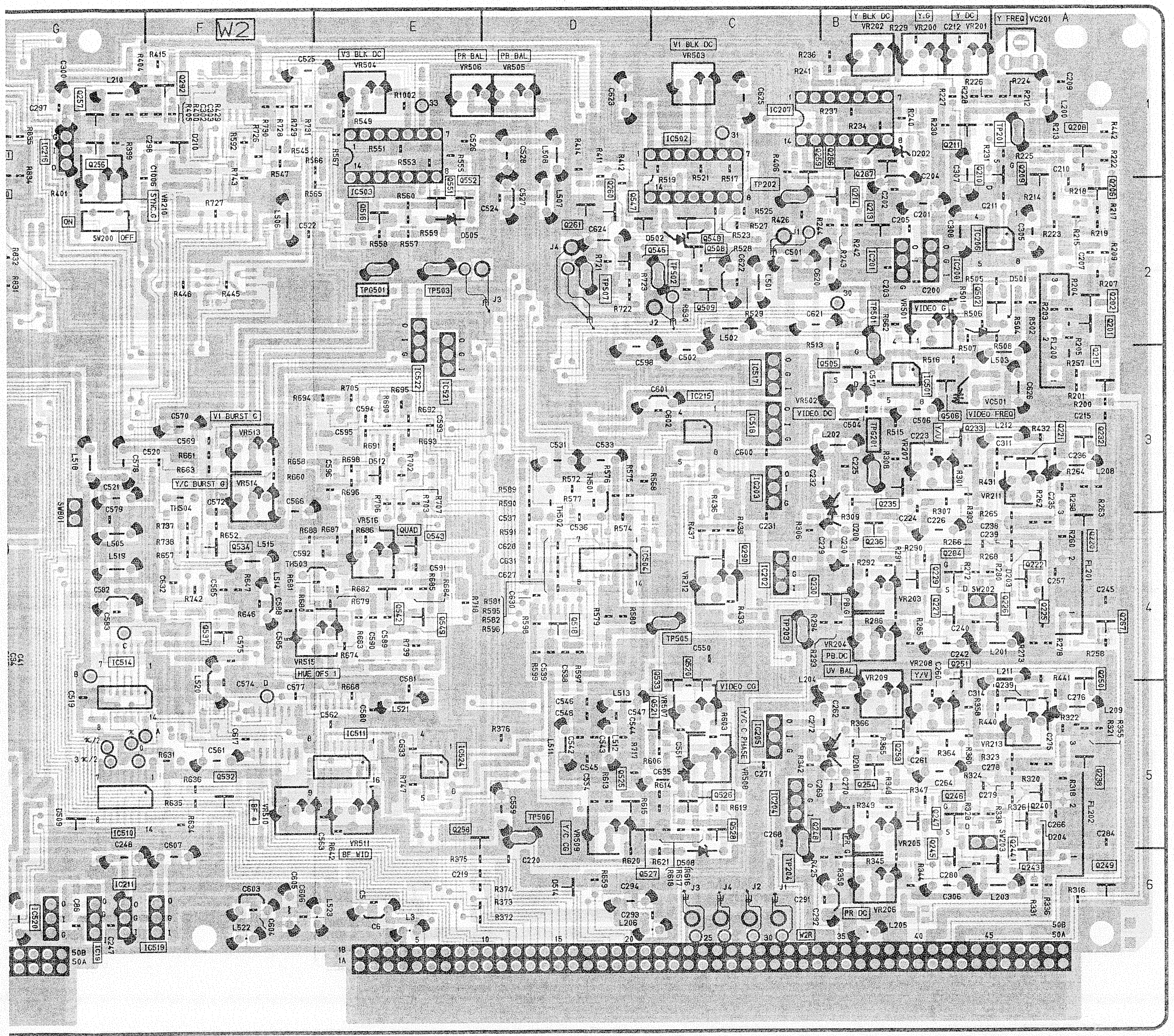

(FOIL SIDE)

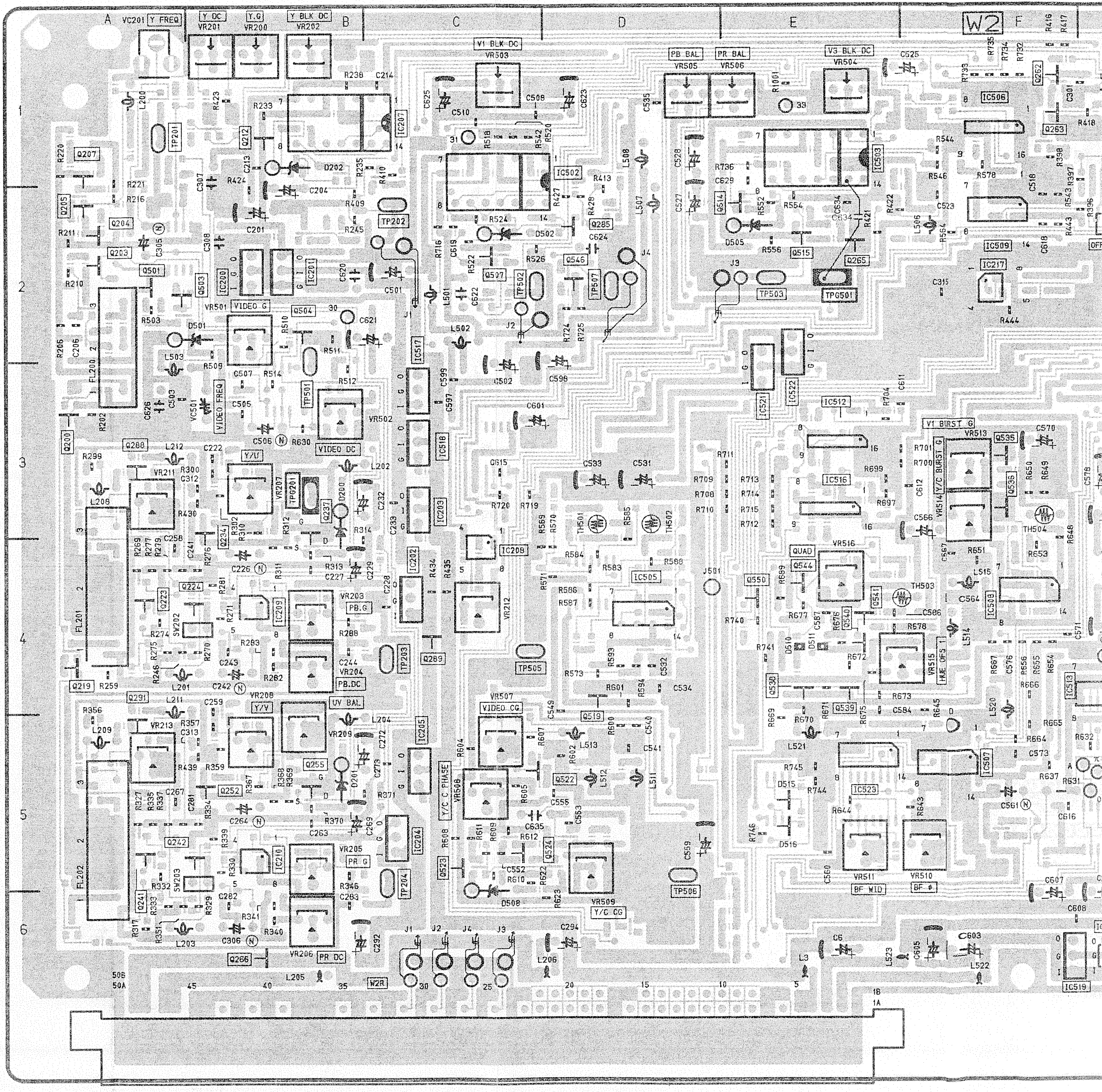

CHIP PART INFORMATION

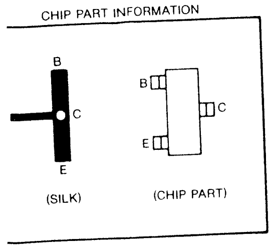
B
C
E
B
C
E
(SILK)
(CHIP PART)

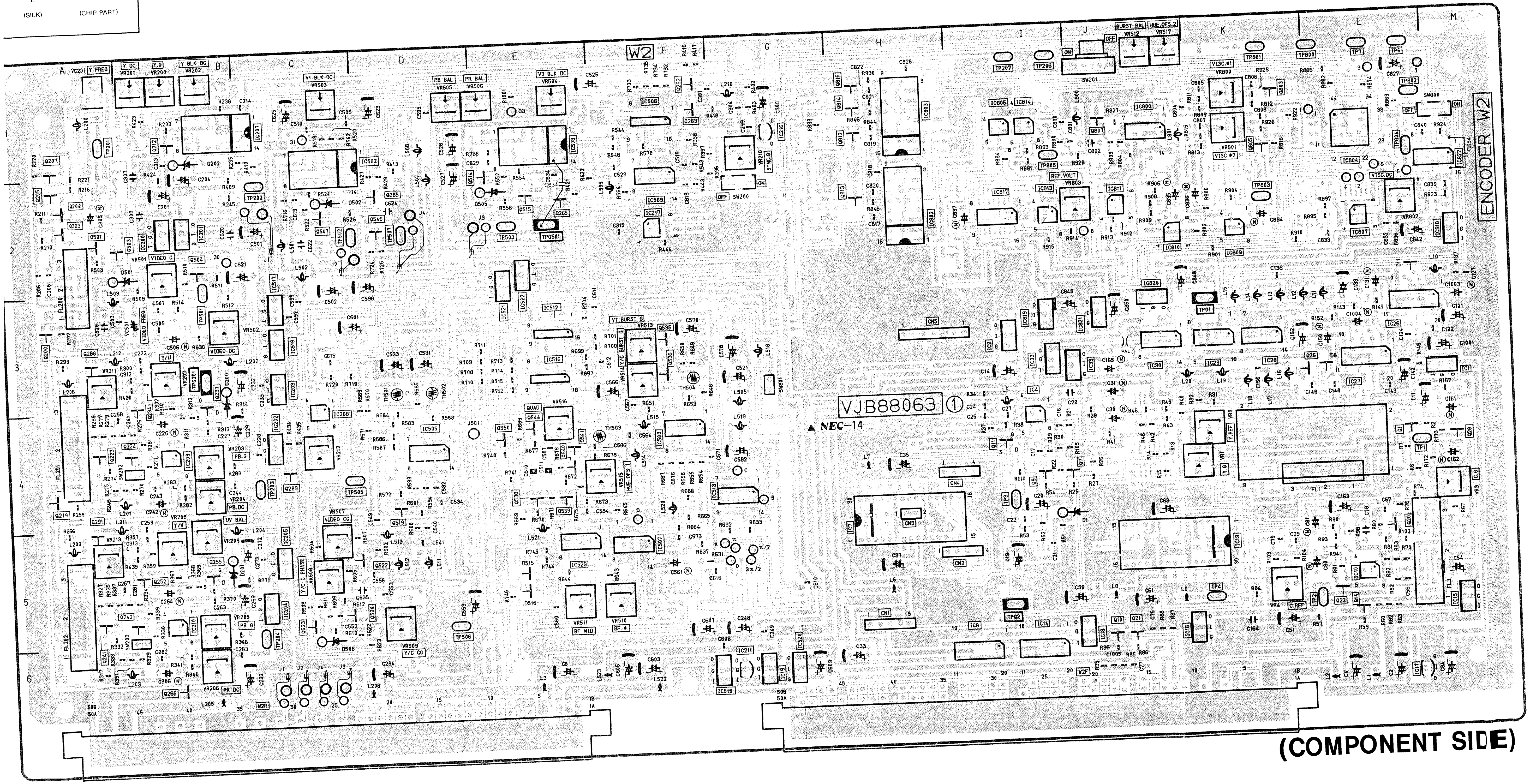
ENCODER W2
W2
VJB88063 ①
NEC-14

(COMPONENT SIDE)

W2 (ENCODER)

COMPONENT SIDE

Transistors

Q1	L-4
Q7	I-4
Q9	I-4
Q10	J-6
Q11	I-4
Q14	L-6
Q20	L-5
Q21	J-6
Q22	L-5
Q26	K-4
Q28	M-4
Q200	A-3
Q203	A-2
Q204	A-2
Q205	A-2
Q207	A-1
Q212	B-1
Q219	A-4
Q223	A-4
Q224	B-4
Q234	B-3
Q237	B-3
Q241	A-5
Q242	B-5
Q252	B-5
Q255	B-5
Q262	F-1
Q263	F-1
Q265	E-1
Q266	B-6
Q285	D-2
Q288	A-3
Q289	C-4
Q291	A-5
Q501	A-2
Q503	A-2
Q504	B-2
Q507	C-2
Q514	E-2
Q515	E-2
Q519	D-4
Q522	C-5
Q523	C-5
Q524	C-5
Q535	F-3
Q536	F-3
Q538	E-4
Q539	E-4
Q540	E-4
Q541	E-4
Q544	E-4
Q546	D-2
Q550	E-4
Q803	K-1
Q807	J-1
Q812	H-1
Q813	H-2
Q814	H-1
Q815	H-1

Integrated Circuits

IC1	M-4
IC2	I-3
IC4	I-4
IC7	H-5
IC8	I-6
IC10	L-5
IC13	K-5
IC14	I-6
IC15	M-6
IC16	J-6
IC17	L-6
IC18	J-6
IC19	G-6
IC26	L-3
IC27	L-3
IC28	K-3
IC29	K-3
IC30	J-3
IC32	I-3
IC33	I-3
IC200	B-2
IC201	B-2
IC202	C-4
IC203	C-3
IC204	C-5
IC205	C-5
IC207	B-1
IC208	C-4
IC209	B-4
IC210	B-5
IC211	G-6
IC216	G-1
IC217	F-2
IC502	C-1
IC503	E-1
IC505	D-4
IC506	F-1
IC507	F-5
IC508	F-4
IC509	F-2
IC512	E-3
IC513	G-4
IC516	E-3
IC517	C-3
IC518	C-3
IC519	F-6
IC520	G-6
IC521	E-3
IC522	E-2
IC823	E-5
IC800	J-1
IC802	H-2
IC803	H-1
IC804	L-1
IC805	I-1
IC807	L-2
IC809	K-2
IC810	J-2
IC811	J-2
IC813	I-2
IC814	I-1
IC817	I-2
IC818	M-2
IC819	I-3
IC820	J-3
IC821	J-3
IC822	M-2

Test Points

TP1	L-4
TP2	K-5
TP3	I-5
TP4	K-5
TP6	L-1
TP7	L-1
TP201	A-1
TP202	C-2
TP203	C-4
TP204	C-5
TP206	I-1
TP207	I-1
TP501	B-3
TP502	C-2
TP503	E-2
TP505	C-4
TP506	D-5
TP507	D-2
TP800	L-1
TP801	K-1
TP802	L-1
TP803	K-2
TP804	L-2
TP805	I-2

TP GND

TPG1	K-3
TPG2	I-5
TPG201	B-3
TPG501	E-2

Adjustments

VR1	K-4
VR2	K-4
VR3	M-5
VR4	K-5
VR200	B-1
VR201	B-1
VR202	B-1
VR203	B-4
VR204	B-4
VR205	B-5
VR206	B-6
VR207	B-3
VR208	B-5
VR209	B-5
VR210	G-1
VR211	A-3
VR212	C-4
VR213	A-5
VR501	B-2
VR502	B-3
VR503	C-1
VR504	E-1
VR505	D-1
VR506	E-1
VR507	C-5
VR508	C-5
VR509	D-5
VR510	F-5
VR511	E-5
VR512	J-1
VR513	F-3
VR514	F-3
VR515	F-4
VR516	E-4
VR517	J-1
VR800	K-1
VR801	K-1
VR802	L-2
VR803	J-2
VR805	K-2

Others

VC201	A-1
VC501	B-3
CN1	H-6
CN2	H-5
CN3	H-5
CN4	H-4
CN5	H-3

FOIL SIDE

Transistor

Q2	L-4
Q3	K-4
Q4	J-4
Q5	I-4
Q6	I-4
Q8	I-4
Q12	J-4
Q13	L-6
Q15	M-5
Q16	L-5
Q17	L-5
Q18	L-5
Q19	L-5
Q23	L-5
Q24	L-3
Q25	K-4
Q27	M-4
Q201	A-2
Q202	A-2
Q206	A-2
Q208	A-1
Q209	A-1
Q210	A-1
Q211	B-1
Q213	B-2
Q214	B-2
Q215	A-3
Q220	A-4
Q221	A-3
Q222	A-4
Q225	A-4
Q226	A-4
Q227	B-4
Q229	B-4
Q230	B-4
Q232	A-3
Q233	B-3
Q235	B-3
Q236	B-4
Q238	A-5
Q239	A-5
Q240	A-5
Q243	A-6
Q244	A-5
Q245	B-6
Q246	B-5
Q247	B-5
Q248	B-5
Q249	A-6
Q250	A-4
Q251	B-4
Q253	B-5
Q254	B-5
Q256	G-1
Q257	G-1
Q258	E-5
Q259	C-1
Q260	D-2
Q261	D-2
Q267	A-4
Q284	B-4
Q286	B-1
Q287	B-1
Q290	C-4
Q292	F-1
Q502	A-2
Q505	B-3
Q506	B-3
Q508	C-2
Q509	C-2
Q516	E-2
Q518	D-4
Q520	C-4
Q521	C-5
Q525	D-5
Q526	C-5
Q527	D-5
Q528	C-5
Q532	F-5
Q533	C-4
Q534	F-4
Q537	F-4
Q542	E-4
Q543	E-4
Q545	D-2
Q547	D-2
Q548	C-2
Q549	E-4
Q551	E-2
Q552	E-2
Q800	I-1
Q801	J-2
Q802	K-1
Q804	K-2
Q806	J-1
Q808	G-2
Q809	G-2
Q810	G-1
Q811	G-1
Q816	J-2
Q817	J-2
Q818	K-1
Q819	K-1

Integrated Circuits

IC3	J-4
IC5	J-4
IC6	I-5
IC9	K-5
IC11	L-5
IC12	K-5
IC206	A-2
IC215	C-3
IC501	B-3
IC504	D-4
IC510	G-5
IC511	E-5
IC514	G-5
IC524	E-5
IC801	K-1
IC806	L-2
IC808	L-2
IC812	J-2
IC815	K-2
IC816	I-2
IC823	M-2

W3 (MOD & DEMOD)

COMPONENT SIDE

Transistors

Q3	C-3
Q4	C-3
Q8	C-3
Q11	C-3
Q12	C-4
Q15	D-2
Q20	B-5
Q208	A-3
Q216	B-6
Q311	H-2
Q315	F-3
Q319	E-1
Q322	H-6
Q323	G-5
Q329	I-2
Q330	J-2
Q332	I-2
Q337	H-4
Q346	J-5
Q350	J-5
Q351	J-6
Q360	I-5
Q366	M-4
Q373	M-1
Q374	L-1
Q375	M-1
Q385	F-1
Q386	J-5
Q718	K-1
Q729	I-4
Q736	K-5
Q739	K-6
Q740	L-5
Q760	I-4
Q762	L-6

Integrated Circuits

IC1	C-2
IC2	C-2
IC3	C-2
IC4	C-2
IC5	C-4
IC6	C-6
IC7	C-5
IC9	D-6
IC10	F-6
IC11	D-2
IC12	D-1
IC13	D-1
IC14	E-1
IC15	M-6
IC16	D-6
IC17	B-6
IC201	B-2
IC203	B-4
IC301	F-4
IC302	F-4
IC303	E-4
IC304	F-4
IC305	G-2
IC306	F-2
IC307	G-1
IC308	G-4
IC309	G-5
IC310	I-2
IC311	I-2
IC312	I-3
IC313	J-3
IC314	J-3
IC315	H-4
IC316	H-5
IC317	I-5
IC319	J-4
IC323	M-3
IC326	E-1
IC701	E-5
IC702	E-5
IC703	D-5
IC704	D-5
IC705	E-4
IC706	E-2
IC707	K-1
IC708	K-2
IC709	L-2
IC710	L-2
IC711	L-3
IC712	I-4
IC716	L-4
IC720	M-5

Test Point

TP1	C-3
TP3	C-3
TP4	C-3
TP5	C-4
TP6	C-5
TP7	B-6
TP8	C-5
TP201	A-2
TP202	B-2
TP203	A-2
TP204	A-4
TP205	B-4
TP206	B-4
TP207	B-6
TP301	F-3
TP302	F-2
TP303	F-4
TP304	H-2
TP305	H-5
TP306	G-5
TP307	I-3
TP308	H-4
TP309	K-5
TP310	J-5
TP311	K-5
TP312	M-3
TP313	M-3
TP315	H-5
TP316	H-2
TP317	L-2
TP701	E-4
TP702	E-3
TP703	L-1
TP704	I-4
TP705	I-5
TP706	L-4
TP707	K-5
TP708	L-6
TP709	M-5
TP710	M-5
TP711	K-1
TP712	L-4

TP GND

TPG1	C-1
TPG2	C-6
TPG201	B-1
TPG202	A-5
TPG301	G-5
TPG302	E-2
TPG303	J-5
TPG701	E-5
TPG702	D-3
TPG703	L-5

Adjustments

VR1	C-1
VR3	C-2
VR4	C-4
VR5	C-4
VR6	C-4
VR7	C-1
VR8	C-4
VR9	C-4
VR10	C-5
VR11	C-5
VR201	B-1
VR202	B-3
VR203	B-3
VR204	B-3
VR205	A-3
VR206	B-3
VR207	B-4
VR208	B-3
VR209	A-4
VR301	F-5
VR302	F-5
VR303	F-5
VR304	F-5
VR305	E-5
VR306	E-5
VR307	F-5
VR308	F-5
VR309	F-3
VR310	F-1
VR311	E-2
VR312	F-1
VR313	J-1
VR314	J-1
VR315	J-1
VR316	J-1
VR317	I-1
VR318	J-2
VR319	J-2
VR320	H-3
VR321	H-3
VR322	I-4
VR323	I-4
VR324	I-5
VR325	I-5
VR326	L-3
VR327	K-1
VR328	M-2
VR329	M-1
VR330	M-1
VR331	M-3
VR701	E-6
VR702	E-6
VR703	D-6
VR704	D-6
VR709	E-3
VR710	G-1
VR711	G-1
VR712	G-1
VR713	H-1
VR714	J-2
VR715	L-1
VR716	K-3
VR717	H-3
VR718	I-3
VR719	K-4
VR720	K-6
VR721	K-5
VR722	L-5
VR723	L-5
VR724	K-1
VR725	M-4
VR726	M-5

Others

VC1	C-5
VC201	B-4
VC301	H-2
VC302	J-5
VC701	K-2

FOIL SIDE

Transistors

Q1	C-1
Q2	C-3
Q5	C-3
Q6	C-3
Q7	B-3
Q9	C-3
Q10	B-3
Q13	C-4
Q14	C-4
Q16	C-5
Q17	C-6
Q18	C-6
Q19	B-5
Q21	C-4
Q201	B-1
Q202	B-2
Q203	B-2
Q204	B-2
Q205	A-3
Q206	B-2
Q207	B-3
Q209	A-3
Q210	B-3
Q211	B-3
Q212	A-3
Q213	B-5
Q214	B-5
Q215	B-5
Q217	B-6
Q218	B-6
Q219	B-5
Q220	B-4
Q301	F-5
Q302	F-5
Q303	F-5
Q304	F-5
Q305	E-5
Q306	E-5
Q307	F-5
Q308	F-5
Q309	F-4
Q310	G-2
Q313	F-3
Q314	F-3
Q316	F-2
Q317	F-2
Q318	E-2
Q320	H-2
Q321	G-4
Q324	I-1
Q326	I-2
Q327	H-2
Q331	I-3
Q333	I-2
Q334	I-2
Q335	I-3
Q336	H-3
Q338	H-5
Q339	I-5
Q340	I-5
Q341	J-3
Q342	J-3
Q343	J-3
Q344	J-5
Q345	J-5
Q347	J-5
Q348	J-5
Q349	J-5
Q352	J-5
Q353	J-5
Q356	I-5
Q357	I-5
Q358	I-5
Q359	I-5
Q361	I-5
Q362	L-3
Q363	M-3
Q364	M-3
Q365	M-4
Q367	M-4
Q368	M-3
Q369	M-2
Q370	M-2
Q371	M-2
Q372	L-2
Q376	J-3
Q377	J-3
Q378	J-3
Q379	K-4
Q380	H-2
Q381	H-2
Q382	H-5
Q383	H-5
Q384	H-5
Q387	J-6
Q388	J-5
Q389	J-6
Q701	E-5
Q702	E-5
Q703	D-5
Q704	D-5
Q705	D-5
Q710	E-4
Q711	D-4
Q712	E-4
Q713	D-4
Q714	E-3
Q715	E-3
Q716	J-2
Q719	K-1
Q721	K-1
Q722	K-2
Q723	K-1
Q724	K-1
Q725	K-2
Q726	L-1
Q727	L-1
Q728	I-3
Q730	I-4
Q731	I-5
Q732	K-4
Q733	K-5
Q734	K-5
Q735	K-5
Q737	L-5
Q738	L-5
Q741	L-6
Q742	L-5
Q745	M-5
Q746	M-5
Q747	L-6
Q748	L-6
Q749	L-6
Q750	L-6
Q751	M-5
Q753	M-4
Q754	K-3
Q755	L-3
Q756	L-3
Q757	L-4
Q758	I-4
Q759	I-4
Q761	L-6
Q763	L-6
Q764	L-6

Integrated Circuits

IC202	A-4
IC322	L-3
IC324	M-2
IC325	M-4
IC719	M-5
IC721	M-4
IC722	M-6

W3 (MOD & DEMOD) P.C.BOARD

MODEL / TYPE	AU-665	AU-65	AU-63	AU-62
NTSC	VEP83098B	VEP83098A	VEP83098D	VEP83098C
PAL	VEP83098H	VEP83098E	VEP83098F	VEP83098G

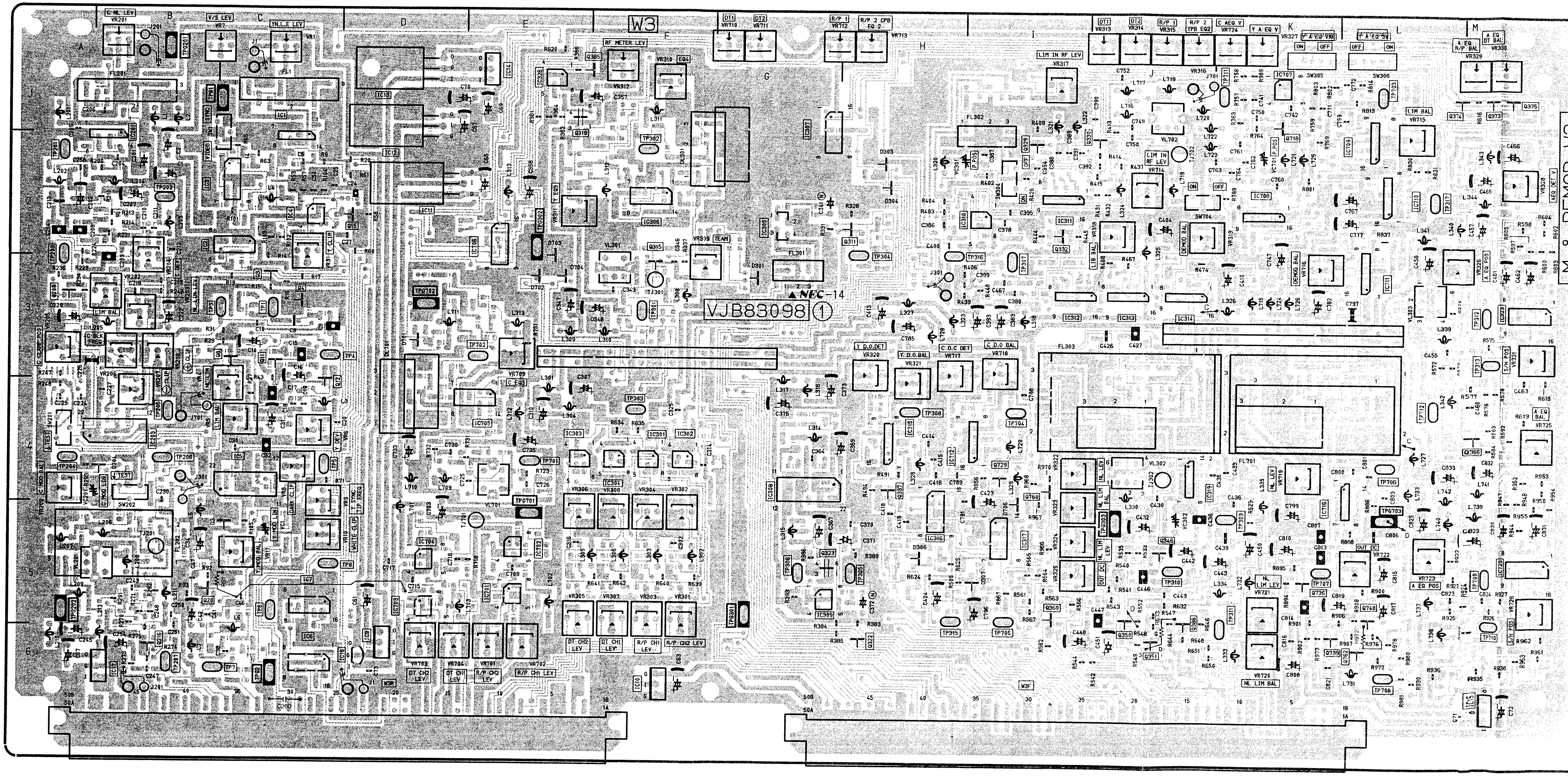

W3
VJB83098 ①
NEC-14
C NL LEV
VR201
V/S LEV
VR7
Y NL LE LEV
RF METER LEV
VR312
DT1
VR710
DT2
VR711
R/P 1
VR712
R/P 2 CPB EQ 2
VR713
LIM IN RF LEV
VR317
DT1
VR313
DT2
VR314
R/P 1
VR315
R/P 2 YPB EQ2
C AEQ V
VR724
Y A EQ V
VR327
Y D.O.DET
VR320
Y D.O.BAL
VR321
C.D.C DET
VR717
C D.O BAL
VR716
DT CH2 LEV
VR703
DT CH1 LEV
VR704
R/P CH2 LEV
VR701
R/P CH1 LEV
VR702
DT CH2 LEV
VR305
DT CH1 LEV
VR307
R/P CH1 LEV
VR303
R/P CH2 LEV
VR301
LIM BAL
TEST
SW201
SW202
VL301
VL302
VL702
FL301
FL302
FL303
FL701
SW305
SW306
SW704
NL LIM BAL
VR720
NL LIM LEV
VR721
OUT DC
VR722
A EQ POS
VR723
A EQ DT BAL
VR330
A EQ BAL
VR725
50B
50A
1B
1A
W3F
W3R
A
B
C
D
E
F
G
H
I
J
K
L
M

(COMPONENT SIDE)

CHIP PART INFORMATION

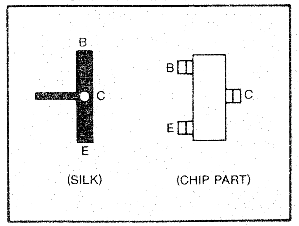
B
C
E
B
C
E
(SILK)
(CHIP PART)

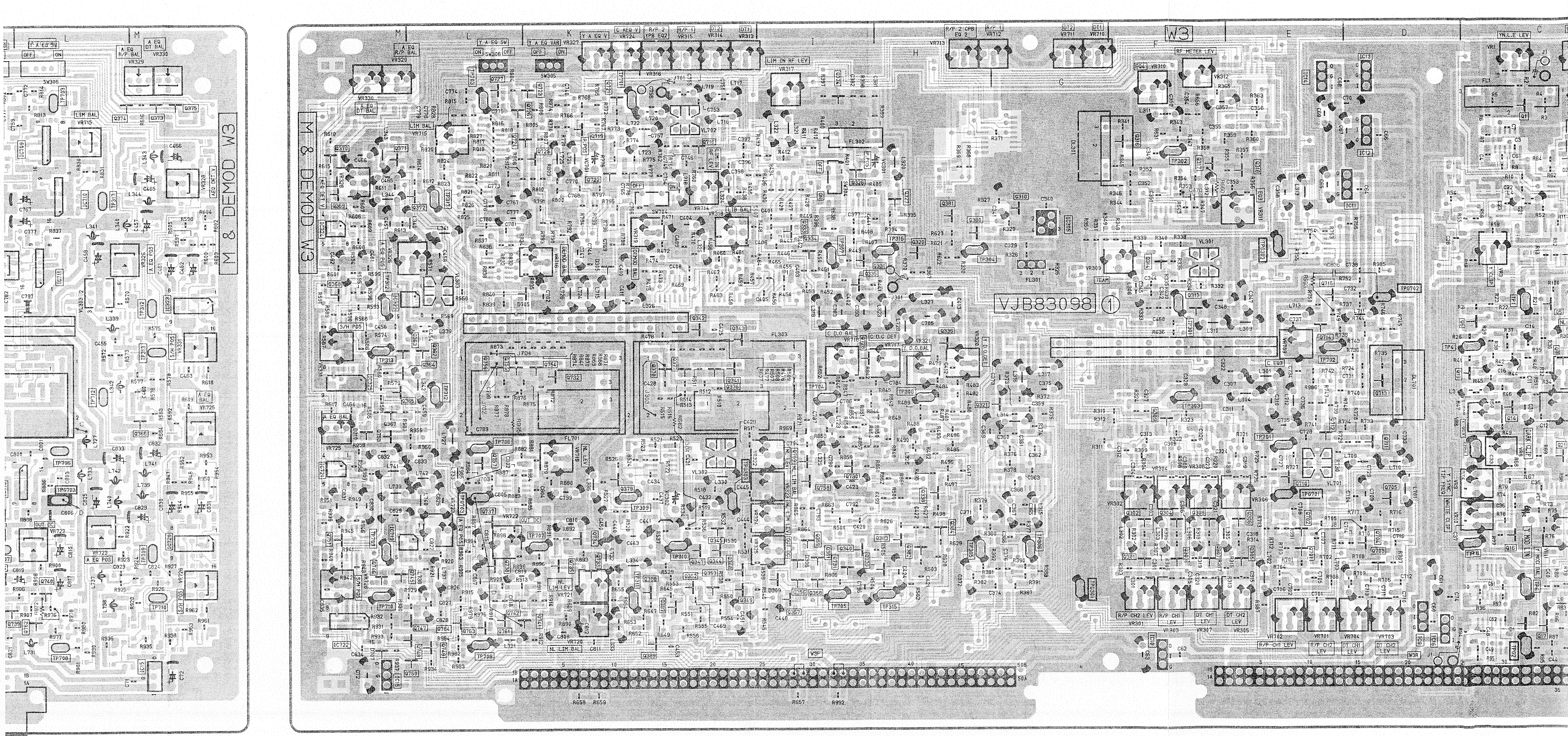
M & DEMOD W3
M & DEMOD W3
W3
VJB83098 ①

(COMPONENT SIDE)

W3 SUB P.C.BOARD (VEP80667A)

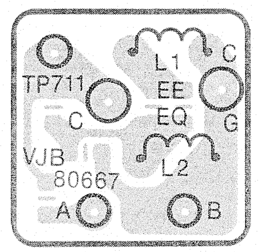
TP711
L1
EE
EQ
C
G
VJB
80667
L2
A
B

AU-65 PAL
ONLY

(FOIL SIDE)

W3 SUB (Y DO BLK) P.C.BOARD (VEP80646A)

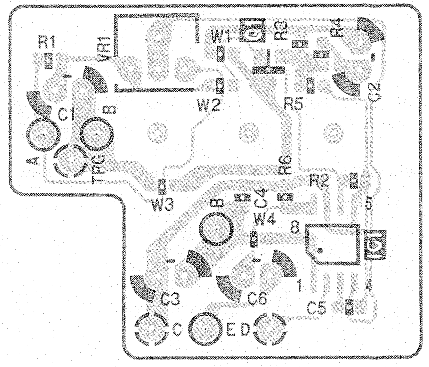
R1
VR1
W1
R3
R4
C1
W2
R5
C2
TPG
R6
W3
R2
C4
W4
C3
C6
C5

AU-665 N
ONLY

(FOIL SIDE)

W3 SUB (C DO BLK) P.C.BOARD (VEP80647A)

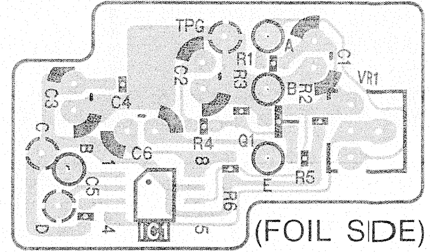
TPG
R1
R3
C1
VR1
C2
C3
C4
R2
C6
R4
Q1
R5
C5
R6
IC1

AU-665 N
ONLY

(FOIL SIDE)

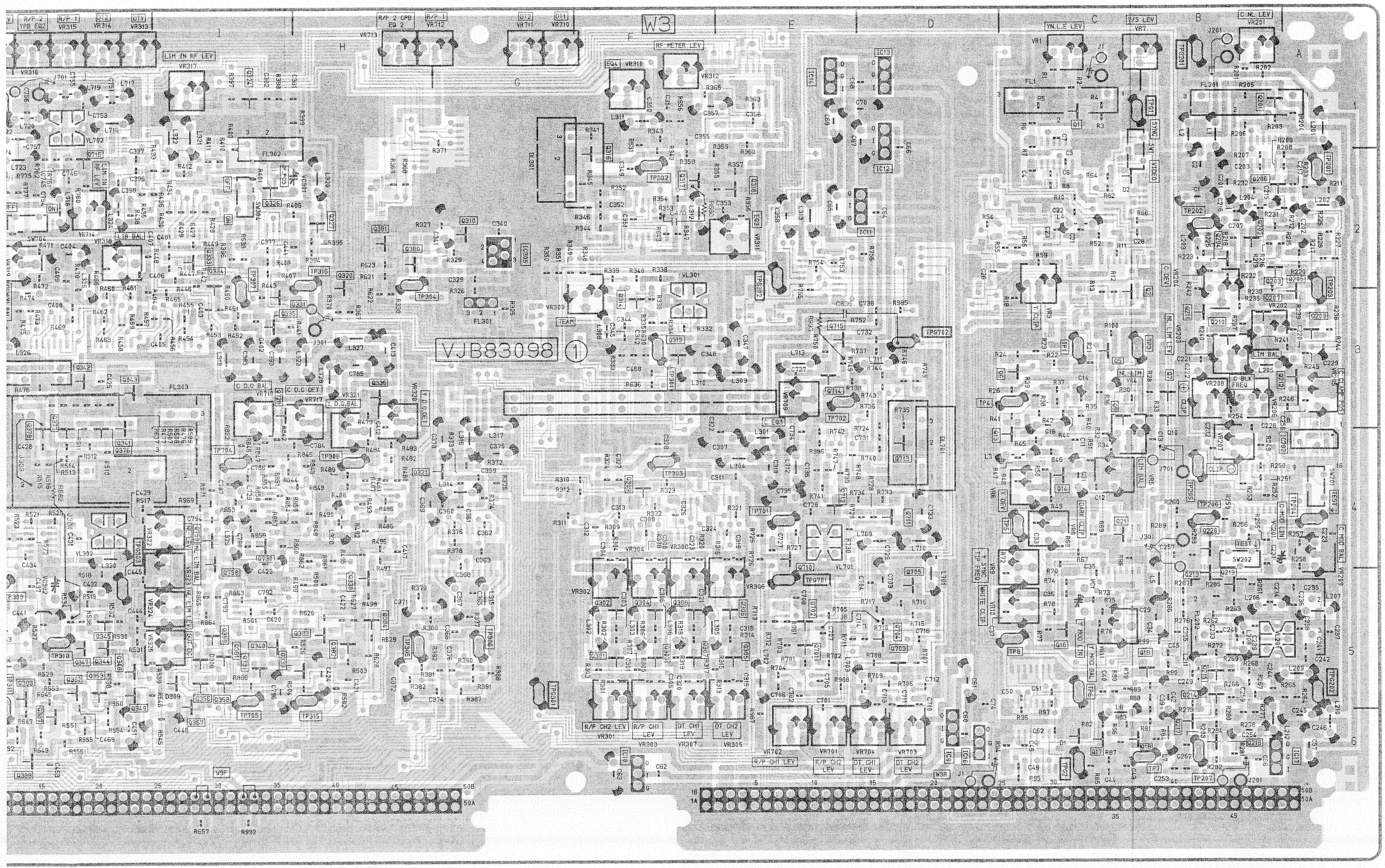
W3
VJB83098 ①
VR1 R/P 2 YPB EQ2
R/P 1 VR315
DT2 VR314
DT1 VR313
R/P 2 CPB EQ 2
R/P 1 VR312
DT2 VR711
DT1 VR710
RF METER LEV
YN L.E LEV
T/S LEV VR7
C NL LEV VR201
LIM IN RF LEV
R/P CH2 LEV VR301
R/P CH1 LEV VR303
DT CH1 LEV VR307
DT CH2 LEV VR305
R/P CH1 LEV VR702
R/P CH2 LEV
DT CH1 LEV
DT CH2 LEV
W3F
W3R
J201
50B
50A
1B
1A
R657
R992

(FOIL SIDE)

P.C. Board Location

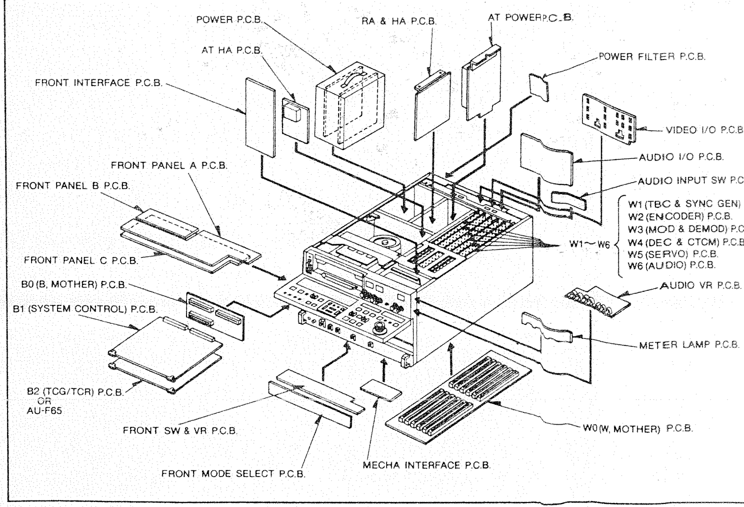
POWER P.C.B.
RA & HA P.C.B.
AT POWER P.C.B.
AT HA P.C.B.
POWER FILTER P.C.B.
FRONT INTERFACE P.C.B.
VIDEO I/O P.C.B.
AUDIO I/O P.C.B.
FRONT PANEL A P.C.B.
AUDIO INPUT SW P.C.
FRONT PANEL B P.C.B.
W1 (TBC & SYNC GEN)
W2 (ENCODER) P.C.B.
W3 (MOD & DEMOD) P.C.
W4 (DEC & CTCM) P.C.B.
W5 (SERVO) P.C.B.
W6 (AUDIO) P.C.B.
W1~W6
FRONT PANEL C P.C.B.
AUDIO VR P.C.B.
B0 (B, MOTHER) P.C.B.
B1 (SYSTEM CONTROL) P.C.B.
METER LAMP P.C.B.
B2 (TCG/TCR) P.C.B. OR AU-F65
FRONT SW & VR P.C.B.
W0 (W, MOTHER) P.C.B.
FRONT MODE SELECT P.C.B.
MECHA INTERFACE P.C.B.

REVERSE SIDE

W4 DECODER & CTCM P.C.BO

W4(DECODER&CTCM)P.C.BOARD

MODEL / TYPE	AU-665	AU-65	AU-63	AU-62
NTSC	VEP83099A	VEP83099A	Not Used	Not Used
PAL	——	VEP83099B	Not Used	Not Used

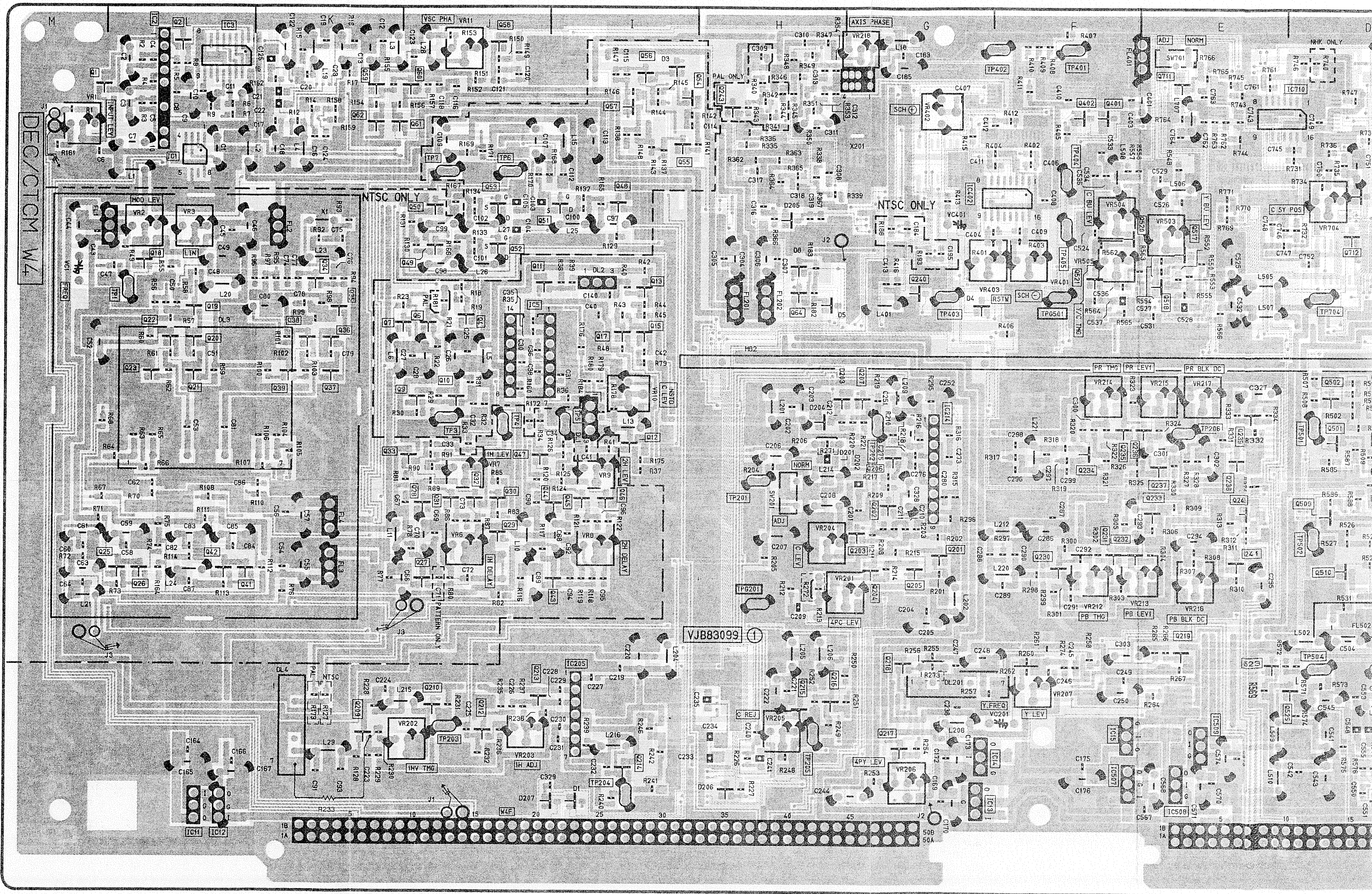
DEC/CTCM W4
NTSC ONLY
PAL ONLY
NHK ONLY
VJB83099 ①
M
L
K
J
I
H
G
F
E
D

P.C. Board Location

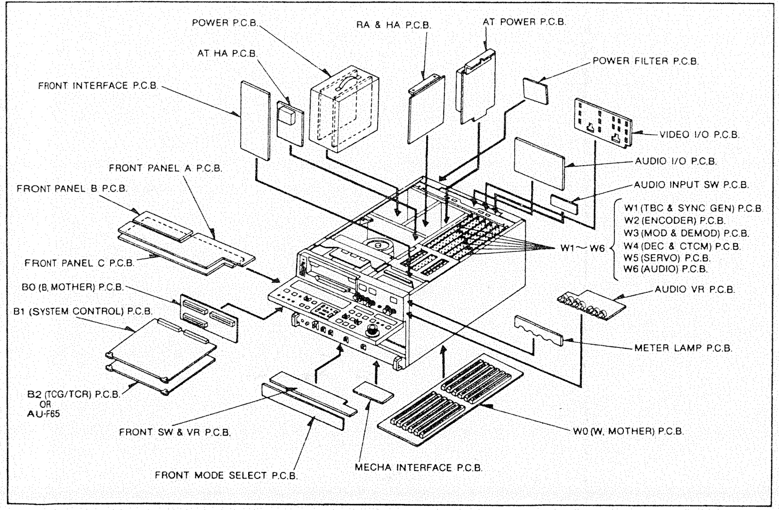
POWER P.C.B.
RA & HA P.C.B.
AT POWER P.C.B.
AT HA P.C.B.
POWER FILTER P.C.B.
FRONT INTERFACE P.C.B.
VIDEO I/O P.C.B.
AUDIO I/O P.C.B.
FRONT PANEL A P.C.B.
FRONT PANEL B P.C.B.
AUDIO INPUT SW P.C.B.
W1 (TBC & SYNC GEN) P.C.B.
W2 (ENCODER) P.C.B.
W3 (MOD & DEMOD) P.C.B.
W4 (DEC & CTCM) P.C.B.
W5 (SERVO) P.C.B.
W6 (AUDIO) P.C.B.
W1～W6
FRONT PANEL C P.C.B.
B0 (B, MOTHER) P.C.B.
AUDIO VR P.C.B.
B1 (SYSTEM CONTROL) P.C.B.
METER LAMP P.C.B.
B2 (TCG/TCR) P.C.B.
OR
AU-F65
FRONT SW & VR P.C.B.
W0 (W, MOTHER) P.C.B.
FRONT MODE SELECT P.C.B.
MECHA INTERFACE P.C.B.

CHIP PART INFORMATION

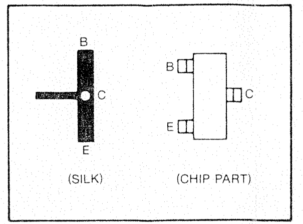
B
C
E
B
C
E
(SILK)
(CHIP PART)

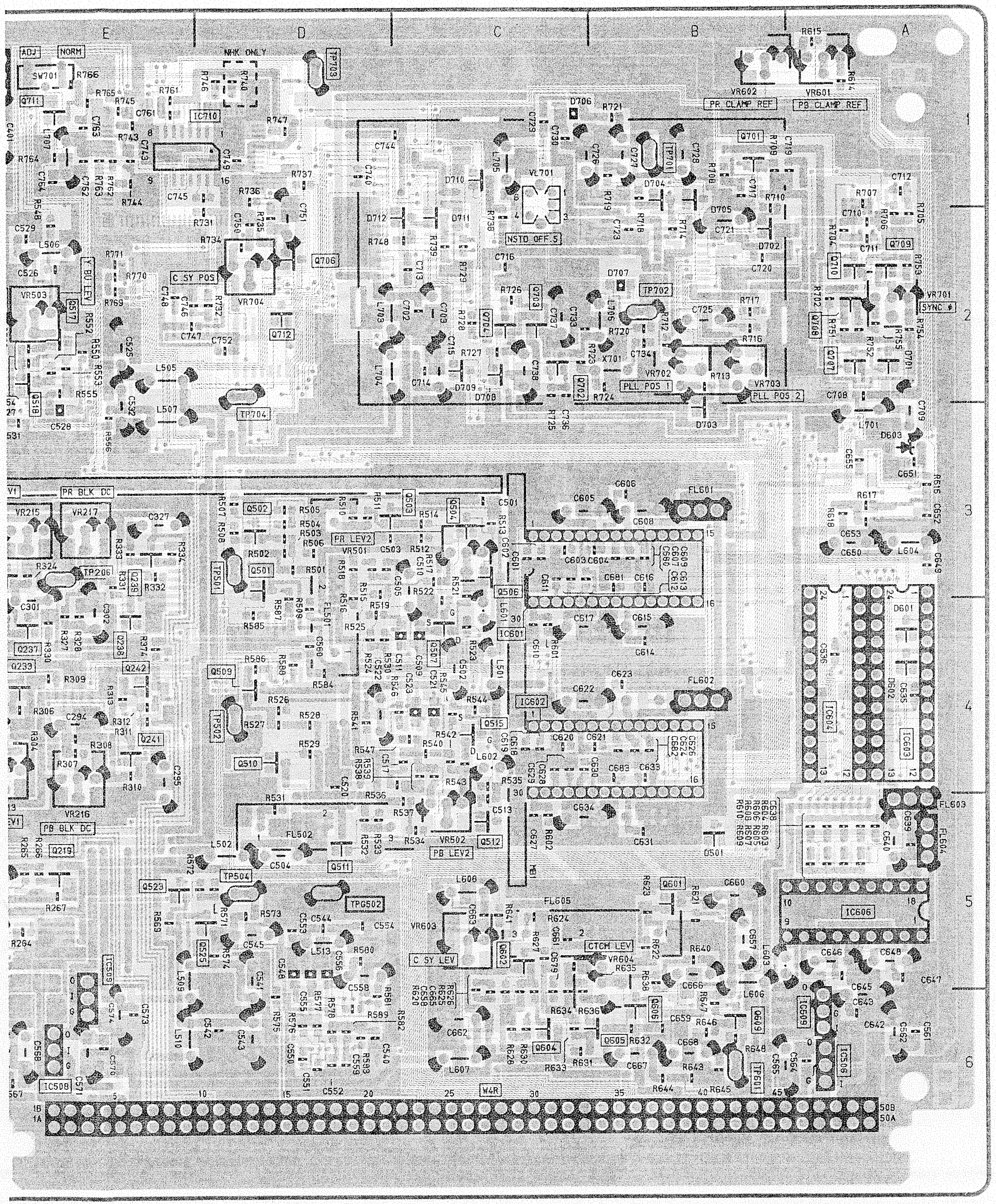
E
D
C
B
A
NHK ONLY
VR602
PR CLAMP REF
VR601
PB CLAMP REF
C SY POS
NSTD OFF S
PLL POS 1
PLL POS 2
PR BLK DC
PR LEV2
PB BLK DC
PB LEV2
C SY LEV
CTCM LEV
W4R

(FOIL SIDE)

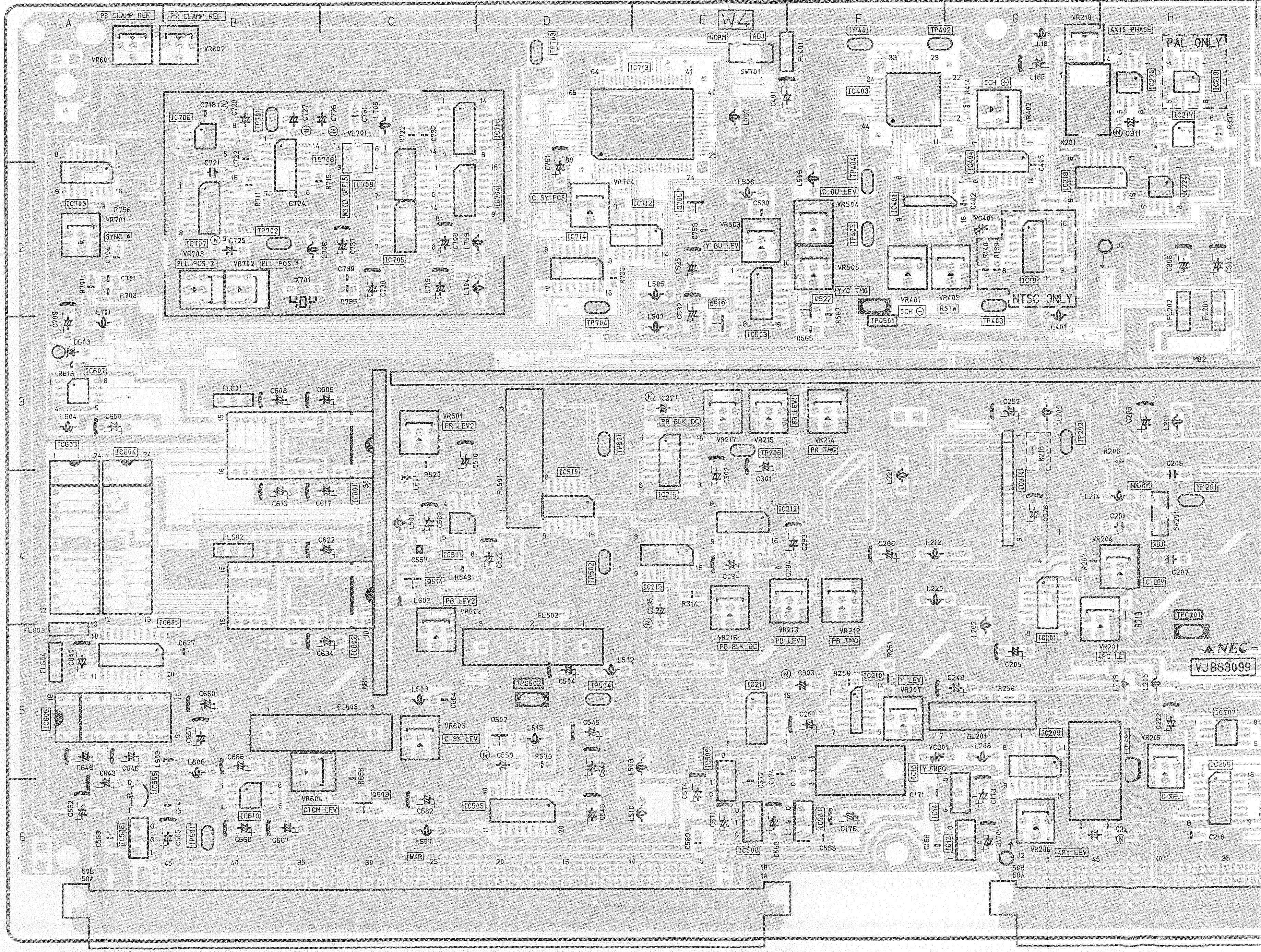
A
B
C
D
E
F
G
H
W4
PB CLAMP REF
PR CLAMP REF
PAL ONLY
AXIS PHASE
NTSC ONLY
SYNC
PLL POS 2
PLL POS 1
C SY POS
Y BU LEV
C BU LEV
Y/C TMG
PR LEV2
PR BLK DC
PB BLK DC
PB LEV1
PB TMG
PR TMG
PB LEV2
C SY LEV
CTCM LEV
Y LEV
Y FREQ
ZPY LEV
NORM
ADJ
4PC LEV
NEC
VJB83099
W4R

CHIP PART INFORMATION

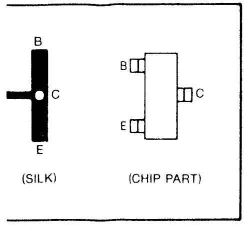
B
C
E
(SILK)
B
C
E
(CHIP PART)

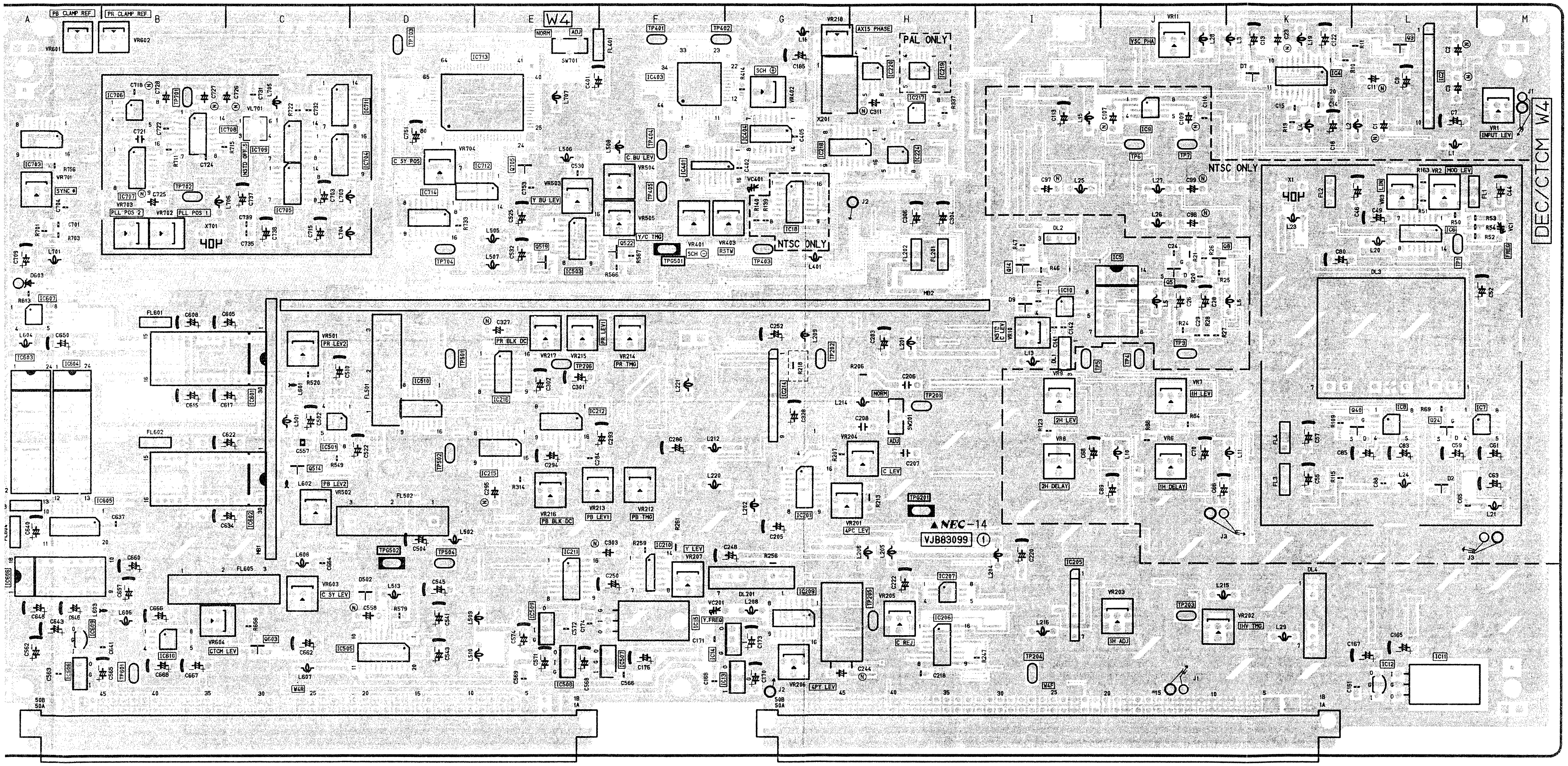
A
B
C
D
E
W4
F
G
H
I
J
K
L
M
PB CLAMP REF
PR CLAMP REF
VR601
VR602
NORM
ADJ
SW701
AXIS PHASE
PAL ONLY
NTSC ONLY
NTSC ONLY
DEC/CTCM W4
VSC PHA
INPUT LEV
MOD LEV
SYNC
PLL POS 2
PLL POS 1
40H
C SY POS
Y BU LEV
C BU LEV
Y/C TMG
SCH
RSTW
PR LEV2
PR BLK DC
PR LEV1
PR TMG
PB LEV2
PB BLK DC
PB LEV1
PB TMG
C SY LEV
CTCM LEV
Y LEV
Y FREQ
4PY LEV
C REJ
C LEV
4PC LEV
2H LEV
1H LEV
2H DELAY
1H DELAY
1H ADJ
IHV TMG
NEC-14
VJB83099
DL3
DL4
FL501
FL502
FL601
FL602
FL605
J1
J2
J3
50B
50A
1B
1A
45
40
35
30
25
20
15
10
5

(COMPONENT SIDE)

W4 (DEC & CTCM)

COMPONENT SIDE

Transistors	
Q3	L-1
Q5	J-3
Q8	J-3
Q14	I-3
Q24	L-4
Q40	L-4
Q514	C-4
Q519	E-3
Q522	F-2
Q603	C-6
Q705	E-2

Integrated Circuits	
IC2	L-1
IC4	K-1
IC5	J-3
IC6	L-2
IC7	M-4
IC8	L-4
IC9	J-1
IC10	I-3
IC11	L-6
IC12	L-6
IC13	G-6
IC14	G-6
IC15	F-5
IC18	G-2
IC201	G-4
IC205	I-5
IC206	H-6
IC207	H-5
IC209	G-5
IC210	F-5
IC211	E-5
IC212	E-4
IC214	G-4
IC215	E-4
IC216	E-3
IC217	H-1
IC218	G-2
IC219	H-1
IC220	H-1
IC224	H-2
IC401	F-2
IC403	F-1
IC404	G-2
IC501	C-4
IC503	E-2
IC505	D-6
IC506	A-6
IC507	F-6
IC508	E-6
IC509	E-6
IC510	D-4
IC601	B-3
IC602	B-4
IC603	A-4
IC604	A-4
IC605	A-5
IC606	A-5
IC607	A-3
IC609	A-6
IC610	B-6
IC703	A-2
IC704	C-2
IC705	C-2
IC706	B-1
IC707	B-2
IC708	B-2
IC709	C-2
IC711	C-1
IC712	E-2
IC713	E-1
IC714	D-2

Test Points	
TP1	L-2
TP3	J-3
TP4	J-3
TP5	I-3
TP6	J-2
TP7	J-2
TP201	H-4
TP202	G-3
TP203	J-5
TP204	I-6
TP205	H-5
TP206	E-3
TP401	F-1
TP402	F-1
TP403	G-2
TP404	F-2
TP405	F-2
TP501	D-3
TP502	D-4
TP504	D-5
TP601	B-6
TP701	B-1
TP702	B-2
TP703	D-1
TP704	D-2

TP GND	
TPG201	H-5
TPG501	F-2
TPG502	D-5

Adjustments	
VR1	M-1
VR2	L-2
VR3	L-2
VR6	J-4
VR7	J-4
VR8	I-4
VR9	I-4
VR10	I-3
VR11	J-1
VR201	G-5
VR202	J-6
VR203	J-5
VR204	H-4
VR205	H-5
VR206	G-6
VR207	F-5
VR212	F-4
VR213	E-4
VR214	F-3
VR215	E-3
VR216	E-4
VR217	E-3
VR218	G-1
VR401	F-2
VR402	G-1
VR403	G-2
VR501	C-3
VR502	C-5
VR503	E-2
VR504	F-2
VR505	F-2
VR601	A-1
VR602	B-1
VR603	C-5
VR604	B-5
VR701	A-2
VR702	B-2
VR703	B-2
VR704	D-2

Others	
VC1	M-2
VC201	F-5
VC401	G-2

FOIL SIDE

Transistors	
Q1	M-1
Q2	L-1
Q4	J-3
Q6	J-3
Q7	J-3
Q9	J-3
Q10	J-3
Q11	J-2
Q12	I-3
Q13	I-2
Q15	I-3
Q17	I-3
Q18	L-2
Q19	L-3
Q20	L-3
Q21	L-3
Q22	L-3
Q23	L-3
Q25	L-4
Q26	L-4
Q27	J-4
Q28	J-4
Q29	J-4
Q30	J-4
Q31	J-4
Q32	J-4
Q33	J-4
Q34	K-2
Q35	K-3
Q36	K-3
Q37	K-3
Q38	K-3
Q39	K-3
Q41	L-4
Q42	L-4
Q43	I-4
Q44	I-4
Q45	I-4
Q46	I-4
Q47	J-4
Q48	I-2
Q49	J-2
Q50	J-2
Q51	I-2
Q52	J-2
Q53	J-2
Q54	I-1
Q55	I-1
Q56	I-1
Q57	I-1
Q58	J-1
Q59	K-1
Q60	J-1
Q61	K-1
Q62	K-1
Q64	H-2
Q201	G-4
Q202	G-4
Q203	G-4
Q204	G-4
Q205	G-4
Q206	G-4
Q207	G-3
Q209	K-5
Q210	J-5
Q212	J-5
Q213	J-5
Q214	I-6
Q215	H-5
Q216	H-5
Q217	G-6
Q218	G-5
Q219	E-5
Q230	F-4
Q231	F-4
Q232	F-4
Q233	E-4
Q234	F-4
Q235	F-3
Q236	E-3
Q237	E-4
Q238	E-4
Q239	E-3
Q240	G-2
Q241	E-4
Q242	E-4
Q243	H-1
Q401	F-1
Q402	F-1
Q501	D-3
Q502	D-3
Q503	D-3
Q504	C-3
Q506	C-3
Q507	C-4
Q509	D-4
Q510	D-4
Q511	D-5
Q512	C-5
Q515	C-4
Q517	E-2
Q518	E-2
Q520	F-2
Q521	F-2
Q523	E-5
Q525	D-5
Q601	B-5
Q602	C-5
Q604	C-6
Q605	B-6
Q606	B-6
Q609	B-6
Q701	B-1
Q702	C-2
Q703	C-2
Q704	C-2
Q706	D-2
Q707	A-2
Q708	A-2
Q709	A-2
Q710	A-2
Q711	E-1
Q712	D-2

Integrated Circuits	
IC1	L-2
IC3	L-1
IC402	F-2
IC710	E-1

W5 (SERVO)

COMPONENT SIDE

Transistors	
Q1	E-1
Q3	D-1
Q4	F-1
Q9	F-5
Q15	F-5
Q18	D-6
Q103	H-4
Q107	K-4
Q108	K-4
Q109	K-4
Q110	K-4
Q111	I-4
Q114	I-4
Q116	K-4
Q120	A-5
Q122	A-5
Q123	A-5
Q124	A-5
Q125	B-6
Q126	B-6
Q127	A-6
Q136	B-6
Q305	L-1
Q306	L-1
Q312	L-5
Q313	L-5
Q314	L-4
Q316	L-4
Q317	M-4
Q320	L-3
Q323	L-3
Q336	L-4
Q337	L-5
Q338	L-3
Q345	L-4
Q346	M-1
Q347	M-2
Q501	I-6
Q502	I-6
Q503	K-5
Q504	J-6
Q505	L-5
Q507	K-5
Q602	F-4
Q603	F-4
Q604	F-4
Q605	F-4
Q702	A-4
Q703	A-4
Q704	A-4
Q705	A-4
Q706	A-4
Q707	A-4
Q708	A-4
Q709	A-3
Q710	A-3
Q711	B-3

Integrated Circuits	
IC6	I-2
IC7	H-2
IC8	G-3
IC11	E-6
IC12	I-2
IC13	H-2
IC14	H-3
IC15	H-2
IC16	H-3
IC17	D-5
IC18	E-2
IC19	D-6
IC103	H-4
IC105	E-6
IC106	K-6
IC107	J-2
IC109	J-3
IC110	K-3
IC111	J-2
IC113	J-4
IC114	J-4
IC115	J-4
IC116	K-4
IC117	K-4
IC118	I-4
IC121	K-4
IC122	B-5
IC124	K-3
IC125	C-3
IC133	K-1
IC135	L-2
IC301	E-5
IC304	M-1
IC314	L-3
IC318	K-3
IC319	L-2
IC320	L-4
IC501	G-5
IC502	H-5
IC503	I-5
IC504	I-5
IC505	K-5
IC506	J-5
IC507	G-4
IC601	E-2
IC700	C-2
IC702	C-2
IC706	A-2
IC707	B-1
IC708	C-2
IC710	E-1
IC711	B-3
IC712	B-3
IC721	E-6
IC722	F-6
IC723	A-5
IC724	E-5
IC725	C-4
IC726	B-4

Test Points	
TP1	F-5
TP2	F-4
TP3	F-1
TP4	F-3
TP5	G-2
TP6	I-1
TP7	I-1
TP8	G-4
TP9	F-2
TP10	I-1
TP11	H-1
TP12	G-1
TP13	G-1
TP14	G-2
TP15	F-1
TP16	H-1
TP17	I-2
TP18	F-2
TP19	L-6
TP20	H-2
TP101	J-2
TP102	J-1
TP103	K-2
TP104	G-2
TP105	G-2
TP106	I-3
TP107	H-3
TP108	I-4
TP109	B-5
TP110	B-5
TP111	H-3
TP112	H-4
TP113	H-4
TP114	E-3
TP115	E-3
TP116	E-5
TP117	F-4
TP118	H-4
TP201	E-5
TP202	F-5
TP203	E-4
TP204	F-3
TP302	L-2
TP303	L-6
TP304	L-5
TP306	M-5
TP309	L-5
TP310	M-2
TP311	M-5
TP312	L-3
TP700	C-2
TP701	C-1
TP702	D-2
TP703	B-3
TP704	D-3
TP705	D-4
TP706	C-3
TP707	D-4
TP708	D-3
TP709	D-2
TP710	D-1
TP711	C-4
TP712	C-4
TP713	C-5
TP714	E-4

TP GND	
TPG1	G-3
TPG2	F-4
TPG3	D-1

Adjustments	
VR1	J-3
VR3	D-4
VR101	I-4
VR102	H-4
VR103	J-4
VR104	J-4
VR105	J-4
VR301	M-2
VR302	L-6
VR303	L-6
VR304	M-5
VR305	M-5
VR306	L-5
VR308	L-3
VR309	L-1
VR600	D-4
VR700	C-3
VR701	C-1
VR702	C-1
VR703	B-1
VR704	C-1
VR705	C-1
VR706	D-1
VR707	C-1
VR708	C-5
VR709	B-5

FOIL SIDE

Transistors	
Q2	I-1
Q5	F-5
Q6	F-4
Q7	F-5
Q8	F-6
Q10	F-6
Q11	F-5
Q12	F-4
Q13	F-4
Q14	F-5
Q16	F-5
Q17	F-5
Q101	B-5
Q102	H-4
Q104	H-3
Q105	J-3
Q106	J-2
Q112	I-4
Q113	I-4
Q115	J-4
Q117	K-4
Q118	L-4
Q119	L-4
Q121	A-5
Q128	G-2
Q129	D-4
Q130	B-4
Q131	C-3
Q132	I-4
Q133	H-4
Q134	J-4
Q135	I-4
Q137	H-5
Q138	L-2
Q139	L-2
Q301	M-2
Q302	M-1
Q303	L-1
Q304	L-1
Q307	M-2
Q308	M-2
Q309	M-3
Q319	M-4
Q340	K-3
Q343	K-3
Q344	K-2
Q506	L-5
Q508	K-5
Q509	I-4
Q600	D-4
Q601	D-4
Q606	F-1
Q700	A-1
Q701	A-3

Integrated Circuits	
IC1	C-6
IC2	C-5
IC3	J-1
IC4	G-4
IC5	C-5
IC9	J-2
IC10	J-2
IC101	C-5
IC102	C-5
IC104	I-3
IC108	K-3
IC112	I-3
IC119	K-4
IC120	K-4
IC123	B-5
IC126	B-4
IC128	B-4
IC129	A-4
IC130	H-4
IC131	B-5
IC132	B-5
IC134	L-1
IC136	B-3
IC137	D-3
IC302	M-3
IC303	L-2
IC305	L-1
IC306	L-6
IC307	L-6
IC308	L-4
IC309	M-4
IC310	L-5
IC311	L-5
IC312	L-4
IC313	M-4
IC315	L-3
IC316	M-3
IC600	I-3
IC701	C-2
IC703	C-2
IC704	B-1
IC705	A-1
IC709	B-1
IC713	C-3
IC714	C-4
IC715	C-4
IC716	D-3
IC717	D-2
IC718	D-4
IC719	D-4
IC720	D-2
IC727	B-4
IC800	J-4

W5(SERVO)P.C.BOARD

MODEL / TYPE	AU-665	AU-65	AU-63	AU-62
NTSC	VEP82061B	VEP82061A	VEP82061D	VEP82061C
PAL	VEP82061G	VEP82061E	VEP82061F	VEP82061E

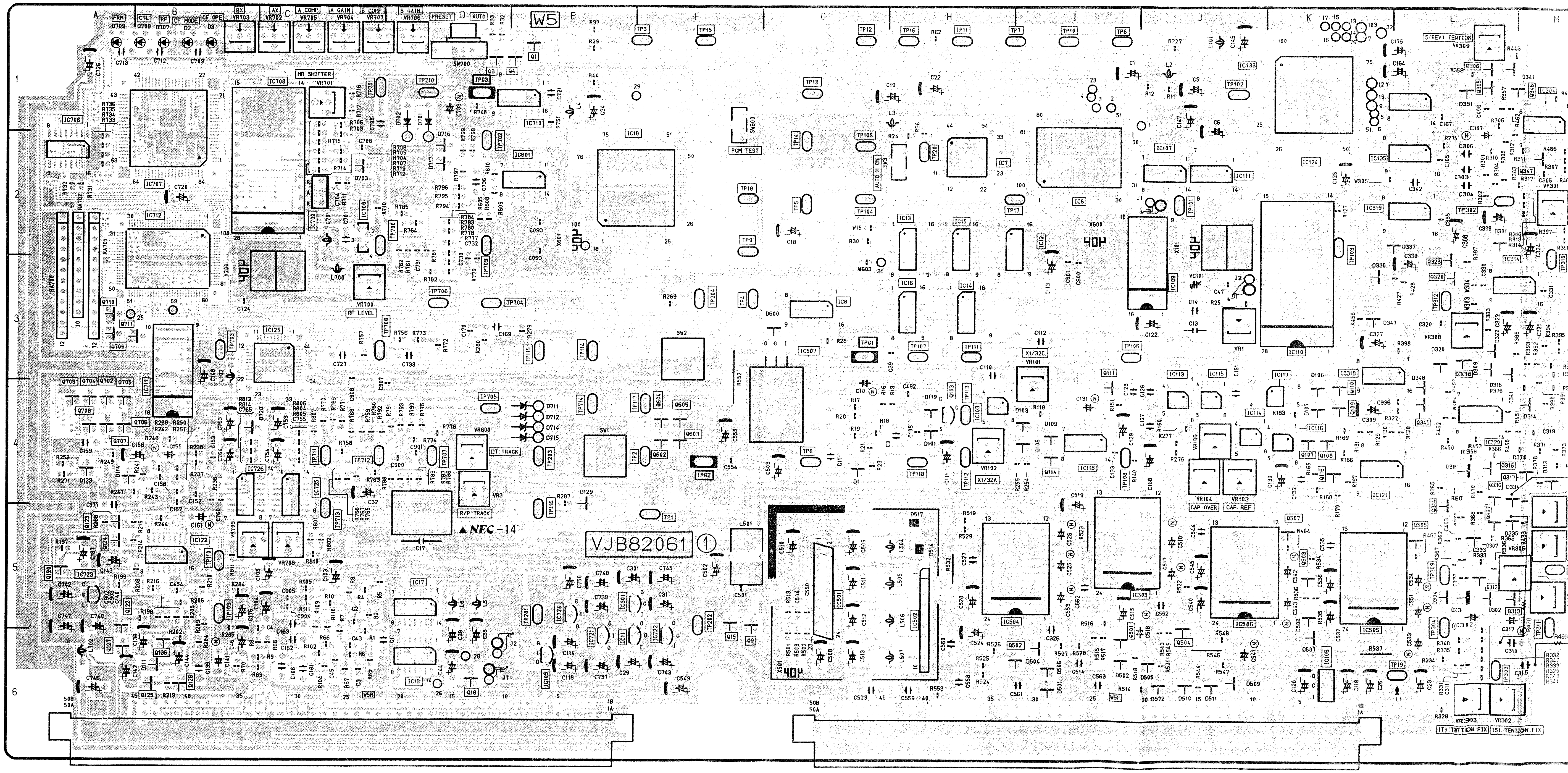

W5
VJB82061 ①
▲NEC-14
A
B
C
D
E
F
G
H
I
J
K
L
M
1
2
3
4
5
6
MR SHIFTER
RF LEVEL
DT TRACK
R/P TRACK
PCM TEST
AUTO H ON
CAP OVER
CAP REF
(REV) TENTION
(T) TENTION FIX
(S) TENTION FIX
PRESET
AUTO
SW700
VR700
VR600
VR101
VR102
VR103
VR104
VR1
IC10
IC6
IC110
IC124
X1/32C
X1/32A
X600
X101
50B
50A
1B
1A

(COMPONENT SIDE

CHIP PART INFORMATION

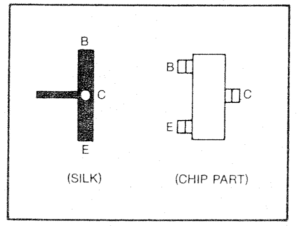
B
C
E
(SILK)
B
C
E
(CHIP PART)

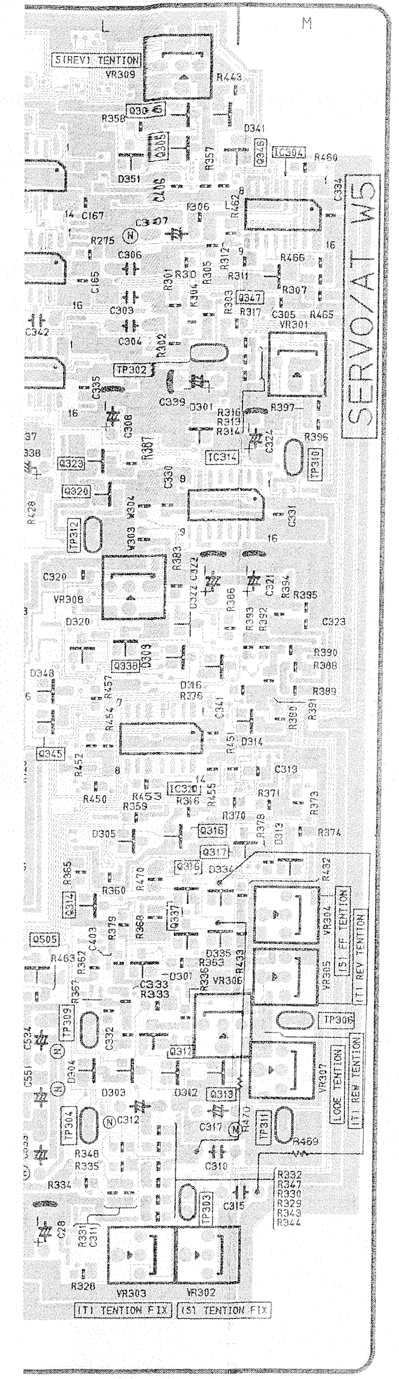
L
M
SERVO/AT W5
(R) REV1 TENTION
VR309
(S) FF TENTION
(T) REV TENTION
LODE TENTION
(T) TENTION FIX
(S) TENTION FIX
VR303
VR302

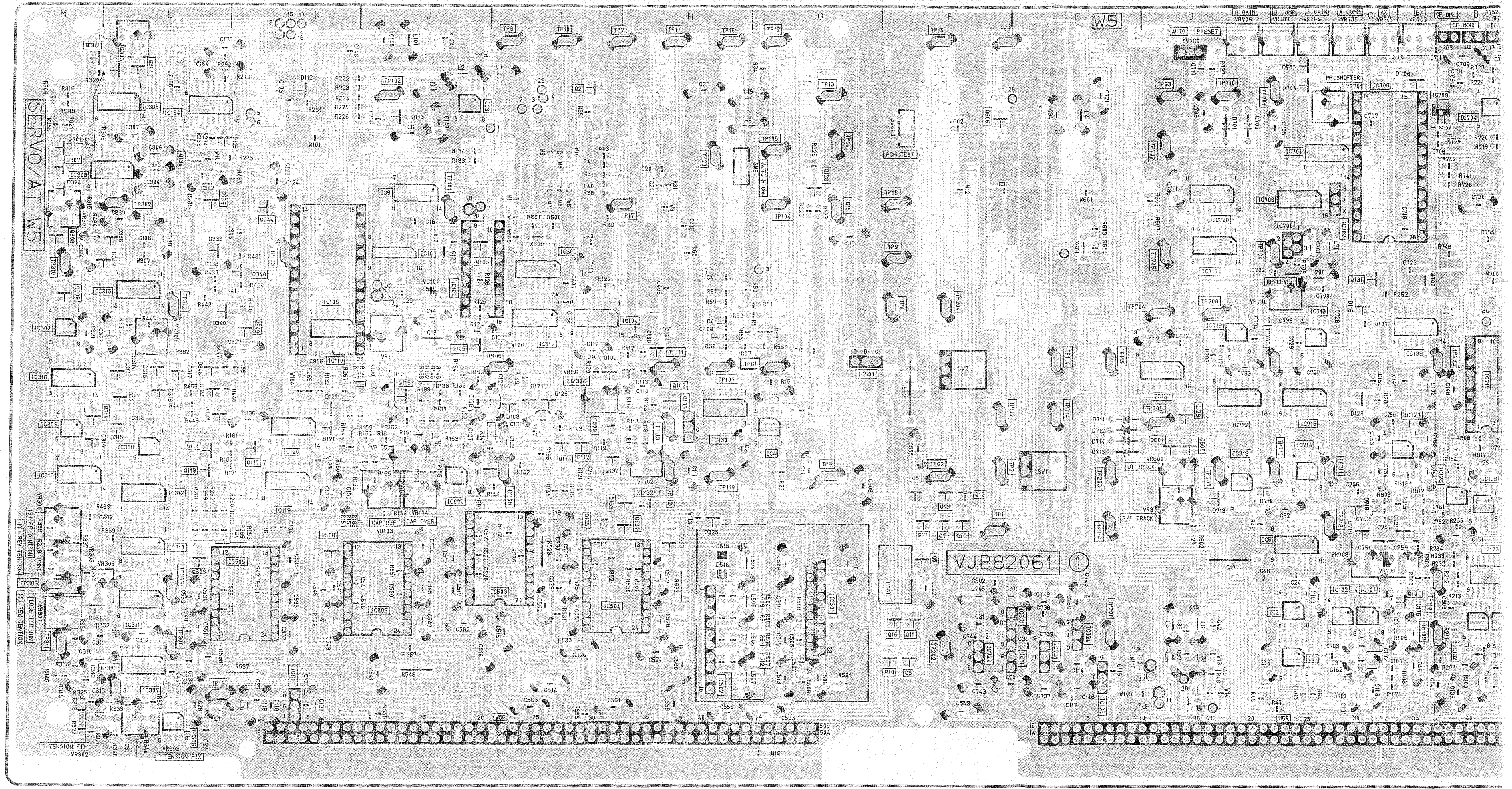
M
L
K
J
I
H
G
F
E
W5
D
C
B
SERVO/AT W5
VJB82061
①
AUTO
PRESET
SW700
B GAIN
B COMP
A GAIN
A COMP
AX
BX
CF OPE
CF MODE
MR SHIFTER
PCM TEST
AUTO H ON
DT TRACK
R/P TRACK
RF LEVEL
CAP REF
CAP OVER
X1/32A
X1/32C
(S) FF TENTION
(T) REV TENTION
LODE TENTION
S TENSION FIX
T TENSION FIX
W16

PONENT SIDE)

(

W5 SERVO P.C.B

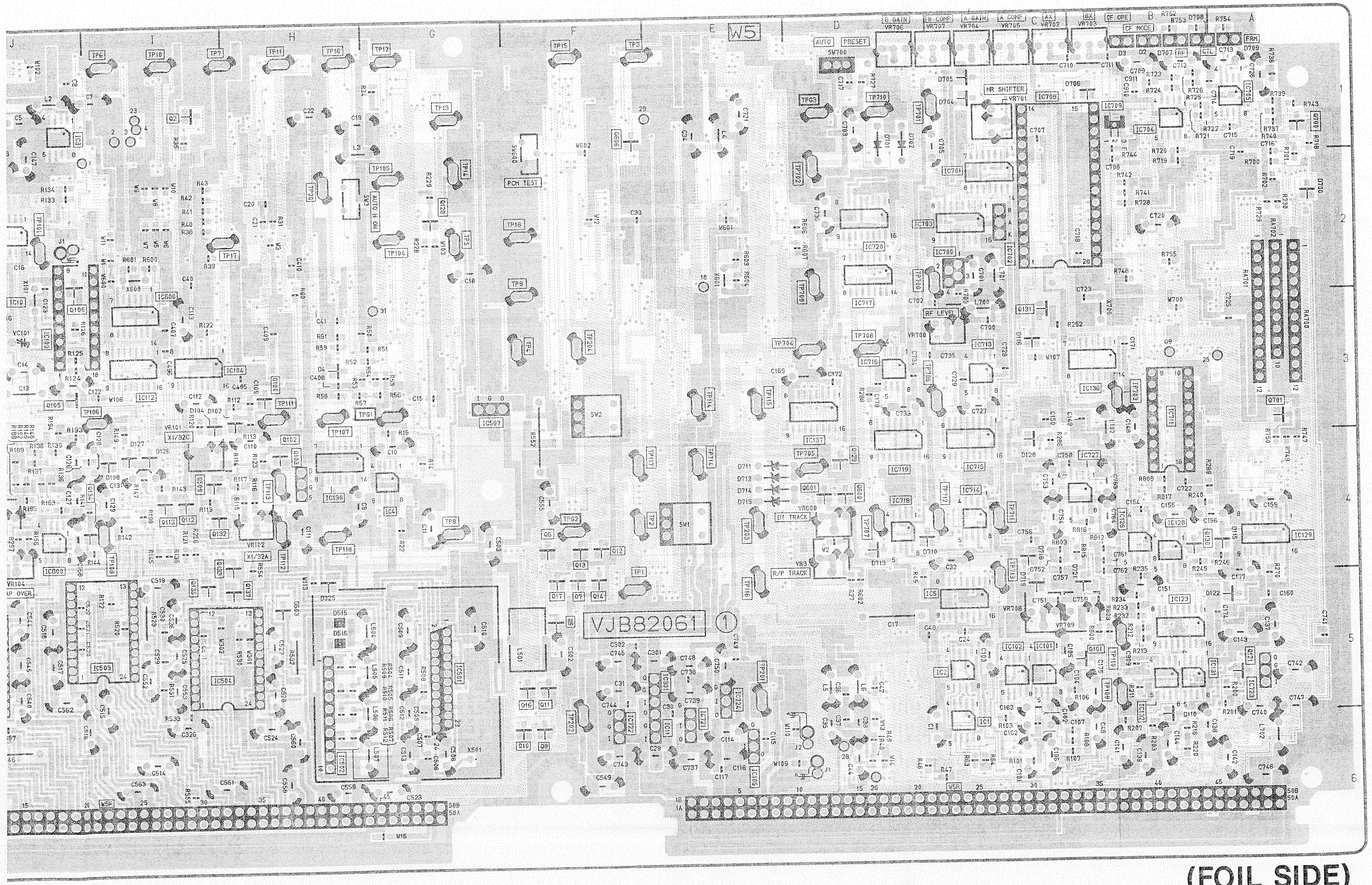
W5
J
I
H
G
F
E
D
C
B
A
1
2
3
4
5
6
AUTO
PRESET
SW700
B GAIN
VR706
B COMP
VR707
A GAIN
VR704
A COMP
VR705
AX
VR702
BX
VR703
CF OPE
CF MODE
NR SHIFTER
VR701
PCM TEST
AUTO H ON
RF LEVEL
DT TRACK
R/P TRACK
SW1
SW2
X1/32C
X1/32A
VJB82061 ①

(FOIL SIDE)

P.C. Board Location

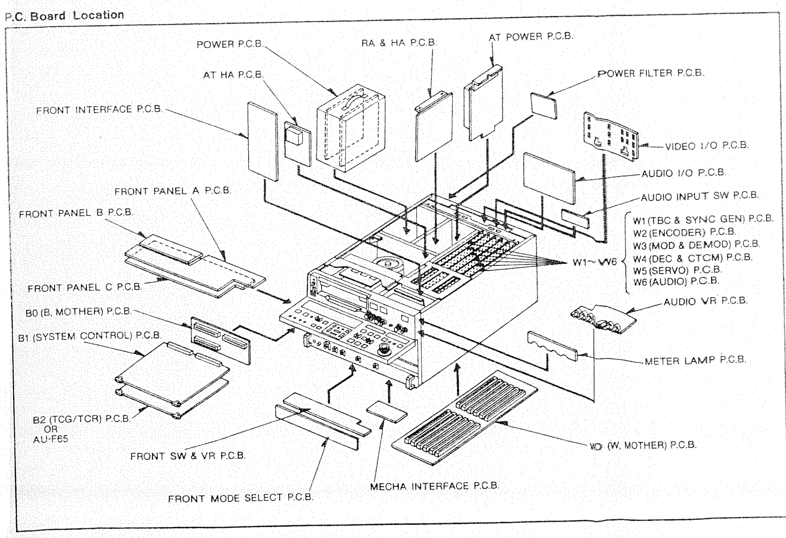
POWER P.C.B.
RA & HA P.C.B.
AT POWER P.C.B.
AT HA P.C.B.
POWER FILTER P.C.B.
FRONT INTERFACE P.C.B.
VIDEO I/O P.C.B.
AUDIO I/O P.C.B.
FRONT PANEL A P.C.B.
AUDIO INPUT SW P.C.B.
FRONT PANEL B P.C.B.
W1 (TBC & SYNC GEN) P.C.B.
W2 (ENCODER) P.C.B.
W3 (MOD & DEMOD) P.C.B.
W4 (DEC & CTCM) P.C.B.
W5 (SERVO) P.C.B.
W6 (AUDIO) P.C.B.
W1~W6
FRONT PANEL C P.C.B.
AUDIO VR P.C.B.
B0 (B, MOTHER) P.C.B.
B1 (SYSTEM CONTROL) P.C.B.
METER LAMP P.C.B.
B2 (TCG/TCR) P.C.B.
OR
AU-F65
FRONT SW & VR P.C.B.
IO (W, MOTHER) P.C.B.
MECHA INTERFACE P.C.B.
FRONT MODE SELECT P.C.B.

REVERSE SIDE

W6 AUDIO P.C.BOA

W6(AUDIO)P.C.BOARD

TYPE \ MODEL	AU-665	AU-65	AU-63	AU-62
NTSC	VEP84095B	VEP84095A	VEP84095C	VEP84095C
PAL	VEP84095F	VEP84095D	VEP84095E	VEP84095E

W6 SUB(TC TRAP)P.C.BOARD (VEP80635A)

AU-65/665
ONLY

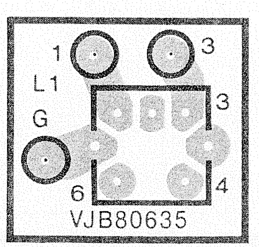
1
3
L1
3
G
6
4
VJB80635

(COMPONENT SIDE)

W6 SUB(SPOT ERASE)P.C.BOARD (VEP80664A)

AU-665 PAL
ONLY

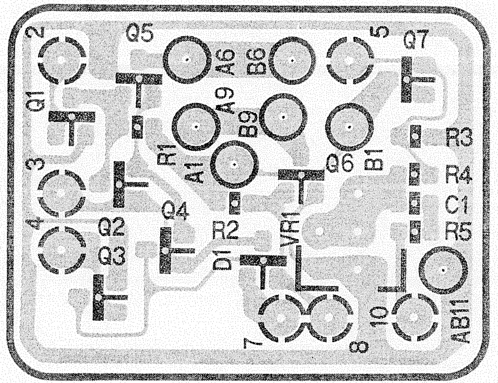
2
Q5
A6
B6
5
Q7
Q1
A9
B9
R1
A1
Q6
B1
R3
R4
C1
R5
3
4
Q2
Q3
Q4
R2
D1
VR1
7
8
10
AB11

(FOIL SIDE)

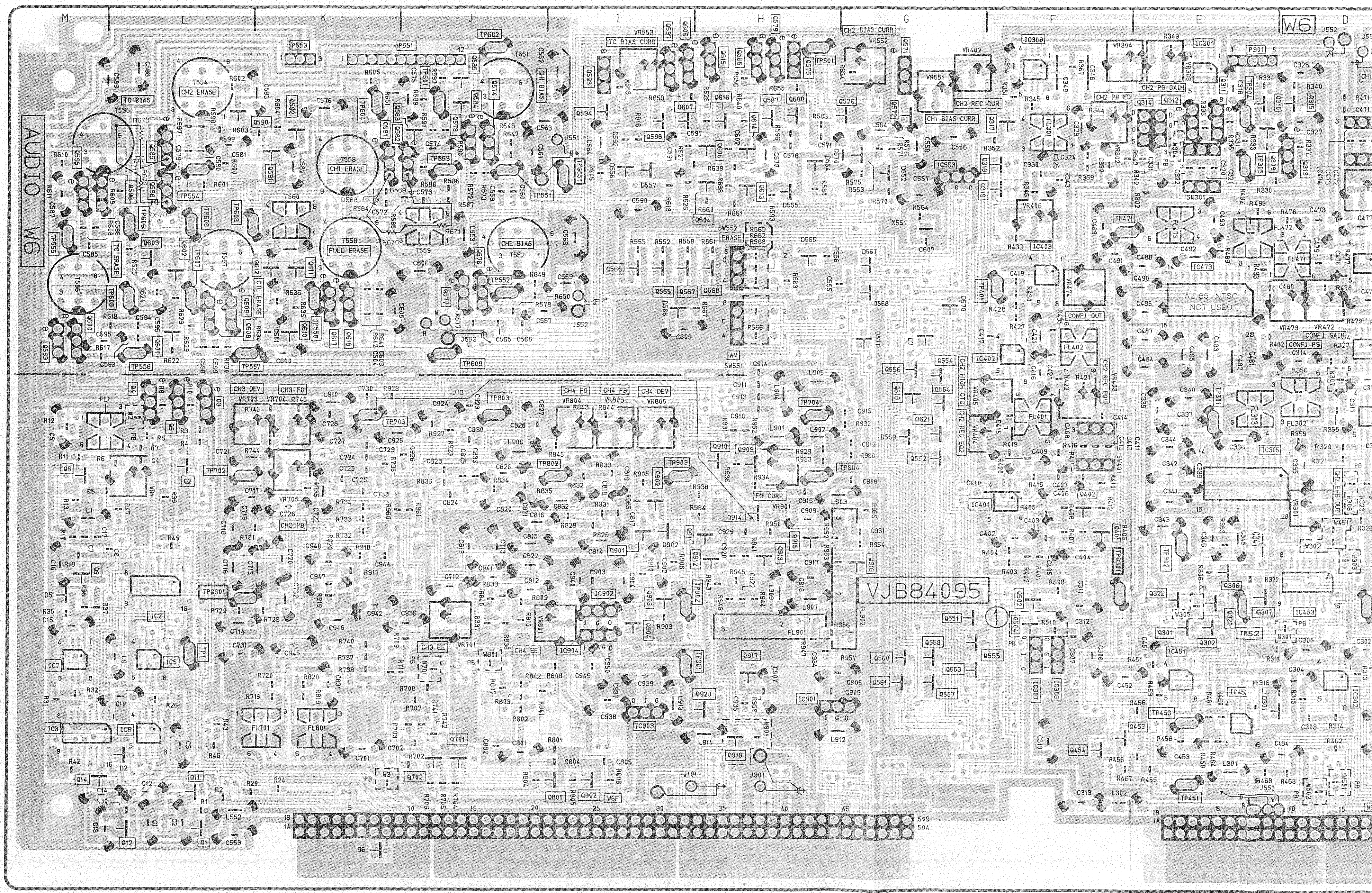
M
L
K
J
I
H
G
F
E
D
W6
AUDIO W6
VJB84095
TC BIAS
CH2 ERASE
CH1 ERASE
FULL ERASE
CH2 BIAS
TC ERASE
CH1 BIAS
TC BIAS CURR
CH2 BIAS CURR
CH1 BIAS CURR
CH2 REC CUR
CH2 PB GAIN
CH2 PB EQ
AU-65 NTSC NOT USED
CONF1 OUT
CONF1 GAIN
CH3 DEV
CH3 FO
CH4 FO
CH4 PB
CH4 DEV
CH3 EE
CH4 EE
CH3 PB
FM CURR

P.C. Board Location

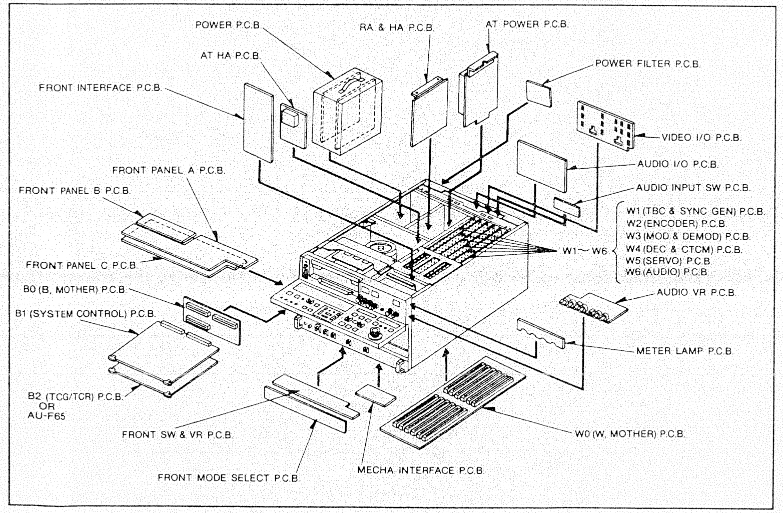
POWER P.C.B.
RA & HA P.C.B.
AT POWER P.C.B.
AT HA P.C.B.
POWER FILTER P.C.B.
FRONT INTERFACE P.C.B.
VIDEO I/O P.C.B.
AUDIO I/O P.C.B.
FRONT PANEL A P.C.B.
FRONT PANEL B P.C.B.
AUDIO INPUT SW P.C.B.
W1 (TBC & SYNC GEN) P.C.B.
W2 (ENCODER) P.C.B.
W3 (MOD & DEMOD) P.C.B.
W4 (DEC & CTCM) P.C.B.
W5 (SERVO) P.C.B.
W6 (AUDIO) P.C.B.
W1~W6
FRONT PANEL C P.C.B.
B0 (B, MOTHER) P.C.B.
AUDIO VR P.C.B.
B1 (SYSTEM CONTROL) P.C.B.
METER LAMP P.C.B.
B2 (TCG/TCR) P.C.B.
OR
AU-F65
FRONT SW & VR P.C.B.
W0 (W, MOTHER) P.C.B.
FRONT MODE SELECT P.C.B.
MECHA INTERFACE P.C.B.

CHIP PART INFORMATION

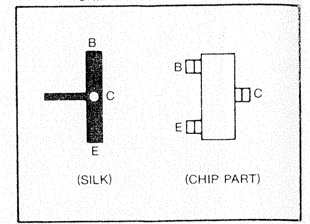
B
C
E
(SILK)
B
C
E
(CHIP PART)

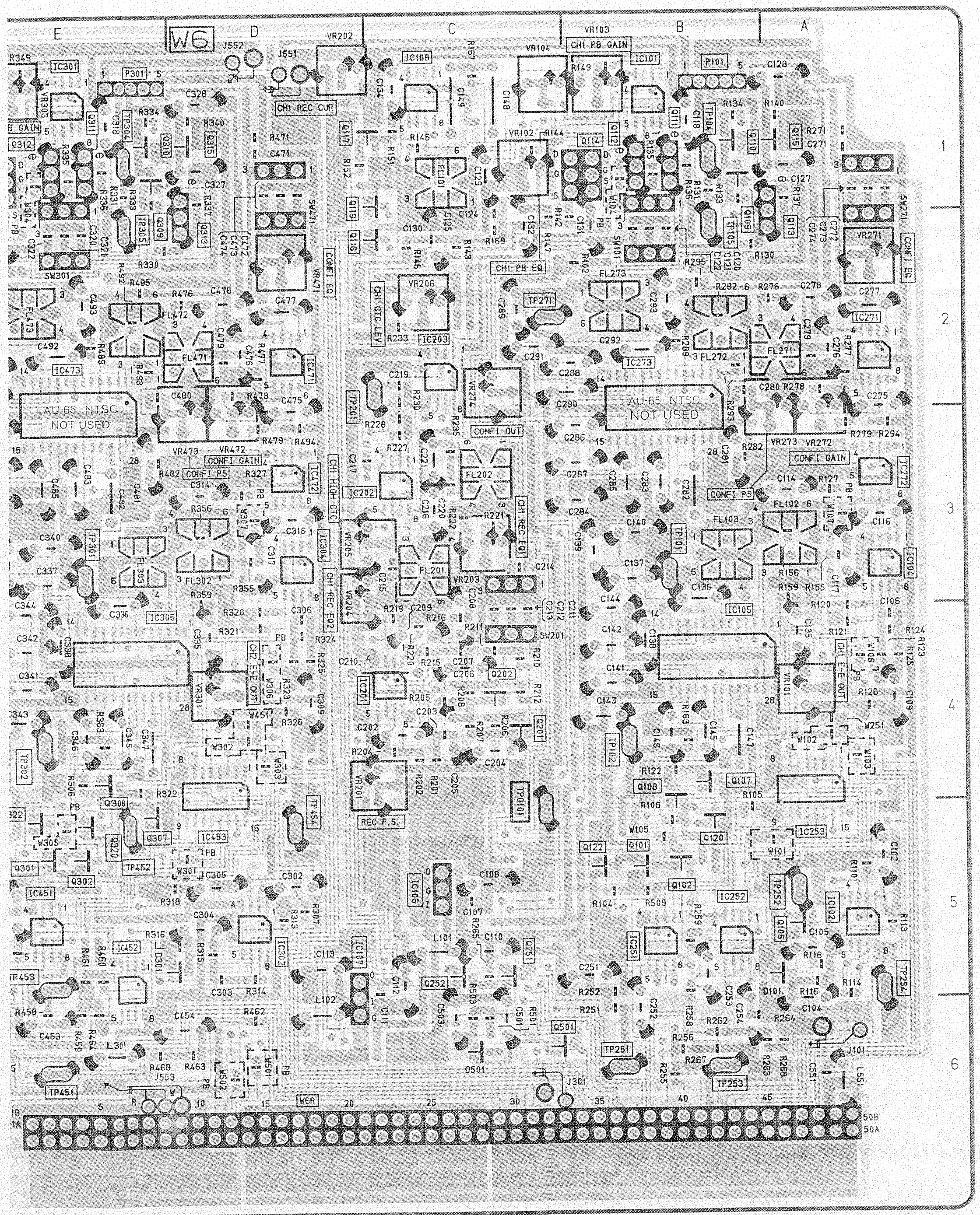
W6
E
D
C
B
A
1
2
3
4
5
6
AU-65 NTSC NOT USED
AU-65 NTSC NOT USED
CH1 REC CUR
CH1 PB GAIN
CH1 PB EQ
CONF1 GAIN
CONF1 OUT
CONF1 PS
REC P.S.
50B
50A

(FOIL SIDE)

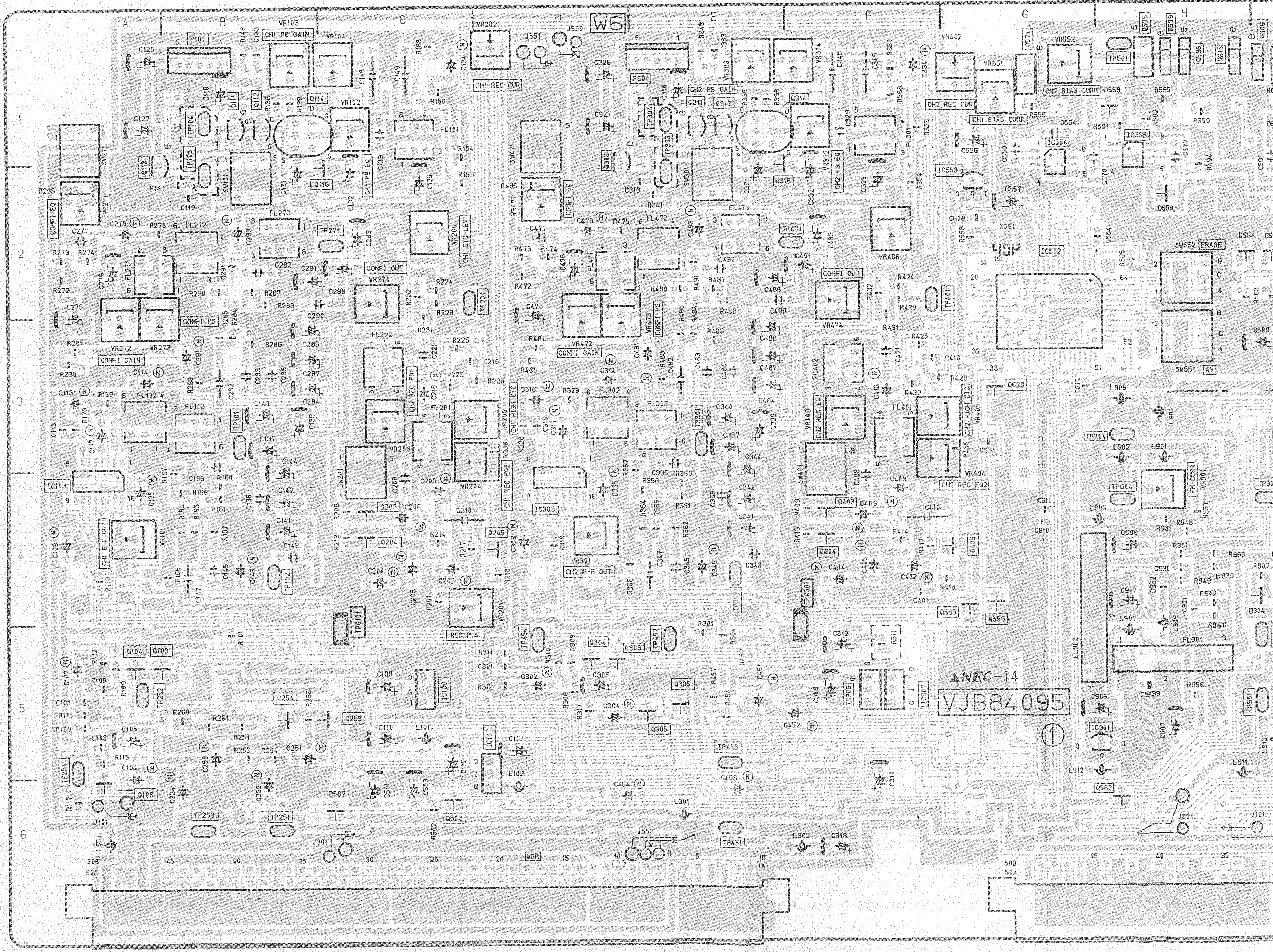
W6
A
B
C
D
E
F
G
H
1
2
3
4
5
6
CH1 PB GAIN
CH1 REC CUR
CH2 PB GAIN
CH2 REC CUR
CH1 BIAS CURR
CH2 BIAS CURR
CONF1 GAIN
CONF1 OUT
CONF1 PS
CH1 E-E OUT
CH2 E-E OUT
REC P.S.
ERASE
NEC-14
VJB84095
①
50B
50A

CHIP PART INFORMATION

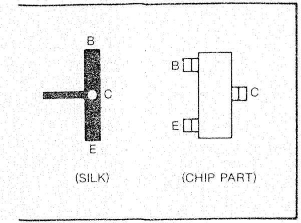
B
C
E
B
C
E
(SILK)
(CHIP PART)

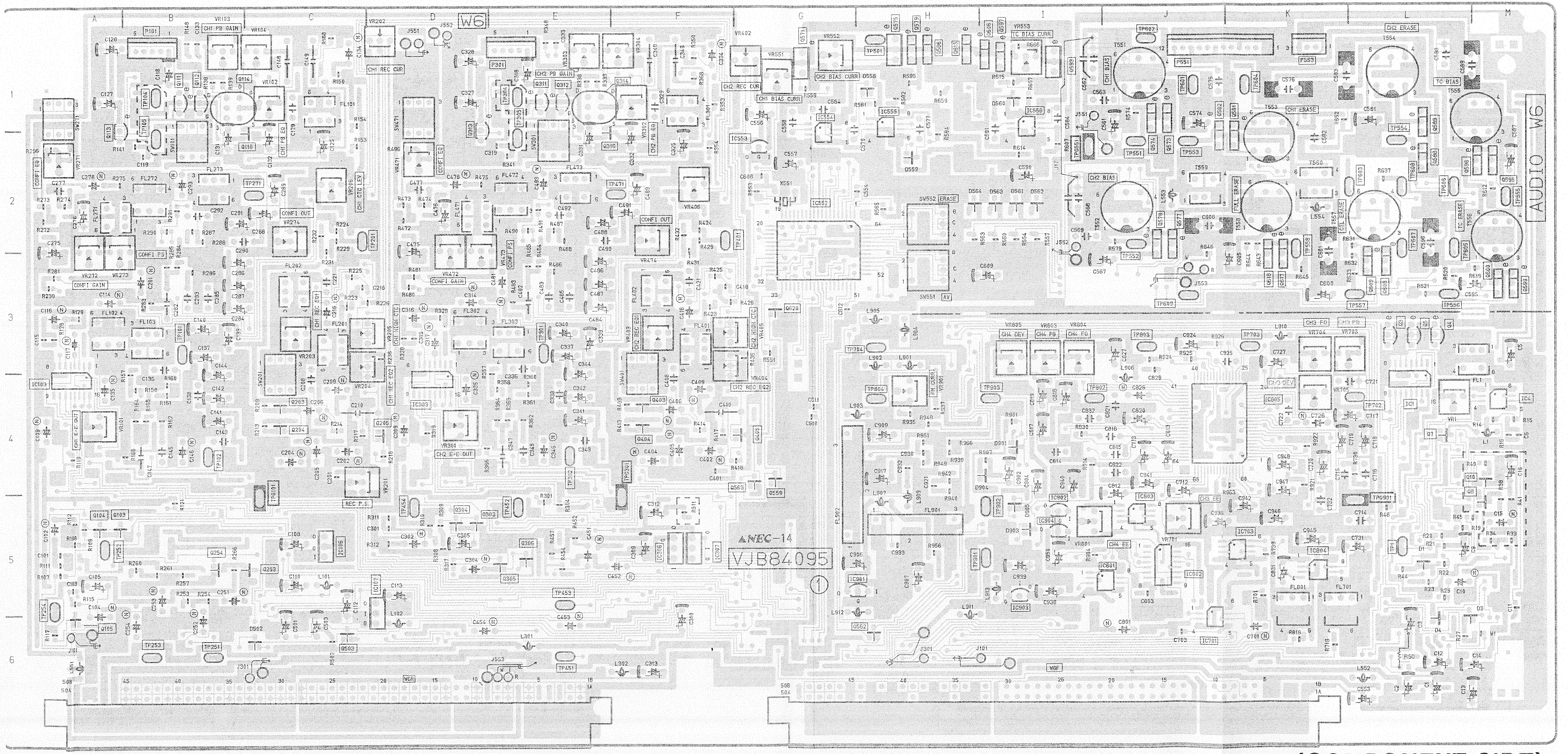
A
B
C
D
E
F
G
H
I
J
K
L
M
1
2
3
4
5
6
W6
AUDIO W6
NEC-14
VJB84095
①
CH1 PB GAIN
CH2 PB GAIN
CH1 REC CUR
CH2 REC CUR
CH1 BIAS CURR
CH2 BIAS CURR
TC BIAS CURR
CH1 BIAS
CH2 BIAS
CH1 ERASE
CH2 ERASE
FULL ERASE
CTL ERASE
TC ERASE
TC BIAS
CONFI OUT
CONFI PS
CONFI GAIN
CONFI EQ
CH1 E-E OUT
CH2 E-E OUT
CH1 REC EQ1
CH1 REC EQ2
CH2 REC EQ1
CH2 REC EQ2
CH1 HIGH CTC
CH2 HIGH CTC
CH1 CTC LEV
REC P.S.
CH1 PB EQ
CH2 PB EQ
CH4 DEV
CH4 PB
CH4 FG
CH4 EE
CH3 FO
CH3 PB
CH3 DEV
CH3 EE
FM CURR
ERASE
AV

(COMPONENT SIDE)

W6 (AUDIO)

COMPONENT SIDE

Transistors	
Q3	L-3
Q4	L-3
Q5	L-3
Q7	L-4
Q8	M-5
Q10	M-4
Q13	A-5
Q103	A-5
Q104	A-5
Q105	A-6
Q111	B-1
Q112	B-1
Q113	A-2
Q114	B-1
Q116	C-2
Q203	C-4
Q204	C-4
Q205	D-4
Q253	C-5
Q254	B-5
Q303	D-5
Q304	D-5
Q305	E-5
Q306	E-5
Q311	E-1
Q312	E-1
Q313	D-1
Q314	E-1
Q316	E-2
Q403	F-4
Q404	F-4
Q405	G-4
Q503	C-6
Q559	G-4
Q562	H-6
Q563	G-4
Q571	G-1
Q573	J-1
Q574	J-1
Q575	H-1
Q577	J-2
Q578	J-2
Q579	H-1
Q581	K-2
Q582	J-2
Q586	H-1
Q588	L-2
Q589	L-1
Q593	I-1
Q595	M-2
Q596	M-2
Q597	I-1
Q599	M-3
Q600	M-3
Q606	I-1
Q608	L-3
Q609	L-3
Q615	H-1
Q617	K-3
Q618	K-3
Q620	G-3

Integrated Circuits	
IC1	L-4
IC4	M-4
IC103	A-4
IC106	C-5
IC107	D-5
IC303	D-4
IC306	F-5
IC307	F-5
IC552	G-2
IC553	G-2
IC554	G-2
IC555	H-1
IC556	I-1
IC701	J-6
IC703	K-5
IC801	J-5
IC802	J-5
IC803	J-5
IC804	K-5
IC805	K-4
IC901	H-5
IC902	I-5
IC903	I-5
IC904	I-5

Test Pints	
TP1	L-5
TP101	B-3
TP102	B-4
TP104	B-1
TP105	B-2
TP201	C-2
TP251	B-6
TP252	A-5
TP253	B-6
TP254	A-5
TP271	C-2
TP301	E-3
TP302	E-4
TP304	E-1
TP305	E-2
TP401	F-2
TP451	E-6
TP452	E-5
TP453	E-5
TP454	D-5
TP471	F-2
TP501	H-1
TP551	J-2
TP552	J-2
TP553	J-2
TP554	L-2
TP555	M-2
TP556	L-3
TP557	L-3
TP558	K-2
TP601	J-1
TP602	J-1
TP603	L-2
TP604	K-1
TP605	L-3
TP606	L-2
TP607	L-2
TP608	L-2
TP609	J-3
TP702	L-4
TP703	K-3
TP704	H-3
TP802	I-4
TP803	J-3
TP804	H-4
TP901	I-5
TP902	I-5
TP903	I-4

TP GND	
TPG101	C-5
TPG301	F-5
TPG551	I-2
TPG901	L-5

Adjustments	
VR1	L-4
VR101	A-4
VR102	C-1
VR103	B-1
VR104	C-1
VR201	C-4
VR202	D-1
VR203	C-3
VR204	C-3
VR205	C-3
VR206	C-2
VR271	A-2
VR272	A-3
VR273	A-3
VR274	C-2
VR301	D-4
VR302	F-1
VR303	E-1
VR304	F-1
VR402	G-1
VR403	F-3
VR404	F-3
VR405	G-3
VR406	F-2
VR471	D-2
VR472	D-3
VR473	D-3
VR474	F-2
VR551	G-1
VR552	G-1
VR553	I-1
VR701	J-5
VR703	K-3
VR704	K-3
VR705	K-4
VR801	I-5
VR803	I-3
VR804	I-3
VR805	I-3
VR901	H-4

Others	
P101	B-1
P301	E-1
P551	J-1
P553	K-1

FOIL SIDE

Transistors	
Q1	L-6
Q2	L-4
Q6	M-4
Q9	M-4
Q11	L-6
Q12	L-6
Q101	B-5
Q102	B-5
Q106	A-5
Q107	B-4
Q108	B-4
Q109	B-1
Q110	B-1
Q115	A-1
Q117	C-1
Q118	C-2
Q119	C-1
Q120	B-5
Q122	B-5
Q201	C-4
Q202	C-4
Q251	C-5
Q252	C-5
Q301	E-5
Q302	E-5
Q307	E-5
Q308	E-4
Q309	E-1
Q310	E-1
Q315	D-1
Q317	F-1
Q318	F-2
Q319	F-2
Q320	E-5
Q322	E-5
Q401	F-4
Q402	F-4
Q453	F-6
Q454	F-6
Q501	C-6
Q502	F-5
Q504	F-5
Q551	G-5
Q552	G-4
Q553	G-5
Q554	G-3
Q555	G-5
Q556	G-3
Q557	G-5
Q558	G-5
Q560	G-5
Q561	G-5
Q564	G-3
Q565	I-2
Q566	I-2
Q567	I-2
Q568	H-2
Q572	G-1
Q576	G-1
Q580	H-1
Q583	J-1
Q584	J-1
Q585	J-1
Q587	H-1
Q590	L-1
Q591	K-1
Q592	K-1
Q594	I-1
Q598	I-1
Q601	L-3
Q602	L-2
Q603	L-2
Q604	H-2
Q605	H-1
Q607	I-1
Q610	K-3
Q611	K-2
Q612	K-2
Q613	H-2
Q614	H-1
Q616	H-1
Q619	G-3
Q621	G-3
Q701	J-6
Q702	J-6
Q801	I-6
Q802	I-6
Q901	I-4
Q902	I-4
Q903	I-5
Q904	I-5
Q909	H-4
Q910	H-4
Q911	H-4
Q912	H-4
Q913	H-4
Q914	H-4
Q915	H-4
Q916	G-4
Q917	H-5
Q919	H-6
Q920	H-5

Integrated Circuits	
IC2	L-4
IC3	M-6
IC5	L-5
IC6	L-6
IC7	M-5
IC14	M-6
IC101	B-1
IC102	A-5
IC104	A-3
IC105	B-4
IC108	C-1
IC201	C-4
IC202	C-3
IC203	C-2
IC251	B-5
IC252	B-5
IC253	A-4
IC271	A-2
IC272	A-3
IC273	B-2
IC301	E-1
IC302	D-5
IC304	D-3
IC305	E-4
IC308	F-1
IC401	F-4
IC402	F-3
IC403	F-2
IC451	E-5
IC452	E-5
IC453	D-4
IC471	D-2
IC472	D-3
IC473	E-2

B0(MOTHER 2)P.C.BOARD

MODEL / TYPE	AU-665	AU-65	AU-63	AU-62
NTSC	VEP80549B	VEP80549A	VEP80549B	VEP80549A
PAL	VEP80549C	VEP80549A	VEP80549B	VEP80549A

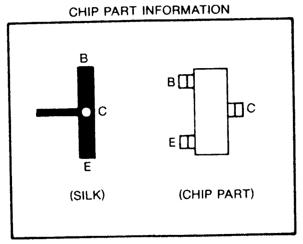
CHIP PART INFORMATION
B
C
E
(SILK)
B
C
E
(CHIP PART)

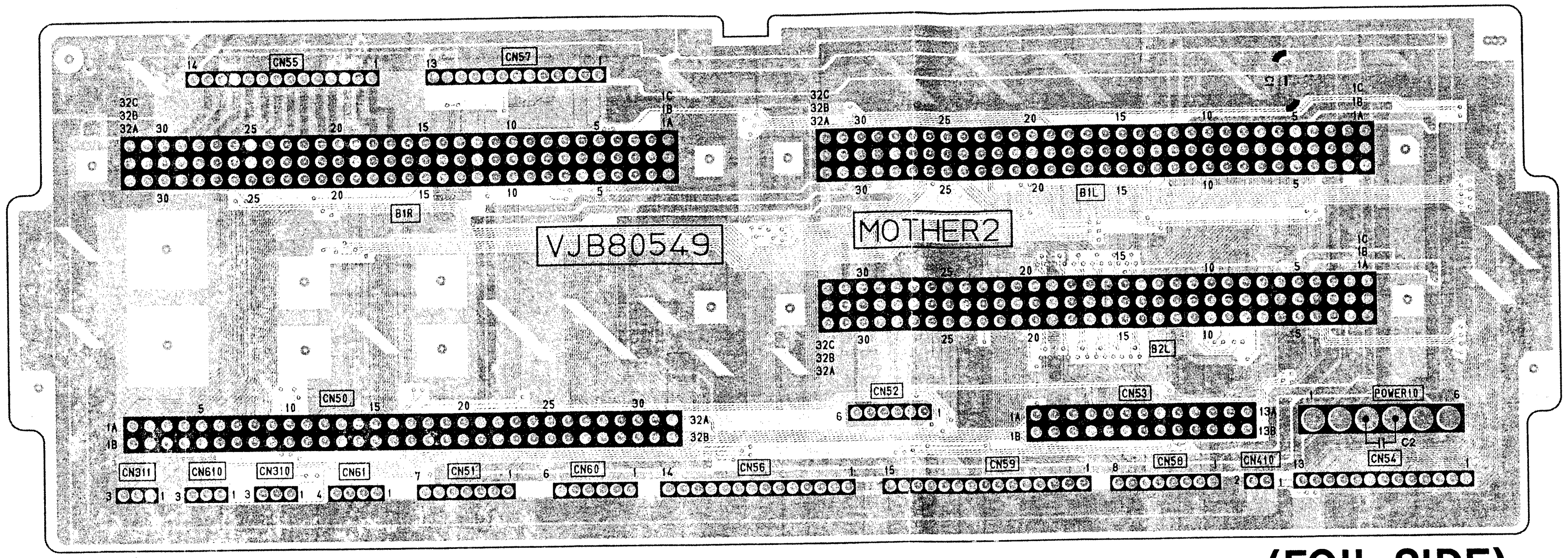
CN55
CN57
VJB80549
MOTHER2
B1R
B1L
B2L
CN50
CN52
CN53
POWER10
CN311
CN610
CN310
CN61
CN51
CN60
CN56
CN59
CN58
CN410
CN54
32C
32B
32A
1C
1B
1A

(FOIL SIDE)

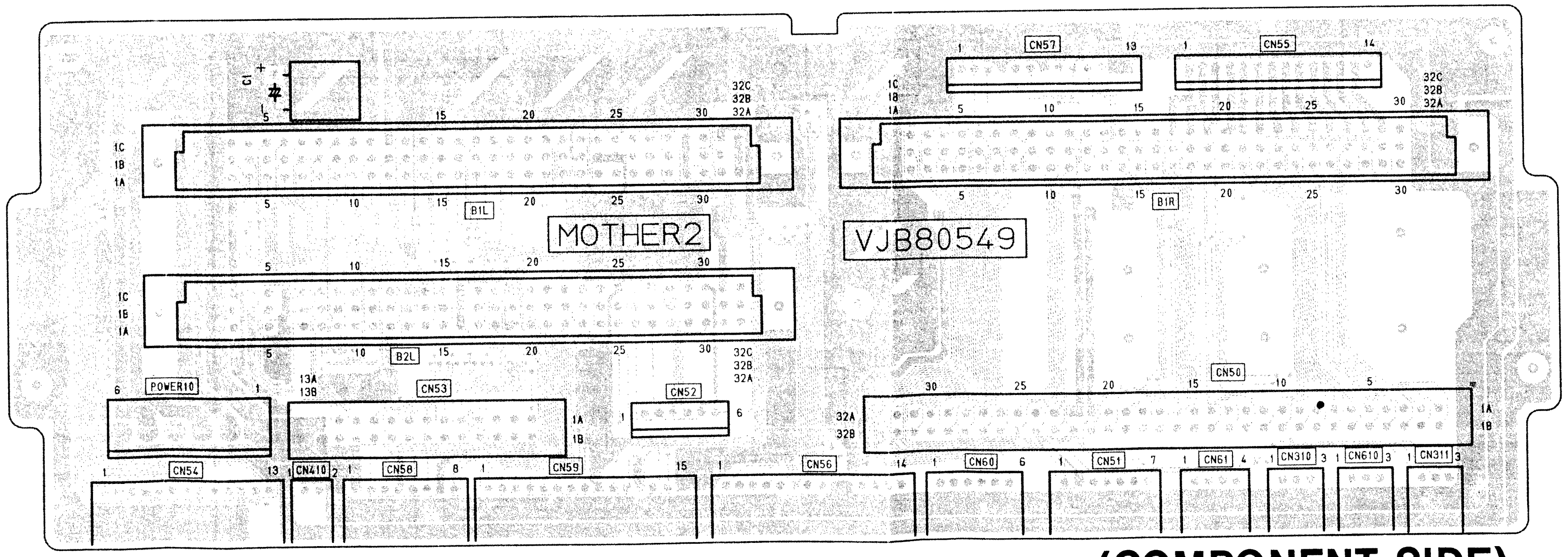
C1
CN57
CN55
MOTHER2
VJB80549
B1L
B1R
B2L
CN50
POWER10
CN53
CN52
CN54
CN410
CN58
CN59
CN56
CN60
CN51
CN61
CN310
CN610
CN311
32C
32B
32A
1C
1B
1A

(COMPONENT SIDE)

P.C. Board Location

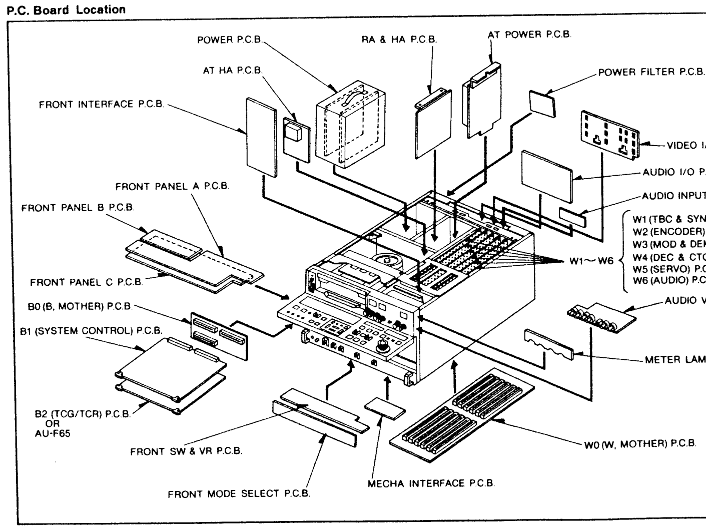
POWER P.C.B.
RA & HA P.C.B.
AT POWER P.C.B.
AT HA P.C.B.
POWER FILTER P.C.B.
FRONT INTERFACE P.C.B.
VIDEO I
AUDIO I/O P
AUDIO INPUT
FRONT PANEL A P.C.B.
FRONT PANEL B P.C.B.
W1 (TBC & SYN
W2 (ENCODER)
W3 (MOD & DE
W4 (DEC & CT
W5 (SERVO) P.C
W6 (AUDIO) P.C
W1~W6
FRONT PANEL C P.C.B.
AUDIO V
B0 (B, MOTHER) P.C.B.
B1 (SYSTEM CONTROL) P.C.B.
METER LAM
B2 (TCG/TCR) P.C.B. OR AU-F65
FRONT SW & VR P.C.B.
W0 (W, MOTHER) P.C.B.
FRONT MODE SELECT P.C.B.
MECHA INTERFACE P.C.B.

REVERSE SIDE

B1 SYSCON P

B1(SYSTEM CONTROL)P.C.BOARD

TYPE \ MODEL	AU-665	AU-65	AU-63	AU-62
NTSC	VEP86088B	VEP86088A	VEP86088D	VEP86088C
PAL	VEP86088N	VEP86088E	VEP86088F	VEP86088M

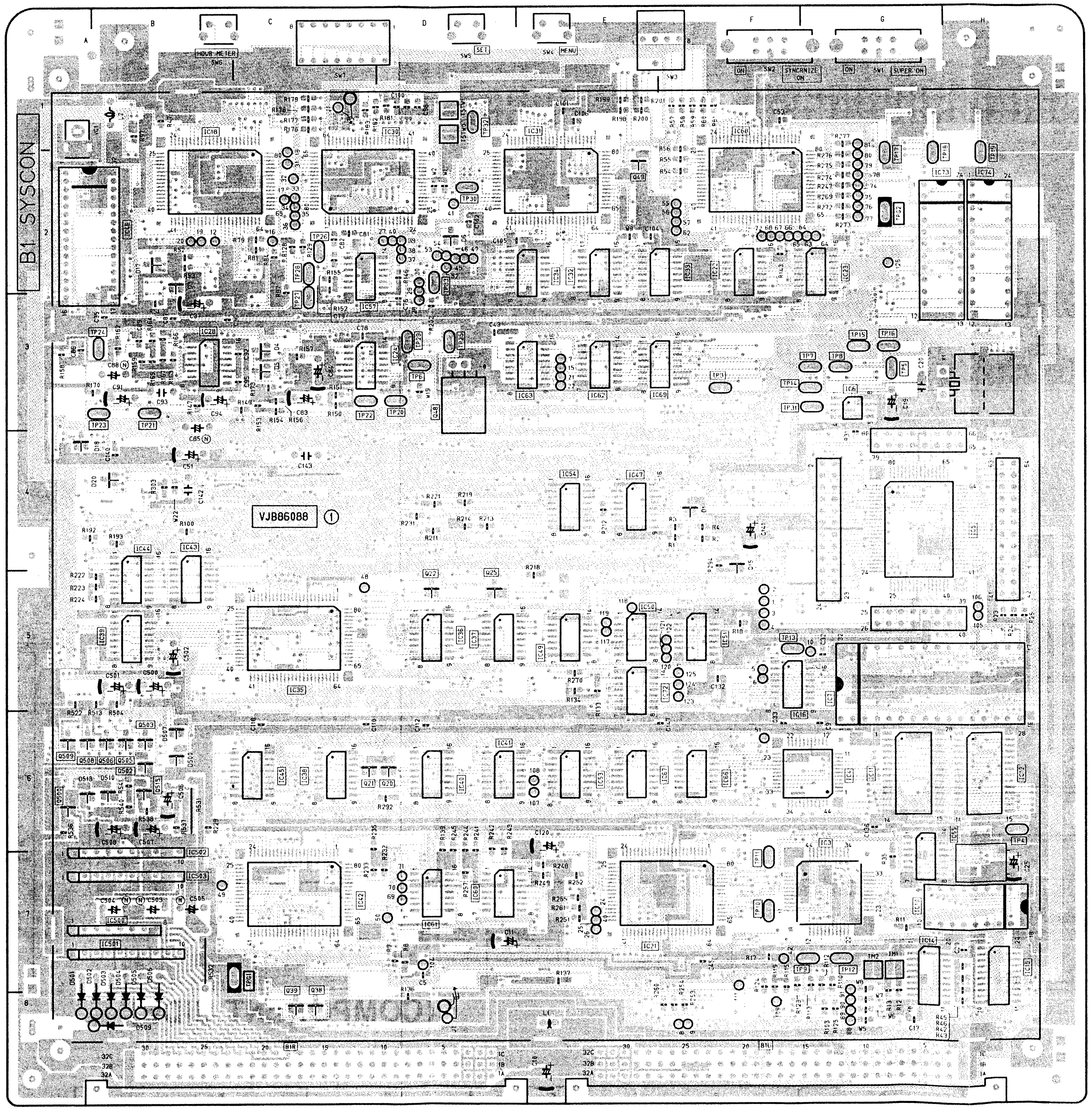
B1 SYSCON
HOUR METER
SW6
SW3
SET
SW5
MENU
SW4
ON
SW2
SYNCRONIZE
SW1
SUPER ON
VJB86088 ①
B1R
B1L

(COMPONENT SIDE)

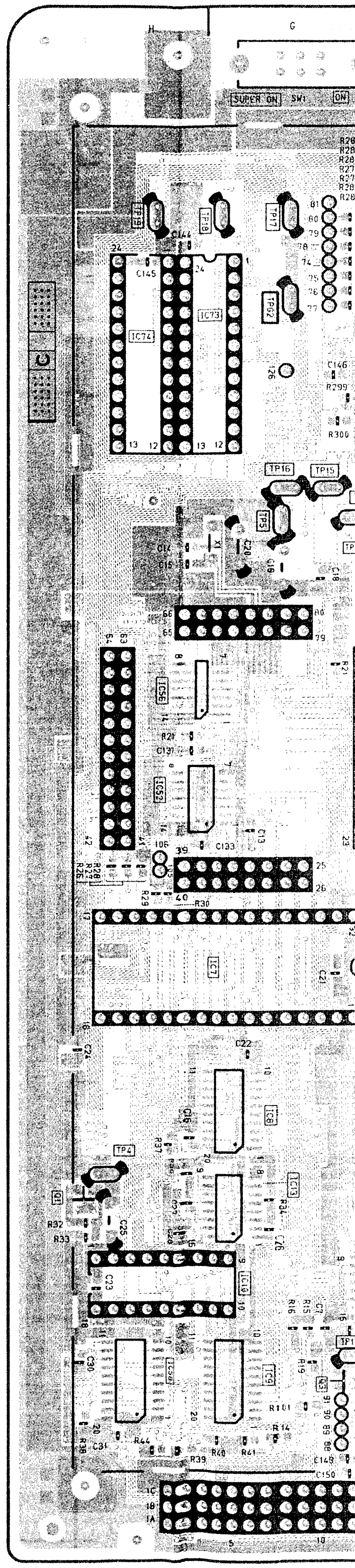
SUPER ON
SW1

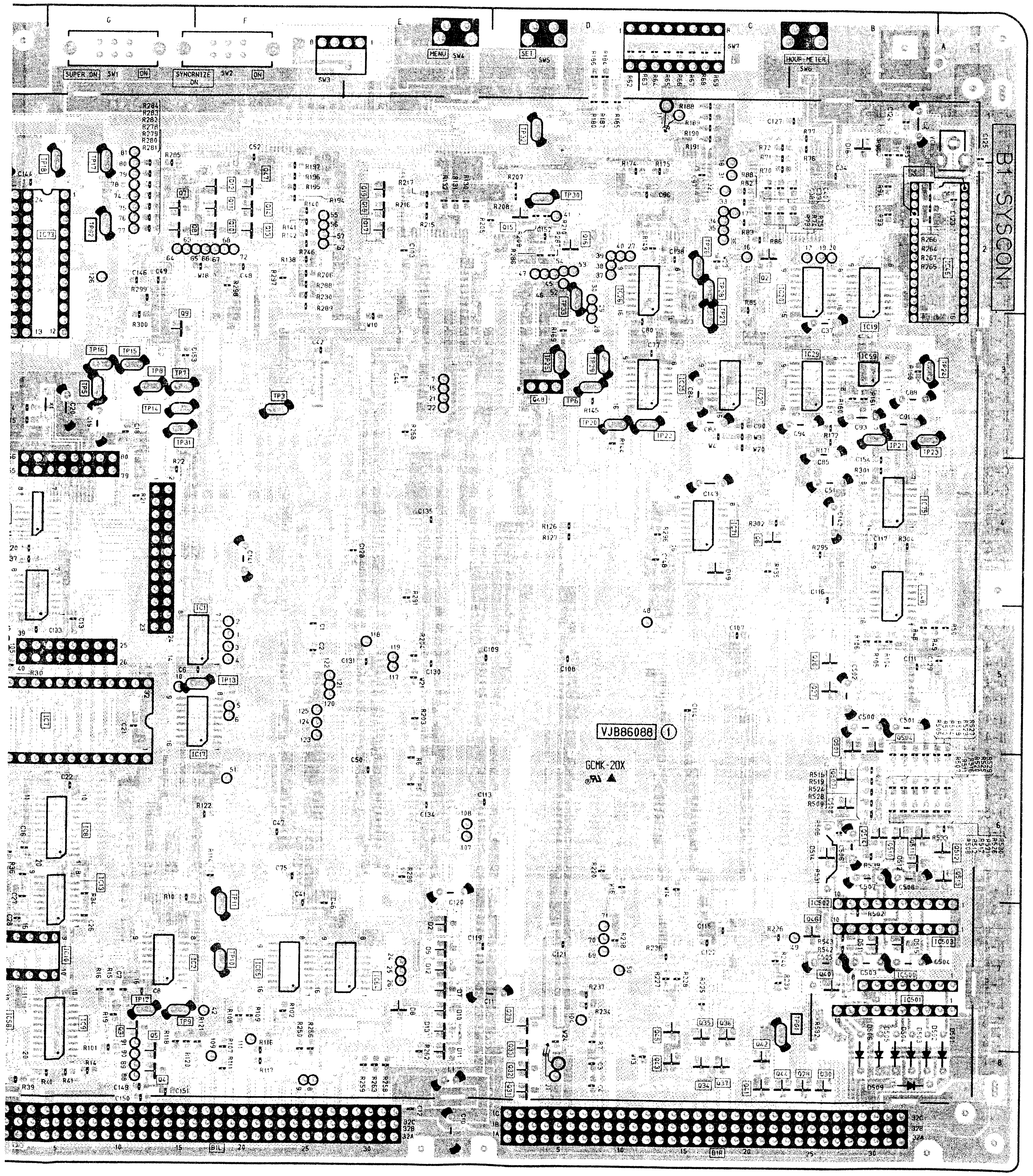
B1 SYSCON
SUPER. ON SW1 ON
SYNCHRONIZE SW2 ON
SW3
MENU SW4
SET SW5
SW7
HOUR-METER SW6
VJB86088 ①
GCMK-20X
B1L
B1R

(FOIL SIDE)

CHIP PART INFORMATION

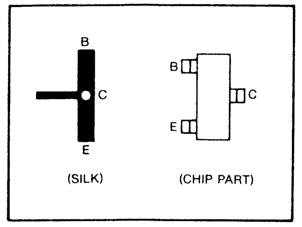
B
C
E
(SILK)
B
C
E
(CHIP PART)

P.C. Board Location

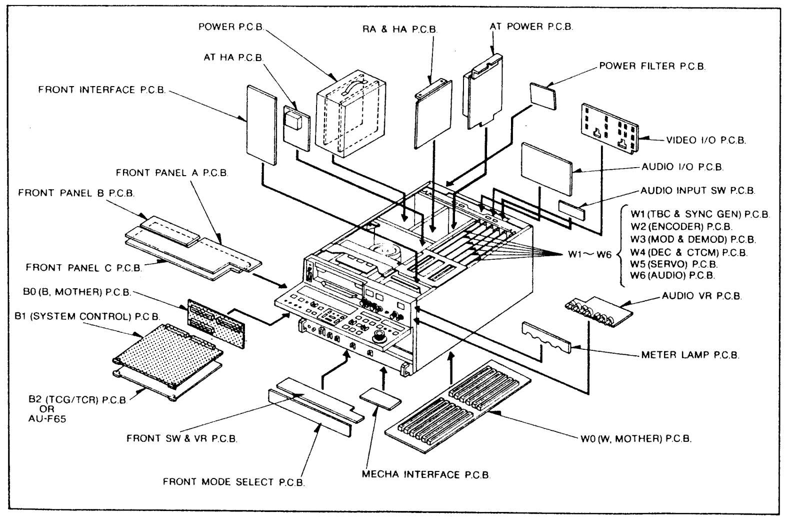
POWER P.C.B.
RA & HA P.C.B.
AT POWER P.C.B.
AT HA P.C.B.
POWER FILTER P.C.B.
FRONT INTERFACE P.C.B.
VIDEO I/O P.C.B.
FRONT PANEL A P.C.B.
AUDIO I/O P.C.B.
FRONT PANEL B P.C.B.
AUDIO INPUT SW P.C.B.
W1 (TBC & SYNC GEN) P.C.B.
W2 (ENCODER) P.C.B.
W3 (MOD & DEMOD) P.C.B.
W4 (DEC & CTCM) P.C.B.
W5 (SERVO) P.C.B.
W6 (AUDIO) P.C.B.
W1 ~ W6
FRONT PANEL C P.C.B.
AUDIO VR P.C.B.
B0 (B, MOTHER) P.C.B.
B1 (SYSTEM CONTROL) P.C.B.
METER LAMP P.C.B.
B2 (TCG/TCR) P.C.B. OR AU-F65
FRONT SW & VR P.C.B.
W0 (W, MOTHER) P.C.B.
FRONT MODE SELECT P.C.B.
MECHA INTERFACE P.C.B.

B1 (SYSCON)

COMPONENT SIDE

Transistors	
Q20	D-6
Q21	C-6
Q22	D-5
Q25	D-5
Q38	C-8
Q39	C-8
Q48	D-3
Q49	E-2
Q500	A-6
Q502	B-6
Q503	B-6
Q505	B-6
Q506	B-6
Q508	A-6
Q509	A-6
Q515	B-6

Integrated Circuits	
IC3	G-7
IC4	G-6
IC5	G-4
IC6	G-3
IC7	G-6
IC10	H-7
IC11	G-6
IC12	H-6
IC14	G-7
IC15	H-7
IC16	F-5
IC18	B-2
IC21	F-7
IC22	F-2
IC23	G-2
IC24	C-3
IC28	B-3
IC30	C-2
IC31	E-2
IC32	E-2
IC33	F-2
IC34	E-2
IC35	C-5
IC36	D-5
IC37	D-5
IC38	C-6
IC39	B-5
IC40	D-6
IC41	D-6
IC42	C-7
IC43	B-5
IC44	B-5
IC45	C-6
IC46	A-2
IC47	E-4
IC49	E-5
IC50	E-5
IC51	F-5
IC53	E-6
IC54	E-4
IC55	G-7
IC57	C-2
IC60	D-7
IC61	D-7
IC62	E-3
IC63	E-3
IC66	F-6
IC67	E-6
IC68	F-2
IC69	F-3
IC72	E-5
IC73	H-2
IC74	H-2
IC500	B-7
IC501	B-7
IC502	B-7
IC503	B-7

Test Points	
TP3	F-3
TP4	H-6
TP5	G-3
TP6	D-3
TP7	G-3
TP8	G-3
TP9	G-7
TP10	F-7
TP11	F-7
TP12	G-7
TP13	F-5
TP14	G-3
TP15	G-3
TP16	G-3
TP17	G-2
TP18	G-2
TP19	H-2
TP20	D-3
TP21	B-3
TP22	C-3
TP23	B-3
TP24	B-3
TP25	D-3
TP26	C-2
TP27	C-3
TP28	C-2
TP29	D-3
TP30	D-2
TP31	G-3
TP32	D-1
TP33	D-2

TP GND	
TPG1	C-7
TPG2	G-2

Others	
VC1	A-1

FOIL SIDE

Transistors	
Q1	H-6
Q2	C-2
Q3	G-7
Q4	G-8
Q5	G-8
Q6	C-4
Q7	G-2
Q8	G-2
Q9	G-3
Q10	F-2
Q11	F-2
Q12	F-2
Q13	F-2
Q14	F-2
Q15	D-2
Q16	D-2
Q17	E-2
Q18	E-2
Q19	E-2
Q26	B-5
Q27	B-5
Q28	B-8
Q29	D-7
Q30	B-8
Q31	D-8
Q32	D-8
Q33	D-8
Q34	C-8
Q35	C-7
Q36	C-7
Q37	C-8
Q40	B-7
Q41	C-8
Q42	C-8
Q43	C-8
Q44	B-8
Q45	C-7
Q46	B-7
Q47	F-2
Q501	B-5
Q504	B-5
Q507	B-6
Q510	B-6
Q511	B-6
Q512	A-6
Q513	A-6
Q514	B-6

Integrated Circuits	
IC1	F-5
IC2	G-7
IC8	G-6
IC9	G-7
IC13	G-7
IC17	F-5
IC19	B-2
IC20	B-2
IC25	C-3
IC26	C-2
IC27	C-3
IC29	B-3
IC48	B-4
IC52	H-4
IC56	H-4
IC58	H-7
IC59	B-3
IC64	E-7
IC65	F-7
IC71	C-4
IC75	B-4

B2 (TCG/TCR)

COMPONENT SIDE

Transistors	
Q202	E-1
Q203	E-2

Integrated Circuits	
IC1	D-3
IC2	D-2
IC3	C-2
IC4	E-6
IC5	E-5
IC6	E-6
IC7	D-4
IC8	B-3
IC9	B-7
IC10	B-7
IC11	B-5
IC12	B-8
IC13	B-8
IC14	C-6
IC15	B-7
IC16	C-8
IC17	B-7
IC18	D-7
IC19	C-8
IC20	C-5
IC21	C-5
IC201	H-7
IC202	G-3
IC203	G-2
IC204	H-2
IC205	H-4
IC206	H-5
IC207	H-6
IC208	H-3
IC209	G-2
IC210	F-2
IC211	F-2
IC212	F-2
IC213	F-4
IC215	F-5
IC216	G-6
IC217	F-4
IC218	G-3
IC220	G-7
IC221	F-7
IC222	E-2
IC223	G-5
IC224	F-3

Test Points	
TP1	B-5
TP2	B-6
TP3	A-7
TP4	C-6
TP5	B-6
TP6	A-3
TP201	H-7
TP202	H-6
TP203	G-1
TP204	F-1
TP205	G-1
TP206	F-1
TP207	G-2
TP208	G-2
TP209	H-3
TP210	F-3
TP211	H-4
TP212	F-6

TP GND	
TPG1	B-1
TPG201	H-1

Others	
VR201	H-5
VR202	H-6
VR203	H-5
VR204	H-2
VR205	G-5
VR206	F-5
VR207	F-5
VR208	F-5
VR209	F-6
VR210	G-6
VR211	F-4

FOIL SIDE

Transistors	
Q1	B-4
Q2	B-4
Q3	B-3
Q4	B-3
Q5	C-6
Q6	D-7
Q7	C-7
Q8	A-4
Q9	B-3
Q201	G-2
Q204	F-5
Q205	F-6
Q206	F-6
Q207	F-7
Q208	G-6
Q209	G-6
Q210	G-6
Q211	G-6
Q212	G-6
Q213	F-6

P.C. Board Location

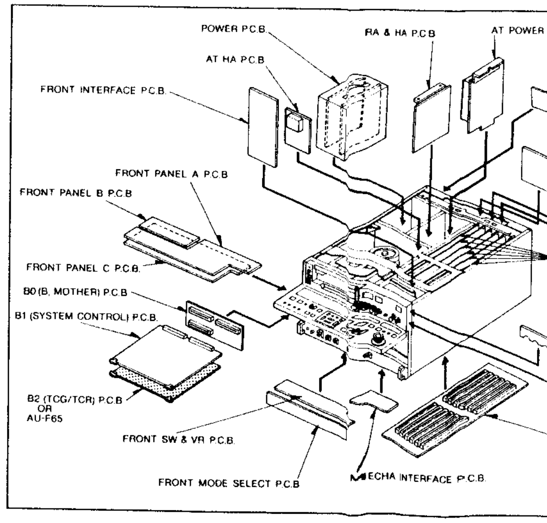

B2(TC & BB)P.C.BOARD

MODEL / TYPE	AU-665	AU-65	AU-63	AU-62
NTSC	VEP86089B	Refer to AU-F65 Section		
PAL	VEP86089F			

CHIP PART INFORMATION

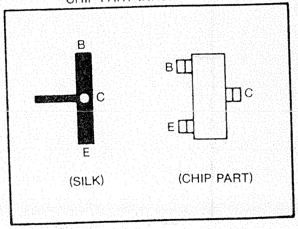
B
C
E
(SILK)
B
C
E
(CHIP PART)

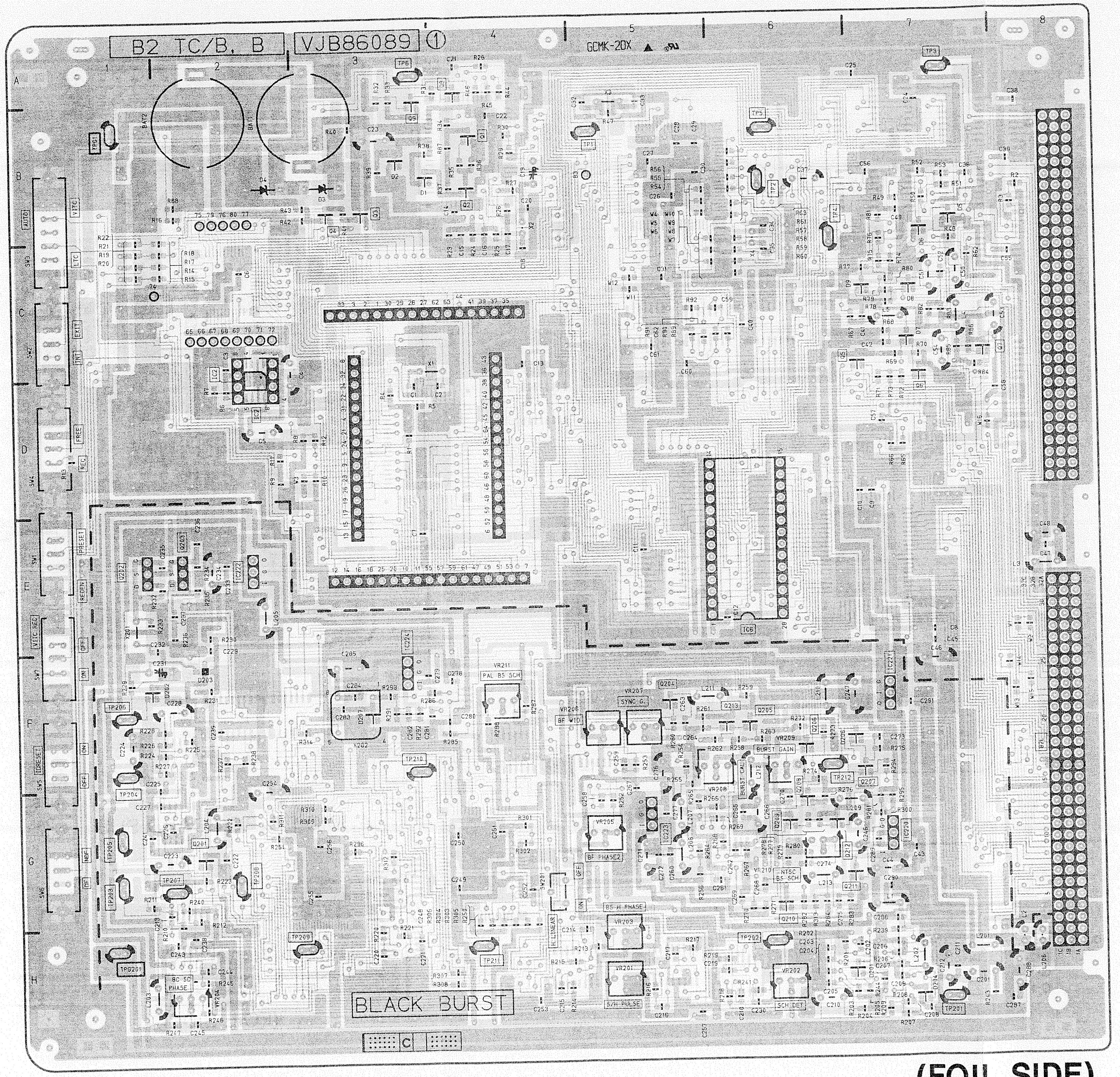
B2 TC/B. B
VJB86089 ①
GCMK-20X
BLACK BURST
A
B
C
D
E
F
G
H
1
2
3
4
5
6
7
8

(FOIL SIDE)

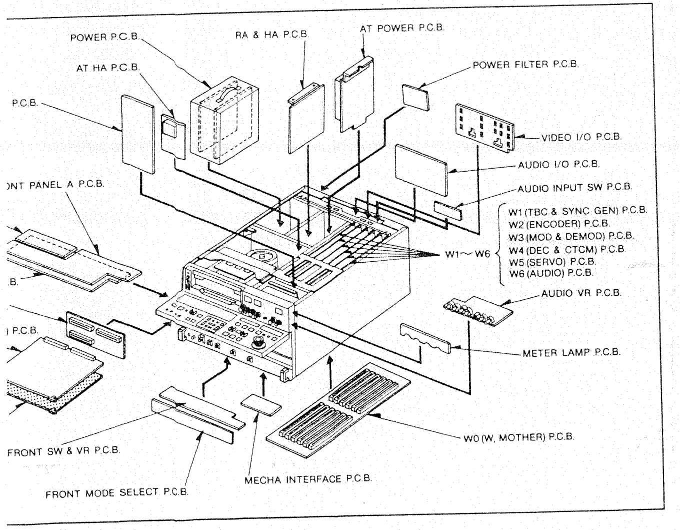
POWER P.C.B.
RA & HA P.C.B.
AT POWER P.C.B.
AT HA P.C.B.
POWER FILTER P.C.B.
P.C.B.
VIDEO I/O P.C.B.
AUDIO I/O P.C.B.
ONT PANEL A P.C.B.
AUDIO INPUT SW P.C.B.
W1 (TBC & SYNC GEN) P.C.B.
W2 (ENCODER) P.C.B.
W3 (MOD & DEMOD) P.C.B.
W4 (DEC & CTCM) P.C.B.
W5 (SERVO) P.C.B.
W6 (AUDIO) P.C.B.
W1~W6
.B.
AUDIO VR P.C.B.
) P.C.B.
METER LAMP P.C.B.
W0 (W, MOTHER) P.C.B.
FRONT SW & VR P.C.B.
MECHA INTERFACE P.C.B.
FRONT MODE SELECT P.C.B.

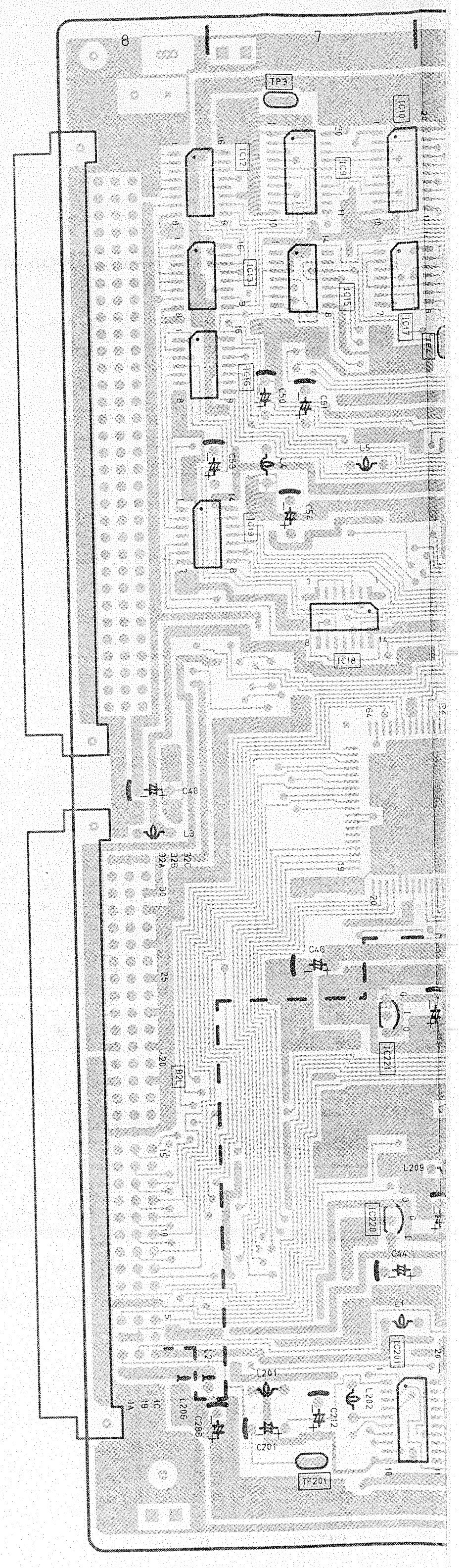
8
7
TP3
TP201

This P.C.Bo
P.C.Board D
AU-F65 sect

BOARD

TYPE \ MODEL	AU-665	AU-65	AU-63	AU-62
NTSC	VEP86089B	Refer to AU-F65 Section		
PAL	VEP86089F			

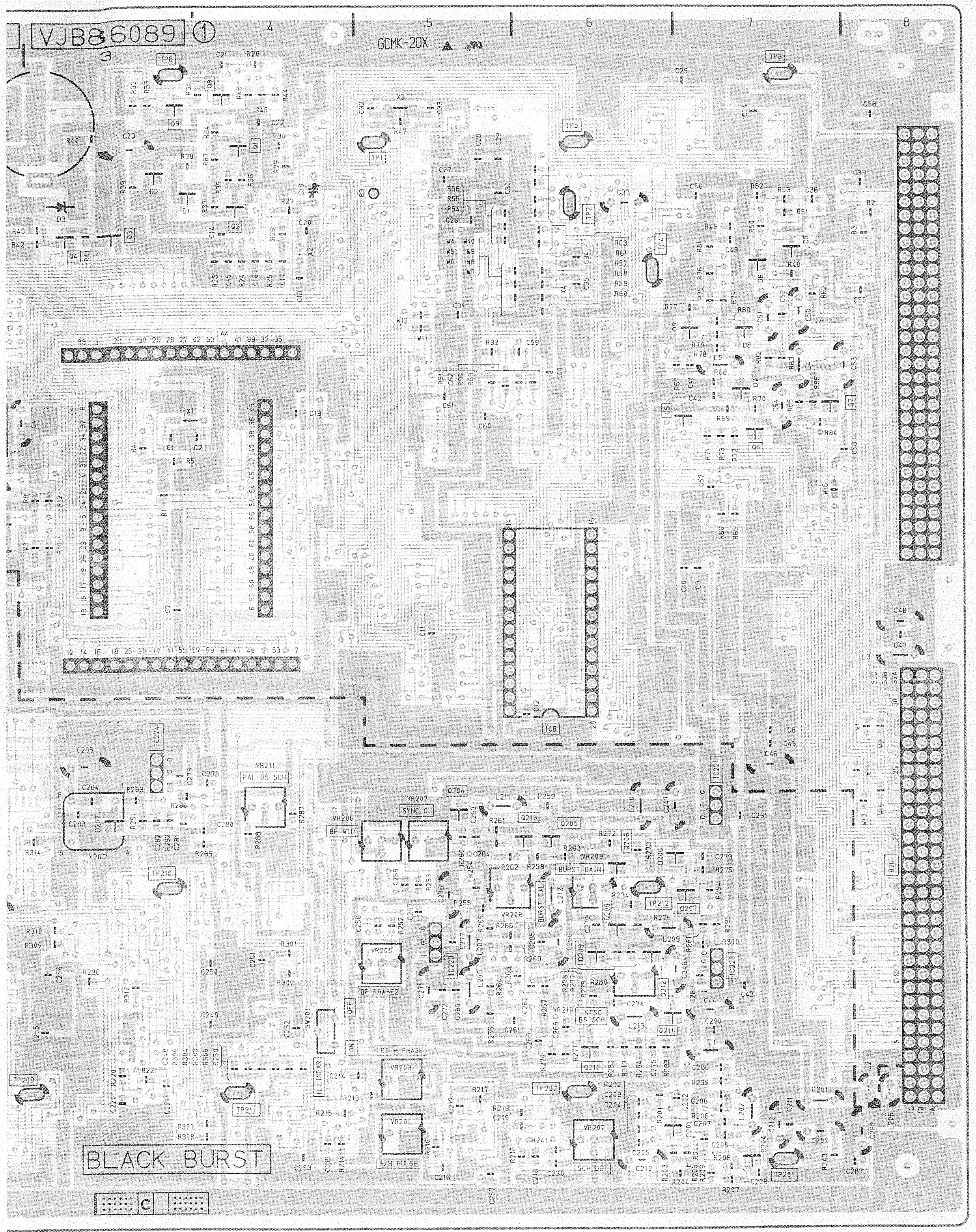
VJB86089 ①
GCMK-20X
BLACK BURST

(FOIL SIDE)

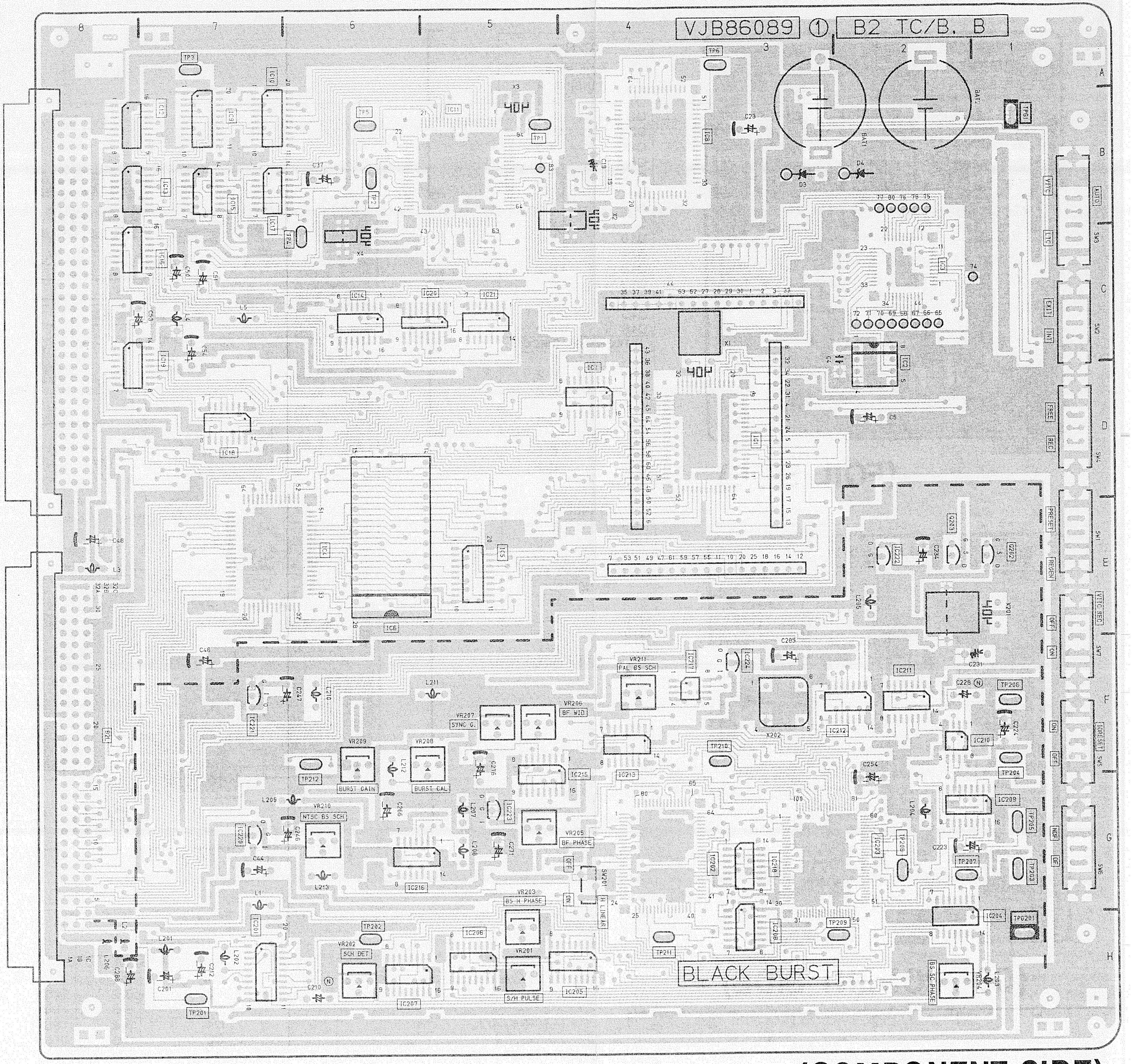
VJB86089 ①
B2 TC/B. B
BLACK BURST
40P

(COMPONENT SIDE)

This P.C.Board Diagram is used for AU-665.
P.C.Board Diagram of AU-F65 is shown in
AU-F65 section, page after 7-1.

REVERSE SIDE
AT. HA P.C.BOARD
AT POWER P.C.BOA
AUDIO I/O P.C.BOA

AT H.A P.C.BOARD

MODEL / TYPE	AU-665	AU-65	AU-63	AU-62
NTSC	VEP85018A	Not Used	Not Used	Not Used
PAL	VEP85018B	Not Used	Not Used	Not Used

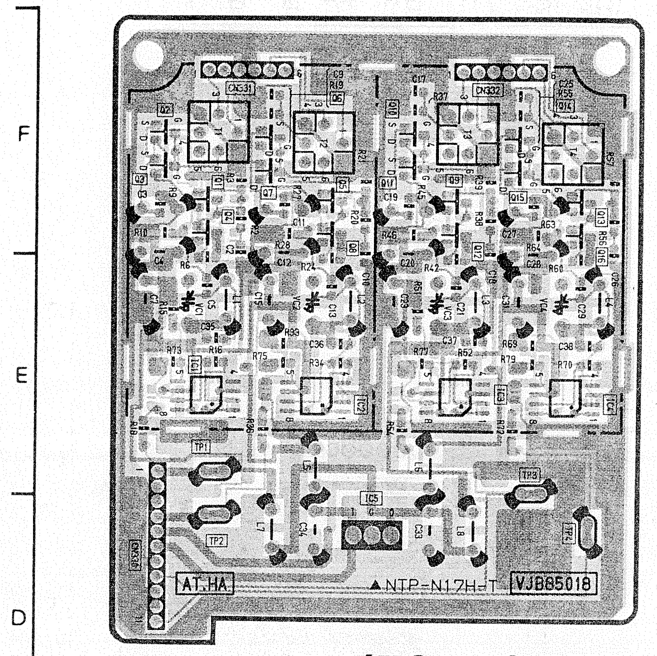
F
E
D
CN331
CN332
TP1
TP2
TP3
TP4
IC5
CN330
AT.HA
▲NTP=N17H-T
VJB85018

(FOIL SIDE)

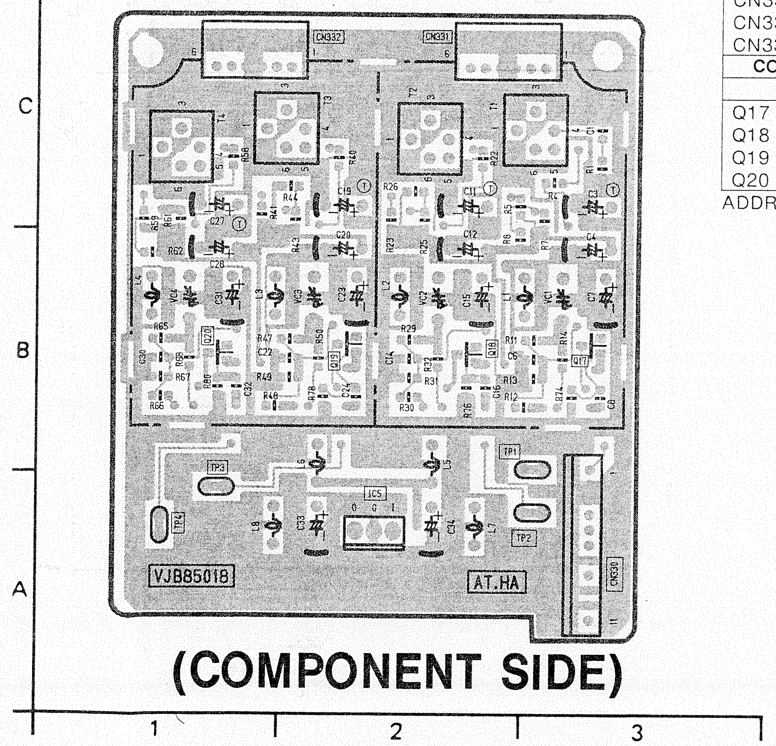
C
B
A
1
2
3
CN332
CN331
TP1
TP3
IC5
VJB85018
AT.HA
CN330

(COMPONENT SIDE)

AT H.A	
FOIL SIDE	
TRANSISTOR	
Q1	F-1
Q2	F-1
Q3	F-1
Q4	F-1
Q5	F-2
Q6	F-1
Q7	F-1
Q8	F-2
Q9	F-2
Q10	F-2
Q11	F-2
Q12	F-2
Q13	F-3
Q14	F-2
Q15	F-2
Q16	F-3
INTEGRATED CIRCUIT	
IC1	E-1
IC2	E-2
IC3	E-2
IC4	E-3
IC5	D-2
TEST POINT	
TP1	E-1
TP2	D-1
TP3	E-3
TP4	D-3
CONNECTOR	
CN330	D-1
CN331	F-1
CN332	F-2
COMPONENT SIDE	
TRANSISTOR	
Q17	B-3
Q18	B-2
Q19	B-2
Q20	B-1

ADDRESS INFORMATION

```
AT.HA.):This P.C.Board Diagram is used for
        AU-665 only. AU-63's AT Head signal
        is amplifyed by RA&HA P.C.Board.
```

AT POWER P.C.BOARD

MODEL / TYPE	AU-665	AU-65	AU-63	AU-62
NTSC	VEP82062A	Not Used	VEP82062A	Not Used
PAL	VEP82062A	Not Used	VEP82062A	Not Used

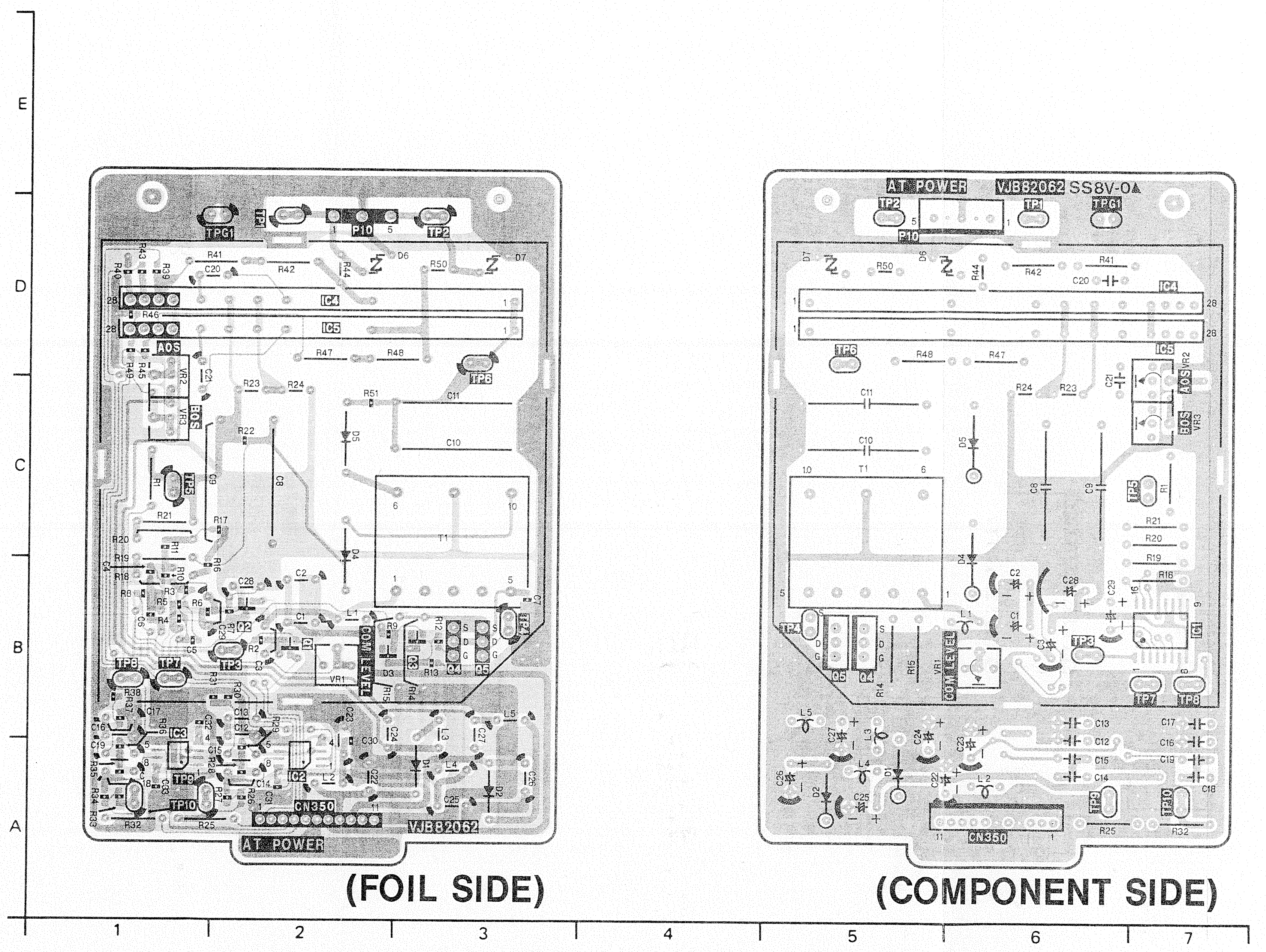
E
D
C
B
A
1
2
3
4
5
6
7
TPG1
TP1
P10
TP2
IC4
IC5
AOS
BOS
TP6
T1
COM LEVEL
VR1
TP3
TP4
TP5
TP7
TP8
TP9
TP10
IC1
IC2
IC3
CN350
AT POWER
VJB82062
VJB82062 SS8V-0▲

(FOIL SIDE)

(COMPONENT SIDE)

AT POWER							
FOIL SIDE		**TEST POINT**		**ADJUSTMENT**		**COMPONENT SIDE**	
TRANSISTOR						**INTEGRATED CIRCUIT**	
Q1	B-2	TP1	D-2	VR1	B-2	IC1	B-7
Q2	B-2	TP2	D-3	VR2	C-1		
Q3	B-3	TP3	B-2	VR3	C-1		
Q4	B-3	TP4	B-3				
Q5	B-3	TP5	C-1				
INTEGRATED CIRCUIT		TP6	D-3				
IC2	A-2	TP7	B-1				
IC3	A-1	TP8	B-1				
IC4	D-2	TP9	A-1				
IC5	D-2	TP10	A-1				
		TPG1	D-2				

ADDRESS INFORMATION

AUDI

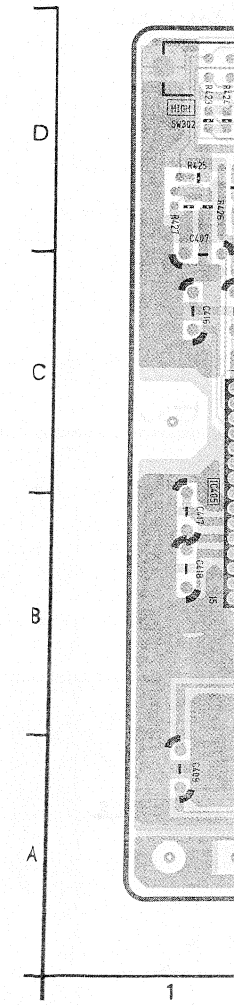

AUDIO

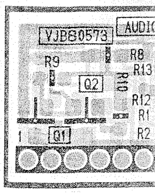
VJB80573
R9
Q2
Q1
R8
R13
R10
R12
R1
R2

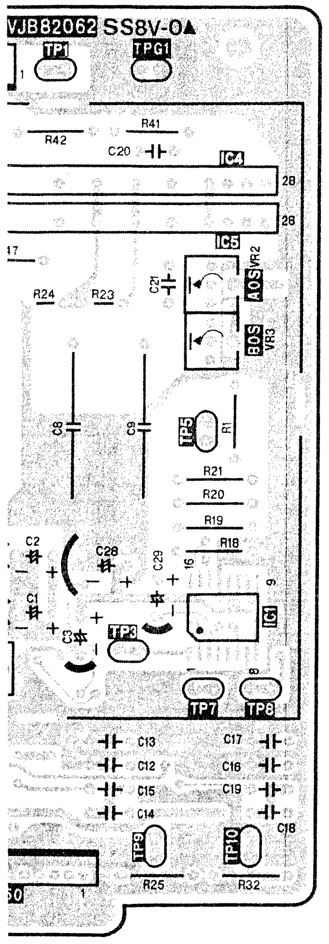
VJB82062 SS8V-0▲
TP1
TPG1
R41
R42
C20
IC4
IC5
IC6
R24
R23
C21
VR2
VR3
C8
C9
TP5
R1
R21
R20
R19
R18
C2
C28
C29
C1
C3
IC1
TP3
TP7
TP8
C13
C12
C15
C14
C17
C16
C19
C18
TP9
TP10
R25
R32

ONENT SIDE)

AUDIO I/O P.C.BOARD

MODEL / TYPE	AU-665	AU-65	AU-63	AU-62
NTSC	VEP84094B	VEP84094A	VEP84094C	VEP84094C
PAL	VEP84094D	VEP84094A	VEP84094C	VEP84094C

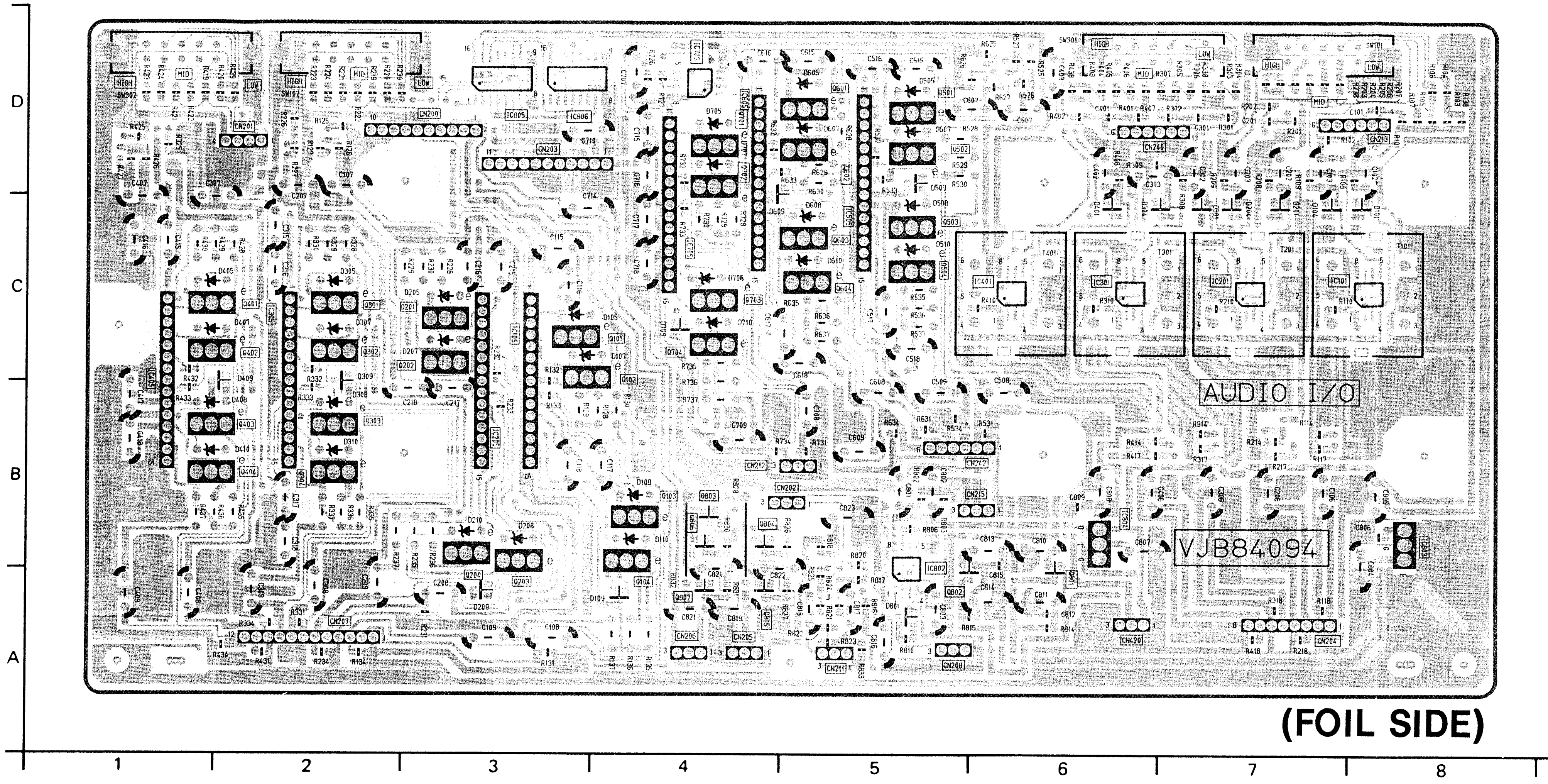
D
C
B
A
AUDIO I/O
VJB84094
HIGH
MID
LOW
1
2
3
4
5
6
7
8

(FOIL SIDE)

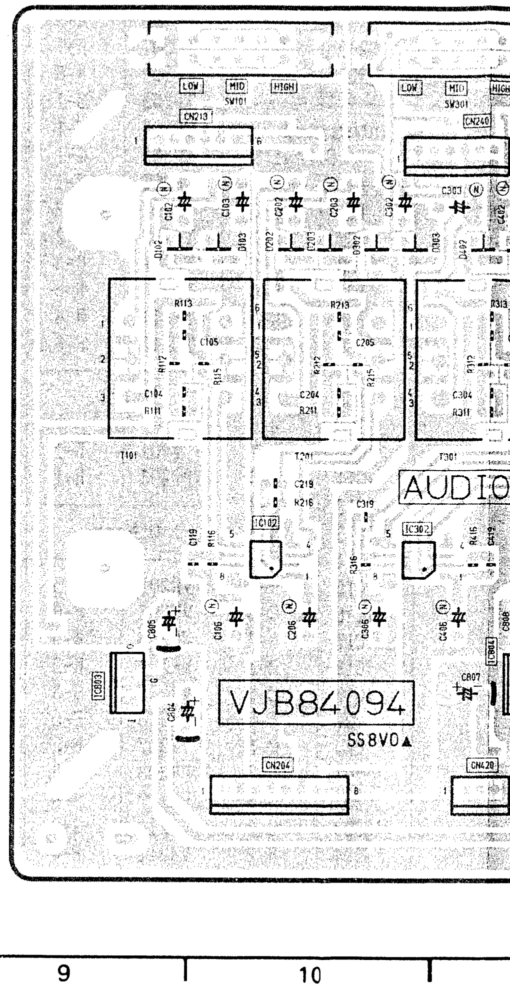
AUDIO
VJB84094
SS8V0▲
HIGH
MID
LOW
9
10

AUDIO I/O P.C.BOARD SUB

MODEL / TYPE	AU-665	AU-65	AU-63	AU-62
NTSC	VEP80573A	VEP80573A	VEP80573A	VEP80573A
PAL	VEP80573A	VEP80573A	VEP80573A	VEP80573A

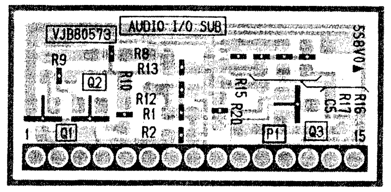
VJB80573
AUDIO I/O SUB
SS8V0▲
R9
R8
R13
Q2
R10
R15
R20
R12
R16
R1
R2
R11
C5
Q1
P1
Q3
1
15

(FOIL SIDE)

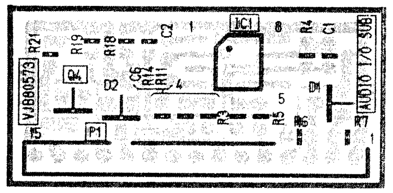
VJB80573
AUDIO I/O SUB
R21
R19
R18
C2
IC1
R4
C1
Q4
D2
C6
R14
R11
R3
R5
D1
P1
1
5
7
8

(COMPONENT SIDE)

AUDIO I/O

Ref.	Address
FOIL SIDE	
TRANSISTOR	
Q101	C-3
Q102	C-3
Q103	B-4
Q104	B-4
Q201	C-3
Q202	C-3
Q203	B-3
Q204	B-3
Q301	C-2
Q302	C-2
Q303	B-2
Q304	B-2
Q401	C-2
Q402	C-2
Q403	B-2
Q404	B-2
Q501	D-5
Q502	D-5
Q503	C-5
Q504	C-5
Q601	D-5
Q602	D-5
Q603	C-5
Q604	C-5
Q701	D-4
Q702	D-4
Q703	C-4
Q704	C-4
Q801	A-6
Q802	A-5
Q803	B-4
Q804	B-4
Q805	A-4
Q806	B-4
Q807	A-4
INTEGRATED CIRCUIT	
IC101	C-8
IC105	C-3
IC201	C-7
IC205	B-3
IC301	C-6
IC305	C-2
IC401	C-6
IC405	C-1
IC505	C-5
IC605	D-4
IC703	D-4
IC705	C-4
IC802	B-5
IC803	B-8
IC804	B-6
IC805	D-3
IC806	D-3
CONNECTOR	
CN200	D-3
CN201	D-2
CN202	B-5
CN203	D-3
CN204	A-7
CN205	A-4
CN206	A-4
CN207	A-2
CN208	A-5
CN211	A-5
CN212	B-5
CN213	D-8
CN215	B-6
CN240	D-6
CN242	B-5
CN420	A-6
COMPONENT SIDE	
INTEGRATED CIRCUIT	
IC102	B-10
IC103	D-15
IC302	B-10
IC303	D-16
IC503	D-11
IC704	D-13
IC801	B-12
IC808	B-12

ADDRESS INFORMATION

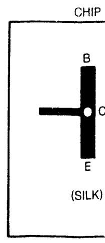
CHIP
B
C
E
(SILK)

U-63	AU-62
84094C	VEP84094C
84094C	VEP84094C

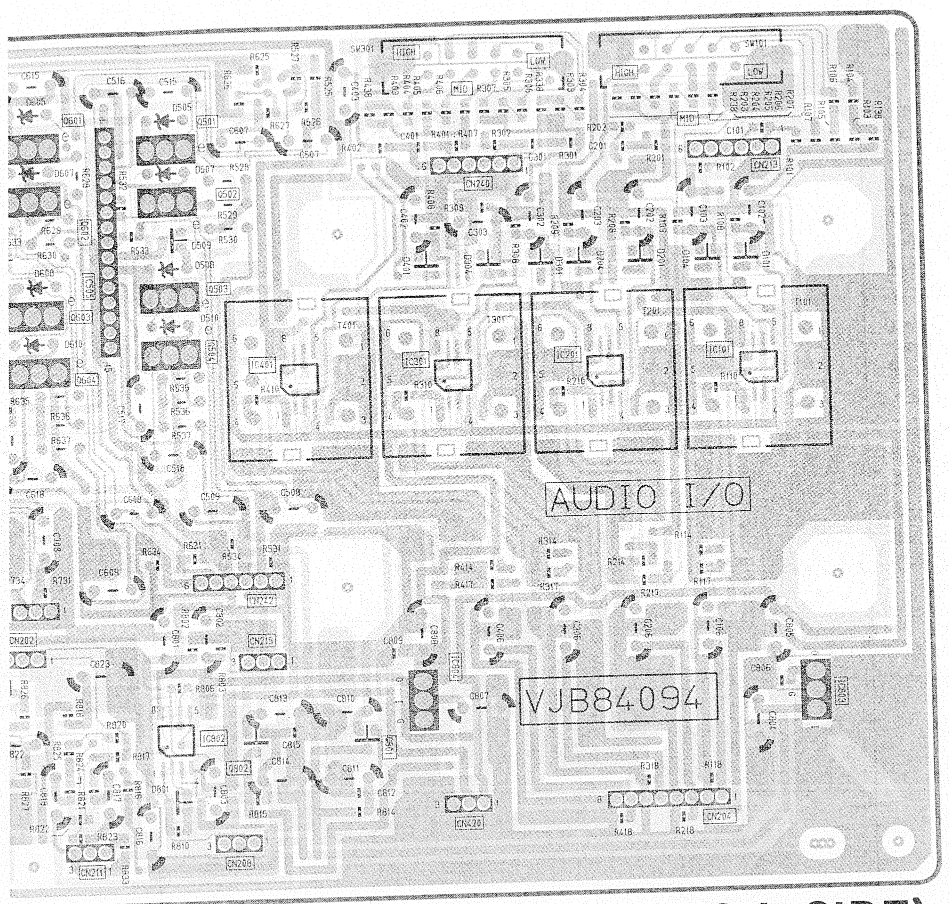
AUDIO I/O
VJB84094

(FOIL SIDE)

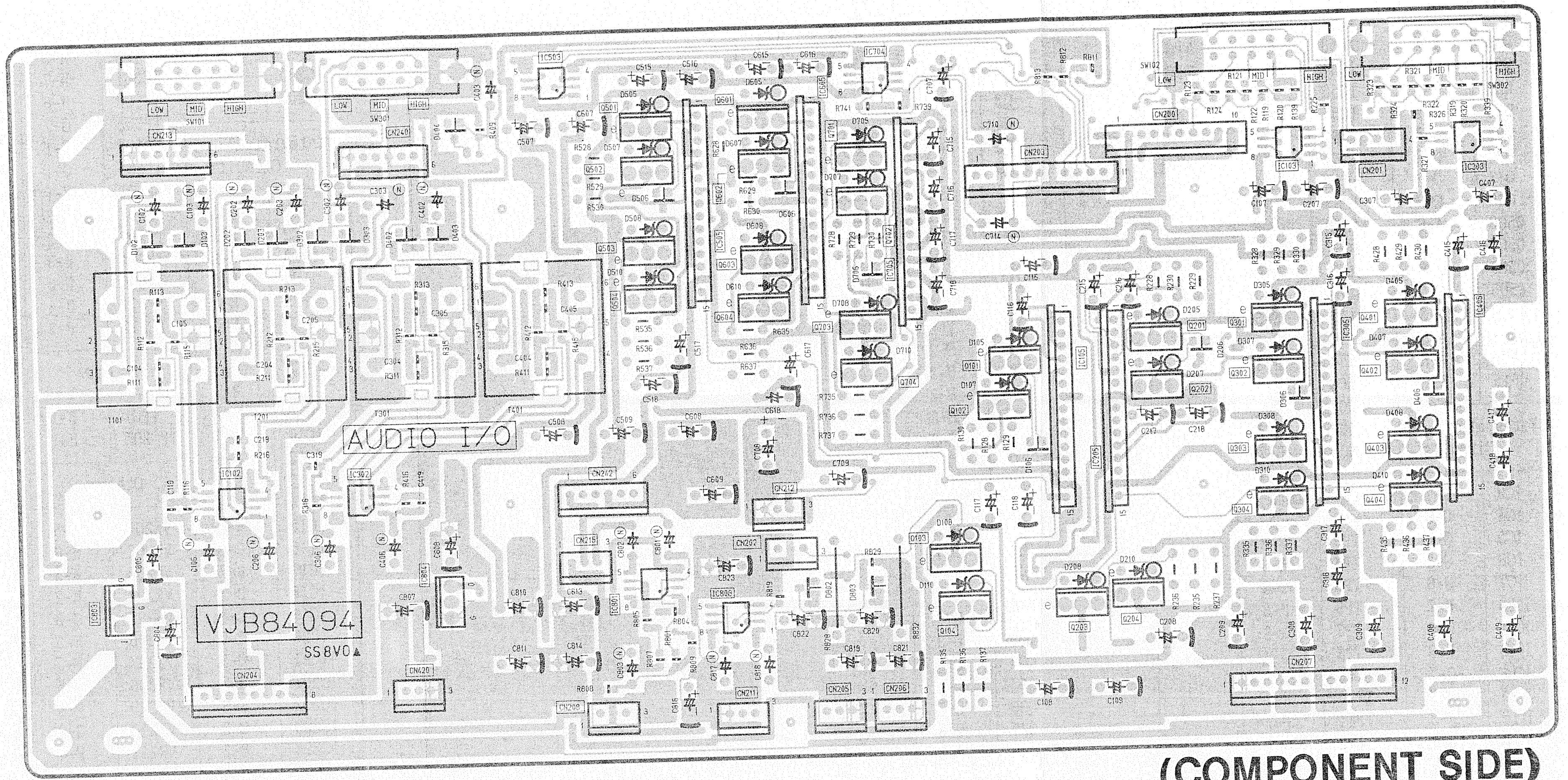
AUDIO I/O
VJB84094
SS8V0▲

(COMPONENT SIDE)

5
6
7
8
9
10
11
12
13
14
15
16

3	AU-62
73A	VEP80573A
73A	VEP80573A

AUDIO I/O

FOIL SIDE	
TRANSISTOR	
Q101	C-3
Q102	C-3
Q103	B-4
Q104	B-4
Q201	C-3
Q202	C-3
Q203	B-3
Q204	B-3
Q301	C-2
Q302	C-2
Q303	B-2
Q304	B-2
Q401	C-2
Q402	C-2
Q403	B-2
Q404	B-2
Q501	D-5
Q502	D-5
Q503	C-5
Q504	C-5
Q601	D-5
Q602	D-5
Q603	C-5
Q604	C-5
Q701	D-4
Q702	D-4
Q703	C-4
Q704	C-4
Q801	A-6
Q802	A-5
Q803	B-4
Q804	B-4
Q805	A-4
Q806	B-4
Q807	A-4
INTEGRATED CIRCUIT	
IC101	C-8
IC105	C-3
IC201	C-7
IC205	B-3
IC301	C-6
IC305	C-2
IC401	C-6
IC405	C-1
IC505	C-5
IC605	D-4
IC703	D-4
IC705	C-4
IC802	B-5
IC803	B-8
IC804	B-6
IC805	D-3
IC806	D-3
CONNECTOR	
CN200	D-3
CN201	D-2
CN202	B-5
CN203	D-3
CN204	A-7
CN205	A-4
CN206	A-4
CN207	A-2
CN208	A-5
CN211	A-5
CN212	B-5
CN213	D-8
CN215	B-6
CN240	D-6
CN242	B-5
CN420	A-6

COMPONENT SIDE	
INTEGRATED CIRCUIT	
IC102	B-10
IC103	D-15
IC302	B-10
IC303	D-16
IC503	D-11
IC704	D-13
IC801	B-12
IC808	B-12

ADDRESS INFORMATION

CHIP PART INFORMATION

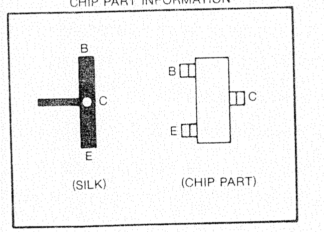
B
C
E
(SILK)
B
C
E
(CHIP PART)

P.C. Board Location

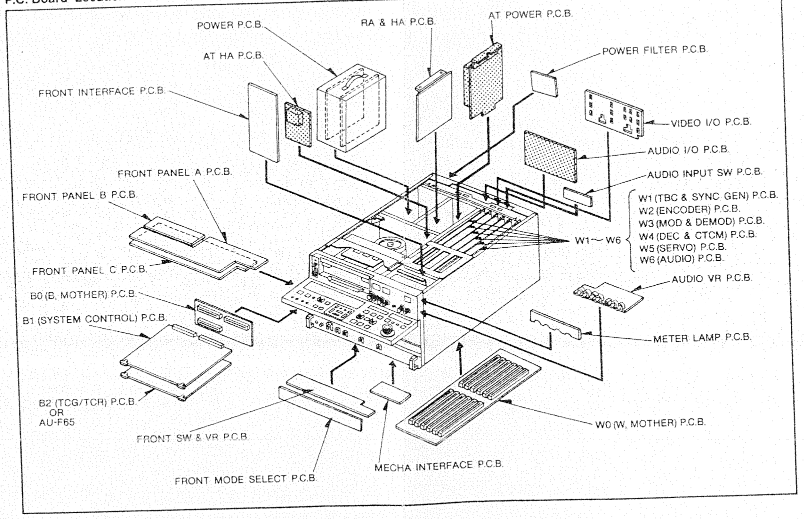
POWER P.C.B.
RA & HA P.C.B.
AT POWER P.C.B.
AT HA P.C.B.
POWER FILTER P.C.B.
FRONT INTERFACE P.C.B.
VIDEO I/O P.C.B.
AUDIO I/O P.C.B.
FRONT PANEL A P.C.B.
AUDIO INPUT SW P.C.B.
FRONT PANEL B P.C.B.
W1 (TBC & SYNC GEN) P.C.B.
W2 (ENCODER) P.C.B.
W3 (MOD & DEMOD) P.C.B.
W1～W6
W4 (DEC & CTCM) P.C.B.
W5 (SERVO) P.C.B.
W6 (AUDIO) P.C.B.
FRONT PANEL C P.C.B.
AUDIO VR P.C.B.
B0 (B, MOTHER) P.C.B.
B1 (SYSTEM CONTROL) P.C.B.
METER LAMP P.C.B.
B2 (TCG/TCR) P.C.B.
OR
AU-F65
W0 (W, MOTHER) P.C.B.
FRONT SW & VR P.C.B.
MECHA INTERFACE P.C.B.
FRONT MODE SELECT P.C.B.

AUDIO VR P.C.BOARD

TYPE \ MODEL	AU-665	AU-65	AU-63	AU-62
NTSC	VEP84102A	VEP84101A	VEP84101C	VEP84101B
PAL	VEP84102A	VEP84101A	VEP84101C	VEP84101B

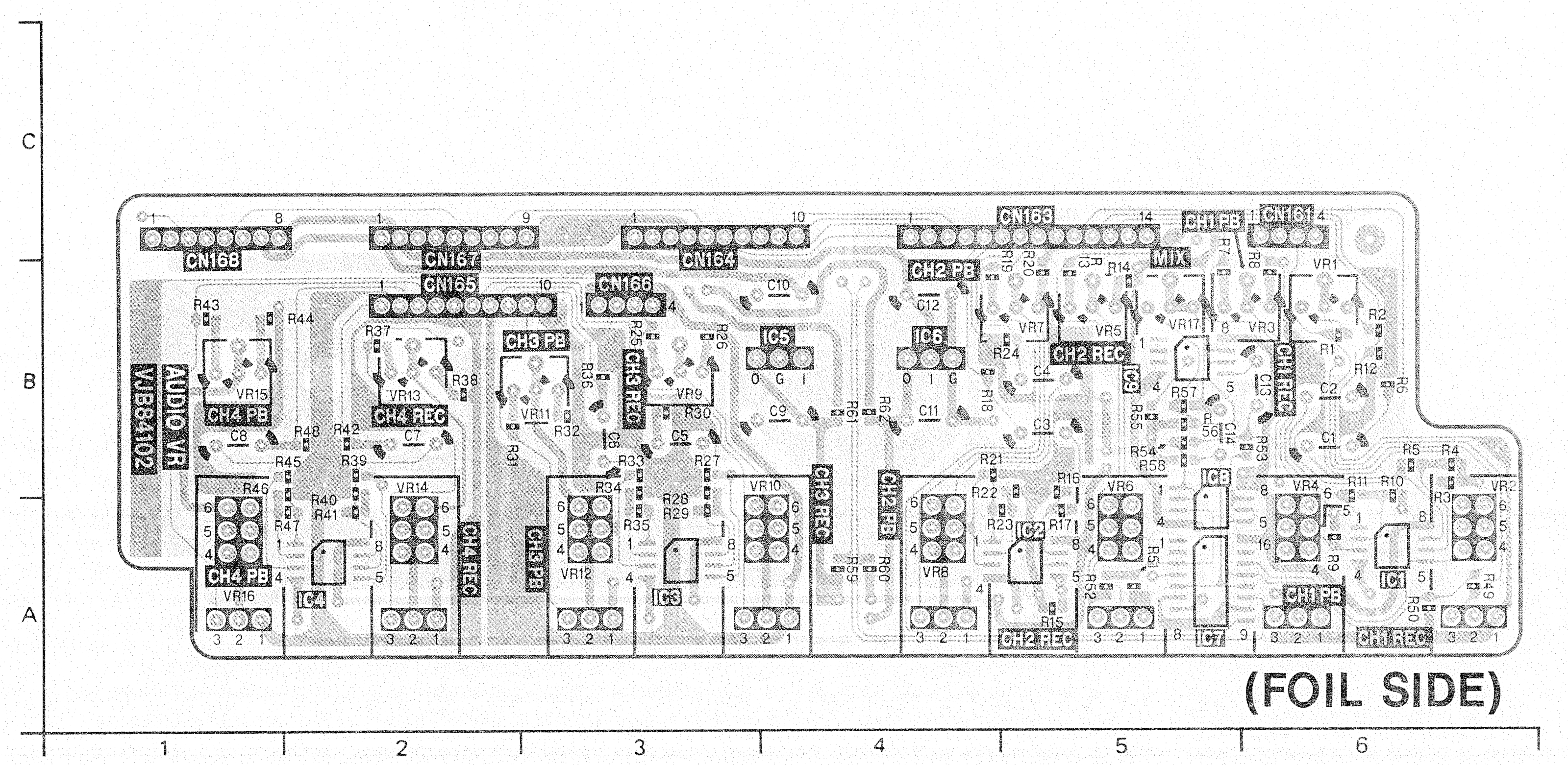

C
B
A
1
2
3
4
5
6
CN168
CN167
CN165
CN164
CN166
CN163
CH1 PB
CN161
CH2 PB
MIX
AUDIO VR
VJB84102
CH4 PB
CH4 REC
CH3 PB
CH3 REC
CH2 REC
CH1 REC
IC1
IC2
IC3
IC4
IC5
IC6
IC7
IC8
IC9
VR1
VR2
VR3
VR4
VR5
VR6
VR7
VR8
VR9
VR10
VR11
VR12
VR13
VR14
VR15
VR16
VR17

(FOIL SIDE)

AUDIO VR			
FOIL SIDE		VR9	B-3
INTEGRATED CIRCUIT		VR10	A-4
IC1	A-6	VR11	B-3
IC2	A-5	VR12	A-3
IC3	A-3	VR13	B-2
IC4	A-2	VR14	A-2
IC5	B-4	VR15	B-1
IC6	B-4	VR16	A-1
IC7	A-5	VR17	B-5
IC8	A-5	CONNECTOR	
IC9	B-5	CN161	C-6
ADJUSTMENT		CN163	C-5
VR1	B-6	CN164	C-3
VR2	A-6	CN165	B-2
VR3	B-6	CN166	B-3
VR4	A-6	CN167	C-2
VR5	B-5	CN168	C-1
VR6	A-5		
VR7	B-5		
VR8	A-4		

ADDRESS INFORMATION

AUDIO INPUT

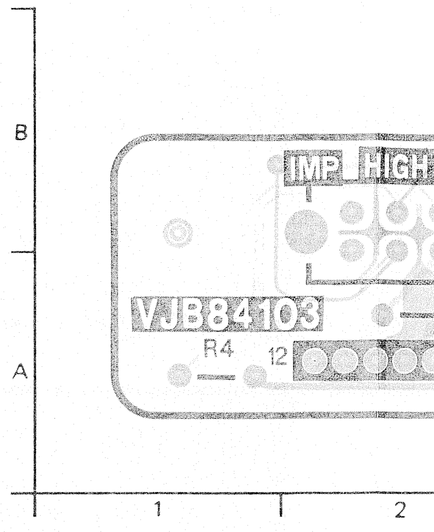

B
A
1
2
IMP
HIGH
VJB84103
R4
12

CHIP PART INFORMATION

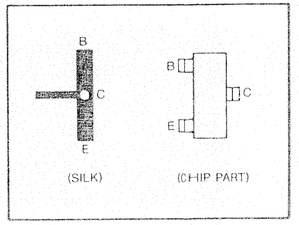

B
C
E
B
C
E
(SILK)
(CHIP PART)

AUDIO VR P.C.BOARD

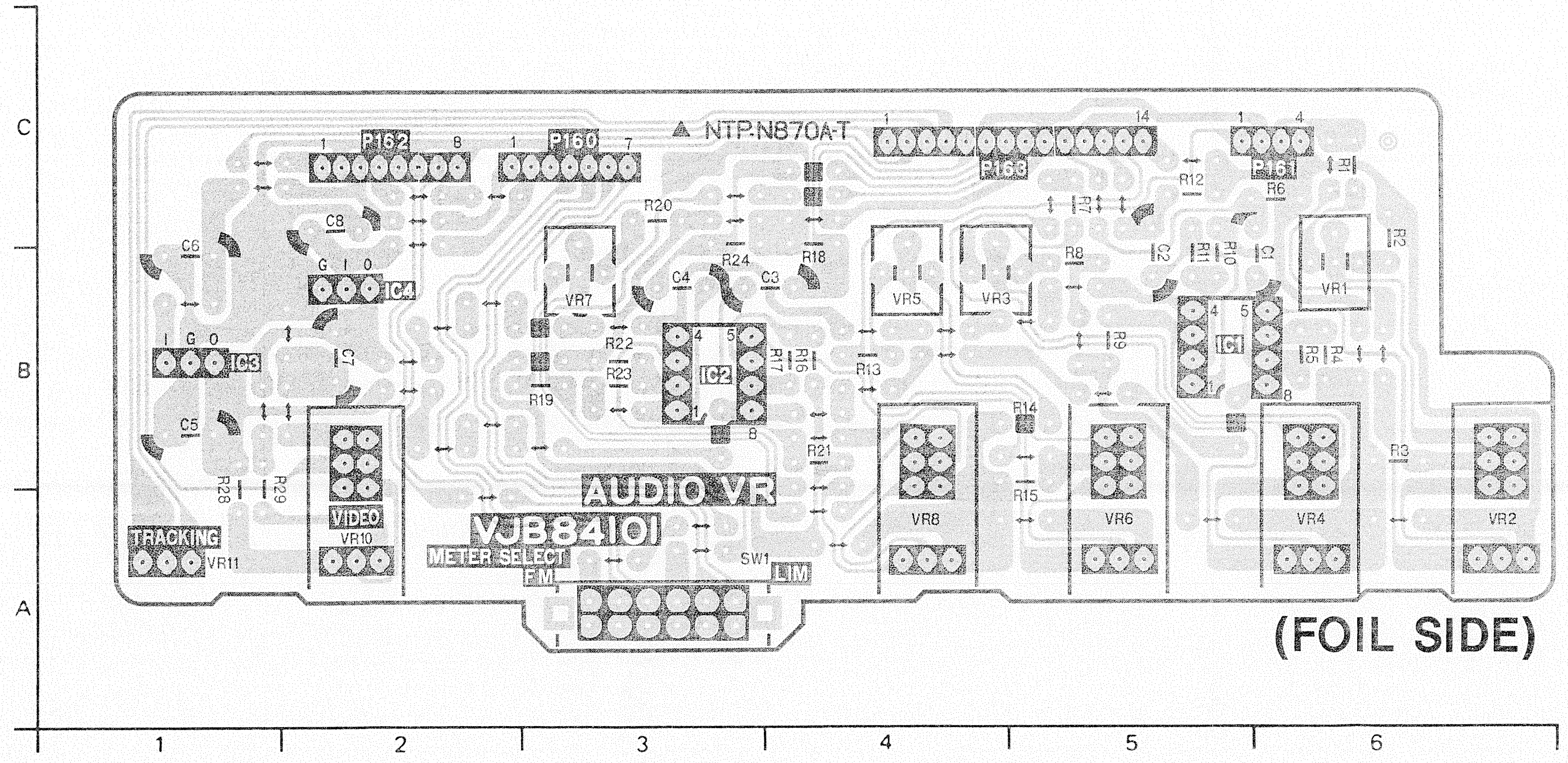

C
B
A
1
2
3
4
5
6
NTP-N870A-T
P162
P160
P163
P161
IC1
IC2
IC3
IC4
VR1
VR2
VR3
VR4
VR5
VR6
VR7
VR8
VR10
VR11
TRACKING
VIDEO
AUDIO VR
VJB84101
METER SELECT
F.M.
LIM
SW1

(FOIL SIDE)

AUDIO VR			
FOIL SIDE		VR7	B-3
INTEGRATED CIRCUIT		VR8	A-4
IC1	B-5	VR10	A-2
IC2	B-3	VR11	A-1
IC3	B-2		
IC4	B-1	CONNECTOR	
ADJUSTMENT		P160	C-3
VR1	B-6	P161	C-6
VR2	A-6	P162	C-2
VR3	B-4	P163	C-4
VR4	A-6		
VR5	B-4		
VR6	A-5		

ADDRESS INFORMATION

FRONT MODE

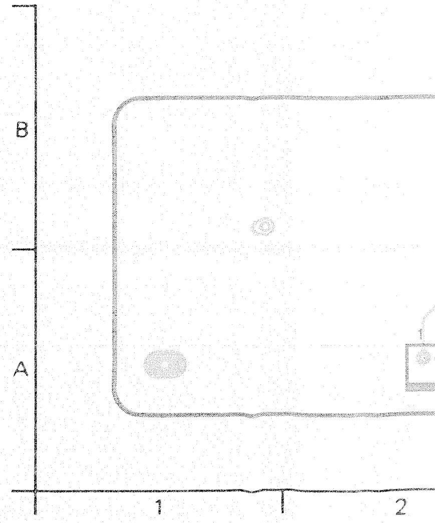

	B-3
	A-4
	B-3
	A-3
	B-2
	A-2
	B-1
	A-1
	B-5
NNECTOR	
	C-6
	C-5
	C-3
	B-2
	B-3
	C-2
	C-1

	B-3
	A-4
	A-2
	A-1
NNECTOR	
	C-3
	C-6
	C-2
	C-4

TYPE \ MODEL	AU-665	AU-65	AU-63
NTSC	VEP80422B	VEP80422B	VEP80422B
PAL	VEP80422A	VEP80422B	VEP80422B

EJECT INTER P.C.BOARD

(FOI

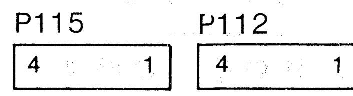

P115
4
1
P112
4
1

AUDIO INPUT SW P.C.BOARD

TYPE \ MODEL	AU-665	AU-65	AU-63	AU-62
NTSC	VEP84103B	Not Used	Not Used	Not Used
PAL	VEP84103A	Not Used	Not Used	Not Used

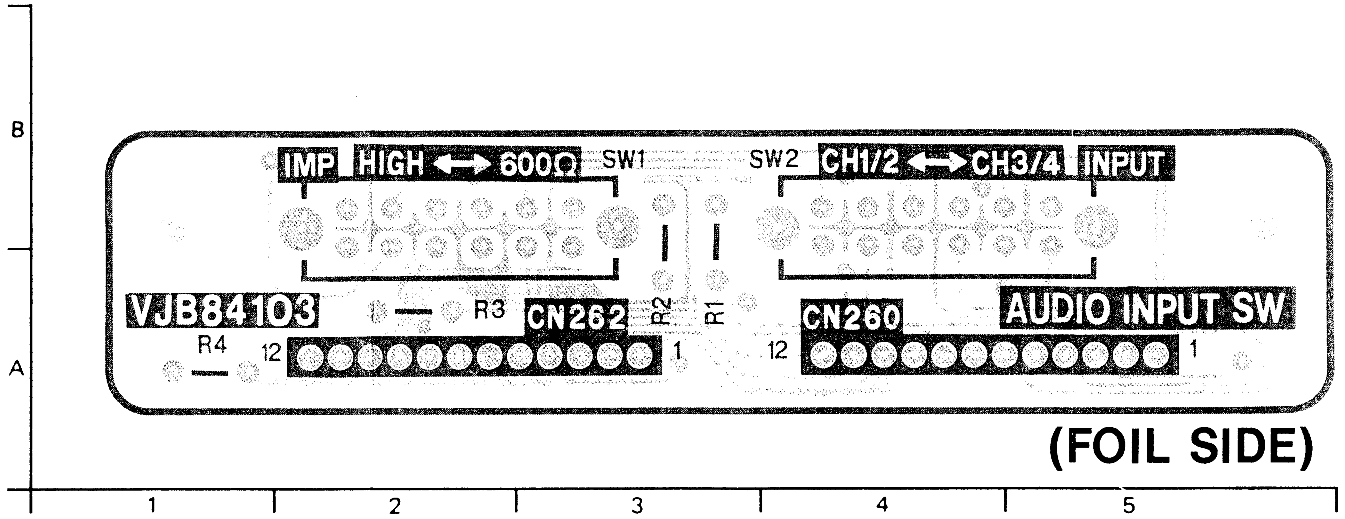

B
A
IMP
HIGH ↔ 600Ω
SW1
SW2
CH1/2 ↔ CH3/4
INPUT
VJB84103
R3
CN262
R2
R1
CN260
AUDIO INPUT SW
R4
12
1
12
1
1
2
3
4
5

(FOIL SIDE)

AUDIO OUTPUT SW	
FOIL SIDE	
CONNECTOR	
CN260	A-3
CN262	A-4

ADDRESS INFORMATION

TYPE \ MODEL	AU-665	AU-65	AU-63	VE
NTSC	VEP00E30A	VEP00E30A	VEP00E30A	VE
PAL	VEP00E30A	VEP00E30A	VEP00E30A	VE

CASSETTE DETECT P.C.BOARD
(FOIL SIDE)

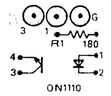

3
1
G
R1
180
4
1
3
2
ON1110

CHIP PART INFORMATION

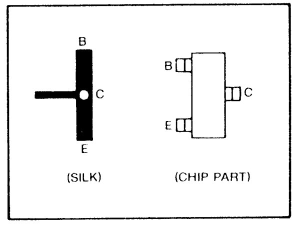

B
C
E
(SILK)
B
C
E
(CHIP PART)

FRONT MODE SELECT CIRCUIT			
FOIL SIDE		CONNECTOR	
TRANSISTOR		CN180	A-2
Q1	A-4	CN181	A-11
Q2	A-4	P153	A-10
Q3	B-9	P155	A-9
Q4	A-11		
INTEGRATED CIRCUIT			
IC1	B-10		

ADDRESS INFORMATION

FRONT MODE SELECT CIRCUIT P.C.BOARD

TYPE \ MODEL	AU-665	AU-65	AU-63	AU-62
NTSC	VEP80559B	VEP80559A	VEP80559D	VEP80559C
PAL	VEP80559B	VEP80559A	VEP80559D	VEP80559C

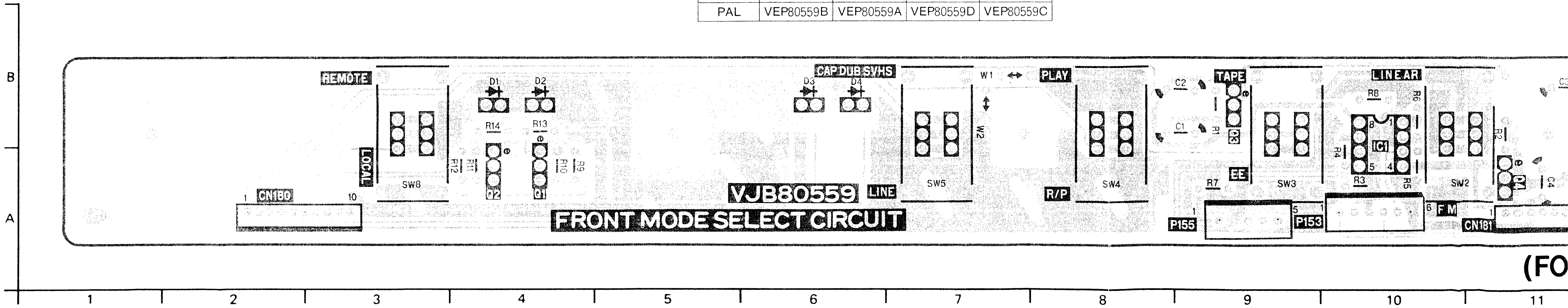

B
A
REMOTE
D1
D2
R14
R13
LOCAL
SW8
R12
R11
Q2
Q1
R10
R9
1
CN180
10
CAP DUB SVHS
D3
D4
VJB80559
LINE
FRONT MODE SELECT CIRCUIT
W1
PLAY
W2
SW5
R/P
SW4
C2
TAPE
C1
R1
Q3
EE
R7
SW3
P155
1
5
1
P153
LINEAR
R8
R6
IC1
8
1
5
4
R4
R3
R5
6
F M
SW2
R2
Q4
C4
1
CN181
1
2
3
4
5
6
7
8
9
10
11

(FO

-62
Jsed
Jsed

AUDIO OUTPUT SW	
FOIL SIDE	
CONNECTOR	
CN260	A-3
CN262	A-4

ADDRESS INFORMATION

MODE SELECT CIRCUIT		
IDE	CONNECTOR	
TOR	CN180	A-2
A-4	CN181	A-11
A-4	P153	A-10
B-9	P155	A-9
A-11		
CIRCUIT		
B-10		

FORMATION

	AU-665	AU-65	AU-63	AU-62
	EP80559B	VEP80559A	VEP80559D	VEP80559C
	EP80559B	VEP80559A	VEP80559D	VEP80559C

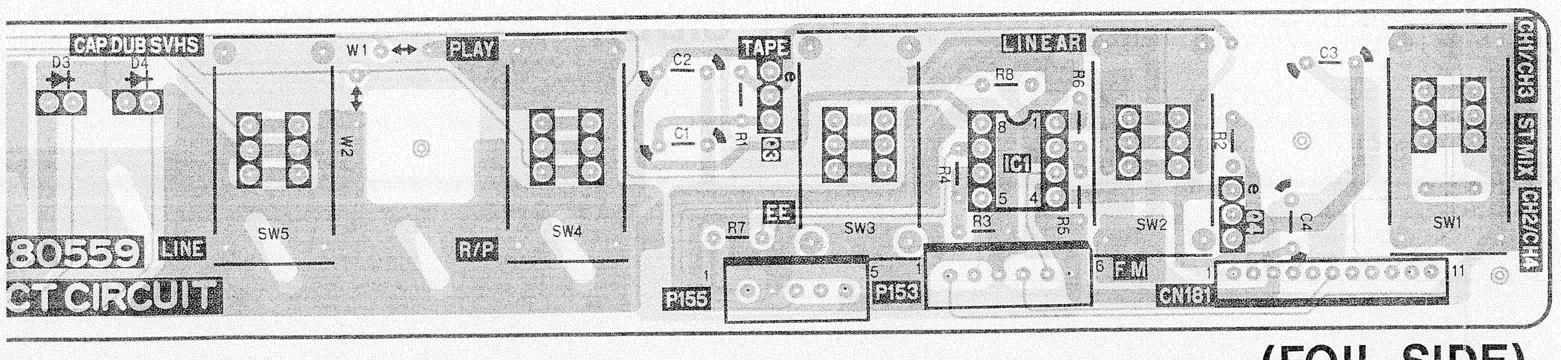

CAP DUB SVHS
D3
D4
W1
PLAY
TAPE
C2
C1
R1
Q1
LINEAR
R8
R6
IC1
R4
R3
R5
EE
R7
W2
SW5
SW4
SW3
SW2
SW1
R2
C3
C4
Q2
80559
LINE
R/P
CT CIRCUIT
P155
P153
FM
CN181
CH1/CH3
STMIX
CH2/CH4

(FOIL SIDE)

6 7 8 9 10 11 12

MODEL / TYPE	AU-665	AU-65	AU-63	AU-62
NTSC	VEP80422B	VEP80422B	VEP80422B	VEP80422B
PAL	VEP80422A	VEP80422B	VEP80422B	VEP80422B

EJECT INTER P.C.BOARD

(FOIL SIDE)

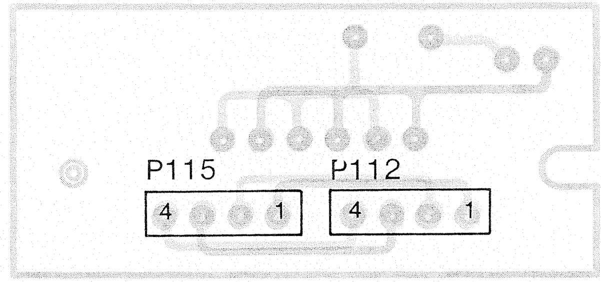

P115
P112
4
1
4
1

MODEL / TYPE	AU-665	AU-65	AU-63	AU-62
NTSC	VEP00E30A	VEP00E30A	VEP00E30A	VEP00E30A
PAL	VEP00E30A	VEP00E30A	VEP00E30A	VEP00E30A

CASSETTE DETECT P.C.BOARD

(FOIL SIDE)

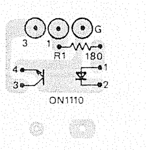

3
1
G
R1 180
4
3
1
2
CN1110

MODEL / TYPE	AU-665	AU-65	AU-63	AU-62
NTSC	VEP00E08C	VEP00E08C	VEP00E08C	VEP00E08C
PAL	VEP00E08C	VEP00E08C	VEP00E08C	VEP00E08C

AUTO OFF LED P.C.BOARD

(FOIL SIDE)

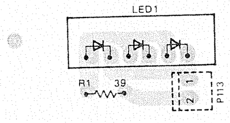

LED1
R1 39
P113

MODEL / TYPE	AU-665	AU-65	AU-63	AU-62
NTSC	VEP80232A	VEP80232A	VEP80232A	VEP80232A
PAL	VEP80232A	VEP80232A	VEP80232A	VEP80232A

EJECT SW P.C.BOARD

(FOIL SIDE)

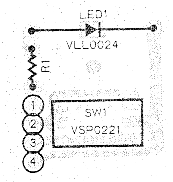

LED1
VLL0024
R1
SW1
VSP0221
1
2
3
4

AUDIO VR P.C.BOARD
FRONT MODE SELECT P.C.BOA

P.C. Board Location

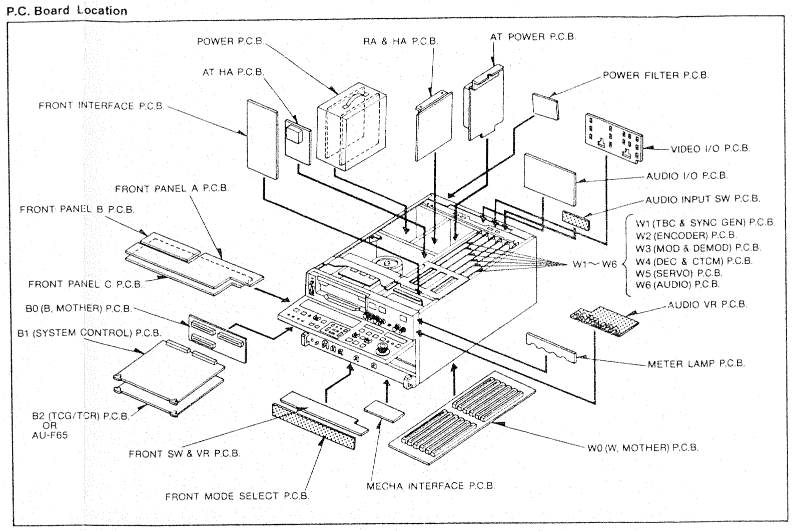

POWER P.C.B.
RA & HA P.C.B.
AT POWER P.C.B.
AT HA P.C.B.
POWER FILTER P.C.B.
FRONT INTERFACE P.C.B.
VIDEO I/O P.C.B.
AUDIO I/O P.C.B.
FRONT PANEL A P.C.B.
AUDIO INPUT SW P.C.B.
FRONT PANEL B P.C.B.
W1 (TBC & SYNC GEN) P.C.B.
W2 (ENCODER) P.C.B.
W3 (MOD & DEMOD) P.C.B.
W4 (DEC & CTCM) P.C.B.
W5 (SERVO) P.C.B.
W6 (AUDIO) P.C.B.
W1～W6
FRONT PANEL C P.C.B.
B0 (B. MOTHER) P.C.B.
AUDIO VR P.C.B.
B1 (SYSTEM CONTROL) P.C.B.
METER LAMP P.C.B.
B2 (TCG/TCR) P.C.B.
OR
AU-F65
W0 (W. MOTHER) P.C.B.
FRONT SW & VR P.C.B.
MECHA INTERFACE P.C.B.
FRONT MODE SELECT P.C.B.

MODEL / TYPE	AU-665	AU-65	AU-63	AU-62
NTSC	VEP00E72A	VEP00E72A	VEP00E72A	VEP00E72A
PAL	VEP00E72A	VEP00E72A	VEP00E72A	VEP00E72A

CASSETTE CARRIAGE LAMP P.C.BOARD

(FOIL SIDE)

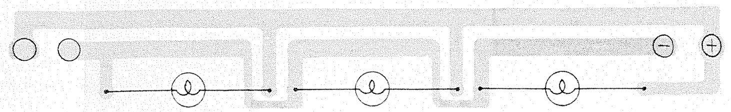

REVERSE SIDE
FRONT INTERFACE P.C.BOARD

FRONT INTERFACE P.C.BOARD)

MODEL / TYPE	AU-665	AU-65	AU-63	AU-62
NTSC	VEP80612A	See Next Page		
PAL	———			

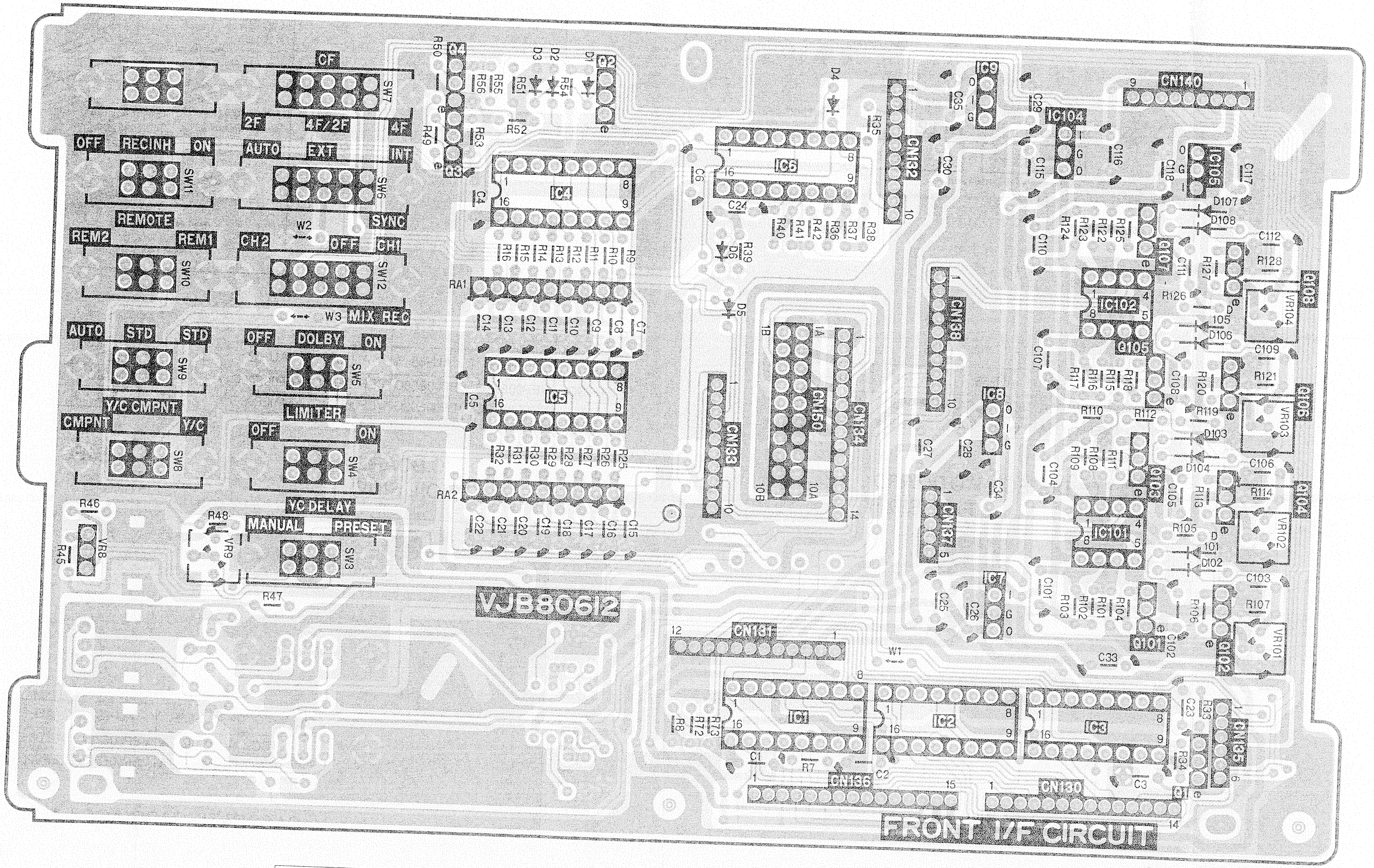

G
F
E
D
C
B
A
1
2
3
4
5
6
7
8
9
CF
SW7
2F
4F/2F
4F
OFF
RECINH
ON
SW11
AUTO
EXT
INT
SW6
SYNC
REMOTE
REM2
REM1
SW10
CH2
W2
OFF
CH1
SW12
W3
MIX REC
AUTO
STD
STD
SW9
OFF
DOLBY
ON
SW5
Y/C CMPNT
CMPNT
Y/C
SW8
LIMITER
OFF
ON
SW4
YC DELAY
MANUAL
PRESET
SW3
R46
R45
VR8
R48
VR9
R47
IC4
IC5
IC6
IC1
IC2
IC3
IC7
IC8
IC9
IC101
IC102
IC104
IC105
RA1
RA2
CN130
CN131
CN132
CN133
CN134
CN135
CN136
CN137
CN138
CN140
CN150
Q1
Q2
Q3
Q4
Q101
Q102
Q103
Q104
Q105
Q106
Q107
Q108
VR101
VR102
VR103
VR104
W1
VJB80612
FRONT I/F CIRCUIT

(FOIL SIDE)

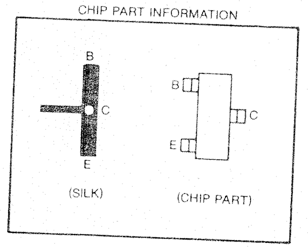

CHIP PART INFORMATION
B
C
E
(SILK)
(CHIP PART)

FLONT INTERFACE									
FOIL SIDE		Q106	E-8	IC8	E-7	VR103	E-9	CN138	E-6
TRANSISTOR		Q107	F-8	IC9	G-7	VR104	F-9	CN140	G-8
Q1	C-8	Q108	F-8	IC101	D-8	CONNECTOR		CN150	E-6
Q2	G-4	INTEGRATED CIRCUIT		IC102	F-8	CN130	C-7		
Q3	G-3	IC1	C-6	IC104	G-7	CN131	C-5		
Q4	G-3	IC2	C-7	IC105	G-8	CN132	G-6		
Q101	D-8	IC3	C-8	ADJUSTMENT		CN133	E-5		
Q102	D-8	IC4	F-4	VR8	D-1	CN134	E-6		
Q103	E-8	IC5	E-4	VR9	D-2	CN135	C-8		
Q104	E-8	IC6	F-5	VR101	D-9	CN136	C-6		
Q105	E-8	IC7	D-7	VR102	D-9	CN137	D-7		

ADDRESS INFORMATION

FRONT INTERFACE P.C.BOARD

MODEL / TYPE	AU-665	AU-65	AU-63	AU-62
NTSC	See Front Page	VEP80553A	VEP80553C	VEP80553B
PAL	———	VEP80631A	VEP80631B	VEP80631C

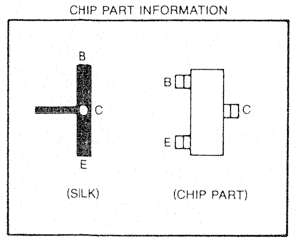
CHIP PART INFORMATION
B
C
E
B
C
E
(SILK)
(CHIP PART)

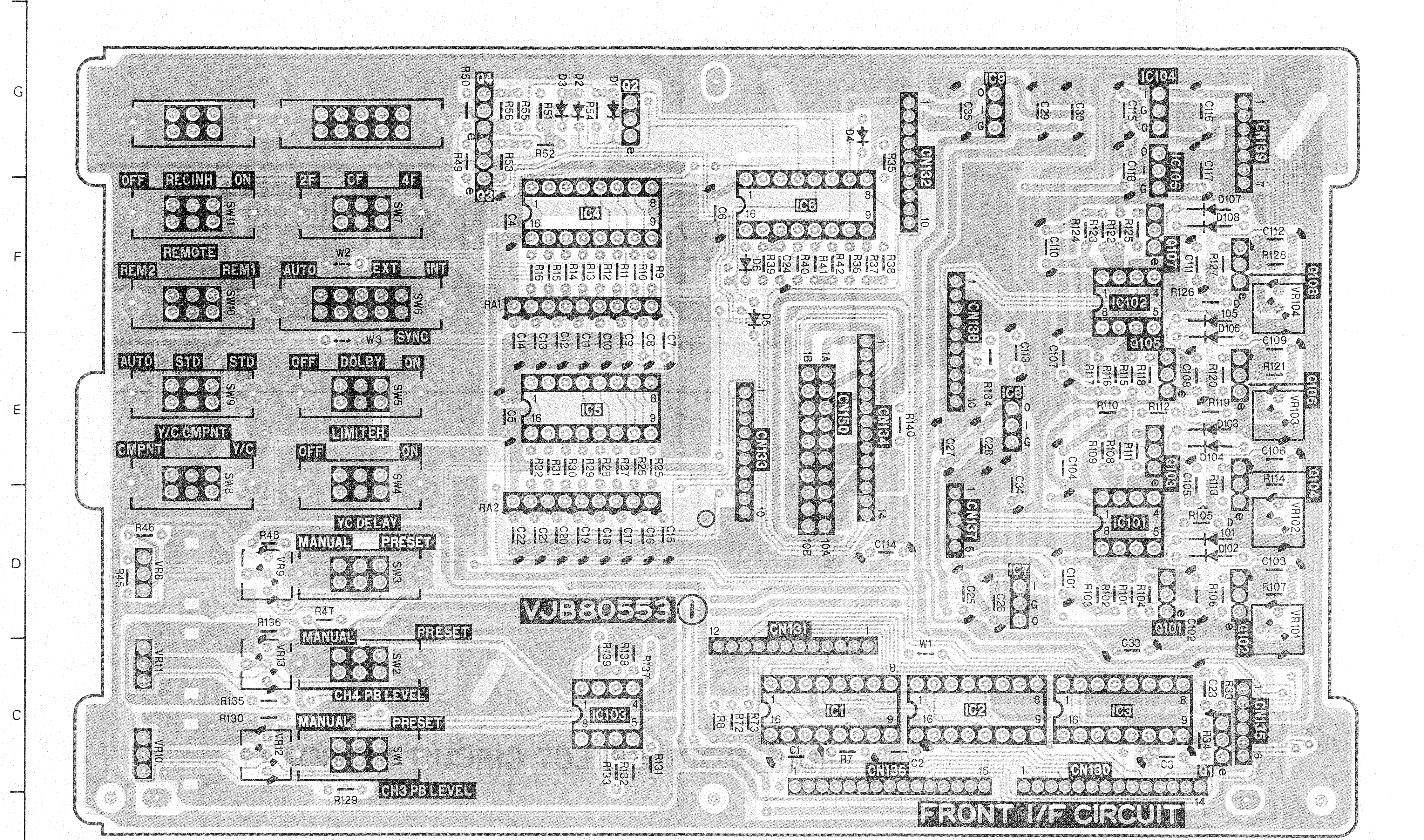
G
F
E
D
C
B
OFF
RECINH
ON
SW11
REMOTE
REM2
REM1
SW10
AUTO
STD
STD
SW9
Y/C CMPNT
CMPNT
Y/C
SW8
2F
CF
4F
SW7
AUTO
W2
EXT
INT
SW6
W3
SYNC
OFF
DOLBY
ON
SW5
LIMITER
OFF
ON
SW4
YC DELAY
MANUAL
PRESET
SW3
MANUAL
PRESET
SW2
CH4 PB LEVEL
MANUAL
PRESET
SW1
CH3 PB LEVEL
VR8
VR9
VR10
VR11
VR12
VR13
IC1
IC2
IC3
IC4
IC5
IC6
IC7
IC8
IC9
IC101
IC102
IC103
IC104
IC105
Q1
Q2
Q3
Q4
Q101
Q102
Q103
Q104
Q105
Q106
Q107
Q108
VR101
VR102
VR103
VR104
CN130
CN131
CN132
CN133
CN134
CN135
CN136
CN137
CN138
CN139
CN150
RA1
RA2
W1
VJB80553
FRONT I/F CIRCUIT

(FOIL SIDE)

FRONT INTERFACE									
FOIL SIDE		Q106	E-8	IC8	E-7	VR11	C-1	CN133	E-5
TRANSISTOR		Q107	F-8	IC9	G-7	VR12	C-2	CN134	E-6
Q1	C-8	Q108	F-8	IC101	D-8	VR13	C-2	CN135	C-8
Q2	G-4	INTEGRATED CIRCUIT		IC102	F-8	VR101	D-9	CN136	C-6
Q3	G-3	IC1	C-6	IC103	C-4	VR102	D-9	CN137	D-6
Q4	G-3	IC2	C-7	IC104	G-8	VR103	E-9	CN138	E-6
Q101	D-8	IC3	C-8	IC105	G-8	VR104	F-9	CN139	G-8
Q102	D-8	IC4	F-4	ADJUSTMENT		CONNECTOR		CN150	E-6
Q103	E-8	IC5	E-4	VR8	D-1	CN130	C-7		
Q104	E-8	IC6	F-5	VR9	D-2	CN131	C-5		
Q105	E-8	IC7	D-7	VR10	C-1	CN132	G-6		

ADDRESS INFORMATION

A

1 2 3 4 5 6 7 8 9

65	AU-65	AU-63	AU-62
Page	VEP80553A	VEP80553C	VEP80553B
—	VEP80631A	VEP80631B	VEP80631C

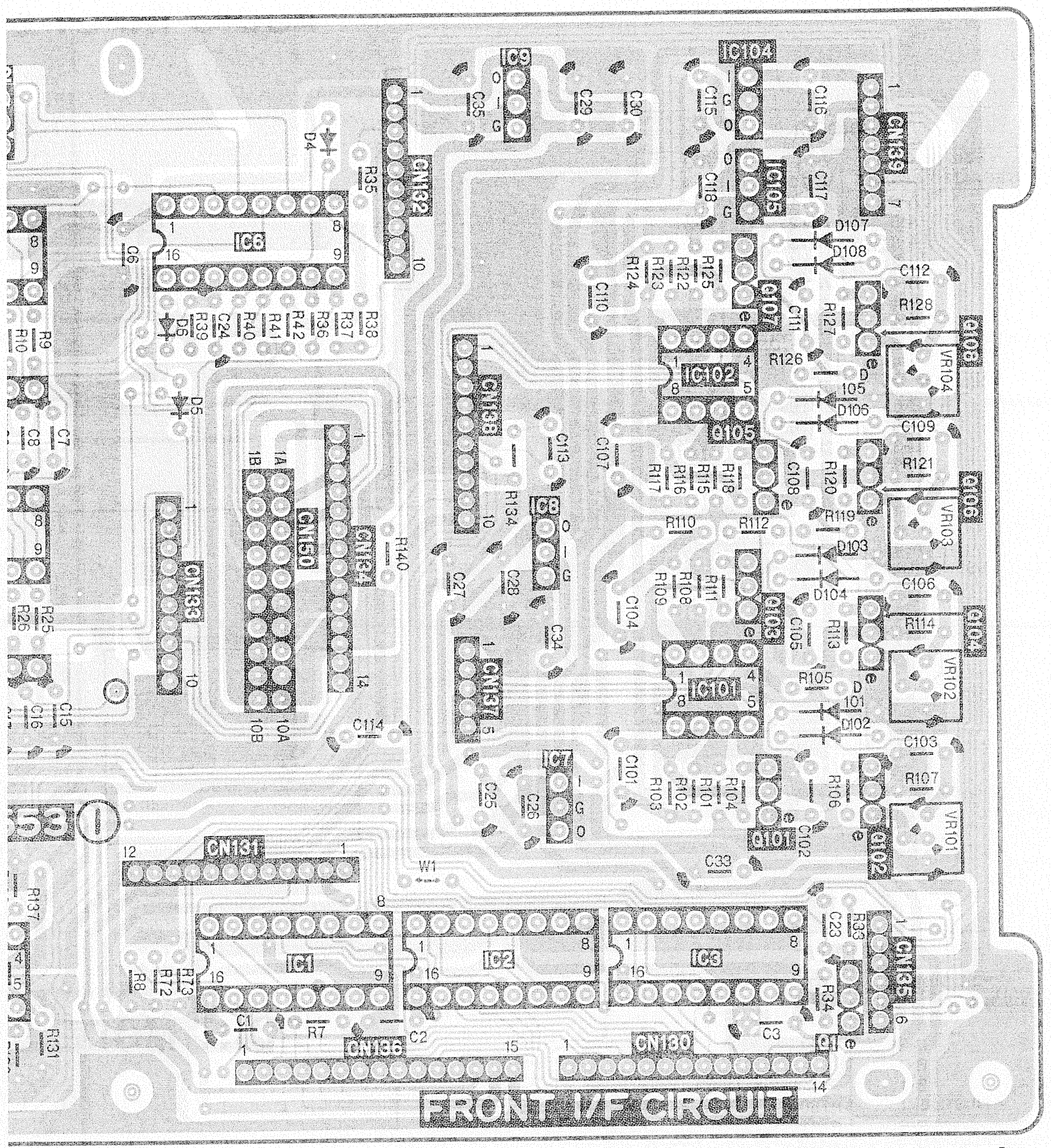
IC9
IC104
C35
C29
C30
C115
C116
CN139
D4
R35
CN132
IC105
C118
C117
IC6
C6
D107
D108
C112
R124
R123
R122
R125
C110
Q107
C111
R127
R128
D6
C24
R39
R40
R41
R42
R36
R37
R38
R9
R10
IC102
R126
Q108
VR104
D105
D106
D5
C7
C8
CN138
C113
C107
Q105
R117
R116
R115
R118
C108
R120
C109
R121
Q106
VR103
CN150
CN134
CN133
R134
IC8
R110
R112
R119
D103
R140
C27
C28
R109
R108
R111
D104
C106
R25
R26
C104
Q103
C105
R113
R114
Q104
VR102
C34
IC101
R105
CN137
D101
D102
C114
C15
C16
C103
IC7
C101
R102
R101
R104
R103
R106
R107
C25
C26
Q101
C102
Q102
VR101
C33
W1
CN131
R137
C23
R33
R34
CN135
IC1
IC2
IC3
R8
R72
R73
C1
R7
CN136
C2
CN130
C3
R131
FRONT I/F CIRCUIT

(FOIL SIDE)

FRONT INTERFACE					
IC8	E-7	VR11	C-1	CN133	E-5
IC9	G-7	VR12	C-2	CN134	E-6
IC101	D-8	VR13	C-2	CN135	C-8
IC102	F-8	VR101	D-9	CN136	C-6
IC103	C-4	VR102	D-9	CN137	D-6
IC104	G-8	VR103	E-9	CN138	E-6
IC105	G-8	VR104	F-9	CN139	G-8
ADJUSTMENT		CONNECTOR		CN150	E-6
VR8	D-1	CN130	C-7		
VR9	D-2	CN131	C-5		
VR10	C-1	CN132	G-6		

5 6 7 8 9

P.C. Board Location

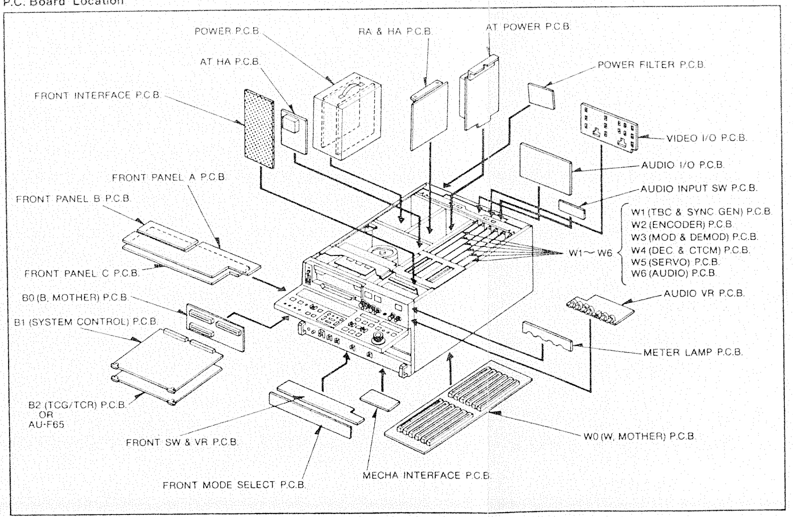
POWER P.C.B.
RA & HA P.C.B.
AT POWER P.C.B.
AT HA P.C.B.
POWER FILTER P.C.B.
FRONT INTERFACE P.C.B.
VIDEO I/O P.C.B.
AUDIO I/O P.C.B.
FRONT PANEL A P.C.B.
AUDIO INPUT SW P.C.B.
FRONT PANEL B P.C.B.
W1 (TBC & SYNC GEN) P.C.B.
W2 (ENCODER) P.C.B.
W3 (MOD & DEMOD) P.C.B.
W4 (DEC & CTCM) P.C.B.
W5 (SERVO) P.C.B.
W6 (AUDIO) P.C.B.
W1 ~ W6
FRONT PANEL C P.C.B.
B0 (B. MOTHER) P.C.B.
AUDIO VR P.C.B.
B1 (SYSTEM CONTROL) P.C.B.
METER LAMP P.C.B.
B2 (TCG/TCR) P.C.B.
OR
AU-F65
FRONT SW & VR P.C.B.
W0 (W. MOTHER) P.C.B.
FRONT MODE SELECT P.C.B.
MECHA INTERFACE P.C.B.

FRONT PANEL A P.C.BOARD

MODEL / TYPE	AU-665	AU-65	AU-63	AU-62
NTSC	VEP66052C	See Next Page		
PAL	———			

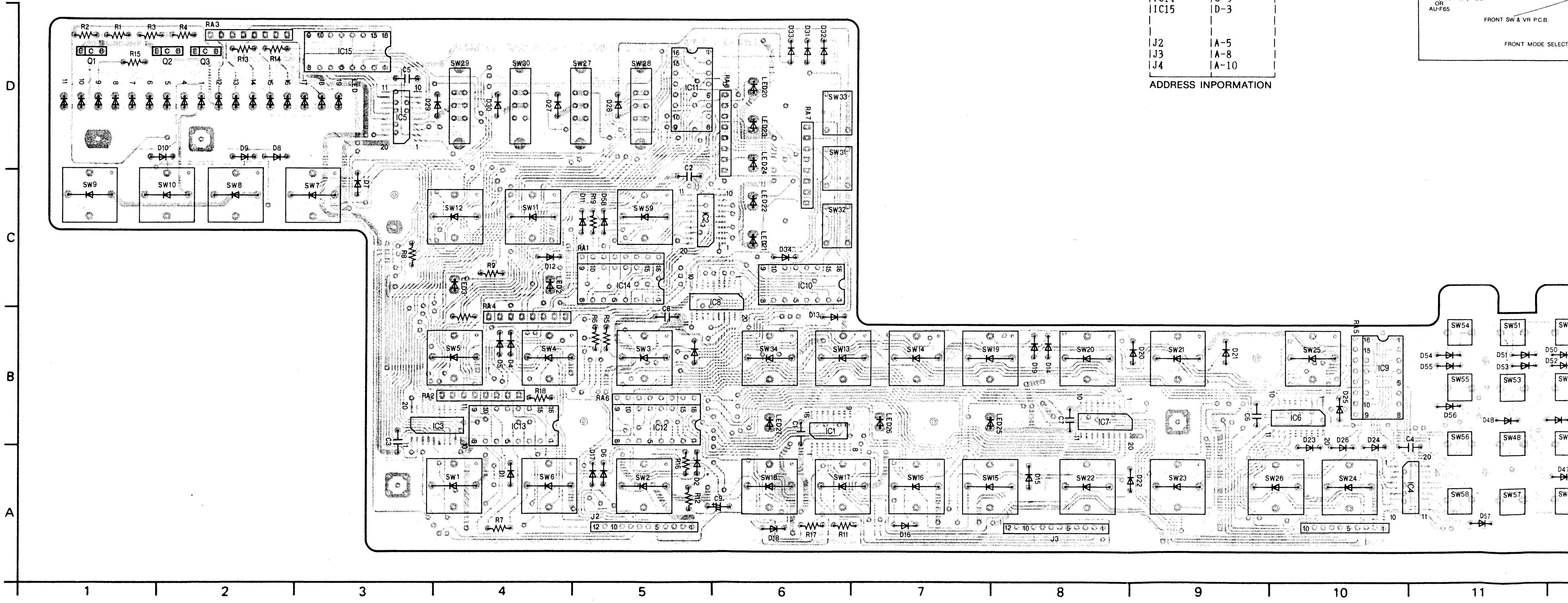

R2
R1
R3
R4
RA3
Q1
Q2
Q3
R15
R13
R14
IC15
C5
IC5
D29
D30
D27
D28
SW29
SW30
SW27
SW28
IC11
RA8
LED20
LED21
LED24
LED22
LED23
D33
D31
D32
RA7
SW33
SW31
SW32
D10
D9
D8
SW9
SW10
SW8
SW7
D7
SW12
SW11
SW59
D11
R19
D58
C2
IC2
RA1
IC14
D34
IC10
R8
R9
D12
LED3
LED2
RA4
C8
IC8
D13
R6
R5
SW5
SW4
SW3
SW34
SW13
SW14
SW19
SW20
SW21
SW25
RA5
IC9
D5
D4
D19
D14
D20
D21
D54
D55
D51
D53
D50
D52
SW54
SW51
SW55
SW53
D56
D48
SW56
SW48
RA2
R18
RA6
IC3
IC13
IC12
C3
LED27
C1
IC1
LED26
LED25
C7
IC7
C6
IC6
D25
D23
D26
D24
C4
IC4
SW1
SW6
SW2
SW18
SW17
SW16
SW15
SW22
SW23
SW26
SW24
D1
D17
D6
R16
D2
R12
C9
D15
D22
R7
J2
D18
R17
R11
D16
J3
SW58
SW57
D57
D
C
B
A
1
2
3
4
5
6
7
8
9
10
11

FRONT PANEL(A) P.C.BOARD

Q1	D-1
Q2	D-2
Q3	D-2
IC1	B-6
IC2	C-5
IC3	B-4
IC4	A-11
IC5	D-3
IC6	B-10
IC7	B-8
IC8	C-6
IC9	B-10
IC10	C-6
IC11	D-5
IC12	B-5
IC13	B-4
IC14	C-5
IC15	D-3
J2	A-5
J3	A-8
J4	A-10

ADDRESS INPORMATION

P.C. Board Location

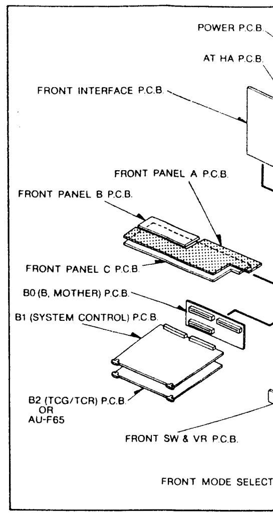

POWER P.C.B.
AT HA P.C.B.
FRONT INTERFACE P.C.B.
FRONT PANEL A P.C.B.
FRONT PANEL B P.C.B.
FRONT PANEL C P.C.B.
B0 (B, MOTHER) P.C.B.
B1 (SYSTEM CONTROL) P.C.B.
B2 (TCG/TCR) P.C.B.
OR
AU-F65
FRONT SW & VR P.C.B.
FRONT MODE SELECT

P.C. Board Location

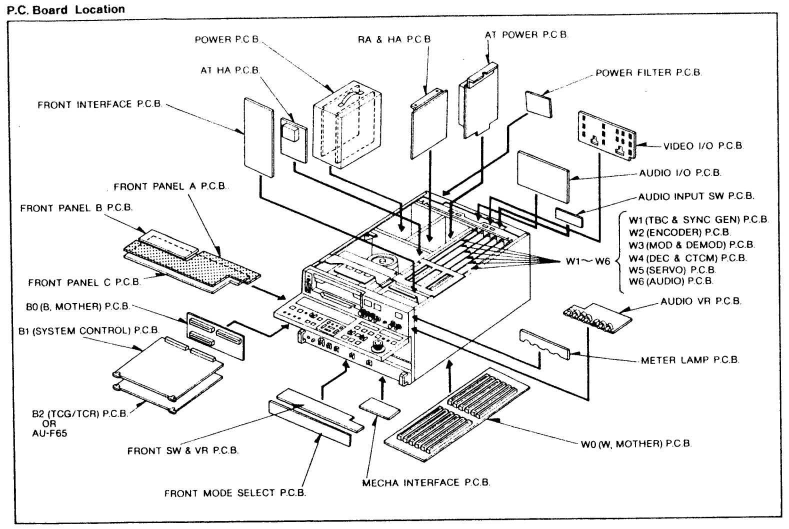
POWER P.C.B.
RA & HA P.C.B.
AT POWER P.C.B.
AT HA P.C.B.
POWER FILTER P.C.B.
FRONT INTERFACE P.C.B.
VIDEO I/O P.C.B.
AUDIO I/O P.C.B.
FRONT PANEL A P.C.B.
AUDIO INPUT SW P.C.B.
FRONT PANEL B P.C.B.
W1 (TBC & SYNC GEN) P.C.B.
W2 (ENCODER) P.C.B.
W3 (MOD & DEMOD) P.C.B.
W4 (DEC & CTCM) P.C.B.
W5 (SERVO) P.C.B.
W6 (AUDIO) P.C.B.
W1~W6
FRONT PANEL C P.C.B.
B0 (B, MOTHER) P.C.B.
AUDIO VR P.C.B.
B1 (SYSTEM CONTROL) P.C.B.
METER LAMP P.C.B.
B2 (TCG/TCR) P.C.B.
OR
AU-F65
FRONT SW & VR P.C.B.
W0 (W, MOTHER) P.C.B.
MECHA INTERFACE P.C.B.
FRONT MODE SELECT P.C.B.

(FOIL SIDE)

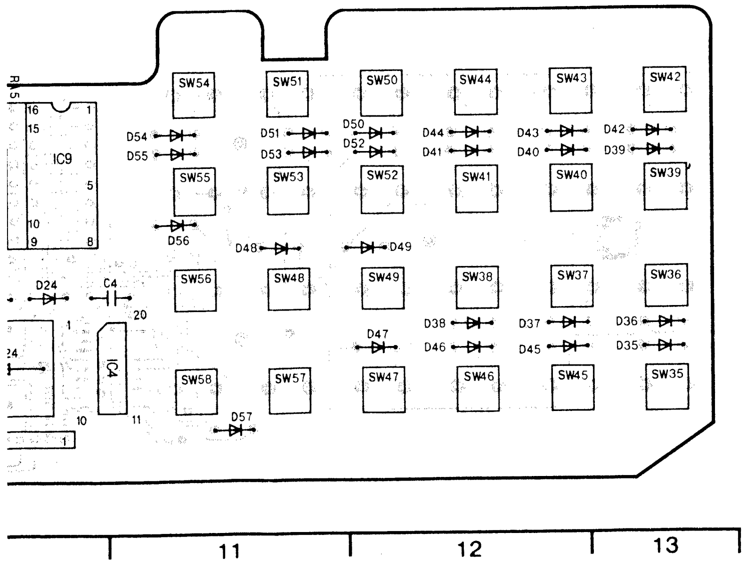
IC9
IC4
SW54
SW51
SW50
SW44
SW43
SW42
SW55
SW53
SW52
SW41
SW40
SW39
SW56
SW48
SW49
SW38
SW37
SW36
SW58
SW57
SW47
SW46
SW45
SW35
D54
D55
D56
D51
D53
D50
D52
D44
D41
D43
D40
D42
D39
D48
D49
D24
C4
D47
D38
D46
D37
D45
D36
D35
D57
11
12
13

FRONT PANEL A P.C.BOARD

MODEL TYPE	AU-665	AU-65	AU-63	AU-62
NTSC	See Front Page	VEP86050C	See Next Page	
PAL	———	VEP86050D		

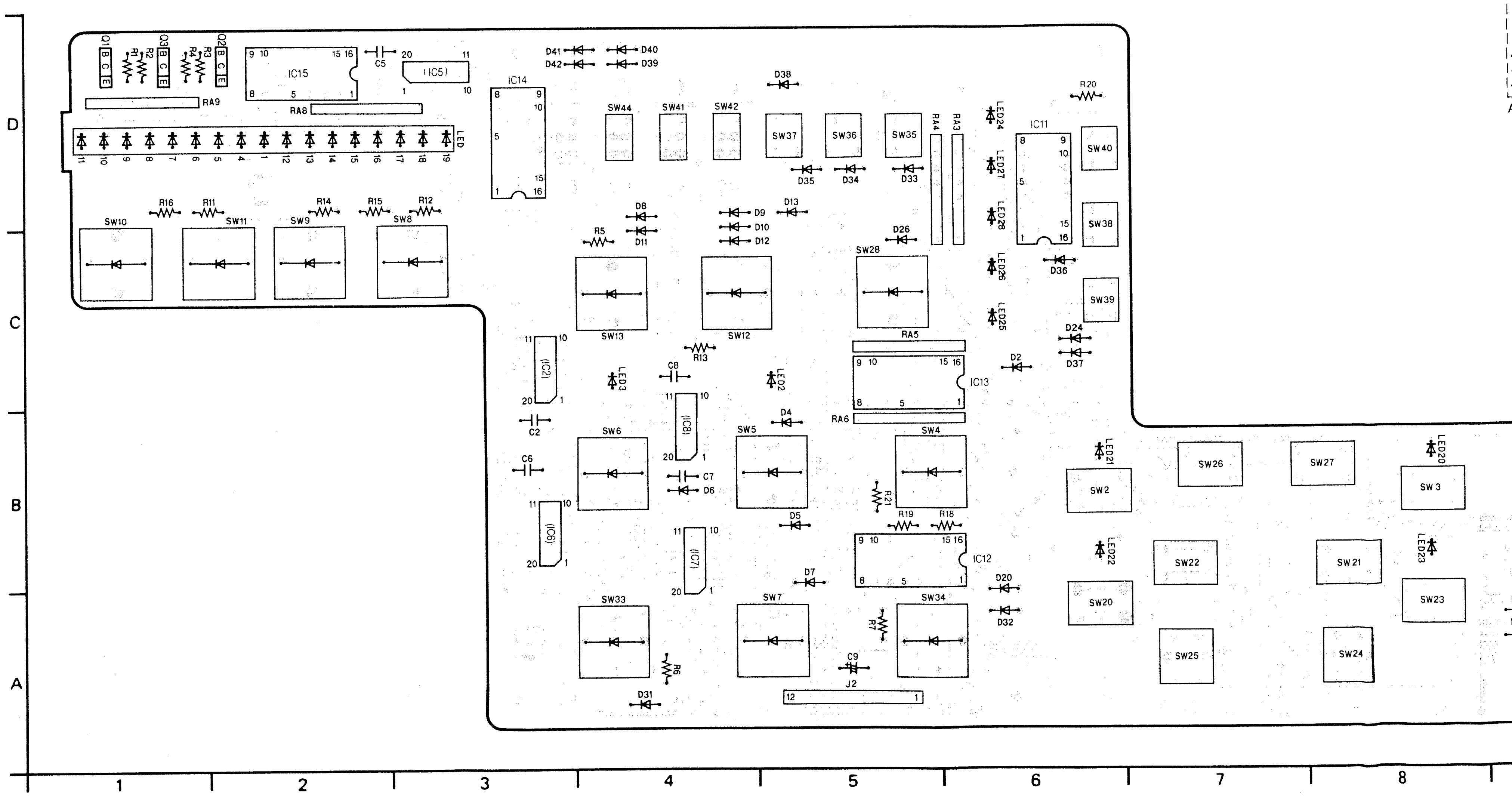
D
C
B
A
1
2
3
4
5
6
7
8
Q1
Q3
Q2
B C E
R1
R2
R3
R4
IC15
C5
IC5
RA9
RA8
LED
IC14
D41
D42
D40
D39
D38
SW44
SW41
SW42
SW37
SW36
SW35
RA4
RA3
LED24
LED27
LED28
LED26
LED25
IC11
R20
SW40
SW38
SW39
D35
D34
D33
D36
R16
R11
R14
R15
R12
SW10
SW11
SW9
SW8
D8
D11
R5
D9
D10
D12
D13
D26
SW28
SW13
SW12
RA5
IC2
C2
C8
R13
LED3
LED2
IC8
D24
D37
D2
IC13
RA6
SW6
SW5
SW4
D4
C6
C7
D6
IC6
IC7
R21
R19
R18
D5
IC12
D7
D20
D32
SW33
SW7
SW34
R7
R6
C9
J2
D31
LED21
SW26
SW27
LED20
SW2
SW3
LED22
SW22
SW21
LED23
SW20
SW23
SW25
SW24

FRO

PANEL A P.C.BOARD

MODEL / TYPE	AU-665	AU-65	AU-63	AU-62
NTSC	See Front Page	VEP86050C	See Next Page	
PAL	———	VEP86050D		

FRONT PANEL(A) P.C.BOARD

Q1	D-1
Q2	D-2
Q3	D-1
IC1	A-10
IC2	C-3
IC3	B-11
IC4	A-11
IC5	D-3
IC6	B-3
IC7	B-4
IC8	B-4
IC9	B-11
IC10	B-10
IC11	D-6
IC12	B-5
IC13	C-5
IC14	D-3
IC15	D-2
J2	A-5
J3	A-10
J4	A-11

ADDRESS INFORMATION

CHIP PART INFORMATION

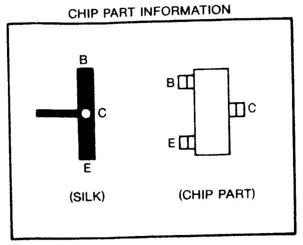
B
C
E
B
C
E
(SILK)
(CHIP PART)

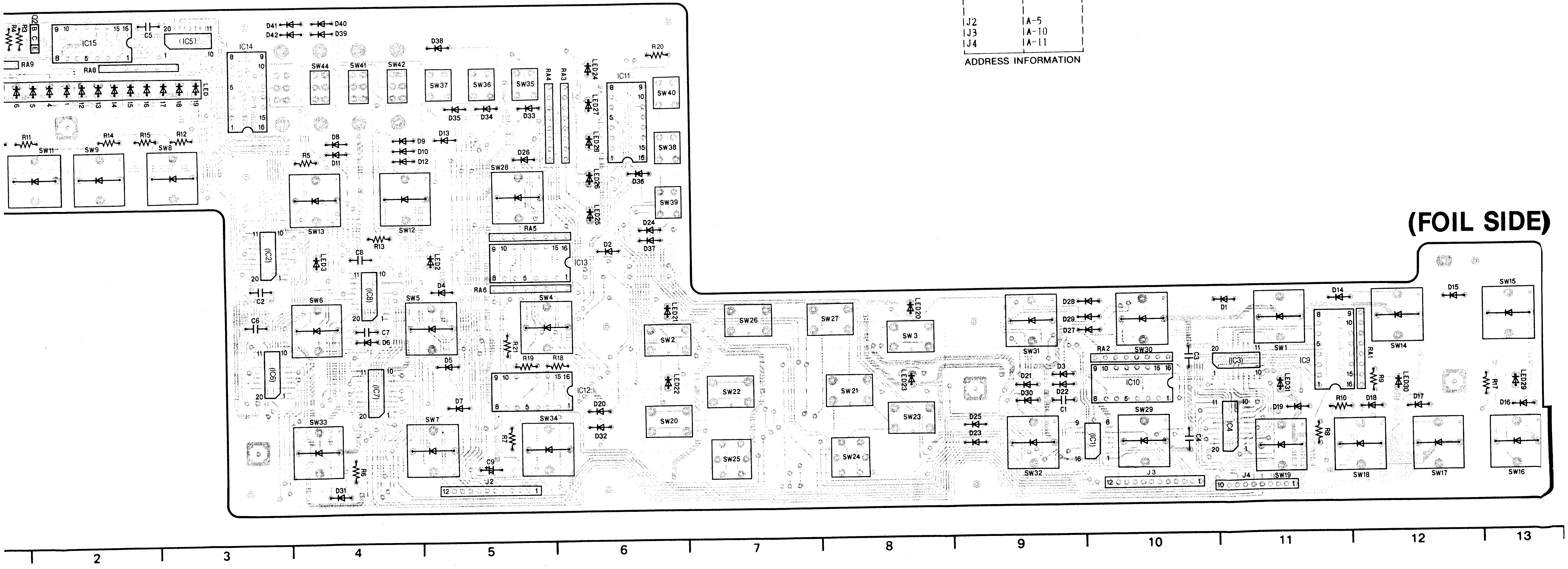
IC15
IC5
IC14
IC11
IC13
IC12
IC10
IC9
IC2
IC8
IC6
IC7
IC3
IC4
IC1
RA1
RA2
RA3
RA4
RA5
RA6
RA8
RA9
SW1
SW2
SW3
SW4
SW5
SW6
SW7
SW8
SW9
SW11
SW12
SW13
SW14
SW15
SW16
SW17
SW18
SW19
SW20
SW21
SW22
SW23
SW24
SW25
SW26
SW27
SW28
SW29
SW30
SW31
SW32
SW33
SW34
SW35
SW36
SW37
SW38
SW39
SW40
SW41
SW42
SW44
J2
J3
J4
LED
LED2
LED3
LED20
LED21
LED22
LED23
LED24
LED25
LED26
LED27
LED28
LED29
LED30
LED31
Q2
R3
R4
R5
R6
R7
R8
R9
R10
R11
R12
R13
R14
R15
R17
R18
R19
R20
R21
C1
C2
C3
C4
C5
C6
C7
C8
C9
D1
D2
D3
D4
D5
D6
D7
D8
D9
D10
D11
D12
D13
D14
D15
D16
D17
D18
D19
D20
D21
D22
D23
D24
D25
D26
D27
D28
D29
D30
D31
D32
D33
D34
D35
D36
D37
D38
D39
D40
D41
D42
2
3
4
5
6
7
8
9
10
11
12
13

(FOIL SIDE)

REVERSE SIDE

FRONT PANEL A P.C.BOARD
FRONT PANEL B P.C.BOARD

FRONT PANEL B P.C.BOARD

MODEL TYPE	AU-665	AU-65	AU-63	AU-62
NTSC	VEP66022A	VEP66022A	See Front Page	
PAL	VEP66022A	VEP66022A		

(FOIL SIDE)

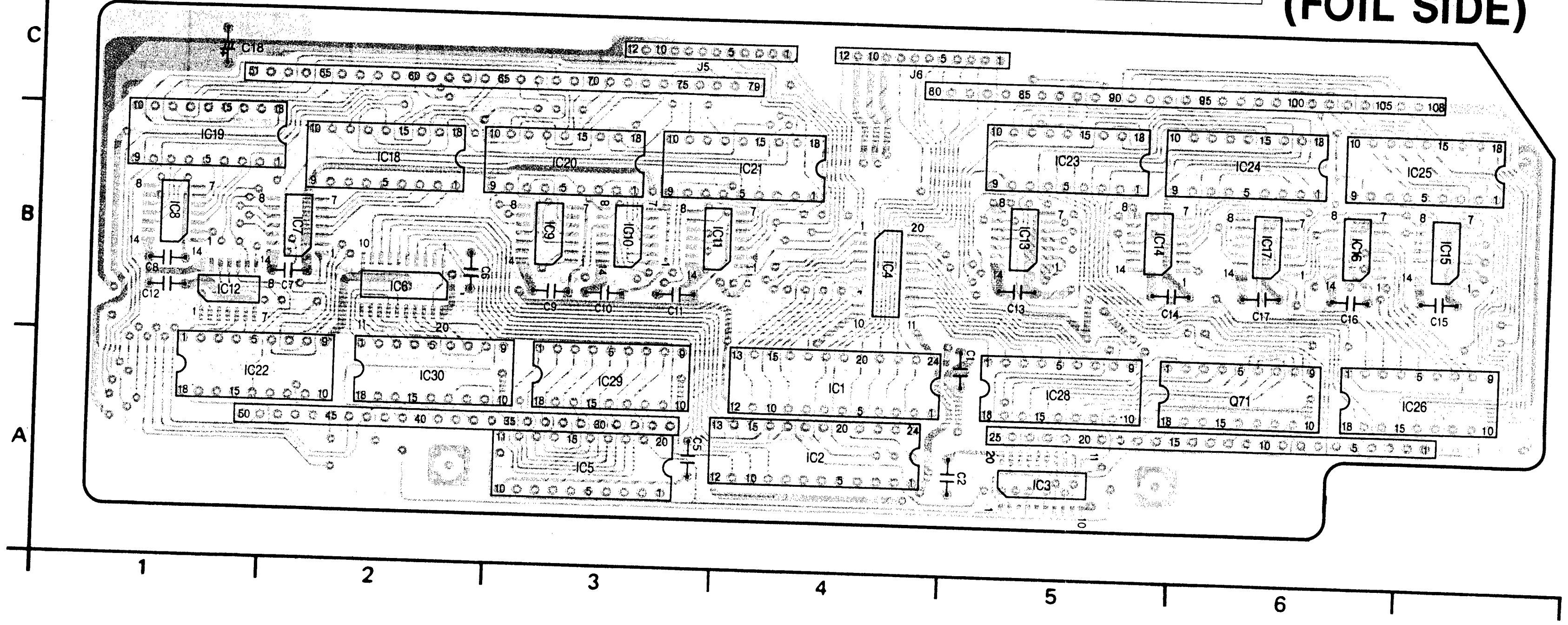
C
B
A
1
2
3
4
5
6
C18
J5
J6
IC19
IC18
IC20
IC21
IC23
IC24
IC25
IC8
IC7
IC9
IC10
IC11
IC4
IC13
IC14
IC17
IC16
IC15
IC12
IC6
C8
C12
C9
C10
C11
C13
C14
C17
C16
C15
IC22
IC30
IC29
IC1
IC28
Q71
IC26
IC5
IC2
IC3
C1
C2
C5

FRONT PANEL(B) P.C.BOARD

IC1	A-4
IC2	A-4
IC3	A-5
IC4	B-4
IC5	A-3
IC6	B-2
IC7	B-2
IC8	B-1
IC9	B-3
IC10	B-3
IC11	B-3
IC12	B-1
IC13	B-5
IC14	B-5
IC15	B-7
IC16	B-6
IC17	B-6
IC18	B-2
IC19	B-1
IC20	B-3
IC21	B-4
IC22	A-1
IC23	B-5
IC24	B-6
IC25	B-7
IC26	A-7
IC28	A-5
IC29	A-3
IC30	A-2
IC71	A-6
J5	C-3
J6	C-4

ADDRESS INFORMATION

P.C. Board Location

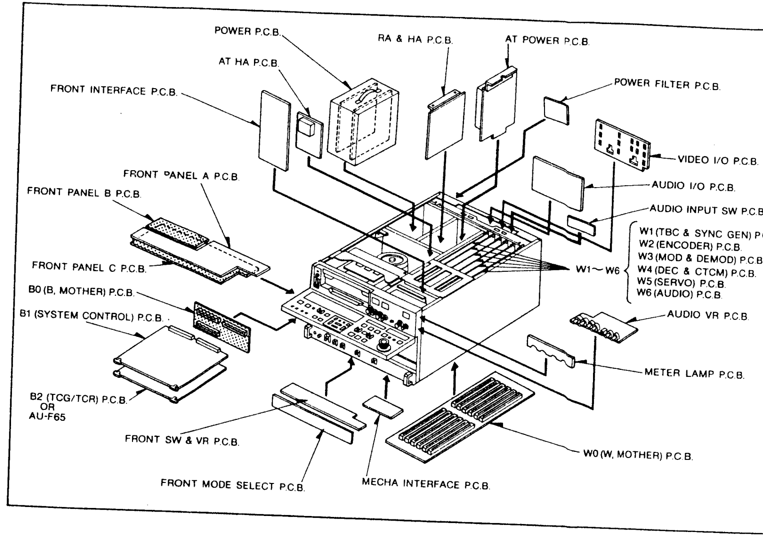
POWER P.C.B.
RA & HA P.C.B.
AT POWER P.C.B.
AT HA P.C.B.
FRONT INTERFACE P.C.B.
POWER FILTER P.C.B.
VIDEO I/O P.C.B.
FRONT PANEL A P.C.B.
FRONT PANEL B P.C.B.
AUDIO I/O P.C.B.
AUDIO INPUT SW P.C.B
W1 (TBC & SYNC GEN)
W2 (ENCODER) P.C.B.
W3 (MOD & DEMOD) P.C.B
W4 (DEC & CTCM) P.C.B.
W5 (SERVO) P.C.B.
W6 (AUDIO) P.C.B.
W1~W6
FRONT PANEL C P.C.B.
B0 (B, MOTHER) P.C.B.
B1 (SYSTEM CONTROL) P.C.B.
AUDIO VR P.C.B.
METER LAMP P.C.B.
B2 (TCG/TCR) P.C.B.
OR
AU-F65
FRONT SW & VR P.C.B.
W0 (W, MOTHER) P.C.B.
FRONT MODE SELECT P.C.B.
MECHA INTERFACE P.C.B.

FRONT PANEL C P.C.BOARD

MODEL TYPE	AU-665	
NTSC	VEP66053E	See
PAL	———	

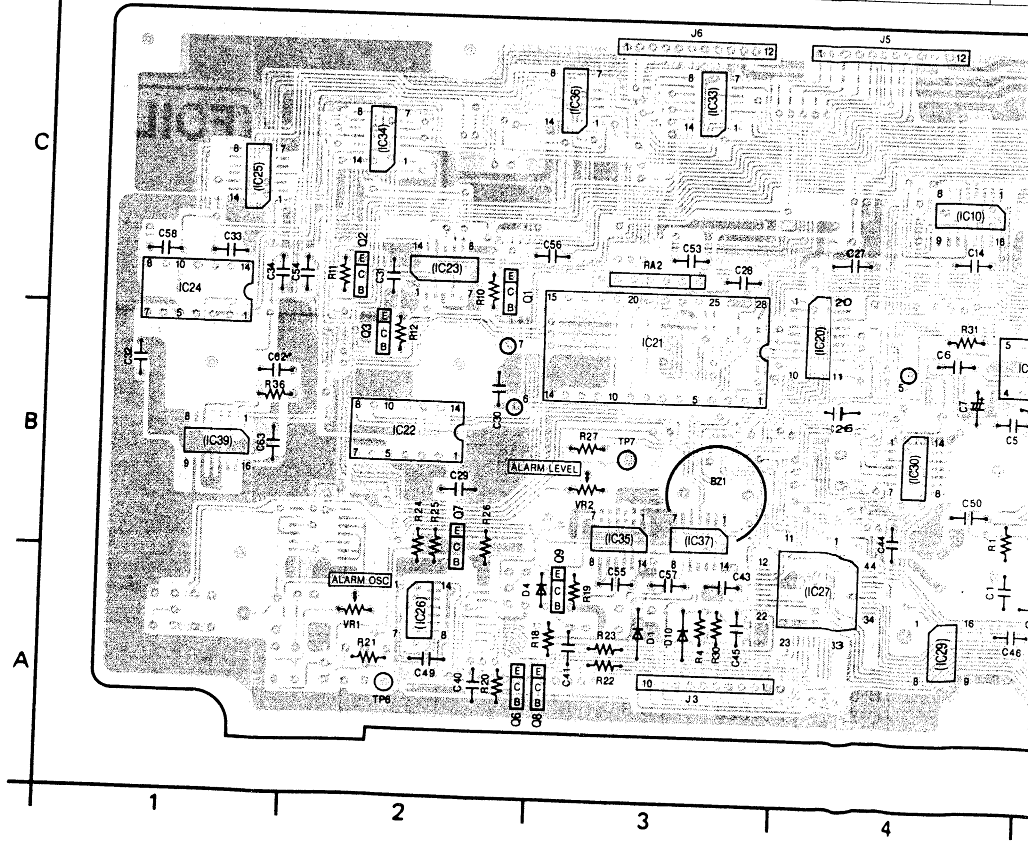
C
B
A
1
2
3
4
J6
J5
IC36
IC33
IC34
IC25
IC24
C58
C33
IC23
C56
RA2
C53
C28
C27
C14
IC10
IC21
IC20
IC22
IC39
R36
R31
C6
ALARM LEVEL
VR2
R27
TP7
BZ1
IC30
IC35
IC37
C29
ALARM OSC
VR1
IC26
C55
C57
C43
IC27
C50
C49
TP6
R21
R22
R23
J3
IC28
C46

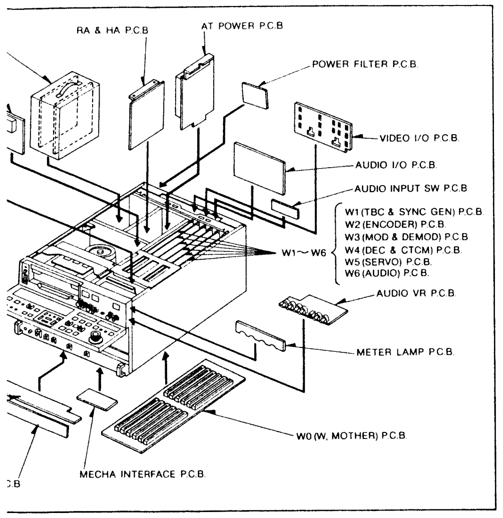
RA & HA P.C.B
AT POWER P.C.B
POWER FILTER P.C.B
VIDEO I/O P.C.B
AUDIO I/O P.C.B
AUDIO INPUT SW P.C.B
W1 (TBC & SYNC GEN) P.C.B
W2 (ENCODER) P.C.B
W3 (MOD & DEMOD) P.C.B
W4 (DEC & CTCM) P.C.B
W5 (SERVO) P.C.B
W6 (AUDIO) P.C.B
W1～W6
AUDIO VR P.C.B
METER LAMP P.C.B
W0 (W, MOTHER) P.C.B
MECHA INTERFACE P.C.B
CB

FRONT PANEL(C) P.C.BOARD<VEP66053>

Q1	F-2
Q2	F-2
Q3	F-2
Q4	E-8
Q5	E-8
Q6	E-6
Q7	E-2
Q8	E-3
Q9	E-3
Q10	F-8
Q11	G-9
IC1	E-5
IC2	E-5
IC3	F-5
IC4	F-6
IC5	F-6
IC6	F-6
IC7	F-6
IC8	F-6
IC9	G-5
IC10	G-4
IC11	E-7
IC12	F-7
IC13	G-8
IC14	G-8
IC15	G-7
IC16	G-7
IC17	G-6
IC18	G-6
IC19	G-5
IC20	F-4
IC21	F-3
IC22	F-2
IC23	F-2
IC24	F-1
IC25	G-1
IC26	E-2
IC27	E-4
IC28	E-7
IC29	E-4
IC30	F-4
IC31	G-10
IC32	E-5
IC33	G-3
IC34	G-2
IC35	E-3
IC36	G-3
IC37	E-3
IC38	G-9
IC39	F-1
TP2	G-9
TP3	G-9
TP4	E-8
TP6	E-2
TP7	F-3
TPG1	E-8
VR1	E-2
VR2	F-3
P150	G-10
J1	F-9
J2	E-8
J3	E-3
J4	E-5
J5	G-4
J6	G-3

ADDRESS INFORMATION

CHIP PART INFORMATION

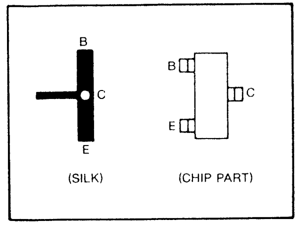
B
C
E
(SILK)
B
C
E
(CHIP PART)

C.BOARD

MODEL / TYPE	AU-665	AU-65	AU-63	AU-62
NTSC	VEP66053E	See Next Page	Not Used	
PAL	———			

(FOIL SIDE)

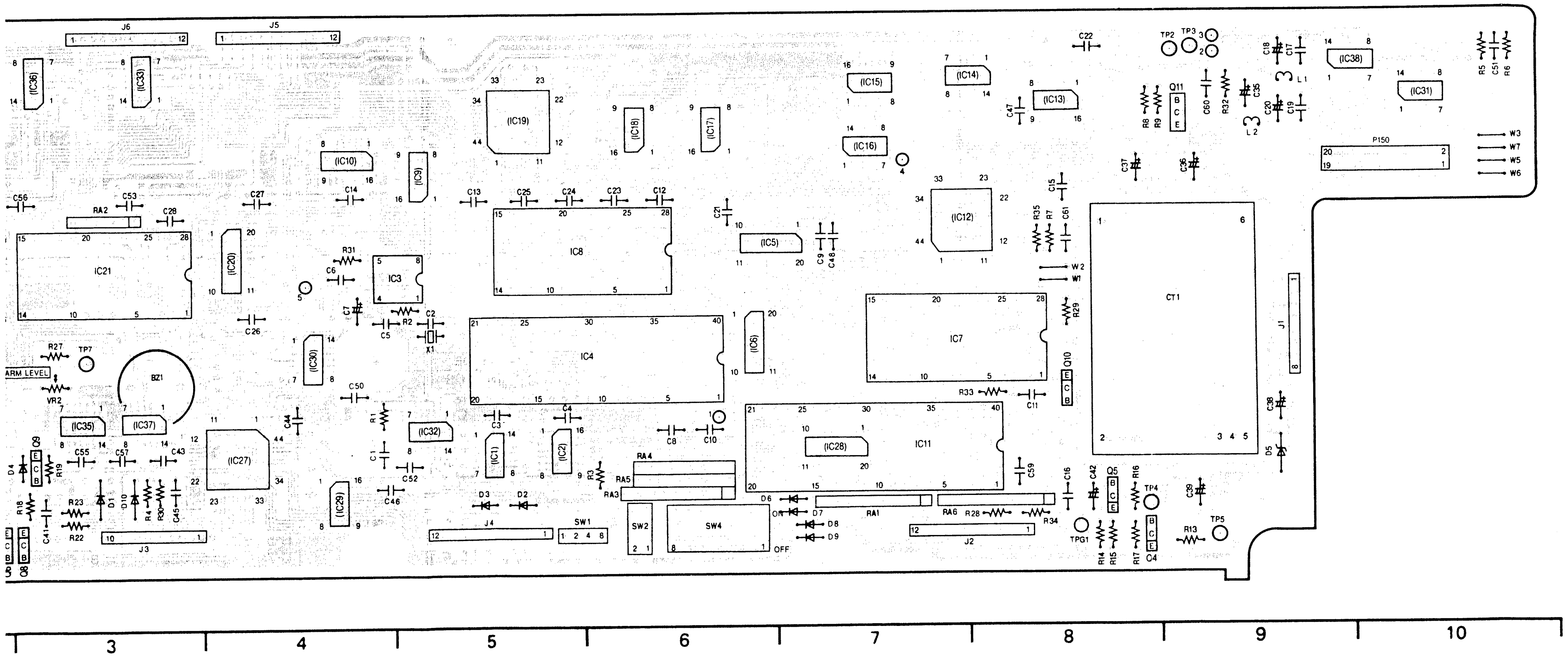
J6
J5
IC36
IC33
IC19
IC18
IC17
IC15
IC14
IC13
IC38
IC31
IC10
IC9
IC16
IC12
P150
W3
W7
W5
W6
IC21
IC20
IC3
IC8
IC5
W2
W1
CT1
J1
IC7
IC30
IC6
IC4
TP7
ARM LEVEL
VR2
BZ1
IC35
IC37
IC27
IC29
IC32
IC1
IC2
IC28
IC11
RA4
RA5
RA3
SW1
SW2
SW4
OFF
RA1
RA6
J2
J3
J4
TP2
TP3
TP4
TP5
TPG1
X1
3
4
5
6
7
8
9
10

FRONT PANEL C P.C.BOARD

MODEL / TYPE	AU-665	AU
NTSC	See Front Page	VEP8
PAL	———	VEP8

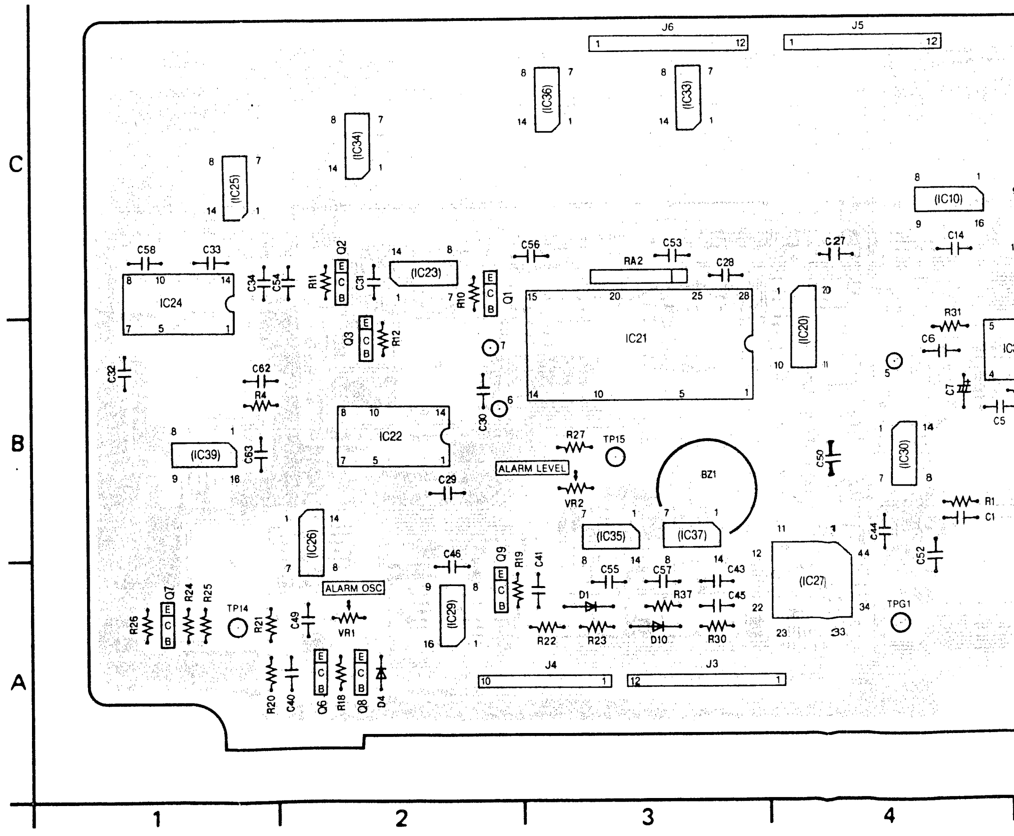
C
B
A
J6
J5
IC36
IC33
IC34
IC25
IC10
IC24
IC23
RA2
IC21
IC20
IC39
IC22
ALARM LEVEL
VR2
TP15
BZ1
IC30
IC26
ALARM OSC
VR1
IC29
IC35
IC37
IC27
TP14
TPG1
J4
J3
1
2
3
4

IC37	E-3
IC38	G-9
IC39	F-1
TP2	G-9
TP3	G-9
TP4	E-8
TP6	E-2
TP7	F-3
TPG1	E-8
VR1	E-2
VR2	F-3
P150	G-10
J1	F-9
J2	E-8
J3	E-3
J4	E-5
J5	G-4
J6	G-3

ADDRESS INFORMATION

CHIP PART INFORMATION

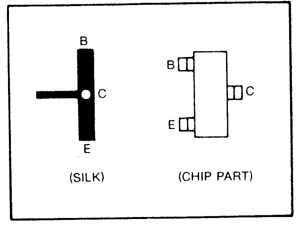
B
C
E
B
C
E
(SILK)
(CHIP PART)

FRONT PANEL(C) P.C.BOARD

<VEP86048A>

Q1	C-2
Q2	C-2
Q3	B-2
Q4	A-8
Q5	A-8
Q6	A-2
Q7	A-1
Q8	A-2
Q9	A-2
Q10	B-8
Q11	C-9
IC1	A-5
IC2	A-5
IC3	B-5
IC4	B-6
IC5	C-7
IC6	B-6
IC7	B-8
IC8	B-6
IC9	C-5
IC10	C-4
IC11	A-7
IC12	C-7
IC13	C-8
IC14	C-8
IC15	C-7
IC16	C-7
IC17	C-6
IC18	C-6
IC19	C-5
IC20	B-4
IC21	B-3
IC22	B-2
IC23	C-2
IC24	C-1
IC25	C-1
IC26	B-2
IC27	A-4
IC28	A-7
IC29	A-2
IC30	B-4
IC31	C-10
IC32	B-5
IC33	C-3
IC34	C-2
IC35	B-3
IC36	C-3
IC37	B-3
IC38	C-9
IC39	B-1
TP6	D-9
TP7	D-9
TP12	A-9
TP13	A-9
TP14	A-1
TP15	B-3
TPG1	A-4
VR1	A-2
VR2	B-3
J1	B-9
J2	A-8
J3	A-3
J4	A-3
J5	D-4
J6	D-3

ADDRESS INFORMATION

FRONT PANEL C P.C.BOARD

MODEL / TYPE	AU-665	AU-65	AU-63	AU-62
NTSC	See Front Page	VEP86048F	Not Used	
PAL	——	VEP86048G		

(FOIL SIDE)

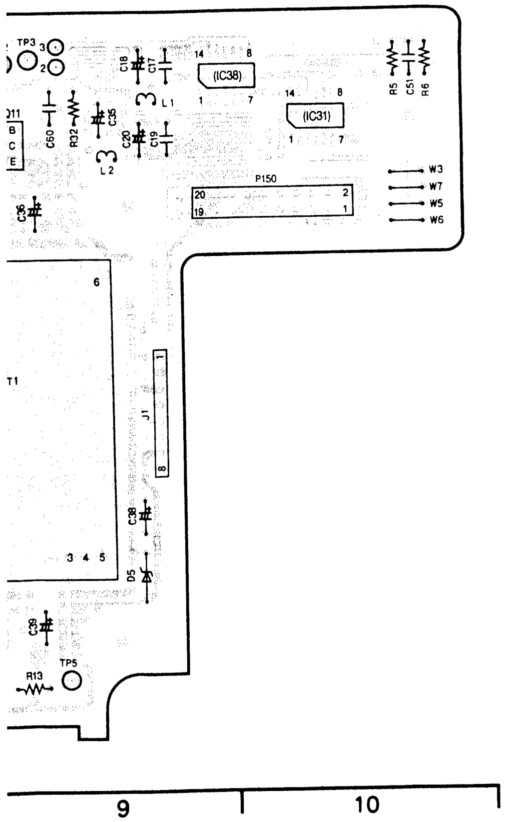
TP3
IC38
IC31
P150
W3
W7
W5
W6
J1
T1
TP5
9
10

(FOIL SIDE)

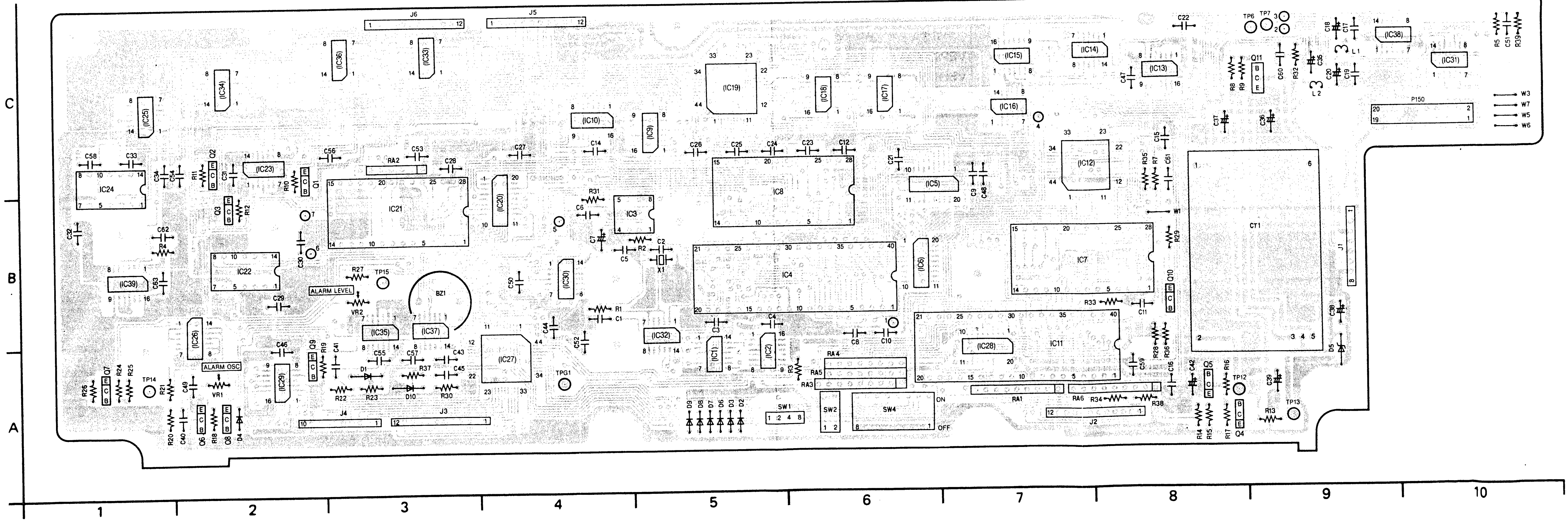
J6
J5
IC36
IC33
IC34
IC25
IC24
IC23
IC21
IC20
IC19
IC18
IC17
IC16
IC15
IC14
IC13
IC12
IC10
IC9
IC8
IC5
IC3
IC4
IC6
IC7
IC22
IC39
IC30
IC26
IC29
IC35
IC37
IC27
IC32
IC1
IC2
IC28
IC11
IC38
IC31
CT1
BZ1
X1
TP14
TP15
TPG1
TP6
TP7
TP12
TP13
ALARM LEVEL
ALARM OSC
VR1
VR2
RA1
RA2
RA3
RA4
RA5
RA6
SW1
SW2
SW4
ON
OFF
J1
J2
J3
J4
P150
W1
W3
W7
W5
W6
A
B
C
1
2
3
4
5
6
7
8
9
10

REVERSE SIDE

FRONT SW VR P.C.BOARD
MECHA INTERFACE P.C.BOARD

TYPE \ MODEL	AU-665	AU-65	AU-63	AU-62
NTSC	VYK3004	VYK3004	VYK3004	VYK3004
PAL	VYK3637	VYK3637	VYK3637	VYK3637

POWER SUPPLY A P.C.BOARD

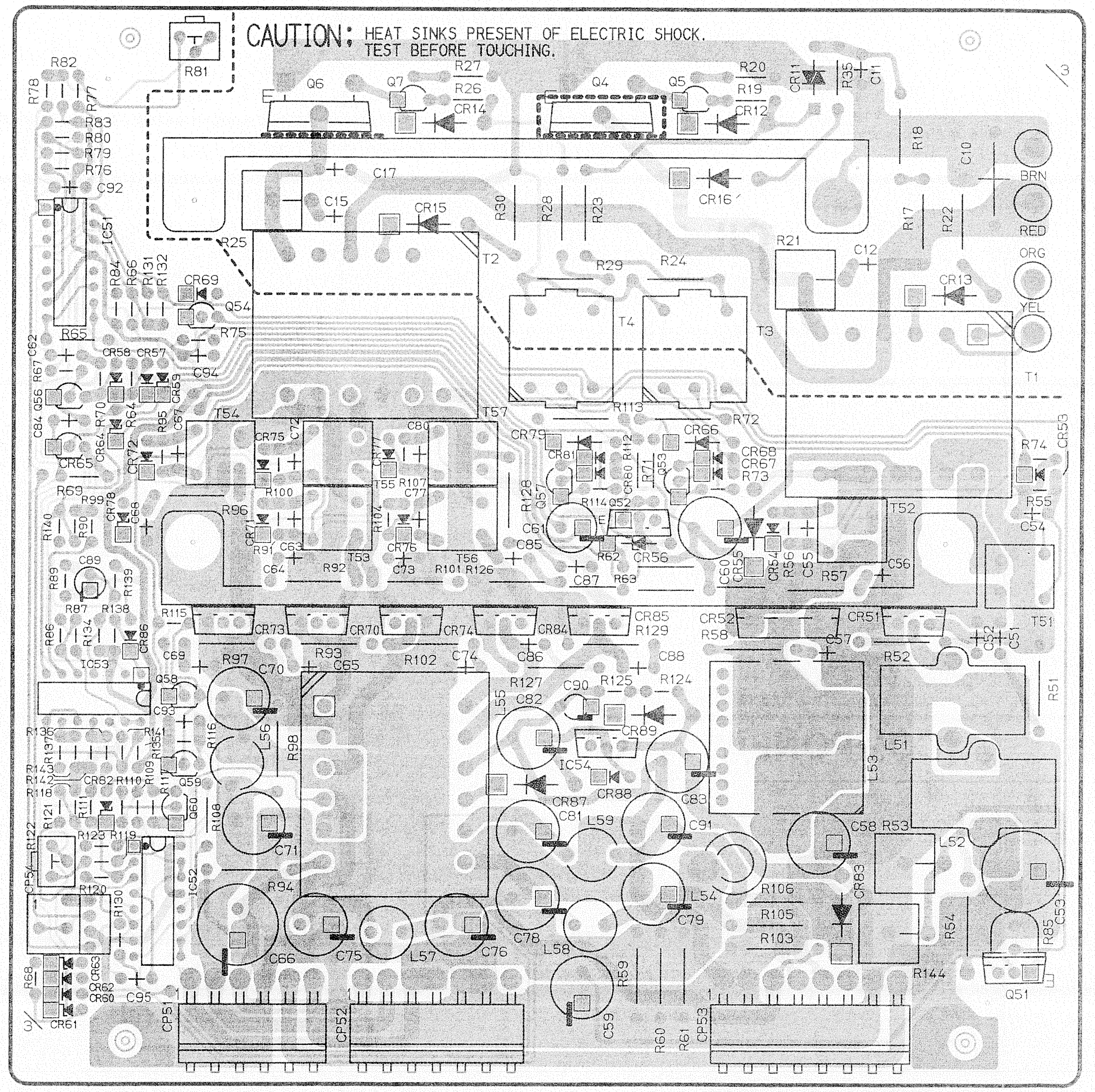
CAUTION; HEAT SINKS PRESENT OF ELECTRIC SHOCK.
TEST BEFORE TOUCHING.
BRN
RED
ORG
YEL
T1
T2
T3
T4
T51
T52
T53
T54
T55
T56
T57
IC51
IC52
IC53
IC54
CP51
CP52
CP53
Q4
Q5
Q6
Q7
Q51
R81
R62
R78
R25
C17
C15
CR15
CR16
R18
R17
R22
R21
C10
C12
CR13
R20
R19
R27
R26
CR14
CR12
CR11
R35
C11

(COMPONENT SIDE)

POWER SUPPLY B P.C.BOARD

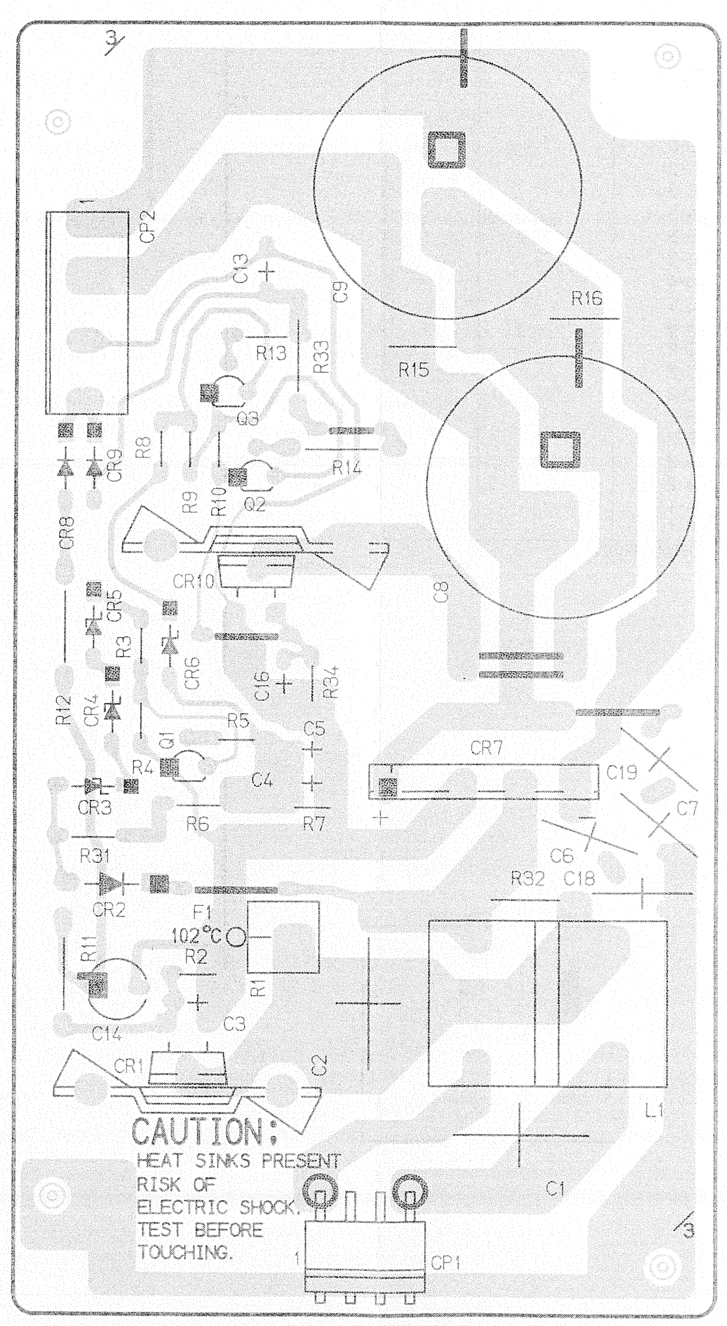
CAUTION:
HEAT SINKS PRESENT
RISK OF
ELECTRIC SHOCK.
TEST BEFORE
TOUCHING.
CP1
CP2
C1
C2
C3
C4
C5
C6
C7
C8
C9
C13
C14
C16
C18
C19
CR1
CR2
CR3
CR4
CR5
CR6
CR7
CR8
CR9
CR10
F1
102°C
Q1
Q2
Q3
R15
R16
L1
T1

(COMPONENT SIDE)

POWER (VYK 3				
IC				D58
IC51	E-1	DIODE		D59
IC52	B-2	D1	B-8	D60
IC53	C-1	D2	C-8	D61
IC54	C-4	D3	C-8	D62
		D4	D-8	D63
		D5	D-8	D64
TRANSISTOR		D6	D-8	D65
Q1	C-8	D7	C-9	D66
Q2	E-8	D8	E-8	D67
Q3	E-8	D9	E-8	D68
Q4	F-4	D10	D-9	D69
Q5	F-4	D11	F-5	D70
Q6	F-2	D12	F-4	D71
Q7	F-3	D13	E-5	D72
Q51	B-6	D14	F-3	D73
Q52	D-4	D15	E-3	D74
Q53	D-4	D16	F-4	D75
Q54	E-2	D51	C-5	D76
Q56	E-1	D52	C-5	D77
Q57	D-4	D53	D-6	D78
Q58	C-2	D54	D-5	D79
Q59	C-2	D55	D-4	D80
Q60	B-2	D56	D-4	D81
		D57	E-1	D82

OARD

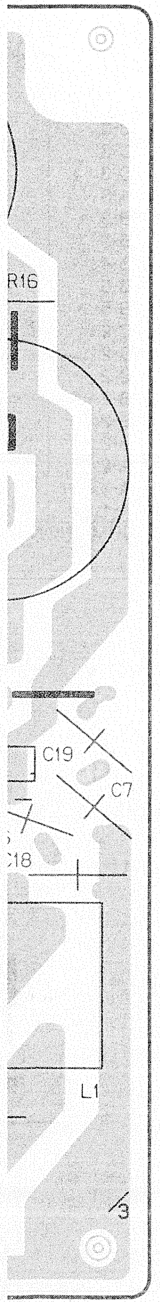
R16
C19
C7
C18
L1
3

SIDE)

POWER FILTER P.C.BOARD

MODEL / TYPE	AU-665	AU-65	AU-63	AU-62
NTSC	VEP81042A	VEP81042A	VEP81042A	VEP81042A
PAL	VEP81058A	VEP81058A	VEP81058A	VEP81058A

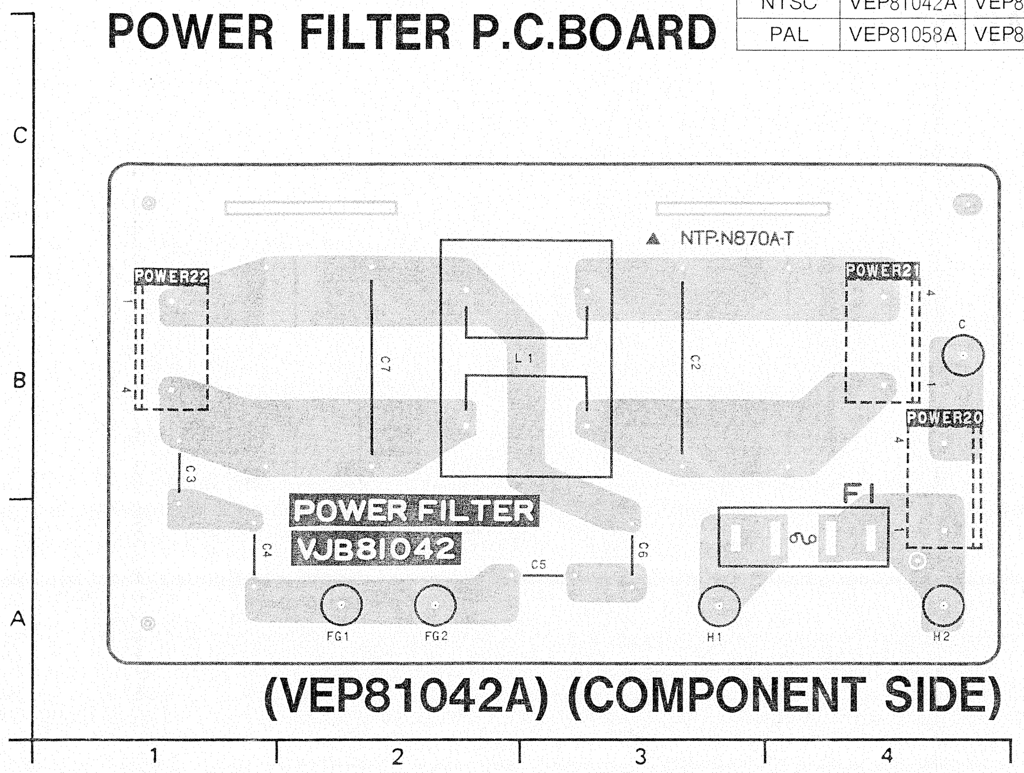
▲ NTP-N870A-T
POWER22
POWER21
POWER20
POWER FILTER
VJB81042
F1
L1
C2
C3
C4
C5
C6
C7
FG1
FG2
H1
H2
A
B
C
1
2
3
4

(VEP81042A) (COMPONENT SIDE)

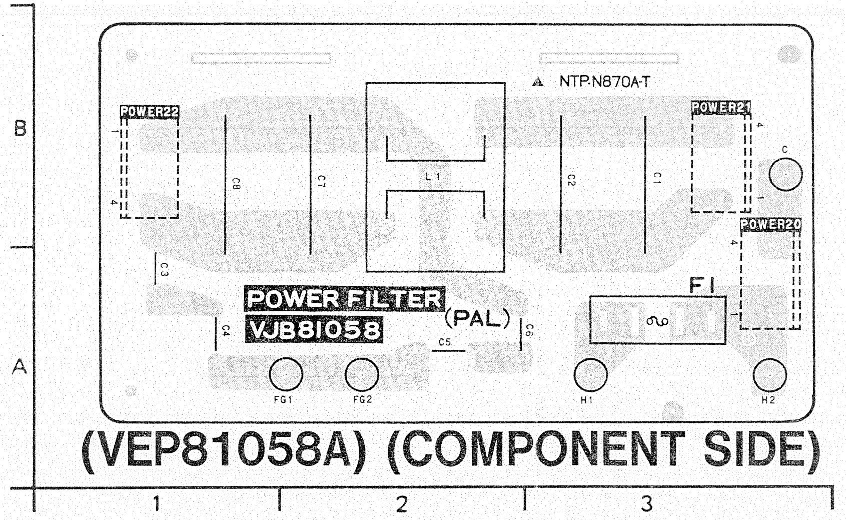
▲ NTP-N870A-T
POWER22
POWER21
POWER20
POWER FILTER
VJB81058
(PAL)
F1
L1
C1
C2
C3
C4
C5
C7
C8
FG1
FG2
H1
H2
A
B
1
2
3

(VEP81058A) (COMPONENT SIDE)

POWER (VYK 3004)							
IC				D58	E-1	D83	B-5
IC51	E-1	DIODE		D59	E-2	D84	C-3
IC52	B-2	D1	B-8	D60	B-1	D85	C-4
IC53	C-1	D2	C-8	D61	B-1	D86	C-1
IC54	C-4	D3	C-8	D62	B-1	D87	C-3
		D4	D-8	D63	B-1	D88	C-4
		D5	D-8	D64	D-1	D89	C-4
TRANSISTOR		D6	D-8	D65	D-1	D90	
Q1	C-8	D7	C-9	D66	D-4		
Q2	E-8	D8	E-8	D67	D-4		
Q3	E-8	D9	E-8	D68	D-4	CONNECTOR	
Q4	F-4	D10	D-9	D69	E-2	P1	A-9
Q5	F-4	D11	F-5	D70	C-2	P2	E-8
Q6	F-2	D12	F-4	D71	D-2	P51	A-2
Q7	F-3	D13	E-5	D72	D-1	P52	A-3
Q51	B-6	D14	F-3	D73	C-2	P53	A-5
Q52	D-4	D15	E-3	D74	C-3	P54	
Q53	D-4	D16	F-4	D75	D-2		
Q54	E-2	D51	C-5	D76	D-3		
Q56	E-1	D52	C-5	D77	D-3	VARIABLE RESISTOR	
Q57	D-4	D53	D-6	D78	D-1	VR81	F-2
Q58	C-2	D54	D-5	D79	D-4	VR122	B-1
Q59	C-2	D55	D-4	D80	D-4		
Q60	B-2	D56	D-4	D81	D-4		
		D57	E-1	D82	C-1		

P.C. Board Location

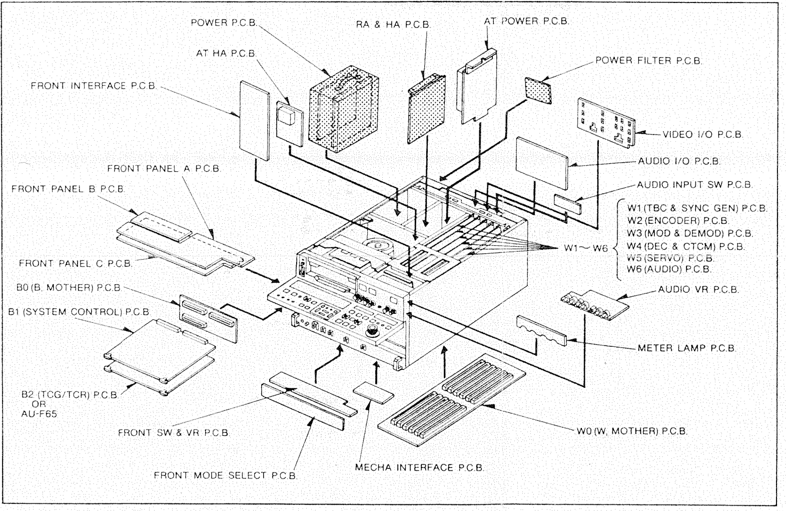
POWER P.C.B.
RA & HA P.C.B.
AT POWER P.C.B.
AT HA P.C.B.
POWER FILTER P.C.B.
FRONT INTERFACE P.C.B.
VIDEO I/O P.C.B.
AUDIO I/O P.C.B.
FRONT PANEL A P.C.B.
FRONT PANEL B P.C.B.
AUDIO INPUT SW P.C.B.
W1 (TBC & SYNC GEN) P.C.B.
W2 (ENCODER) P.C.B.
W3 (MOD & DEMOD) P.C.B.
W4 (DEC & CTCM) P.C.B.
W5 (SERVO) P.C.B.
W6 (AUDIO) P.C.B.
W1 ~ W6
FRONT PANEL C P.C.B.
B0 (B. MOTHER) P.C.B.
AUDIO VR P.C.B.
B1 (SYSTEM CONTROL) P.C.B.
METER LAMP P.C.B.
B2 (TCG/TCR) P.C.B.
OR
AU-F65
FRONT SW & VR P.C.B.
W0 (W. MOTHER) P.C.B.
MECHA INTERFACE P.C.B.
FRONT MODE SELECT P.C.B.

RA.HA P.C.BOARD

MODEL / TYPE	AU-665	AU-65	AU-63	AU-62
NTSC	VEP85015A	VEP85015A	VEP85015C	VEP85015
PAL	VEP85015D	VEP85015D	VEP85015F	VEP85015

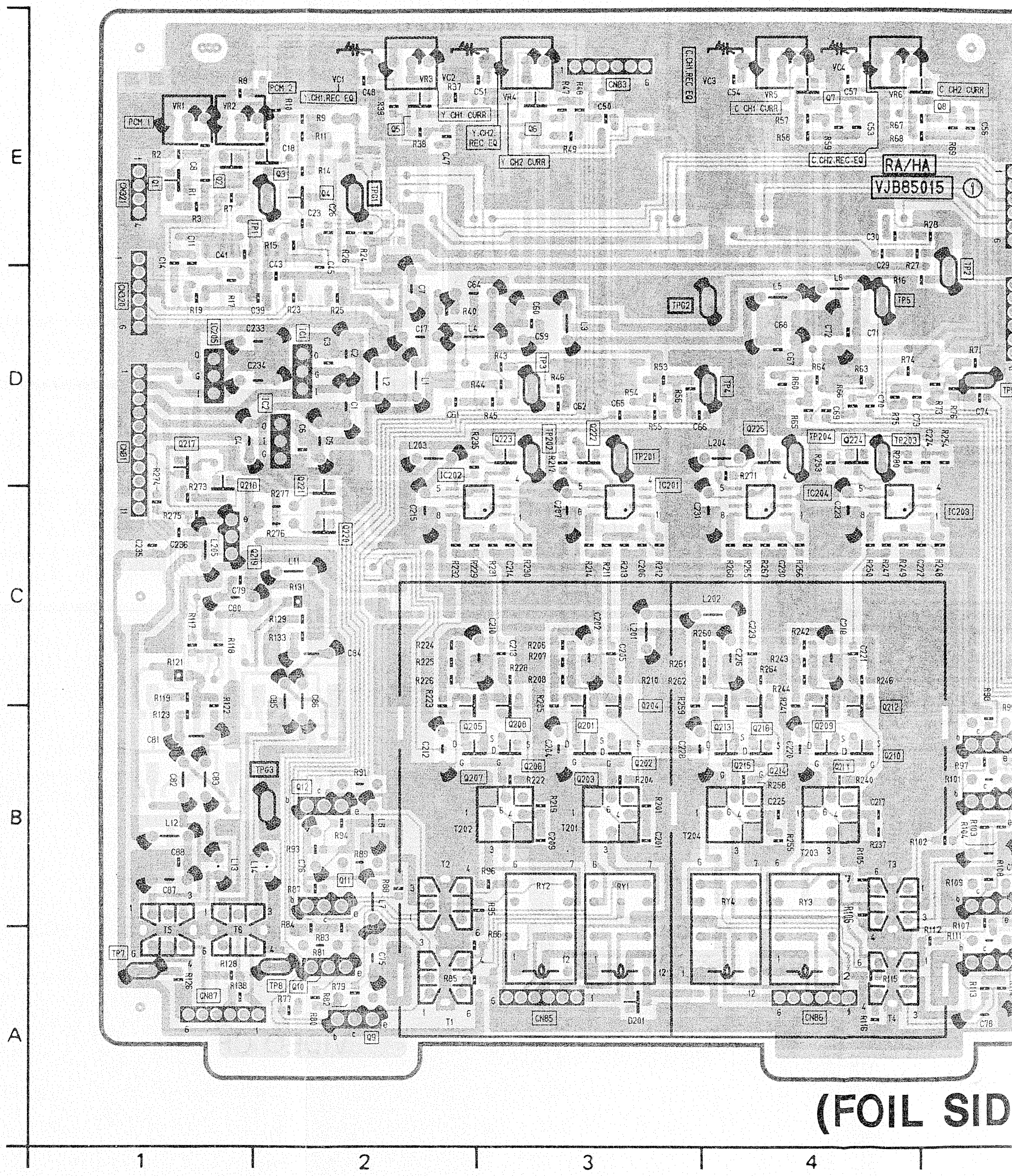
RA/HA
VJB85015 ①
A
B
C
D
E
1
2
3
4

(FOIL SID

CHIP PART INFORMATION

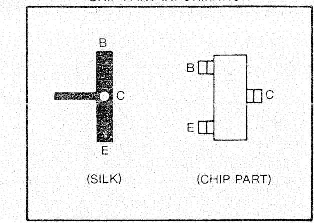

(SILK) (CHIP PART)

FOIL SIDE							
TRANSISTOR		Q10	A-2	Q205	B-2	Q216	B-
		Q11	B-2	Q206	B-3	Q217	D-
Q1	E-1	Q12	B-2	Q207	B-2	Q218	D-
Q2	E-1	Q13	B-5	Q208	B-3	Q219	C-
Q3	E-2	Q14	B-5	Q209	B-4	Q220	C-
Q4	E-2	Q15	B-5	Q210	B-4	Q221	C-
Q5	E-2	Q16	A-5	Q211	B-4	Q222	D-
Q6	E-3	Q201	B-3	Q212	B-4	Q223	D-
Q7	E-4	Q202	B-3	Q213	B-4	Q224	D-
Q8	E-5	Q203	B-3	Q214	B-4	Q225	D-
Q9	A-2	Q204	B-3	Q215	B-4		

ADDRESS INFORMATION

POWER SUPPLY A P.C.BO
POWER SUPPLY B P.C.BO
POWER FILTER P.C.BOAR
RA. HA P.C.BOARD

	AU-665	AU-65	AU-63	AU-62
	VEP81042A	VEP81042A	VEP81042A	VEP81042A
	VEP81058A	VEP81058A	VEP81058A	VEP81058A

RA.HA P.C.BOARD

TYPE \ MODEL	AU-665	AU-65	AU-63	AU-62
NTSC	VEP85015A	VEP85015A	VEP85015C	VEP85015B
PAL	VEP85015D	VEP85015D	VEP85015F	VEP85015E

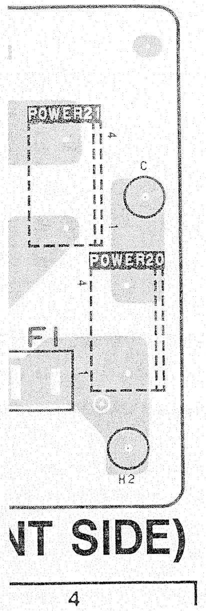
POWER21
POWER20
F1
H2
C
4

NT SIDE)

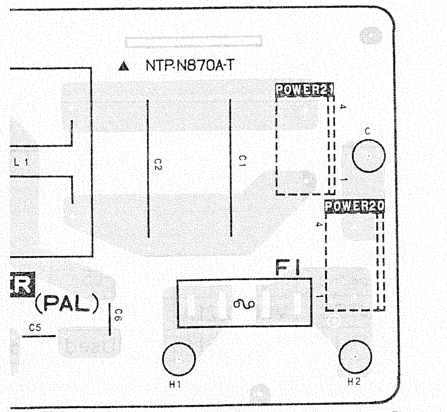
▲ NTP-N870A-T
POWER21
POWER20
L1
C2
C1
F1
(PAL)
C5
H1
H2

COMPONENT SIDE)

3

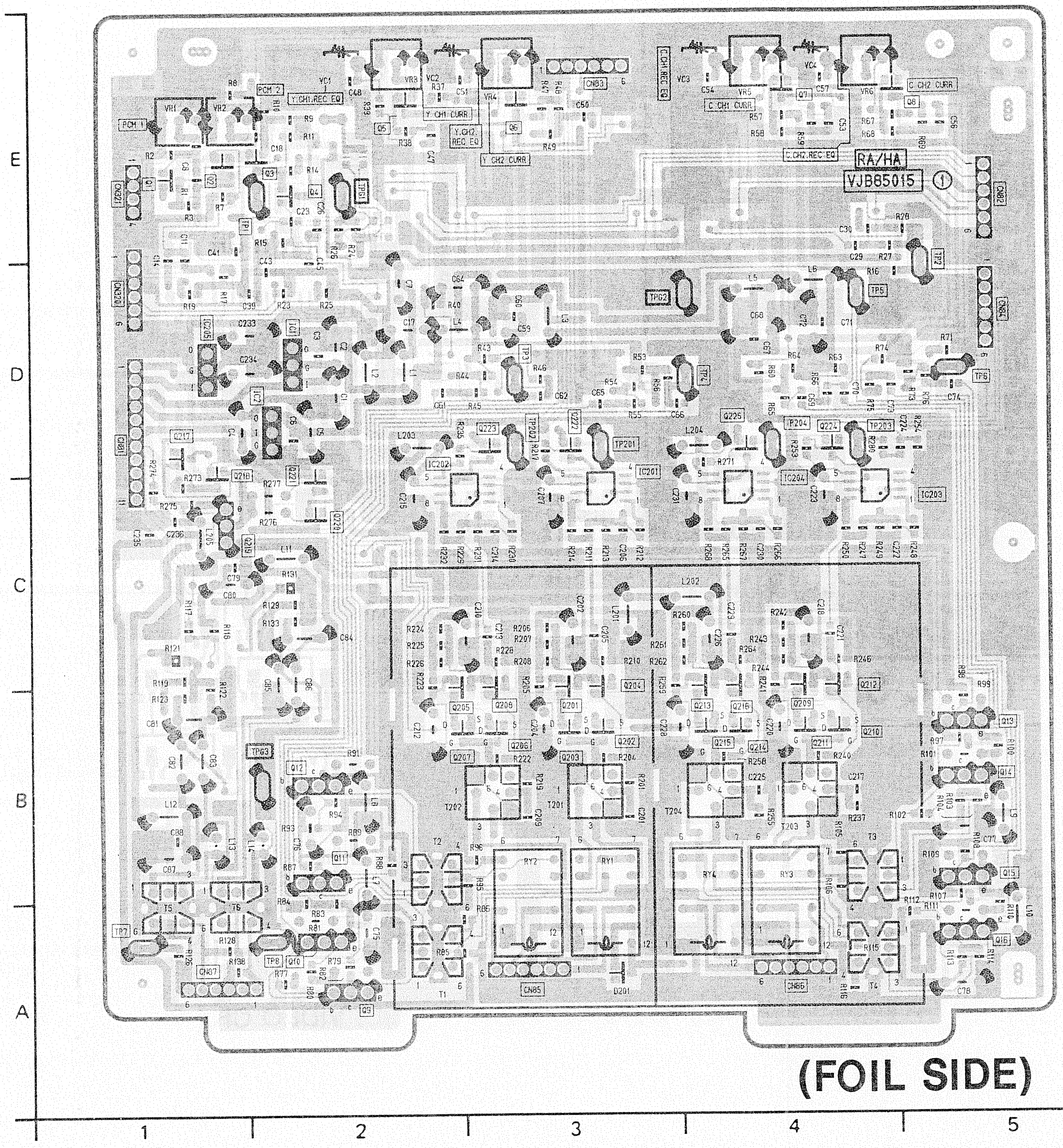
E
D
C
B
A
RA/HA
VJB85015 ①
1
2
3
4
5

(FOIL SIDE)

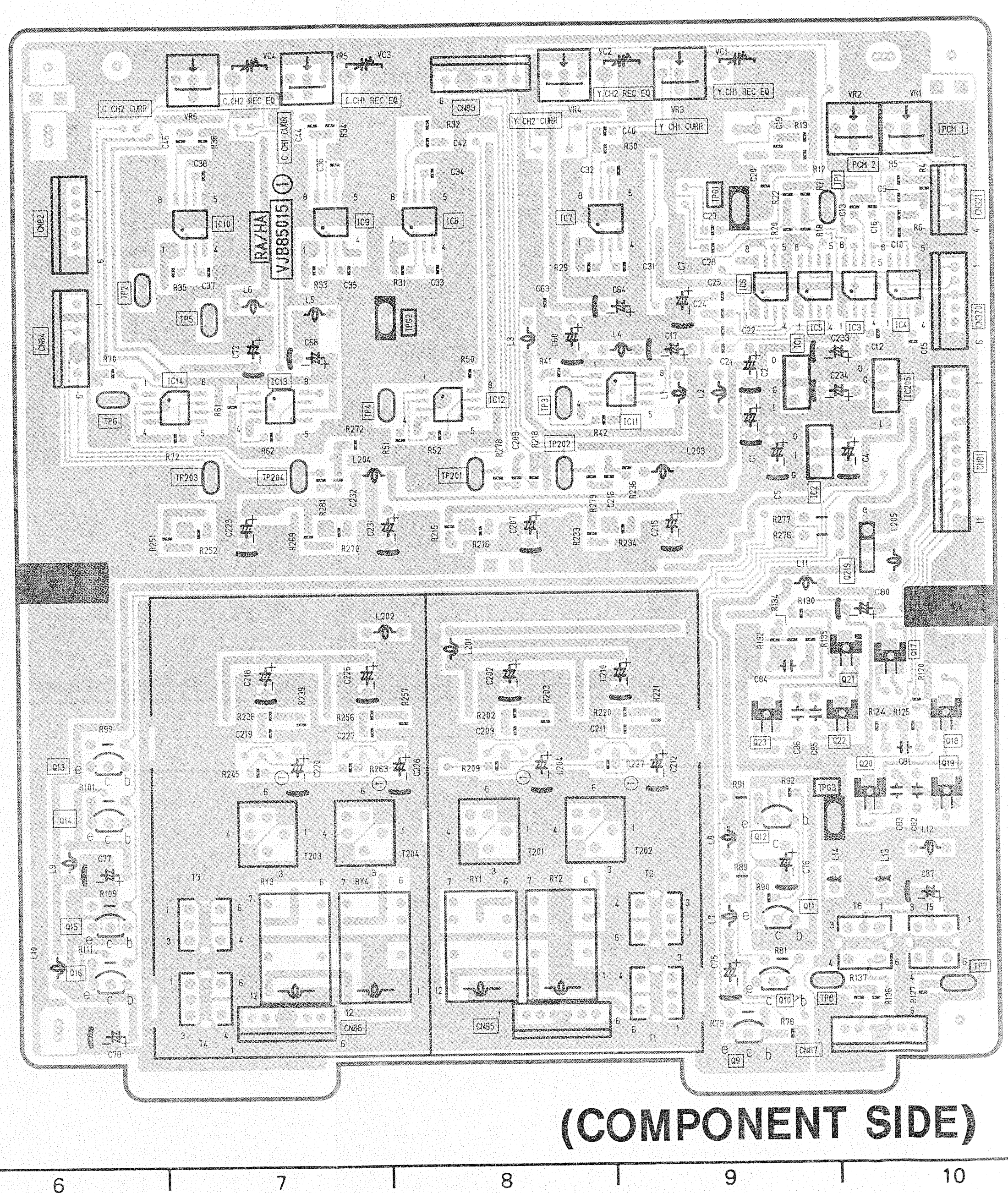
RA/HA
VJB85015 ①
6
7
8
9
10

(COMPONENT SIDE)

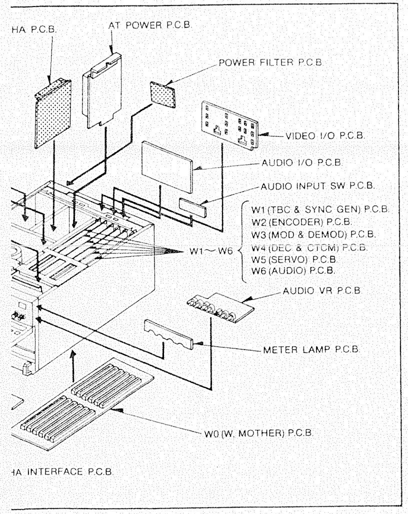
HA P.C.B.
AT POWER P.C.B.
POWER FILTER P.C.B.
VIDEO I/O P.C.B.
AUDIO I/O P.C.B.
AUDIO INPUT SW P.C.B.
W1 (TBC & SYNC GEN) P.C.B.
W2 (ENCODER) P.C.B.
W3 (MOD & DEMOD) P.C.B.
W4 (DEC & CTCM) P.C.B.
W5 (SERVO) P.C.B.
W6 (AUDIO) P.C.B.
W1～W6
AUDIO VR P.C.B.
METER LAMP P.C.B.
W0 (W, MOTHER) P.C.B.
HA INTERFACE P.C.B.

CHIP PART INFORMATION

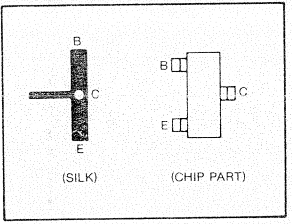
B
C
E
B
C
E
(SILK)
(CHIP PART)

RA. HA																			
FOIL SIDE		Q10	A-2	Q205	B-2	Q216	B-4	INTEGRATED CIRCUIT		TP3	D-3	TPG2	D-4	CN82	E-5	COMPONENT SIDE		IC4	D-10
TRANSISTOR		Q11	B-2	Q206	B-3	Q217	D-1	IC1	D-2	TP4	D-4	TPG3	B-2	CN83	E-3	TRANSISTOR		IC5	D-9
Q1	E-1	Q12	B-2	Q207	B-2	Q218	D-1	IC2	D-2	TP5	D-4	ADJUSTMENT		CN84	D-5	Q17	C-10	IC6	D-9
Q2	E-1	Q13	B-5	Q208	B-3	Q219	C-1	IC201	C-3	TP6	D-5	VR1	E-1	CN85	A-3	Q18	C-10	IC7	E-8
Q3	E-2	Q14	B-5	Q209	B-4	Q220	C-2	IC202	C-3	TP7	A-1	VR2	E-1	CN86	A-4	Q19	B-10	IC8	E-8
Q4	E-2	Q15	B-5	Q210	B-4	Q221	C-2	IC203	C-4	TP8	A-2	VR3	E-2	CN87	A-1	Q20	B-10	IC9	E-7
Q5	E-2	Q16	A-5	Q211	B-4	Q222	D-3	IC204	C-4	TP201	D-3	VR4	E-3	CN320	D-1	Q21	C-10	IC10	E-7
Q6	E-3	Q201	B-3	Q212	B-4	Q223	D-3	IC205	D-1	TP202	D-3	VR5	E-4	CN321	E-1	Q22	C-10	IC11	D-9
Q7	E-4	Q202	B-3	Q213	B-4	Q224	D-4	TEST POINT		TP203	D-4	VR6	E-4			Q23	C-9	IC12	D-8
Q8	E-5	Q203	B-3	Q214	B-4	Q225	D-4	TP1	E-2	TP204	D-4	CONNECTOR				INTEGRATED CIRCUIT		IC13	D-7
Q9	A-2	Q204	B-3	Q215	B-4			TP2	D-5	TPG1	E-2	CN81	D-1			IC3	D-10	IC14	D-7

ADDRESS INFORMATION

REVERSE SIDE

VIDEO I/O P.C.BOARD
50P REMOTE P.C.BOA

VIDEO I/O P.C.BOARD

MODEL / TYPE	AU-665	AU-65	AU-63	AU-62
NTSC	VEP83104A	See Next Page		
PAL	VEP83104B			

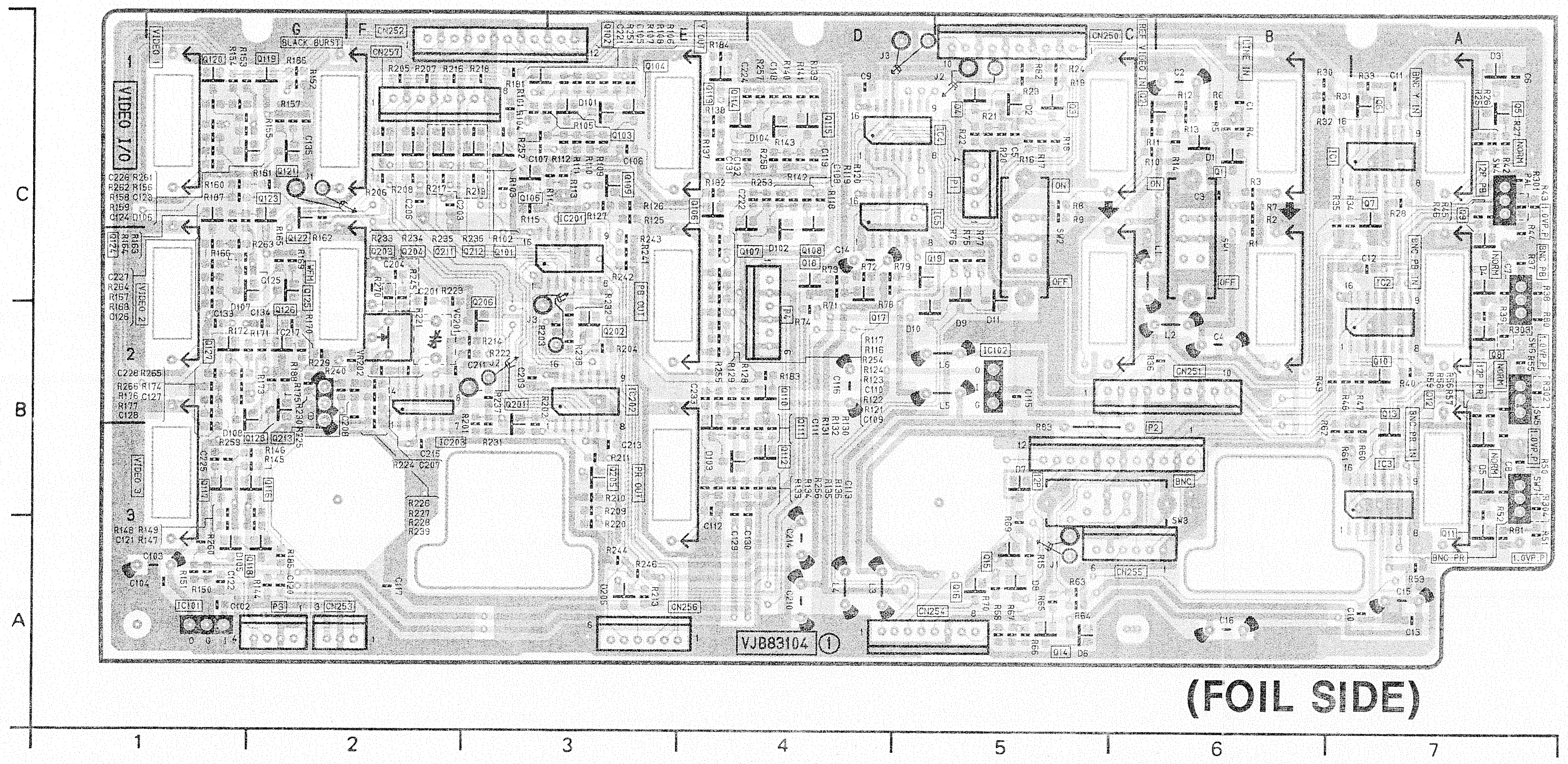

(FOIL SIDE)

VIDEO I/O			
FOIL SIDE			
TRANSISTOR			
Q1	C-6	Q125	C-2
Q2	C-6	Q126	B-2
Q3	C-5	Q127	B-1
Q4	C-5	Q128	B-2
Q5	C-7	Q201	B-3
Q6	C-7	Q202	B-3
Q7	C-7	Q203	C-2
Q8	B-7	Q204	C-2
Q9	C-7	Q205	B-3
Q10	B-7	Q206	B-3
Q11	A-7	Q211	C-2
Q12	B-7	Q212	C-3
Q13	B-7	Q213	B-2
Q14	A-5	**INTEGRATED CIRCUIT**	
Q15	A-5	IC1	C-7
Q16	A-5	IC2	B-7
Q17	C-4	IC3	B-7
Q18	C-4	IC4	C-5
Q19	C-5	IC5	C-5
Q101	C-3	IC101	A-1
Q102	C-3	IC102	B-5
Q103	C-3	IC201	C-3
Q104	C-3	IC202	B-3
Q105	C-3	IC203	B-2
Q106	C-4	**ADJUSTMENT**	
Q107	C-4	VR202	B-2
Q108	C-4	**CONNECTOR**	
Q109	C-3	CN250	C-5
Q110	B-4	CN251	B-6
Q111	B-4	CN252	C-9
Q112	B-4	CN253	A-2
Q113	C-4	CN254	A-5
Q114	C-4	CN255	A-6
Q115	C-4	CN256	A-3
Q116	B-2	CN257	C-2
Q117	B-1	P1	C-5
Q118	A-2	P2	B-6
Q119	C-2	P3	A-2
Q120	C-1		
Q121	C-2		
Q122	C-2		
Q123	C-2		
Q124	C-1		

ADDRESS INFORMATION

VIDEO I/O P.C.BOARD

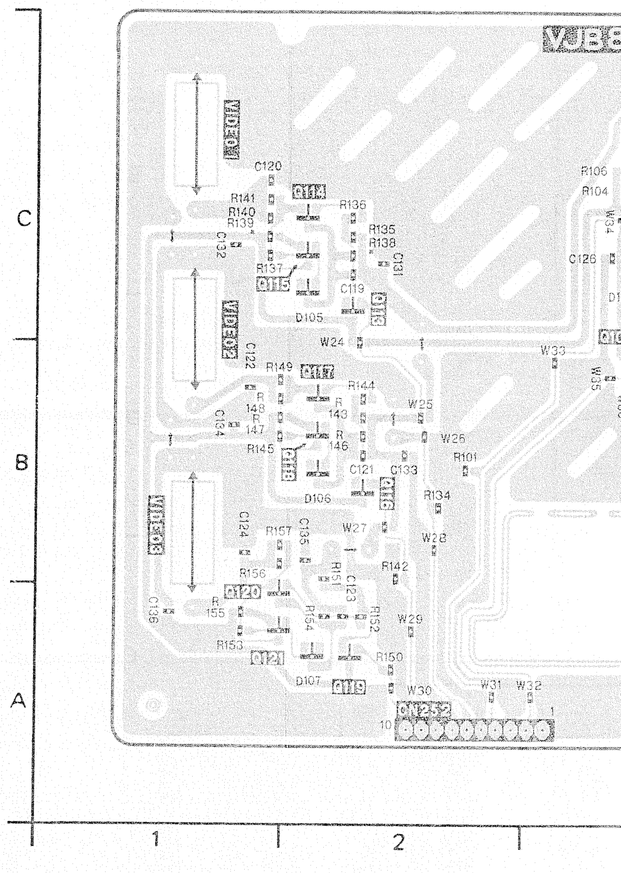

MODEL / TYPE	AU-665	AU-65	AU-63	AU-62
NTSC	VEP00E27C	VEP00E27C	VEP00E27C	VEP00E27C
PAL	VEP00E27C	VEP00E27C	VEP00E27C	VEP00E27C

TR SENSOR(1) P.C.BOARD

(FOIL SIDE)

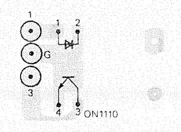

MODEL / TYPE	AU-665	AU-65	AU-63	AU-62
NTSC	VEP00E28C	VEP00E28C	VEP00E28C	VEP00E28C
PAL	VEP00E28C	VEP00E28C	VEP00E28C	VEP00E28C

TR SENSOR(2) P.C.BOARD

(FOIL SIDE)

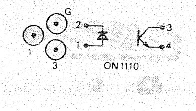

MODEL / TYPE	AU-665	AU-65	AU-63	AU-62
NTSC	VEP00E25C	VEP00E25C	VEP00E25C	VEP00E25C
PAL	VEP00E25C	VEP00E25C	VEP00E25C	VEP00E25C

UNLOADING PHOTO P.C.BOARD

(FOIL SIDE)

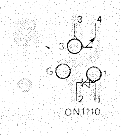

MODEL / TYPE	AU-665	AU-65	AU-63	AU-62
NTSC	VEP80083B	Not Used	Not Used	Not Used
PAL	VEP80083B	Not Used	Not Used	Not Used

VIDEO CH4 P.C.BOARD

(FOIL SIDE)

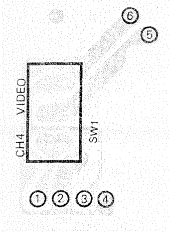

MODEL / TYPE	AU-665	AU
NTSC	VEP80621 A	Not
PAL	VEP80621 A	Not

VIDEO VR P.C.B

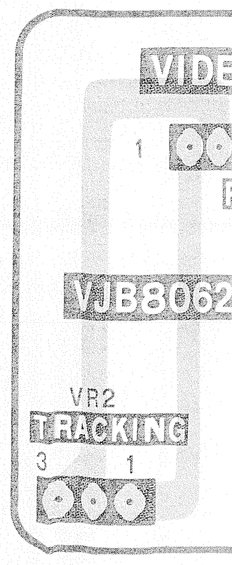

VIDEO I/O P.C.BOARD

MODEL / TYPE	AU-665	AU-65	AU-63	AU-62
NTSC	VEP83104A	See Next Page		
PAL	VEP83104B			

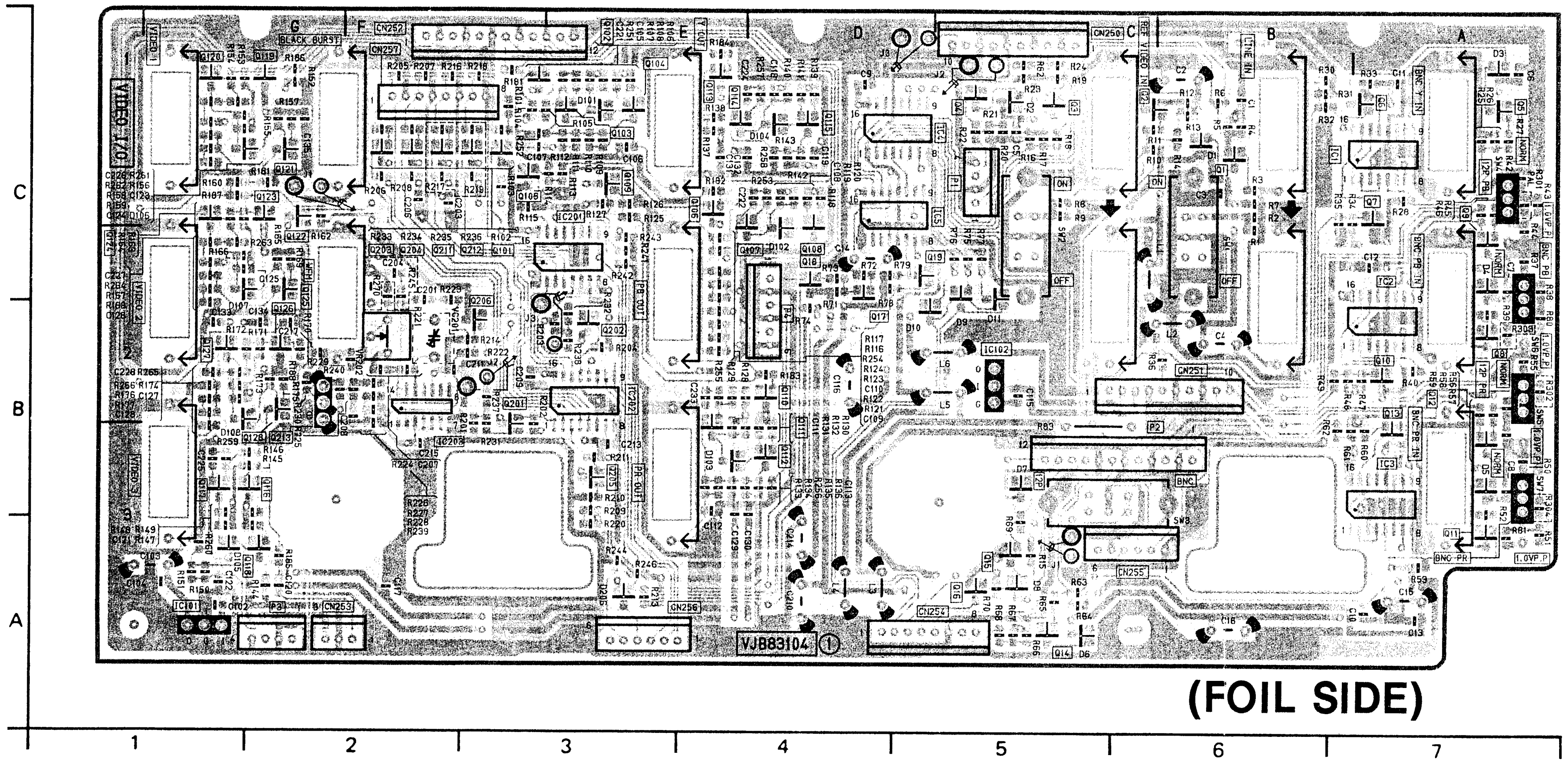

(FOIL SIDE)

VIDEO I/O	
FOIL SIDE	
TRANSISTOR	
Q1	C-6
Q2	C-6
Q3	C-5
Q4	C-5
Q5	C-7
Q6	C-7
Q7	C-7
Q8	B-7
Q9	C-7
Q10	B-7
Q11	A-7
Q12	B-7
Q13	B-7
Q14	A-5
Q15	A-5
Q16	A-5
Q17	C-4
Q18	C-4
Q19	C-5
Q101	C-3
Q102	C-3
Q103	C-3
Q104	C-3
Q105	C-3
Q106	C-4
Q107	C-4
Q108	C-4
Q109	C-3
Q110	B-4
Q111	B-4
Q112	B-4
Q113	C-4
Q114	C-4
Q115	C-4
Q116	B-2
Q117	B-1
Q118	A-2
Q119	C-2
Q120	C-1
Q121	C-2
Q122	C-2
Q123	C-2
Q124	C-1
Q125	C-2
Q126	B-2
Q127	B-1
Q128	B-2
Q201	B-3
Q202	B-3
Q203	C-2
Q204	C-2
Q205	B-3
Q206	B-3
Q211	C-2
Q212	C-3
Q213	B-2
INTEGRATED CIRCUIT	
IC1	C-7
IC2	B-7
IC3	B-7
IC4	C-5
IC5	C-5
IC101	A-1
IC102	B-5
IC201	C-3
IC202	B-3
IC203	B-2
ADJUSTMENT	
VR202	B-2
CONNECTOR	
CN250	C-5
CN251	B-6
CN252	C-9
CN253	A-2
CN254	A-5
CN255	A-6
CN256	A-3
CN257	C-2
P1	C-5
P2	B-6
P3	A-2

ADDRESS INFORMATION

VIDEO I/O P.C.BOARD

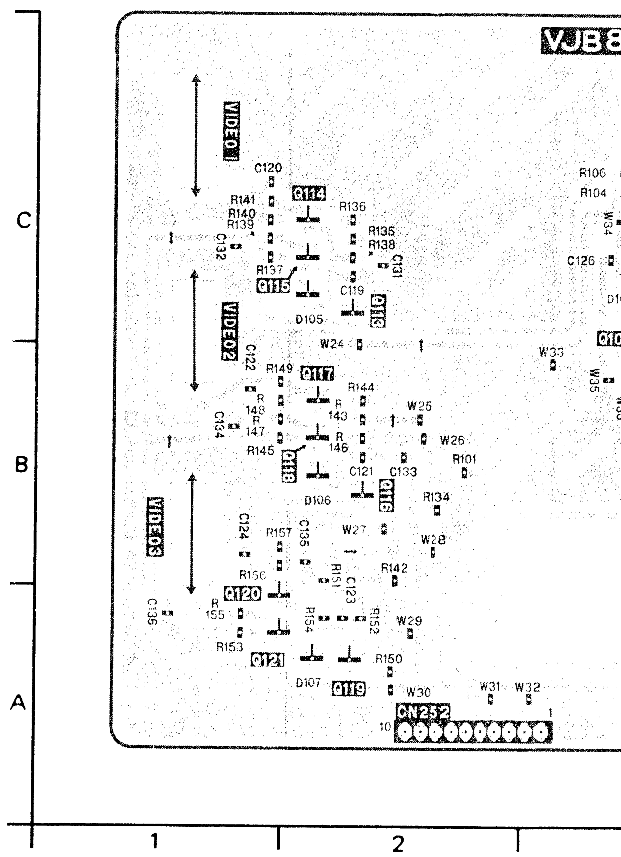

MODEL / TYPE	AU-665	AU-65	AU-63	AU-62
NTSC	VEP00E27C	VEP00E27C	VEP00E27C	VEP00E27C
PAL	VEP00E27C	VEP00E27C	VEP00E27C	VEP00E27C

TR SENSOR(1) P.C.BOARD

(FOIL SIDE)

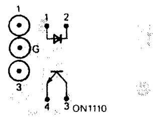

MODEL / TYPE	AU-665	AU-65	AU-63	AU-62
NTSC	VEP00E28C	VEP00E28C	VEP00E28C	VEP00E28C
PAL	VEP00E28C	VEP00E28C	VEP00E28C	VEP00E28C

TR SENSOR(2) P.C.BOARD

(FOIL SIDE)

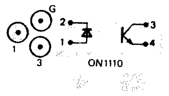

MODEL / TYPE	AU-665	AU-65	AU-63	AU-62
NTSC	VEP00E25C	VEP00E25C	VEP00E25C	VEP00E25C
PAL	VEP00E25C	VEP00E25C	VEP00E25C	VEP00E25C

UNLOADING PHOTO P.C.BOARD

(FOIL SIDE)

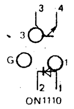

MODEL / TYPE	AU-665	AU-65	AU-63	AU-62
NTSC	VEP80083B	Not Used	Not Used	Not Used
PAL	VEP80083B	Not Used	Not Used	Not Used

VIDEO CH4 P.C.BOARD

(FOIL SIDE)

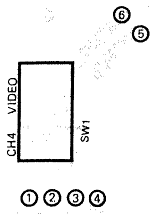

MODEL / TYPE	AU-665	AU
NTSC	VEP80621A	Not
PAL	VEP80621A	Not

VIDEO VR P.C.B

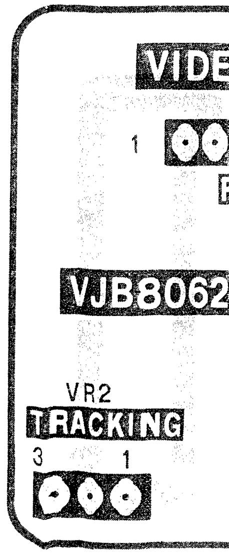

VIDEO I/O P.C.BOARD

MODEL / TYPE	AU-665	AU-65	AU-63	AU-62
NTSC	See Front Page	VEP83097A	VEP83097B	VEP83097B
PAL		VEP83097C	VEP83097B	VEP83097C

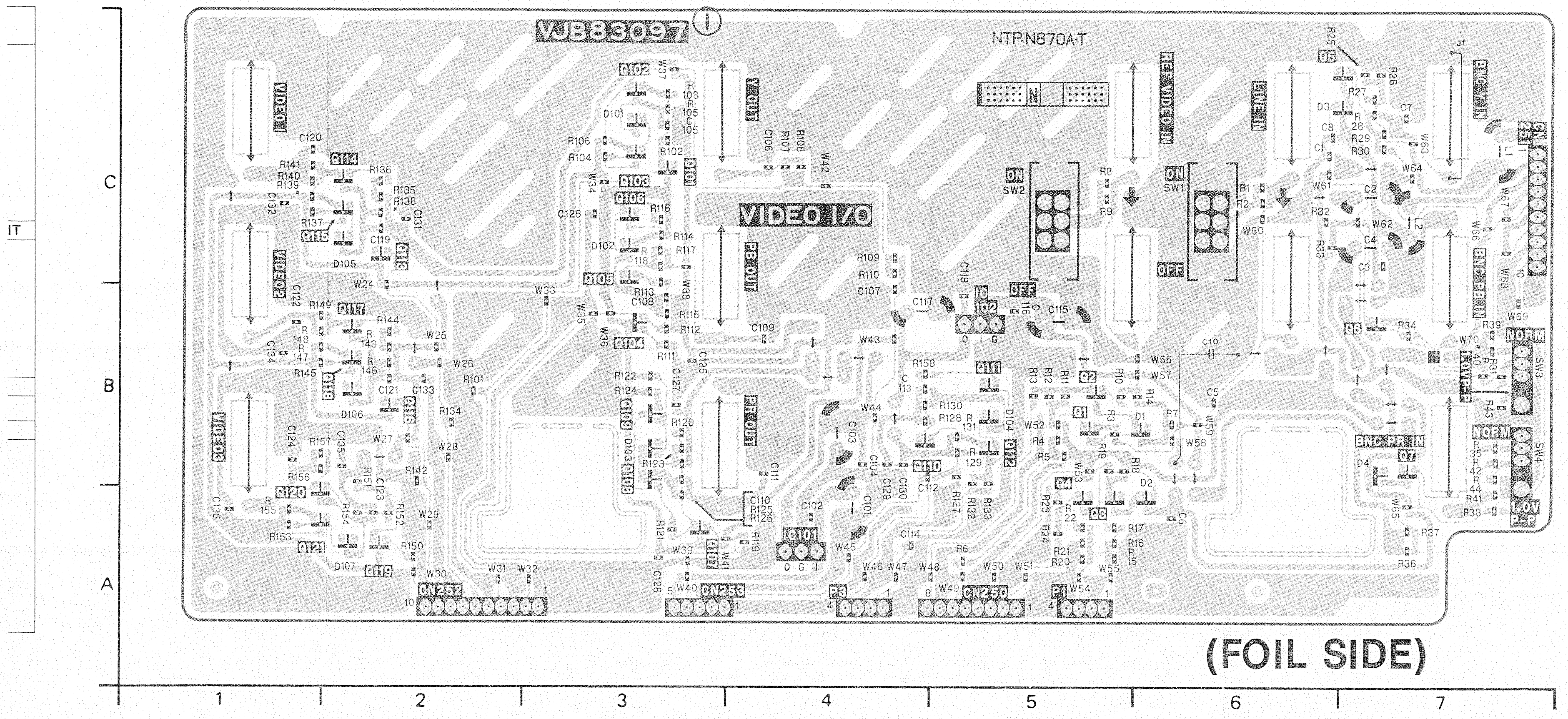

VJB83097 ①
NTP-N870A-T
VIDEO I/O
VIDEO1
VIDEO2
VIDEO3
Y OUT
PB OUT
PR OUT
REF VIDEO IN
LINE IN
BNC-Y IN
BNC-PB IN
BNC-PR IN
ON SW2
ON SW1
OFF
NORM
75Ω
CN252
CN253
CN250
P1
P3
IC101
IC102
C
B
A
1
2
3
4
5
6
7

(FOIL SIDE)

VIDEO I/O			
FOIL SIDE		INTEGRATED CIRCUIT	
TRANSISTOR		IC101	A-4
Q1	B-5	IC102	B-5
Q2	B-5	CONNECTOR	
Q3	A-5	CN250	A-5
Q4	A-5	CN251	C-7
Q5	C-7	CN252	A-2
Q6	B-7	CN253	A-3
Q7	B-7	P1	A-5
Q101	C-3	P3	A-4
Q102	C-3		
Q103	C-3		
Q104	B-3		
Q105	C-3		
Q106	C-3		
Q107	A-3		
Q108	B-3		
Q109	B-3		
Q110	B-4		
Q111	B-5		
Q112	B-5		
Q113	C-2		
Q114	C-2		
Q115	C-2		
Q116	B-2		
Q117	B-2		
Q118	B-2		
Q119	A-2		
Q120	A-1		
Q121	A-1		

ADDRESS INFORMATION

AU-65	AU-63	AU-62
ot Used	Not Used	Not Used
ot Used	Not Used	Not Used

-I4 P.C.BOARD

IL SIDE)

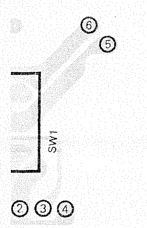

MODEL / TYPE	AU-665	AU-65	AU-63	AU-62
NTSC	VEP80621A	Not Used	Not Used	Not Used
PAL	VEP80621A	Not Used	Not Used	Not Used

VIDEO VR P.C.BOARD

(FOIL SIDE)

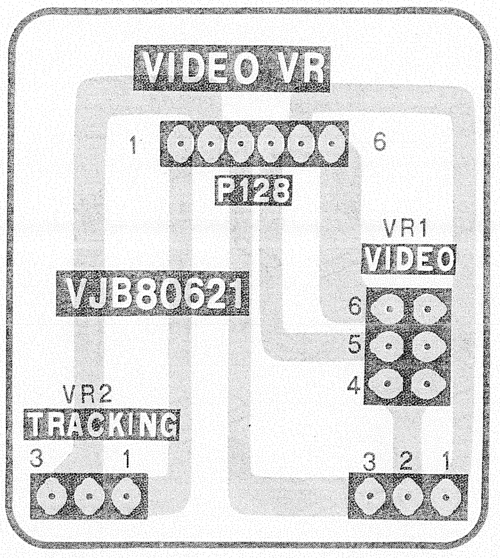

VIDEO VR
1
6
P128
VR1
VIDEO
VJB80621
6
5
4
VR2
TRACKING
3
1
3 2 1

P.C. Board Location

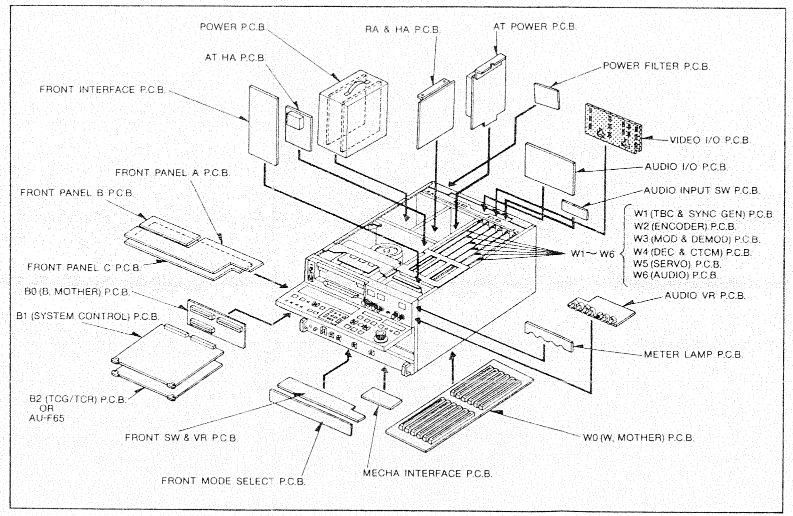

POWER P.C.B.
RA & HA P.C.B.
AT POWER P.C.B.
AT HA P.C.B.
POWER FILTER P.C.B.
FRONT INTERFACE P.C.B.
VIDEO I/O P.C.B.
AUDIO I/O P.C.B.
FRONT PANEL A P.C.B.
FRONT PANEL B P.C.B.
AUDIO INPUT SW P.C.B.
W1 (TBC & SYNC GEN) P.C.B.
W2 (ENCODER) P.C.B.
W3 (MOD & DEMOD) P.C.B.
W4 (DEC & CTCM) P.C.B.
W5 (SERVO) P.C.B.
W6 (AUDIO) P.C.B.
W1~W6
FRONT PANEL C P.C.B.
B0 (B, MOTHER) P.C.B.
B1 (SYSTEM CONTROL) P.C.B.
AUDIO VR P.C.B.
METER LAMP P.C.B.
B2 (TCG/TCR) P.C.B. OR AU-F65
FRONT SW & VR P.C.B.
W0 (W, MOTHER) P.C.B.
MECHA INTERFACE P.C.B.
FRONT MODE SELECT P.C.B.

CHIP PART INFORMATION

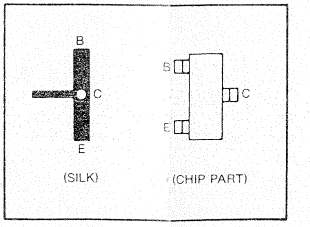

B
C
E
B
C
E
(SILK)
(CHIP PART)

50P REMOTE P.C.B

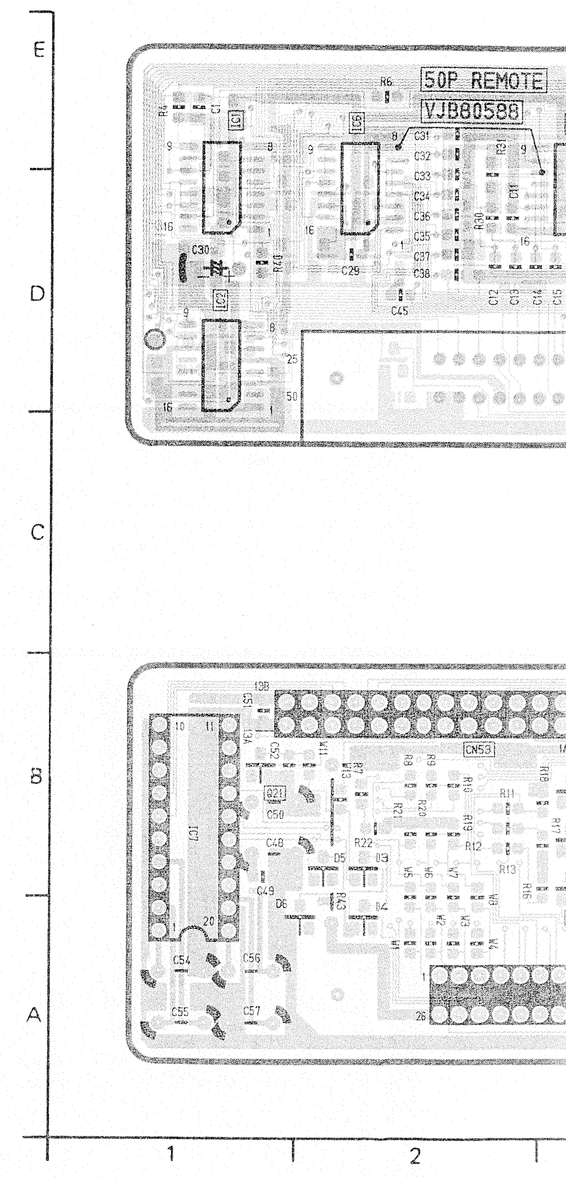

50P REMOTE
VJB80588
CN53
E
D
C
B
A
1
2

FOIL SIDE	
TRANSISTOR	
Q18	D-5
INTEGRATED CIRCUIT	
IC1	D-1
IC2	D-1
IC3	D-4
IC4	D-3
IC5	D-3
IC6	D-2
IC7	D-5
CONNECTOR	
CN53	E-4
CN361	D-3

5
CO
Q1
Q2
Q3
Q4
Q5
Q6
Q7
Q8
Q9
Q10
Q11
Q12
Q13

ADDRESS INFORMATION

This P.C.Board
P.C.Board Diagra
AU-MK25 section

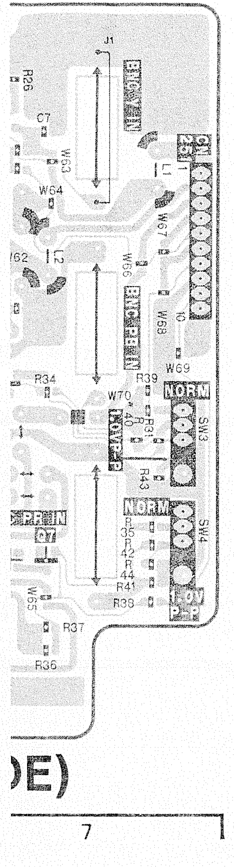
J1
R26
C7
W63
W64
W67
62
W66
W68
W69
R34
W70
R39
NORM
SW3
R43
NORM
SW4
Q7
R41
R38
W65
R37
R36
DE)
7

VIDEO I/O

FOIL SIDE		INTEGRATED CIRCUIT	
TRANSISTOR		IC101	A-4
Q1	B-5	IC102	B-5
Q2	B-5	CONNECTOR	
Q3	A-5	CN250	A-5
Q4	A-5	CN251	C-7
Q5	C-7	CN252	A-2
Q6	B-7	CN253	A-3
Q7	B-7	P1	A-5
Q101	C-3	P3	A-4
Q102	C-3		
Q103	C-3		
Q104	B-3		
Q105	C-3		
Q106	C-3		
Q107	A-3		
Q108	B-3		
Q109	B-3		
Q110	B-4		
Q111	B-5		
Q112	B-5		
Q113	C-2		
Q114	C-2		
Q115	C-2		
Q116	B-2		
Q117	B-2		
Q118	B-2		
Q119	A-2		
Q120	A-1		
Q121	A-1		

ADDRESS INFORMATION

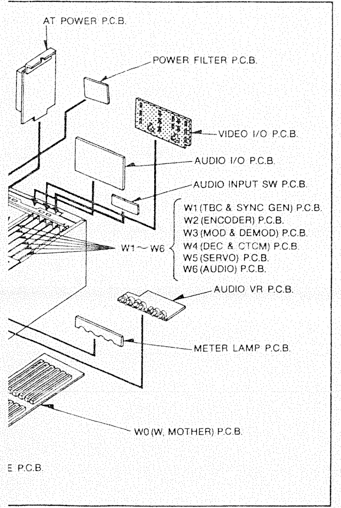
AT POWER P.C.B.
POWER FILTER P.C.B.
VIDEO I/O P.C.B.
AUDIO I/O P.C.B.
AUDIO INPUT SW P.C.B.
W1 (TBC & SYNC GEN) P.C.B.
W2 (ENCODER) P.C.B.
W3 (MOD & DEMOD) P.C.B.
W4 (DEC & CTCM) P.C.B.
W5 (SERVO) P.C.B.
W6 (AUDIO) P.C.B.
W1 ~ W6
AUDIO VR P.C.B.
METER LAMP P.C.B.
W0 (W, MOTHER) P.C.B.
E P.C.B.

CHIP PART INFORMATION

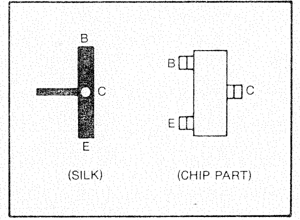
B
C
E
(SILK)
B
C
E
(CHIP PART)

MODEL / TYPE	AU-665	AU-65	AU-63	AU-62
NTSC	VEP80558A	Refer To AU-MK25 Section		
PAL	VEP80558A			

50P REMOTE P.C.BOARD

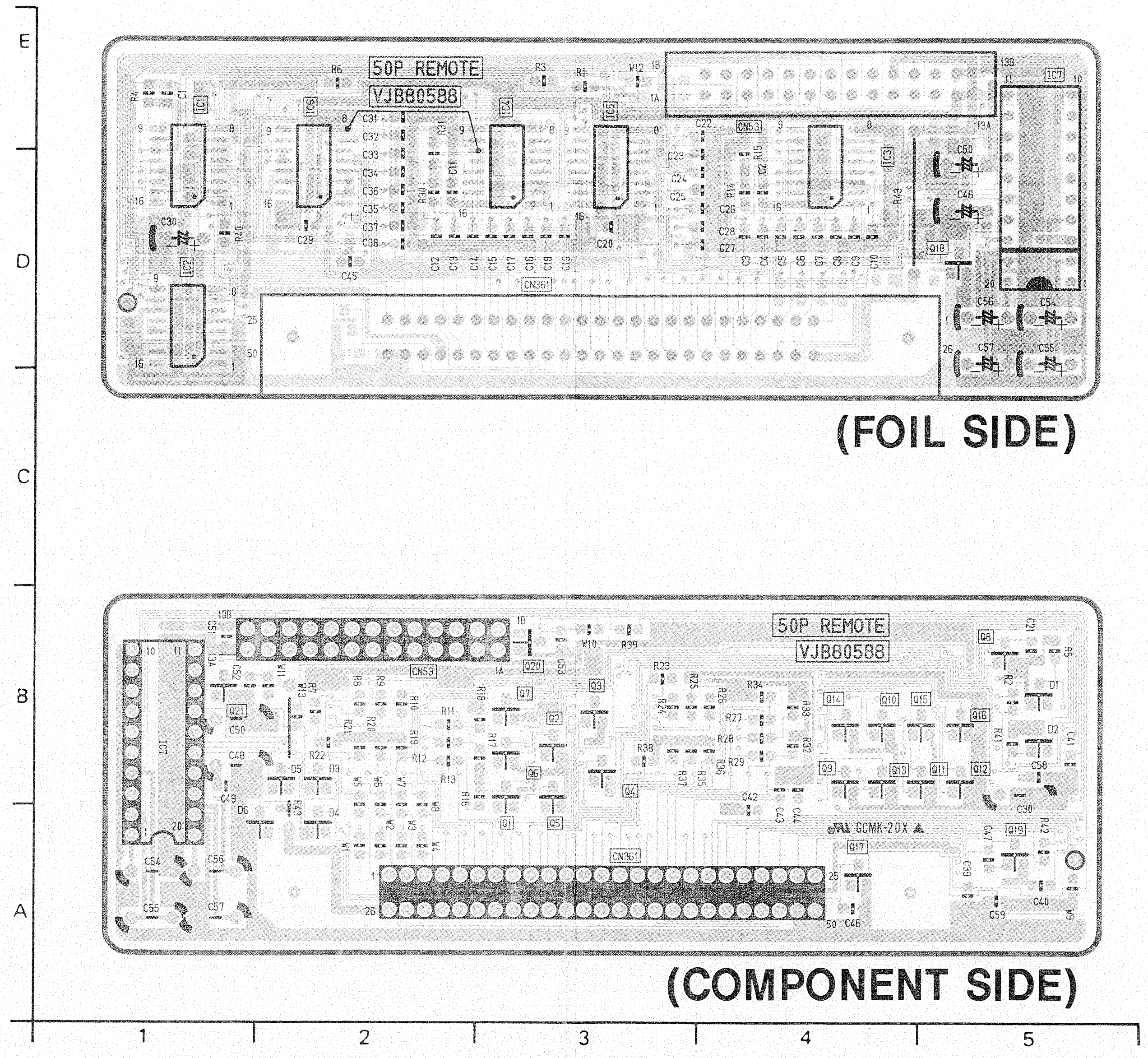
E
D
C
B
A
50P REMOTE
VJB80588
IC1
IC2
IC3
IC4
IC5
IC6
IC7
CN53
CN361
Q18
(FOIL SIDE)
50P REMOTE
VJB80588
IC1
CN53
CN361
GCMK-20X
(COMPONENT SIDE)
1
2
3
4
5

50P REMOTE

FOIL SIDE		COMPONENT SIDE			
TRANSISTOR		TRANSISTOR		Q14	B-4
Q18	D-5	Q1	B-3	Q15	B-5
INTEGRATED CIRCUIT		Q2	B-3	Q16	B-5
IC1	D-1	Q3	B-3	Q17	A-4
IC2	D-1	Q4	B-3	Q19	A-5
IC3	D-4	Q5	B-3	Q20	B-3
IC4	D-3	Q6	B-3	Q21	B-1
IC5	D-3	Q7	B-3		
IC6	D-2	Q8	B-5		
IC7	D-5	Q9	B-4		
CONNECTOR		Q10	B-4		
CN53	E-4	Q11	B-5		
CN361	D-3	Q12	B-5		
		Q13	B-4		

ADDRESS INFORMATION

This P.C.Board Diagram is used for AU-665.
P.C.Board Diagram of AU-MK25 is shown in
AU-MK25 section, page after 8-1.

MODEL / TYPE	AU-665	AU-65	AU-63	AU-62
NTSC	VEP80551B	VEP80551A	VEP80551A	VEP80551A
PAL	VEP80551B	VEP80551A	VEP80551A	VEP80551A

9P REMOTE P.C.BOARD

(FOIL SIDE)

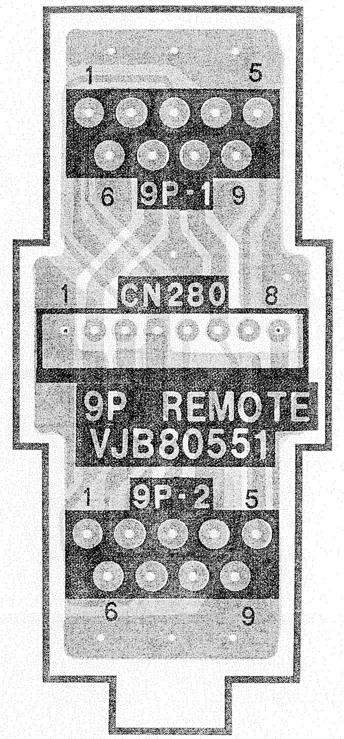
1
5
6
9P-1
9
1
CN280
8
9P REMOTE
VJB80551
1
9P-2
5
6
9

YC IN/OUT P.C.BOARD

(FOIL SIDE)

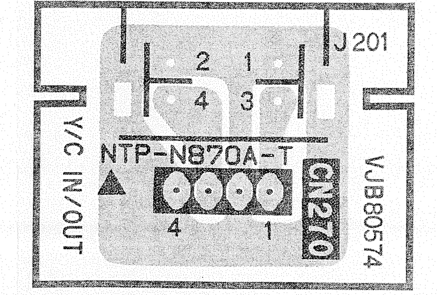
J201
2
1
4
3
Y/C IN/OUT
NTP-N870A-T
CN270
VJB80574
4
1

MODEL / TYPE	AU-665	AU-65	AU-63	AU-62
NTSC	VEP80574A	VEP80574A	VEP80574A	VEP80574A
PAL	VEP80574A	VEP80574A	VEP80574A	VEP80574A

W1(TBC & SYNC GEN) WAVEFORMS FOR NTSC

TEST POINT	TP201	TP202	TP203	TP204
VOLTS/DIV.	200mV	200mV	500mV	2V
SEC/DIV.	20usec	20usec	20usec	20usec
MODE	PLAY	PLAY	PLAY	PLAY
WAVEFORM	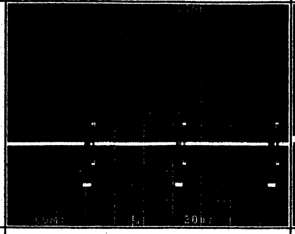	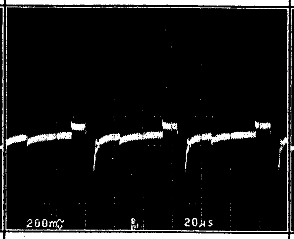	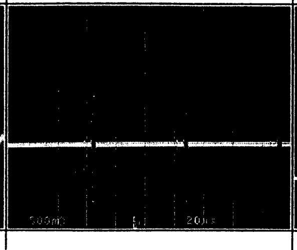	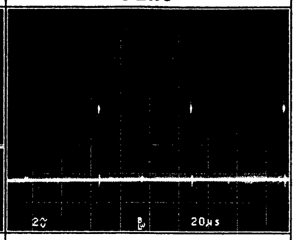

TEST POINT	TP207	TP208	TP210	TP211
VOLTS/DIV.	2V	2V	2V	2V
SEC/DIV.	100nsec	20usec	20usec	20usec
MODE	PLAY	PLAY	PLAY	PLAY
WAVEFORM	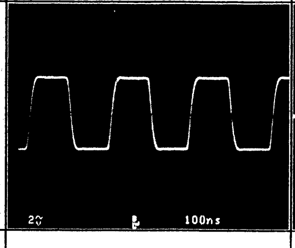	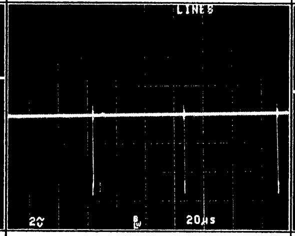	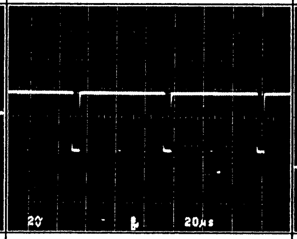	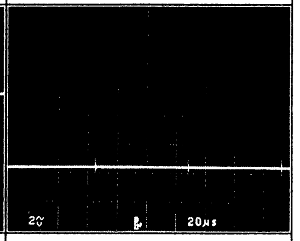

TEST POINT	TP212	TP213	TP214	TP215
VOLTS/DIV.	2V	2V	2V	2V
SEC/DIV.	20usec	5msec	10msec	10msec
MODE	PLAY	PLAY	PLAY	PLAY
WAVEFORM	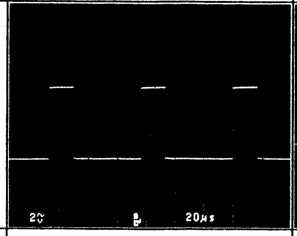	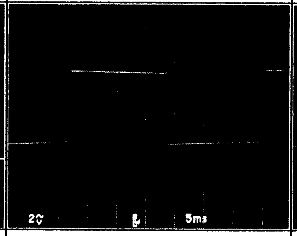	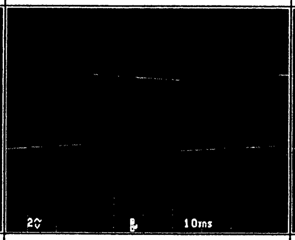	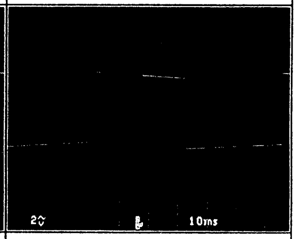

TEST POINT	TP412	TP413	TP416	TP417
VOLTS/DIV.	2V	2V	2V	2V
SEC/DIV.	20usec	20usec	20usec	20usec
MODE	PLAY	PLAY	PLAY	PLAY
WAVEFORM	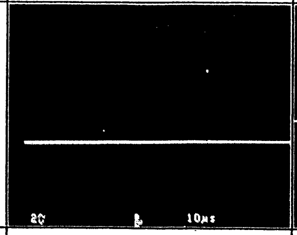	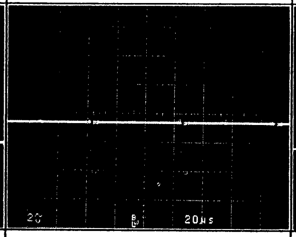	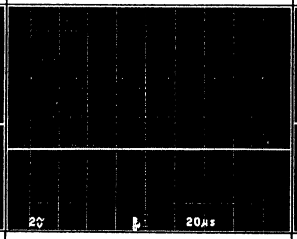	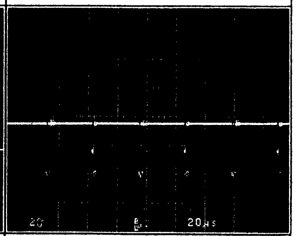

TEST POINT	TP422	TP423	TP424	TP425
VOLTS/DIV.	2V	2V	2V	2V
SEC/DIV.	20usec	20usec	20usec	50usec
MODE	PLAY	PLAY	PLAY	PLAY
WAVEFORM	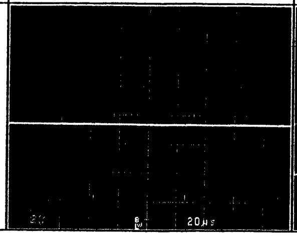	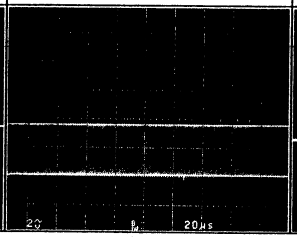	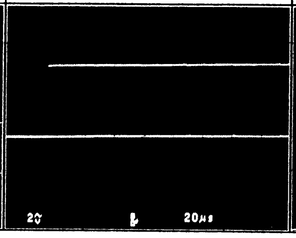	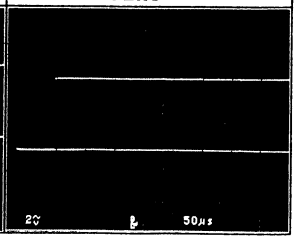

These waveforms are taken by a scope in AC mode.

W2(ENCODER) WAVEFORMS FOR NTSC

TEST POINT	TP1	TP2	TP3	TP4
VOLTS/DIV.	500mV	500mV	1V	500mV
SEC/DIV.	20usec	10usec	20usec	10usec
MODE	PLAY	PLAY	PLAY	PLAY
WAVEFORM	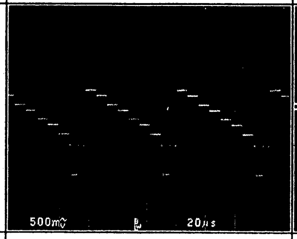	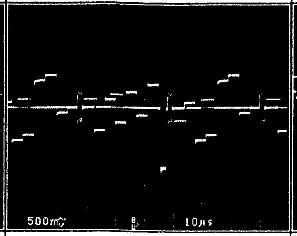	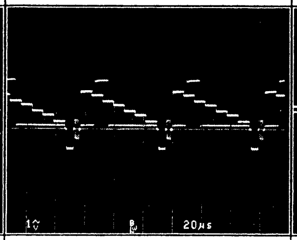	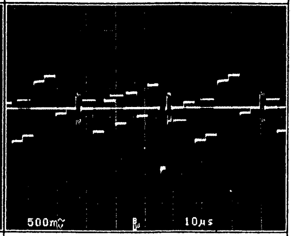

TEST POINT	TP6	TP7	TP201	TP202
VOLTS/DIV.	200mV	100mV	500mV	1V
SEC/DIV.	20usec	10usec	20usec	20usec
MODE	PLAY	PLAY	PLAY	PLAY
WAVEFORM	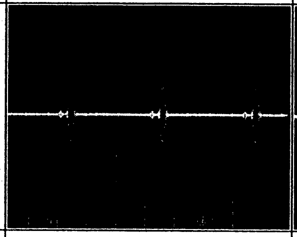	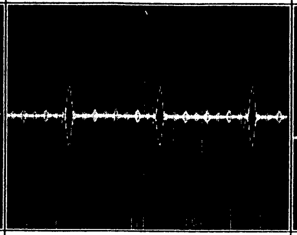	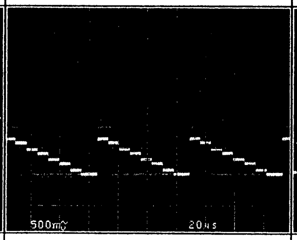	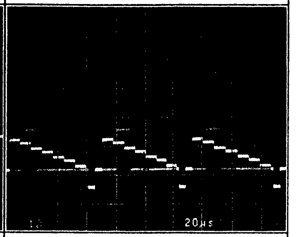

TEST POINT	TP203	TP204	TP206	TP501
VOLTS/DIV.	500mV	500mV	500mV	500mV
SEC/DIV.	20usec	20usec	20usec	20usec
MODE	PLAY	PLAY	PLAY	PLAY
WAVEFORM	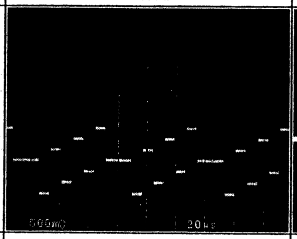	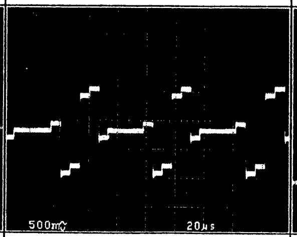	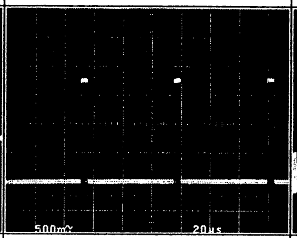	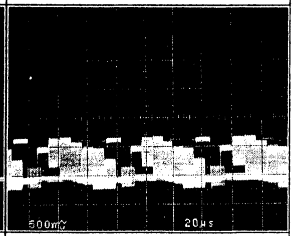

TEST POINT	TP502	TP503	TP505	TP506
VOLTS/DIV.	200mV	200mV	1V	500mV
SEC/DIV.	20usec	20usec	20usec	20usec
MODE	PLAY	PLAY	PLAY	PLAY
WAVEFORM	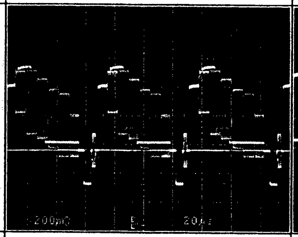	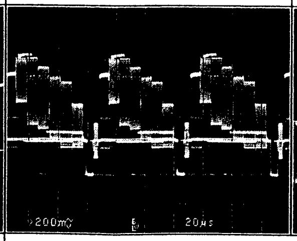	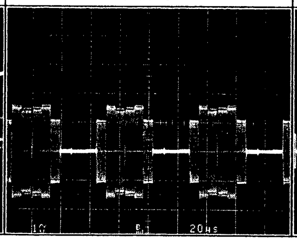	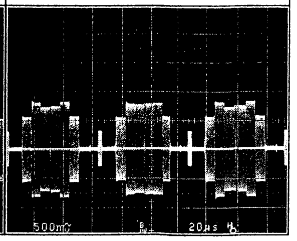

TEST POINT	TP507
VOLTS/DIV.	1V
SEC/DIV.	20usec
MODE	PLAY
WAVEFORM	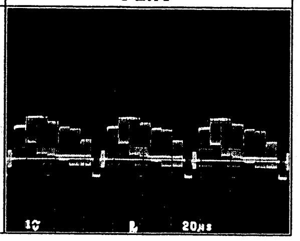

These waveforms are taken by a scope in AC mode.

TP4
500mV
10usec
PLAY
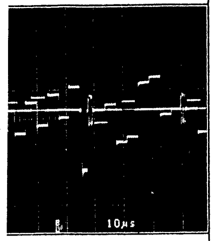
TP202
1V
20usec
PLAY
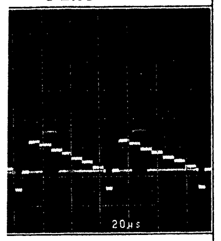
TP501
500mV
20usec
PLAY
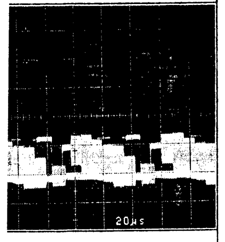
TP506
500mV
20usec
PLAY
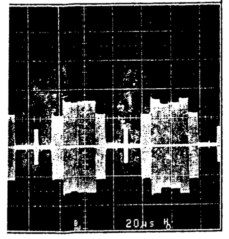

W3(MOD & DEMOD) WAVEFORMS FOR NTSC

TEST POINT	TP1	TP3	TP5	TP6
VOLTS/DIV.	1V	100mV	200mV	100mV
SEC/DIV.	20usec	20usec	20usec	20usec
MODE	REC	REC	REC	REC
WAVEFORM	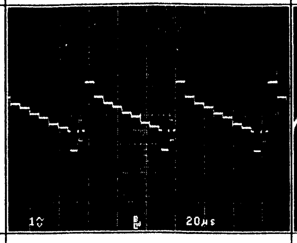	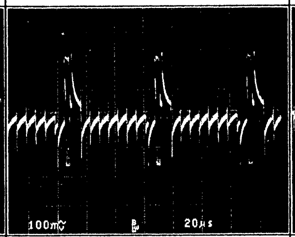	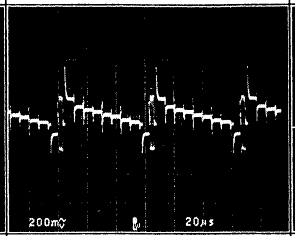	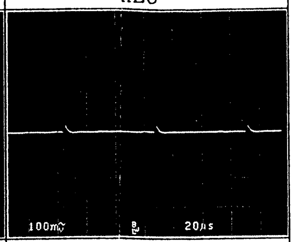

TEST POINT	TP7	TP8	TP201	TP203
VOLTS/DIV.	100mV	50mV	1V	100mV
SEC/DIV.	50usec	20usec	20usec	10usec
MODE	REC	REC	REC	REC
WAVEFORM	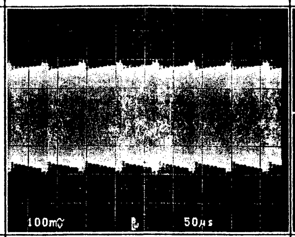	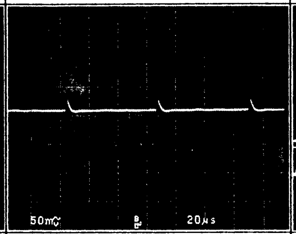	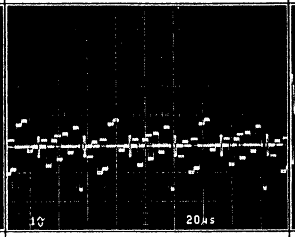	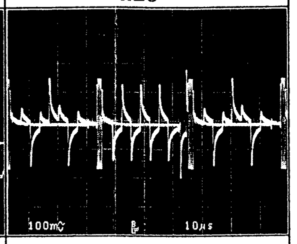

TEST POINT	TP204	TP205	TP207	TP301
VOLTS/DIV.	50mV	200mV	200mV	100mV
SEC/DIV.	20usec	10usec	20usec	20usec
MODE	REC	REC	REC	PLAY
WAVEFORM	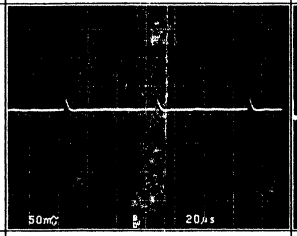	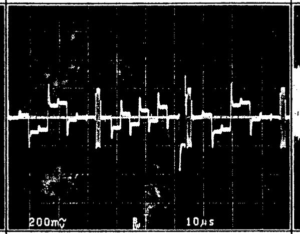	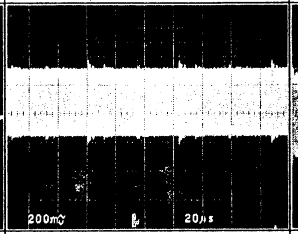	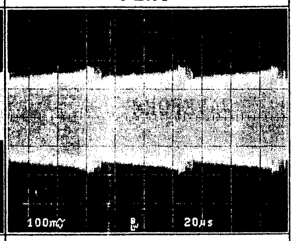

TEST POINT	TP302	TP307	TP309	TP310
VOLTS/DIV.	50mV	100mV	1V	100mV
SEC/DIV.	20usec	5msec	20usec	20usec
MODE	PLAY	PLAY	PLAY	PLAY
WAVEFORM	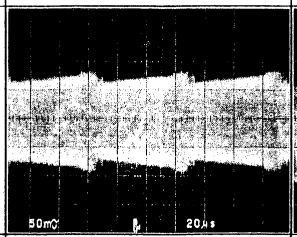	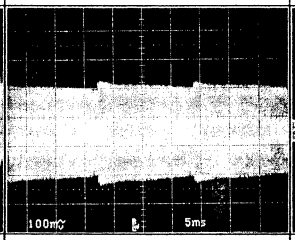	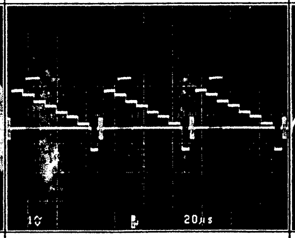	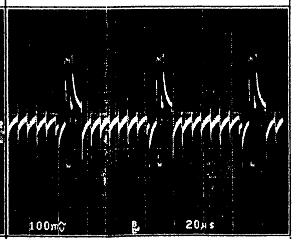

TEST POINT	TP311	TP316	TP701	TP702
VOLTS/DIV.	500mV	100mV	200mV	100mV
SEC/DIV.	20usec	20usec	10usec	20usec
MODE	PLAY	PLAY	PLAY	PLAY
WAVEFORM	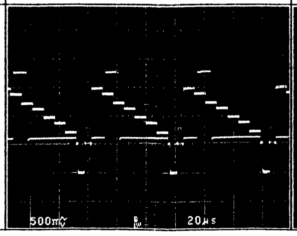	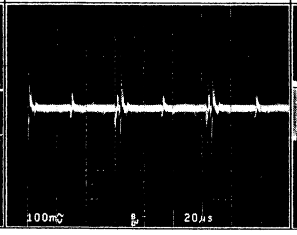	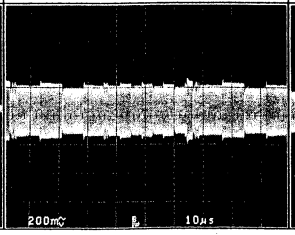	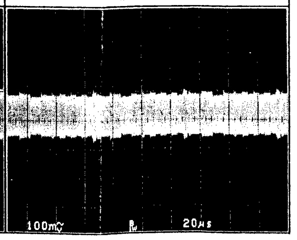

TEST POINT	TP703	TP706	TP707	TP708
VOLTS/DIV.	100mV	1V	100mV	500mV
SEC/DIV.	5usec	10usec	10usec	10usec
MODE	PLAY	PLAY	PLAY	PLAY
WAVEFORM	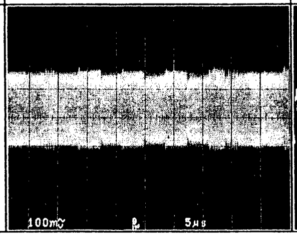	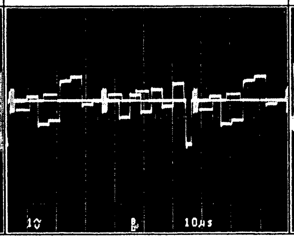	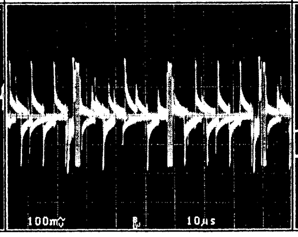	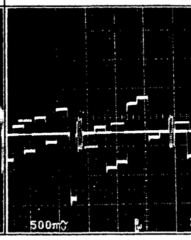

These waveforms are taken by a scope in AC mode.

W4(DECODER & CTCM) WAVEFORMS FOR NTSC

TEST POINT	TP3	TP202	TP203	TP204
VOLTS/DIV.	500mV	500mV	100mV	50mV
SEC/DIV.	20usec	20usec	20usec	20usec
MODE	REC	REC	REC	REC
WAVEFORM	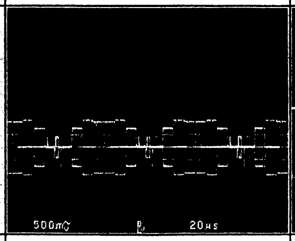	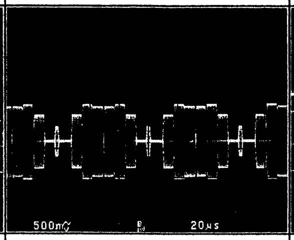	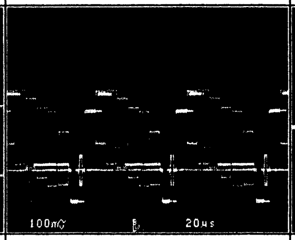	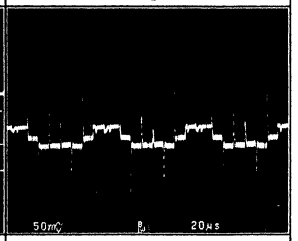

TEST POINT	TP205	TP206	TP401	TP403
VOLTS/DIV.	500mV	200mV	2V	2V
SEC/DIV.	20usec	20usec	10msec	10msec
MODE	REC	REC	REC	REC
WAVEFORM	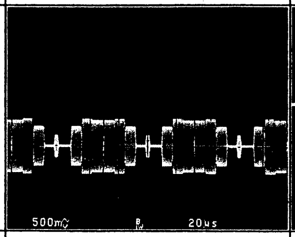	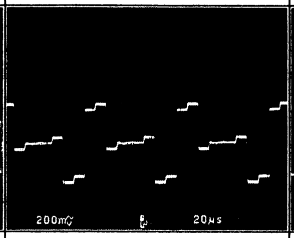	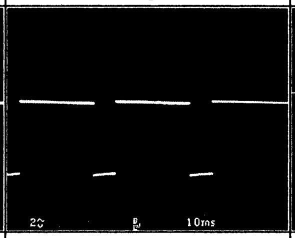	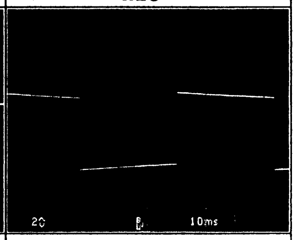

TEST POINT	TP501	TP502	TP504	TP601
VOLTS/DIV.	200mV	200mV	200mV	200mV
SEC/DIV.	20usec	20usec	20usec	10usec
MODE	REC	REC	REC	REC
WAVEFORM	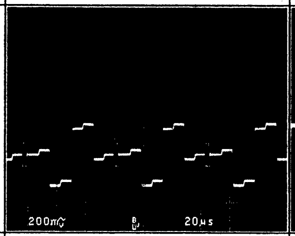	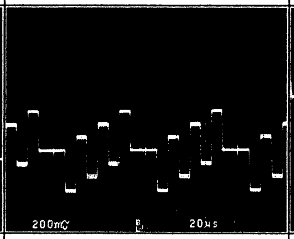	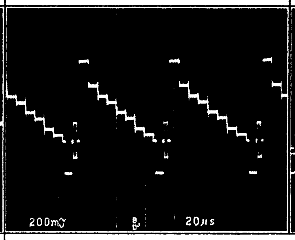	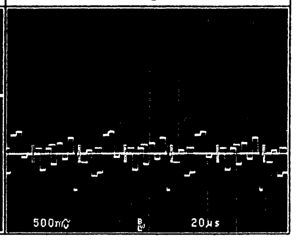

TEST POINT	TP703	TP704
VOLTS/DIV.	2V	2V
SEC/DIV.	20usec	1usec
MODE	REC	REC
WAVEFORM	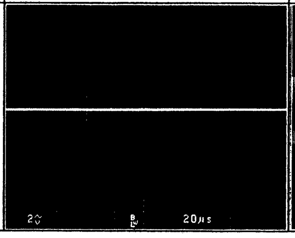	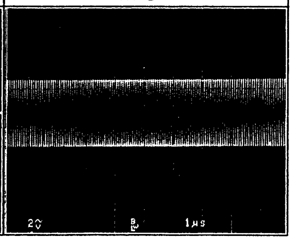

These waveforms are taken by a scope in AC mode.

W5(SERVO) WAVEFORMS FOR NTSC

TEST POINT	TP3	TP4	TP5	TP6
VOLTS/DIV.	2V	2V	2V	2V
SEC/DIV.	5msec	5msec	5msec	5msec
MODE	PLAY	PLAY	PLAY	PLAY
WAVEFORM	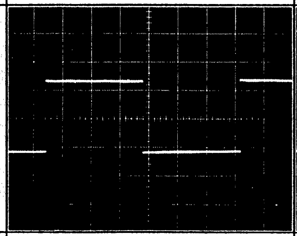	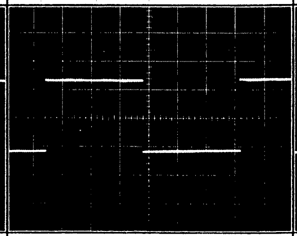	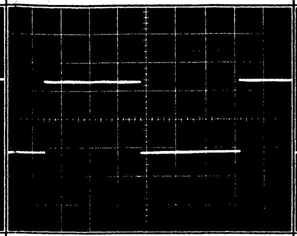	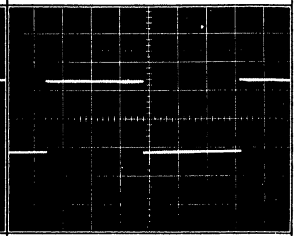

TEST POINT	TP7	TP13	TP15	TP17
VOLTS/DIV.	2V	2V	2V	2V
SEC/DIV.	5msec	20usec	5msec	5msec
MODE	PLAY	PLAY	PLAY	PLAY
WAVEFORM	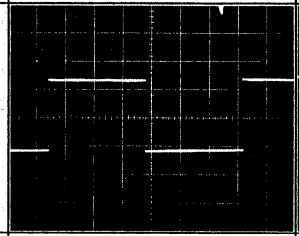	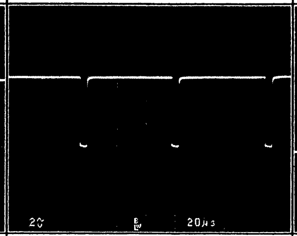	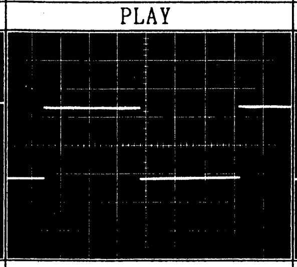	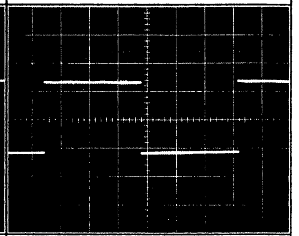

TEST POINT	TP102	TP104	TP105	TP109
VOLTS/DIV.	2V	2V	2V	1V
SEC/DIV.	10msec	100usec	5msec	5msec
MODE	PLAY	PLAY	PLAY	PLAY
WAVEFORM	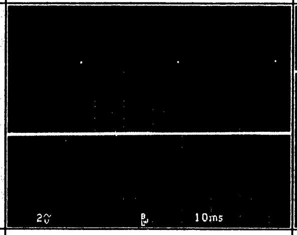	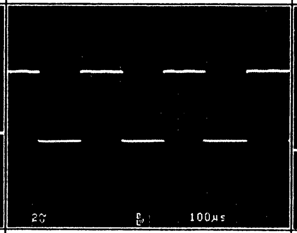	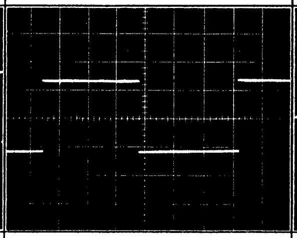	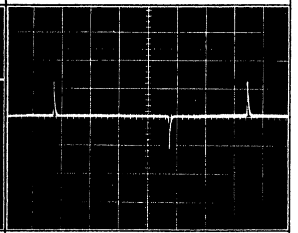

TEST POINT	TP110	TP113	TP114	TP115
VOLTS/DIV.	2V	5V	2V	2V
SEC/DIV.	5msec	500usec	100usec	100usec
MODE	PLAY	PLAY	PLAY	PLAY
WAVEFORM	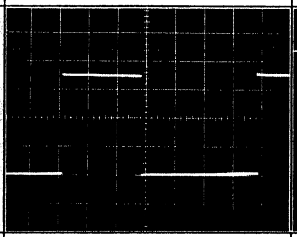	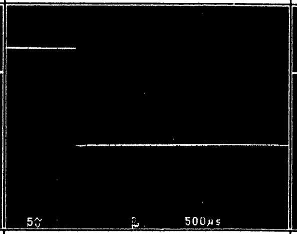	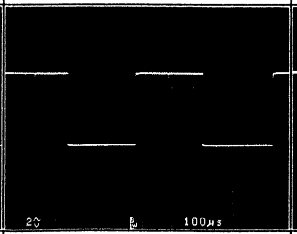	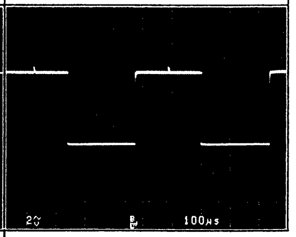

TEST POINT	TP118	TP201	TP202
VOLTS/DIV.	5V	2V	2V
SEC/DIV.	20msec	2msec	2msec
MODE	PLAY	PLAY	PLAY
WAVEFORM	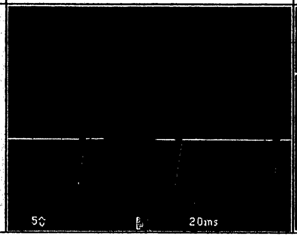	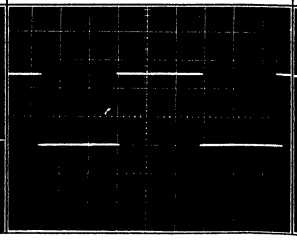	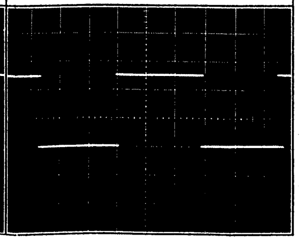

These waveforms are taken by a scope in AC mode.

W6(AU

TEST POI
VOLTS/DI
SEC/DIV
MODE
WAVEFOR

TEST POI
VOLTS/DI
SEC/DIV
MODE
WAVEFOR

TEST POI
VOLTS/DI
SEC/DIV
MODE
WAVEFOR

TEST POI
VOLTS/DI
SEC/DIV
MODE
WAVEFOR

TEST POI
VOLTS/DI
SEC/DIV.
MODE
WAVEFOR

W6(AUDIO) WAVEFORMS FOR NTSC

TEST POINT	TP101	TP102	TP201	TP301
VOLTS/DIV.	200mV	200mV	500mV	200mV
SEC/DIV.	200usec	200usec	200usec	200usec
MODE	PLAY	PLAY	REC	PLAY
WAVEFORM	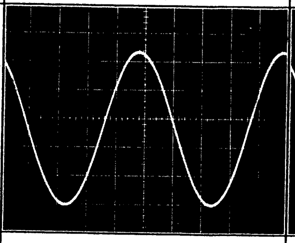	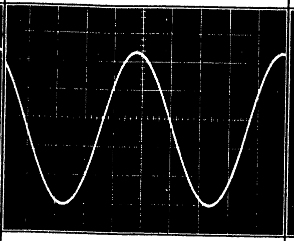	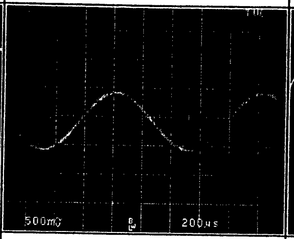	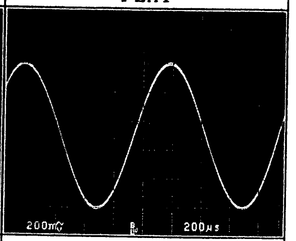

TEST POINT	TP302	TP401	TP551	TP552
VOLTS/DIV.	200mV	500mV	200mV	200mV
SEC/DIV.	200usec	200usec	5usec	5usec
MODE	PLAY	REC	REC	REC
WAVEFORM	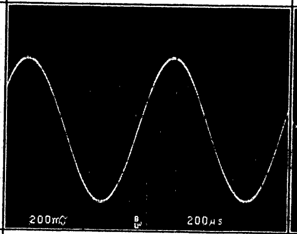	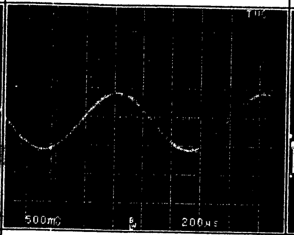	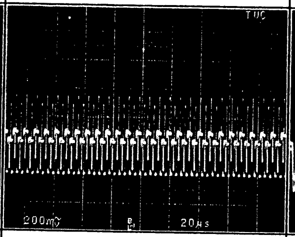	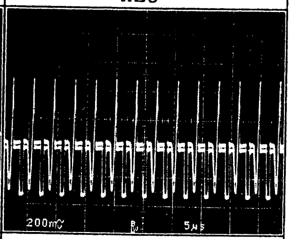

TEST POINT	TP553	TP554	TP555	TP556
VOLTS/DIV.	200mV	200mV	200mV	200mV
SEC/DIV.	5usec	5usec	5usec	5usec
MODE	REC	REC	REC	REC
WAVEFORM	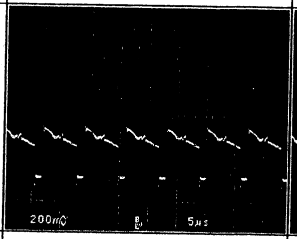	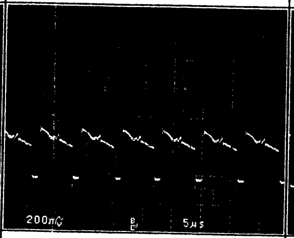	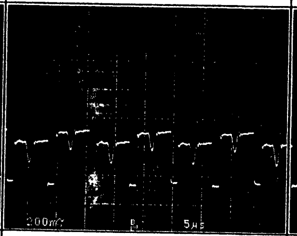	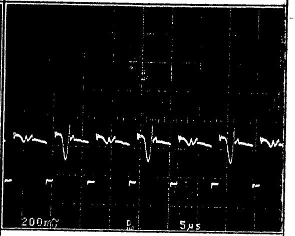

TEST POINT	TP557	TP558	TP601	TP602
VOLTS/DIV.	200mV	200mV	50mV	200mV
SEC/DIV.	5usec	5usec	20usec	20usec
MODE	REC	REC	REC	REC
WAVEFORM	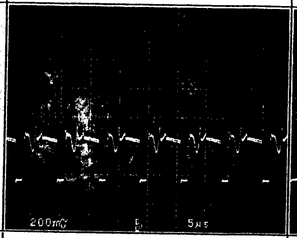	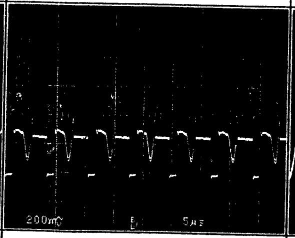	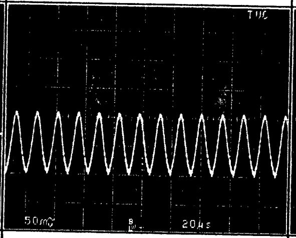	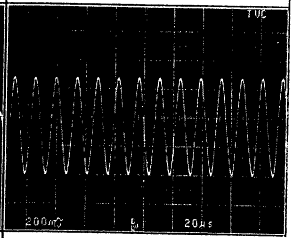

TEST POINT	TP603	TP604	TP605	TP606
VOLTS/DIV.	50mV	200mV	50mV	200mV
SEC/DIV.	20usec	20usec	20usec	20usec
MODE	REC	REC	REC	REC
WAVEFORM	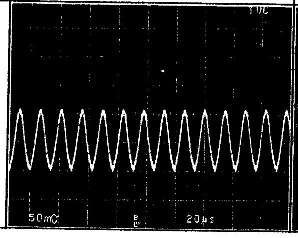	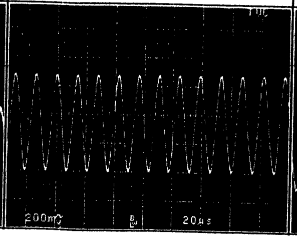	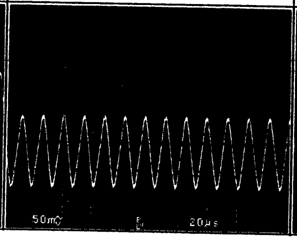	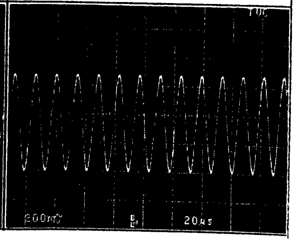

TEST POINT	TP607	TP608	TP609	TP702
VOLTS/DIV.	50mV	200mV	200mV	200mV
SEC/DIV.	20usec	20usec	20usec	500usec
MODE	REC	REC	REC	PLAY
WAVEFORM	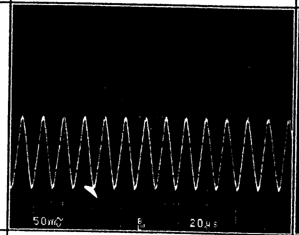	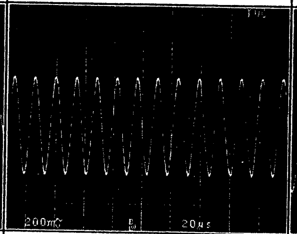	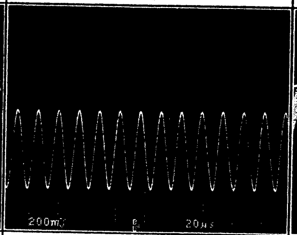	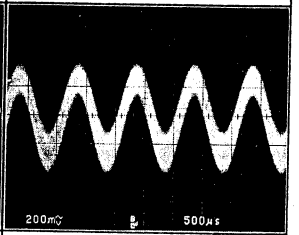

TEST POINT	TP703	TP704	TP802	TP803
VOLTS/DIV.	20mV	200mV	200mV	20mV
SEC/DIV.	5msec	20usec	500usec	5usec
MODE	PLAY	REC	PLAY	PLAY
WAVEFORM	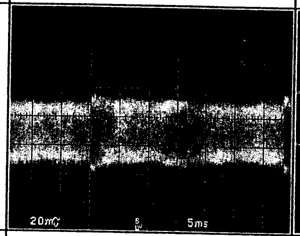	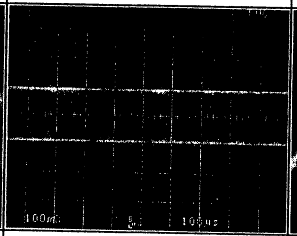	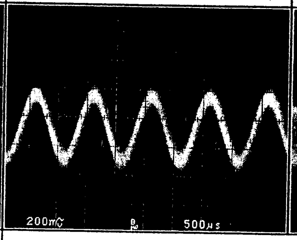	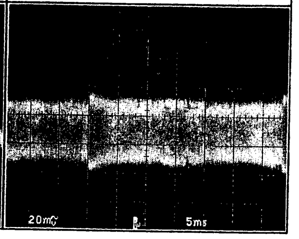

TEST POINT	TP804	TP901
VOLTS/DIV.	200mV	2V
SEC/DIV.	20usec	5msec
MODE	REC	PLAY
WAVEFORM	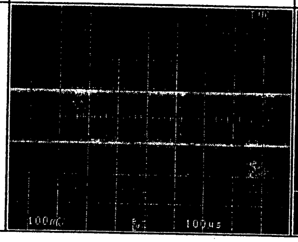	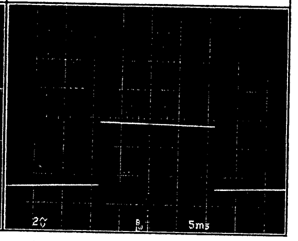

These waveforms are taken by a scope in AC mode.

B2(TC & BB) WAVEFORMS FOR NTSC

TEST POINT	TP1	TP2	TP3	TP4
VOLTS/DIV.	1V	1V	500mV	1V
SEC/DIV.	5usec	5usec	2msec	200usec
MODE	PLAY	PLAY	PLAY	PLAY
WAVEFORM	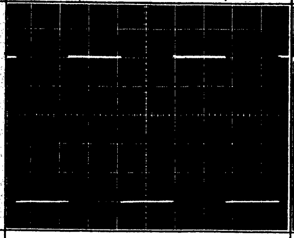	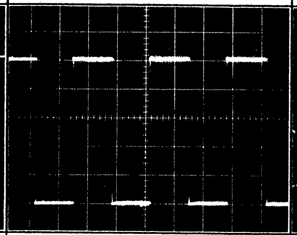	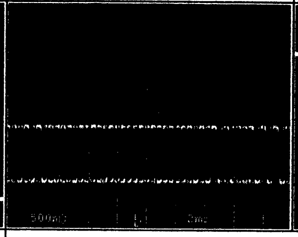	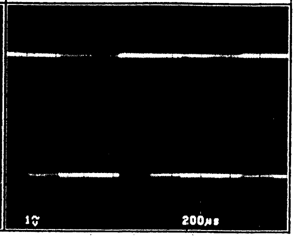

TEST POINT	TP5	TP6
VOLTS/DIV.	2V	1V
SEC/DIV.	20usec	500usec
MODE	PLAY	PLAY
WAVEFORM	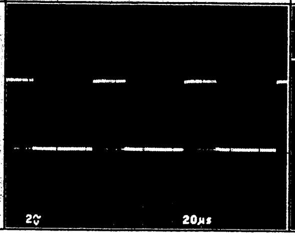	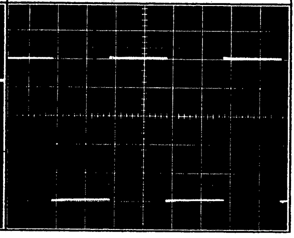

These waveforms are taken by a scope in AC mode.

RA & HA WAVEFORMS FOR NTSC

TEST POINT	TP7	TP8	TP201	TP202
VOLTS/DIV.	200mV	200mV	200mV	200mV
SEC/DIV.	10msec	10msec	10msec	10msec
MODE	VIDEO INSERT	VIDEO INSERT	PLAY	PLAY
WAVEFORM	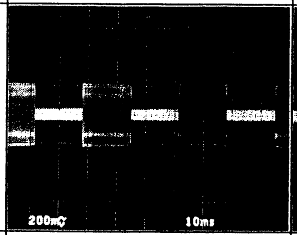	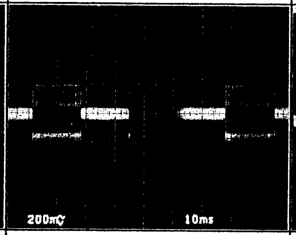	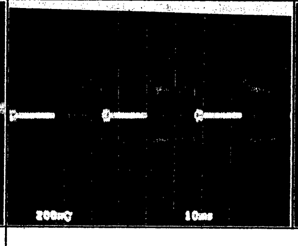	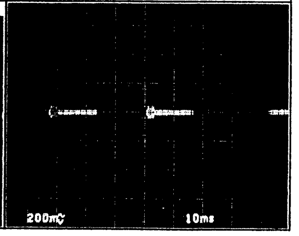

TEST POINT	TP203	TP204
VOLTS/DIV.	200mV	200mV
SEC/DIV.	10msec	10msec
MODE	PLAY	PLAY
WAVEFORM	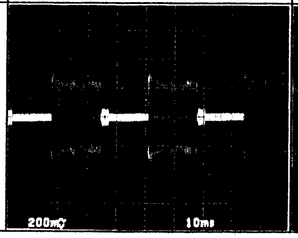	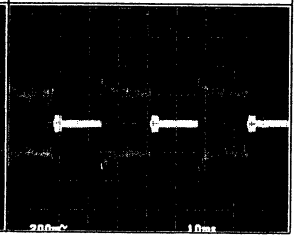

These waveforms are taken by a scope in AC mode.

AT POWER WAVEFORMS FOR NTSC

TEST POINT	TP1	TP2	TP3	TP4
VOLTS/DIV.	500mV	500mV	200mV	200mV
SEC/DIV.	10msec	10usec	10msec	10nsec
MODE	PLAY	PLAY	PLAY	PLAY
WAVEFORM	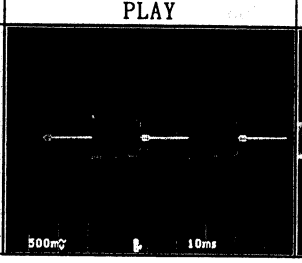	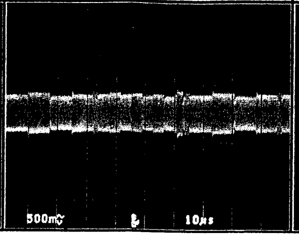	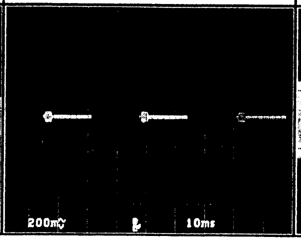	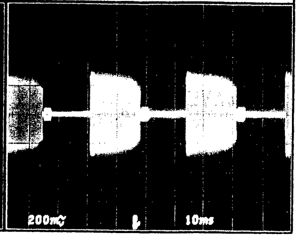

These waveforms are taken by a scope in AC mode.

W1(TBC & SYNC GEN) WAVEFORMS FOR PAL

TP4
200mV
10nsec
PLAY
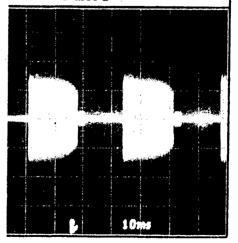

TEST POINT	TP201	TP202	TP203	TP204
VOLTS/DIV.	200mV	V	500mV	100mV
SEC/DIV.	20usec	usec	20usec	20usec
MODE	PLAY	PLAY	PLAY	PLAY
WAVEFORM	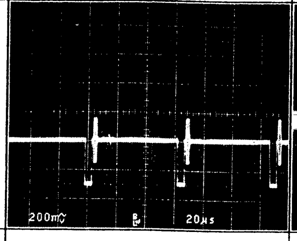	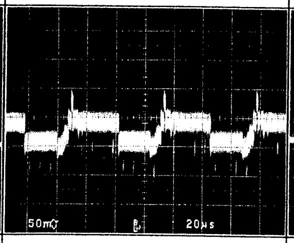	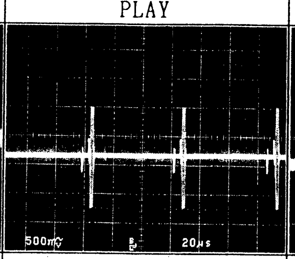	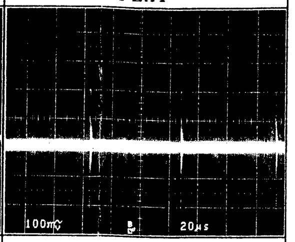

TEST POINT	TP207	TP208	TP210	TP211
VOLTS/DIV.	2V	500mV	2V	2V
SEC/DIV.	100usec	100usec	20usec	20usec
MODE	PLAY	PLAY	PLAY	PLAY
WAVEFORM	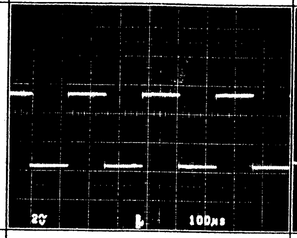	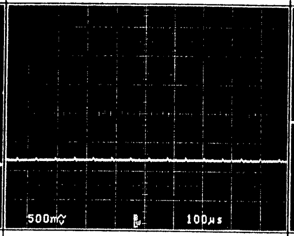	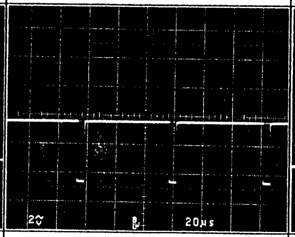	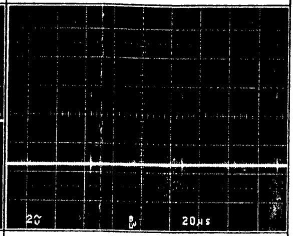

TEST POINT	TP212	TP213	TP214	TP215
VOLTS/DIV.	2V	2V	2V	2V
SEC/DIV.	20usec	10msec	20msec	20msec
MODE	PLAY	PLAY	PLAY	PLAY
WAVEFORM	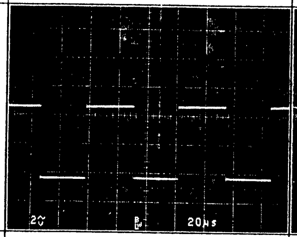	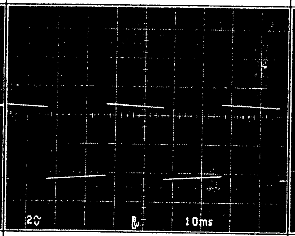	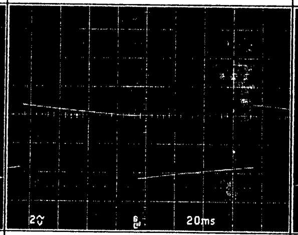	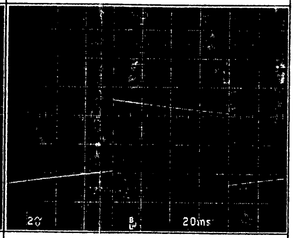

TEST POINT	TP412	TP413	TP416	TP417
VOLTS/DIV.	2V	2V	2V	2V
SEC/DIV.	20usec	20usec	20usec	20usec
MODE	PLAY	PLAY	PLAY	PLAY
WAVEFORM	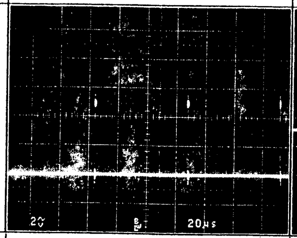	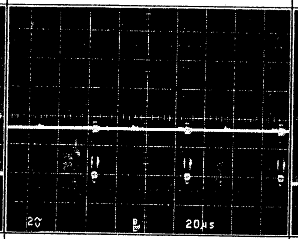	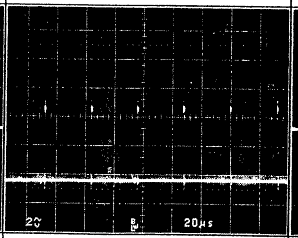	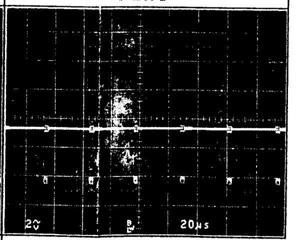

TEST POINT	TP422	TP423	TP424	TP425
VOLTS/DIV.	2V	2V	2V	2V
SEC/DIV.	20usec	20usec	20usec	50usec
MODE	PLAY	PLAY	PLAY	PLAY
WAVEFORM	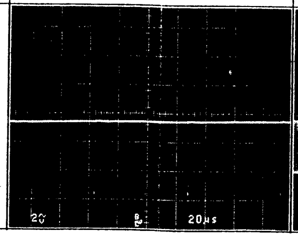	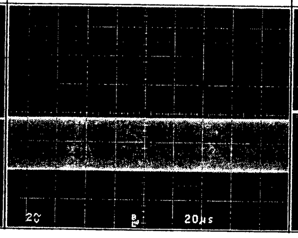	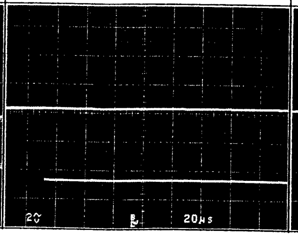	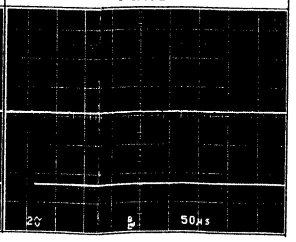

TEST POINT	TP426	TP427
VOLTS/DIV.	2V	2V
SEC/DIV.	20usec	50usec
MODE	PLAY	PLAY
WAVEFORM	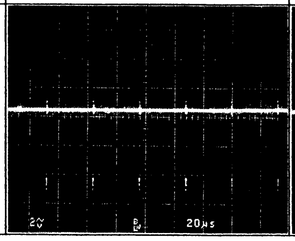	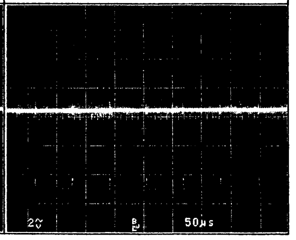

These waveforms are taken by a scope in AC mode.

W2(ENCODER) WAVEFORMS FOR PAL

TEST POINT	TP1	TP2	TP3	TP4
VOLTS/DIV.	500mV	500mV	1V	1V
SEC/DIV.	20usec	10usec	20usec	10usec
MODE	PLAY	PLAY	PLAY	PLAY
WAVEFORM	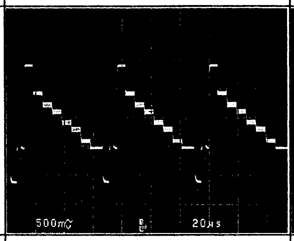	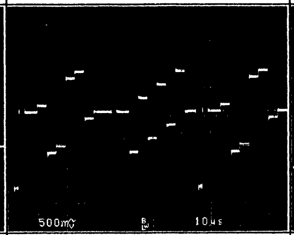	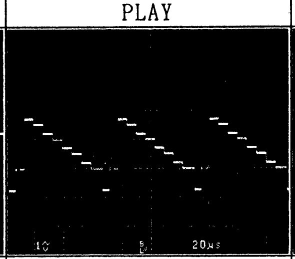	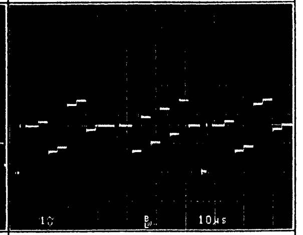
TEST POINT	TP6	TP7	TP201	TP202
VOLTS/DIV.	200mV	100mV	500mV	500mV
SEC/DIV.	20usec	20usec	20usec	20usec
MODE	PLAY	PLAY	PLAY	PLAY
WAVEFORM	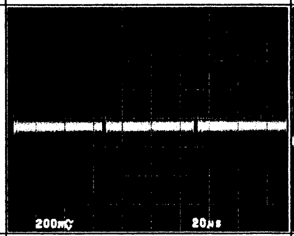	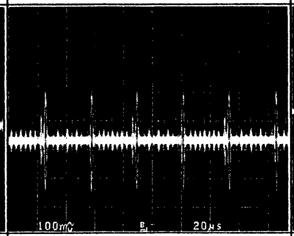	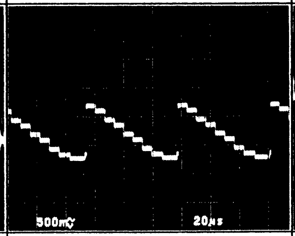	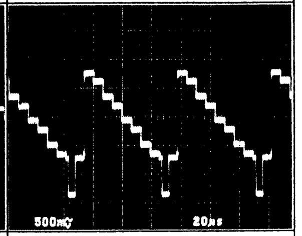
TEST POINT	TP203	TP204	TP206	TP501
VOLTS/DIV.	500mV	500mV	500mV	500mV
SEC/DIV.	20usec	20usec	20usec	20usec
MODE	PLAY	PLAY	PLAY	PLAY
WAVEFORM	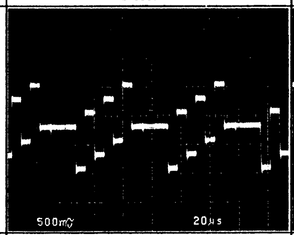	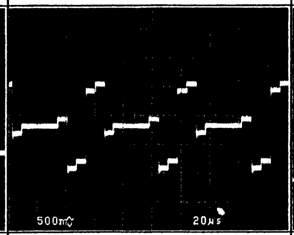	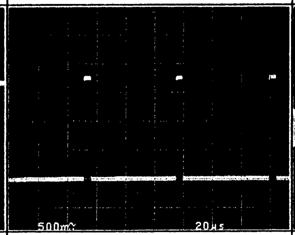	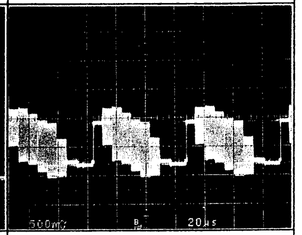
TEST POINT	TP502	TP503	TP505	TP506
VOLTS/DIV.	1V	1V	1V	500mV
SEC/DIV.	20usec	20usec	20usec	20usec
MODE	PLAY	PLAY	PLAY	PLAY
WAVEFORM	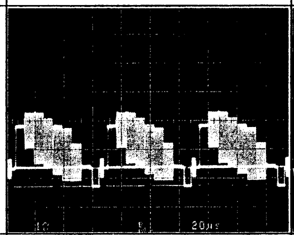	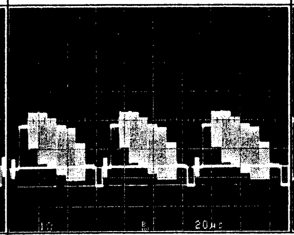	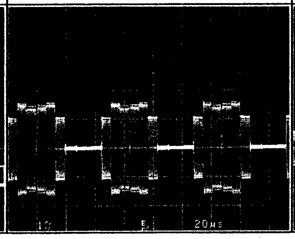	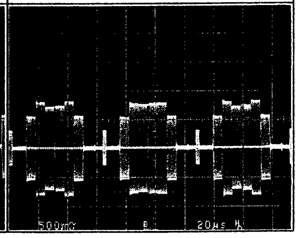

TEST POINT	TP507
VOLTS/DIV.	1V
SEC/DIV.	20usec
MODE	PLAY
WAVEFORM	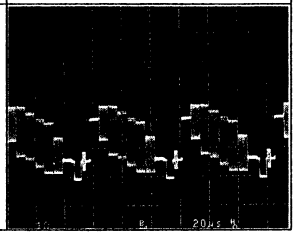

These waveforms are taken by a scope in AC mode.

W3(MOD & DEMOD) WAVEFORMS FOR PAL

TEST POINT	TP1	TP3	TP4	TP5
VOLTS/DIV.	500mV	100mV	500mV	200mV
SEC/DIV.	20usec	20usec	20usec	20usec
MODE	REC	REC	REC	REC
WAVEFORM	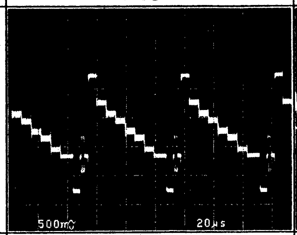	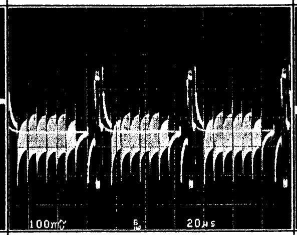	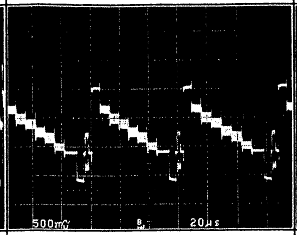	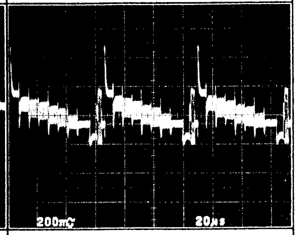
TEST POINT	TP6	TP7	TP8	TP201
VOLTS/DIV.	200mV	200mV	200mV	500mV
SEC/DIV.	20usec	50usec	20usec	20usec
MODE	REC	REC	REC	REC
WAVEFORM	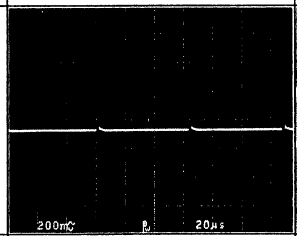	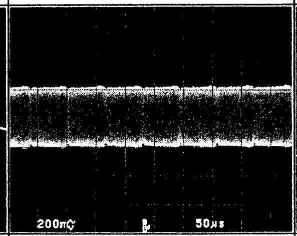	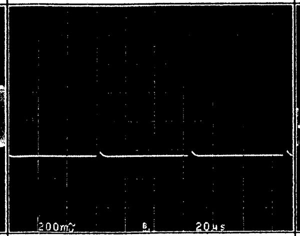	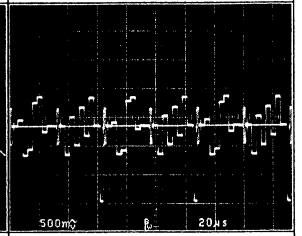
TEST POINT	TP202	TP203	TP204	TP205
VOLTS/DIV.	500mV	200mV	200mV	200mV
SEC/DIV.	20usec	10usec	20usec	20usec
MODE	REC	REC	REC	REC
WAVEFORM	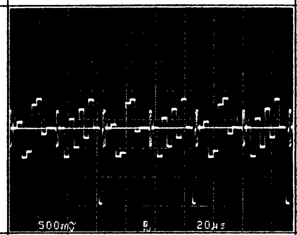	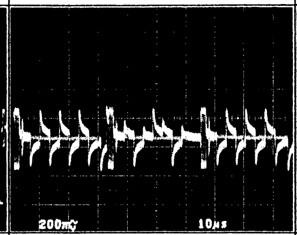	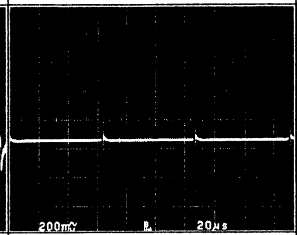	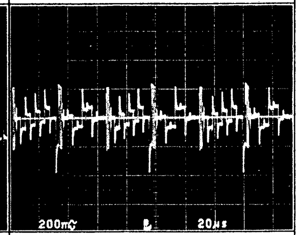
TEST POINT	TP207	TP301	TP302	TP307
VOLTS/DIV.	100mV	200mV	100mV	100mV
SEC/DIV.	20usec	10usec	20usec	20usec
MODE	REC	PLAY	PLAY	PLAY
WAVEFORM	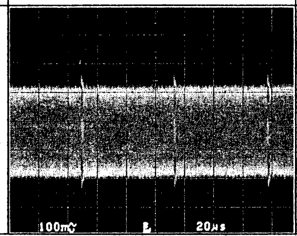	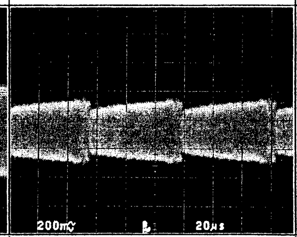	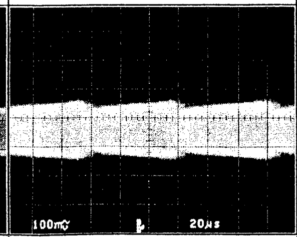	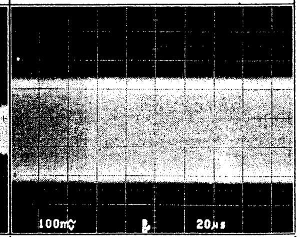
TEST POINT	TP308	TP309	TP310	TP311
VOLTS/DIV.	50mV	1V	100mV	1V
SEC/DIV.	20usec	20usec	20usec	20usec
MODE	PLAY	PLAY	PLAY	PLAY
WAVEFORM	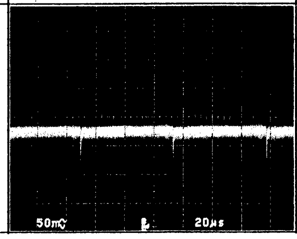	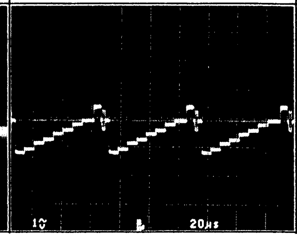	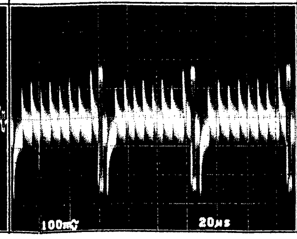	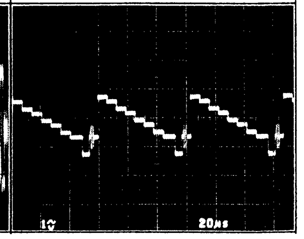

TEST POINT	
VOLTS/DIV.	
SEC/DIV.	
MODE	
WAVEFORM	
TEST POINT	
VOLTS/DIV.	
SEC/DIV.	
MODE	
WAVEFORM	
TEST POINT	
VOLTS/DIV.	
SEC/DIV.	
MODE	
WAVEFORM	
TEST POINT	
VOLTS/DIV.	
SEC/DIV.	
MODE	
WAVEFORM	

These wavefor

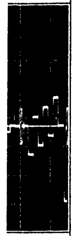

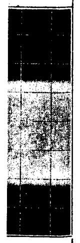

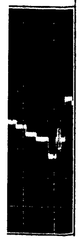

TEST POINT	TP312	TP313	TP316	TP317
VOLTS/DIV.	500mV	500mV	100mV	200mV
SEC/DIV.	20usec	20usec	20usec	10msec
MODE	PLAY	PLAY	PLAY	PLAY
WAVEFORM	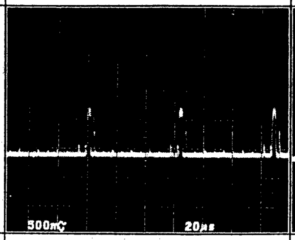	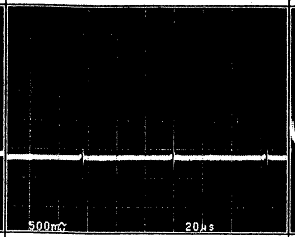	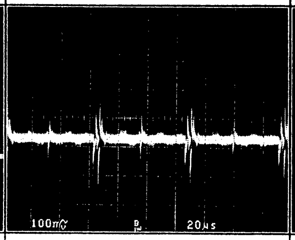	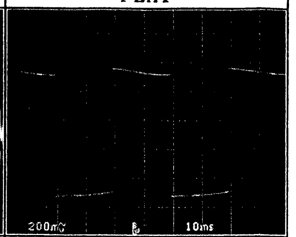

TEST POINT	TP701	TP702	TP703	TP706
VOLTS/DIV.	200mV	50mV	200mV	500mV
SEC/DIV.	20usec	20usec	20usec	10usec
MODE	PLAY	PLAY	PLAY	PLAY
WAVEFORM	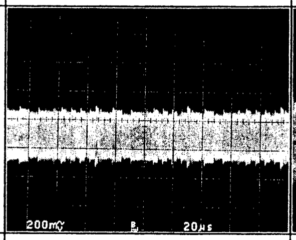	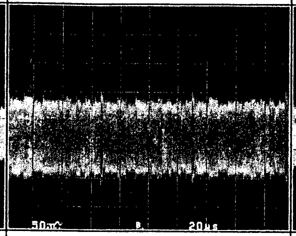	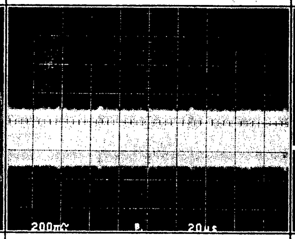	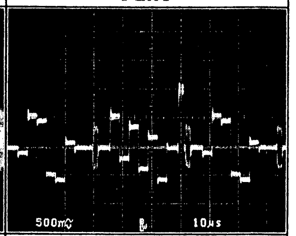

TEST POINT	TP707	TP708	TP709	TP710
VOLTS/DIV.	100mV	1V	500mV	100mV
SEC/DIV.	10usec	20usec	20usec	20usec
MODE	PLAY	PLAY	PLAY	PLAY
WAVEFORM	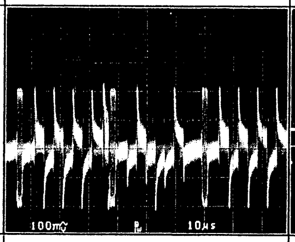	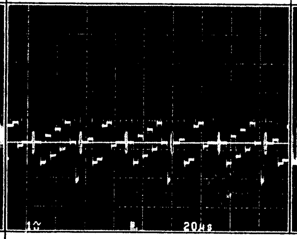	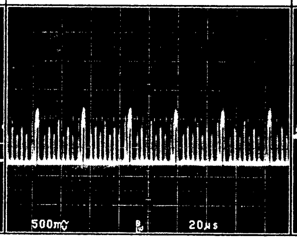	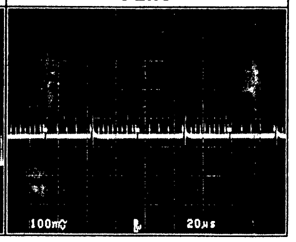

TEST POINT	TP711
VOLTS/DIV.	50mV
SEC/DIV.	20usec
MODE	PLAY
WAVEFORM	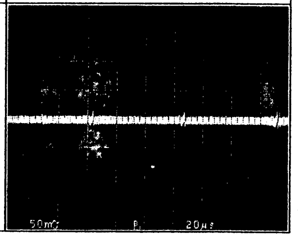

These waveforms are taken by a scope in AC mode.

W4(DECODER & CTCM) WAVEFORMS FOR PAL

TEST POINT	TP3	TP202	TP203	TP204
VOLTS/DIV.	500mV	500mV	100mV	50mV
SEC/DIV.	20usec	20usec	20usec	20usec
MODE	REC	REC	REC	REC
WAVEFORM	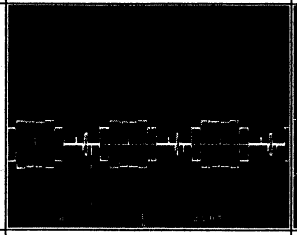	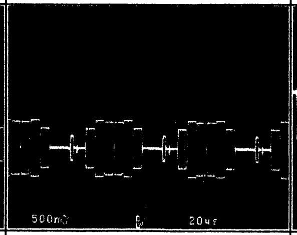	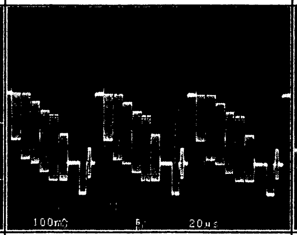	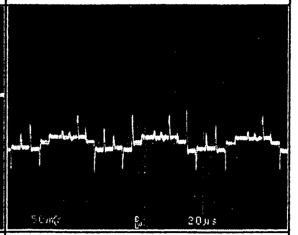

TEST POINT	TP205	TP206	TP401	TP402
VOLTS/DIV.	200mV	200mV	2V	2V
SEC/DIV.	20usec	20usec	10msec	10msec
MODE	REC	REC	REC	REC
WAVEFORM	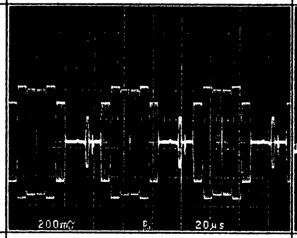	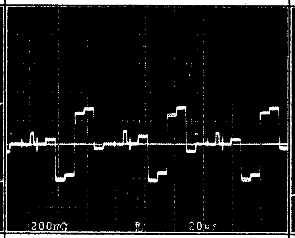	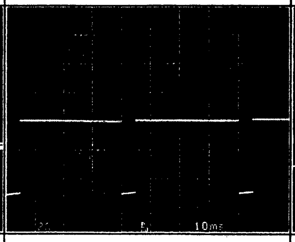	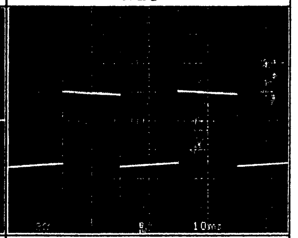

TEST POINT	TP403	TP501	TP502	TP504
VOLTS/DIV.	2V	100mV	200mV	200mV
SEC/DIV.	20msec	20usec	20usec	20usec
MODE	REC	REC	REC	REC
WAVEFORM	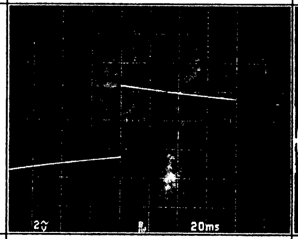	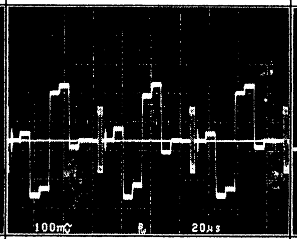	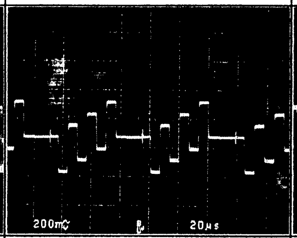	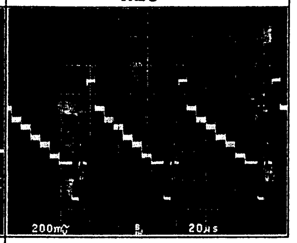

TEST POINT	TP601	TP703	TP704
VOLTS/DIV.	200mV	2V	2V
SEC/DIV.	20usec	20usec	1usec
MODE	REC	REC	REC
WAVEFORM	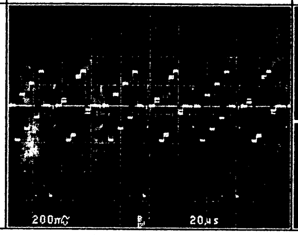	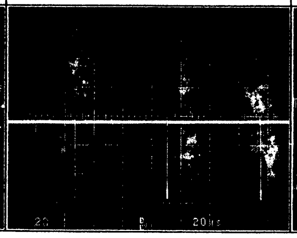	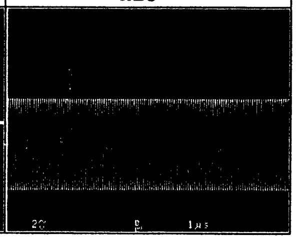

These waveforms are taken by a scope in AC mode.

W5(SERVO) WAVEFORMS FOR PAL

TEST POINT	TP3	TP4	TP5	TP6
VOLTS/DIV.	5V	5V	5V	5V
SEC/DIV.	10msec	10msec	10msec	10msec
MODE	PLAY	PLAY	PLAY	PLAY
WAVEFORM	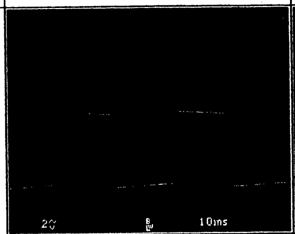	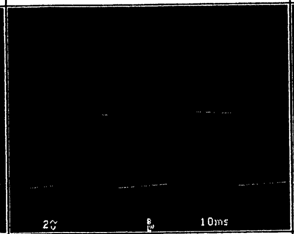	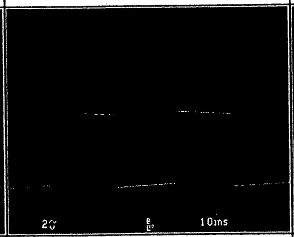	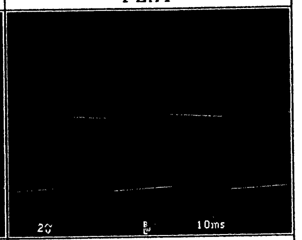
TEST POINT	TP7	TP13	TP15	TP17
VOLTS/DIV.	2V	2V	2V	2V
SEC/DIV.	10msec	20usec	10msec	10msec
MODE	PLAY	PLAY	PLAY	PLAY
WAVEFORM	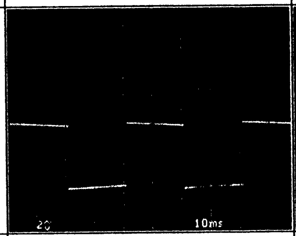	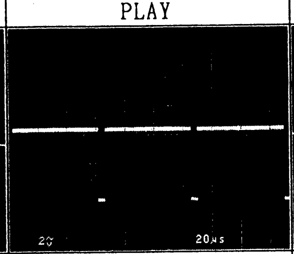	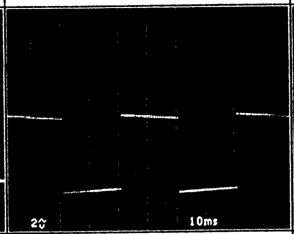	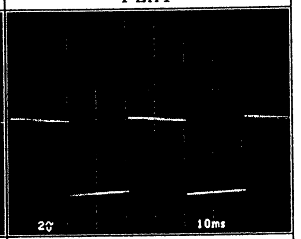
TEST POINT	TP102	TP103	TP104	TP105
VOLTS/DIV.	2V	2V	2V	2V
SEC/DIV.	20msec	500nsec	100usec	10msec
MODE	PLAY	PLAY	PLAY	PLAY
WAVEFORM	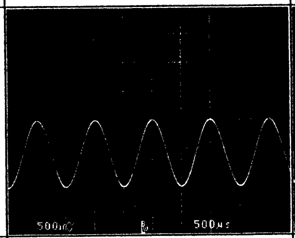	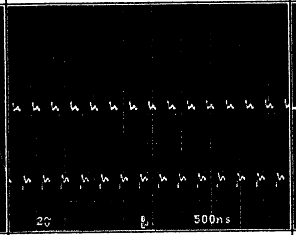	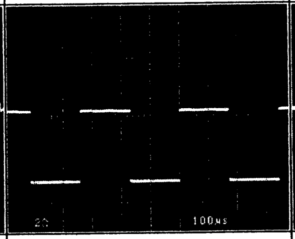	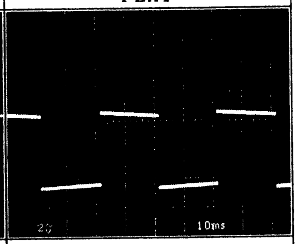
TEST POINT	TP109	TP110	TP111	TP114
VOLTS/DIV.	1V	2V	2V	2V
SEC/DIV.	5msec	10msec	50usec	200usec
MODE	PLAY	PLAY	PLAY	PLAY
WAVEFORM	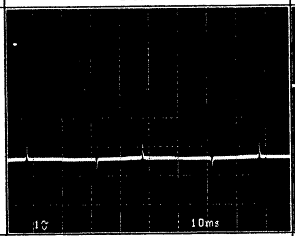	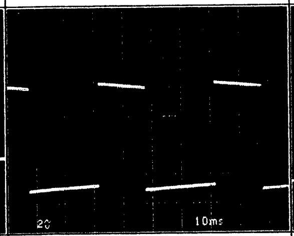	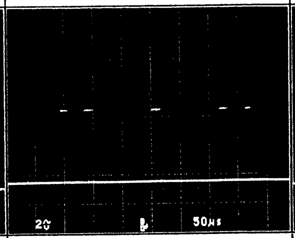	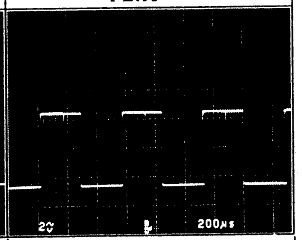
TEST POINT	TP115	TP118	TP201	TP202
VOLTS/DIV.	2V	2V	2V	2V
SEC/DIV.	200usec	20msec	2msec	2msec
MODE	PLAY	PLAY	PLAY	PLAY
WAVEFORM	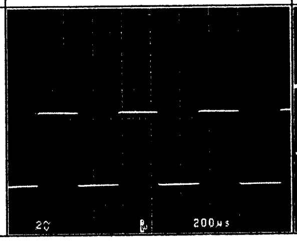	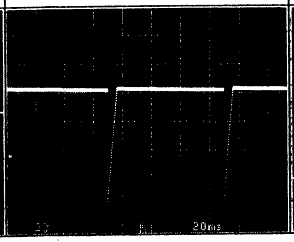	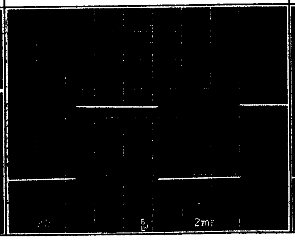	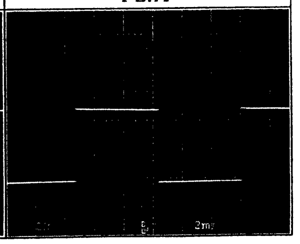

These waveforms are taken by a scope in AC mode.

W6(AUDIO) WAVEFORMS FOR PAL

TEST POINT	TP1	TP101	TP102	TP201
VOLTS/DIV.	100mV	500mV	500mV	200mV
SEC/DIV.	10msec	500usec	500usec	500usec
MODE	PLAY	PLAY	PLAY	REC
WAVEFORM	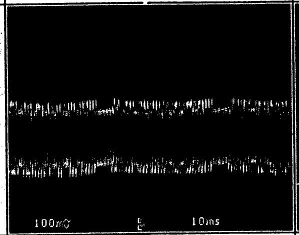	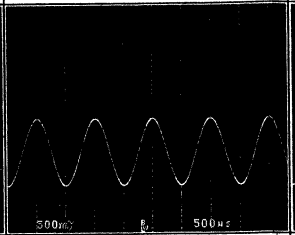	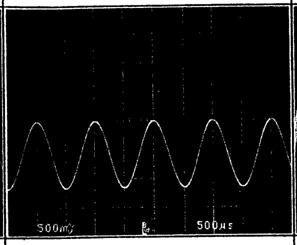	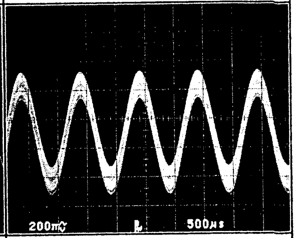
TEST POINT	TP301	TP302	TP401	TP551
VOLTS/DIV.	500mV	500mV	200mV	200mV
SEC/DIV.	500usec	500usec	500usec	5usec
MODE	PLAY	PLAY REC	REC	REC
WAVEFORM	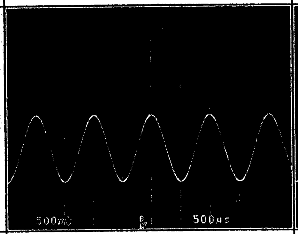	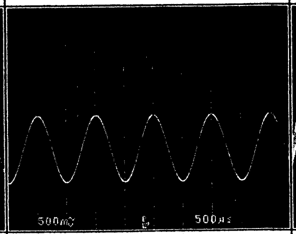	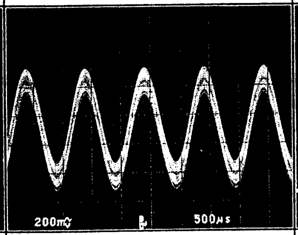	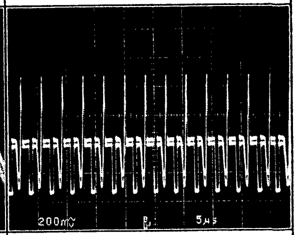
TEST POINT	TP552	TP553	TP554	TP555
VOLTS/DIV.	200mV	200mV	200mV	200mV
SEC/DIV.	5usec	5usec	5usec	5usec
MODE	REC	REC	REC	REC
WAVEFORM	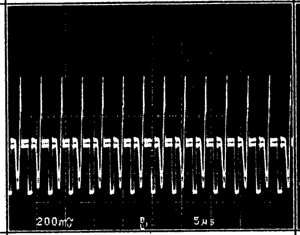	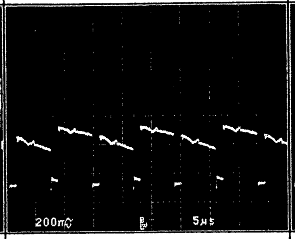	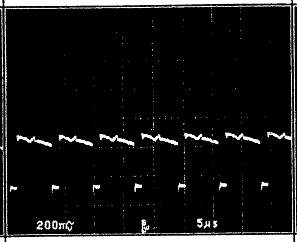	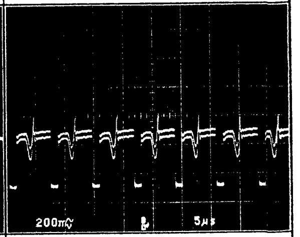
TEST POINT	TP556	TP557	TP558	TP601
VOLTS/DIV.	200mV	200mV	200mV	50mV
SEC/DIV.	5usec	5usec	5usec	20usec
MODE	REC	REC	REC	REC
WAVEFORM	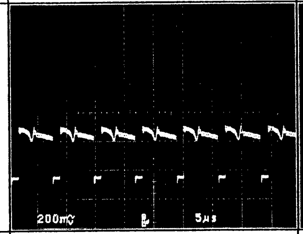	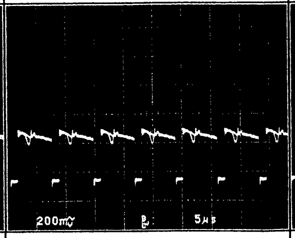	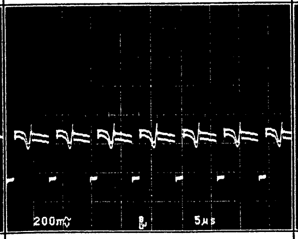	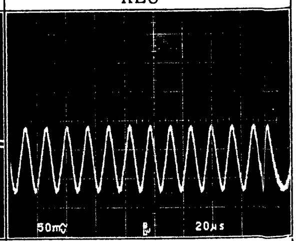
TEST POINT	TP602	TP603	TP604	TP605
VOLTS/DIV.	200mV	50mV	200mV	50mV
SEC/DIV.	20usec	20usec	20usec	20usec
MODE	REC	REC	REC	REC
WAVEFORM	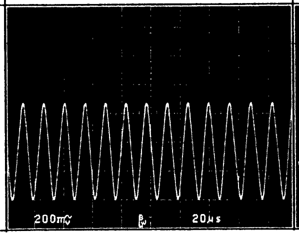	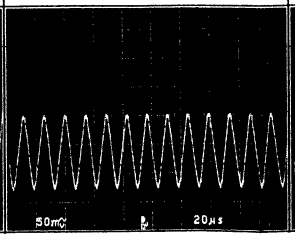	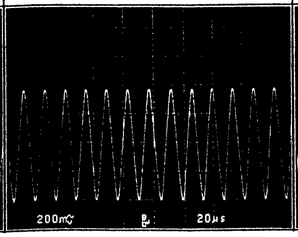	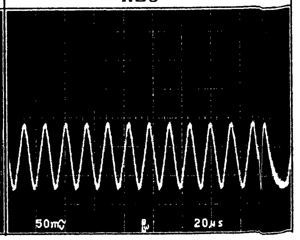

TEST P
VOLTS/
SEC/D
MOD
WAVEF
TEST P
VOLTS/
SEC/D
MOD
WAVEF
TEST P
VOLTS/
SEC/
MOD
WAVE

These wa

W6(AUDIO) WAVEFORMS FOR PAL

TP6
5V
10msec
PLAY
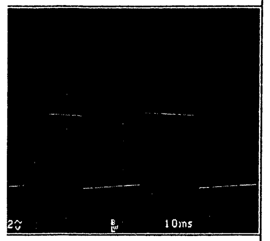
TP17
2V
10msec
PLAY
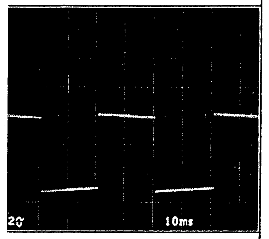
TP105
2V
10msec
PLAY
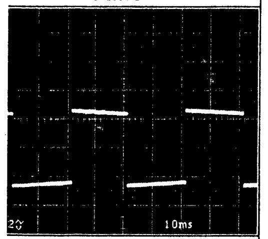
TP114
2V
200usec
PLAY
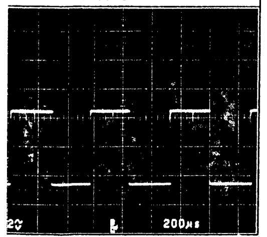
TP202
2V
2msec
PLAY
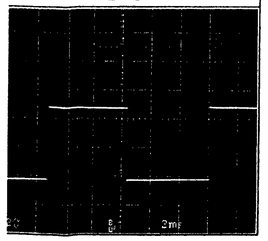

TEST POINT	TP1	TP101	TP102	TP201
VOLTS/DIV.	100mV	500mV	500mV	200mV
SEC/DIV.	10msec	500usec	500usec	500usec
MODE	PLAY	PLAY	PLAY	REC
WAVEFORM	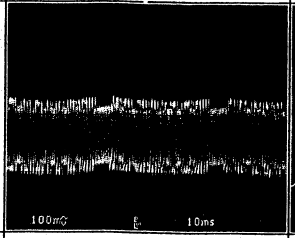	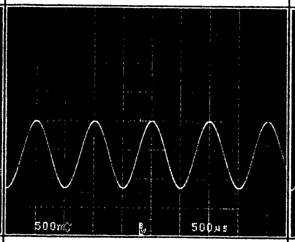	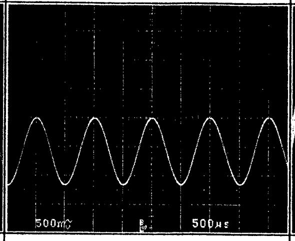	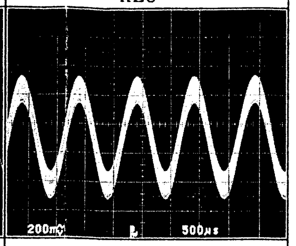

TEST POINT	TP301	TP302	TP401	TP551
VOLTS/DIV.	500mV	500mV	200mV	200mV
SEC/DIV.	500usec	500usec	500usec	5usec
MODE	PLAY	PLAY REC	REC	REC
WAVEFORM	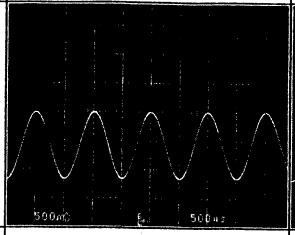	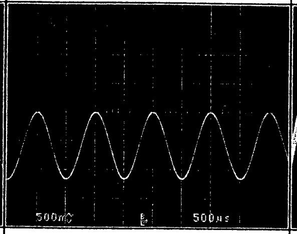	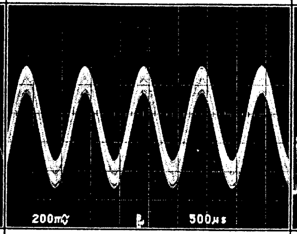	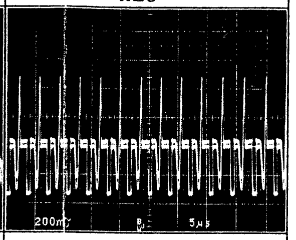

TEST POINT	TP552	TP553	TP554	TP555
VOLTS/DIV.	200mV	200mV	200mV	200mV
SEC/DIV.	5usec	5usec	5usec	5usec
MODE	REC	REC	REC	REC
WAVEFORM	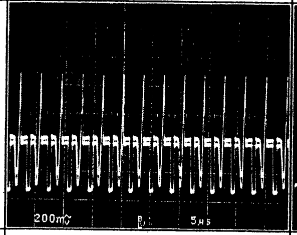	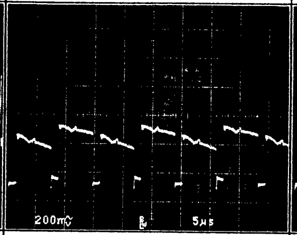	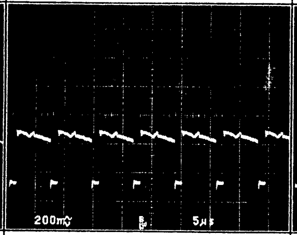	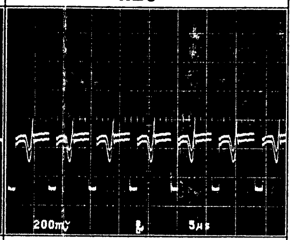

TEST POINT	TP556	TP557	TP558	TP601
VOLTS/DIV.	200mV	200mV	200mV	50mV
SEC/DIV.	5usec	5usec	5usec	20usec
MODE	REC	REC	REC	REC
WAVEFORM	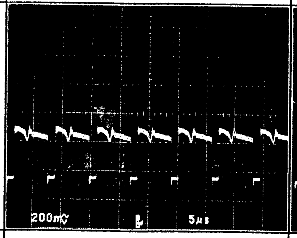	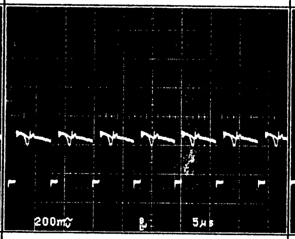	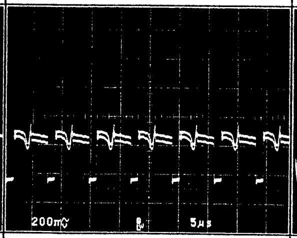	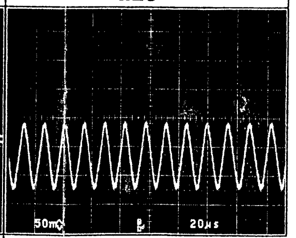

TEST POINT	TP602	TP603	TP604	TP605
VOLTS/DIV.	200mV	50mV	200mV	50mV
SEC/DIV.	20usec	20usec	20usec	20usec
MODE	REC	REC	REC	REC
WAVEFORM	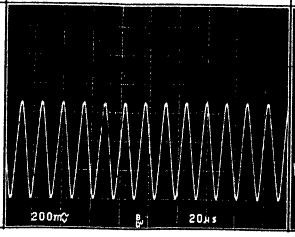	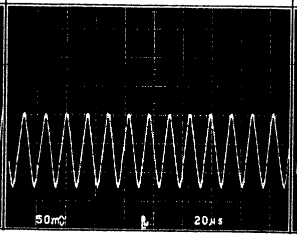	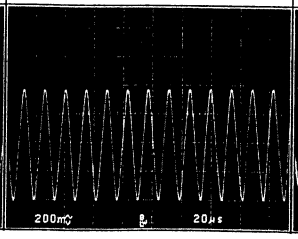	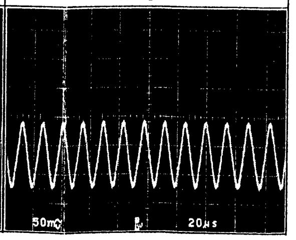

TEST POINT	TP606	TP607	TP608	TP6
VOLTS/DIV.	200mV	50mV	200mV	200
SEC/DIV.	20usec	20usec	20usec	20u
MODE	REC	REC	REC	RE
WAVEFORM	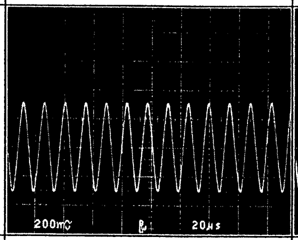	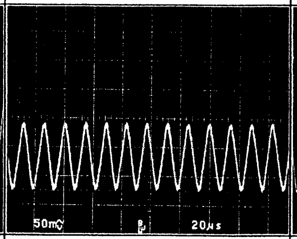	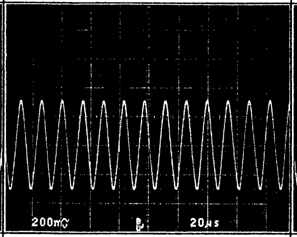	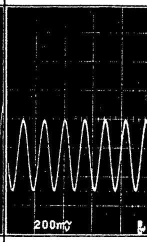

TEST POINT	TP702	TP703	TP704	TP8
VOLTS/DIV.	200mV	50mV	200mV	200
SEC/DIV.	500usec	10msec	20usec	500u
MODE	REC	PLAY	REC	RE
WAVEFORM	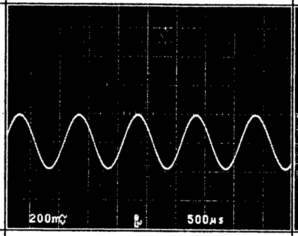	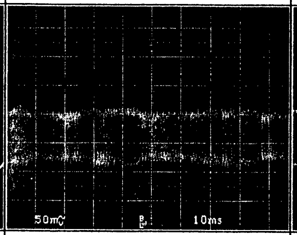	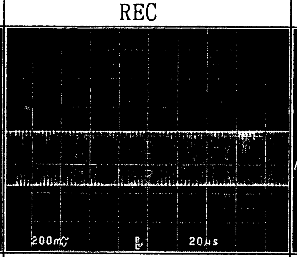	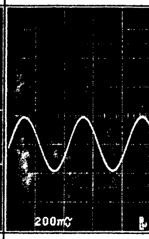

TEST POINT	TP803	TP804	TP901
VOLTS/DIV.	50mV	200mV	2V
SEC/DIV.	10msec	20usec	5msec
MODE	PLAY	REC	PLAY
WAVEFORM	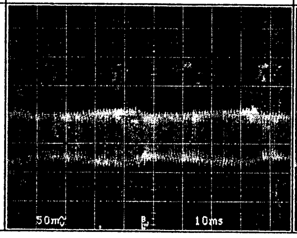	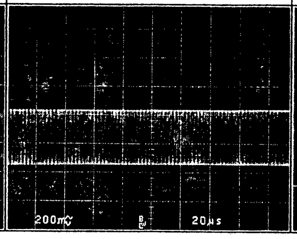	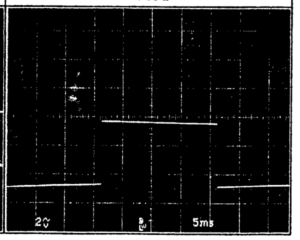

These waveforms are taken by a scope in AC mode.

B2(TC & BB) WAVEFORMS FOR PAL

TEST POINT	TP1	TP2	TP3	TP4
VOLTS/DIV.	2V	2V	500mV	2mV
SEC/DIV.	5usec	5usec	200usec	200usec
MODE	PLAY	PLAY	PLAY	PLAY
WAVEFORM	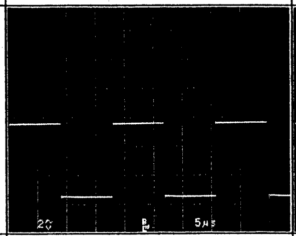	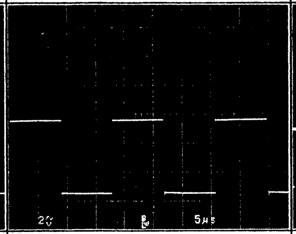	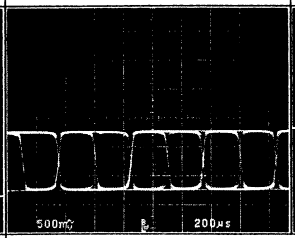	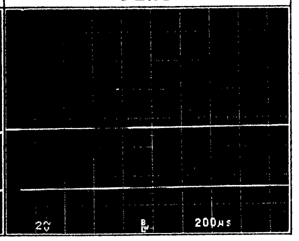
TEST POINT	TP5	TP6		
VOLTS/DIV.	2V	2V		
SEC/DIV.	20usec	1msec		
MODE	PLAY	PLAY		
WAVEFORM	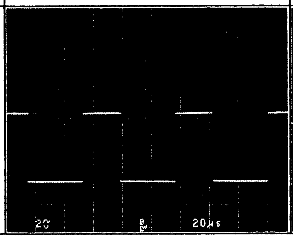	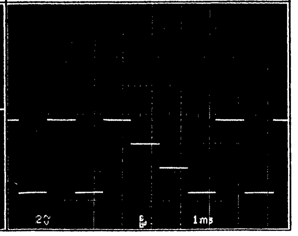		

These waveforms are taken by a scope in AC mode.

RA & HA WAVEFORMS FOR PAL

TEST POINT	TP1	TP2	TP3	TP4
VOLTS/DIV.	20mV	20mV	20mV	20mV
SEC/DIV.	5usec	5usec	5usec	5usec
MODE	PLAY	PLAY	PLAY	PLAY
WAVEFORM	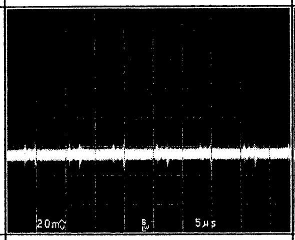	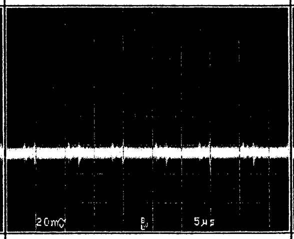	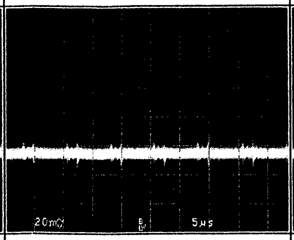	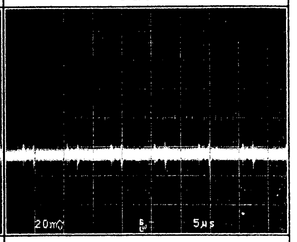
TEST POINT	TP5	TP6	TP7	TP201
VOLTS/DIV.	20mV	20mV	20mV	20mV
SEC/DIV.	5usec	5usec	5usec	5usec
MODE	PLAY	PLAY	PLAY REC	PLAY REC
WAVEFORM	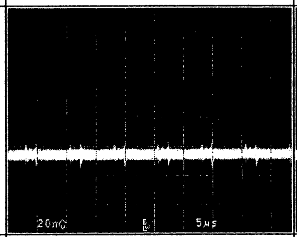	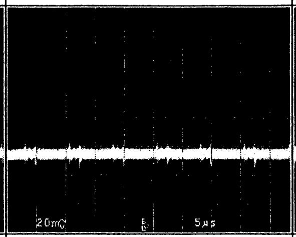	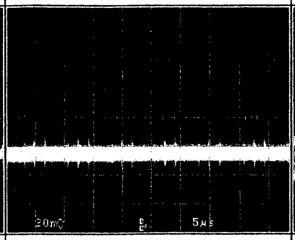	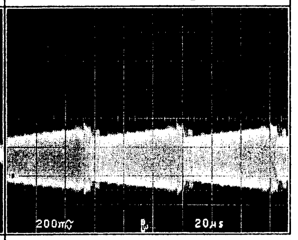
TEST POINT	TP202	TP203	TP204	
VOLTS/DIV.	200mV	200mV	200mV	
SEC/DIV.	20usec	20usec	20usec	
MODE	PLAY	PLAY	PLAY	
WAVEFORM	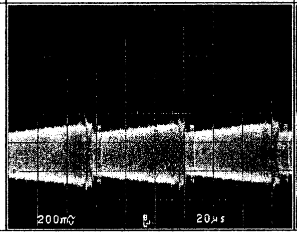	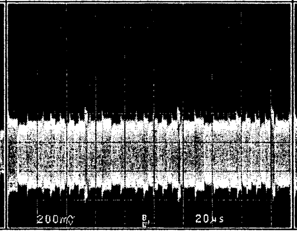	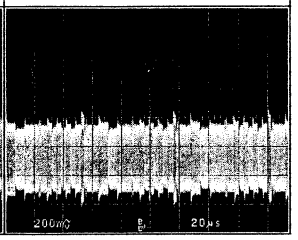	

These waveforms are taken by a scope in AC mode.

RA & HA WAVEFORMS FOR PAL

TEST POINT	TP1	TP2	TP3	TP4
VOLTS/DIV.	20mV	20mV	20mV	20mV
SEC/DIV.	5usec	5usec	5usec	5usec
MODE	PLAY	PLAY	PLAY	PLAY
WAVEFORM	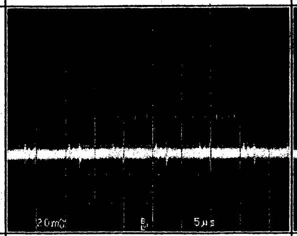	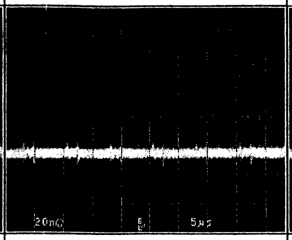	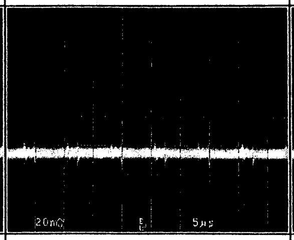	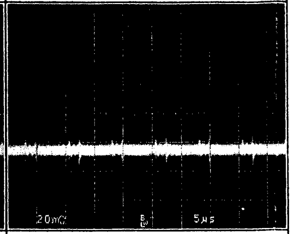

TEST POINT	TP5	TP6	TP7	TP201
VOLTS/DIV.	20mV	20mV	20mV	20mV
SEC/DIV.	5usec	5usec	5usec	5usec
MODE	PLAY	PLAY	PLAY REC	PLAY REC
WAVEFORM	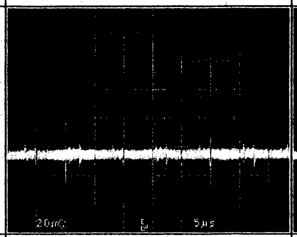	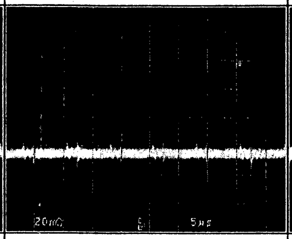	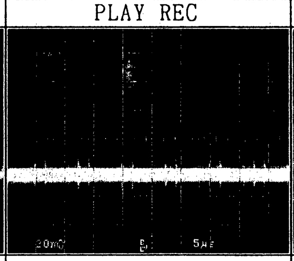	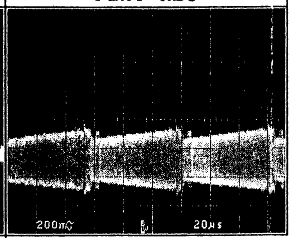

TEST POINT	TP202	TP203	TP204
VOLTS/DIV.	200mV	200mV	200mV
SEC/DIV.	20usec	20usec	20usec
MODE	PLAY	PLAY	PLAY
WAVEFORM	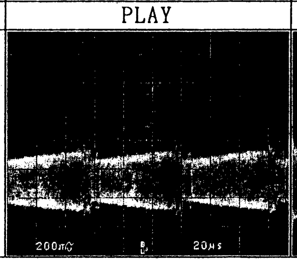	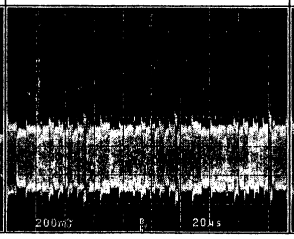	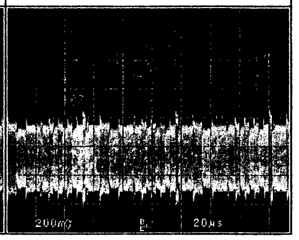

These waveforms are taken by a scope in AC mode.